Funding Opportunity Announcement R12SF80049

WaterSMART: Water and Energy Efficiency Grants

Dodge Crossing Automation Project

Natomas Central Mutual Water Company
2601 West Elkhorn Blvd.
Rio Linda, CA 95673

Dee Swearingen, General Manager
dswearingen@natomaswater.com
(916) 419-5936
(916) 419-8691 (fax)

January 19, 2012

TABLE OF CONTENTS

SF424 i
SF424B ii
TITLE PAGE iv
TABLE OF CONTENTS v
TECHNICAL PROPOSAL AND EVALUATION CRITERIA: 1
I. EXECUTIVE SUMMARY 1
II. BACKGROUND DATA 2
III. TECHNICAL PROJECT DESCRIPTION 4
IV. EVALUATION CRITERIA 8
Criterion A – Water Conservation 8
Subcriterion A.1 – Water Conservation 8
Subcriterion A.2 – Percentage of Total Supply 12
Subcriterion A.3 – Reasonableness of Costs 13
Criterion B – Energy-Water Nexus 13
Subcriterion B.1 – Implementing Renewable Energy Projects Related to Water Management and Delivery 13
Subcriterion B.2 – Increasing Energy Efficiency in Water Management 13
Criterion C – Benefits To Endangered Species 14
Criterion D – Water Marketing 15
Criterion E – Other Contributions To Water Supply Sustainability 15
Criterion F – Implementation And Results 16
Subcriterion F.1 – Project Planning 16
Subcriterion F.2 – Readiness to Proceed 17
Subcriterion F.3 – Performance Measures 18
Criterion G – Connection To Reclamation Project Activities 19
ENVIRONMENTAL COMPLIANCE 19
REQUIRED PERMITS AND APPROVALS 21
FUNDING PLAN AND LETERS OF COMMITMENT 21
OFFICIAL RESOLUTION 22
BUDGET PROPOSAL 22

APPENDICES
A Company Service Area Map and Natomas Basin Conservancy Map
B Excerpts from the Sacramento Valley Integrated Regional Water Management Plan
C Table of Annual Diversions
D Support Documentation for Dodge Crossing
E Employee Fringe Benefits

TECHNICAL PROPOSAL AND EVALUATION CRITERIA:

I. EXECUTIVE SUMMARY

Project: Dodge Crossing Automation Project

Date: January 19, 2012

Applicant: Natomas Central Mutual Water Company

Rio Linda, Sacramento and Sutter County, CA

PROJECT FUNDING

FUNDING SOURCE	FUNDING AMOUNT
Non-Federal Entities:	
Natomas Central Mutual Water Company	
In-Kind Contribution	$18,900
Cash Contribution	$221,400
Non-Federal Subtotal:	$240,300
Reclamation Funding:	$240,000
TOTAL PROJECT FUNDING:	$480,300

PROJECT SUMMARY

Natomas Central Mutual Water Company (Company) plans to provide automation improvements to the Dodge Crossing control structure. Dodge Crossing currently consists of two (2) manually operated 6-ft square slide gates located immediately downstream of the intake to the Chappell West Pump Station. The pump station houses three pumps: a 25 hp, 35 hp and 40 hp. Significant fluctuations occur in upstream water level as a result of the fixed pump speed operations. The automation improvements include:

- Removal of the two manual slide gates and the installation of a hydraulically balanced upstream level control gate to maintain consistent water levels, minimizing system spills due to pump operations.
- Installation of flow meters and SCADA at the Chappell West Pump Station to call for more/less water at the upstream control structure (Barnes Crossing) to improve system response time and minimize fluctuations in supply flow downstream of Dodge Crossing.

The primary benefits of this project are quantifiable water savings as a result of reduced system spills; improve water management through SCADA automation; and a reduction in energy consumption to capture spilled water.

II. BACKGROUND DATA

A map of the Company's service area is provided in Appendix A showing the approximate location of Dodge Crossing and Chappell West Pump Station, along with major features within the basin.

Water Supply and Water Rights:

The Company receives its irrigation supply from the Sacramento River, the Natomas Cross Canal (a tributary of the Sacramento River) and through an extensive tailwater recovery system.

The Company has a U.S. Bureau of Reclamation Settlement Contract for an annual water supply of 120,200 acre-feet made up of 98,200 acre-feet of base supply and 22,000 acre-feet of "Project" supply allocated by the Bureau of Reclamation. The actual amount of Sacramento River water used varies annually depending on farming practices and weather conditions.

Current Water Uses: Major Crops and Total Acreage Served:

Agricultural production is the primary use of water. Rice is the primary crop grown within the Natomas Basin. The two additional main crops grown are alfalfa and wheat. Other row crops and low water demand crops are grown within the vicinity of the Sacramento International Airport. The Company's service area is approximately 50,000 acres within the 200 square-mile basin. Currently there are approximately 24,000 irrigatable acres. The majority of the fields use flood irrigation methods, either wide border checks or furrows.

Water is also supplied to mitigated marshes and other environmental mitigation properties owned and maintained by the Natomas Basin Conservancy as a result of development within the Natomas Basin. A map of Natomas Basin Conservancy property is provided in Appendix A.

The average annual diversion over the past 5 years is 53,000 acre-feet. The Company captures approximately 37,700 acre-ft of tailwater annually and blends with the river diversions to meet the total demand. The actual amount served varies by year depending on hydrologic conditions and farming practices.

Description of Water Delivery System:

The water supply facilities consist of five river pumping plants from the Sacramento River and the Natomas Cross Canal, a tributary to the Sacramento River. There are a total of approximately 100 miles of canals and laterals. Water is applied directly to fields through gated turnouts in the irrigation canals.

The Company is currently constructing a new diversion on the Sacramento River. This new diversion will replace their two existing diversions on the Natomas Cross Canal to improve fisheries habitat. The new diversion will be connected to the head of the existing two systems with a new supply canal.

The Company operates a tail water recovery system within the basin during the irrigation season through existing joint use agreements with Reclamation District 1000 (RD1000) which allow the Company to operate and maintain the drainage canal system during the irrigation season (April 1 to October 30). Utilizing check structures and lift pumps in the drainage canal system, the Company re-circulates run off from fields (tail water) and pumps the tail water back into the irrigation canals. This operation annually captures approximately 37,700 acre-feet, a majority of the run-off that would otherwise be pumped back into the Sacramento River by RD1000, thereby reducing the amount of water diverted from the Sacramento River.

The five river pump stations and a few of the drainage canal lift pumps are equipped with variable speed drives to maintain a consistent discharge water level. The remaining pumps, gates and check structures are operated manually by field personnel.

Past Working Relationship with Reclamation:

The project is connected to Reclamation Central Valley Project activities as the Company is a Reclamation Settlement Contractor.

In coordination with the Anadromous Fish Screen Program, the Company is currently constructing a new Sacramento River Diversion to consolidate and remove their two diversions on the Natomas Cross Canal. Reclamation is cost sharing on this project with CVPIA funds through Grant Agreement R09AP20008. The project is currently scheduled to be commissioned in the fall of 2012.

The Company began a phased SCADA implementation in 2008. The first phase was to establish water level monitoring at key locations throughout the service area. This work was cost shared by Reclamation through CALFED Water Use Efficiency Grant 07SF200084 and two Water Conservation Field Services Program Grants 08FG200097 and R09AP20041. This work was completed in December 2010.

The second phase of the SCADA program is to install flow meters at key SCADA sites. The Company received a funding award from Reclamation's CALFED Water use Efficiency GrantProgram in 2011 to install flow meters at the 30's Pump Station, and a second funding award from Reclamation's Water Conservation Field Services Program to install flow meters at the Pullman Pumping Plant.

The Company received two additional funding awards in 2011 to provide automation improvements for two projects. The first award from Reclamation's WaterSMART: Water and Energy Efficiency Program provided assistance with the replacement of two diesel pump drivers with electric motors and installation of flow meters at the Bennett Drain Pump and the County Line Check and Lift Pump. The second award Reclamation's CALFED Water Use Efficiency Program provided assistance with automation improvements to Barnes Crossing Control Structure.

III. TECHNICAL PROJECT DESCRIPTION

Objective

The objective of this project is to eliminate operational spills that result from pumping operations at the Chappell West Pump Station. This objective will be achieved by providing automation improvements to the Dodge Crossing control structure, along with Phase 1 and Phase 2 SCADA improvements at the Chappell West Pump Station. The Project is presented in Figure 1, on the following page.

Existing Infrastructure and Operating Conditions

Chappell West Pump Station lifts water out of the Northern Main Canal on the west side of Highway 99 into the Chappell system located east of Highway 99. The pump station consists of one 25 HP, one 35 HP and one 40 HP fixed speed pumps operating on water level probes in the Chappell Ditch. The intake to the pump station is a concrete box culvert that crosses underneath Highway 99. As the pumps cycle on and off, the demand in the Northern Main Canal instantly changes and creates significant fluctuations in the operating water level.

Dodge Crossing is located at a 90-degree bend in the Northern Main Canal where the intake to the Chappell West Pump Station intake draws water from the canal. In order to establish an operational water level in the Northern Main Canal that provides favorable hydraulic conditions for the intake to the Chappell West Pump Station, two slide gates are mounted on the headwall of a double barrel 6-ft x 6-ft concrete box culvert. Electrical service is not readily available on the west side of Hwy 99. Therefore, the slide gates are manually operated and set to provide a conservative operational water level.

Barnes Crossing control structure is located approximately 5,700 feet upstream of Dodge Crossing. The automation project at Barnes Crossing (to be installed in 2012) will provide the infrastructure to maintain constant supply downstream of the control structure. The natural response time between Dodge Crossing and Barnes Crossing is about 1 hour. Therefore it would take about 1 ½ to 2 hours for the change in demand from the Chappell West pumps to be observed at Barnes Crossing and the responding change in supply to reach Dodge Crossing.

Sawtell Spill is a flashboard riser located about halfway between Barnes Crossing and Dodge Crossing. Operational spills occur when the water level rises as a result of the pump(s) at Chappell West Pump Station turning off. Ditch tenders typically establish a higher operating water level to insure reliability of the Chappell West Pump Station supply. The trade off for improving reliability is an increase in the quantity water spilled.

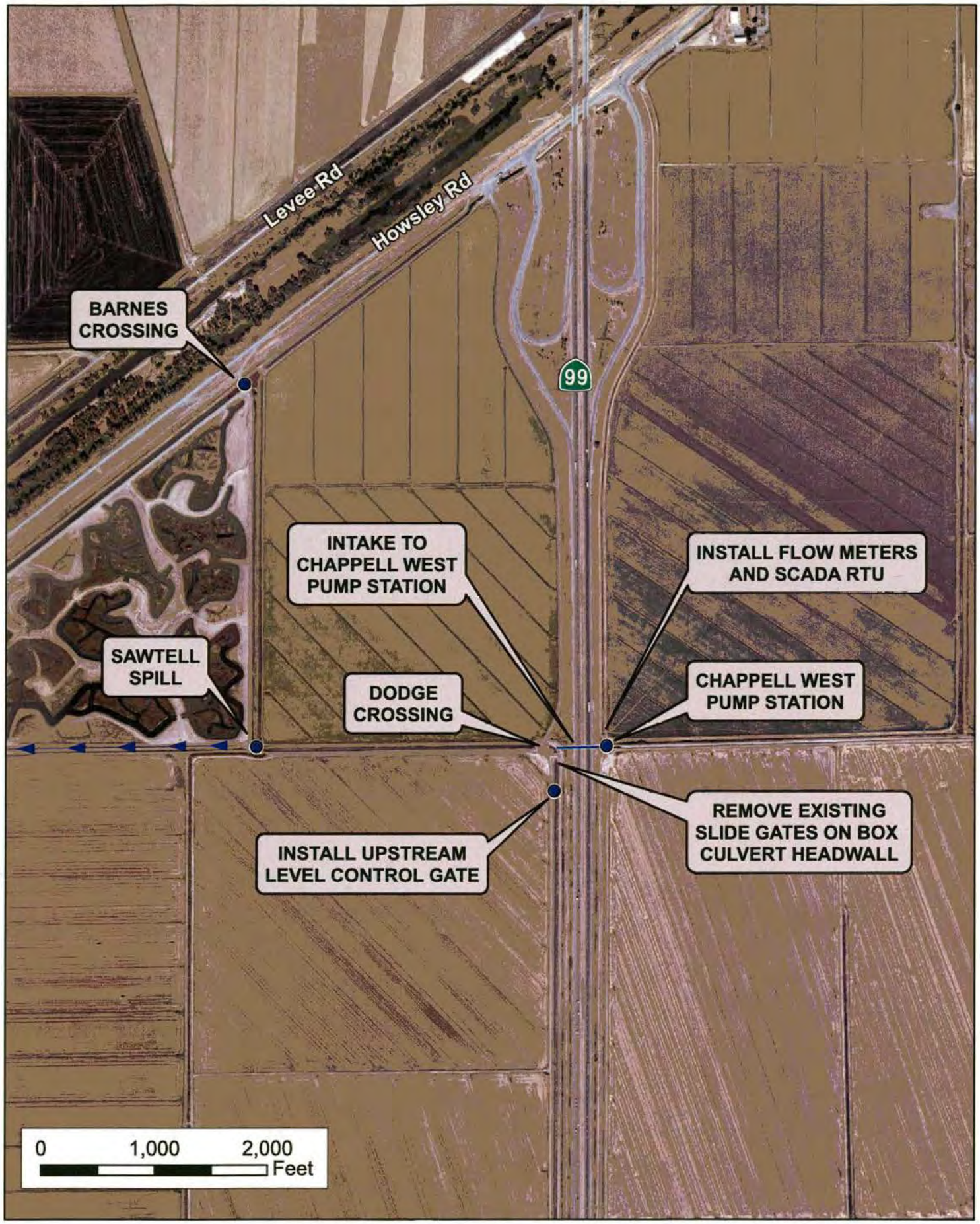

NATOMAS MUTUAL WATER COMPANY

Dodge Crossing Automation Project

Figure 1

Proposed Automation Improvements at Dodge Crossing

To minimize fluctuating water levels in the Northern Main, the manual slide gates will be removed and an upstream level control gate will be installed downstream of the box culvert. These types of gates are hydraulically/mechanically balance and do not require a new electrical service. A preliminary selection for the purpose of preparing this grant application is a Golden Harvest US-139 (See Appendix D for further information on the gate). A new concrete structure will be constructed to house the gate. This structure could be an extension to the double barrel 6-ft x 6-ft box culvert, however there could be negative hydraulic impacts to capacity and/or response caused by the flow through the box culvert. Therefore, for the purpose of this grant application, we have assumed that a separate structure will be constructed sufficiently downstream to eliminate these hydraulic impacts.

The upstream level control gate will stabilize the operational level by releasing more water when there is excess supply caused by the Chappell West pumps turning off. Similarly, the gate will release less water when the Chappell West pumps turn on and demand exceeds the supply in the canal.

A small SCADA RTU will be installed at Dodge Crossing with a solar power supply and radio to communicate with the full SCADA station at the Chappell West Pump Station. Water level sensors will be installed upstream and downstream of the gate to record system performance for refining the upstream level setting. The head differential across the gate can be used to estimate the flow being released through the gate.

Proposed Automation Improvements at Chappell West Pump Station

The upstream water level control gate at Dodge Crossing will minimize water level fluctuation by automatically adjusting the gate position to pass more or less flow downstream. This gate will not address the problem of fluctuating canal flow resulting from changes in demand and the delay in supply response.

To dampen the fluctuation in canal flow, a full SCADA station will be installed at the Chappell West Pump Station. In addition to water level sensors in the sump and discharge canal, flow meters will be installed on each pump discharge pipe. There is sufficient length of pipe to install MACE full penetration doppler flow meters, which are a cost effective alternative to magnetic meters. This Chappell West Pump Station SCADA station will communicate directly with the Barnes Crossing SCADA station, relaying total flow through the pump station. When a change in flow is relayed to Barnes Crossing, the automated slide gates will adjust to match the demand at Dodge Crossing. This direct communication will cut the response time in about half and dampen flow fluctuations downstream of Dodge Crossing.

Execution of Work

The following scope of the work will be executed to be complete the implementation of the Dodge Crossing Automation Project:

Task 1 – Administration

This task includes periodic reporting to Reclamation and general over site of the work being performed. The work will be performed by Company staff will limited assistance from Parsons Brinckerhoff.

Task 2 – Final Design

This task includes all work to confirm the size of the upstream level control gate; complete the design of the concrete structure to house the level control gate; specify the SCADA RTU, water level sensor and flow meter equipment; and determine the RTU control logic for programming. This work will be performed by Parsons Brinckerhoff with input from Company staff, equipment vendors and controls/SCADA programmers.

Task 3 –Construction and Equipment Installation at Dodge Crossing

This task includes all site preparation and construction of the concrete structure and installation of the level control gate at Dodge Crossing. The level control gate may be procured by the Company for installation by the contractor if the lead time requires pre-purchase. The Company will solicit bids from local contractors and select the contractor with the most competitive qualified bid. This work will begin in January/February 2013, depending on weather conditions, to be completed by March 31, 2013.

Task 4 – Controls and Programming

This task includes all work to install the SCADA stations at Dodge Crossing and Chappell West Pump Station. At each SCADA station, Tesco Controls (TESCO), the Company's system integrator, will install the RTU, radio antenna, water level sensors and flow meters. Company staff will construct any infrastructure required, including foundation pads, conduit runs and stilling basins. Concepts in Controls will supply the MACE flow meters and assist with installation, calibration and SCADA integration. TESCO will develop and deploy the control programming for the facility based on the control scheme developed in Task 2. This work is to be coordinated with the construction activities and be completed by March 2013.

Task 5 – Startup Testing

This task includes the anticipated efforts of the contractor, equipment vendors and TESCO to perform startup testing, troubleshooting and final adjustments to the equipment and controls programming. The facility is to be fully operational prior to the beginning of the irrigation season, typically between April 15th and May 1st.

Task 6 – Performance Monitoring and Reporting

This task includes the effort required by Company staff to meet the grant reporting requirements and to maintain operation records during the 2012 and 2013 irrigation season to support the performance evaluation. Company staff, with the assistance of Parsons Brinckerhoff will prepare the performance evaluation report for the 2013 irrigation season based on the performance measures identified below.

IV. EVALUATION CRITERIA

Criterion A – Water Conservation

Subcriterion A.1 – Water Conservation

Subcriterion A.1(a) – Quantifiable Water Savings

The Company's average annual water supply (river diversions and tailwater recovery) over the past 5 years is 90,700 acre-ft, of which an average of 18,000 acre-ft is diverted at the Northern Pumping Plant. The field demand between the Northern Pumping Plant and Dodge crossing is very small in comparison to the demand of the Chappell West Pump Station and demand downstream of Dodge Crossing. Therefore, the annual quantity of water run through Dodge Crossing is approximately 16,000 to 17,000 acre-ft.

The water spilled at Sawtell returns to the upper tailwater pool in the drainage canal system. Most of the tailwater is recovered and pumped back into the irrigation canals at multiple locations. However, the tailwater recovery system is not completely closed and the excess drain water is pumped back into the Sacramento River by Reclamation District 1000. Therefore, every reduction in operation spills results in less unrecoverable tailwater and ultimately less demand for diversions from the Sacramento River.

The amount of water saved is a result of two attributes of the project that reduce operational spills in the Northern Main canal at the Sawtell:

- Water level automation in the Northern Main at Dodge Crossing
- Improved automated system response by installing flow meters at the Chappell West Pump Station integrated with SCADA automation at Barnes Crossing.

The water conserved by stabilizing the water level and reducing the operation spill will pass through Dodge Crossing to serve downstream fields instead of contributing to excess lower quality tailwater that must be pumped out of the system back into the Sacramento River.

The system response is improved by reducing the dependency on ditch tenders to make periodic manual adjustments. Improving the system response will ultimately translate into less demand for diversion off the Sacramento River. Therefore, the conserved water resulting from improving the system response will stay in the Sacramento River and go to downstream beneficial use.

Quantifying the Water Savings

The water level in the Northern Main has been observed to consistently spill approximately 2 inches over the top of the flashboard riser, with increases up to 4 inches over the flashboards as a result of pumping operations at Chappell West Pump Station. The annual volume of water currently spilled at Sawtell is estimated to be 455 AF, based on the following assumptions:

- Base spill:

$$Q = 3.33 \times (4\,ft) \times \left(\frac{2''}{12}\right)^{1.5} = 0.9\,cfs$$

$$Time\ of\ Spill = April\ 15\ through\ November\ 30 = 32\ weeks$$

$$Volume = 0.9\,cfs \times 32\,weeks \times (7 \times 24 \times 3600)/43560 \approx \underline{400\,AF\ annually}$$

- Additional spill from fluctuations due to pump operations:

$$Q = 3.33 \times (4\,ft) \times \left[\left(\frac{4''}{12}\right)^{1.5} - \left(\frac{2''}{12}\right)^{1.5}\right] = 1.65\,cfs$$

$$Frequency\ of\ Additional\ Spills \approx 4\ times\ per\ day$$

$$Duration\ of\ Additional\ Spills \approx 1\ hour\ (base\ spill\ to\ peak\ and\ back\ to\ base\ spill)$$

$$Daily\ Spill \approx 4 \times [0.5 \times 1.65\,cfs \times 1\,hour \times 3600]/43560 \approx 0.25\,AF\ per\ day$$

$$Volume \approx 0.25\,AF\ per\ day \times 32\,weeks \times 7 \approx \underline{55\,AF\ annually}$$

Utilizing the upstream level control gate at Dodge Crossing will provide a "steady" water level in the Northern Main and eliminate the need to maintain a consistent base spill at Sawtell. The flashboards will be set at the water level of this "steady" water level condition, eliminating the base spill. There will still be minor fluctuations from changes in pump operations, but these will be dampened by the upstream level control gate at Dodge Crossing. The installation of SCADA at Chappell West Pump Station and automated communications with Barnes Crossing will improve system response and dampen the fluctuation in flow. The post-project spill at Sawtell is anticipated to peak at 2 inches over the flashboards and the duration of the spill is reduced to 30 minutes.

The post-project spill at Sawtell is estimated as follows:

- Base spill: 0 AF
- Additional spill from fluctuations due to pump operations:

$$Q = 3.33 \times (4\,ft) \times \left(\frac{2''}{12}\right)^{1.5} = 0.9\,cfs$$

$$Frequency\ of\ Additional\ Spills \approx 4-8\,times\ per\ day$$

$$Duration\ of\ Additional\ Spills \approx 30\,\text{min}\ (to\ peak\ and\ back)$$

$$Daily\ Spill \approx 6 \times [0.5 \times 0.9\,cfs \times 30\,\text{min} \times 60] / 43560 \approx 0.1\,AF\ per\ day$$

$$Volume \approx 0.1\,AF\ per\ day \times 32\,weeks \times 7 \approx \underline{22\,AF\ annually}$$

Based on these estimates, **the annual water savings is approximately 430 AF**, primarily from eliminating the base spill.

To verify the actual water savings, the Company will monitor water levels at the Sawtell spill during the 2012 irrigation season to confirm the existing spill and compare to the post-project Sawtell spill following construction, currently targeted as the 2013 irrigation season.

To confirm the existing base spill, Company staff will record the water depth above the flashboards at least twice each day, except weekends. The resulting quantity of water spilled will be calculated as follows:

1. Average depth will be calculated between two readings.
2. Average flow calculated using the weir equation: $Q = 3.33LH^{1.5}$
3. The duration of spill will be the time between recordings.
4. Incremental volume spilled will be calculated as the average flow times the duration of spill.
5. Total volume spilled will be calculated as the sum of the incremental volume spill and subtotaled by month.

To confirm the existing additional spill from fluctuation due to pump operations, Company staff will closely monitor the system on a periodic basis throughout the irrigation season. Continuous monitoring of the existing system is not practical. Since the spill resulting from pump operations is only 12% of the total existing spill, periodic intensive monitoring will be performed to confirm the approximate spill. On a monthly basis, Company staff will perform an exercise to record water depth above the flashboards at 10-minute increments following a trip off of the pump at the Chappell West Pump station set on the probe. The quantity of water spilled will be calculated using the same procedures as the base spill, outlined above. An average spill per pump cycle will be calculated based on the 8 monthly exercises. The Company will install a device at the Chappell West Pump Station to record the number of pump start/stops during the 2012 season.

Post project performance will be recorded using the SCADA instrumentation installed at Dodge Crossing and Chappell West Pump Station. The post-project spill at Sawtell will be calculated using the same procedures identified above to confirm the existing base spill. The water level at Sawtell will be determined by prorating the water level elevations recorded at Barnes Crossing and Dodge Crossing. The recorded water level trends will be reviewed to confirm whether the base spill has been eliminated and determine whether additional adjustments to the flashboards and/or the upstream level gate are required.

Additional Information Related to Flow Measurement, SCADA and Automation

The flow meters to be installed at the Chappell West Pump Station are full penetration Doppler meters manufactured by MACE. The Company is installing these meters at several pump stations where limited straight runs of pipe are available. Magnetic meters are typically required in short strainght runs. However, these meters provide 1% to 5% accuracy and are far more cost effective when compared to magnetic meters.

Subcriterion A.1(b) – Improved Water Management

In addition to the quantifiable water savings, this project will provide another key automation improvement to better manage the Company's new Sacramento River diversion that is currently under construction and will be commission in November 2012. This new diversion will remove the point of diversion for Northern system Sankey Diversion on the Natomas Cross Canal, and consolidate the diversion point on the Sacramento River. Water deliveries to the Northern system will be made via a 2.5-mile canal from the new diversions to the current existing point of diversion.

Dodge Crossing will be the fourth automated control structure in series on the system. Each structure communicates with the structures immediately downstream and upstream to make flow adjustments while maintaining required reliable water supply levels in the canal.

The automation improvements provide instantaneous response to flow changes. The immediate response by the proposed improvements will a dramatic improvement over periodic manual adjustments currently made by the ditch tender. In addition, the installation of flow meters at the Chappel West Pump Station will inform the ditch tender exactly how much flow is being pumped from the Northern Main Canal, improving water management decision downstream of Dodge Crossing.

The percentage of the Company's water supply from river diversions that will be directly better managed as a result of this project is:

$$\frac{\text{Estimated Amount of Water Better Managed}}{\text{Average Annual Water Supply}} = \frac{16{,}000}{53{,}000} = 30\%$$

However, the amount of water to be better managed extends beyond the volume ran through Dodge Crossing. This project will also indirectly benefit the management of the tailwater supply pool maintained in the drainage canal system. The "upper pool" of tailwater is maintained by a system of check structures and lift pumps in the north service area. The amount of tailwater moved through the upper pool is approximately 40,000 acre-ft. Reducing operational spill at Sawtell will reduce the amount of excess drain water that is pumped out of the system into the Sacrament River.

Subcriterion A.2 – Percentage of Total Supply

The total average annual water supply provided to growers over the past 5 years is approximately 90,700 acre-ft. The total supply diverted from the Sacramento River system over the past five years is:

Annual River Diverions	
2007	64,855
2008	57,216
2009	52,775
2010	46,056
2011	44,007
Average Annual River Diversion	53,000
Average Annual Tailwater Recovery	37,700
Total Annual Water Supply	90,700

The reduction in water supply diverted from the river over the past five years is a result of combined impacts from the type of water year (dry, normal, wet) and timing of spring rains; a change in farming from rice to wheat, and improved water management and tailwater recovery resulting from implementation of the SCADA program.

The percentage of water conserved to the average diverted water supply is:

$$\frac{\text{Estimated Amount of Water Conserved}}{\text{Average Annual Diverted Water Supply}} = \frac{430}{53{,}000} = 0.8\%$$

The percentage of water conserved to the water supplied to the Northern system is:

$$\frac{\text{Estimated Amount of Water Conserved}}{\text{Average Annual Water Supply}} = \frac{430}{18{,}000} = 2.7\%$$

Subcriterion A.3 – Reasonableness of Costs

Current Project Cost: $480,300, as discussed in the budget narrative below.

Expected Life: With proper routine maintenance, this project should last 50 years before any significant rehabilitation is required. Minor replacement activities will be required to maintain electrical equipment.

Annual Acre-feet Conserved: 430 acre-feet, as discussed above in Subcriterion A.1(a)

Acre-feet Better Managed: 16,000 acre-feet, as discussed above in Subcriterion A.1(b)

$$\text{Reasonableness of Cost} = \frac{\text{Total Project Cost}}{\text{Acre} - \text{feet} \times \text{Improvement Life}}$$

$$= \frac{\$480{,}300}{(430)\times(50\text{ years})} \approx \$22 \text{ per ac - ft conserved per year}$$

$$= \frac{\$480{,}300}{(16{,}000)\times(50\text{ years})} \approx \$0.60 \text{ per ac - ft better managed per year}$$

Criterion B – Energy-Water Nexus

Subcriterion B.1 – Implementing Renewable Energy Projects Related to Water Management and Delivery

This project does not have a renewable energy component.

Subcriterion B.2 – Increasing Energy Efficiency in Water Management

The reduction in system spill will result in reduced pumping and associated energy savings by reducing the quantity of water pumped at the new diversion on the Sacramento River. Based on the technical specifications for the new diversion, the pumps are to be 400 horsepower vertical mixed flow pumps with adjustable frequency drives. The estimated total design head is 27 feet with a minimum pump efficiency of 85%. The induction motor is to have a minimum efficiency at full load of 91.5%.

Based on this data, the estimated energy savings is approximately:

Energy consumption per acre-foot:

$$= \frac{HP}{Q} \times \frac{0.746 \times 43560}{3600} = \frac{0.746 \times 43560}{3600} \times \frac{\gamma_{water} \times TDH}{550 \times e_{pump} \times e_{motor}}$$

$$= \frac{0.746 \times 43560}{3600} \times \frac{62.4 \times 27}{550 \times 0.85 \times 0.915} = 35.6 \text{ kWh per acre} - \text{ft}$$

Annual Enegery Consumption Savings:

$= 35.6 \times 430 = 15{,}300\, kWh$

Average Energy Rate :

Summer Peak : $0.16 *per kWh* (*Noon to 6PM, Mon – Fri*)

Summer Off Peak : $0.0725 *per kWh*

Average Energy Rate :$0.088 *per kWh, for continuous operation*

Annual Energy Savings :

$= 15{,}300 \times 0.088 = \$1{,}346.40$

Other Renewable Energy Components:

At Dodge Crossing, the upstream level control gate was selected because it is mechanically operated and does not require electrical power be brought to the site. The nearest source is across Highway 99 and would require an expensive crossing to bring electricity to the site. Small solar panels will be used to power the water level monitoring equipment upstream and downstream of the gate, plus power the RTU and radio to send the signal to the new SCADA station at Chappell West Pump Station.

Criterion C – Benefits To Endangered Species

The Company diverts water from the Sacramento River north of the confluence with the American River. These rivers and their tributaries provide critical habitat for protected anadromous fish species (salmon, steelhead, green sturgeon and Delta Smelt). The water conserved by this project would remain in the river, providing more fresh water downstream to improve survival rates during migration.

Within the Natomas Basin, the Company delivers water to approximately 4,000 acres of habitat preserve managed by the Natomas Basin Conservancy. These preserves provide critical foraging habitat for Swainson's Hawk and Giant Garter Snake, as well as critical habitat for several other species such as burrowing owl, tricolored blackbird and white-faced-ibis. More than half of the preserve land is located in the north end of the basin. The improvements to water management and conservation resulting from this project will also increase the reliability of water deliveries to the preserve sites, which is essential to their long-term sustainability.

Criterion D – Water Marketing

This project does not propose to directly market the water saved through conservation and better water management. However, the water savings and contribution to water supply sustainability will allow flexibility in Sacramento River diversions that would allow for water transfers to other Settlement Contractors to meet short term supply deficiencies on a year-by-year basis.

Criterion E – Other Contributions to Water Supply Sustainability

The Company also has a relationship to the California Bay-Delta in that the Company's service area diverts water from the Sacramento River north of the confluence with the American River. These rivers provide a significant source of fresh water to the California Bay-Delta. Excess drain water from the services area is pumped back into the Sacramento River by RD1000. Water conservation and improvements in water management will result in less fresh water being diverted from the Sacramento River as well as a reduction in the amount of drain water being pumped back into the river. The combination of these two effects would result in a higher quantity and quality of water being delivered to the California Bay-Delta.

This project contributes towards achieving the goals for the following CALFED Quantifiable Objectives and Targeted Benefits for Sub-Region 7, Lower Sacramento River below Verona:

TB-57: Provide flow to improve aquatic ecosystem conditions, Sac River
Quantifiable Objective: 44 to 180 TAF per year.

One possible action toward achieving the quantifiable objective is identified as a "Reduction in operational spill through improved management, canal automation or regulatory storage." This project will improve tailwater recovery by increasing recirculation by utilizing VFD controllers and by increasing water management by installing flow meters and integration in to the Company's SCADA system. Improved tailwater recovery will reduce the amount of fresh water diversions and the amount of excess drain water being pumped into the Sacramento River.

TB-60: Reduce salinity to enhance and maintain aquatic species populations, NEMDC
Quantifiable Objective: TBD.

TB-60 is targeting a reduction in electrical conductivity to allow municipal treatment facilities the flexibility to meet the potential long-term regulatory scenario. While it is unclear what that scenario is and what the quantifiable objective will be, it may involve the reduction of salt levels. Agricultural drain water tends to have a higher level of salts that are picked up from the irrigated fields. This project will improve the efficient use of drain water, thereby reducing fresh water diversions and reducing the amount of drain water being pumped back into the Sacramento River. The combined affect will improve water quality and reduce salinity.

TB-64: Provide long-term diversion flexibility to increase the water supply for beneficial uses.
Quantifiable Objective TBD

TB-64 is aimed at providing diversion flexibility to enhance conjunctive use projects by providing reducing flows to groundwater in dry years and increasing flows to groundwater in wet years. The improvement to tailwater recovery gained by this project will improve the Company's ability to manage water in dry years, providing additional water supply in the Sacramento River for conjunctive use projects downstream.

TB-65: Provide long-term diversion flexibility to increase the water supply for beneficial uses, Wetlands
Quantifiable Objective: 1 TAF per year

TB-65 is targeting improved water management to provide addition water for wetlands. Possible actions to achieve TB-65 are the same as TB-57. This project will improve tailwater recovery and reduce excess drain water pumping, as discussed above. In addition, the Company provides water to approximately 4,500 acres of Natomas Basin Conservancy mitigation property for sustained rice farming, upland habitat preservation and managed marsh lands. The operational efficiencies and water management improvements resulting from this project will improve long-term reliability of water supply to these mitigation lands.

Criterion F – Implementation and Results

Subcriterion F.1 – Project Planning

Identify District-Wide or System-Wide Plans:

The Company completed a System Optimization Review of the tailwater recovery system in March 2011, which ranked Dodge Crossing number forth among other efforts to improve tailwater recovery. All higher ranked projects have or are in the process of being implemented in 2012. The Dodge Crossing project is next in line to be implemented.

Engineering and Design Work:

The Company review several different options for automating Dodge Crossing. Automated slide gates were ruled out due to the high cost of bringing electric power to the site. A long crested weir was also evaluated with the upstream level control gate. The gate was selected for providing better flexibility to pass or retain flows in response to pumping operations at West Chappell Pump Station.

A conceptual design was then drafted to provide input for budgetary costing for the purpose of preparing this application.

Conformance to Regional Water Plans:

The proposed project is consistent with the Sacramento Valley Integrated Regional Water Management Plan (SVIRWMP). This project contributes to the "System Improvement/Water Conservation" water management strategy contained in Section 4.1.2 and subsection 4.1.2.2 of the document. These sections have been included with this proposal in Appendix B. The improvements of this project meet the key objectives of improved measurement and management outlined in subsection 4.1.2.2

Subcriterion F.2 – Readiness to Proceed

The Company is ready to implement the project as follows:

Design and Procurement Phase:

The objective of this phase is to be ready to construct prior to the Spring 2013 Irrigation Season. Following award of the grant, the Company will complete the design of the improvements to Dodge Crossing and Chappell West Pump Station. This includes designing the site layout and structure to house the gate, finalizing equipment selection, and field locating where SCADA control panels, water level sensors and flow meters are to be installed. Once complete, procurement documents will be prepared solicit costs for the upstream level control gate and any other control and/or SCADA equipment that requires a long lead time. Once the long-lead items have been ordered, the Company will begin SCADA program planning in order to be ready for construction by January 1, 2013.

Construction Phase:

The available construction window runs from January 1st through March 31st during the winter when irrigation deliveries are not required and the sites are not in operation. Some site work and selective demolition will be required to facilitate equipment installation. The bulk of the construction activities will be associated with the level control gate. Once construction is complete, TESCO will install the SCADA RTU panel to communicate with the level control gate. The site will undergo operational testing with the vendors on site to assist with any troubleshooting. Any corrections will be completed in time to bring the facility operational by April 1st.

Performance Monitoring Phase:

Dodge Crossing is planned to be operational for the 2013 irrigation season. Recorded flow data will be used to determine the quantity of water moved through each facility. A pre-project estimate will be made based on speed/run-time records for 2012 and/or 2013 irrigation seasons (depending on when the site is constructed). A comparison will be made to confirm quantity of water conserved by the project.

Estimated Project Schedule:

Pre-Project Performance Monitoring	April – December 2012
Reclamation Award/Project Start Date	October 1, 2012
Environmental Clearance	October –December 2012
Final Design	October - December, 2012
Equipment Procurement	November - December, 2012
Construction	January - March , 2013
Install Controls and Programming	March – April 2013
SCADA Integration	March - April 2013
Final Testing and Site Operational	April 2013
Post-Project Performance Evaluation	April – December 2013
Final Report	March 31, 2014

The only permits or approvals required are environmental clearances to be completed prior to beginning construction in January 2013.

Subcriterion F.3 – Performance Measures

The following performance measures will be made to quantify the benefits upon completion of the project:

1) A report will be prepared to summarize the pre- and post-project results based on the evaluations described above in Subcriterion A.1(a). Pre- and post-project conditions will be identified, describing any significant changes that would impact the results.

Criterion G – Connection To Reclamation Project Activities

How is the proposed project connected to Reclamation project activities?

The project is connected to Reclamation's CA Central Valley Project activities as the Company is a Reclamation Settlement Contractor. Any savings in water by the Company can be made available to other Settlement Contractors during dry water years.

Does the applicant receive Reclamation project water?

As a Settlement Contractor, the Company has water rights for 98,200 acre-feet of base supply and 22,000 acre-feet of contract water.

Is the project on Reclamation project lands or involving Reclamation facilities?

No.

Is the project in the same basin as Reclamation project or activity?

Yes, the Project is located in the Sacramento River Basin and within the CALFED Solution Area.

Will the proposed work contribute water to a basin where Reclamation project is located?

Yes, expected water savings will result in a higher quantity and quality of water being delivered to the California Bay-Delta, the source of water for the Central Valley Project.

ENVIRONMENTAL COMPLIANCE

The Company believes that the proposed project does not negatively impact the surrounding environment. However, based on prior experience with the Barnes Crossing Automation Project, it is recognized that the project does not qualify as a categorical exemption. Therefore, we have included budget for Reclamation to complete an Environmental Assessment (EA) to identify any impacts in order to obtain clearance to begin construction. Recognizing the need for an EA prior to award should provide sufficient time to complete the EA prior to January 2013. The following answers are provided in response to the questions in the solicitation.

1. Construction of the upstream level gate structure will have **no permanent impacts and insignificant temporary impacts** on the surrounding environment. All major construction activities, including all excavation work, will be located below the normal water level in the canal following shutdown of the system in December. Minor trench will be required for electrical conduit along the top of canal banks used for vehicular access.

2. Endangered and threatened species found in parts of the Company's service area include:

- Giant Garter Snake – The work will be performed during the inactive season and will not disturb any ground above the normal water level in the canal.
- Swainson's Hawk – No trees are located within the vicinity of the project site that would be potential nesting sites.
- Valley Elderberry Beetle – There are no Elderberry shrubs at the project site.

3. Wetlands are not present within the vicinity of the site where the flow meters will be installed. There are wetlands in the Company's service area that are managed by the Natomas Basin Conservancy that will not be impacted by this project.

4. The irrigation water distribution system was constructed in 1921.

5. Individual features of the irrigation system will not be affected by this project.

6. Buildings, structures, or features in your irrigation district listed that might be eligible for listing on the National Register of Historic Places include two pump station buildings that are historically significant. However, neither of these structures is eligible for listing on the National Register of Historic Places.

7. There are known archeological sites that exist along the river in the Company's service area. However, this project is not located near any of these sites.

8. The project will not have a disproportionately high and adverse effect on low income or minority populations.

9. The project does not limit access to and ceremonial use of Indian sacred sites or result in other impacts on tribal lands.

10. The project will not contribute to the introduction, continued existence, or spread of noxious weeds or non-native invasive species known to occur in the area.

REQUIRED PERMITS AND APPROVALS

Aside from environmental compliance, no additional permits or approvals are required.

FUNDING PLAN AND LETERS OF COMMITMENT

Letters of Commitment

The Company is not relying on other funding sources to support this project. The following responses have been prepared for the questions identified in the solicitation.

1. The Company will contribute to the cost share requirement by providing at least 50% of the total project cost in order to implement the project. In-kind contributions will be provided for project administration and performance reporting, and minor construction activities that can reasonably be accomplished by Company staff. Cash contributions will be provided from the Company's Capital Improvements Fund to cost share with Reclamation on equipment procurement and installation. This work will be performed under service contracts with the Company's current vendors.

2. Prior to award of a funding agreement, the Company will determine the pre-project spill, as discussed above in Subcriterion A.1(a). This work will be performed beginning in April 2012, through December 2013 in order to enable construction prior to the 2013 irrigation season. If the Company does not perform this work until after a funding agreement is in place, construction would be postponed until 2014 in order to establish the pre-project condition. The majority of the effort will be absorbed by on-going responsibilities for the Northern ditch tender. Additional expense by staff is anticipated to be around $4,000. The effort is anticipated to require approximately

3. No assistance from other funding partners is required for this project

4. No other Federal funding is being sought or provided for this project.

5. No other funding requests have or will be prepared for this project.

SUMMARY OF NON-FEDERAL AND FEDERAL FUNDING SOURCES

FUNDING SOURCE	FUNDING AMOUNT
Non-Federal Entities:	
Natomas Central Mutual Water Company	
In-Kind Contribution*	$18,900
Cash Contribution	$221,300
Non-Federal Subtotal:	$240,200
Reclamation Funding:	$240,100
TOTAL PROJECT FUNDING:	$480,300

OFFICIAL RESOLUTION

This project has been presented to the Company's Board for consideration and has been included in discussions of the 2012 budget. However, due to the timing of the January Board meeting, an official resolution is not included in this application package. In accordance with the solicitationi, an official resolution in support of the Project by the Board will be provided to Reclamation following the February board meeting on February 14, 2012.

BUDGET PROPOSAL

The proposed budget for this project is presented on the following pages, in conformance with the guidelines of the funding opportunity announcement.

A budget narrative is provided after the proposed budget discussing each item in the proposal.

The proposed budget has been consolidated onto Standard Form 424A, Budget Information – Non-Construction Programs, and included in this proposal following the budget narrative.

In general, the Company will contribute the in-kind costs identified in the budget and provide cash contributions to pay local vendors for services and/or material supplied to project. Reclamation's cost share will contribute to the cost of major construction and procurement of the upstream level gate. The budget also provides Reclamation with sufficient funds to complete the environmental compliance for the project.

BUDGET ITEM DESCRIPTION	COMPUTATION $/Unit and Unit		Quantity	RECIPIENT FUNDING In-Kind	Cash	USBR FUNDING	TOTAL COST	Task 1 Admin/ Mgmt	Task 2 Final Design	Task 3 Const & Install	Task 4 Controls/ Program.	Task 5 Startup Testing	Task 6 Perf. Mon. & Final Rpt	Total
Salary & Wages														
General Manager	$62.98	/hour	24	$ 1,512			$ 1,512	$ 252	$ 252	$ 252	$ 252	$ 252	$ 252	$ 1,512
Assistant General Manager	$45.67	/hour	120	$ 5,480			$ 5,480	$ 731	$ 1,096	$ 1,096	$ 731	$ 731	$ 1,096	$ 5,480
Controller/ Office Manager	$28.36	/hour	40	$ 1,134			$ 1,134	$ 1,134						$ 1,134
Field Supervisor	$22.00	/hour	80	$ 1,760			$ 1,760		$ 176	$ 528	$ 352	$ 176	$ 528	$ 1,760
North Ditchtender	$19.50	/hour	80	$ 1,560			$ 1,560						$ 1,560	$ 1,560
Maintenance Labor/Equip Op	$18.00	/hour	120	$ 2,160			$ 2,160			$ 2,160				$ 2,160
Fringe Benefits														
General Manager	$14.49	/hour	24	$ 348			$ 348	$ 58	$ 58	$ 58	$ 58	$ 58	$ 58	$ 348
Assistant General Manager	$16.44	/hour	120	$ 1,973			$ 1,973	$ 263	$ 395	$ 395	$ 263	$ 395	$ 263	$ 1,973
Controller/ Office Manager	$11.06	/hour	40	$ 442			$ 442	$ 442						$ 442
Field Supervisor	$10.56	/hour	80	$ 845			$ 845		$ 84	$ 253	$ 169	$ 84	$ 253	$ 845
North Ditchtender	$13.26	/hour	80	$ 1,061			$ 1,061						$ 1,061	$ 1,061
Maintenance Labor/Equip Op	$3.96	/hour	120	$ 475			$ 475			$ 475				$ 475
Travel - Site Visits														
Staff Vehicles	$0.55	/mile	240	$ 132			$ 132		$ 16.50	$ 66.00		$ 16.50	$ 33.00	$ 132
Equipment														
none							$ -		$ -					
Supplies/Materials														
none														
Contractual/Construction														
US Level Gate - Golden Harvest	$73,100	LS	1		$ 36,550	$36,550	$ 73,100			$ 73,100				$ 73,100
US Level Gate Installation	$223,900	LS	1		$ 30,400	$193,500	$ 223,900			$ 223,900				$ 223,900
US Level Gate SCADA - TESCO	$34,300	LS	1		$ 34,300		$ 34,300			$ 34,300				$ 34,300
Chappell West Pump Station SCADA - TESCO	$50,300	LS	1		$ 50,300		$ 50,300			$ 50,300				$ 50,300
Chappell West Flow Meters - CIC	$10,600	LS	1		$ 10,600		$ 10,600			$ 10,600				$ 10,600
SCADA Programming and Integration - TESCO	$125	/hour	160		$ 20,000		$ 20,000				$ 20,000			$ 20,000
Final Design - Parsons Brinckerhoff	$120	/hour	200		$ 24,000		$ 24,000		$ 24,000					$ 24,000
Admin/Final Report - Parsons Brinckerhoff	$190	/hour	80		$ 15,200		$ 15,200				$ 3,040	$ 1,520	$ 10,640	$ 15,200
Environmental & Regulatory Compliance														
If needed, CEQA/NEPA determination	$10,000	LS	1			$10,000	$ 10,000	$ 10,000						$ 10,000
Other														
none														
Total Direct Costs				$ 18,882	$ 221,350	$ 240,050	$ 480,282	$ 12,880	$ 26,078	$ 397,483	$ 24,865	$ 3,232	$ 15,744	$ 480,282
Indirect Costs				$ -	$ -	$ -	$ -	$ -	$ -	$ -	$ -			$ -
Rounded Total Project Costs				**$ 18,900**	**$ 221,400**	**$ 240,100**	**$ 480,300**	$ 12,900	$ 26,100	$ 397,500	$ 24,900	$ 3,200	$ 15,700	$ 480,300

BUDGET NARRATIVE

Salaries and Wages – Company Staff

Current salary and wage rates have been provided for the Company staff along with an estimate of their effort required for this project. While these rates may increase annually depending on Company approval, no allowance has been made on the spreadsheet for future increases to these labor rates. Actual rates in place at the time work is performed will be used to determine the in-kind contribution.

Fringe Benefits – Company Staff

The Fringe Benefits associated with the direct labor rate for Company staff has been included in Appendix E of this proposal. The current actual rates have been used to establish the proposed budget. As with the salaries and wages, the actual rates at the time work is perform will be used when determining the in-kind contribution.

Travel

Costs have been included for up to eight (8) specific trips to the project site by Company staff in Company vehicles.

Equipment

No work is planned to be completed using Company equipment. Should the need arise for the Company to use their equipment during installation, the equipment usage will be tracked and invoiced to the project based on the US Army Corps of Engineer's recommend equipment rates for the Sacramento region.

Materials and Supplies

There are no supplies or materials to be provided by the Company for this project. All equipment for the project is to be procured by vendors and is accounted for under the "Contractual/Construction" category.

Contractual/Construction

The upstream level control gate (US-139) is to be provided by Golden Harvest or an equivalent gate is to be provided by other reputable manufacturers. A budgetary quote was provided by Golden Harvest and is included in Appendix D. The Company will receive final, binding quotes for manufacturers and select the manufacturer provide the best value.

The Company will solicit bids from local contractors to construct the upstream level control gate sluiceway. The lowest qualified bidder will be selected for award. A cost estimate has been prepared for this work and included in Appendix D. A 10% contingency has been included in the budget for this work.

Tesco Controls is the Company's SCADA integrator. Tesco completed the installation of the first phase of the SCADA system in 2010 and will be working on the integration of the Company's new Sacramento River diversion in 2012. Tesco has developed standardized RTU and ClearSCADA programming and is the logical selection for completing the integration of this project. The budget allocated for Tesco is based on their performance in installation and integration of the SCADA system in 2010. Quotes for the work in 2010 that are similar in nature and scope to this project have been included in Appendix D.

Concepts in Controls is one of two MACE meter sales representatives in northern California. They will be supplying flow meters for other installations in the irrigation system. Therefore, Concepts in Controls is the logical choice for supplying the flow meters and assisting with the field installations. The cost of the AgriFlo meters used for budgeting was based on updated quotes for work planned in 2012, and is included in Appendix D.

Parsons Brinckerhoff (PB) will assist with performance evaluation and project reporting. PB has been assisting the Company with other facility improvements and implantation of the SCADA system. The level of effort for final design was based on initial discussions. A final proposal to complete the work will be provided once a funding agreement is in place. An average rate was used to determine the budget amount for this item. The remaining level of effort for was estimated to assist with field selection, inspect site installations, compile flow data, and assist with preparation of the final report. This level of effort was estimated based on prior work performed on past/existing projects by PB's project manager and reflects the project manager's current rate.

Environmental and Regulatory Compliance Costs

Based on the Company's experience with their Barnes Crossing Project, an Environmental Assessment is anticipated. The cost for Reclamation to complete this work is likely to be similar to the effort required for the Barnes Crossing Project. Based on conversation with local Reclamation staff, a $10,000 budget was deemed prudent for this project.

Reporting

Project reporting costs incurred by the Company have been included in the staff hours above in Item 1 &2.

Other

No other costs are associated with this project.

Indirect Costs

Indirect costs are not included in this proposal.

Contingency Costs

The only contingency used in preparation of this budget was 10% for the construction of the upstream level gate sluiceway structure and installation of the gate. This contingency is identified in the cost estimate in Appendix D and has been included in the Contractual/Construction line item above.

Total Cost

Total project costs have been identified, as well as the subtotal cost for each task identified in the work plan in order to provide a clear definition of how the budget was determined.

BUDGET INFORMATION - Non-Construction Programs

OMB Approval No. 0348-0044

SECTION A - BUDGET SUMMARY

Grant Program Function or Activity (a)	Catalog of Federal Domestic Assistance Number (b)	Estimated Unobligated Funds		New or Revised Budget		
		Federal (c)	Non-Federal (d)	Federal (e)	Non-Federal (f)	Total (g)
1.		$	$	$	$	$
2.						
3.						
4.						
5. Totals		$	$	$	$	$

SECTION B - BUDGET CATEGORIES

6. Object Class Categories	GRANT PROGRAM, FUNCTION OR ACTIVITY				Total
	(1)	(2)	(3)	(4)	(5)
a. Personnel	$	$	$	$	$
b. Fringe Benefits					
c. Travel					
d. Equipment					
e. Supplies					
f. Contractual					
g. Construction					
h. Other					
i. Total Direct Charges *(sum of 6a-6h)*					
j. Indirect Charges					
k. TOTALS *(sum of 6i and 6j)*	$	$	$	$	$
7. Program Income	$	$	$	$	$

Authorized for Local Reproduction

Standard Form 424A (Rev. 7-97)
Prescribed by OMB Circular A-102

Previous Edition Usable

SECTION C - NON-FEDERAL RESOURCES				
(a) Grant Program	(b) Applicant	(c) State	(d) Other Sources	(e) TOTALS
8.	$	$	$	$
9.				
10.				
11.				
12. TOTAL *(sum of lines 8-11)*	$	$	$	$

SECTION D - FORECASTED CASH NEEDS					
	Total for 1st Year	1st Quarter	2nd Quarter	3rd Quarter	4th Quarter
13. Federal	$	$	$	$	$
14. Non-Federal					
15. TOTAL *(sum of lines 13 and 14)*	$	$	$	$	$

SECTION E - BUDGET ESTIMATES OF FEDERAL FUNDS NEEDED FOR BALANCE OF THE PROJECT				
(a) Grant Program	FUTURE FUNDING PERIODS (Years)			
	(b) First	(c) Second	(d) Third	(e) Fourth
16.	$	$	$	$
17.				
18.				
19.				
20. TOTAL *(sum of lines 16-19)*	$	$	$	$

SECTION F - OTHER BUDGET INFORMATION	
21. Direct Charges:	22. Indirect Charges:
23. Remarks:	

APPENDIX A

COMPANY SERVICE AREA MAP

NATOMAS BASIN CONSERVANCY MAP

NATOMAS MUTUAL WATER COMPANY

Dodge Crossing Automation Project

Exhibit A

Jan. 2011

2010 BASE MAP

THE NATOMAS BASIN CONSERVANCY

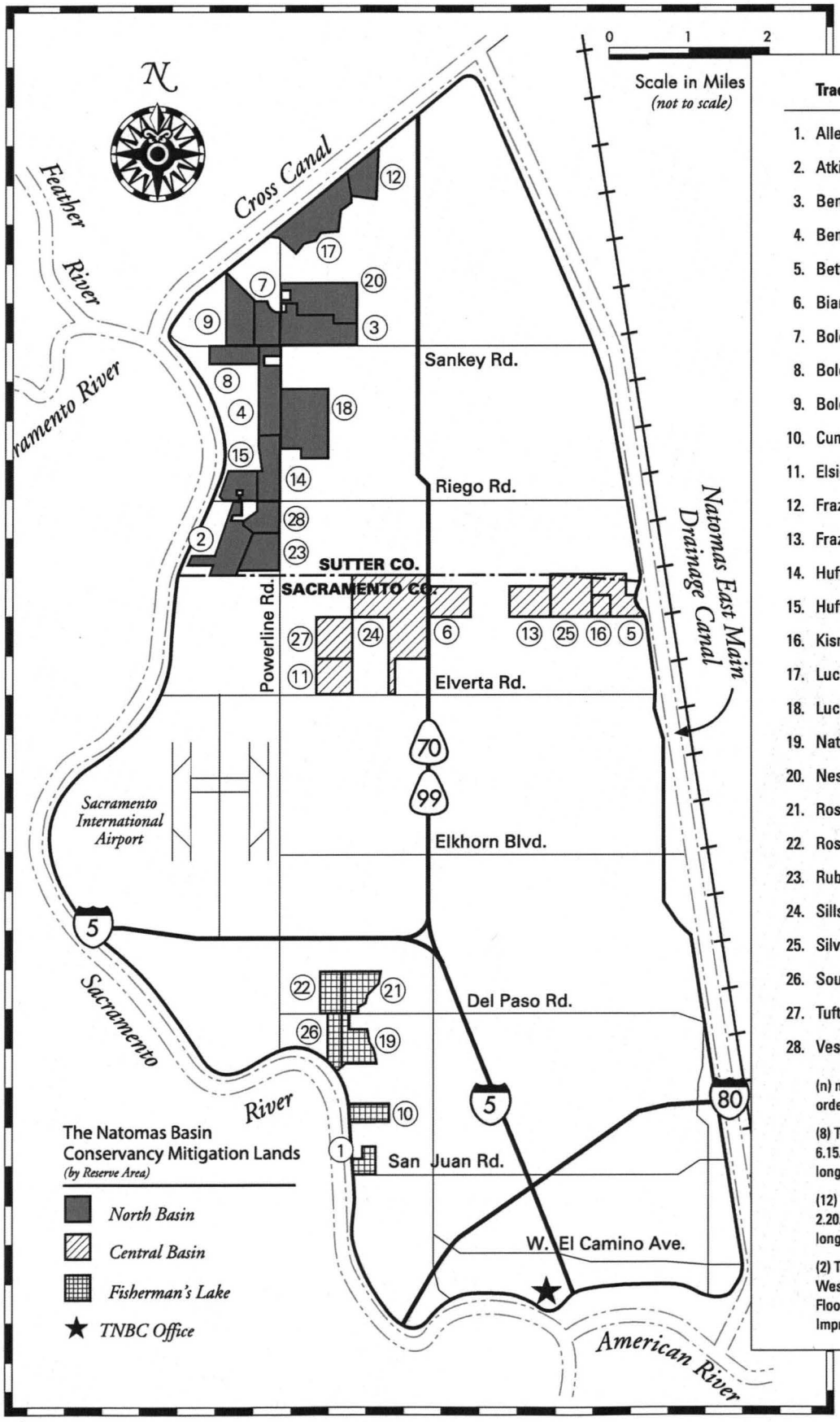

Tract	Acq. Date	Acres
1. Alleghany (14)	11.07.02	50.2601
2. Atkinson (16)	06.12.03	198.83
3. Bennett North (4)	05.17.99	226.675
4. Bennett South (5)	05.17.99	132.486
5. Betts (2)	04.05.99	138.992
6. Bianchi West (28)	11.07.06	110.16
7. Bolen North (23)	04.29.05	113.619
8. Bolen South (24)	04.29.05	102.381
9. Bolen West (26)	09.01.06	155.141
10. Cummings (15)	11.07.02	66.8307
11. Elsie (29)	11.07.06	158.031
12. Frazer (9)	07.31.00	92.6
13. Frazer South (30)	11.07.06	110.372
14. Huffman East (19)	09.30.03	135.746
15. Huffman West (18)	09.30.03	157.85
16. Kismat (3)	04.16.99	40.293
17. Lucich North (6)	05.18.99	267.986
18. Lucich South (7)	05.18.99	351.889
19. Natomas Farms (11)	07.09.01	96.46
20. Nestor (27)	09.01.06	233.16
21. Rosa East (21)	03.23.05	106.2827
22. Rosa Central (22)	03.23.05	100.015
23. Ruby Ranch (17)	06.23.03	91.078
24. Sills (13)	07.15.02	436.0559
25. Silva (1)	01.07.99	159.2
26. Souza (10)	07.02.01	40.00
27. Tufts (20)	09.29.04	147.95
28. Vestal (25)	09.12.05	94.951

(n) number in parentheses represents chronological order of acquisition

(8) The Brennan tract, acquisition #8,was acquired 6.15.00, subsequently exchanged on 9.1.06, and no longer owned by TNBC.

(12) The Ayala tract, acquisition #12, was acquired on 2.20.02, subsequently exchanged on 11.03.06, and no longer owned by TNBC.

(2) The Atkinson tract (6.566 acres), and (15) the Huffman West tract (23.146 acres) were sold to the Sacramento Area Flood Control Agency on 05.15.09 for the Natomas Levee Improvement Program.

© The Natomas Basin Conservancy, 2010

Revision Date: 01/28/2010

APPENDIX B

EXCERPTS FROM THE SACRAMENTO VALLEY INTEGRATED REGIONAL WATER MANAGEMENT PLAN

Final

Sacramento Valley Integrated Regional Water Management Plan

December 5, 2006

- Formulate and conduct data gathering and investigations to build a credible body of knowledge about the groundwater resources.
- Prepare and distribute factual information to ensure that the public has an opportunity to become better informed about this important groundwater resource.
- Identify policy issues that need to be considered by or recommended to the respective entities in the region.

Additionally, the Coordinating Group will help facilitate and clarify the respective roles of the Department, special districts, and counties. This discussion may form the basis for an MOU or similar arrangement that will articulate the respective roles necessary for a cogent and coordinated integrated plan for groundwater management in Northern California.

4.1.2 System Improvement/Water Conservation Strategies

For this IRWMP, the system improvement strategy refers to potential projects or operational changes that will improve water management at the district or farm level, and actions that can be taken related to urban use. System improvement projects include canal lining, installation of facilities to reduce operational spills, or changes in management that can result in decreased river diversions or additional reuse of water.

The system improvement/water conservation strategies are designed to provide multiple benefits and serve multiple objectives. They provide for agricultural water recycling, water conservation, drainwater management, system automation, and associated water quality improvements. These types of projects help meet local and regional water supply needs, improve water quality, and enhance water system flexibility. Common elements among these strategies follow:

- They are locally formulated.
- They provide local/districtwide water supply reliability.
- They improve water system operation at the district level.
- They generally provide water quality benefits.
- They enhance district water system flexibility and system operations.

Numerous water use efficiency projects have been implemented recently, with additional projects seeking funding either underway or awaiting final approvals to proceed. A list of proposed projects formulated under system improvement strategies is provided in Appendix A.

In October 2002, NCWA, working with various agencies throughout Northern California, developed a regional agricultural water use efficiency program to encourage water use efficiency in the region and to help implement cost-effective local and regional programs to use water more efficiently. The regional program was based on meeting Quantifiable Objectives and/or Targeted Benefits established by CALFED and the Department. The

IRWMP provides an opportunity to further this regional water use efficiency program by a more detailed review of the potential opportunities and limitations for water use efficiency in the Sacramento Valley and then providing a framework for additional system improvements or other water use efficiency measures.

4.1.2.1 Urban Water Management

The Urban Water Management Planning Act of 1983 requires that every urban water supplier (public or private) who provides water for municipal purposes either directly or indirectly to more than 3,000 customers or supplies more than 3,000 ac-ft of water annually must prepare and submit to the Department an urban water management plan. The plan is to be updated at least every 5 years. Urban water management plans include the area served, quantity and sources of water, groundwater management plans, and future supply and demand projections. The Department reviews all submitted urban water management plans. All cities across the region have prepared these plans, and many urban purveyors have also completed and are implementing water master plans that guide their provision of water services.

4.1.2.2 Agricultural Drainwater Recycling and Management

Drainwater management, in the form of controlling releases of drainwater from fields, reusing drainwater for onfield irrigation, and monitoring inflows to and outflows from drains, is a common practice in much of the Sacramento Valley. On a subbasin or larger scale, the management actions of the farmers within the individual districts can result in major cumulative influences on regional hydrology. These influences could include changes in river diversions (reduced or increased diversions as drainwater supplies change relative to irrigation demand); changes in flow rates in many natural sloughs, streams, and drains; the creation of habitat along the watercourses; and water quality and temperature effects at points of discharge to receiving waters. In addition to these influences on regional hydrology and habitat, drainwater management provides critical, regional-scale benefits by increasing the overall subbasin efficiency through repeated use of field tailwater runoff.

All of these impacts and benefits result from the largely independent actions of many irrigators who respond daily to changes in their local water supply and demand conditions. With some level of regional coordination, drainwater management could be expanded in conjunction with actions to address the water quality of return flows and other regulatory issues. The most logical and effective geographic unit for regional drainwater management appears to be the hydrologic subbasin. The following are the key objectives and related benefits of a regional drainwater management program:

- Improved measurement of drainage flows.
- Improved water quality sampling and real-time monitoring.
- Coordinated management of drainwater flow rates.
- Increased water management flexibility and potential for benefits.

APPENDIX C

TABLE OF ANNUAL DIVERSIONS

TABLE NO. 1

Natomas Mutual Water Company

Summary of Monthly Diversions, 1986 to 2011
Monthly Values in acre-ft

	April	May	June	July	Aug	Sept	Oct	Total
1986	5363	18705	16498	16822	12677	5799	1074	76,938
1987	6821	19147	16934	15906	14973	4867	2527	81,175
1988	5178	16313	15774	21258	17251	5873	3070	84,717
1989	3097	18151	17768	19027	15695	5643	593	79,974
1990	7366	16571	16782	20585	16805	4447	2900	85,456
1991	2307	18584	18996	20219	17131	3754	1629	82,620
1992	1789	22027	19807	20366	16730	1952	671	83,342
1993	447	17985	15215	20272	16291	5225	1153	76,588
1994	8807	19622	23459	24116	13898	2916	1185	94,003
1995	519	9441	16274	18050	19307	4410	2910	70,911
1996	1088	16225	15242	23078	19563	10034	5198	90,428
1997	9197	22629	19726	18935	11144	3627	3497	88,755
1998	434	10398	8610	19997	14211	5845	5034	64,529
1999	1982	21824	17941	23628	17379	5216	2846	90,816
2000	2006	17892	19591	21876	17009	1612	558	80,544
2001	3170	15921	15832	18586	12334	2849	1289	69,981
2002	5104	19869	21247	21815	13026	6551	416	88,028
2003	1290	12566	16459	23861	17875	4112	983	77,146
2004	8173	18706	21850	23882	14508	6586	1219	94,924
2005	1068	13409	12874	21991	19114	10248	1535	80,239
2006	0	10556	14013	20783	18394	8396	698	72,840
2007	2677	13497	13943	15552	12856	5416	914	64,855
2008	6042	12153	11735	13879	10440	2284	683	57,216
2009	2612	9959	10423	15280	11117	3096	288	52,775
2010	0	7166	9333	13752	10355	4495	955	46,056
2011	24	10425	6209	12368	11354	3281	346	44,007
Average	3329.3	15759.3	15866.7	19457.1	15055.3	4943.6	1698.9	76,110
Range								
Max	9197	22629	23459	24116	19563	10248	5198	94,924
Min	0	7166	6209	12368	10355	1612	288	44,007

APPENDIX D

SUPPORTINGN DOCUMENTATION FOR THE

DODGE CROSSING AUTOMATION PROEJCT

Dodge Crossing Automation Project

Preliminary Construction Cost Estimate

Item	Description	Quantity	Units	Labor Rate/ Unit Cost	Total Amount
US Level Control Gate					
1	Mobilization -5%	1	LS	13,000	13,000
2	Remove slide gates	1	Day	2,000	2,000
3	Stripping & Excavation	5	Days	3,500	17,500
4	Concrete Sluiceway - US Level Gate	55	CY	1,500	82,500
5	Concrete Wingwalls	28	CY	1,200	33,600
6	Backfill	400	CY	50	20,000
7	Rip-Rap	50	Tons	40	2,000
8	US Level Control Gate	1	LS	85,000	85,000
9	Walkway Grating	40	SF	50	2,000
10	Walkway structural steel	520	LBS	5	2,600
11	Hand rail	110	LF	60	6,600
12	Misc	1	LS	6,200	3,200
		Subtotal Construction Contract:			270,000
			Contingency - 10%		27,000
	Total US Level Control Gate Construction Contract:				297,000
SCADA Improvements					
1	US Level Gate SCADA Site				
1.1	RTU Panel, Ethernet Radio, Pole Mast, Antenna Solar Panel, Battery	1	LS	20,000	20,000
1.2	Level Sensors	2	EA	3,000	6,000
1.3	Stilling Wells	2	EA	500	1,000
1.4	Conduit & Wire, including trenching	100	LF	40	4,000
1.5	Mast footing	1	CY	300	300
1.6	5% Price Escalation to 2013	1	LS	1,500	1,500
1.7	Electrician for wire pulling	1	days	1,500	1,500
2	Chappell West Pump Station				
2.1	RTU Panel, Ethernet Radio, Pole Mast, Antenna Charger, Battery	1	LS	30,000	30,000
2.2	Level Sensors	2	EA	3,000	6,000
2.3	Stilling Wells	2	EA	500	1,000
2.4	Flow Meters				
	MACE Agriflo Flow Meter	1	EA	2,200	2,200
	MACE Agriflo Doppler Cards	3	EA	600	1,800
	MACE Flosi Card	1	EA	600	600
	MACE Doppler Inserts	3	EA	2,000	6,000
2.5	Conduit & Wire, including trenching	150	LF	40	6,000
2.6	Mast footing	1	CY	300	300
2.7	5% Price Escalation to 2013	1	LS	2,500	2,500
2.8	Electrician for service and wire pulling	3	days	1,500	4,500
3	ClearSCADA and PLC Programming	160	hrs	125	20,000
		Total SCADA Improvments:			115,200

PARSONS BRINCKERHOFF COMPUTATION SHEET

Page 1 of 7

Made by SCB

Date 1/10/12

Checked by

Date

Subject DODGE CROSSING – US LEVEL GATE QUANTITIES & COSTS

MOB/DEMOB:

USE 5% OF DIRECT CONSTRUCTION COST

STRIPPING: TAKE TO 4 INCHES OFF OF CANAL SLOPES & TOPS OF BANK

STRIP CANAL BOTTOM

SLOPE FACTOR FOR 1.5:1 = $\sqrt{1.5^2+1^2}$ = 1.8 VERTICAL ON 1.2 HORIZ.

STRIP ENTIRE LENGTH PLUS 10 FT EACH SIDE

= 10 + 18 + 20 + 10 = 58 SAY 60 FT

WIDTH = 20 FT × 1.2 + 15 + 20 × 1.2 = 63 SAY 65 FT

$V = \frac{60 \times 65 \times 4/12}{27} = 48$ CY

UNIT COST: USE \$3/CY ASSUME RESPREAD ON SLOPE

STRIPPING COST = 48 × 3 = 144 ← TOO LOW

ASSUME 1 DAY TO COMPLETE @ \$3500/DAY w/ MEANS CREW B-3A

REMOVE & SLIDE GATES

NMNL STAFF & EQUIP ≈ \$2000/DAY FOR 1 DAY = \$2,000

PARSONS BRINCKERHOFF COMPUTATION SHEET

Page 2 of 7

Made by SCB

Date 1/10/12

Checked by

Date

Subject DODGE CROSSING - US LEVEL GATE

EXCAVATION

EXCAVATE CANAL BANKS FOR CONCRETE PLACEMENT

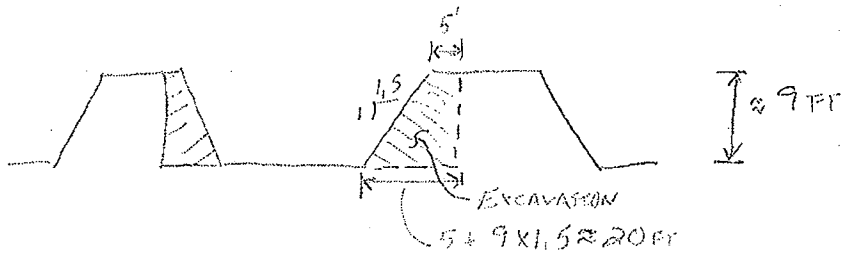

$A = \frac{1}{2}(5+20)9 = 112.5$ SF

$V = 2 \times 112.5 \times 60$ FT $/27 = 500$ CY

EXCAVATE CANAL BOTTOM TO 18 inches BELOW CANAL BOTTOM

$V = 1.5 \times 15 \times 60/27 = 50$ CY

TOTAL CY = 550 CY ← TOO LOW ESTIMATE ON VOLUME

ASSUME 3 DAYS TO EXCAVATE

@ \$3,500/DAY (MEANS CREW B-3A)

10,500

COMBINE STRIPPING & EXCAVATION

TOTAL = 1 + 3 DAYS = 4 DAYS

ADD 1 DAY FOR SET & MOVE ACROSS CANAL [illegible]

TOTAL STRIPPING & EXCAVATION = 5 × 3,500 = \$17,500

PB-CP001 (11/09)

CONCRETE:

FORMED GATE SLUICEWAY

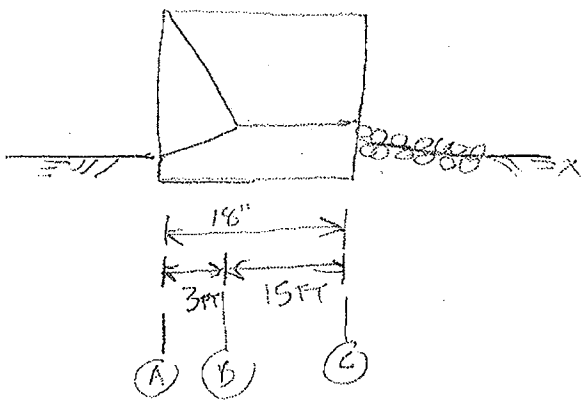

$V_1 = \frac{(A)+(B)}{2} \times 3FT/27$

$= \frac{34.25+86}{2} \times 3/27 = 6.7CY$

$V_2 = \frac{(B)+(C)}{2} \times 15FT/27 =$

$= 86 \times 15/27 = 47.8CY$

$V_{TOTAL} = 54.5CY$

(A)

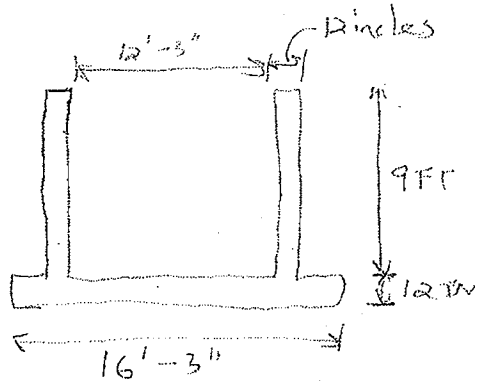

$A = 2 \times [9 \times 1] + (16'-3")(1) = 34.25SF$

(B)

(C)

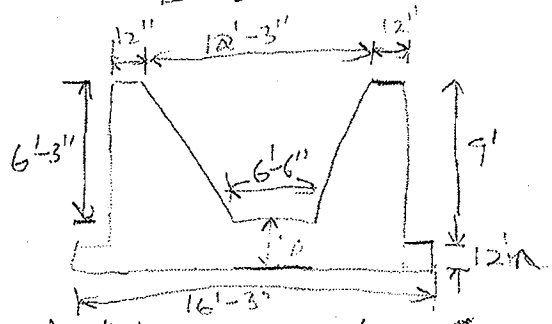

$A = (16'-3" \times 1) + 9' \times (14'-3") - 1/2\,(6'-6 + 12'-3")(6'-3")$

$= 86SF$

USE $1500/CY TO ACCOUNT FOR SPECIAL FORM-WORK EMBEDDED MATERIAL, AND BLOCKOUTS

SLUICEWAY = 54.5 CY @ $1,500/CY = $81,750

Subject DODGE CROSSING – US LEVEL GATE

CONCRETE WINGWALL

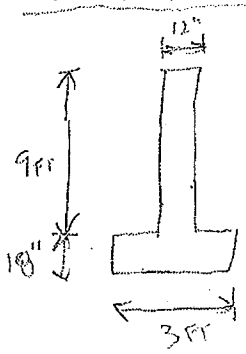

HEADWALLS

$V = [(9 \times 1) + (3 \times 1.5)] \times (2 \times 12\,FT)/27 = 12\,CY$

EXT WALLS

$V = [(9 \times 1) + (3 \times 1.5)] \times (2 \times 16\,FT)/27 = 16\,CY$

TOTAL $V = 12 + 16 = 28\,CY$ @ \$1,200/CY = \$33,600

BACKFILL

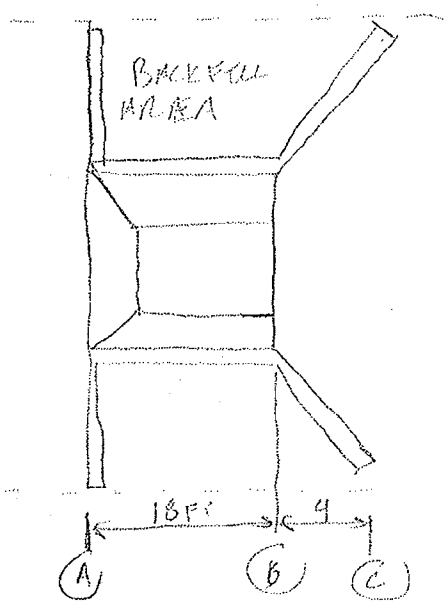

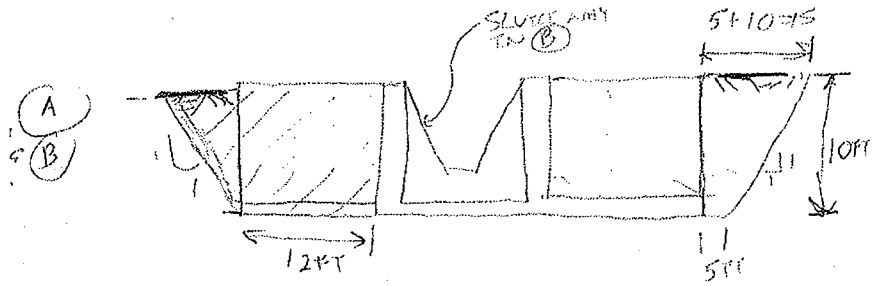

$A = [12 \times 10 + \frac{1}{2}(5+15) \times 10] \times 2 = 440\,SF$

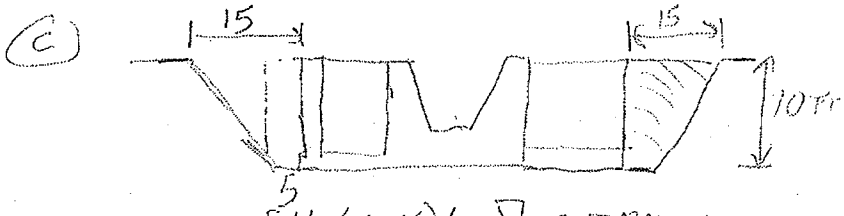

$A = 2 \times [\frac{1}{2}(5+15)(10)] = 200\,SF$

$V = [440 \times 18 + \frac{1}{2}(440+200)(4)]/27 = 340\,CY + 20\%\ MISC \approx 400\,CY$

USE \$50/CY FOR IMPORT, PLACEMENT & COMPACTION

400 CY @ \$50/CY = \$20,000

RIP-RAP

ASSUME 18 INCH THICK

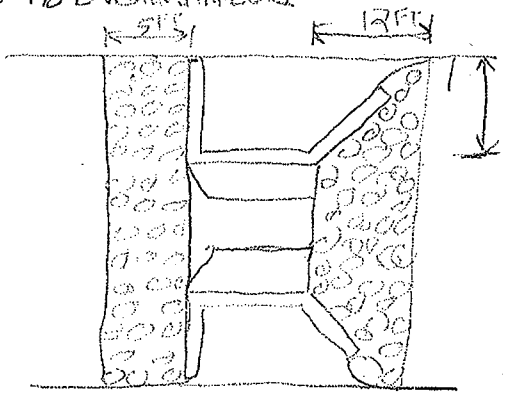

IN FRONT OF STRUCTURE

$V = [2 \times (9FT \times 1.8) + 15] \times 1.5 \times 5FT / 27$

$= 13 CY @ 1.6 TONS/CY = 21 TONS$

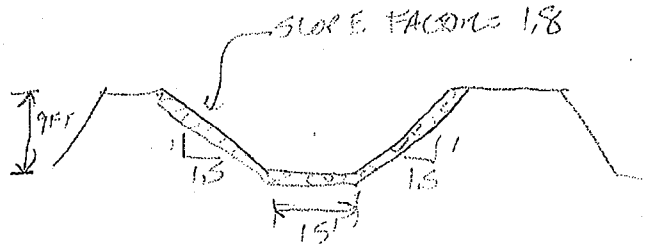

DOWNSTREAM OF STRUCTURE:

$A = [2 \times (5.25' \times 1.8) + 6.5] \times 1.5' = 36.1 SF$

IMMEDIATEL DOWNSTREAM

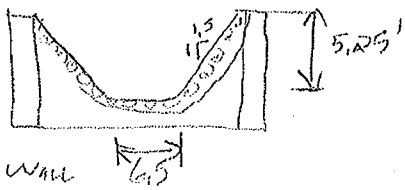

AT END OF WALL

$A = [2 \times (9' \times 1.8) + 15] \times 1.5' = 71.1 SF$

AT END OF WALL

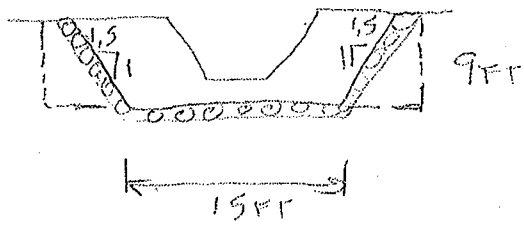

$V = 1/2 (36.1 + 71.1)(12FT)/27$

$= 16 CY @ 1.6 TONS/CY = 26 TONS$

TON WEIGHT = 47 TONS SAY 50 TONS @ \$40/TON = \$2,000

PARSONS BRINCKERHOFF COMPUTATION SHEET

Page 6 of 7

Made by SLB

Date 1/10/12

Checked by

Date

Subject Dodge Crossing – US Level Gate

UPSTREAM LEVEL CONTROL GATE

QUOTE FOR GATE FROM GOLDEN HARVEST US-139: $68,000
PLUS 7½% TAX 5,100
FOB INCLUDED 73,100

INSTALL GATE SEALS & TRUNNION ANCHORS
1 DAY WITH MEAN CREW C-2 @ $3,000/DAY = 3,000

INSTALL GATE & INSTALL ADJUSTMT
1 DAY WITH MEANS CREW C-2 + CRANE & OPERATOR
= 3,000 + 1,800 + 600 = 5,400

TOTAL COST = 73,100 + 3,000 + 5,400 = 81,500

ASSUME 3,500 FOR MISC MATERIALS (EXPOY, SEALS, etc)

TOTAL COST = $85,000

PB-CP001 (11/09)

PARSONS BRINCKERHOFF COMPUTATION SHEET

Page 7 of 7

Made by SCB

Date 1/10/12

Checked by

Date

Subject DODGE CROSSING - VS LEVEL GATE

WALKWAY BEHIND GATE

GRATING

WIDTH = 3 FT
LENGTH = 12.5 FT } AREA = 3×12.5 = 38 SF @ $50/SF $1,900

CHANNEL SUPPORT BEAMS

ASSUME C6×13 → 2 × 12.5' × 13#/LF = 325# MAIN BEAM
→ 4 × 3 × 13#/LF = 156# CROSS BEAMS
WALL SUPPORT ∠ 3×2×1/4 → 2 × 3 × 5 = 30# WALL SUPPORT
SAY @ 5#/LF
511#

SAY 520# @ $5/lb, GALVANIZED & INSTALLED

520# @ $5/LF = $2,600

HANDRAIL

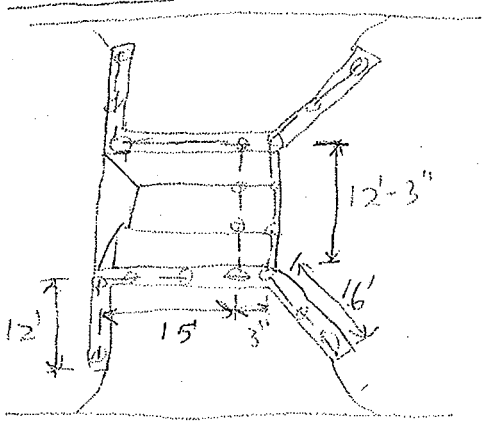

LENGTH OF HANDRAIL

L = 2×[12 + 15 + 16] + 2×12'-3" = 110'-6"

USE $60/LF FOR 2 RAIL, 1½" STEEL PIPE GALVANIZED

110'-6" @ $60/LF = $6,630 SAY $6,700

PB-CP001 (11/09)

PARSONS BRINCKERHOFF COMPUTATION SHEET

Page 1 of 3

Made by SCB

Date 1/10/12

Checked by

Date

Subject DODGE CROSSING - SCADA

US LEVEL GATE SITE

RTU PANEL
ETHERNET RADIO
30 FT MAST FOR PANEL & ANTENNA
ANTENNA
SOLAR PANEL
BATTERY
} SIMILAR TO 30's PUMPING PLANT SCADA STATION COST ≈ $20,000

U/S LEVEL SENSOR
D/S LEVEL SENSOR
} 3,000 each → $6,000

STILLING WELLS (2) 500 each → $1,000

2" CONDUIT & WIRE - 2 X 50 FT 2": 100 FT @ $25/LF CONDUIT, 300 FT @ $3/LF WIRE } = $3,400

TRENCHING: 2 X 50 FT = 100 FT @ $6/LF = $600 FT
2' WIDE, 3 FT DEEP
BACKFILL & COMPACTION

CONCRETE FOOTING FOR MAST ≈ $300
24" ϕ, 6 FT DEEP

SUBTOTAL FOR
US LEVEL GATE = $31,300
+ 5% FOR INCREASED TO EQUIPMENT COSTS = 1,500
= 32,800

PLUS FOREMAN TO PULL WIRE & TERMINATE
1 DAY @ 1500/DAY

PB-CP001 (11/09)

PARSONS BRINCKERHOFF COMPUTATION SHEET

Page 2 of 3

Made by SLB

Date 1/10/12

Checked by

Date

Subject Dodge Crossing – SCADA

CHAPPELL WEST PUMP STATION

RTU PANEL
ETHERNET RADIO
40 FT MAST
ANTENNA
CHARGER
BATTERIES

} SIMILAR TO 30's PUMPING PLANT SCADA STATION $30,000

LEVEL SENSOR = 2 X 3,000 = $6,000
INTAKE & DISCHARGE PITCH
STILLING WELL = 2 X 500 = $1,000

FLOWMETERS – BASED ON UPDATED QUOTES ON 1/3/12 from CONCEPTS IN CONTROLS

3 AGMIFLOW SENSORS = 2,000 each x 3 = $3,000
1 AGMIFLOW METER = 2200 each x 1 $2,200
3 DOPPLER CARDS = 600 each x 3 = 1,800
1 FUSION CARD 600 each x 1 = 600
$4,200

CONDUIT, WIRE, TRENCHING
ASSUME 3, 50 FT RUNS @ $35/LF = 3 x 50 x 35 = $5,250
SAY $5,500

SUBTOTAL FOR CHAPPELL WEST PUMP STATION = 46,700
ADD 5% FOR FUTURE INCREASES IN EQUIPMENT COSTS = 2,500
TOTAL = 49,200

PLUS ELECTRICIAN FOR SERVICE HOOKUP & WIRE PULLING: 3 DAYS @ 1500/DAY = 4,500

PB-CP001 (11/09)

PARSONS BRINCKERHOFF COMPUTATION SHEET

125 YEARS

Subject: DODGE CROSSING - SCADA

Page 3 of 3

Made by: SCB

Date: 1/10/12

Checked by:

Date:

SCADA PROGRAMMING & INTEGRATION

1) CLEARSCADA PROGRAMMING: 40 hrs
2) US LEVEL GATE PLC PROGRAMMING 32 hrs
3) CHAPPEL WEST PLC PROGRAMMING 32 hrs
4) BARNES CROSSING PLC PROGRAMMING 32 hrs
5) START-UP TESTING & TROUBLESHOOTING 24 hrs

160 hrs @ $125/hr = $20,000

PB-CP001 (11/09)

GOLDEN HARVEST, INC.
GOLDEN GATES

(360) 757-4334
1-800-338-6238
Fax (360) 757-1135

P.O. BOX 287
Burlington, WA 98233
sales@goldenharvestinc.com
goldenharvestinc.com

Quoted by: NOLAN ALLEN (nolana@goldenharvestinc.com) BUDGET QUOTATION #11-0849X (Rev A) PAGE 1 OF 1

Please respond to:
Mr. Brett Gray, Assistant General Manager
Natomas Central Mutual Water Company
P: 916-826-7672
E: bgray@natomaswater.com
C/O: Mr. Scott L. Brown / Supervising Engineer
Parsons Brinckerhoff Engineering
E: BrownSc@pbworld.com

Golden Harvest Representative:
MISCO
5976 W. Las Positas Blvd. #226
Pleasanton, CA 94588
Phone: 925-225-1900
Fax: 925-225-9200
Sandy Clarke
sclarke@miscowater.com

DATE: 8/11/11 ***(Revised 12/28/11)***
QUOTE EXPIRES: 30 days
JOB: Canal Improvements for NCMWC
Sacramento area, CA

BID DATE: N/A
ENGINEERS: N/A – NCMWC In-house project

FOB: FACTORY (Full Freight Allowed)
Split Shipments will be at buyer's expense
TERMS: Net 30
SUBMITTALS: 2 to 4 weeks after receipt of order
DELIVERY: 12 to 14 weeks following submittal approval.
ADDENDA REC'D:

BUDGET QUOTE

#	LOCATION	GATE	SIZE	TYPE	QTY	TOTAL
1	CANAL - 165 CFS UPSTREAM VERSUS DOWNSTREAM DIFFERENTIAL OF 0.5 FT	GH-9000 SERIES	US-139	GH-9000 SERIES, MODEL US-139 AUTOMATIC UPSTREAM LEVEL CONTROL GATE FOR MOUNTING IN CONCRETE STRUCTURE. MAINTAINS WATER LEVEL WITH FLOW AT APPROXIMATELY 165 CFS AND A DIFFERENTIAL HEAD OF APPROXIMATELY 0.50' **BUDGET PRICING:** PAINTED STEEL @ $56,000 EA TYPE 304 STAINLESS STEEL @ $68,000.00 EACH	1	

Note: All prices include freight and startup

1. Stainless steel anchor bolts (all-thread studs with nuts) are included for concrete mounted frames. Two-part epoxy is not included.
2. Slide gates per specification.
3. Sales tax not included.
4. Mill finish on stainless steel/aluminum surfaces.

PRELIMINARY DRAWING

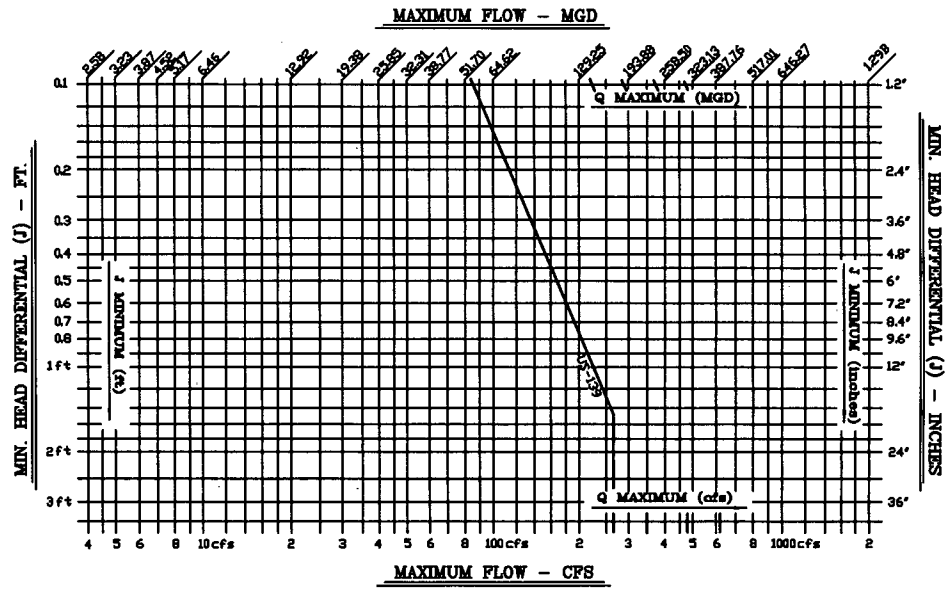

GH-9000 US139

ITEM	QTY	DESCRIPTION	NOMECLATURE
100	1	GATE ASSEMBLY	SEE SHEET B
101	1	GATE SEAT	
ALL MOUNTING HARDWARE 304 STAINLESS STEEL HARDWARE			

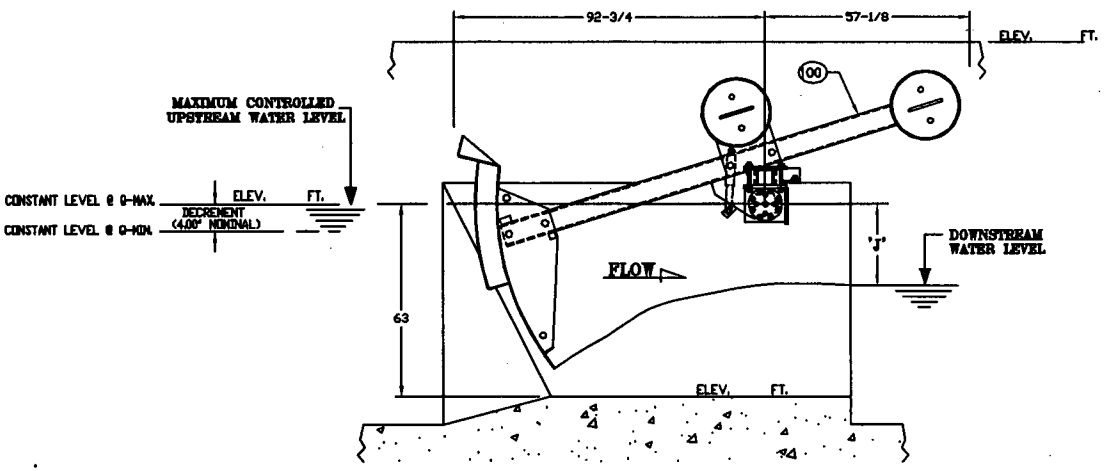

GH-9000 US139 UPSTREAM LEVEL CONTROL GATE	GOLDEN HARVEST GOLDEN GATES 1-800-336-6336 P.O. BOX 287 Burlington, WA 98233		– REQ.
Project Description:			Date Drawn:
For:			Revision:
Contractor:			Revision:
Engineer:			Revision:
Drawn By:		Scale: NTS	Job No.: / G.H. Drawing #: / Contract Sht #:

THIS DRAWING IS THE PROPERTY OF GOLDEN HARVEST, INC. THE DESIGN, DATA AND INFORMATION CONTAINED WITHIN IS NOT TO BE USED, DISSEMINATED, LOANED OR REPRODUCED IN WHOLE OR IN PART WITHOUT THE WRITTEN CONSENT OF GOLDEN HARVEST, INC.

ITEM	QTY	DESCRIPTION	PART NO./SIZE	MATERIAL
100.1	1	FRAME WELDMENT		
100.2	2	COUNTERWEIGHT COVER		
100.3	4	HEX HEAD BOLT		
100.4	1	LEAF WELDMENT		
100.5	1	PIPE PLUG		
100.6	1	COUNTERWEIGHT WELDMENT		
100.7	1	SUPPORT BEAM		
100.8	2	SHOCK ABSORBER		
100.9	8	WASHER		
100.10	4	COTTER PIN		
100.11	2	HOUSING SUPPORT		
100.12	2	COVER PLATE		
100.13	2	BEARING HOUSING		
100.14	2	BEARING		
100.15	2	OIL SEAL		
100.16	16/16	ALL THREADED STUD & NUT		
100.17	8/8	ALL THREADED STUD & NUT		
100.18	2	GREASE NIPPLE		
100.19	2	O-RING SEAL		
100.20	2	PLUG SCREW		
100.21	2	RETAINER CLIP		
100.22	2	SPACER		
100.23	2	SUPPORT BAR		
100.24	8/16	ALL THREADED STUD & NUTS		
[1] 100.25	2/2	HEX HEAD BOLT & WASHER		
[1] 100.26	6	ADJUSTMENT SHIM		

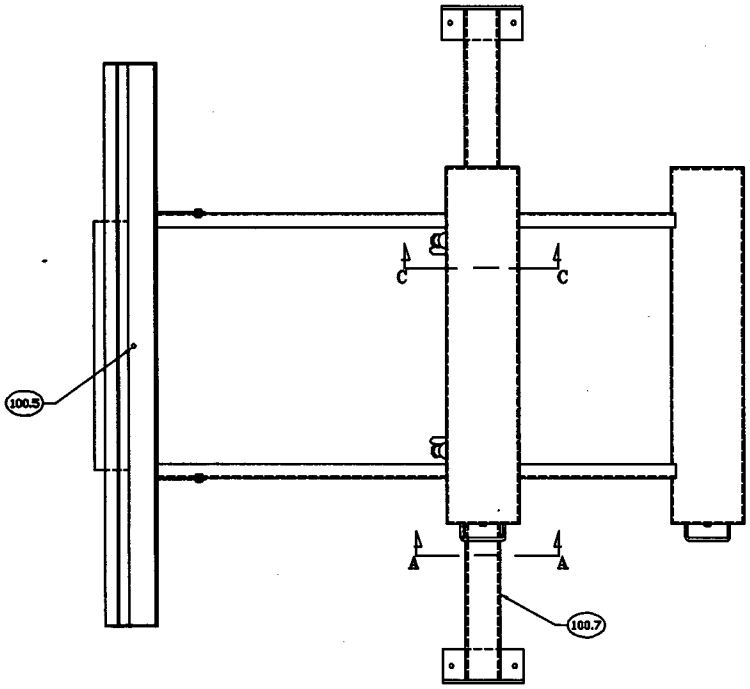

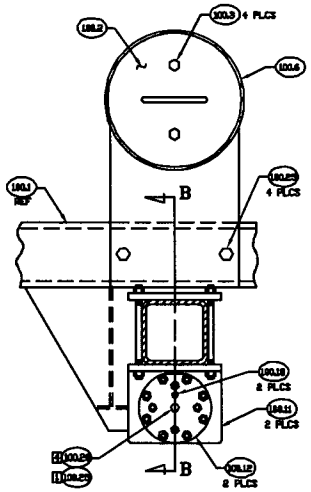

SECTION A-A

PRELIMINARY DRAWING

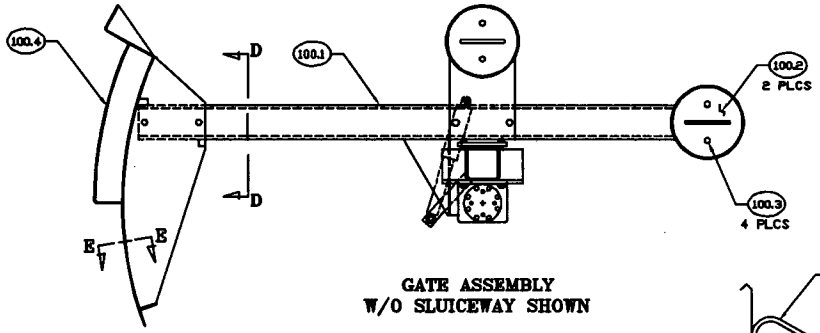

GATE ASSEMBLY
W/O SLUICEWAY SHOWN

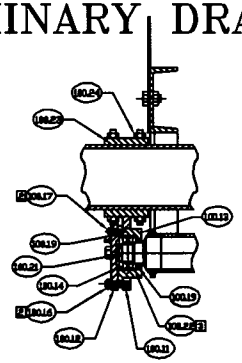

SECTION B-B

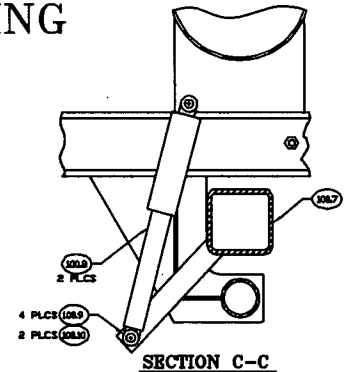

SECTION C-C

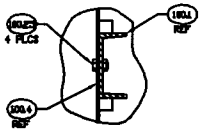

SECTION D-D

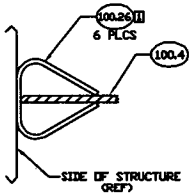

SECTION E-E

[4] BOTH SPACERS ARE LOCATED IN ONE BEARING HOUSING ONLY.

[3] AFTER GATE INSTALLED & ALIGNED, REMOVE ITEM 100.25 AND INSTALL ITEM 100.20 , TYP BOTH SIDES.

[2] APPLY LOCKTITE STUDLOCK OR EQUAL TO THREADS PRIOR TO INSTALLATION OF STUDS INTO HOUSING.

[1] DISCARD AFTER GATE INSTALLED & ALIGNED.

NOTES: FOR THIS SHEET ONLY

THIS DRAWING IS THE PROPERTY OF GOLDEN HARVEST, INC. THE DESIGN, DATA AND INFORMATION CONTAINED WITHIN IS NOT TO BE USED, DISSEMINATED, LOANED OR REPRODUCED IN WHOLE OR IN PART WITHOUT THE WRITTEN CONSENT OF GOLDEN HARVEST, INC.

GH-9000 US139
UPSTREAM
LEVEL CONTROL
GATE

GOLDEN HARVEST
GOLDEN GATES
1-800-388-6238
P.O. BOX 257 Burlington, WA 98233

Project Description:

For:

Contractor:

Engineer:

Date Drawn:

Revision:

Revision:

Revision:

G.H. Drawing #: B

Drawn By:

Scale: NTS

Job No.:

Contract Sht #: –

PRELIMINARY DRAWING

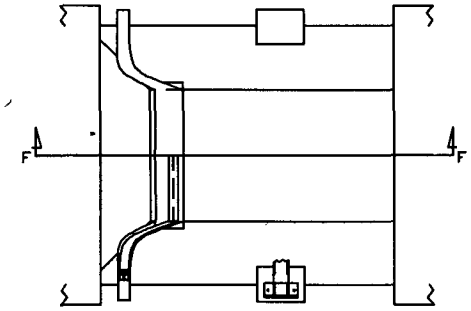

TOP VIEW 14

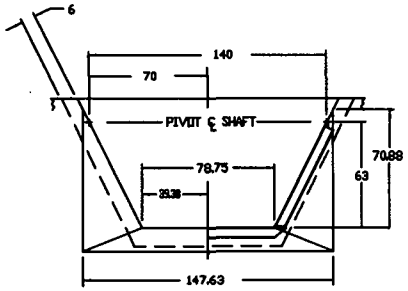

VIEW G-G

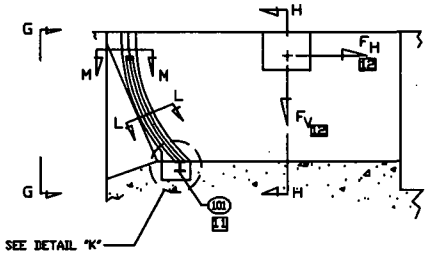

SECTION F-F

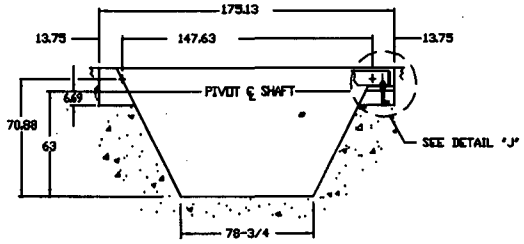

SECTION H-H

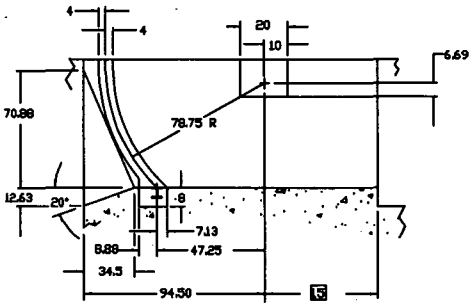

SECTION F-F
(SECOND SECTION)

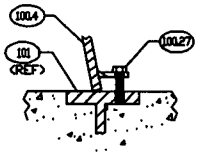

DETAIL K

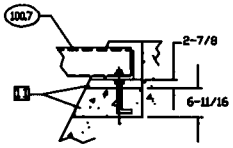

DETAIL J

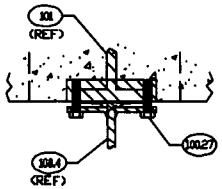

SECTION M-M

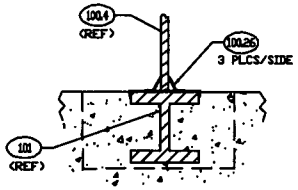

SECTION L-L

5 DETERMINED BY STRUCTURE STABILITY AND CONCRETE STRENGTH.

4 ONE HALF OF TOP VIEW, ALONG WITH SECTION VIEWS SHOWS CONCRETE BLOCKOUTS, WHILE OPPOSITE HALF SHOWS EQUIPMENT INSTALLED.

3 DETAILS FOR GATE INSTALLATION, ADJUSTMENT, AND ALIGNMENT ONLY.

2 F_H = 4400 (lbs); F_V = 3300 (lbs); THRUST FORCES IMPOSED ON STRUCTURE.

1 FILL WITH NON-SHRINK GROUT, SUFFICIENT TO WITHSTAND INDUCED LOADS, AFTER GATE INSTALLED, ADJUSTED, AND ALIGNED.

NOTES FOR THIS SHEET ONLY

THIS DRAWING IS THE PROPERTY OF GOLDEN HARVEST, INC. THE DESIGN, DATA AND INFORMATION CONTAINED WITHIN IS NOT TO BE USED, DISSEMINATED, LOANED OR REPRODUCED IN WHOLE OR IN PART WITHOUT THE WRITTEN CONSENT OF GOLDEN HARVEST, INC.

GOLDEN HARVEST
ORIGINAL
CHECKED
CHECKED
TRACED BY
CUT BY
PLOTTED BY

GH-9000-US139 UPSTREAM LEVEL CONTROL GATE	GOLDEN HARVEST GOLDEN GATES 1-800-338-6238 P.O. BOX 287 Burlington, WA 98233	
Project Description:		Date Drawn:
For:		Revision:
Contractor:		Revision:
Engineer:		Revision:
		G.H. Drawing #: C
Drawn By:	Scale: NTS	Job No.: / Contract Sht #: