COLORADO RIVER BASIN
SALINITY CONTROL PROJECT
Paradox Valley Unit
DEFINITE PLAN REPORT

September 1978

APPENDIX A
DESIGNS AND ESTIMATES

TD
478.5
.C6
P373 D445
1978
App. A

UNITED STATES
DEPARTMENT OF THE INTERIOR
Cecil D. Andrus, Secretary

BUREAU OF RECLAMATION
R. Keith Higginson, Commissioner

TD
478.5
.C6
P373
D445
1978
App. A

BOR Salt Lake City Library
UCR09286

COLORADO RIVER BASIN
SALINITY CONTROL PROJECT

Paradox Valley Unit

DEFINITE PLAN REPORT

September 1978

APPENDIX A
DESIGNS AND ESTIMATES

BUREAU OF RECLAMATION
R.Keith Higginson, Commissioner
UPPER COLORADO REGION
N.W. Plummer, Regional Director

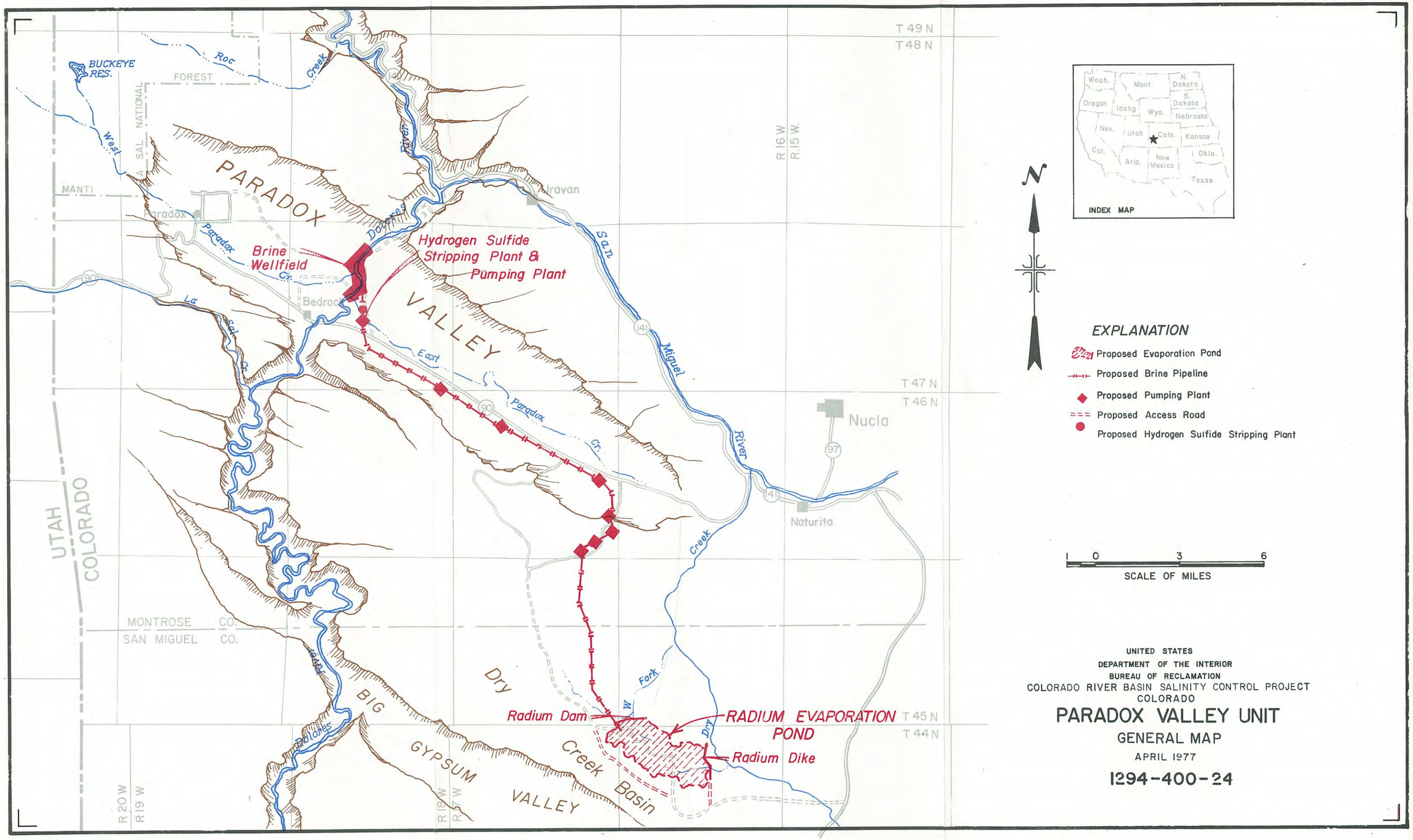

UNITED STATES
DEPARTMENT OF THE INTERIOR
BUREAU OF RECLAMATION
COLORADO RIVER BASIN SALINITY CONTROL PROJECT
COLORADO

PARADOX VALLEY UNIT

GENERAL MAP

APRIL 1977

1294-400-24

SUMMARY SHEETS

Paradox Valley Unit

Colorado River Basin Salinity Control Project

LOCATION

The Paradox Valley Unit would be located in Montrose and San Miguel Counties of southwestern Colorado in the Upper Colorado River Basin.

PLAN

The unit would be designed to reduce the salinity of the Dolores and Colorado Rivers by pumping brine ground water from a well field located along the Dolores River in Paradox Valley and thus preventing it from surfacing in the riverbed. A test well field has already been installed as part of a design data collection program, and other facilities required for brine treatment and disposal would be added during unit construction.

The brine would be piped from the well field to a nearby hydrogen sulfide stripping plant, where potentially toxic and corrosive gas would be converted into sulfur. An operational headquarters would be constructed at the site of the stripping plant. The treated brine and sulfur would be piped from the stripping plant to the proposed Radium Evaporation Pond for disposal. The pond would be located in Dry Creek Basin to the southeast of the well field, and eight pumping plants would be installed on the pipeline to lift the brine over the divide between Paradox Valley and the basin.

To reduce adverse impacts on wildlife, a wildlife area would be developed near the evaporation pond and other areas temporarily disturbed by construction would be seeded with plant species valuable as wildlife habitat. Since the wildlife area was not included in the unit plan when it was authorized, the approval of the appropriate congressional committees would be required. Also included as part of the unit would be a cultural resource program to collect and preserve archaeological information from two sites located within the proposed evaporation pond.

EFFECTS ON COLORADO RIVER (average annual)

Stream depletion (acre-feet)	3,950
Decrease in salt load (tons)	180,000
Effects on salt concentration at Imperial Dam (mg/l)	
Increase from concentrating effect of stream depletion	0.4
Decrease from reduction of salt load	18.6
Net decrease	18.2

ESTIMATED COSTS

Construction costs (January 1977 prices)	
Salinity control	
Brine well field	$1,900,000
Hydrogen sulfide stripping plant	2,300,000
Brine pipeline	5,900,000
Brine pipeline pumping plants	4,800,000
Radium Dam, Dike, and Evaporation Pond	33,000,000
Transmission lines and substations	590,000
Permanent operating facilities	175,000
Operation and maintenance housing	390,000
Capitalized movable equipment	1,010,000
Service facilities	820,000
Depreciation and salvage	-1,570,000
Investigations (Reclamation fund)	456,000
Wildlife mitigation	610,000
Subtotal	50,381,000
Cultural resource program	9,000
Total	50,390,000
Annual equivalent cost of construction	3,175,000
Annual operation, maintenance, and replacement costs (1974-76 prices)	332,300
Total annual costs	3,507,300
Annual equivalent cost per mg/l of net salinity decrease at Imperial Dam	192,700

COST ALLOCATIONS (100-year period at 5 5/8 percent interest)

	Construction costs	Annual operation, maintenance, and replacement costs
Reimbursable costs		
Salinity control facilities	$12,595,000	$84,600
Nonreimbursable costs		
Salinity control facilities	37,786,000	247,700
Cultural resource program	9,000	
Subtotal	37,795,000	247,700
Total	50,390,000	332,300

REPAYMENT OF REIMBURSABLE COSTS (50-year repayment period)

	Construction costs	Annual operation, maintenance, and replacement costs
Lower Colorado River Basin Development Fund	$10,706,000	$70,200
Upper Colorado River Basin Fund	1,889,000	12,400
Colorado Division of Wildlife		2,000
Total	12,595,000	84,600

PROJECT FEATURES

	Number	Depth (feet)	Capacity (cfs)
Wells			
Brine production wells	18	48-155	0.1-1.1
Ground water monitoring wells	68	20-300	
		Length (miles)	
Brine pipeline		20.5	5
Brine pipeline pumping plants	8		5.26
		Radium Dam	Radium Dike
Dams (feet)			
Height above streambed		87	56
Crest length		8,300	7,500
Evaporation Pond			
Capacity (acre-feet)			
Flood control		18,700	
Inactive		62,060	
Dead		6,040	
Total		86,800	
Surcharge		6,540	
Maximum water surface area (acres)		3,750	

Appendixes to the Paradox Valley Unit have been prepared in two volumes with the data grouped as follows.

APPENDIX A
DESIGNS AND ESTIMATES

APPENDIX B
HYDROSALINITY

CONTENTS

		Page
Chapter I	Introduction	1
	Project plan	1
	Location and accessibility	2
	Climate	2
	Physiography and topography	2
	General geology	4
	Development program	5
	Construction costs	5
	Service facilities	5
	Permanent operation facilities	7
	Summary of land acquisition and right-of-way	7
	Cultural resources program	8
Chapter II	Brine well field, monitoring systems, and collection system	9
	Brine well field	9
	Monitoring system	9
	Collection system	12
	Access roads	12
Chapter III	Hydrogen Sulfide Stripping Plant	13
	General	13
	Power supply	13
	Design	13
	Site geology	19
	Construction material	19
Chapter IV	Paradox Valley Brine Pipeline	20
	General	20
	Rights-of-way	20
	Access	20
	Design	20
	Site geology and construction materials	22
Chapter V	Paradox Valley Brine Pipeline Pumping Plants	23
	General	23
	Power supply	23
	Pumping Plant No. 1 (pipeline station 0+00)	23
	Design	23
	Site geology	25
	Pumping Plants 2 through 8	25
	Design	25
	Individual site geology	25
	Pumping Plant No. 2 (pipeline station 194+50)	25
	Pumping Plant No. 3 (pipeline station 360+00)	26
	Pumping Plant No. 4 (pipeline station 539+00)	26

CONTENTS (Continued)

		Page
Chapter V	Paradox Valley Brine Pipeline Pumping Plants (continued)	
	Pumping Plants 2 through 8 (continued)	
	Individual site geology (continued)	
	Pumping Plant No. 5 (pipeline station 626+00)	26
	Pumping Plant No. 6 (pipeline station 639+50)	26
	Pumping Plant No. 7 (pipeline station 677+00)	26
	Pumping Plant No. 8 (pipeline station 718+00)	27
	Construction material	27
	Conclusions and recommendations for site geology	27
Chapter VI	Radium Dam, Dike, and Evaporation Pond	28
	Location and accessibility	28
	Rights-of-way	28
	Relocation and reservoir clearing	31
	General geology	31
	Site geology	31
	Construction materials	33
	Impervious embankment	33
	Pervious embankment	33
	Concrete aggregate	34
	Riprap	34
	Radium Dam	34
	Combined spillway and outlet works	35
	Impervious clay blanket	35
	Radium Dike	35
	Environmental considerations	36
Chapter VII	Transmission lines and substations	37
Chapter VIII	Restoration and conservation program	38
Chapter IX	Operation, maintenance, and replacements	39
	Project operations	39
	Personnel	39
	Project superintendent	39
	Plant mechanics/operators	39
	Electrical equipment repairman	39
	Laborer	40
	Operation and maintenance headquarters and housing	40
	Well field	40
	Hydrogen Sulfide Stripping Plant	42
	Brine pipeline and relift pumping plants	43
	Radium Dam and Evaporation Pond	44
	Power transmission	45
	Wildlife enhancement facilities	45

CONTENTS (Continued)

		Page
Chapter IX	Operation, maintenance, and replacements (continued)	
	Operation, maintenance, and replacements estimate	46
	Personnel	46
	Equipment and costs	46
	Annual supplies	47
	Power	47
	Major replacements	47
	Direct pumping plant operation and maintenance costs	49
	Annual cost summary	49

MAPS, DRAWINGS, AND CHARTS

Paradox Valley Unit, General Map (1294-400-24) . . . . . Frontispiece
Control schedule (PF-2) 6
Brine well field, general layout (1294-400-26) 10
Test well installation (1294-400-36) 11
Hydrogen Sulfide Stripping Plant, perspective (1294-D-11) 14
Hydrogen Sulfide Stripping Plant, site plan (1294-D-9) 15
Hydrogen Sulfide Stripping Plant, floor plan and elevation (1294-D-10) 16
Hydrogen Sulfide Stripping Plant, equipment and piping plan (1294-D-7) 17
Hydrogen Sulfide Stripping Plant, equipment and piping plan (1294-D-8) 18
Brine pipeline, general plan and profile (1294-D-4) 21
Brine Pumping Plant No. 2 (1294-D-3) 24
Reservoir capacity allocations 29
Radium Dam and Dike (1294-D-5) 30
Radium Evaporation Pond, right-of-way 32
Project cost estimate (October 1977) 50-52
Construction cost estimate (October 1977) 53,54
Project cost estimate (May 1977) 54,55
Construction cost estimate (May 1977) 56-75

CHAPTER I

INTRODUCTION

Project Plan

Paradox Valley, located in Montrose County of southwestern Colorado, has been identified as a significant natural contributor to salinity in the Colorado River Basin. The Bureau of Reclamation is conducting a basinwide program to minimize salinity levels in the Colorado River system. The ultimate object would be to limit any further increases in salinity while the Upper Basin States--parts of Utah, Arizona, New Mexico, Wyoming, and Colorado--continue to develop their water resources. Title II of the Colorado River Basin Salinity Control Act (Public Law 93-320) of June 24, 1974, authorized the Secretary of the Interior to construct, operate, and maintain the Paradox Valley Unit. The unit would be part of the Colorado River Basin Salinity Control Project.

The Dolores River, in crossing the valley, picks up an estimated 205,000 tons of salt each year and carries this load to its confluence with the Colorado River. The implementation of measures to control this source could reduce the annual salt inflow by an average 180,000 tons and lower the salinity of the Colorado River by approximately 18.2 milligrams per liter (mg/l) at Imperial Dam near Yuma, Ariz.

The inflow of salt into the river would be substantially reduced by drilling a field of wells into the brine zone on both sides of the river and pumping brine ground water from the wells to lower the interface between the relatively fresh ground water and the underlying brine. The brine would be pumped from the well field to a disposal pond for evaporation.

Characteristics of the brine are as follows:

1. Specific gravity = 1.164
2. Dissolved solids = 260,000 mg/l
3. pH = 6.6
4. Salts in solution = 22.3 percent
5. Dynamic viscosity = 4.38×10^{-10} lb-sec/ft^2 at 50° F
6. Dissolved hydrogen sulfide = 100 mg/l

The Bureau is now conducting a design data collection program for which an environmental assessment and a negative determination have been made. This program, scheduled for completion in 1979, involves the drilling and testing of wells with brine disposal to a temporary pond near the well field, determines the best pumping pattern, and arrives at an accurate overall pumping rate. Initial sizing of major unit facilities has been

based on the extreme condition that a pumping rate of 5 cfs would be necessary from the brine well field. The design data collection program would permit final preconstruction sizing of the Hydrogen Sulfide Stripping Plant, pipeline and pumping plants, and Radium Evaporation Pond.

Radium Evaporation Pond would be located on the West Fork of Dry Creek, a normally dry channel, approximately 8 miles southwest of Naturita, Colo. The brine would be pumped about 20 miles to the evaporation pond. A shallow natural basin at this site would be enclosed by the construction of a dam across an intermittent tributary to the West Fork of Dry Creek and a dike across an intermittent tributary to the East Fork.

Location and Accessibility

The Paradox Valley Unit of the Colorado River Basin Salinity Control Project is located in Montrose and San Miguel Counties in Colorado. The project area extends from the northernmost feature, the brine well field with temporary brine disposal pond, 18 miles northwest of Naturita, Colo., to the southernmost feature, Radium Evaporation Pond, 10 miles southwest of Naturita, Colo. The well field and disposal pond are located in Paradox Valley by the Dolores River. Radium Evaporation Pond would be located in Dry Creek Basin. The overall project area is served from the east and west by State Highway 90, from the east by State Highway 145, and from the north and south by State Highway 141. State and county roads provide access to project features and areas.

Climate

The climate of the project area is temperate and semiarid. Contractors would be able to work through the summer without problems except for infrequent thunderstorms in late July and August. Since the area is semiarid, snow cover during the winter is not deep and the major county roads are kept open year round. Climatological conditions from Norwood and Paradox, Colo., are considered representative of the site. The temperature in Norwood ranges from 99° F in the summer to -33° F during the winter, and the average annual precipitation is about 14 inches. Paradox, Colo., has temperatures ranging from 110° F in the summer to -21° F in the winter. The average annual precipitation is about 11.5 inches. Winds are sometimes persistent in the spring of the year but are seldom violent. The general direction is from the southwest. Weather data for Norwood and Paradox, Colo., are shown on the tables on the following page.

Physiography and Topography

Physiographically, the project lands are in the Paradox Fold and Fault Belt of the Colorado Plateau Province. The project area is a

Norwood, Colo., weather data, 1942-72
Elevation 7,017 feet
(Unit--°F)

Month	Monthly mean	Highest	Lowest	Precipitation (monthly mean) (inches)
January	22.2	62	-33	0.85
February	27.1	60	-23	.85
March	33.3	70	-15	1.10
April	42.8	82	-14	1.09
May	51.4	97	8	.90
June	60.0	99	22	.89
July	66.1	95	33	1.59
August	63.9	93	29	1.98
September	56.9	90	15	1.41
October	46.6	78	1	1.57
November	32.0	67	-9	.97
December	24.6	56	-18	1.05
Annual	43.9	99	-33	14.25

Paradox, Colo., weather data, 1943-73
Elevation 5,309 feet
(Unit--°F)

Month	Monthly mean	Highest	Lowest	Precipitation (monthly mean) (inches)
January	27.2	63	-21	0.91
February	33.9	72	-16	.75
March	39.6	79	0	.64
April	49.0	87	0	.79
May	58.0	96	13	.74
June	66.7	110	26	.68
July	73.6	104	38	1.10
August	71.1	104	29	1.69
September	62.8	99	24	.89
October	51.8	90	5	1.37
November	37.8	74	-10	.90
December	29.0	66	-18	1.02
Annual	50.0	110	-21	11.48

region of generally flat lying or gently warped sedimentary formations eroded into high-cliffed mesas and deep-walled canyons and is structurally composed of long, summit-eroded anticlines, large monoclines, faults, and several small laccolithic mountain domes. The Paradox Fold and Fault Belt in the eastern portion of this region is a tectonic belt of en echelon folds and faults which trend toward the northwest. In this belt several elongated, salt-pierced anticlines have been faulted and eroded into deep-walled, graben valleys which are flanked by the adjoining synclinal valleys. Paradox Valley, where the project site is located, is such a graben, anticlinal valley trending toward the norhtwest. Surrounding this valley are the laccolithic La Sal Mountains to the west, the Uncompahgre Uplift to the north, the San Miguel Mountains to the east, and the Dry Creek Basin synclinal valley to the south.

The entire State of Colorado is considered a region of minor seismicity. A number of earthquake epicenters are known in the San Juan Mountains about 45 miles to the east, but the magnitudes are all small. No epicenters are known at the sites.

The project site lies within Paradox Valley, an elongated but relatively broad valley bounded by steep canyon walls, and in the northwestern portion of Dry Creek Basin, which is relatively shallow and a gently sloping area. The elevation of the area of the well field is approximately 4,940 feet. The highest point that the brine pipeline to Radium Evaporation Pond would pass over is 6,995 feet in elevation. The area of Radium Evaporation Pond is approximately at elevation 6,300 feet.

General Geology

The Morrison Formation of the Jurassic Period, the Culter Formation of the Permian Period, and the Hermosa Formation of the Pennsylvanian Period are all exposed in outcrops in the project area. Several other formations are exposed along the Paradox Valley canyonside.

The Morrison Formation is a nonmarine deposit of variegated red, blue, and green bentonitic shale and mudstone interbedded with dark chert-pebble conglomerate, thin beds of sandstone, and limestone; the lower member contains white to buff, fine- to medium-grained, massive, cross-bedded sandstone, interbedded with variegated shale and mudstone as in the upper member. Uranium-vanadium deposits in this formation are currently being mined west of the canyonside pumping plant sites.

The Cutler Formation consists of maroon, red, light-red mottled and purple conglomerate, arkose, and arkosic sandstone with thin beds of sandy mudstone.

The Hermosa Formation contains an upper gray fossiliferous limestone member with thin beds of shale and minor arkose; the lower member is

interbedded sandstone, arkose, carbonaceous shale, limestone, gypsum, anhydrite, and salt. Due to its high soluble mineral content and its sometimes soft, weak consistency, this formation should be avoided as a construction foundation.

Paradox Valley is one of five major collapsed salt anticlines in southwestern Colorado and southeastern Utah. A northwest-southeast trending, elongated valley about 24 miles long and from 3 to 5 miles wide has been formed by the erosion of faulted and uplifted sandstone and shale formations. This process has exposed a residual gypsum cap which covers up to 14,000 feet of relatively pure salt and salt-rich shale. The emergence of mountainous uplifts on each side of the area has placed intense lateral pressures on the intervening sedimentary formations, resulting in faulting and fracturing along weak axial zones. Under these pressures and the weight of the overlying strata, a deeply buried layer of salt-rich material has flowed upward into the faulted area to create an anticline. The Dolores River has remained in its original streambed during this time and, in combination with other erosional forces, has removed the collapsing upper materials to form the valley. Contributing to the collapse has been the constant dissolution and removal of the underlying salt bed by ground water. These processes are still active.

Development Program

A 6-year period will be necessary for the design data collection program and the construction of permanent operating facilities. The proposed program is shown on the Control Schedule (PF-2) on the following page.

Construction Costs

The Paradox Valley Unit of the Colorado River Basin Salinity Control Project is estimated to cost $50,390,000 on the basis of feasibility estimates which are summarized on pages 50 through 75. The cost estimates are based on October 1976 price levels and indexed to January 1977 price levels.

Service Facilities

Construction of permanent facilities for the Paradox Valley Unit will require construction camp facilities. The government construction camp facilities would be located in the vicinity of the Hydrogen Sulfide Stripping Plant and permanent operating facilities' site. A maximum of 17 mobile homes would be used and would be all electric. Power is available from existing lines. A 2,000-foot telephone line would be installed from an existing line. A well for water would be drilled near the rimrock

LEGEND: Types of Activity

Preconstruction and Other Work — Construction

LINE NO.	PROGRAM ITEM	QUANTITY	ESTIMATED TOTAL	TOTAL TO SEPT. 30, 1977	FISCAL YEARS 1978	1979	1980	1981	1982	1983	BALANCE TO COMPLETE	LINE NO.
	1	2	3	4	5	6	7	8	9	10	11	
1	CONSTRUCTION PROGRAM											1
2	Brine Well Field	23 Wells	1,900,000	173,243	542,920	263,000	250,000	211,000	230,000	229,837		2
3	Hydrogen Sulfide Stripping Plant	5 Cfs	2,300,000	58,110	200,000	200,000	200,000	500,000	700,000	441,890		3
4	Brine Pipeline	20.5 Mi.	5,900,000	334,282			300,000	1,150,000	2,350,000	1,765,718		4
5	Brine Pipeline Pumping Plants	5 Cfs	4,800,000	721,253			300,000	1,000,000	1,700,000	1,078,747		5
6	Radium Dam, Dike and Evaporation Pond	86,800 AF	33,000,000	576,960	600,000	1,750,000	4,510,000	8,000,000	12,000,000	5,563,040	← Initial Storage	6
7	Transmission Lines and Substations		590,000					40,000	300,000	250,000		7
8	Permanent Operating Facilities		595,000	25,423	10,000	20,000	50,000	100,000	200,000	189,577		8
9	O&M Housing		390,000				50,000	100,000	240,000			9
10	Temporary Camp		420,000			40,000	250,000	130,000				10
11	Service Facilities, Depreciation and Salvage		-580,000	21,408	20,000	85,000	430,000	260,000	-270,000	-1,126,408		11
12	TOTAL CONSTRUCTION COST		49,315,000	1,910,679	1,372,920	2,358,000	6,340,000	11,491,000	17,450,000	8,392,401		12
13	Other Project Costs 2/		1,075,000	455,600			360,000	109,000	150,000	400		13
14	TOTAL PROJECT COST		50,390,000	2,366,279	1,372,920	2,358,000	6,700,000	11,600,000	17,600,000	8,392,801		14
15	Consolidated Expenditures and Credits		-479,000	-468,154						-10,846		15
16	TOTAL EXPENDITURES		49,911,000	1,898,125	1,372,920	2,358,000	6,700,000	11,600,000	17,600,000	8,381,955		16
17	Undelivered Orders			37,511	-37,511							17
18	TOTAL OBLIGATIONS 1/		49,911,000	1,935,636	1,335,409	2,358,000	6,700,000	11,600,000	17,600,000	8,381,955		18
19	Funds Available				1,335,409							19
20	Funds Required					2,358,000	6,700,000	11,600,000	17,600,000	8,381,955		20
21												21
22												22
23												23
24												24
25												25

NOTES:
1. Definite Plan Report scheduled for submission December 1977.
2. Repayment Contract - none required.
3. Land Certification - none required.
4. Draft Environmental Statement - scheduled for filing with Council on Environmental Quality March 1978.
5. Salinity Reduction - 180,000 tons/year.

1/ Total to September 30, 1977, includes $1,280,133 advance planning funds.

2/ Includes the cost of mitigation not yet authorized to reduce the effect of the project on wildlife.

RECOMMENDED: _____ (Operating Office Head) _____ (Date)

RECOMMENDED: _____ (Regional Director) _____ (Date)

RECOMMENDED: _____ (Chief, Div. of P C & F) _____ (Date)

APPROVED: _____ (Commissioner) _____ (Date)

REVISED: _____ (Date)

SHEET 1 OF 1 SHEETS

PF-2 (3-76)

UNITED STATES
DEPARTMENT OF THE INTERIOR
Bureau of Reclamation

CONTROL SCHEDULE

COLORADO RIVER BASIN SALINITY CONTROL PROJECT

PARADOX VALLEY UNIT

Durango, Colorado (OFFICE) — Dec. 7, 1977 (DATE) — UC (REGION)

☐ GENERAL INVESTIGATIONS ☐ LOAN PROGRAM
■ CONSTRUCTION ☐ OTHER

hill. A septic system would be installed which could be used later for the permanent operating facilities.

Equipment yards would be required for storing the contractor's equipment and later for operation and maintenance equipment. Facilities for laboratories and for concrete and embankment testing during construction would be made available at these sites.

Permanent Operation Facilities

Supervisory control headquarters and shop facilities for the Paradox Valley Unit would be located at the proposed hydrogen sulfide plant and first pumping plant. Homes would be provided close to this site for four permanent operating personnel and their families.

Summary of Land Acquisition and Right-of-Way

The following table is a summary of land acquisition and right-of-way for all features of the Paradox Valley Unit. Where an explanation of the different tracts of land is needed, it will be covered in the chapter concerned with that feature.

Summary of land acquisition and right-of-way
(Unit--acres)

	Private				
Feature	Fee acquisition	Easement	Temporary easement	Public land withdrawal	Total
Brine well field	285	20		60	365
Hydrogen Sulfide Stripping Plant	6				6
Brine pipeline		37	37	125	199
Brine pipeline pumping plants	2			5	7
Radium Dam, Dike, and Evaporation Pond	3,700			1,250	4,950
Uneconomical unit at Radium	830				830
Permanent operating facilities1/					
Operation and maintenance housing	4				4
Wildlife area	1,290			1,050	2,340
Construction materials				20	20
Total	6,117	57	37	2,510	8,721

1/ Land acquisition for permanent operation facilities is included with Hydrogen Sulfide Stripping Plant and Pumping Plant No. 1 acquisition.

Cultural Resources Program

While working under a contract with the Bureau of Reclamation, an archaeologist from Fort Lewis College identified 22 archaeological sites within the area of unit influence. The proposed locations of facilities have been adjusted to avoid 20 of the sites, and a program of data collection and evaluation would be conducted for the other 2 sites. Funding for this program has been included in the construction budget under other project costs. At one site, an area of prehistoric lithic scatter in the proposed evaporation pond, the program would consist of collecting materials from the surface, testing for the depth of the materials, and determining cultural affiliations if possible. The second site, the remains of a homestead ranch, is also located within the proposed pond area. The program for this site would consist of gathering historical information and mapping and photographing the site. If the results were to indicate that either site would yield significant information, a mitigation program would be developed and undertaken before construction. Should the sites be determined eligible for inclusion in the National Register of Historic Places, the Bureau of Reclamation will comply with Section 106 of the National Historic Preservation Act of 1966 by following the "Procedures for the Protection of Historic and Cultural Properties," (36 CFR Part 800).

The Bureau of Reclamation intends to mitigate the impact of the project on any significant cultural resource property located as a result of construction. Sites located during construction will be evaluated by an archaeologist or other appropriate professional. A determination will be made in consultation with the Office of the State Archaeologist of Colorado or the State Historic Preservation Officer, as appropriate, regarding the property's eligibility for inclusion in the National Register of Historic Places. Should the property be eligible, 36 CFR 800 would be followed.

CHAPTER II

BRINE WELL FIELD, MONITORING SYSTEMS, AND COLLECTION SYSTEM

Brine Well Field

The brine well field, located in the north-central portion of the Paradox Valley on the Dolores River, would consist of ten wells on the west side of the river and eight on the east side as shown in the figure on the following page. After the well field is in operation, more wells may be drilled if they would make the operation of the well field more efficient and economical.

Seventeen of the 18 wells would be drilled to various depths ranging from 48 to 77 feet. Each of these wells would have a screen length from 15 to 40 feet, depending on the location and depth of the well. The screens would be surrounded by a gravel pack. The wells would be designed to pump brine from a permeable fine sand and gravel aquifer.

The 18th well would be drilled to a depth of 155 feet to pump from cavities found in the residual gypsum cap. The wells would be designed to give a combined pumping rate of up to 5 cfs. The actual combined pumping rate would be determined by the design data collection program.

A concrete pad would be set around each well with a concrete protective housing to prevent damage from floods, vandalism, and the weather. Each concrete housing would be about 8 feet high with a removable roof to facilitate servicing the pumps.

If the investigation program shows that more than 18 wells are needed or if some wells are not productive, the unit cost estimates include provisions for installing 5 additional wells. A typical brine well is shown on Drawing 1294-400-36.

Monitoring System

An electric control panel and observation pipes, both inside and outside the well casing, would be provided at each well. Also a sampling tap would be provided at each well to monitor the quality of the brine being pumped. If too much freshwater is being pumped, the pumping rate would be decreased so that the wells would be drawing as much brine as possible while still effectively lowering the freshwater-brine interface.

A number of piezometer and observation wells would be installed in the well field in addition to those already in place to determine the

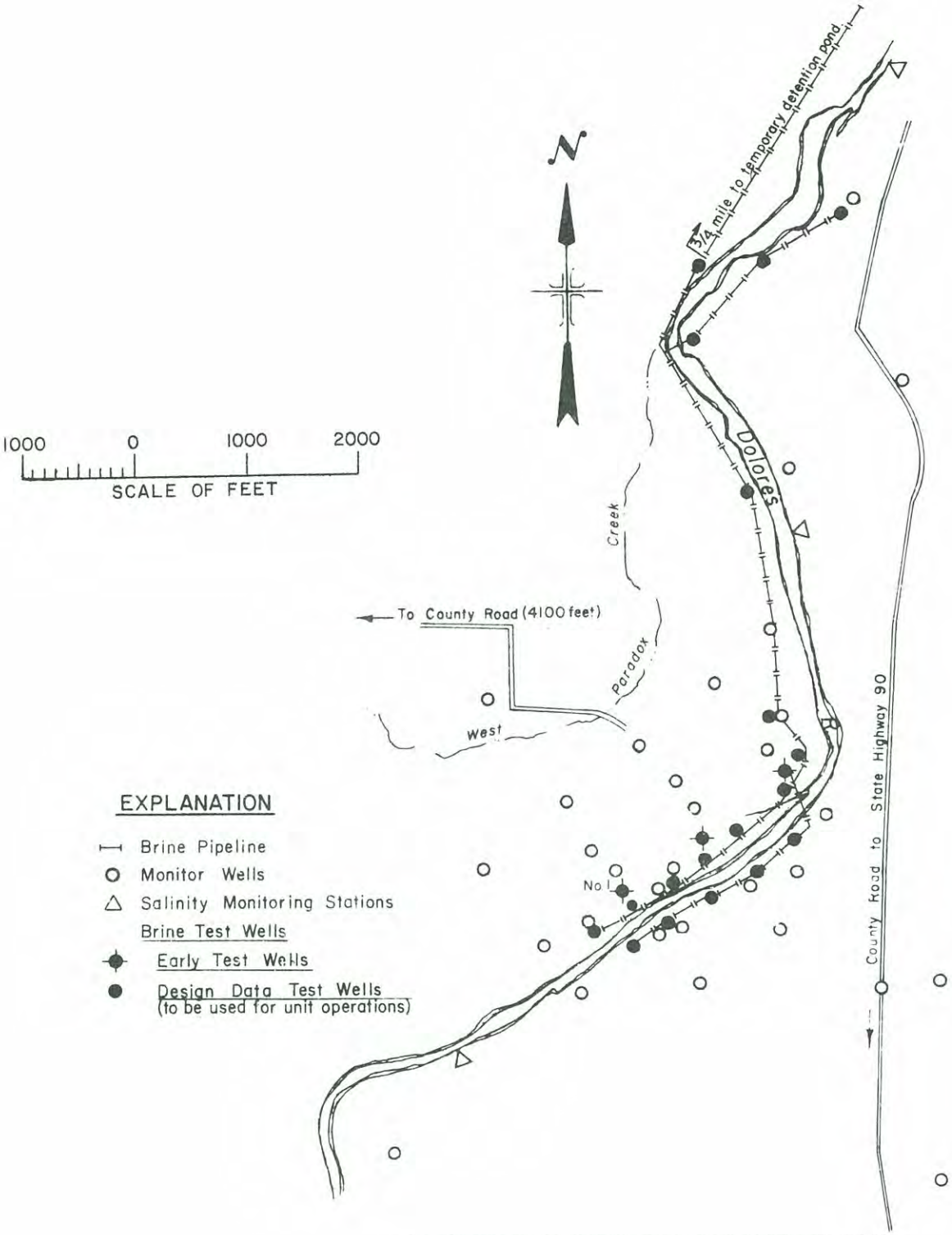

COLORADO RIVER BASIN SALINITY CONTROL PROJECT
PARADOX VALLEY UNIT ~ COLORADO

BRINE WELL FIELD
GENERAL LAYOUT
1294-400-26

NOTE: Power pole and electrical connection are not shown in plan

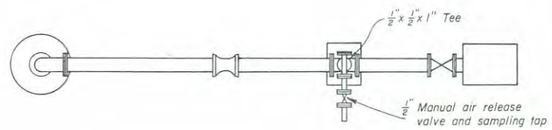

PLAN AT TEST WELL 2C1A

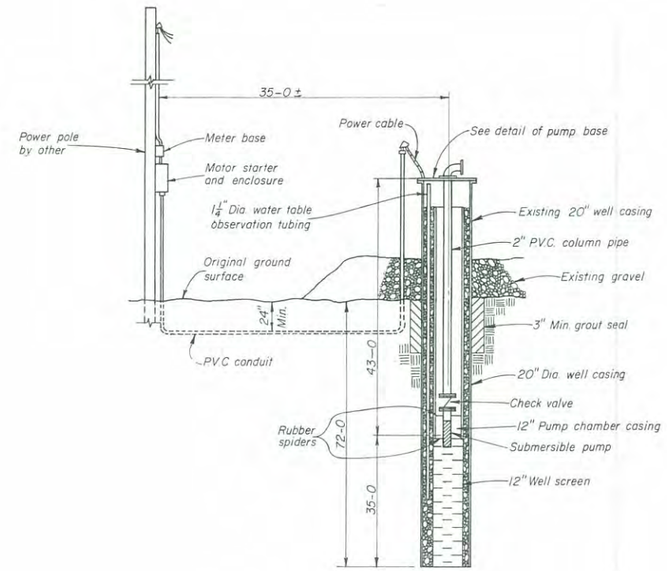

ELEVATION AT TEST WELL 6W

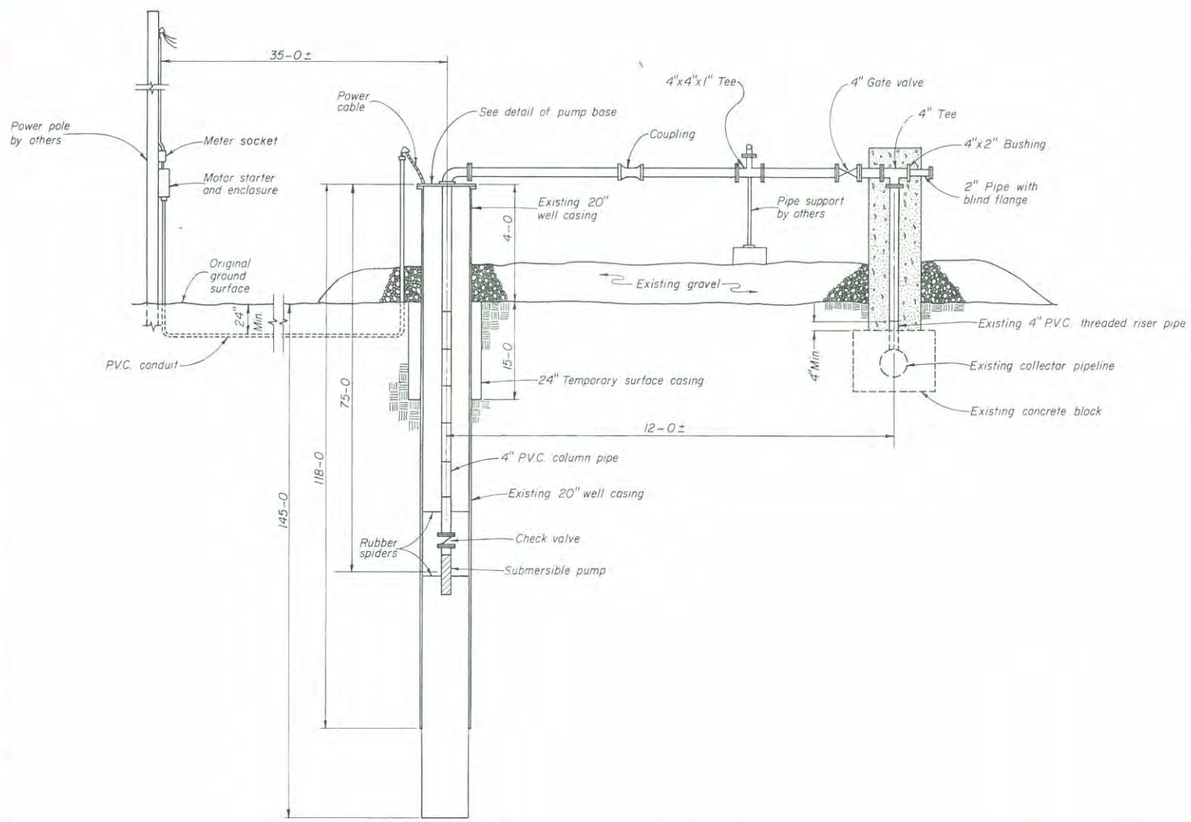

ELEVATION AT TEST WELL 2C1A

NOTE: Bolt pump base to existing casing flange. Drill pump base in field to suit flange bolt hole pattern

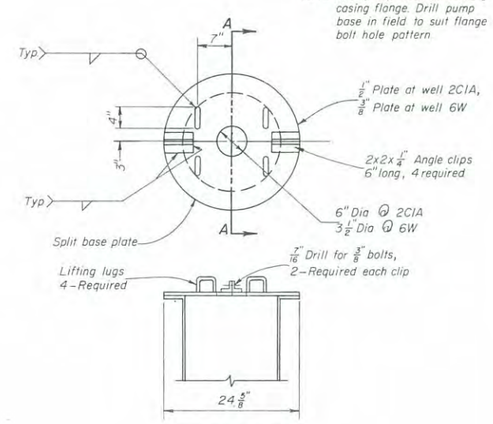

SECTION A-A

DETAIL OF PUMP BASE

ALWAYS THINK SAFETY

UNITED STATES
DEPARTMENT OF THE INTERIOR
BUREAU OF RECLAMATION

PARADOX VALLEY UNIT—COLORADO
COLORADO RIVER BASIN SALINITY CONTROL

TEST WELL INSTALLATION
2C1A AND 6W

DESIGNED _____ TECHNICAL APPROVAL _____
DRAWN Casey Nielson SUBMITTED _____
CHECKED Kenneth E. Peterson ADMIN. APPROVAL _____ REGIONAL _____
SALT LAKE CITY, UTAH JULY 25, 1978 1294 -

profile of the ground water and the interface separating the freshwater from the brine. The piezometer would measure the piezometric head at selected points in the aquifer, while the water table observation wells would be used to measure the elevation of the top of the water table. The approximate elevation of the brine-freshwater interface can also be measured in the observation wells using an electrical conductivity meter. A few of the wells would have continuous recorders installed to monitor changes in the ground water system, while the other wells would be checked periodically by operational personnel. The data collected from the observation wells would help the pump operator adjust the pumps to their optimum pumping rate, minimizing the pumping of freshwater.

The river would also be monitored by five electrical conductivity meters which would be located on the east side of the river above, at, and below the well field to determine the overall effectiveness of the brine removal in addition to stream gaging stations both above and below the valley.

Collection System

Buried pipelines on both sides of the Dolores River would collect brine from the wells along the river. The pipelines would be connected into a larger buried pipeline to convey the brine from the well field to the Hydrogen Sulfide Stripping Plant.

Access Roads

An existing gravel road would provide access to the portion of the well field located west of the river. Another existing gravel road would provide access to the north end of the portion of the well field on the east side of the river. This road would be extended to provide access to the remaining wells to the east of the river. The extension would be approximately 1 mile of all-weather gravel roads which would require minor repairs after major flooding conditions occur in the river.

CHAPTER III

HYDROGEN SULFIDE STRIPPING PLANT

General

The proposed Paradox Valley Hydrogen Sulfide Stripping Plant would remove the toxic hydrogen sulfide gas from the brine pumped out of the brine well field near the Dolores River in Paradox Valley. The brine would be pumped from the well field directly to the hydrogen sulfide plant where the stripping process would occur. The treated brine would then be pumped through a pipeline approximately 20 miles long which would empty into the proposed Radium Evaporation Pond. The drawings of the Hydrogen Sulfide Stripping Plant layout and design are shown on pages 14 through 18.

Power Supply

The power required for the operation of the stripping plant would be supplied by a 46-kV powerline which parallels State Highway 90 along the floor of Paradox Valley. The powerline parallels the highway in the valley floor from the Monogram Substation to Bedrock, Colo. The powerline is owned by the San Miguel Power Association. Colorado Ute Electric Association would handle the wheeling service for the CRSP power to San Miguel Power Association's powerlines.

Design

The Hydrogen Sulfide Stripping Plant would be located adjacent to Pumping Plant No. 1. The stripping process would be accomplished by an air oxidation system consisting of four coal-tar, epoxy-lined, steel aeration tanks; a nickel sulfate ($NiSO_4$) catalyst injection system; and an air compressor/filtration system. The reaction system would consist of a series of six to eight micron porous dome distributors located at the bottom of the tank. Each tank would have a water capacity of approximately 10,000 gallons. The nickel sulfate storage and transition hoppers would have a combined capacity of about 373 cubic feet, which is approximately a 1-year supply.

Brine would flow into the plant at the maximum rate of 5 cfs through a 10-inch-diameter pipe from the brine well field. Inside the plant, the unfiltered brine would flow into the four aeration tanks. Prior to entering the tanks, 2 parts per million of nickel sulfate would be added to the brine as a reaction catalyst in the conversion of hydrogen sulfide to elemental sulfur by air oxidation. Approximately 700 cubic feet per minute (cfm) of compressed, dried, and filtered air at 20 pounds per square inch would be distributed to the aeration tanks and passed through porous

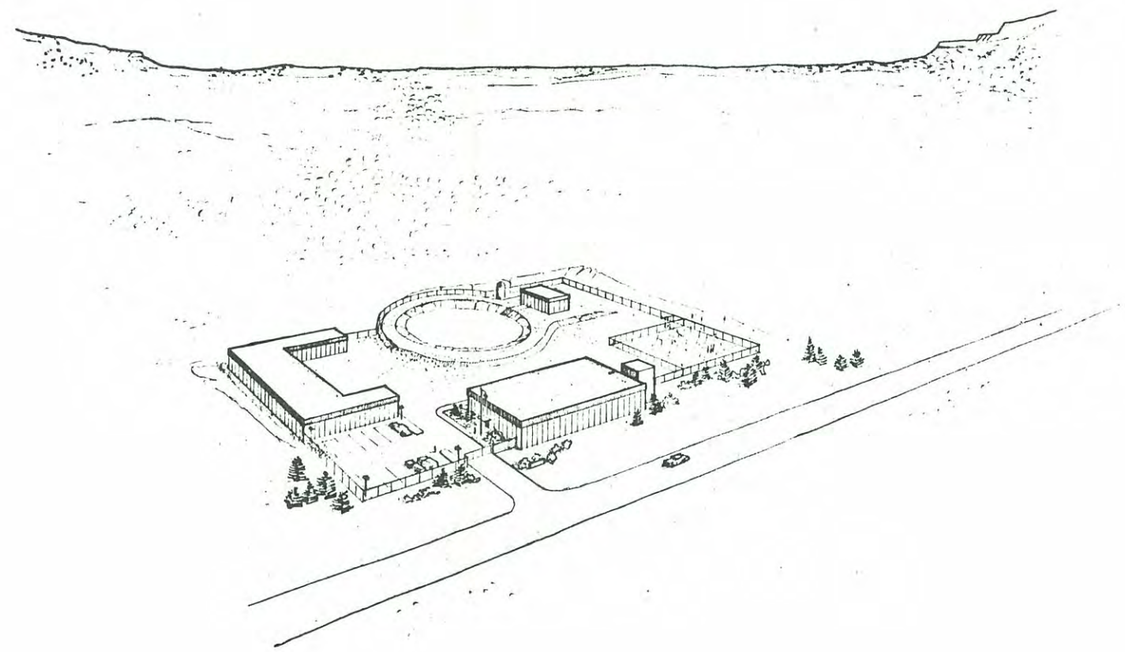

ALWAYS THINK SAFETY

UNITED STATES
DEPARTMENT OF THE INTERIOR
BUREAU OF RECLAMATION
COLORADO RIVER BASIN SALINITY CONTROL PRO
POINT SOURCE DIVISION
PARADOX VALLEY UNIT - COLORADO
HYDROGEN SULFIDE STRIPPING PLA
AERATION PROCESS
PERSPECTIVE
FEASIBILITY STUDY LAYOUT

DESIGNED Paulette M. Payne SUBMITTED Dwight L. G
DRAWN Paulette M. Payne RECOMMENDED
CHECKED Paul V. Butler APPROVED
DIRECTOR OF DESIGN AND

DENVER, COLORADO APRIL 5, 1977 | 1294-D-

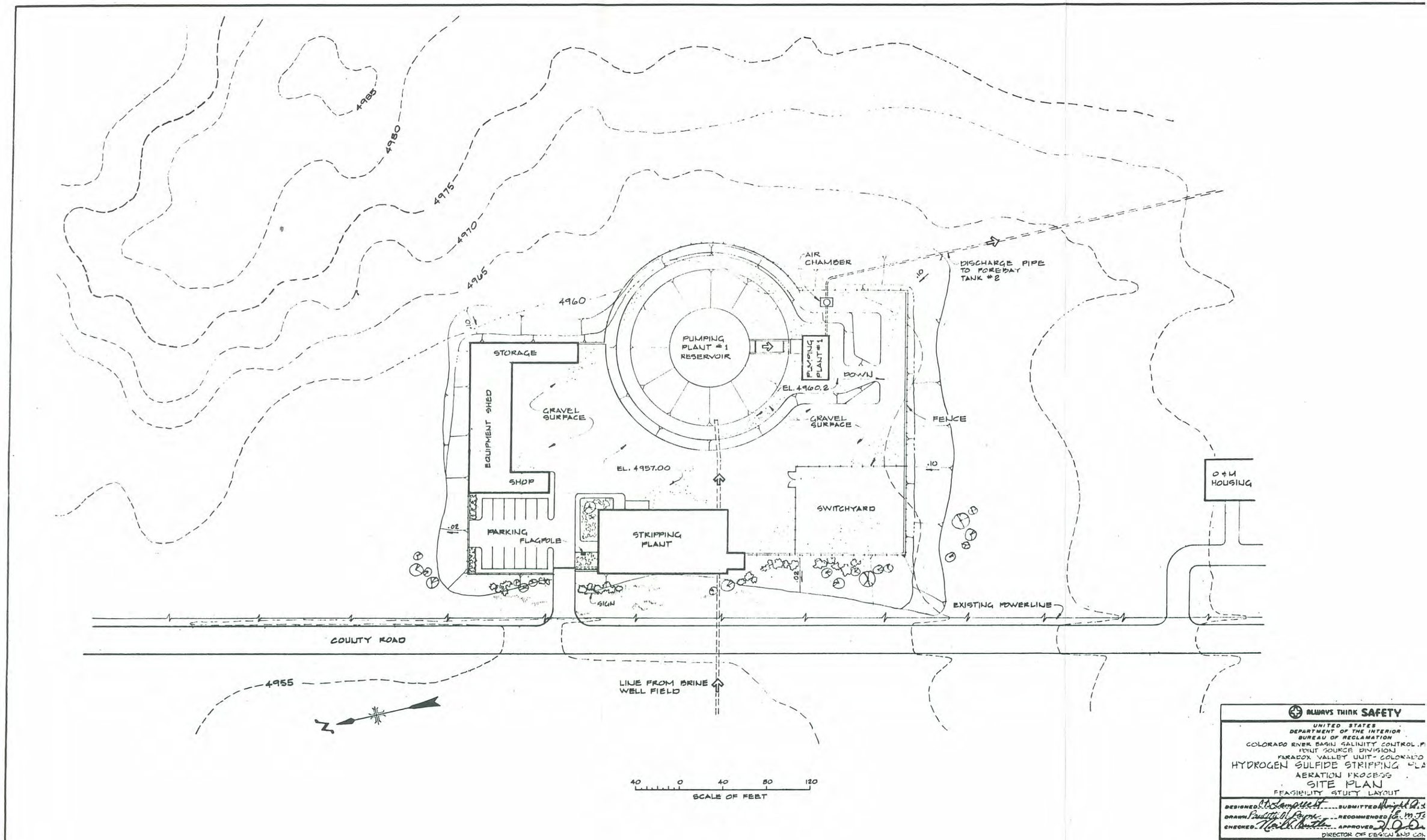

ALWAYS THINK SAFETY

UNITED STATES
DEPARTMENT OF THE INTERIOR
BUREAU OF RECLAMATION
COLORADO RIVER BASIN SALINITY CONTROL PROJECT
POINT SOURCE DIVISION
PARADOX VALLEY UNIT - COLORADO

HYDROGEN SULFIDE STRIPPING PLANT
AERATION PROCESS
SITE PLAN
FEASIBILITY STUDY LAYOUT

DESIGNED C. Lamoreaux SUBMITTED Wright A. [illegible]
DRAWN Paulette A. Payne RECOMMENDED E. M. [illegible]
CHECKED [illegible] APPROVED [illegible]
DIRECTOR OF DESIGN AND CONSTRUCTION

DENVER, COLORADO APRIL 5, 1977 1294-D

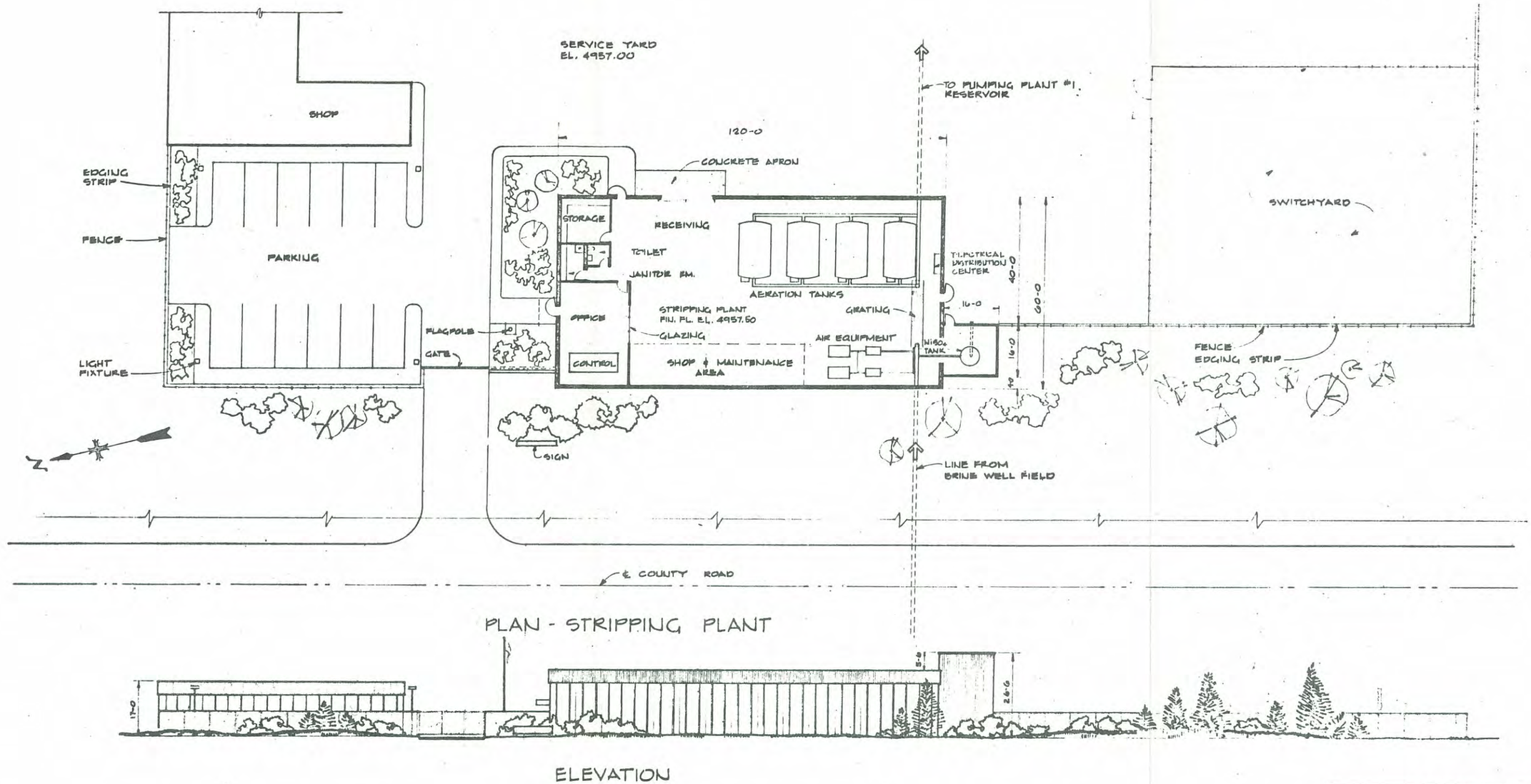

ALWAYS THINK SAFETY

UNITED STATES
DEPARTMENT OF THE INTERIOR
BUREAU OF RECLAMATION
COLORADO RIVER BASIN SALINITY CONTROL PROJECT
POINT SOURCE DIVISION
PARADOX VALLEY UNIT - COLORADO

HYDROGEN SULFIDE STRIPPING PLANT
AERATION PROCESS
FLOOR PLAN AND ELEVATION
FEASIBILITY STUDY LAYOUT

DESIGNED Judith M. Pryor SUBMITTED
DRAWN Judith M. Pryor RECOMMENDED
CHECKED APPROVED
DIRECTOR OF DESIGN AND CONSTRUCTION

DENVER, COLORADO APRIL 6, 1977 1294-D-

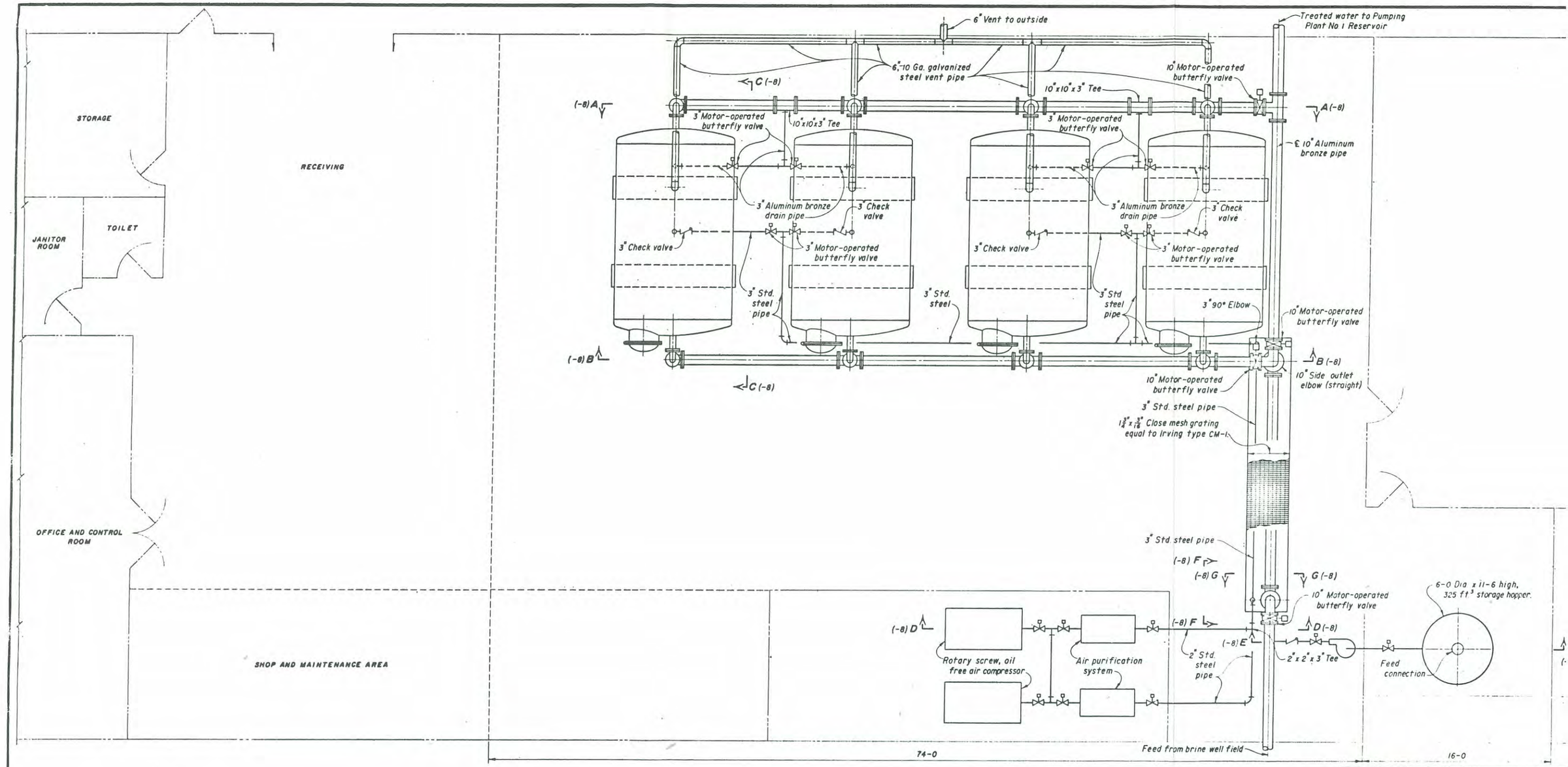

PLAN

LIST OF DRAWINGS

FEASIBILITY DESIGN LAYOUT
SHEET 1 OF 2 ..... 1294-D-7
SHEET 2 OF 2 ..... 1294-D-8

REFERENCE DRAWING

FLOOR PLAN AND ELEVATION 1294-D-10

ALWAYS THINK SAFETY

UNITED STATES
DEPARTMENT OF THE INTERIOR
BUREAU OF RECLAMATION
COLO. RIVER BASIN SALINITY CONTROL PROJECT
POINT SOURCE DIVISION
PARADOX VALLEY UNIT-COLORADO

HYDROGEN SULFIDE STRIPPING PL

AERATION PROCESS

EQUIPMENT AND PIPING-PLAN
FEASIBILITY DESIGN LAYOUT

DESIGNED ..... SUBMITTED .....
DRAWN ..... RECOMMENDED .....
CHECKED ..... APPROVED .....
DIRECTOR OF DESIGN AND CO

DENVER, COLORADO APRIL 5, 1977 SHEET 1 OF 2 | 1294-D

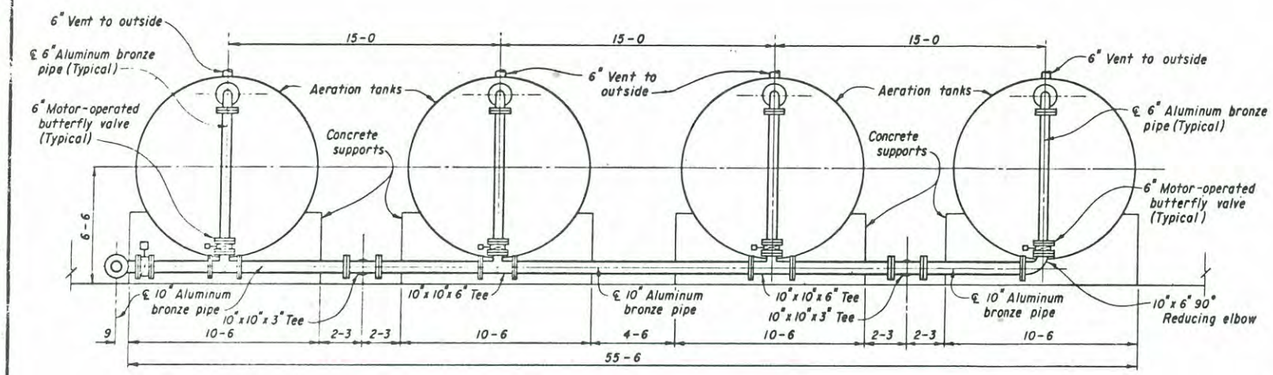

SECTION A-A (-7)

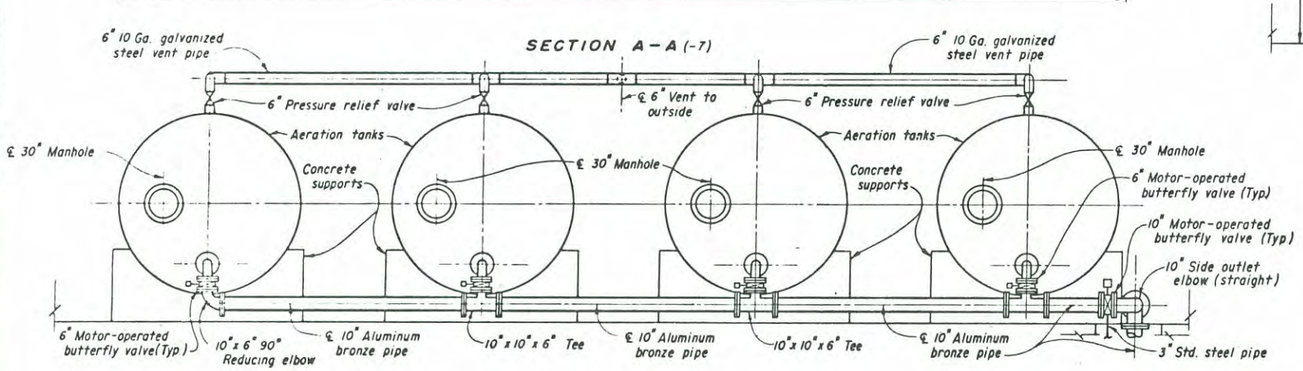

SECTION B-B (-7)

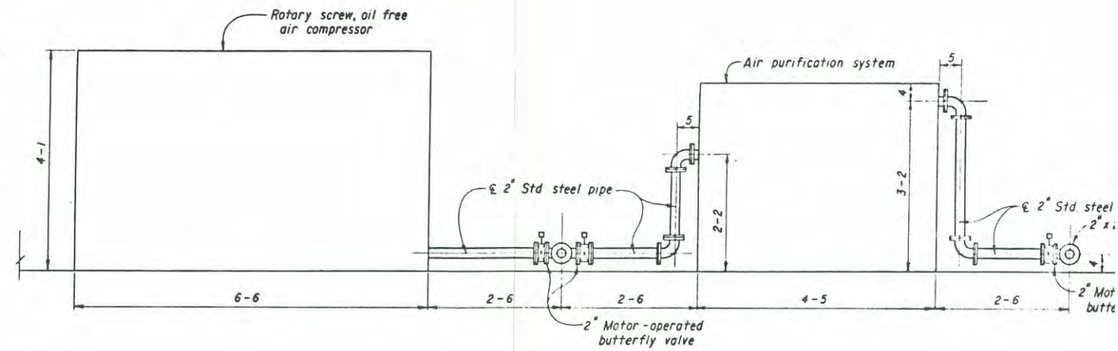

SECTION D-D (-7)

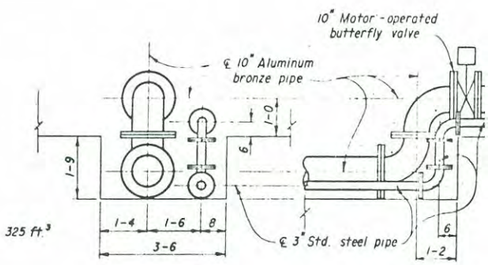

SECTION G-G (-7)

SECTION F-F (-7)

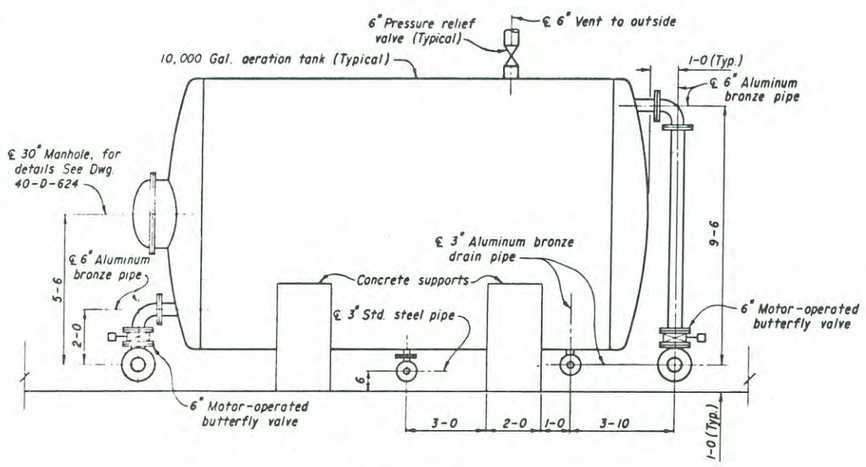

SECTION C-C (-7)

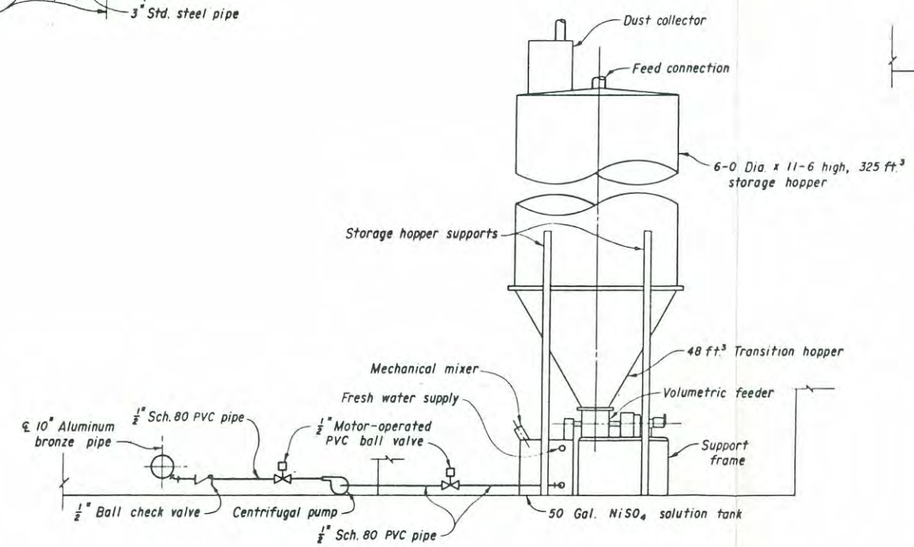

SECTION E-E (-7)

ALWAYS THINK SAFETY

UNITED STATES
DEPARTMENT OF THE INTERIOR
BUREAU OF RECLAMATION
COLO. RIVER BASIN SALINITY CONTROL PROJE
POINT SOURCE DIVISION
PARADOX VALLEY UNIT-COLORADO

HYDROGEN SULFIDE STRIPPING PL

AERATION PROCESS

EQUIPMENT AND PIPING-PLAN
FEASIBILITY DESIGN LAYOUT

DESIGNED E. K. Wilson SUBMITTED
DRAWN E. O. Hoggan RECOMMENDED
CHECKED APPROVED
DIRECTOR OF DESIGN AND

DENVER, COLORADO APRIL 5, 1977 SHEET 2 OF 2

1294-D

domes. There would be 92 domes in each tank or a total of 368 domes in all 4 tanks (426 square feet total dome area). An "overpressure" relief valve on each tank would automatically discharge any high pressure air and/or gases to the outside atmosphere through a galvanized steel pipe manifold vent.

Aluminum bronze piping was selected for the stripping plant because of its resistance to corrosion and pitting in salt water service. This was confirmed with coupon tests, using Paradox Valley well water. The pipes would maintain a maximum flow velocity of 9 feet per second and a minimum feed water pressure of 20 pounds per square inch. Most piping inside the building would be located above the floor to facilitate inspection and maintenance access. The effluent, 5 cfs from the plant, would flow to the Pumping Plant No. 1 forebay reservoir via a 15-inch-diameter aluminum bronze pipe. PVC pipes and valves (½ inch in diameter) would be used for nickel sulfate solution transport to the point of injection into the influent water stream. Compressor air supply lines would be standard 3-inch-diameter steel pipe with an aluminum bronze valve at the point where the air line would attach to the tanks to prevent the corrosive water under pressure from entering the air line.

The control system is designed for fully automatic operation. The system would consist of one Remote Terminal Unit (RTU) with microprocessor in the equipment area. Two minicomputers would be located in the office control area; one would serve as a backup to the other.

Site Geology

The proposed Hydrogen Sulfide Stripping Plant site is located on a nearly level, sagebrush-covered terrain at elevation 4,956 feet. Hand augering penetrated 5.9 feet of silty sand which then changes rather abruptly into lean clay. Lean clay continued to a depth of 10.2 feet where salt and gypsum appeared. Silty sand again appears at 13.1 feet which indicates that the salt and gypsum are of secondary origin. Augering was stopped by a hard, coarse, detrital material at 14.7 feet, of which no sample could be obtained.

Construction Material

The nearest source of sand and gravel for concrete aggregate would be the Dolores River deposits which are only a haul distance of about 2 miles from Pumping Plant No. 1. There is an existing gravel pit being used by the county just about 1,000 feet south of the Bedrock Bridge on State Highway 90. Care must be exercised to avoid using stream deposits north of the bridge because of contamination of sodium chloride salt.

CHAPTER IV

PARADOX VALLEY BRINE PIPELINE

General

The Paradox Valley Brine Pipeline would convey brine from the proposed holding reservoir for Pumping Plant No. 1 in Paradox Valley to the proposed Radium Evaporation Pond in Dry Creek Basin. The brine would be pumped from an elevation of 4,950 feet through 14.3 miles of pipe to an elevation of 6,995 feet at a design rate of 5 cfs. Gravity flow would transmit the brine through the remaining 6.2 miles of pipeline to an outlet elevation of 6,327 feet at Radium Evaporation Pond. The brine pipeline general plan and profile is shown in the drawing on the following page.

Rights-of-Way

An 80-foot easement (40 feet each side) would be required for construction along the entire pipeline. This would be a total of 199 acres for construction. A 40-foot right-of-way would be needed for operation, maintenance, and replacement of the pipeline through the private land which would reduce the right-of-way area to 162 acres for operation after construction is concluded. Private lands make up 74 acres of the construction easement land, and the remaining 125 acres are public lands owned by the Bureau of Land Management.

Access

The first 55,900 feet of the brine pipeline would lie on the floor of the Paradox Valley and would be easily accessible by State Highway 90. The next 19,700 feet of pipeline would scale the valley wall and would be crossed in several places by a heavy-duty county road, making easy access. The last 32,900-foot section of pipeline would run from the top of the valley wall and down into Dry Creek Basin. There are some existing low-grade roads that could serve for access to this section of pipeline.

Design

The Paradox Valley Brine Pipeline would be designed to carry brine from the proposed Pumping Plant No. 1 at a rate of 5 cfs to the proposed outlet at Radium Reservoir, giving a total length of pipeline about 20.5 miles. Eight pumping plants would lift the brine 2,040 feet from the valley floor to the top of the valley wall. Each pumping plant would have a total dynamic lift of 275 feet (brine head) except Pumping Plant No. 1

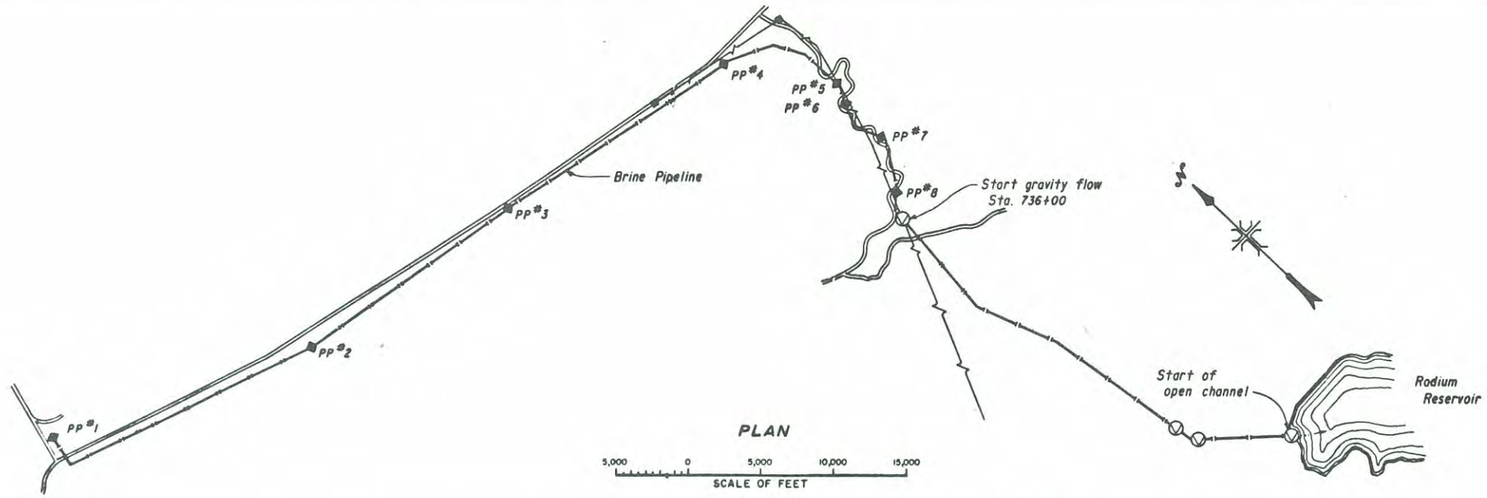

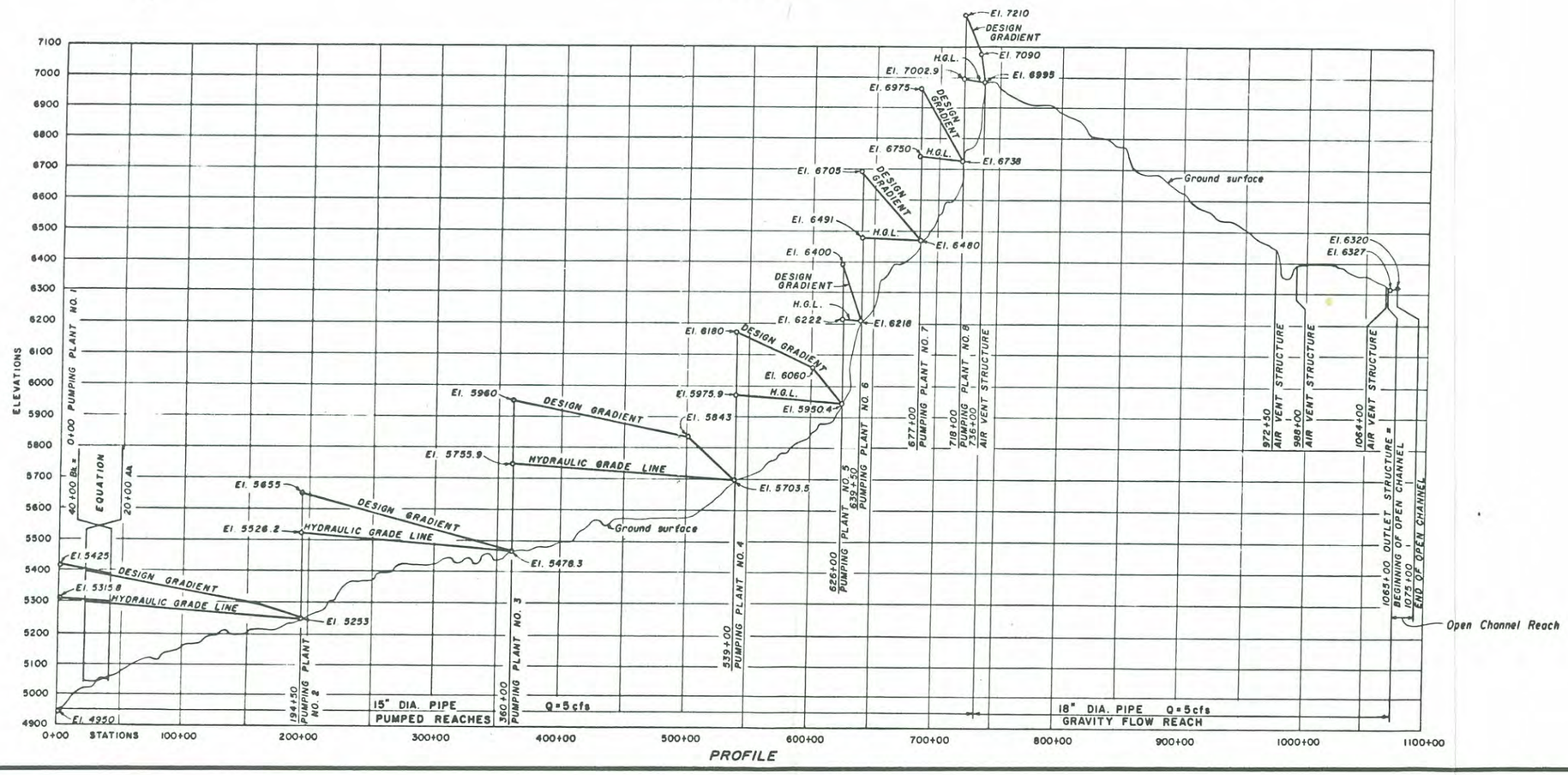

NOTES

Elevations for Hydraulic Grade Line are given as b
pressure head elevations.
Elevations for design gradient are equivalent water
pressure head elevations and may be used directly
obtain pipe head class.
The specific gravity of the brine is 1.164

ALWAYS THINK SAFETY

UNITED STATES
DEPARTMENT OF THE INTERIOR
BUREAU OF RECLAMATION
COLORADO RIVER BASIN SALINITY CONTROL PRO
POINT SOURCE DIVISION PARADOX VALLEY UNIT-COL

BRINE PIPELINE
GENERAL PLAN AND PROFILE
FEASIBILITY DESIGN LAYOUT

DESIGNED Janet C. Ogle SUBMITTED
DRAWN
CHECKED RECOMMENDED
APPROVED DIRECTOR OF DESIGN AND CO

DENVER, COLORADO NOVEMBER 30, 1976 1294-D-

which would be designed for a total dynamic lift of 366 feet (brine head). The eight pumping lifts were selected so that the maximum head class would not exceed 500 feet (water head) to allow a wider variety of pipe options.

A 15-inch-diameter pipe would be used for the pumped section, and an 18-inch pipe would be used for the gravity flow section. A vent structure would be provided at the transition from pumped to gravity flow. Also, two vents would be installed along the gravity section and one near the outlet structure to Radium Evaporation Pond.

A circular, 71-foot-base-diameter, membrane-lined, forebay reservoir would be used at Pumping Plant No. 1. This reservoir would be able to hold the brine from the pumped section of pipe if it were ever necessary to drain the pipeline. Also, a forebay regulating tank would be provided at each of the remaining seven pumping plants.

The final portion of the pipeline design would include a 1,000-foot section of open channel provided at the pipeline outlet at Radium Evaporation Pond.

The pipeline would be underground, with a minimum design cover of 3 feet. Portions of the pipeline which cross large drainage areas where scour is evident would be buried sufficiently below the ground surface.

Site Geology and Construction Materials

The sedimentary formations involved vary from soft, soluble gypsum of the Hermosa Formation to hard, erosion-resistant Dakota Sandstone. Although the soft, soluble gypsum beds should be avoided as a construction foundation, the Hermosa Formation is generally overlain by a sufficient depth of overburden to allow construction above it. The Burro Canyon sandstone rim near station 738+00 and extensive exposure of hard, Dakota Sandstone along the latter part of the alignment will increase the amount of rock excavation considerably; however, the overall proportion of rock and common excavation should be reasonable. The other formations involved should present no problem since the Cutler Formation occurs only in occasional restricted exposures and the Morrison Formation consists largely of relatively soft shales above its basal sandstone member. Slopewash and rock debris along the Paradox Valley canyonside may cause some excavation difficulties but none which is too extreme. There should be a sufficient amount of backfill material in overburden along the alignment either cohesive or cohesionless. Although the Paradox Valley canyonside contains existing landslides, collapse structures, and numerous fault blocks, the alignment climbs the canyonside in a currently stabilized area which should present no serious dangers under the present conditions. The entire area is generally dry, and the pipeline trench is not expected to encounter the water table.

CHAPTER V

PARADOX VALLEY BRINE PIPELINE PUMPING PLANTS

General

The Paradox Valley Brine Pumping Plants would consist of eight pumping plants positioned along the proposed brine pipeline. A typical pumping plant is shown on the following page. The first pumping plant would pump the brine from the proposed Pumping Plant No. 1 holding reservoir to the forebay regulating tank of the next pumping plant, giving the first pumping plant a total dynamic head of 366 feet (brine head). The seven remaining pumping plants would relay the brine up over the valley wall where gravity flow would carry the brine to the proposed Radium Evaporation Pond. Each of these seven pumping plants would pump against a total dynamic head of 275 feet (brine head). The pumping plant locations were selected so the maximum head class for the brine pipeline would not exceed 500 feet (water head), thus allowing a wider variety of pipe options. The pumping plants would carry the brine through the pipeline at a rate of 5 cfs.

The first four pumping plants would be easily accessible by State Highway 90 which runs along the floor of the Paradox Valley. A heavy-duty county road climbs the side of the valley and would pass within 50 to 200 feet of Pumping Plants 5 through 8, making easy access.

Power Supply

Power for the first four pumping plants would be supplied by a 46-kilovolt powerline which runs from Monogram Substation to Bedrock, Colo., along the valley floor parallel to State Highway 90 and the proposed pipeline alignment. Another 46-kilovolt powerline follows the proposed pipeline alignment up the side of the valley beside the last four pumping plants and would supply the power for these pumping plants. The powerlines are owned by San Miguel Power Association, and the wheeling services would be handled by the Colorado Ute Electric Association. A powerline tap would be made at each pumping plant site to supply the needed power.

Pumping Plant No. 1 (Pipeline Station 0+00)

Design

The proposed Pumping Plant No. 1 would pump the brine from the proposed Pumping Plant No. 1 holding reservoir to the forebay regulating tank of the next pumping plant. The operation of this pumping plant would be fully automatic, with the pump operation being governed by float

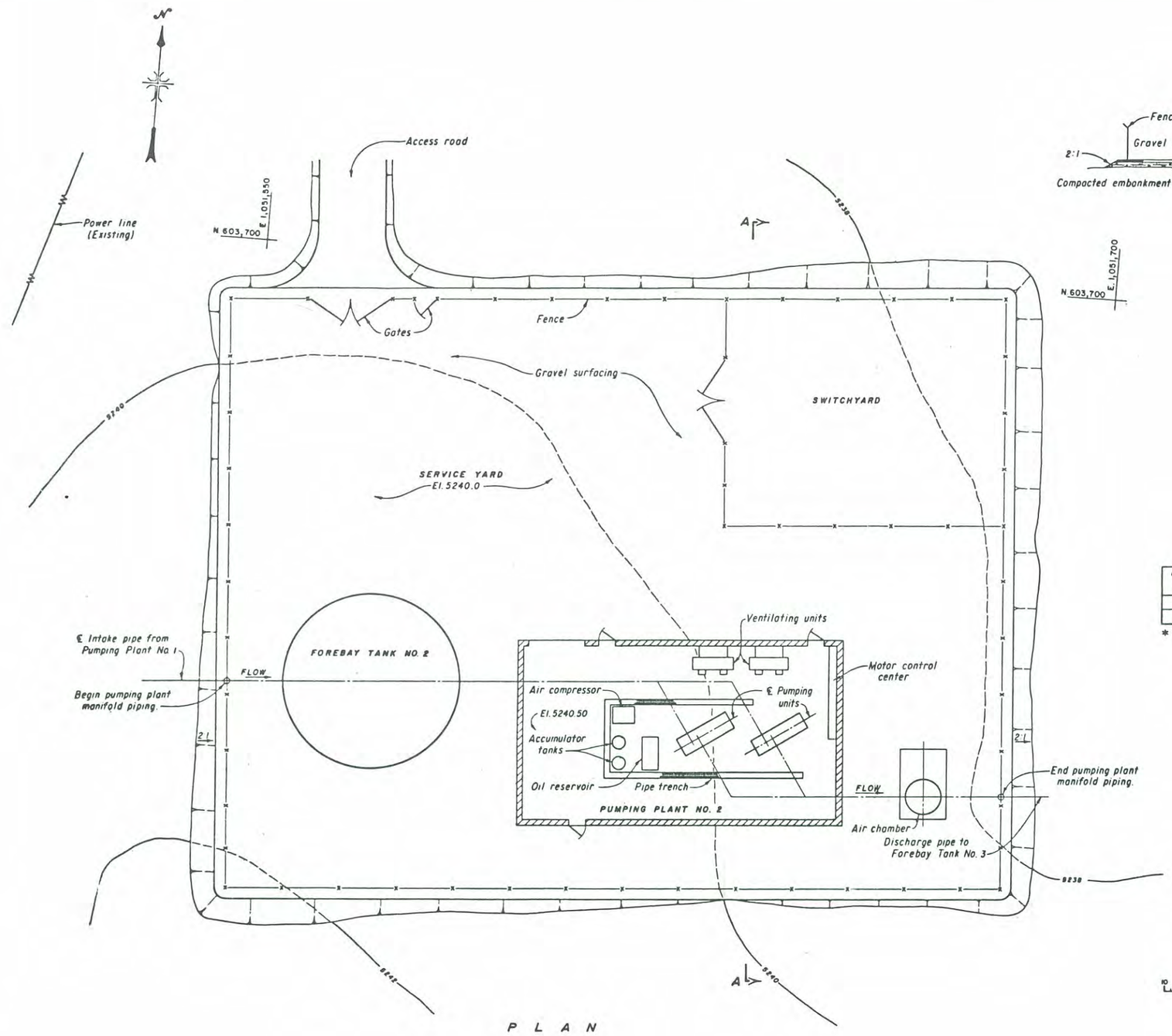

PLAN

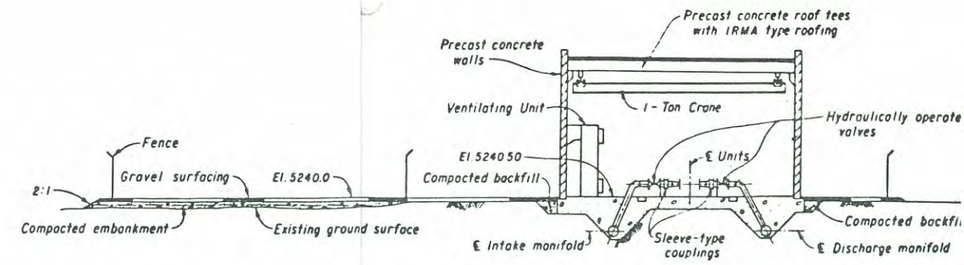

SECTION A-A

NOTES

Topography taken from Dwg No 1294-406-123.
No subsurface geologic exploration was performed immediate vicinity of this pumping plant.
Layouts for Pumping Plants No 3 thru 8 are simil

UNIT DATA

NUMBER OF UNITS	* RATED CAPACITY (c.f.s.)	RATED HEAD (ft.)
2	2.63	320.1
TOTAL	5.26	

* Includes wear factor

10 0 10 20 30
SCALE OF FEET

ALWAYS THINK SAFETY

UNITED STATES
DEPARTMENT OF THE INTERIOR
BUREAU OF RECLAMATION
COLORADO RIVER BASIN SALINITY CONTROL
POINT SOURCE DIVISION
PARADOX VALLEY UNIT - COLORAD

BRINE PUMPING PLANT N
FEASIBILITY DESIGN LAYC

DESIGNED D.W. Harris SUBMITTED
DRAWN F.D.W. RECOMMENDED
CHECKED APPROVED
ACT DIRECTOR OF DESIGN AND

DENVER, COLORADO DEC 24, 1976 1294-

levels in the proposed Pumping Plant No. 1 holding reservoir. The pumping plant would have an electrical power demand of about 260 kilowatts and an average annual electrical energy requirement of 2,270,000 kilowatt-hours. Pumping Plant No. 1 would operate with two vertical turbine-type pumping units at 5.26-cfs-rated capacity with each unit at 2.63-cfs-rated capacity at 426 feet total head (water head).

Site geology

As previously stated, the site is located on a nearly level, sagebrush-covered terrain at elevation 4,950 feet. Hand augering penetrated 5.9 feet of silty sand which changes rather abruptly into lean clay. Lean clay continues to a depth of 10.2 feet where salt and gypsum appear. Silty sand again appears at 13.1 feet which indicates that the salt and gypsum are a caliche zone. Augering was stopped by a hard, coarse, detrital material at 14.7 feet, of which no sample could be obtained.

Pumping Plants 2 Through 8

Design

Pumping Plants 2 through 8 would all be of the same design so that a large supply of parts for various pumps would not be necessary for operation, maintenance, and replacement. Each of these pumping plants would take water from its forebay regulating tanks and pump the water to the next pumping station. The operation of each of the pumping plants would be fully automatic, with the pump operation being governed by float levels in the forebay regulating tanks. Each pumping plant would have an electrical power demand of about 200 kilowatts and an average annual electrical energy requirement of 1,720,000 kilowatt-hours. Pumping Plants 2 through 8 would each operate with two horizontal centrifugal pumping units at 5.26-cfs-rated capacity with each unit at 2.63-cfs-rated capacity at 320 feet total head (water head).

Individual site geology

Pumping Plant No. 2 (Pipeline Station 194+50)

This location is on flat lying pasture land with only occasional sagebrush. Elevation is at 5,253 feet. Test Pit 2RP was dug in the bank of a nearby stream channel and revealed that at least 15 feet of silty sand and gravel (with occasional cobbles and boulders) overlie bedrock at this site. Although no rock outcrops occur on the site, sandstone of the Cutler Formation is exposed only about 300 feet to the northeast and is expected to form bedrock at the site. The site is dry except for moisture in sand near the bottom of the stream channel in which Tp-2RP is located.

Pumping Plant No. 3 (Pipeline Station 360+00)

This site is on gently sloping, sagebrush-covered terrain at elevation 5,478.3 feet. Hand auger drilling penetrated 11.5 feet of mostly sand with some silt and lean clay layers; drilling was stopped by medium-grained, buff-colored sandstone. There are no rock outcrops at the site, but the Hermosa Formation is expected to form bedrock at this distance from the canyonside. The sandstone at the bottom of AH-3RP seemed to be fragmented and is thought to be only detrital rock material. The site is dry.

Pumping Plant No. 4 (Pipeline Station 539+00)

This site is on nearly flat, sagebrush-covered terrain at elevation 5,703.5 feet. Hand auger hole AH-4RP revealed at least 8 feet of lean clay as overburden. Drilling was stopped by a very hard smooth-surfaced material of which no samples could be obtained. It is thought that this obstructing material was either smooth-surfaced, cobble- to boulder-sized detritus or the upper limestone member of the Hermosa Formation. At this location the Hermosa Formation is expected to form bedrock. The site is dry.

Pumping Plant No. 5 (Pipeline Station 626+00)

This site is on a gently sloping, sagebrush-covered alluvial fan at elevation 5,950.4 feet. Hand auger hole AH-5RP, located directly on the site, revealed 8.5 feet of sandy clay and clayey sand above poorly graded gravel. The lower sand and gravel of this auger hole would correlate with the upper sand and gravel in the nearby Test Pit 5RP which extends beyond a further depth of 8.5 feet. Generally, overburden is expected to be about 15 to 20 feet deep and to be underlain by the lower member of the Morrison Formation. The site is dry.

Pumping Plant No. 6 (Pipeline Station 639+50)

This site is located on a pinyon-covered slope of the canyonside at elevation 6,218 feet. No hand auger hole was dug at this site due to the large amount of rocky slopewash in the clayey overburden. The upper member of the Morrison Formation is exposed in the adjacent road cut and underlies the site. The site is dry.

Pumping Plant No. 7 (Pipeline Station 677+00)

This site is located on a nearly flat bench of the canyonside and has previously been cleared of the native pinyon and juniper. Elevation is at 6,480 feet. Although there is a considerable amount of rocky slopewash at the site, hand auger drilling penetrated 7 feet of sandy clay before stopping on hard, medium-grained sandstone; this sandstone may be only a detritus fragment rather than bedrock. Bedrock at the site, however, is the upper member of the Morrison Formation. The site is dry.

Pumping Plant No. 8 (Pipeline Station 718+00)

This site is located on a pinyon- and juniper-covered slope of the canyonside at elevation 6,738 feet. Auger hole AH-8RP penetrated 1.5 feet of lean clay before stopping on hard, medium-grained sandstone. The upper member of the Morrison Formation is exposed in the adjacent road cut and underlies the site. The site is dry.

Construction Material

The nearest source of sand and gravel for concrete aggregate would be the Dolores River deposits which are only a haul distance of about 2 miles from Pumping Plant No. 1. There is an existing gravel pit being used by the county just about 1,000 feet south of the Bedrock Bridge on State Highway 90. Care must be exercised to avoid using stream deposits north of the bridge because of contamination of nickel sulfate salt.

Conclusions and Recommendations for Site Geology

With proper allowances for a few possible geologic problems, the pumping plant sites should be adequate for the relatively small structures which are planned. The soft, soluble gypsum beds of the Hermosa Formation should be avoided as a construction foundation, and foundation test drilling should be performed (many of the hand auger holes may not have contacted bedrock). At sites where the Hermosa Formation is expected to form the bedrock, such as the Pumping Plants 3 and 4 sites, it would be advisable to build the pumping plant structures on an overburden foundation rather than weak, soluble gypsum of the bedrock. The overburden is on gently sloping to flat terrain and should provide relatively firm foundation for such small structures. Although the Paradox Valley canyonside contains existing landslides, collapse structures, and numerous faults, the pumping plant sites are located in a rather stabilized portion of the canyonside, and no fault lines actually cross the sites. Caution should be taken, however, to avoid erosion and slumping of the soft shales in the Morrison Formation, and a monitoring system for slope stabilization is recommended for the canyonside sites. There are some large boulders and considerable amounts of rocky slopewash at these canyonside sites which will have to be removed; but this should present no great difficulties. Each of the sites was found to be dry. There is abundant uncontaminated concrete aggregate material in the nearby Dolores River deposits above Bedrock Bridge.

CHAPTER VI

RADIUM DAM, DIKE, AND EVAPORATION POND

The Radium Dam, Dike, and Evaporation Pond would provide for the disposal of the brine pumped from the proposed brine well field 20 miles away. The evaporation pond would have a total storage capacity of 86,800 acre-feet and would cover an area of 3,630 acres. (The Reservoir Capacity Allocations table is shown on the following page.) The 86,800 acre-feet would consist of 65,700 acre-feet for the disposal of brine and deposited salts, an estimated 2,400 acre-feet for sediments from storm runoff over a 100-year period of unit operations, and 18,700 acre-feet for flood storage. The flood storage would be large enough to retain and evaporate all inflows, including floods entering the pond from the surrounding drainage area, since no water must be allowed to spill and possibly contaminate local ground or surface water. In addition, a surcharge capacity of 6,540 acre-feet at an elevation of 6,339.8 feet would be provided as a standard safety factor according to Reclamation policy and would protect the dam against a design flood having a peak flow of 39,300 cfs and a 3-day volume of 6,600 acre-feet.

The evaporation pond would contain brine of a concentration ranging from 260,000 to 350,000 mg/1. The evaporating brine would leave salt crystals around the basin edge.

Location and Accessibility

The proposed Radium Evaporation Pond site is located in Dry Creek Basin in San Miguel County, Colorado, 5 miles west of Colorado State Highway 141 and 3 miles south of the Montrose County line. The drawing of the Radium Dam and Dike is shown on page 30. The principal industry of the area is uranium mining, and a haul road exists in the evaporation pond basin. The road is not paved but is maintained by San Miguel County and is in reasonably good condition. A segment of the road would be inundated by the pond and would have to be rerouted around the southwest edge of the pond. Operation and maintenance roads of approximately 1.3 miles will have to be constructed.

There would be no power demand at the proposed Radium Evaporation Pond.

Rights-of-Way

Lands to be acquired within the evaporation pond take line total 7,290 acres. The land type is mainly classified as shrubland, of which 4,990 acres are private to be acquired by fee title, and 2,300 acres are public land withdrawals under the administration of the Bureau of Land

7-1686 (2-72)
Bureau of Reclamation

RESERVOIR CAPACITY ALLOCATIONS

TYPE OF DAM	Earthfill	REGION UC	STATE Colorado
OPERATED BY	Bureau of Reclamation	Radium Evaporation Pond	RESERVOIR
CREST LENGTH	1/ FT; CREST WIDTH 30 FT	Radium	DAM
VOLUME OF DAM & Dike	2,500,000 CU YD	Colorado River Basin Salinity Con-	PROJECT
CONSTRUCTION PERIOD	6 years	trol Point Source	DIVISION
STREAM	Tributary to West Fork Dry Creek	Paradox Valley	UNIT
RES AREA 3,754	ACRES AT EL 6,340	Planning	STATUS OF DAM
ORIGINATED BY: (Initials) (Code) (Date)		APPROVED BY: (Initials) (Code) (Date)	

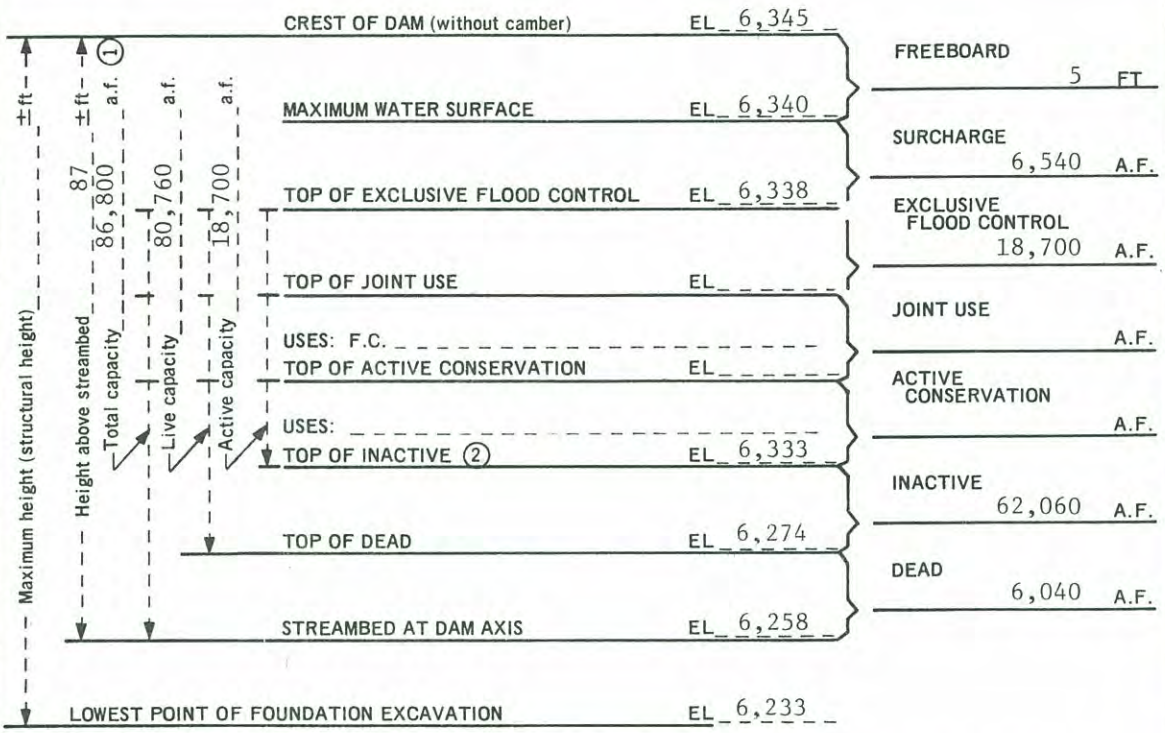

① Includes 2,400 a.f. allowance for 100 year sediment deposition between streambed and El _____, of which _____ a.f. is above El _____.

② Established by _____

REFERENCES AND COMMENTS:

Denver Drawing 1294-D-5.

1/ Crest length of dam: 8,300 feet.
Crest length of dike: 7,500 feet.

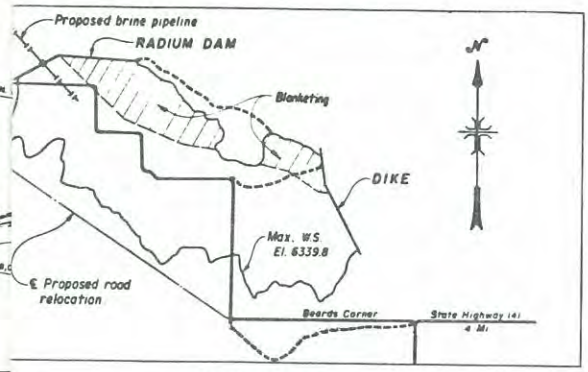

VICINITY MAP

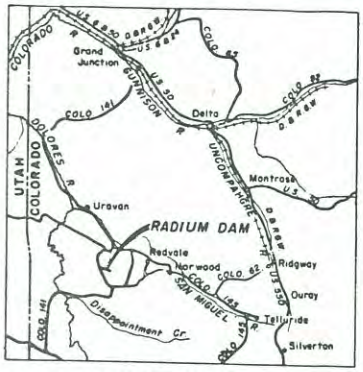

LOCATION MAP

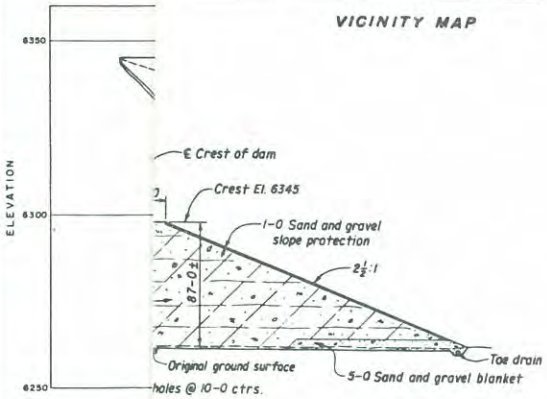

N-DAM AND DIKE

F FEET

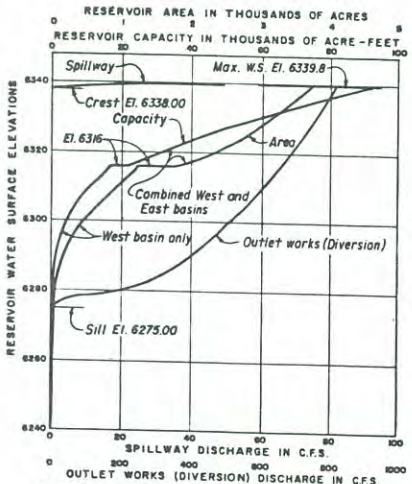

AREA-CAPACITY-DISCHARGE CURVES

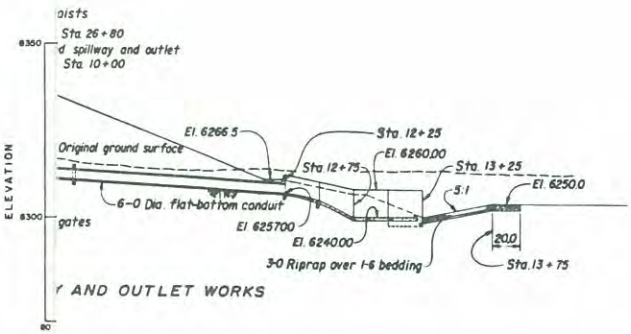

AND OUTLET WORKS

ALWAYS THINK SAFETY

UNITED STATES
DEPARTMENT OF THE INTERIOR
BUREAU OF RECLAMATION
PARADOX VALLEY UNIT - COLORADO
COLORADO RIVER BASIN SALINITY CONTROL PROJECT

RADIUM DAM AND DIKE

FEASIBILITY DESIGN DRAWING

DESIGNED — SUBMITTED
DRAWN — RECOMMENDED
CHECKED — APPROVED — DIRECTOR OF DESIGN AND CONSTRUCTION

DENVER, COLORADO DECEMBER 17, 1976 | 1294-D-5

Management. Also, an uneconomical unit would result in the acquisition of this land and is included in the right-of-way cost estimate. The right-of-way is shown on the following page.

Relocation and Reservoir Clearing

The construction of Radium Dam, Dike, and Evaporation Pond would require the relocation of 3.8 miles of a San Miguel County road. The replacement road would follow the right-of-way take line for the evaporation pond to the southwest and would be 4.2 miles long. The replacement road would be an improved graveled road.

The proposed Radium Evaporation Pond would also inundate one archaeological site and one historical site in Dry Creek Basin. Further investigation and possible excavation of these sites would be required before construction.

Reservoir clearing would be required in the areas of the dam, dike, and the blanketing material placement. These areas are covered by sagebrush which would be removed by means to cause the least amount of interference with the animals in the area.

General Geology

The Radium Dam, Dike, and Evaporation Pond lies within the Paradox Fold and Fault Belt of the Colorado Plateau physiographic province. The Colorado Plateau is a region of generally flat lying or gently warped sedimentary formations eroded into high-cliffed mesas and deep-walled canyons. Structurally, the area is composed of long, summit-eroded anticlines, large monoclines, faults, and several small, laccolithic mountain domes. The Paradox Fold and Fault Belt in the eastern portion of this region is a tectonic belt of en echelon folds and faults which trend toward the northwest. In this belt several elongated, salt-pierced anticlines have been faulted and eroded into deep-walled, graben valleys which are flanked by the adjoining synclinal valleys. It is in such a synclinal valley, Dry Creek Basin, that the site is located.

Site Geology

The Radium Dam, Dike, and Evaporation Pond site should be geologically adequate if proper allowances and adjustments are made for a few problems noted in this report. Several sites have been considered on West Fork of Dry Creek for the location of Radium Dam, as the original downstream site which was core drilled during feasibility exploration is unacceptable. The Dakota Sandstone abutments at this site were found to

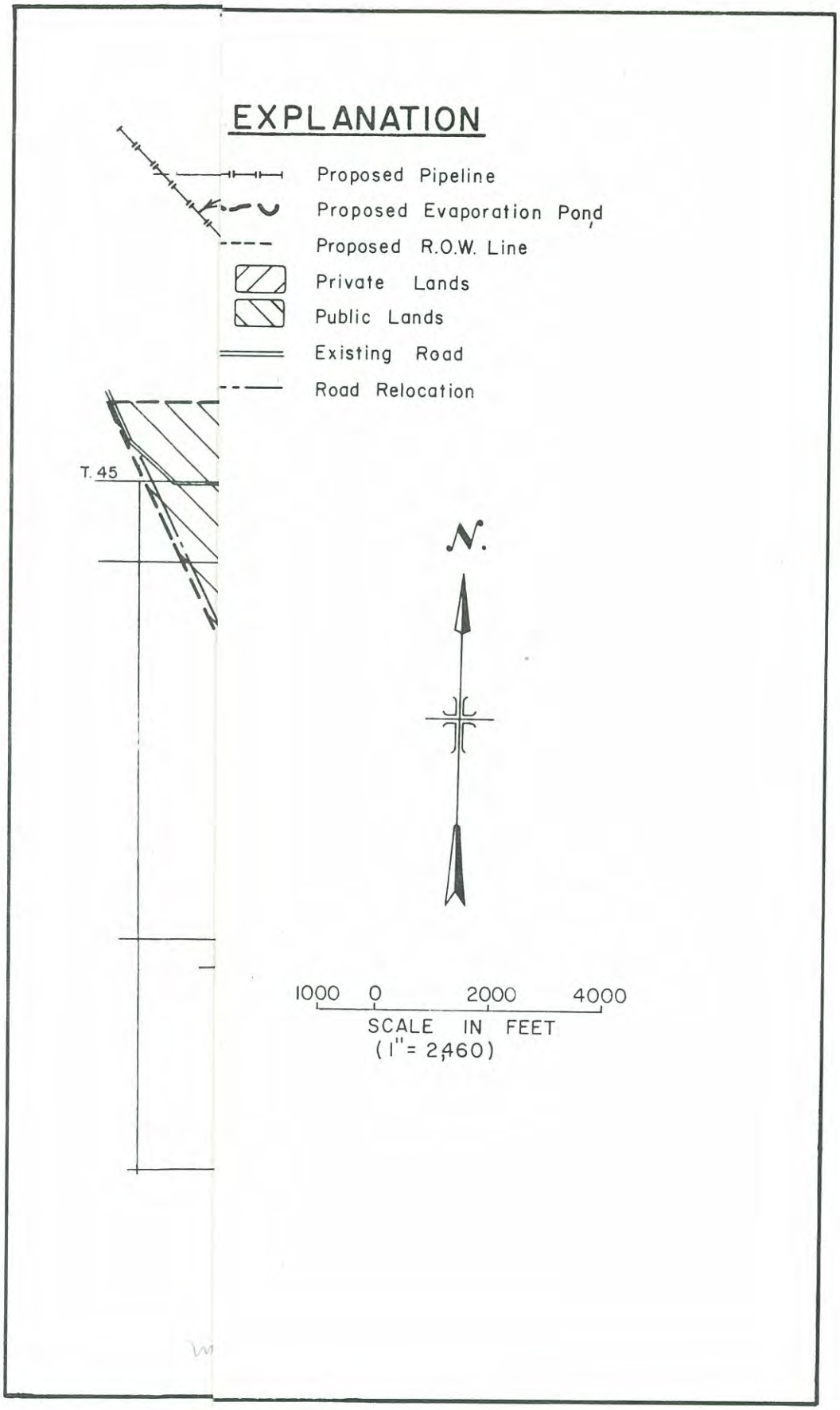
EXPLANATION
Proposed Pipeline
Proposed Evaporation Pond
Proposed R.O.W. Line
Private Lands
Public Lands
Existing Road
Road Relocation
T. 45
N.
1000 0 2000 4000
SCALE IN FEET
(1" = 2,460)

consist of extremely jointed upper sandstone beds underlain by weaker and fractured shale, siltstone, and sandstone interbeds. The formation lost a large amount of water in drill hole percolation tests and appears too extensively exposed for sufficient sealing. These conditions persist throughout the site, and any cutoff excavation required would be considerable and costly; also, to line such an area would be costly. Therefore, a site has been selected farther upstream where Dakota Sandstone is overlain by impermeable lean clay and/or Mancos Shale; any joints or fractures in the sandstone at this site will not have been exposed to expanding freeze-thaw forces or other surface weathering processes. Geologic data from the drill holes of the downstream site may be generally related to the upstream site, but further foundation drilling is recommended before construction. The abutments of the Radium ~~Dam~~Dike site on the West Fork of Dry Creek are also of jointed Dakota Sandstone and had some significant water losses; the sandstone, however, is not as extensively exposed at this site and, with proper grouting, may form an adequate foundation. On the other hand, since geologic conditions at the Radium Damsite are similar to those at the downstream Radium Dike site, it would be advantageous to consider any possible locations of Radium Dam farther upstream on the West Fork of Dry Creek. Most of the pond site is underlain by impermeable Mancos Shale which extends to a depth of more than 200 feet in some places. The northeastern slope of the pond site is underlain by generally permeable Dakota Sandstone and will have to be lined to prevent saline water from seeping out.

Construction Materials

Impervious embankment

There should be a sufficient amount of lean clay for impervious material within the evaporation pond site below the proposed maximum water surface elevation of 6,339.8 feet. This material should be suitable for both core and embankment in a rolled-earth-type dam. Due to concentrations of soluble carbonate and/or sulfate minerals in some of this clay, caution should be used in the final selection of borrow areas.

Pervious embankment

There is an abundance of sandstone and some moderately thin limestone beds exposed in the immediate area which may be blasted for rockfill material; this could be the Dakota Sandstone and Burro Canyon Formation north of the site or the limestone cuestas of the Mancos Shale which are mostly to the southwest of the site (one such cuesta is within the pond site in sec. 6, T. 44 N., R. 16 W.). A better source could probably be located in a somewhat extensive terrace gravel deposit about 5 miles south of the pond site in sec. 9, T. 43 N., R. 16 W., or in the gravel deposits of the San Miguel River near Naturita. The San Miguel River deposits would require a haul distance of about 22 miles.

Concrete aggregate

The nearest source of concrete aggregate, if it were tested to meet Bureau of Reclamation standards, would be the terrace gravel deposits 5 miles south of the pond site, as previously mentioned. Otherwise, sand and gravel may be obtained from the San Miguel River deposits with a haul distance of at least 22 miles. The quality of the San Miguel River aggregate has not been tested but would probably be acceptable by Bureau of Reclamation standards.

Riprap

The closest possible riprap source, the Dakota Sandstone, tested out to be unsatisfactory. The very hard, but locally limited, source of quartzite from the Burro Canyon Formation was found to be satisfactory. If more of the Burro Canyon quartzite cannot be located near the site, a hard, dense, crystalline limestone source is located 13 miles southeast of the evaporation pond. An existing road would provide access.

The following table shows the amount of borrow material required for the dam, dike, and impervious blanket in the evaporation pond.

Borrow materials

	Quantity (cubic yards)			
Feature	Impervious fill	Pervious sand and gravel	Riprap	Total
Radium Dam	1,300,000	104,000	76,000	1,480,000
Radium Dike	900,000	60,000	44,000	1,004,000
Impervious blanket	5,200,000			5,200,000

Radium Dam

Radium Dam would be a rolled-earth, sand, gravel, and rockfill structure with a maximum height of 87 feet above streambed. Its crest would be 30 feet wide and approximately 8,300 feet long. A cutoff trench with a maximum base width of 50 feet would be excavated to a depth of about 25 feet to bedrock. Two rows of grout holes on 10-foot centers, complete with grout cap, would be drilled into the foundation and grouted. The dam embankment would be the homogeneous type made with an impervious material. It would contain a total volume of approximately 1,480,000 cubic yards of material. The upstream face would have a slope of 3:1 and would be protected by a 3-foot layer of riprap on 1.5 feet of bedding. The downstream face would have a slope of 2½:1 with a 1-foot layer of sand and gravel protection.

Combined Spillway and Outlet Works

The proposed Radium Dam combined spillway and outlet works would be located in the left abutment of the dam. The spillway would have a crest elevation of 6,338 feet. At a maximum water surface elevation of 6,339.8 feet, the spillway would discharge 50 cfs over the crest. The discharge from the spillway would freefall to an elevation of 6,272.5 feet where it would combine with the outlet works, flow out through a 6-foot-diameter flat bottom conduit, and into a stilling basin at elevation 6,240 feet. The intake structure of the outlet works would have an invert elevation of 6,275 feet. From the intake structure, the discharge would flow through a 6-foot-diameter conduit until it reached the intersection with the spillway structure. From there it would follow the same path as the spillway discharge. The outlet works would act as a diversion for flood control during construction and then act as an emergency outlet after construction. The outlet works would be controlled by two 48-inch x 60-inch slide gates at the intersection with the spillway structure. Manual hoists located on the crest of the dam would lift the outlet works gates.

Impervious Clay Blanket

A 5-foot-minimum thickness, impervious clay blanket placed between the dam and dike would be necessary to prevent seepage water from entering the exposed Dakota Sandstone which in turn could result in saline water contamination of downstream wells. The volume of impervious material required for blanketing (5,200,000 cubic yards) is more than double the volume of dam embankment, and further investigations will be necessary to prove availability of impervious borrow material.

Radium Dike

Radium Dike would also be a rolled-earth, sand, gravel, and rockfill structure with a maximum height of 56 feet above the ground surface. The crest of the dike would be 30 feet wide and 7,500 feet long. A cutoff trench with a maximum base width of 50 feet would be excavated to a depth of about 25 feet to bedrock. Two rows of grout holes would be drilled into the foundation on 10-foot centers. These holes would then be grouted and finished with a grout cap. An impervious material would make up the homogeneous-type dike embankment containing a total volume of approximately 1,004,000 cubic yards of material. The upstream face would be protected by a 3-foot layer of riprap on 1.5 feet of bedding and would have a slope of 3:1. The downstream face would have a slope of 2½:1 with a 1-foot layer of sand and gravel protection.

Environmental Considerations

The proposed Radium Dam, Dike, and Evaporation Pond would be located in Dry Creek Basin. The basin is mostly flat lying with wide, gently sloping sides and light brown Dakota Sandstone outcrops. Vegetation in the basin is greasewood, seablite, winterfat, and snakeweed.

There are no historical sites in the vicinity of either the Radium Dam or Dike as reviewed by the National Park Service. One archaeological and one historical site, however, would be inundated by the Radium Evaporation Pond. These sites would be tested and, if necessary, excavated and salvaged.

Water quality standards and control of turbidity during construction would not be of concern to the contractor since the streams in the basin are intermittent.

Standard Bureau of Reclamation construction procedures and designs should be adequate for erosion and sediment control.

Riprap would be selected to allow the dam and dike to blend with the ground surface color of the surrounding area.

Reservoir clearing would be conducted in a manner that would least disturb the wildlife habitat in the area of the evaporation pond.

Facilities for fish would not be necessary in the evaporation pond since there are no fish in the area, and none would be able to live in the brine to be stored in the pond.

No public use of the evaporation pond would be anticipated because of the high salt concentrations expected in the pond.

CHAPTER VII

TRANSMISSION LINES AND SUBSTATIONS

Power to operate the pumping plants, well field, and operating facilities would come from the Colorado River Storage Project through the existing system of the utilities in the area. Included in this system is a 46-kV transmission line parallel to the proposed brine pipeline alignment. This line would be tapped to serve the eight pumping plants and the permanent operating facilities which include the Hydrogen Sulfide Stripping Plant and personnel housing. The lines from the service pole to each facility, including the pumps in the brine well field, will be buried. The substations to serve these loads would be low in profile.

The existing powerline is owned and maintained by the San Miguel Power Association, Inc. Colorado Ute Electric Association would handle wheeling service to the San Miguel Power Association for the CRSP power.

The following table shows the power requirements for the various features of the Paradox Valley Unit.

Power requirements for various features of the Paradox Valley Unit

Feature	Number of pumps	Pumping brine head (feet)	Pumping water head (feet)	Peak electrical capacity (kW)	Average annual energy requirements (kWh)
Pumping plants					
No. 1	2	366	426	260	2,270,000
No. 2	2	275	320	200	1,720,000
No. 3	2	275	320	200	1,750,000
No. 4	2	275	320	200	1,720,000
No. 5	2	275	320	200	1,720,000
No. 6	2	275	320	200	1,720,000
No. 7	2	270	315	190	1,700,000
No. 8	2	265	309	190	1,670,000
Subtotal				1,640	14,270,000
Brine well field				124	1,081,000
Total				1,764	15,351,000

There will be no power requirements at the Radium Evaporation Pond site.

An existing powerline tap serves the brine well field at this time and will be enlarged, if necessary, as the brine well field is tested and put into production.

CHAPTER VIII

RESTORATION AND CONSERVATION PROGRAM

All sites disturbed during construction, including the areas of the pipeline, borrow, and roadside slopes and berms, would be rehabilitated to lessen the visual effect. The rehabilitation would also conserve soil and moisture and, at the same time, benefit wildlife. Topsoil would be removed from the areas to be disturbed and would be stockpiled. Once work is completed, the topsoil would be replaced, shaped, and contoured to blend with the landscape. This would facilitate new vegetation. Plant species used would be suitable for wildlife use. To help assure establishment of a vegetative cover, fertilizer and possibly water would be applied.

Additional measures to be employed at Radium Evaporation Pond include land acquisition, fencing, and construction of small water retention structures. Some 3,600 acres of land adjacent to the reservoir will be developed for wildlife. The development will compensate for all wildlife losses associated with the project. About 15 miles of fence would be built to exclude unmanaged livestock. The fence would be designed so as not to impede movement or impose hazards to deer, elk, or antelope. Approximately five earthfill, retention structures with a surface area of about 2 acres each would be constructed to collect natural runoff before it flows into the evaporation pond and becomes contaminated by the brine. The stored water would increase local soil moisture and thereby aid vegetative growth. The small ponds would also benefit wildlife due to water being a limiting environmental factor for wildlife in the area.

CHAPTER IX

OPERATION, MAINTENANCE, AND REPLACEMENTS

Project Operations

Personnel

The responsibility of operating and maintaining the Paradox Valley Unit project features would remain with the Bureau of Reclamation. Four permanent employees would be required to monitor the operation of the facilities and perform the required maintenance on the pumping units and Hydrogen Sulfide Stripping Plant. Seasonal or part-time laborers may be used to assist in larger scheduled maintenance work and facility upkeep. The four permanent employees would be the project superintendent, two plant mechanics/operators, and an electrical equipment repairman. The duties of each of the respective employees are listed below.

Project Superintendent

The project superintendent would be responsible for the planning, coordinating, and supervising of the operation and maintenance of all project works. His duties would include investigating and measuring environmental conditions associated with the operations of the Hydrogen Sulfide Stripping Plant, monitoring the operation of the project, providing supervision to other operation and maintenance personnel, and acting as the Bureau's liaison with the public.

Plant Mechanics/Operators

Plant mechanics/operators would perform a variety of tasks involved in the upkeep and repair of the project pumping units and Hydrogen Sulfide Stripping Plant. As plant operators, they would check all operations periodically during a shift and make adjustments to lubrication systems, valve operation, and other minor adjustments necessary to keep the project operating efficiently and correctly.

Electrical Equipment Repairman

The electrical equipment repairman would concentrate mainly on the upkeep and repair of the electrical components of the project. Included would be the supervisory control system developed for the Hydrogen Sulfide Stripping Plant and the electric motors and switches on the pumping units.

Laborer

A laborer would mainly be assigned to assist the other employees in their job tasks. Seasonal laborers may be needed to assist in the upkeep of the project buildings and grounds and to assist in larger scheduled maintenance and replacement work on the project facilities.

Operation and maintenance headquarters and housing

An operation and maintenance headquarters would be provided near the Hydrogen Sulfide Stripping Plant. Office space would be included in the stripping plant building; and a shop, equipment shed, and storage building would be constructed near the stripping plant. The entire operations and maintenance headquarters would be fenced for safety and security concerns.

Housing for the operating personnel would be provided near the project headquarters. Four three-bedroom houses would be located approximately 100 yards south of the headquarters area to be used by the superintendent, two plant mechanics, and electrician.

Well field

The brine well field would consist of approximately 18 brine production wells, 68 monitoring wells, stream gaging and water quality sampling stations, and a buried pipeline leading from the well field to the Hydrogen Sulfide Stripping Plant. The well field would be located on both sides of the Dolores River about midway in the river's course through Paradox Valley.

The brine production wells along the river would be spaced at approximately 450-foot intervals around the upper inflow area and 800-foot intervals around the lower inflow areas. Each well casing would have a working diameter of about 12 inches. A screen forming the lower 15 to 40 feet of the casing would allow brine to enter and would be surrounded by packed gravel to ensure that the fine sands in the aquifer would not be drawn into or clog the well system. Each well would also have a control panel, a flow meter, and a sampling tap for monitoring the chemistry of the brine. The well heads would be enclosed by concrete structures about 8 feet high and nearly 9 feet long on each side to prevent damage from weather, floods, and vandalism. The roofs provided for these structures would be removable so that the pumps could be easily repaired or replaced. An electric pump which would provide the 0.05 to 1.0 cubic foot per second (cfs) would be installed at each well, with individual transmission lines for each well tapped into an existing line adjacent to the well field. The transmission poles would be made of wood and would be about 30 feet high, with single or double crossarms about 8 feet long. A transformer would generally be located at each well, although in some cases one transformer would serve two adjacent wells.

Pipelines paralleling each side of the river would connect the production wells, collecting the brine from the pump discharge lines at the wells and conveying it to the Hydrogen Sulfide Stripping Plant. The line on the east side would be about 2.6 miles long. The line on the west side would extend for about 1.4 miles along the riverbank and 0.2 mile across the river channel to join the other line. Constructed of reinforced plastic mortar or some other pipe resistant to salt corrosion, the lines would be buried with a minimum cover of 3 feet.

The 68 monitoring wells that were drilled during the general investigation period would form a grid around the production wells and would be used to monitor the water table, the interface between the brine and a thin layer of relatively freshwater that overlies the brine, and the brine piezometric head at various points in the aquifer. The information obtained would be used to establish the pumping rates and patterns for the production wells.

An additional monitoring system using electrical conductivity meters would be installed along the river to assess the effects of the pumping on the river salinity. Water samples taken each week would be used to substantiate the accuracy of the meters.

The operation of the well field would lower the freshwater-brine interface below the elevation of the stream channel and thereby reduce the flow of brine into the channel. To maintain the lowered freshwater-brine interface, the pumps would be continuously coordinated on the basis of information obtained from the ground water monitoring wells and the river monitoring system. Although the influx of brine averages about 0.8 cfs, the unit's designs are based upon a maximum pumpimg rate of 5 cfs, which would be required to initially lower the interface and to adjust to possible fluctuations in ground water movement caused by seasonal and annual variations in recharge or by other circumstances. Once the interface was lowered, a reduced pumping rate would be sufficient over the long term to maintain it at the lower level, but the amount of the reduction cannot as yet be estimated.

Both the overall rate and the pattern of pumping are critical for effective unit operation. The pumping rate must be sufficient to lower the freshwater-brine interface and keep it at the lower level but not so high as to excessively lower the brine and draw the layer of fresh ground water down into the pumping zone, which would result in unnecessarily high operational costs. The pumping pattern is important, since lowering the interface too much in one part of the well field and too little in another would also result in inefficient operation by unnecessarily pumping freshwater in one area while still allowing brine to enter the river in another.

The pumping units in the well field would require periodic checks to assure that they were functioning properly. Operating temperature,

lubrication, and on/off data would be telemetered to the master control station in the stripping plant to enable an alarm system to be utilized to oversee the pumping unit operations. Should a malfunction occur, operating personnel would be alerted by the alarm and would then be able to physically inspect the downed unit to diagnose the problem.

Hydrogen Sulfide Stripping Plant

The stripping process would be accomplished by an aeration system consisting of four coal-tar, epoxy-lined, steel aeration tanks, a nickel sulfate catalyst injection system, and an air compressor/filtration system. The reaction system would consist of a series of porous dome distributors located at the bottom of the four 10,000-gallon-capacity tanks. Storage would be provided for an approximate 1-year supply of the nickel sulfate.

Brine would flow into the plant at the rate of 5 cfs through a 15-inch-diameter pipe from the brine well field. Inside the plant, nickel sulfate would be added to the brine before it enters the tanks as a reaction catalyst in the conversion of hydrogen sulfide to elemental sulfur. Compressed, dried, and filtered air would be distributed to the aeration tanks and would pass through the porous plate distributors which would oxidize the hydrogen sulfide gas producing water and elemental sulfur.

The control system would be designed for fully automatic operation requiring only periodic routine monitoring. Control and monitoring functions would be accomplished in a centralized master control station located within the stripping plant building. The system would consist of a remote terminal unit with a microprocessor located in the equipment area and a minicomputer located in the master control room. Also located within the control room would be equipment for programming and storing data, printers, and a display terminal. The display terminal would be equipped with a keyboard to allow the operator to type in operation commands and request information. An additional minicomputer would be provided for backup and for programming and testing the control system.

All full-time personnel on the project would be capable of operating the stripping plant. Daily operations would be handled by the project superintendent with assistance from the plant mechanics and electrical equipment repairman. Due to the comprehensive automatic control system, daily operations would consist mainly of periodic checks on the equipment. Alarms on the vital operations of the plant would notify operating personnel of any malfunction which might occur. Nighttime operations would be performed by operating personnel on standby. The operating alarms would be wired to all project houses and the personnel will rotate the nighttime standby duty.

Maintenance on the stripping plant would be performed by the plant mechanic and electrical equipment repairman. Larger scheduled jobs could be done with the assistance of part-time or seasonal laborers.

Brine pipeline and relift pumping plants

A pipeline 20.5 miles long would convey the brine from the Hydrogen Sulfide Stripping Plant to Radium Evaporation Pond. The pipe would be reinforced plastic mortar or some other suitable pipe resistant to salt corrosion. For the first 14.3 miles to the top of the divide between Paradox Valley and Dry Creek Basin the brine would be pumped through 15-inch-diameter pipe, and for the remaining 6.2 miles it would flow by gravity through 18-inch-diameter pipe. The brine would discharge through a baffled outlet into an open channel extending about 1,000 feet into the evaporation pond area. This channel, which would be earth lined and protected with riprap, would convey the brine away from the pipe, thus preventing salt deposits from forming around the outlet and causing unnecessary maintenance problems.

Eight pumping plants along the pipeline would lift the brine through a total elevation of about 2,045 feet between the stripping plant and the divide between Paradox Valley and Dry Creek Basin. Each of the plants would be fully automatic and would operate with two horizontal centrifugal pumps, with the exception that two vertical turbine pumps would be installed at Pumping Plant No. 1. Each pump would have a rated capacity of 2.63 cfs, with a head of 366 feet (brine head) at Pumping Plant No. 1 and around 275 feet (brine head) at each of the other pumping plants. The pumps would be housed in one-story concrete structures that would also contain movable overhead cranes for maintenance and replacements. The plant sites would be fenced and would also contain forebay reservoirs or tanks, air chambers, and switchyards. Gravel would be placed on surface areas not occupied by structures.

Pumping Plant No. 1 would be located adjacent to the stripping plant, from which the treated brine would discharge into a forebay reservoir lined with a polyvinyl chloride liner to prevent leakage. Float levels in the reservoir would govern the operation of the pumps. Pumping Plants 2 through 8 would have forebay regulating tanks with float levels to govern pumping operations. An air chamber, or surge tank, at each plant site would absorb the pressure fluctuations caused by changes in flow through the brine pipeline.

In the event that the draining of the pipeline is required, the forebay reservoir at Pumping Plant No. 1 and the forebay tanks at Pumping-Plants 2 through 8 would be able to contain the volume of the pipeline. These tanks also make it possible to isolate and drain segments of the pipeline.

Operation information on the eight pumping plants would be relayed to the master control room at the stripping plant to allow the operations to be monitored and controlled from a central location. The pumping units would also have alarms to notify operating personnel of any malfunctions.

The pumping units are to be in operation 52 weeks out of the year, therefore, standby pumps and motors would be used to replace malfunctioning units in order that maintenance personnel could make repairs without shutting down the whole system for other than short periods of time.

Radium Dam and Evaporation Pond

Radium Evaporation Pond would be formed by the construction of Radium Dam on an intermittent tributary of the West Fork of Dry Creek and Radium Dike on an intermittent tributary of the East Fork and would cover an area of up to 3,630 acres in the two drainages and across a very low saddle between the two. At the maximum water elevation of 6,339.8 feet and surface area of 3,630 acres, the pond would have a total capacity of 86,800 acre-feet, consisting of 65,700 acre-feet for the disposal of brine and deposited salts, an estimated 2,400 acre-feet for sediments from storm runoff over a 100-year period of unit operations, and 18,700 acre-feet for flood storage. The flood storage would be large enough to retain and evaporate all floodwaters entering the pond from the surrounding drainage area, since no water must be allowed to spill and possibly contaminate local ground or surface water. In addition, a surcharge capacity of 6,540 acre-feet would be provided as a standard safety factor.

Radium Dam would be a rolled-earth, sand, gravel, and rockfill structure with a 3-foot layer of riprap on the upstream face; and a 1-foot layer of sand and gravel on the downstream face would protect the structure against erosion. The outlet works in the dam consists of a 6-foot-diameter, double-gated conduit which empties into a stilling basin. The spillway combines with the outlet works before it enters the stilling basin.

Radium Dike would also be a rolled-earth, sand, gravel, and rockfill structure. To protect the structure, a 3-foot layer of riprap would be placed on the upstream face, and a 1-foot layer of sand and gravel would be placed on the downstream face.

The pond area would be accessible by way of two gravel roads constructed from the relocated county road. One road, about 2.6 miles long, would extend from the west side and cross the crest of the dam. The other road would have a total length of 1.5 miles, extending from the south and crossing the dike.

Normal operations of Radium Dam and Evaporation Pond would entail minimal time on the part of the operation and maintenance personnel. Erosion and weed control programs would be initiated, some road maintenance

on the interior access roads would be needed, and periodic readings would be made on the dam piezometer and settlement instrumentation installations.

Power transmission

Electric power for unit facilities would be obtained from two existing transmission lines. The pumps at the brine production wells would use power tapped from a line approximately 250 feet east of the well field and distributed to the wells by about 1.6 miles of proposed new lines. Generally, each well would have a separate transformer, although in some instances two adjacent wells would share one.

The Hydrogen Sulfide Stripping Plant, operating housing, and brine pipeline pumping plants would use power from a transmission line that parallels the pipeline alignment. The stripping plant and Pumping Plant No. 1, located adjacent to each other, would be served by a single tap and an underground transmission line about 1/4 mile long connected to a switchyard at the stripping plant site. Each of the other seven pumping plants would have an individual tap, an underground line up to about 1/4 mile long, and a switchyard. The four houses for operating personnel would share a single tap and underground line about 1/4 mile long, with a transformer located at each house.

Power would be obtained from the Colorado River Storage Project by means of the project's Shiprock-to-Curecanti, 230-kV transmission line. The power would be wheeled to the unit area by the Colorado Ute Electric Association and conveyed to the facilities by existing powerlines of the San Miguel Power Association. Maintenance of the powerlines and facilities would be the responsibility of the respective entity. An additional 1.5 mills per kilowatt-hour have been included in the power costs to provide for this wheeling charge.

Wildlife enhancement facilities

The administration, operation, and maintenance of the facilities around Radium Evaporation Pond constructed for wildlife enhancement would be the responsibility of the Colorado Division of Wildlife. The annual cost of upkeep on fences, water retention structures, and grass plots would be approximately $2,000. This cost would not be assessed to the Bureau of Reclamation's annual cost of project operation and maintenance but would be funded through the State.

Operation, Maintenance, and Replacements Estimate

The following cost estimates are made using an approximated January 1977 operation and maintenance cost index of 2.02, the base year 1956 = 1.

Personnel

	Annual cost
Project superintendent (GS-11.5)	$19,300
Plant mechanic/operator (2 @ WG-8)	27,000
Electrical equipment repairman (WG-8)	13,500
Laborer (seasonal part time) (2,000 hours @ $4.50 per hour)	9,000
	68,800
Health, retirement benefits (10 percent)	6,300
Administrative and general expense (29 percent)	19,800
Total	94,900

Equipment and costs

		Annual cost
Pickup (1/2 ton)		
1 project superintendent	10,000 miles	
1 plant mechanic	10,000 miles	
	20,000 miles @ $0.15 per mile	$3,000
Pickup (3/4-ton) (4 x 4)	10,000 miles @ $0.20 per mile	2,000
Flatbed truck	1,000 hours @ $3.75 per hour	3,750
Grader	750 hours @ $7.75 per hour	5,812
Industrial tractor	1,000 hours @ $4.10 per hour	4,100
Dump truck	500 hours @ $4.50 per hour	2,250
Crawler tractor	500 hours @ $10.00 per hour	5,000
Miscellaneous equipment (includes shop tools, welding supplies, etc.)		3,000
Subtotal		28,912
Contingencies (+20 percent)		5,782
Rental of special equipment		5,000
Total		39,700

Annual supplies

The aeration process proposed to be implemented in the Hydrogen Sulfide Stripping Plant requires a supply of nickel sulfate to act as a catalyst. Storage hoppers sufficient to hold a 1-year's supply of nickel sulfate would be provided in the plant building. Based on an influent rate to the plant of 5 cfs and an injection requirement of 2 parts per million of nickel sulfate, the annual supply of nickel sulfate would be 19,700 pounds.

	Annual cost
Nickel sulfate (19,700 lb/year @ $0.92 per pound)	$18,130
Miscellaneous supplies (includes paints, lumber, cleaning supplies, repair material, etc.)	5,000
Subtotal	23,130
Contingencies (+20 percent)	4,630
Total	27,760
Total (rounded)	27,800

Power

The table showing energy requirements and cost estimate is shown on the following page.

Major replacements

Project works requiring a major replacement provision would be the Hydrogen Sulfide Stripping Plant and the automatic operation equipment. Replacements on pumping plants under 750 horsepower are considered as part of the normal maintenance cost.

	Field cost	Service life (years)	Sinking fund factor at 5½ percent	Annual replacement cost
Hydrogen Sulfide Stripping Plant				
Structures and improvements	$470,000	50	0.000671	$315
Waterways	230,000			
Supervisory control equipment	1,000,000	15	.04463	44,630
Transmission lines, switchyards, and substations	400,000	50	.00107	428
Pumping Plants 2 through 8 substations	330,000	50	.00107	353
Total				45,726
Total (rounded)				45,700

Power

Project feature	Q/head	Capacity (kW)	Energy use (kWh)	Energy cost 1/	Demand requirement (kWm)	Standby cost 2/	Total power cost
Well field plants (18)		124	1,081,000	$5,300	1,490	$2,000	$7,300
Brine Line No. 1	5 cfs/426'	260	2,270,000	11,100	3,100	4,100	15,300
Brine Line No. 2	5 cfs/318'	200	1,720,000	8,400	2,350	3,100	11,500
Brine Line No. 3	5 cfs/323'	200	1,750,000	8,400	2,420	3,200	11,600
Brine Line No. 4	5 cfs/317'	200	1,720,000	8,400	2,350	3,100	11,500
Brine Line No. 5	5 cfs/317'	200	1,720,000	8,400	2,350	3,100	11,500
Brine Line No. 6	5 cfs/318'	200	1,720,000	8,400	2,350	3,100	11,500
Brine Line No. 7	5 cfs/314'	190	1,700,000	8,300	2,350	3,100	11,400
Brine Line No. 8	5 cfs/300'	190	1,670,000	8,200	2,270	3,000	11,200
		1,764	15,351,000				102,800
Losses and contingency (+5 percent)		1887	2,270,000				5,100
Total annual cost			17,621,000				107,900

1/ CRSP rate of 3.4 mills plus 1.5 mills per kilowatt-hour for wheeling.
2/ CRSP rate: $1.34 per kilowatt-month.

Direct pumping plant
operation and maintenance costs

Pumping plant	Operation costs		Maintenance costs		Total
	Labor	Other	Labor	Other	
Well field (18)	$1,800	$432	$540	$306	$3,078
Brine Line No. 1	537	128	3,018	1,747	5,430
Brine Line No. 2	498	119	2,677	1,550	4,844
Brine Line No. 3	500	119	2,694	1,560	4,873
Brine Line No. 4	497	118	2,674	1,548	4,837
Brine Line No. 5	497	118	2,674	1,548	4,837
Brine Line No. 6	498	119	2,677	1,550	4,844
Brine Line No. 7	496	117	2,663	1,542	4,818
Brine Line No. 8	494	118	2,642	1,530	4,784
Subtotal					42,345
Subtract all labor costs previously listed under personnel costs					-28,076
Total					14,269
Total (rounded)					14,300

Annual cost summary

	Annual cost
Personnel	$94,900
Equipment	39,700
Supplies	27,800
Power	107,900
Major replacements	45,700
Direct pumping plant operation and maintenance costs	14,300
Subtotal	330,300
Wildlife area operation and maintenace costs 1/	2,000
Total	332,300

1/ These costs would be paid by the State of Colorado.

7-1720 (5-72)
Bureau of Reclamation
Formerly Basic Estimate DC-1 Summary

INSTRUCTIONS FOR USE OF THIS FORM ARE CONTAINED IN CHAPTER 6, PART 152 OF THE RECLAMATION INSTRUCTIONS.

PROJECT COST ESTIMATE

Feasibility Estimate

OFFICE PREPARED BY: Western Colorado Projects Office, Durango, Colorado

PROJECT: PARADOX VALLEY UNIT, CO, CRBSCP
Date of Estimate: October 27, 1977
Prices as of: January 1977

Previous Estimate Prices as of Oct. 1976

PROPERTY CLASS	IDENTIFIED PROPERTY	PLANT ACCOUNT	DESCRIPTION	CCE SHEET NUMBERS	LABOR AND MATERIALS BY CONTRACTOR Cost	LABOR AND MATERIALS BY GOVERNMENT Cost	FIELD COST Plant Account	TOTAL FIELD COST Identified Property	OTHER COSTS Identified Property	TOTAL COST Identified Property	TOTAL COST Property Class	TOTAL COST Identified Property
1			2	3	4	5	6	7	8	9	10	11
			PARADOX VALLEY UNIT, COLORADO RIVER BASIN SALINITY CONTROL PROJECT									
			TOTAL PROJECT COST								50,390,000	48,001,000
12			SPECIAL PLANTS								47,900,000	
	01		BRINE WELL FIELD					513,500	1,386,500	1,900,000		1,850,000
		100	Land and Rights	1	155,000		155,000					
		130	Structures and Improvements	1	120,000		120,000					
		140	Roads and Road Structures	2	20,000		20,000					
		152	Waterways	2	170,000		170,000					
		160	Pumps and Prime Movers	2	33,000		33,000					
		170	Accessory Electrical Equipment	3	15,500		15,500					
	02		HYDROGEN SULFIDE STRIPPING PLANT					1,713,100	586,900	2,300,000		2,300,000
		100	Land and Rights	4	3,100		3,100					
		130	Structures and Improvements	4	480,000		480,000					
		152	Waterways	6	230,000		230,000					
		180	Installed Supervisory Control and Communications Equipment	7	1,000,000		1,000,000					
	03		BRINE PIPELINE					4,530,000	1,370,000	5,900,000		5,700,000
		100	Land and Rights	8	30,000		30,000					
		152	Waterways	8	3,200,000		3,200,000					
		153	Waterway Structures	9	1,300,000		1,300,000					
	04		BRINE PIPELINE PUMPING PLANTS					3,670,550	1,129,450	4,800,000		4,700,000
		100	Land and Rights	11	1,050		1,050					
		130	Structures and Improvements	11	1,900,000		1,900,000					
		152	Waterways	16	830,000		830,000					
		160	Pumps and Prime Movers	21	620,000		620,000					
		170	Accessory Electrical Equipment	23	220,000		220,000					
		199	Miscellaneous Installed Equipment	24	99,500		99,500					
	05		RADIUM, DAM, DIKE, AND EVAPORATION POND					27,285,000	5,715,000	33,000,000		31,000,000
		100	Land and Rights	27	1,200,000		1,200,000					
		110	Relocation of Property of Others	27	180,000		180,000					
		120	Clearing Land	27	260,000		260,000					
		140	Roads and Road Structures	28	35,000		35,000					
		151	Dams	28	25,610,000		25,610,000					
			(1) Dam and Dike Structure	28	(25,000,000)		(25,000,000)					
			(2) Combined Spillway and Outlet Works	29	(610,000)		(610,000)					

7-1720 (5-72)
Bureau of Reclamation
Formerly Basic Estimate DC-1 Summary

INSTRUCTIONS FOR USE OF THIS FORM ARE CONTAINED IN CHAPTER 6, PART 152 OF THE RECLAMATION INSTRUCTIONS.

PROJECT COST ESTIMATE

Feasibility Estimate

OFFICE PREPARED BY: Western Colorado Projects Office, Durango, Colorado

PROJECT PARADOX VALLEY UNIT, CO, CRBSCP
Date of Estimate October 27, 1977
Prices as of January 1977

Sheet 2 of 3

Previous Estimate Prices as of Oct. 1976

	PROPERTY CLASS	IDENTIFIED PROPERTY	PLANT ACCOUNT	DESCRIPTION	CCE SHEET NUMBERS	LABOR AND MATERIALS BY CONTRACTOR Cost	LABOR AND MATERIALS BY GOVERNMENT Cost	FIELD COST Plant Account	TOTAL FIELD COST Identified Property	OTHER COSTS Identified Property	TOTAL COST Identified Property	TOTAL COST Property Class	TOTAL COST Identified Property
	1			2	3	4	5	6	7	8	9	10	11
	13			TRANSMISSION LINES, SWITCHYARDS, AND SUBSTATIONS								590,000	
		01		TRANSMISSION LINES AND SUBSTATIONS					456,000	134,000	590,000		580,000
			175	Station Equipment	31	430,000		430,000					
			184	Underground Conductors and Devices	31	26,000		26,000					
	15			GENERAL PROPERTY								565,000	
		01		PERMANENT OPERATING FACILITIES					135,000	40,000	175,000		170,000
			130	Structures and Improvements	32	135,000		135,000					
		02		O&M HOUSING					303,100	86,900	390,000		390,000
			100	Land and Rights	33	2,100		2,100					
			130	Structures and Improvements	33	230,000		230,000					
			140	Roads and Road Structures	33	71,000		71,000					
GL	113			CAPITALIZED MOVABLE EQUIPMENT								1,010,000	
		01		PERMANENT OPERATING FACILITIES EQUIPMENT					325,000	95,000	420,000		420,000
			220	Transportation Equipment	34	72,000		72,000					
			240	Tools, Shop and Garage Equipment	34	13,000		13,000					
			260	Power Operated Equipment	34	240,000		240,000					
		02		SERVICE FACILITIES EQUIPMENT					540,000	50,000	590,000		590,000
			210	Office Equipment	36	200,000		200,000					
			250	Laboratory Equipment	36	340,000		340,000					
GL	115			SERVICE FACILITIES								820,000	
		01		TEMPORARY CAMP					350,000	70,000	420,000		410,000
			130	Structures and Improvements	37	350,000		350,000					
		02		CONSTRUCTION OFFICE					200,000	40,000	240,000		240,000
			130	Structures and Improvements	38	200,000		200,000					
		03		RADIUM FIELD STATION					135,000	25,000	160,000		155,000
			130	Structures and Improvements	39	135,000		135,000					
				DEPRECIATION	39	-780,000		-780,000	-780,000	-0-	-780,000	-780,000	-773,000
				SALVAGE	39	-790,000		-790,000	-790,000	-0-	-790,000	-790,000	-785,000

GPO 835-542

7-1720 (5-72)
Bureau of Reclamation
Formerly Basic Estimate DC-1 Summary

INSTRUCTIONS FOR USE OF THIS FORM ARE CONTAINED IN CHAPTER 6, PART 152 OF THE RECLAMATION INSTRUCTIONS.

PROJECT COST ESTIMATE

Feasibility Estimate

OFFICE PREPARED BY: Western Colorado Projects Office, Durango, Colorado

PROJECT: PARADOX VALLEY UNIT, CO, CRBSCP
Date of Estimate: October 27, 1977
Prices as of: January 1977

Sheet 3 of 3

Previous Estimate Prices as of Oct. 1976

PROPERTY CLASS	IDENTIFIED PROPERTY	PLANT ACCOUNT	DESCRIPTION	CCE SHEET NUMBERS	LABOR AND MATERIALS BY CONTRACTOR	LABOR AND MATERIALS BY GOVERNMENT	FIELD COST	TOTAL FIELD COST	OTHER COSTS	TOTAL COST	TOTAL COST	TOTAL COST
					Cost	Cost	Plant Account	Identified Property	Identified Property	Identified Property	Property Class	Identified Property
1			2	3	4	5	6	7	8	9	10	11
			OTHER PROJECT COSTS:								1,075,000	1,054,000
			INVESTIGATIONS - RECLAMATION FUND	39	455,600			455,600	400	456,000	456,000	456,000
			CULTURAL RESOURCE PROGRAM	39	8,100			8,100	900	9,000	9,000	8,000
			WILDLIFE PROGRAM					506,000	104,000	610,000	610,000	590,000
		100	Land and Rights	40	340,000		340,000					
		130	Structures and Improvements	40	166,000		166,000					
			(1) Fencing Right-of-Way at Radium	40	(61,000)		(61,000)					
			(2) Improvements to Land at Radium	40	(105,000)		(105,000)					

UC-502 (Rev. 7/75)
Bureau of Reclamation

CONSTRUCTION COST ESTIMATE
INDEXED TO PRESENT
Feasibility Estimate

PROJECT PARADOX VALLEY UNIT, CO, CRBSCP
Date of Estimate October 27, 1977
Date of Present Index January 1977

PROPERTY CLASS	IDENTIFIED PROPERTY	PLANT ACCOUNT	DESCRIPTION	FIELD COST -FROM CCE	DATE OF CCE INDEX	COST INDEX CC-E	COST INDEX Present	COST FACTOR	FIELD COST Plant Account	TOTAL FIELD COST Identified Property	OTHER COST	TOTAL COST Identified Property	TOTAL COST Property Class
1			2	3	4	5		6	7	8	9	10	11
			PARADOX VALLEY UNIT, COLORADO RIVER BASIN SALINITY CONTROL PROJECT										
			TOTAL PROJECT COST										50,390,000
12			SPECIAL PLANTS										47,900,000
	01		BRINE WELL FIELD							513,500	1,386,500	1,900,000	
		100	Land and Rights	150,000	Oct. 1976	2.67	2.77	1.04	155,000				
		130	Structures and Improvements	120,000	Oct. 1976	2.08	2.11	1.01	120,000				
		140	Roads and Road Structures	20,000	Oct. 1976	2.02	2.04	1.01	20,000				
		152	Waterways	170,000	Oct. 1976	2.08	2.11	1.01	170,000				
		160	Pumps and Prime Movers	32,000	Oct. 1976	2.27	2.34	1.03	33,000				
		170	Accessory Electrical Equipment	15,500	Oct. 1976	2.12	2.13	1.00	15,500				
	02		HYDROGEN SULFIDE STRIPPING PLANT							1,713,100	586,900	2,300,000	
		100	Land and Rights	3,000	Oct. 1976	2.67	2.77	1.04	3,100				
		130	Structures and Improvements	470,000	Oct. 1976	2.03	2.06	1.01	480,000				
		152	Waterways	230,000	Oct. 1976	2.08	2.11	1.01	230,000				
		180	Installed Supervisory Control and Communication Equipment	1,000,000	Oct. 1976	2.08	2.11	1.01	1,000,000				
	03		BRINE PIPELINE							4,530,000	1,370,000	5,900,000	
		100	Land and Rights	29,000	Oct. 1976	2.67	2.77	1.04	30,000				
		152	Waterways	3,100,000	Oct. 1976	2.15	2.21	1.03	3,200,000				
		153	Waterway Structures	1,250,000	Oct. 1976	2.15	2.21	1.03	1,300,000				
	04		BRINE PIPELINE PUMPING PLANTS							3,670,550	1,129,450	4,800,000	
		100	Land and Rights	1,000	Oct. 1976	2.67	2.77	1.04	1,050				
		130	Structures and Improvements	1,890,000	Oct. 1976	2.03	2.06	1.01	1,900,000				
		152	Waterways	815,000	Oct. 1976	2.20	2.25	1.02	830,000				
		160	Pumps and Prime Movers	604,000	Oct. 1976	2.27	2.34	1.03	620,000				
		170	Accessory Electrical Equipment	220,000	Oct. 1976	2.12	2.13	1.00	220,000				
		199	Miscellaneous Installed Equipment	99,500	Oct. 1976	2.12	2.13	1.00	99,500				
	05		RADIUM DAM, DIKE, AND EVAPORATION POND							27,285,000	5,715,000	33,000,000	
		100	Land and Rights	1,150,000	Oct. 1976	2.67	2.77	1.04	1,200,000				
		110	Relocation of Property of Others	180,000	Oct. 1976	2.02	2.04	1.01	180,000				
		120	Clearing Land	260,000	Oct. 1976	2.08	2.11	1.01	260,000				
		140	Roads and Road Structures	35,000	Oct. 1976	2.02	2.04	1.01	35,000				
		151	Dams	24,600,000	Oct. 1976				25,610,000				
			(1) Dam and Dike Structure	(24,000,000)	Oct. 1976	1.96	2.01	1.03	(25,000,000)				
			(2) Combined Spillway and Outlet Works	(600,000)	Oct. 1976	2.10	2.13	1.01	(610,000)				

UC-502 (Rev. 7/75)
Bureau of Reclamation

CONSTRUCTION COST ESTIMATE
INDEXED TO PRESENT
Feasibility Estimate

PROJECT PARADOX VALLEY UNIT, CO, CRBSCP
Date of Estimate October 27, 1977
Date of Present Index January 1977

PROPERTY CLASS	IDENTIFIED PROPERTY	PLANT ACCOUNT	DESCRIPTION	FIELD COST -FROM CCE	DATE OF CCE INDEX	COST INDEX CC-E	COST INDEX Present	COST FACTOR	FIELD COST Plant Account	TOTAL FIELD COST Identified Property	OTHER COST	TOTAL COST Identified Property	TOTAL COST Property Class
1			2	3	4	5		6	7	8	9	10	11
13			TRANSMISSION LINES, SWITCHYARDS, AND SUBSTATIONS										590,000
	01		TRANSMISSION LINES AND SUBSTATIONS							456,000	134,000	590,000	
		175	Station Equipment	420,000	Oct. 1976	2.01	2.04	1.01	430,000				
		184	Underground Conductors and Devices	26,000	Oct. 1976	2.08	2.11	1.01	26,000				
15			GENERAL PROPERTY										565,000
	01		PERMANENT OPERATING FACILITIES							135,000	40,000	175,000	
		130	Structures and Improvements	130,000	Oct. 1976	2.12	2.16	1.02	135,000				
	02		O&M HOUSING							303,100	86,900	390,000	
		100	Land and Rights	2,000	Oct. 1976	2.67	2.77	1.04	2,100				
		130	Structures and Improvements	225,000	Oct. 1976	2.12	2.16	1.02	230,000				
		140	Roads and Road Structures	70,000	Oct. 1976	2.09	2.12	1.01	71,000				
GL 113			CAPITALIZED MOVABLE EQUIPMENT										1,010,000
	01		PERMANENT OPERATING FACILITIES EQUIPMENT							325,000	95,000	420,000	
		220	Transportation Equipment	71,000	Oct. 1976	2.08	2.11	1.01	72,000				
		240	Tools, Shop and Garage Equipment	13,000	Oct. 1976	2.08	2.11	1.01	13,000				
		260	Power Operated Equipment	240,000	Oct. 1976	2.08	2.11	1.01	240,000				
	02		SERVICE FACILITIES EQUIPMENT							540,000	50,000	590,000	
		210	Office Equipment	200,000	Oct. 1976	2.08	2.11	1.01	200,000				
		250	Laboratory Equipment	340,000	Oct. 1976	2.08	2.11	1.01	340,000				
GL 115			SERVICE FACILITIES										820,000
	01		TEMPORARY CAMP							350,000	70,000	420,000	
		130	Structures and Improvements	340,000	Oct. 1976	2.12	2.16	1.02	350,000				
	02		CONSTRUCTION OFFICE							200,000	40,000	240,000	
		130	Structures and Improvements	200,000	Oct. 1976	2.12	2.16	1.02	200,000				
	03		RADIUM FIELD STATION							135,000	25,000	160,000	
		130	Structures and Improvements	130,000	Oct. 1976	2.12	2.16	1.02	135,000				
			DEPRECIATION	-773,000	Oct. 1976	2.08	2.11	1.01	-780,000	-780,000	-0-	-780,000	-780,000
			SALVAGE	-785,000	Oct. 1976	2.08	2.11	1.01	-790,000	-790,000	-0-	-790,000	-790,000

UC-502 (Rev. 7/75)
Bureau of Reclamation

CONSTRUCTION COST ESTIMATE
INDEXED TO PRESENT
Feasibility Estimate

PROJECT PARADOX VALLEY UNIT CO, CRBSCP
Date of Estimate October 27, 1977
Date of Present Index January 1977

Sheet 3 of 3

PROPERTY CLASS	IDENTIFIED PROPERTY	PLANT ACCOUNT	DESCRIPTION	FIELD COST -FROM CCE	DATE OF CCE INDEX	COST INDEX CC-E	COST INDEX Present	COST FACTOR	FIELD COST Plant Account	TOTAL FIELD COST Identified Property	OTHER COST	TOTAL COST Identified Property	TOTAL COST Property Class
	1		2	3	4	5		6	7	8	9	10	11
			OTHER PROJECT COSTS										1,075,000
			INVESTIGATIONS - RECLAMATION FUND	455,600	-	-	-	-	455,600	455,600	400	456,000	456,000
			CULTURAL RESOURCE PROGRAM	8,000	Oct. 1976	2.08	2.11	1.01	8,100	8,100	900	9,000	9,000
			WILDLIFE PROGRAM							506,000	104,000	610,000	610,000
		100	Land and Rights	330,000	Oct. 1976	2.67	2.77	1.04	340,000				
		130	Structures and Improvements	165,000	Oct. 1976				166,000				
			(1) Fencing Right-of-Way at Radium	(60,000)	Oct. 1976	2.08	2.11	1.01	(61,000)				
			(2) Improvements to Land at Radium	(105,000)	Oct. 1976	2.08	2.11	1.01	(105,000)				

7-1720 (5-72)
Bureau of Reclamation
Formerly Basic Estimate DC-1 Summary

INSTRUCTIONS FOR USE OF THIS FORM ARE CONTAINED IN CHAPTER 4, PART 152 OF THE RECLAMATION INSTRUCTIONS

PROJECT COST ESTIMATE
Feasibility Estimate

OFFICE PREPARED BY:
Western Colorado Projects Office
Durango, Colorado

PROJECT PARADOX VALLEY UNIT, CO, CRBSCP
Date of Estimate May 23, 1977
Prices as of October 1976

Sheet 1 of 3

Previous Estimate Prices as of None

PROPERTY CLASS	IDENTIFIED PROPERTY	PLANT ACCOUNT	DESCRIPTION	CCE SHEET NUMBERS	LABOR AND MATERIALS BY CONTRACTOR Cost	LABOR AND MATERIALS BY GOVERNMENT Cost	FIELD COST Plant Account	TOTAL FIELD COST Identified Property	OTHER COSTS Identified Property	TOTAL COST Identified Property	TOTAL COST Property Class	TOTAL COST Identified Property
	1		2	3	4	5	6	7	8	9	10	11
			PARADOX VALLEY UNIT, COLORADO RIVER BASIN SALINITY CONTROL PROJECT									
			TOTAL PROJECT COST								48,001,000	
12			SPECIAL PLANTS								45,550,000	
	01		BRINE WELL FIELD					507,500	1,342,500	1,850,000		
		100	Land and Rights	1	150,000		150,000					
		130	Structures and Improvements	1	120,000		120,000					
		140	Roads and Road Structures	2	20,000		20,000					
		152	Waterways	2	170,000		170,000					
		160	Pumps and Prime Movers	2	32,000		32,000					
		170	Accessory Electrical Equipment	3	15,500		15,500					
	02		HYDROGEN SULFIDE STRIPPING PLANT					1,703,000	597,000	2,300,000		
		100	Land and Rights	4	3,000		3,000					
		130	Structures and Improvements	4	470,000		470,000					
		152	Waterways	6	230,000		230,000					
		180	Installed Supervisory Control and Communications Equipment	7	1,000,000		1,000,000					
	03		BRINE PIPELINE					4,379,000	1,321,000	5,700,000		
		100	Land and Rights	8	29,000		29,000					
		152	Waterways	8	3,100,000		3,100,000					
		153	Waterway Structures	9	1,250,000		1,250,000					
	04		BRINE PIPELINE PUMPING PLANTS					3,629,500	1,070,500	4,700,000		
		100	Land and Rights	11	1,000		1,000					
		130	Structures and Improvements	11	1,890,000		1,890,000					
		152	Waterways	16	815,000		815,000					
		160	Pumps and Prime Movers	21	604,000		604,000					
		170	Accessory Electrical Equipment	23	220,000		220,000					
		199	Miscellaneous Installed Equipment	24	99,500		99,500					
	05		RADIUM DAM, DIKE, AND EVAPORATION POND					26,225,000	4,775,000	31,000,000		
		100	Land and Rights	27	1,150,000		1,150,000					
		110	Relocation of Property of Others	27	180,000		180,000					
		120	Clearing Land	27	260,000		260,000					
		140	Roads and Road Structures	28	35,000		35,000					
		151	Dams	28	24,600,000		24,600,000					
			(1) Dam and Dike Structure	28	(24,000,000)		(24,000,000)					
			(2) Combined Spillway and Outlet Works	29	(600,000)		(600,000)					

7-1720 (5-72)
Bureau of Reclamation
Formerly Basic Estimate DC-1 Summary

INSTRUCTIONS FOR USE OF THIS FORM ARE CONTAINED IN CHAPTER 6, PART 152 OF THE RECLAMATION INSTRUCTIONS

PROJECT COST ESTIMATE

Feasibility Estimate

OFFICE PREPARED BY: Western Colorado Projects Office, Durango, Colorado

PROJECT PARADOX VALLEY UNIT, CO, CRBSCP
Date of Estimate May 23, 1977
Prices as of October 1976

Sheet 2 of 3

Previous Estimate Prices as of None

	PROPERTY CLASS	IDENTIFIED PROPERTY	PLANT ACCOUNT	DESCRIPTION	CCE SHEET NUMBERS	LABOR AND MATERIALS BY CONTRACTOR Cost	LABOR AND MATERIALS BY GOVERNMENT Cost	FIELD COST Plant Account	TOTAL FIELD COST Identified Property	OTHER COSTS Identified Property	TOTAL COST Identified Property	TOTAL COST Property Class	TOTAL COST Identified Property
	1			2	3	4	5	6	7	8	9	10	11
	13			TRANSMISSION LINES, SWITCHYARDS, AND SUBSTATIONS								580,000	
		01		TRANSMISSION LINES AND SUBSTATIONS					446,000	134,000	580,000		
			175	Station Equipment	31	420,000		420,000					
			184	Underground Conductors and Devices	31	26,000		26,000					
	15			GENERAL PROPERTY								560,000	
		01		PERMANENT OPERATING FACILITIES					130,000	40,000	170,000		
			130	Structures and Improvements	32	130,000		130,000					
		02		O&M HOUSING					297,000	93,000	390,000		
			100	Land and Rights	33	2,000		2,000					
			130	Structures and Improvements	33	225,000		225,000					
			140	Roads and Road Structures	33	70,000		70,000					
GL	113			CAPITALIZED MOVABLE EQUIPMENT								1,010,000	
		01		PERMANENT OPERATING FACILITIES EQUIPMENT					324,000	96,000	420,000		
			220	Transportation Equipment	34	71,000		71,000					
			240	Tools, Shop and Garage Equipment	34	13,000		13,000					
			260	Power Operated Equipment	34	240,000		240,000					
		02		SERVICE FACILITIES EQUIPMENT					540,000	50,000	590,000		
			210	Office Equipment	36	200,000		200,000					
			250	Laboratory Equipment	36	340,000		340,000					
GL	115			SERVICE FACILITIES								805,000	
		01		TEMPORARY CAMP					340,000	70,000	410,000		
			130	Structures and Improvements	37	340,000		340,000					
		02		CONSTRUCTION OFFICE					200,000	40,000	240,000		
			130	Structures and Improvements	38	200,000		200,000					
		03		RADIUM FIELD STATION					130,000	25,000	155,000		
			130	Structures and Improvements	39	130,000		130,000					
				DEPRECIATION	39	-773,000		-773,000	-773,000	-0-	-773,000	-773,000	
				SALVAGE	39	-785,000		-785,000	-785,000	-0-	-785,000	-785,000	

7-1720 (5-72)
Bureau of Reclamation
Formerly Basic Estimate DC-1 Summary

INSTRUCTIONS FOR USE OF THIS FORM ARE CONTAINED IN CHAPTER 6, PART 152 OF THE RECLAMATION INSTRUCTIONS

PROJECT COST ESTIMATE

Feasibility Estimate

OFFICE PREPARED BY: Western Colorado Projects Office, Durango, Colorado

PROJECT PARADOX VALLEY UNIT, CO, CRBSCP
Date of Estimate May 23, 1977
Prices as of October 1976

Sheet 3 of 3

Previous Estimate Prices as of None

PROPERTY CLASS	IDENTIFIED PROPERTY	PLANT ACCOUNT	DESCRIPTION	CCE SHEET NUMBERS	LABOR AND MATERIALS BY CONTRACTOR Cost	LABOR AND MATERIALS BY GOVERNMENT Cost	FIELD COST Plant Account	TOTAL FIELD COST Identified Property	OTHER COSTS Identified Property	TOTAL COST Identified Property	TOTAL COST Property Class	TOTAL COST Identified Property
1			2	3	4	5	6	7	8	9	10	11
			OTHER PROJECT COSTS:								1,054,000	
			INVESTIGATIONS - RECLAMATION FUND	39	455,600		455,600	455,600	400	456,000	456,000	
			CULTURAL RESOURCE PROGRAM	39	8,000		8,000	8,000	0	8,000	8,000	
			WILDLIFE PROGRAM					495,000	95,000	590,000	590,000	
		100	Land and Rights	40	330,000		330,000					
		130	Structures and Improvements	40	165,000		165,000					
			(1) Fencing Right-of-Way at Radium	40	(60,000)		(60,000)					
			(2) Improvements to Land at Radium	40	(105,000)		(105,000)					

GPO 835-542

7-1432 (5-72)
Bureau of Reclamation
Formerly Basic Estimate DC-1

INSTRUCTIONS FOR USE OF THIS FORM ARE CONTAINED IN CHAPTER 6, PART 152 OF THE RECLAMATION INSTRUCTIONS

BRINE WELL FIELD

CONSTRUCTION COST ESTIMATE

Feasibility Estimate

OFFICE PREPARED BY: Western Colorado Projects Office, Durango, Colorado

PROJECT PARADOX VALLEY UNIT, CO, CRBSCP
Date of Estimate May 23, 1977
Prices as of October 1976

12.01.100,130 Sheet 1 of 40

PROPERTY CLASS	IDENTIFIED PROPERTY	PLANT ACCOUNT	PAY ITEM	DESCRIPTION	QUANTITY	UNIT	LABOR AND MATERIALS BY CONTRACTOR Unit Price	LABOR AND MATERIALS BY CONTRACTOR Amount	LABOR AND MATERIALS BY GOVERNMENT Unit Price	LABOR AND MATERIALS BY GOVERNMENT Amount	FIELD COST Plant Account	TOTAL FIELD COST Identified Property	OTHER COSTS Identified Property	TOTAL COST Identified Property
		1		2	3		4		5		6	7	8	9
				PARADOX VALLEY UNIT, COLORADO RIVER BASIN SALINITY CONTROL PROJECT										
				TOTAL PROJECT COST										49,401,000
12				SPECIAL PLANTS										
	01			BRINE WELL FIELD - 23 brine production wells located adjacent to the Dolores River in Paradox Valley								507,500	1,342,500	1,850,000
		100		Land and Rights							150,000			
			.1	Acquisition of private cropland	4	ac	900.	3,600						
			2	Acquisition of private subirrigated pasture	29	ac	700.	20,300						
			3	Acquisition of private grassland	19	ac	500.	9,500						
			4	Acquisition of private shrubland	125	ac	400.	50,000						
			5	Acquisition of private tamarisk	99	ac	300.	29,700						
			6	Acquisition of private riverland	30	ac	200.	6,000						
			7	Acquisition of public land	60	ac	0.	0						
			8	Allowance for unlisted items (10%)	Lump Sum	ls	1s	10,900						
				Subtotal				130,000						
				Contingencies (15%)				20,000						
				Field Cost - 12.01.100				150,000						
		130		Structures and Improvements							120,000			
			1	Constructing shelter housing for brine wells	23	ea	4,000	92,000						
			2	Allowance for unlisted items (10%)	Lump Sum	ls	1s	8,000						
				Subtotal				100,000						
				Contingencies (20%)				20,000						
				Field Cost - 12.01.130				120,000						

7-1432 (5-72)
Bureau of Reclamation
Formerly Basic Estimate DC-1

INSTRUCTIONS FOR USE OF THIS FORM ARE CONTAINED IN CHAPTER 6, PART 152 OF THE RECLAMATION INSTRUCTIONS

BRINE WELL FIELD

CONSTRUCTION COST ESTIMATE

Feasibility Estimate

OFFICE PREPARED BY: Western Colorado Projects Office, Durango, Colorado

PROJECT PARADOX VALLEY UNIT, CO, CRBSCP
Date of Estimate May 23, 1977
Prices as of October 1976

12.01.140,152,160 Sheet 2 of 40

PROPERTY CLASS	IDENTIFIED PROPERTY	PLANT ACCOUNT	PAY ITEM	DESCRIPTION	QUANTITY	UNIT	LABOR AND MATERIALS BY CONTRACTOR Unit Price	LABOR AND MATERIALS BY CONTRACTOR Amount	LABOR AND MATERIALS BY GOVERNMENT Unit Price	LABOR AND MATERIALS BY GOVERNMENT Amount	FIELD COST Plant Account	TOTAL FIELD COST Identified Property	OTHER COSTS Identified Property	TOTAL COST Identified Property
	1			2	3		4		5		6	7	8	9
12	01			BRINE WELL FIELD (continued)										
		140		Roads and Road Structures							20,000			
			1	Constructing additional well field access roads	1	mi	15,000	15,000						
			2	Allowance for unlisted items (10%)	Lump Sum	ls	1s	1,500						
				Subtotal				16,500						
				Contingencies (20%)				3,500						
				Field Cost - 12.01.140				20,000						
		152		Waterways							170,000			
			1	Drilling, furnishing and installing materials for, and developing additional brine wells	Lump Sum	ls	1s	70,000						
			2	Furnishing and laying class 15B125 plastic pipe	4,700	lf	12.00	56,400						
			3	Allowance for unlisted items (10%)	Lump Sum	ls	1s	13,600						
				Subtotal				140,000						
				Contingencies (20%)				30,000						
				Field Cost - 12.01.152				170,000						
		160		Pumps and Prime Movers							32,000			
			1	Furnishing and installing pumps, valves, flowmeters, and piping for additional brine wells	Lump Sum	ls	1s	25,000						
			2	Allowance for unlisted items (10%)	Lump Sum	ls	1s	2,000						
				Subtotal				27,000						
				Contingencies (20%)				5,000						
				Field Cost - 12.01.160				32,000						

BRINE WELL FIELD

CONSTRUCTION COST ESTIMATE

Feasibility Estimate

OFFICE PREPARED BY: Western Colorado Projects Office, Durango, Colorado

PROJECT: PARADOX VALLEY UNIT, CO, CRBSCP
Date of Estimate: May 23, 1977
Prices as of: October 1976

12.01.170 — Sheet 3 of 40

PROPERTY CLASS	IDENTIFIED PROPERTY	PLANT ACCOUNT	PAY ITEM	DESCRIPTION	QUANTITY	UNIT	LABOR AND MATERIALS BY CONTRACTOR: Unit Price	LABOR AND MATERIALS BY CONTRACTOR: Amount	LABOR AND MATERIALS BY GOVERNMENT: Unit Price	LABOR AND MATERIALS BY GOVERNMENT: Amount	FIELD COST: Plant Account	TOTAL FIELD COST: Identified Property	OTHER COSTS: Identified Property	TOTAL COST: Identified Property
		1		2	3		4		5		6	7	8	9
12	01			BRINE WELL FIELD (continued)										
		170		Accessory Electrical Equipment							15,500			
			1	Electrical equipment	Lump Sum	1s	1s	12,000						
			2	Allowance for unlisted items (10%)	Lump Sum	1s	1s	1,000						
				Subtotal				13,000						
				Contingencies (20%)				2,500						
				Field Cost - 12.01.170				15,500						
				FACILITATING SERVICES									(19,000)	
				INVESTIGATIONS									(17,000)	
				DESIGN AND SPECIFICATIONS									(1,050,000)	
				CONSTRUCTION SUPERVISION									(256,500)	

7-1432 (5-72)
Bureau of Reclamation
Formerly Basic Estimate DC-1

INSTRUCTIONS FOR USE OF THIS FORM ARE CONTAINED IN CHAPTER 8, PART 152 OF THE RECLAMATION INSTRUCTIONS

HYDROGEN SULFIDE STRIPPING PLANT

CONSTRUCTION COST ESTIMATE

Feasibility Estimate

OFFICE PREPARED BY: Office of Design and Construction, E&R Center

PROJECT: PARADOX VALLEY UNIT, CO, CRBSCP
Date of Estimate: April 26, 1977
Prices as of: October 1976

12.02.100, 130 — Sheet 4 of 40

PROPERTY CLASS	IDENTIFIED PROPERTY	PLANT ACCOUNT	PAY ITEM	DESCRIPTION	QUANTITY	UNIT	LABOR AND MATERIALS BY CONTRACTOR: Unit Price	LABOR AND MATERIALS BY CONTRACTOR: Amount	LABOR AND MATERIALS BY GOVERNMENT: Unit Price	LABOR AND MATERIALS BY GOVERNMENT: Amount	FIELD COST: Plant Account	TOTAL FIELD COST: Identified Property	OTHER COSTS: Identified Property	TOTAL COST: Identified Property
		1		2	3		4		5		6	7	8	9
12	02			HYDROGEN SULFIDE STRIPPING PLANT - Indoor plant, removes toxic H_2S gas from brine before brine is pumped to Radium Evaporation Pond.								1,703,000	597,000	2,300,000
		100		Land and Rights							3,000			
			1	Acquisition of private non-irrigated land	6	ac	400.	2,400						
			2	Allowance for unlisted items (10%)	Lump Sum	1s	1s	200						
				Subtotal				2,600						
				Contingencies (15%)				400						
				Field Cost - 12.02.100				3,000						
		130		Structures and Improvements							470,000			
			1	Excavation for yard site and landscaping	8,100	cy	3.00	24,300						
			2	Compacted embankment	2,800	cy	1.20	3,360						
			3	Embankment material	3,300	cy	1.00	3,300						
			4	Waste material	4,800	26	2.00	9,600						
			5	Irrigation system	22,000	sf	0.30	6,600						
			6	Turf seeding	22,000	sf	0.05	1,100						
			7	Planted shrubs	40	ea	30.00	1,200						
			8	Planted trees	35	ea	100.00	3,500						
			9	Tree guying	35	ea	15.00	525						
			10	Bituminous surfacing, 2-inch with 6-inch crushed rock base	7,000	sf	0.50	3,500						
			11	Concrete paving, 4-inch thick with 3-inch crushed rock base	1,850	sf	2.50	4,625						
			12	Concrete curb and gutter	460	lf	2.30	1,058						
			13	Paint stripes on parking lot	260	sf	0.30	78						
			14	Herbicide	53,000	sf	0.05	2,650						
			15	Crushed rock yard surfacing, 6-inch	980	cy	12.00	11,760						
			16	Chain link fence, 7-foot	900	lf	12.00	10,800						
			17	Sliding gate, 20-foot	1	ea	650.00	650						
			18	Concrete sign, 5 ft. by 10 ft.	1	ea	800.00	800						
			19	Aluminum flagpole, 35 ft.	1	ea	1,200.00	1,200						
			20	Luminar light fixture, 16 foot	4	ea	500.00	2,000						

7-1432 (5-72)
Bureau of Reclamation
Formerly Basic Estimate DC-1

INSTRUCTIONS FOR USE OF THIS FORM ARE CONTAINED IN CHAPTER 6, PART 152 OF THE RECLAMATION INSTRUCTIONS

HYDROGEN SULFIDE STRIPPING PLANT

CONSTRUCTION COST ESTIMATE

Feasibility Estimate

OFFICE PREPARED BY: Office of Design and Construction E&R Center

PROJECT PARADOX VALLEY UNIT, CO, CRBSCP
Date of Estimate April 26, 1977
Prices as of October 1976

12.02.130 Sheet 5 of 40

PROPERTY CLASS	IDENTIFIED PROPERTY	PLANT ACCOUNT	PAY ITEM	DESCRIPTION	QUANTITY	UNIT	LABOR AND MATERIALS BY CONTRACTOR Unit Price	LABOR AND MATERIALS BY CONTRACTOR Amount	LABOR AND MATERIALS BY GOVERNMENT Unit Price	LABOR AND MATERIALS BY GOVERNMENT Amount	FIELD COST Plant Account	TOTAL FIELD COST Identified Property	OTHER COSTS Identified Property	TOTAL COST Identified Property
1				2	3		4		5		6	7	8	9
12	02			HYDROGEN SULFIDE STRIPPING PLANT (continued)										
		130		Structures and Improvements (continued)										
			21	Excavation for structure	280	cy	4.00	1,120						
			22	Backfill	170	cy	2.00	340						
			23	Gravelfill	140	cy	15.00	2,100						
			24	Concrete footing	40	cy	180.00	7,200						
			25	Concrete floor slab	140	cy	150.00	21,000						
			26	Cement	110	ton	70.00	7,700						
			27	Reinforcement	1,100	lb	0.50	550						
			28	Welded wire mesh	2,900	lb	0.80	2,320						
			29	Expansion joint	470	lf	2.00	940						
			30	Precast prestressed wall	1,000	lf	70.00	70,000						
			31	Precast prestressed roof	900	lf	70.00	63,000						
			32	Hollow concrete unit, 8 inch	200	sf	4.00	800						
			33	Precast concrete coping	20	lf	6.00	120						
			34	Masonry cement	0.5	ton	70.00	35						
			35	Urethane, 1-1/2 inch	8,300	sf	1.50	12,450						
			36	Urethane foam roof, 4 inch	7,300	sf	3.00	21,900						
			37	Aluminum flashing	460	sf	2.00	920						
			38	Metal facing panel	1,500	sf	2.50	3,750						
			39	Downspout, 4-inch galvanized	100	lf	1.80	180						
			40	Insulated metal wall panel	1,200	sf	9.00	10,800						
			41	Structural steel columns	2,100	lb	1.50	3,150						
			42	Beams and bracing	1,800	lb	1.50	2,700						
			43	Miscellaneous connections	Lump Sum	ls	ls	1,000						
			44	Hollow metal door, 3-0 by 7-0	3	ea	400.00	1,200						
			45	Solid wood door, 3-0 by 6-8	4	ea	600.00	2,400						
			46	Door frames and hardware	7	ea	150.00	1,050						
			47	Steel overhead door, 16-0 by 16-0	1	ea	3,000.00	3,000						
			48	Drywall ceiling, suspended	340	sf	2.00	680						
			49	Lay-in suspended acoustic ceiling	670	sf	0.50	335						
			50	Metal studwall, 3-5/8-inch with 5/8-inch dry wall, both sides	770	sf	2.50	1,925						
			51	Metal furring channel, 1-1/2-inch at 2'-0" O.C.	6,000	sf	1.00	6,000						
			52	Drywall, 1/2-inch	6,000	sf	0.80	4,800						
			53	Ceramic tile, wall	240	sf	3.50	840						
			54	Ceramic tile, floor	63	sf	3.50	221						
			55	Ceramic tile, cove base	60	lf	6.50	390						
			56	Vinyl asbestos tile	670	sf	1.50	1,005						
			57	Rubber cove base	500	lf	1.30	650						
			58	Paint drywall	7,600	sf	0.50	3,800						
			59	Cast iron roof drain, 6-inch	2	ea	400.00	800						

7-1432 (5-72)
Bureau of Reclamation
Formerly Basic Estimate DC 1

INSTRUCTIONS FOR USE OF THIS FORM ARE CONTAINED IN CHAPTER 6, PART 152 OF THE RECLAMATION INSTRUCTIONS

HYDROGEN SULFIDE STRIPPING PLANT

CONSTRUCTION COST ESTIMATE

Feasibility Estimate

OFFICE PREPARED BY: Office of Design and Construction E&R Center

PROJECT PARADOX VALLEY UNIT, CO, CRBSCP
Date of Estimate April 26, 1977
Prices as of October 1976

12.02.130, 152 Sheet 6 of 40

PROPERTY CLASS	IDENTIFIED PROPERTY	PLANT ACCOUNT	PAY ITEM	DESCRIPTION	QUANTITY	UNIT	LABOR AND MATERIALS BY CONTRACTOR Unit Price	LABOR AND MATERIALS BY CONTRACTOR Amount	LABOR AND MATERIALS BY GOVERNMENT Unit Price	LABOR AND MATERIALS BY GOVERNMENT Amount	FIELD COST Plant Account	TOTAL FIELD COST Identified Property	OTHER COSTS Identified Property	TOTAL COST Identified Property
1				2	3		4		5		6	7	8	9
12	02			HYDROGEN SULFIDE STRIPPING PLANT (continued)										
		130		Structures and Improvements (continued)										
			60	Floor drain	2	ea	200.00	400						
			61	Water closet	1	ea	600.00	600						
			62	Lavatory	1	ea	500.00	500						
			63	Hot water heater	1	ea	600.00	600						
			64	Drinking fountain	1	ea	550.00	550						
			65	Allowance for unlisted items (10%)	Lump sum	ls	ls	31,573						
				Subtotal				390,000						
				Contingencies (20%)				80,000						
				Field Cost - 12.02.130				470,000						
		152		Waterways							230,000			
			1	Aluminum bronze pipe, 3, 6 and 10 inch	6,800	lb	4.00	27,200						
			2	Steel pipe, 2 and 3 inch	1,350	lb	0.80	1,080						
			3	Galvanized steel vent pipe, 6 inch	1,100	lb	1.80	1,980						
			4	PVC pipe and valves	Lump sum	ls	ls	150						
			5	Motor operated butterfly valves, 10-inch, aluminum bronze material	4	ea	2300.00	9,200						
			6	Motor operated butterfly valves, 6-inch, aluminum bronze material	8	ea	1000.00	8,000						
			7	Pressure relief valves, 6-inch, aluminum bronze material	4	ea	800.00	3,200						
			8	Check valves, 3-inch, aluminum bronze material	4	ea	180.00	720						
			9	Motor operated butterfly valves, 2-inch steel	6	ea	180.00	1,080						
			10	Close mesh grating, "x-bar," steel	2,100	lb	2.50	5,250						
			11	Hopper feed pipe, 4-inch steel	170	lb	0.80	136						
			12	Air compressors and air purifiers, two each	Lump sum	ls	ls	40,000						
			13	Aeration tanks, 10,000-gallon each	13,500	lb	3.00	40,500						
			14	Dome diffuser seration system, 368 domes	370	ea	70.00	25,900						
			15	Dry chemical volumetric feeder, chemical dissolving tank, transition hopper, cylindrical storage hopper, low speed mechanical mixer and hopper dust collector	Lump sum	ls	ls	12,000						
			16	Centrifugal pump, 3 gpm at 10 psi	1	ea	250.00	250						
			17	Allowance for unlisted items (10%)	Lump sum	ls	ls	18,354						
				Subtotal				195,000						
				Contingencies (20%)				35,000						
				Field Cost - 12.02.152				230,000						

HYDROGEN SULFIDE STRIPPING PLANT

CONSTRUCTION COST ESTIMATE

Feasibility Estimate

OFFICE PREPARED BY: Office of Design and Construction, E&R Center

PROJECT: PARADOX VALLEY UNIT, CO, CRBSCP
Date of Estimate: April 26, 1977
Prices as of: October 1976

12.02.180

PROPERTY CLASS	IDENTIFIED PROPERTY	PLANT ACCOUNT	PAY ITEM	DESCRIPTION	QUANTITY	UNIT	LABOR AND MATERIALS BY CONTRACTOR Unit Price	LABOR AND MATERIALS BY CONTRACTOR Amount	LABOR AND MATERIALS BY GOVERNMENT Unit Price	LABOR AND MATERIALS BY GOVERNMENT Amount	FIELD COST Plant Account	TOTAL FIELD COST Identified Property	OTHER COSTS Identified Property	TOTAL COST Identified Property
1				2	3		4		5		6	7	8	9
12	02			HYDROGEN SULFIDE STRIPPING PLANT (continued)										
		180		Installed Supervisory Control and Communications Equipment							1,000,000			
			1	Equipment control system	Lump sum	ls	1s	750,000						
			2	Allowance for unlisted items (10%)	Lump sum	ls	1s	80,000						
				Subtotal				830,000						
				Contingencies (20%)				170,000						
				Field Cost - 12.02.180				1,000,000						
				FACILITATING SERVICES									(62,000)	
				INVESTIGATIONS									(57,000)	
				DESIGN AND SPECIFICATIONS									(350,000)	
				CONSTRUCTION SUPERVISION									(128,000)	

BRINE PIPELINE

CONSTRUCTION COST ESTIMATE

Feasibility Estimate

OFFICE PREPARED BY: Office of Design and Construction, E&R Center

PROJECT: PARADOX VALLEY UNIT, CO, CRBSCP
Date of Estimate: February 3, 1977
Prices as of: October 1976

12.03.100,152

PROPERTY CLASS	IDENTIFIED PROPERTY	PLANT ACCOUNT	PAY ITEM	DESCRIPTION	QUANTITY	UNIT	LABOR AND MATERIALS BY CONTRACTOR Unit Price	LABOR AND MATERIALS BY CONTRACTOR Amount	LABOR AND MATERIALS BY GOVERNMENT Unit Price	LABOR AND MATERIALS BY GOVERNMENT Amount	FIELD COST Plant Account	TOTAL FIELD COST Identified Property	OTHER COSTS Identified Property	TOTAL COST Identified Property
1				2	3		4		5		6	7	8	9
12	03			BRINE PIPELINE - Conveys brine from H_2S Plant to Radium Evaporation Pond, 20.5 miles long, 5 cfs capacity.								4,379,000	1,321,000	5,700,000
		100		Land and Rights							29,000			
			1	Acquisition of private shrubland	36	ac	400.	14,400						
			2	Acquisition of private grassland	1	ac	500.	500						
			3	Acquisition of construction easement on private shrubland	36	ac	200.	7,200						
			4	Acquisition of construction easement on private grassland	1	ac	250.	250						
			5	Acquisition of public land	125	ac	0.	0						
			6	Allowance for unlisted items (10%)	Lump sum	ls	1s	2,650						
				Subtotal				25,000						
				Contingencies (15%)				4,000						
				Field Cost - 12.03.100				29,000						
		152		Waterways							3,100,000			
			1	Excavation for pipe trenches	163,000	cy	2.50	407,500						
			2	Backfill in pipe trenches	154,000	cy	1.25	192,500						
				Furnishing and laying the following symbol pipe:										
			3	15B50	2,400	lf	12.00	28,800						
			4	15C50	1,700	lf	13.00	22,100						
			5	15B100	5,300	lf	13.00	68,900						
			6	15C100	1,650	lf	13.50	22,275						
			7	15B150	9,000	lf	14.00	126,000						
			8	15C150	2,400	lf	14.00	33,600						
			9	15B200	7,100	lf	15.00	106,500						
			10	15C200	1,650	lf	15.50	25,575						
			11	15B250	6,000	lf	15.50	93,000						
			12	15C250	1,450	lf	16.00	23,200						
			13	15B300	7,700	lf	15.50	119,350						
			14	15C300	1,900	lf	16.50	31,350						
			15	15B350	8,100	lf	16.50	133,650						
			16	15C350	1,400	lf	16.50	23,100						
			17	15D350	630	lf	17.00	10,710						
			18	15B400	5,000	lf	17.00	85,000						
			19	15C400	2,750	lf	17.50	48,125						

7-1432 (5-72)
Bureau of Reclamation
Formerly Basic Estimate DC-1

INSTRUCTIONS FOR USE OF THIS FORM ARE CONTAINED IN CHAPTER 6, PART 152 OF THE RECLAMATION INSTRUCTIONS

BRINE PIPELINE

CONSTRUCTION COST ESTIMATE

Feasibility Estimate

OFFICE PREPARED BY: Office of Design and Construction, E&R Center

PROJECT: PARADOX VALLEY UNIT, CO, CRBSCP
Date of Estimate: February 3, 1977
Prices as of: October 1976

12.03.152,153

PROPERTY CLASS	IDENTIFIED PROPERTY	PLANT ACCOUNT	PAY ITEM	DESCRIPTION	QUANTITY	UNIT	LABOR AND MATERIALS BY CONTRACTOR Unit Price	LABOR AND MATERIALS BY CONTRACTOR Amount	LABOR AND MATERIALS BY GOVERNMENT Unit Price	LABOR AND MATERIALS BY GOVERNMENT Amount	FIELD COST Plant Account	TOTAL FIELD COST Identified Property	OTHER COSTS Identified Property	TOTAL COST Identified Property
		1		2	3		4		5		6	7	8	9
12	03			BRINE PIPELINE (continued)										
		152		Waterways (continued)										
			20	15B450	4,400	lf	17.00	74,800						
			21	15C450	1,700	lf	17.50	29,750						
			22	15B500	5,900	lf	18.00	106,200						
			23	15C500	1,400	lf	18.00	25,200						
			24	18A25	4,900	lf	15.00	73,500						
			25	18B25	24,000	lf	15.50	372,000						
			26	18C25	2,000	lf	16.00	32,000						
			27	18D25	1,100	lf	16.50	18,150						
			28	18B50	360	lf	16.00	5,760						
			29	18B75	1,000	lf	16.50	16,500						
			30	Allowance for unlisted items (10%)	Lump sum	ls	ls	244,905						
				Subtotal				2,600,000						
				Contingencies (20%)				500,000						
				Field Cost - 12.03.152				3,100,000						
		153		Waterway Structures							1,250,000			
			1	Excavation for structures	2,700	cy	3.00	8,100						
			2	Excavation for reservoir	4,500	cy	2.00	9,000						
			3	Excavation for outlet channel	3,300	cy	2.00	6,600						
			4	Backfill about structures	1,150	cy	2.00	2,300						
			5	Refill for reservoir	1,000	cy	1.00	1,000						
			6	Compacting backfill about structures	500	cy	5.00	2,500						
			7	Compacting refill for reservoir	1,000	cy	3.00	3,000						
			8	Compacting embankments	1,500	cy	1.00	1,500						
			9	Trimming reservoir for membrane lining	2,100	cy	2.00	4,200						
			10	Selected sand and gravel cover for reservoir lining	850	cy	15.00	12,750						
			11	Sand and gravel bedding under structures	150	cy	15.00	2,250						
			12	Sand and gravel bedding under riprap	500	cy	15.00	7,500						
			13	Riprap, 12-inch	1,050	cy	20.00	21,000						
			14	Pipe erected vertically, 18B25	60	lf	28.00	1,680						
			15	Concrete in structures	300	cy	200.00	60,000						
			16	Cement	85	tons	75.00	6,375						
			17	Reinforcement	29,000	lb	0.40	11,600						

7-1432 (5-72)
Bureau of Reclamation
Formerly Basic Estimate DC-1

INSTRUCTIONS FOR USE OF THIS FORM ARE CONTAINED IN CHAPTER 6, PART 152 OF THE RECLAMATION INSTRUCTIONS

BRINE PIPELINE

CONSTRUCTION COST ESTIMATE

Feasibility Estimate

OFFICE PREPARED BY: Office of Design and Construction, E&R Center

PROJECT: PARADOX VALLEY UNIT, CO, CRBSCP
Date of Estimate: February 3, 1977
Prices as of: October 1976

12.03.153

PROPERTY CLASS	IDENTIFIED PROPERTY	PLANT ACCOUNT	PAY ITEM	DESCRIPTION	QUANTITY	UNIT	LABOR AND MATERIALS BY CONTRACTOR Unit Price	LABOR AND MATERIALS BY CONTRACTOR Amount	LABOR AND MATERIALS BY GOVERNMENT Unit Price	LABOR AND MATERIALS BY GOVERNMENT Amount	FIELD COST Plant Account	TOTAL FIELD COST Identified Property	OTHER COSTS Identified Property	TOTAL COST Identified Property
		1		2	3		4		5		6	7	8	9
12	03			BRINE PIPELINE (continued)										
		153		Waterway Structures (continued)										
			18	Seven reinforced thermosetting resin (RTR) regulating tanks	Lump sum	ls	ls	800,000						
			19	Membrane lining for reservoir, 10 ML, PVC	2,100	sy	3.00	6,300						
			20	Roofing felt	1,100	sy	1.50	1,650						
			21	One RTR baffled pipe outlet	Lump sum	ls	ls	3,100						
			22	Allowance for unlisted items (10%)	Lump sum	ls	ls	77,595						
				Subtotal				1,050,000						
				Contingencies (20%)				200,000						
				Field Cost - 12.03.153				1,250,000						
				FACILITATING SERVICES									(160,000)	
				INVESTIGATIONS									(145,000)	
				DESIGN AND SPECIFICATIONS									(570,000)	
				CONSTRUCTION SUPERVISION									(446,000)	

7-1432 (5-72)
Bureau of Reclamation
Formerly Basic Estimate DC-1

INSTRUCTIONS FOR USE OF THIS FORM ARE CONTAINED IN CHAPTER 6, PART 152 OF THE RECLAMATION INSTRUCTIONS

BRINE PIPELINE PUMPING PLANTS

CONSTRUCTION COST ESTIMATE

Feasibility Estimate

OFFICE PREPARED BY: Office of Design and Construction, E&R Center

PROJECT: PARADOX VALLEY UNIT, CO, CRBSCP
Date of Estimate: February 3, 1977
Prices as of: October 1976

12.04.100, 130

PROPERTY CLASS	IDENTIFIED PROPERTY	PLANT ACCOUNT	PAY ITEM	DESCRIPTION	QUANTITY	UNIT	LABOR AND MATERIALS BY CONTRACTOR Unit Price	LABOR AND MATERIALS BY CONTRACTOR Amount	LABOR AND MATERIALS BY GOVERNMENT Unit Price	LABOR AND MATERIALS BY GOVERNMENT Amount	FIELD COST Plant Account	TOTAL FIELD COST Identified Property	OTHER COSTS Identified Property	TOTAL COST Identified Property
1				2	3		4		5		6	7	8	9
12	04			BRINE PIPELINE PUMPING PLANTS - 8 relift pumping plants located along the brine pipeline, 5 cfs capacity, total head - 366 ft. to 275 ft. (brine head)								3,629,500	1,070,500	4,700,000
		100		Land and Rights							1,000			
			1	Acquisition of private shrubland	2	ac	400.	800						
			2	Acquisition of public land	5	ac	0.	0						
			3	Allowance for unlisted items (10%)	Lump sum	ls	1s	80						
				Subtotal				880						
				Contingencies (15%)				120						
				Field Cost - 12.04.100				1,000						
		130		Structures and Improvements							1,890,000			
				(1) Pumping Plant No. 1										
			1	Excavation, common	2,400	cy	3.00	7,200						
			2	Backfill	2,100	cy	2.00	4,200						
			3	Compacting backfill	2,100	cy	5.00	10,500						
			4	Compacted embankment	300	cy	1.50	450						
			5	Concrete	330	cy	200.00	66,000						
			6	Cement	90	tons	70.00	6,300						
			7	Reinforcement	39,000	lb	0.40	15,600						
			8	Superstructure walls, precast concrete panels	2,600	sf	9.00	23,400						
			9	Roof, precast concrete double tees with IRMA type roofing	950	sf	13.00	12,350						
			10	Gypsum board over insulation for walls	2,300	sf	1.70	3,910						
			11	Miscellaneous metalwork	3,000	lb	2.00	6,000						
			12	Lighting system	Lump sum	ls	1s	20,000						
			13	Heating ventilating system and miscellaneous items	Lump sum	ls	1s	54,090						
				Subtotal				230,000						
				Contingencies (20%)				50,000						
				Field Cost - Pumping Plant No. 1				280,000						

7-1432 (5-72)
Bureau of Reclamation
Formerly Basic Estimate DC-1

INSTRUCTIONS FOR USE OF THIS FORM ARE CONTAINED IN CHAPTER 6, PART 152 OF THE RECLAMATION INSTRUCTIONS

BRINE PIPELINE PUMPING PLANTS

CONSTRUCTION COST ESTIMATE

Feasibility Estimate

OFFICE PREPARED BY: Office of Design and Construction, E&R Center

PROJECT: PARADOX VALLEY UNIT, CO, CRBSCP
Date of Estimate: February 3, 1977
Prices as of: October 1976

12.04.130

PROPERTY CLASS	IDENTIFIED PROPERTY	PLANT ACCOUNT	PAY ITEM	DESCRIPTION	QUANTITY	UNIT	LABOR AND MATERIALS BY CONTRACTOR Unit Price	LABOR AND MATERIALS BY CONTRACTOR Amount	LABOR AND MATERIALS BY GOVERNMENT Unit Price	LABOR AND MATERIALS BY GOVERNMENT Amount	FIELD COST Plant Account	TOTAL FIELD COST Identified Property	OTHER COSTS Identified Property	TOTAL COST Identified Property
1				2	3		4		5		6	7	8	9
12	04			BRINE PIPELINE PUMPING PLANTS (continued)										
		130		Structures and Improvements (continued)										
				(2) Pumping Plant No. 2										
			14	Excavation, common, above yard	260	cy	2.00	520						
			15	Excavation, common, structural	170	cy	3.00	510						
			16	Backfill	30	cy	2.00	60						
			17	Compacting backfill	30	cy	5.00	150						
			18	Compacted embankment	320	cy	1.50	480						
			19	Gravel surfacing, 4-inch, includes sterilization	1,400	sy	2.00	2,800						
			20	Chain link fence, 7-ft. includes gates	580	lf	12.00	6,960						
			21	Concrete	175	cy	200.00	35,000						
			22	Cement	50	tons	70.00	3,500						
			23	Reinforcement	17,500	lb	0.40	7,000						
			24	Superstructure walls, precast concrete panels	3,700	sf	9.00	33,300						
			25	Roof, precast concrete double tees with IRMA roofing	1,750	sf	13.00	22,750						
			26	Gypsum board over insulation for walls	3,200	sf	1.70	5,440						
			27	Miscellaneous metalwork	4,000	lb	2.00	8,000						
			28	Lighting system	Lump sum	ls	1s	17,000						
			29	Heating, ventilating system, and miscellaneous items	Lump sum	ls	1s	44,530						
			30	Access road, 12-ft. wide	1,000	lf	2.00	2,000						
				Subtotal				190,000						
				Contingencies (20%)				40,000						
				Field Cost - Pumping Plant No. 2				230,000						
				(3) Pumping Plant No. 3										
			31	Excavation, common, above yard	90	cy	2.00	180						
			32	Excavation, common, structural	170	cy	3.00	510						
			33	Backfill	30	cy	2.00	60						
			34	Compacting backfill	30	cy	5.00	150						
			35	Compacted embankment	410	cy	1.50	615						
			36	Gravel surfacing, 4-inch, includes sterilization	1,400	sy	2.00	2,800						
			37	Chain link fence, 7-ft. includes gates	580	lf	12.00	6,900						
			38	Concrete	175	cy	200.00	35,000						
			39	Cement	50	tons	70.00	3,500						
			40	Reinforcement	17,500	lb	0.40	7,000						
			41	Superstructure walls, precast concrete pamels	3,700	sf	9.00	33,300						

7-1432 (5-72)
Bureau of Reclamation
Formerly Basic Estimate DC-1

INSTRUCTIONS FOR USE OF THIS FORM ARE CONTAINED IN CHAPTER 6, PART 152 OF THE RECLAMATION INSTRUCTIONS

BRINE PIPELINE PUMPING PLANTS

CONSTRUCTION COST ESTIMATE

Feasibility Estimate

OFFICE PREPARED BY: Office of Design and Construction E&R Center

PROJECT PARADOX VALLEY UNIT, CO, CRBSCP
Date of Estimate February 3, 1977
Prices as of October 1976

12.04.130

PROPERTY CLASS	IDENTIFIED PROPERTY	PLANT ACCOUNT	PAY ITEM	DESCRIPTION	QUANTITY	UNIT	LABOR AND MATERIALS BY CONTRACTOR Unit Price	LABOR AND MATERIALS BY CONTRACTOR Amount	LABOR AND MATERIALS BY GOVERNMENT Unit Price	LABOR AND MATERIALS BY GOVERNMENT Amount	FIELD COST Plant Account	TOTAL FIELD COST Identified Property	OTHER COSTS Identified Property	TOTAL COST Identified Property
	1			2	3		4		5		6	7	8	9
12	04			BRINE PIPELINE PUMPING PLANTS (continued)										
		130		Structures and Improvements (continued)										
				(3) Pumping Plant No. 3 (continued)										
			42	Roof, precast concrete double tees with IRMA type roofing	1,750	sf	13.00	22,750						
			43	Gypsum board over insulation for walls	3,200	sf	1.70	5,440						
			44	Miscellaneous metalwork	4,000	lb	2.00	8,000						
			45	Lighting system	Lump sum	ls	1s	17,000						
			46	Heating, ventilating system, and miscellaneous items	Lump sum	ls	1s	41,495						
			47	Access road, 12-ft. wide	150	lf	2.00	300						
				Subtotal				185,000						
				Contingencies (20%)				35,000						
				Field Cost - Pumping Plant No. 3				220,000						
				(4) Pumping Plant No. 4										
			48	Excavation, common, above yard	350	cy	2.00	700						
			49	Excavation, common, structural	170	cy	3.00	510						
			50	Overexcavation	850	cy	3.00	2,550						
			51	Backfill	30	cy	2.00	60						
			52	Compacting backfill	30	cy	5.00	150						
			53	Compacted embankment	1,100	cy	1.50	1,650						
			54	Gravel surfacing, 4-inch with sterilization	1,400	sy	2.00	2,800						
			55	Fencing, 7-ft. chain link, includes gates	580	lf	12.00	6,960						
			56	Concrete	175	cy	200.00	35,000						
			57	Cement	50	tons	70.00	3,500						
			58	Reinforcement	17,500	lb	0.40	7,000						
			59	Superstructure walls, precast concrete panels	3,700	sf	9.00	33,300						
			60	Roof, precast concrete double tees with IRMA type roofing	1,750	sf	13.00	22,750						
			61	Gypsum board over insulation for walls	3,200	sf	1.70	5,440						
			62	Miscellaneous metalwork	4,000	lb	2.00	8,000						
			63	Lighting system	Lump sum	ls	1s	17,000						
			64	Heating, ventilating system, and miscellaneous items	Lump sum	ls	1s	42,330						
			65	Access road, 12-ft. wide	150	lf	2.00	300						
				Subtotal				190,000						
				Contingencies (20%)				40,000						
				Field Cost - Pumping Plant No. 4				230,000						

7-1432 (5-72)
Bureau of Reclamation
Formerly Basic Estimate DC-1

INSTRUCTIONS FOR USE OF THIS FORM ARE CONTAINED IN CHAPTER 6, PART 152 OF THE RECLAMATION INSTRUCTIONS

BRINE PIPELINE PUMPING PLANTS

CONSTRUCTION COST ESTIMATE

Feasibility Estimate

OFFICE PREPARED BY: Office of Design and Construction E&R Center

PROJECT PARADOX VALLEY UNIT, CO, CRBSCP
Date of Estimate February 3, 1977
Prices as of October 1976

12.04.130

PROPERTY CLASS	IDENTIFIED PROPERTY	PLANT ACCOUNT	PAY ITEM	DESCRIPTION	QUANTITY	UNIT	LABOR AND MATERIALS BY CONTRACTOR Unit Price	LABOR AND MATERIALS BY CONTRACTOR Amount	LABOR AND MATERIALS BY GOVERNMENT Unit Price	LABOR AND MATERIALS BY GOVERNMENT Amount	FIELD COST Plant Account	TOTAL FIELD COST Identified Property	OTHER COSTS Identified Property	TOTAL COST Identified Property
	1			2	3		4		5		6	7	8	9
12	04			BRINE PIPELINE PUMPING PLANTS (continued)										
		130		Structures and Improvements (continued)										
				(5) Pumping Plant No. 5										
			66	Excavation, common, above yard	960	cy	2.00	1,920						
			67	Excavation, common, structural	170	cy	3.00	510						
			68	Backfill	30	cy	2.00	60						
			69	Compacting backfill	30	cy	5.00	150						
			70	Compacted embankment	930	cy	1.50	1,395						
			71	Gravel surfacing, 4-inch with sterilization	1,200	sy	2.00	2,400						
			72	Fencing, 7- ft. chain link with gates	570	lf	12.00	6,840						
			73	Concrete	175	cy	200.00	35,000						
			74	Cement	50	tons	70.00	3,500						
			75	Reinforcement	17,500	lb	0.40	7,000						
			76	Superstructure walls, precast concrete panels	3,700	sf	9.00	33,300						
			77	Roof, precast concrete double tees with IRMA type roofing	1,750	sf	13.00	22,750						
			78	Gypsum board over insulation for walls	3,200	sf	1.70	5,440						
			79	Miscellaneous metalwork	4,000	lb	2.00	8,000						
			80	Lighting system	Lump sum	ls	1s	17,000						
			81	Heating, ventilating system and miscellaneous items	Lump sum	ls	1s	41,735						
			82	Access road, 12-ft. wide	1,500	lf	2.00	3,000						
				Subtotal				190,000						
				Contingencies (20%)				40,000						
				Field Cost - Pumping Plant No. 5				230,000						
				(6) Pumping Plant No. 6										
			83	Excavation, common, above yard	2,100	cy	2.00	4,200						
			84	Excavation, common, structural	170	cy	3.00	510						
			85	Overexcavation	730	cy	3.00	2,190						
			86	Backfill	30	cy	2.00	60						
			87	Compacting backfill	30	cy	5.00	150						
			88	Compacted embankment	2,500	cy	1.50	3,750						
			89	Gravel surfacing, 4-inch with sterilization	1,400	sy	2.00	2,800						
			90	Fencing 7-ft. chain link, includes gates	650	lf	12.00	7,800						
			91	Concrete	175	cy	200.00	35,000						
			92	Cement	50	ton	70.00	3,500						
			93	Reinforcement	17,500	lb	0.40	7,000						

7-1432 (5-72)
Bureau of Reclamation
Formerly Basic Estimate DC-1

INSTRUCTIONS FOR USE OF THIS FORM ARE CONTAINED IN CHAPTER 6, PART 152 OF THE RECLAMATION INSTRUCTIONS

BRINE PIPELINE PUMPING PLANTS

CONSTRUCTION COST ESTIMATE

Feasibility Estimate

OFFICE PREPARED BY: Office of Design and Construction, E&R Center

PROJECT PARADOX VALLEY UNIT, CO, CRBSCP
Date of Estimate February 3, 1977
Prices as of October 1976
12.04.130 Sheet 15 of 40

PROPERTY CLASS	IDENTIFIED PROPERTY	PLANT ACCOUNT	PAY ITEM	DESCRIPTION	QUANTITY	UNIT	LABOR AND MATERIALS BY CONTRACTOR Unit Price	LABOR AND MATERIALS BY CONTRACTOR Amount	LABOR AND MATERIALS BY GOVERNMENT Unit Price	LABOR AND MATERIALS BY GOVERNMENT Amount	FIELD COST Plant Account	TOTAL FIELD COST Identified Property	OTHER COSTS Identified Property	TOTAL COST Identified Property
1				2	3		4		5		6	7	8	9
12	04			BRINE PIPELINE PUMPING PLANTS (continued)										
		130		Structures and Improvements (continued)										
				(6) Pumping Plant No. 6 (continued)										
			94	Superstructure walls, precast concrete panels	3,700	sf	9.00	33,300						
			95	Roof, precast concrete double tees with IRMA type roofing	1,750	sf	13.00	22,750						
			96	Gypsum board over insulation board for walls	3,200	sf	1.70	5,440						
			97	Miscellaneous metalwork	4,000	lb	2.00	8,000						
			98	Lighting system	Lump sum	ls	ls	18,000						
			99	Heating, ventilating system, and miscellaneous items	Lump sum	ls	ls	45,150						
			100	Access road, 12-ft. wide	200	lf	2.00	400						
				Subtotal				200,000						
				Contingencies (20%)				40,000						
				Field Cost - Pumping Plant No. 6				240,000						
				(7) Pumping Plant No. 7										
			101	Excavation, common, above yard	880	cy	2.00	1,760						
			102	Excavation, common structural	170	cy	3.00	510						
			103	Backfill	30	cy	2.00	60						
			104	Compacting backfill	30	cy	5.00	150						
			105	Compacted embankment	650	cy	1.50	975						
			106	Gravel surfacing, 4-inch with sterilization	1,200	sy	2.00	2,400						
			107	Fencing, 7-ft. chain link with gates	570	lf	12.00	6,840						
			108	Concrete	175	cy	200.00	35,000						
			109	Cement	50	tons	70.00	3,500						
			110	Reinforcement	17,500	lb	0.40	7,000						
			111	Superstructure walls, precast concrete panels	3,700	sf	9.00	33,300						
			112	Roof, precast concrete double tees with IRMA type roofing	1,750	sf	13.00	22,750						
			113	Gypsum board over insulation for walls	3,200	sf	1.70	5,440						
			114	Miscellaneous metalwork	4,000	lb	2.00	8,000						
			115	Lighting system	Lump sum	ls	ls	17,000						
			116	Heating, ventilating system, and miscellaneous items	Lump sum	ls	ls	45,195						
			117	Access road, 12-ft. wide	60	lf	2.00	120						
				Subtotal				190,000						
				Contingencies (20%)				40,000						
				Field Cost - Pumping Plant No. 7				230,000						

7-1432 (5-72)
Bureau of Reclamation
Formerly Basic Estimate DC-1

INSTRUCTIONS FOR USE OF THIS FORM ARE CONTAINED IN CHAPTER 6, PART 152 OF THE RECLAMATION INSTRUCTIONS

BRINE PIPELINE PUMPING PLANTS

CONSTRUCTION COST ESTIMATE

Feasibility Estimate

OFFICE PREPARED BY: Office of Design and Construction, E&R Center

PROJECT PARADOX VALLEY UNIT, CO, CRBSCP
Date of Estimate February 3, 1977
Prices as of October 1976
12.04.130, 152 Sheet 16 of 40

PROPERTY CLASS	IDENTIFIED PROPERTY	PLANT ACCOUNT	PAY ITEM	DESCRIPTION	QUANTITY	UNIT	LABOR AND MATERIALS BY CONTRACTOR Unit Price	LABOR AND MATERIALS BY CONTRACTOR Amount	LABOR AND MATERIALS BY GOVERNMENT Unit Price	LABOR AND MATERIALS BY GOVERNMENT Amount	FIELD COST Plant Account	TOTAL FIELD COST Identified Property	OTHER COSTS Identified Property	TOTAL COST Identified Property
1				2	3		4		5		6	7	8	9
12	04			BRINE PIPELINE PUMPING PLANTS (continued)										
		130		Structures and Improvements (continued)										
				(8) Pumping Plant No. 8										
			118	Excavation, common, above yard	900	cy	2.00	1,800						
			119	Excavation, common, structural	170	cy	3.00	510						
			120	Overexcavation	630	cy	3.00	1,890						
			121	Backfill	30	cy	2.00	60						
			122	Compacting backfill	30	cy	5.00	150						
			123	Compacted embankment	1,700	cy	1.50	2,550						
			124	Gravel surfacing, 4-inch with sterilization	1,200	sy	2.00	2,400						
			125	Fencing, 7-ft. chain link with gates	570	lf	12.00	6,840						
			126	Concrete	175	cy	200.00	35,000						
			127	Cement	30	tons	70.00	3,500						
			128	Reinforcement	17,500	lb	0.40	7,000						
			129	Superstructure walls, precast concrete panels	3,700	sf	9.00	33,300						
			130	Roof, precast concrete double tees with IRMA type roofing	1,750	sf	13.00	22,750						
			131	Gypsum board over insulation for walls	3,200	sf	1.70	5,440						
			132	Miscellaneous metalwork	4,000	lb	2.00	8,000						
			133	Lighting system	Lump sum	ls	ls	17,000						
			134	Heating, ventilating system and miscellaneous items	Lump sum	ls	ls	41,170						
			135	Access road, 12-ft. wide	320	lf	2.00	640						
				Subtotal				190,000						
				Contingencies (20%)				40,000						
				Field Cost - Pumping Plant No. 8				230,000						
				Field Cost - 12.04.130				1,890,000						
		152		Waterways							815,000			
				(1) Pumping Plant No. 1										
			1	Trashracks	6,500	lb	1.25	8,125						
			2	Stoplogs	4,000	lb	2.00	8,000						
			3	Stoplog, seats and guides	1,600	lb	2.00	3,200						
			4	Stoplog cover	150	lb	2.00	300						
			5	Access hatch cover	200	lb	2.00	400						
			6	Ladders	350	lb	2.00	700						

7-1432 (5-72)
Bureau of Reclamation
Formerly Basic Estimate DC-1

INSTRUCTIONS FOR USE OF THIS FORM ARE CONTAINED IN CHAPTER 6, PART 152 OF THE RECLAMATION INSTRUCTIONS

BRINE PIPELINE PUMPING PLANTS

CONSTRUCTION COST ESTIMATE

Feasibility Estimate

OFFICE PREPARED BY: Office of Design and Construction, E&R Center

PROJECT PARADOX VALLEY UNIT, CO, CRBSCP
Date of Estimate February 3, 1977
Prices as of October 1976

12.04.152 Sheet 17 of 40

PROPERTY CLASS	IDENTIFIED PROPERTY	PLANT ACCOUNT	PAY ITEM	DESCRIPTION	QUANTITY	UNIT	LABOR AND MATERIALS BY CONTRACTOR Unit Price	LABOR AND MATERIALS BY CONTRACTOR Amount	LABOR AND MATERIALS BY GOVERNMENT Unit Price	LABOR AND MATERIALS BY GOVERNMENT Amount	FIELD COST Plant Account	TOTAL FIELD COST Identified Property	OTHER COSTS Identified Property	TOTAL COST Identified Property
	1			2	3		4		5		6	7	8	9
12	04			BRINE PIPELINE PUMPING PLANTS (continued)										
		152		Waterways (continued)										
				(1) Pumping Plant No. 1 (continued)										
			7	Valves, ball or cone	1,250	lb	8.00	10,000						
			8	Valve operating system	2,000	lb	2.50	5,000						
			9	Miscellaneous piping and valves	200	lb	3.00	600						
			10	Aluminum bronze air chamber, 620 cf	16,000	lb	3.50	56,000						
			11	Air compressor, 5 hp	600	lb	5.00	3,000						
			12	Excavation for air chamber foundation	20	cy	3.00	60						
			13	Compacted backfill	20	cy	5.00	100						
			14	Concrete for air chamber foundation	20	cy	270.00	5,400						
			15	Allowance for unlisted items	Lump sum	ls	ls	9,115						
				Subtotal				110,000						
				Contingencies (20%)				25,000						
				Field Cost - Pumping Plant No. 1				135,000						
				(2) Pumping Plant No. 2										
			16	Two 8-inch air operated pinch valves with controls and air tank	800	lb	6.00	4,800						
			17	Aluminum bronze pipe and manifold	6,200	lb	4.50	27,900						
			18	Aluminum bronze air chamber, 475 c.f.	10,000	lb	3.50	35,000						
			19	Air compressor, 5 hp	600	lb	5.00	3,000						
			20	Excavation for air chamber foundation	17	cy	3.00	51						
			21	Compacted backfill	4	cy	5.00	20						
			22	Concrete	17	cy	270.00	4,590						
			23	Valves, ball or cone	1,250	lb	8.00	10,000						
			24	Valve operating system	2,000	lb	2.50	5,000						
			25	Miscellaneous piping and valves	200	lb	3.00	600						
			26	Allowance for unlisted items	Lump sum	ls	ls	9,039						
				Subtotal				100,000						
				Contingencies (20%)				20,000						
				Field Cost - Pumping Plant No. 2				120,000						

7-1432 (5-72)
Bureau of Reclamation
Formerly Basic Estimate DC-1

INSTRUCTIONS FOR USE OF THIS FORM ARE CONTAINED IN CHAPTER 6, PART 152 OF THE RECLAMATION INSTRUCTIONS

BRINE PIPELINE PUMPING PLANTS

CONSTRUCTION COST ESTIMATE

Feasibility Estimate

OFFICE PREPARED BY: Office of Design and Construction, E&R Center

PROJECT PARADOX VALLEY UNIT, CO, CRBSCP
Date of Estimate February 3, 1977
Prices as of October 1976

12.04.152 Sheet 18 of 40

PROPERTY CLASS	IDENTIFIED PROPERTY	PLANT ACCOUNT	PAY ITEM	DESCRIPTION	QUANTITY	UNIT	LABOR AND MATERIALS BY CONTRACTOR Unit Price	LABOR AND MATERIALS BY CONTRACTOR Amount	LABOR AND MATERIALS BY GOVERNMENT Unit Price	LABOR AND MATERIALS BY GOVERNMENT Amount	FIELD COST Plant Account	TOTAL FIELD COST Identified Property	OTHER COSTS Identified Property	TOTAL COST Identified Property
	1			2	3		4		5		6	7	8	9
12	04			BRINE PIPELINE PUMPING PLANTS (continued)										
		152		Waterways (continued)										
				(3) Pumping Plant No. 3										
			27	Two 8-inch air operated pinch valves with controls and air tank	800	lb	6.00	4,800						
			28	Aluminum bronze pipe and manifold	6,200	lb	4.50	27,900						
			29	Aluminum bronze air chamber, 205 c.f.	8,000	lb	3.50	28,000						
			30	Air compressor, 2 hp	300	lb	5.00	1,500						
			31	Excavation for air chamber foundation	10	cy	3.00	30						
			32	Compacted backfill	3	cy	5.00	15						
			33	Concrete	10	cy	270.00	2,700						
			34	Valves, ball or cone	1,250	lb	8.00	10,000						
			35	Valve operating system	2,000	lb	2.50	5,000						
			36	Miscellaneous piping and valves	200	lb	3.00	600						
			37	Allowance for unlisted items	Lump sum	ls	ls	9,455						
				Subtotal				90,000						
				Contingencies (20%)				20,000						
				Field Cost - Pumping Plant No. 3				110,000						
				(4) Pumping Plant No. 4										
			38	Two 8-inch air operated pinch valves with controls and air tanks	800	lb	6.00	4,800						
			39	Aluminum bronze pipe and manifold	6,200	lb	4.50	27,900						
			40	Aluminum bronze air chamber	5,000	lb	3.50	17,500						
			41	Air compressor, 2 hp	300	lb	5.00	1,500						
			42	Excavation for air chamber foundation	7	cy	3.00	21						
			43	Compacted backfill	2	cy	5.00	10						
			44	Concrete	7	cy	270.00	1,890						
			45	Valves, ball or cone	1,250	lb	8.00	10,000						
			46	Valve operating system	2,000	lb	2.50	5,000						
			47	Miscellaneous piping and valves	200	lb	3.00	600						
			48	Allowance for rounding	Lump sum	ls	ls	5,779						
				Subtotal				75,000						
				Contingencies (20%)				15,000						
				Field Cost - Pumping Plant No. 4				90,000						

BRINE PIPELINE PUMPING PLANTS

CONSTRUCTION COST ESTIMATE

Feasibility Estimate

OFFICE PREPARED BY: Office of Design and Construction, E&R Center

PROJECT: PARADOX VALLEY UNIT, CO, CRBSCP
Date of Estimate: February 3, 1977
Prices as of: October 1976

12.04.152

Property Class	Identified Property	Plant Account	Pay Item	Description	Quantity	Unit	Labor and Materials by Contractor: Unit Price	Labor and Materials by Contractor: Amount	Labor and Materials by Government: Unit Price	Labor and Materials by Government: Amount	Field Cost: Plant Account	Total Field Cost: Identified Property	Other Costs: Identified Property	Total Cost: Identified Property
1				2	3		4		5		6	7	8	9
12	04			BRINE PIPELINE PUMPING PLANTS (continued)										
		152		Waterways (continued)										
				(5) Pumping Plant No. 5										
			49	Two 8-inch air operated pinch valves with controls and air tanks	800	lb	6.00	4,800						
			50	Aluminum bronze pipe and manifold	6,200	lb	4.50	27,900						
			51	Aluminum bronze air chamber, 145 cf	4,300	lb	3.50	15,050						
			52	Air compressor, 1 hp	200	lb	5.00	1,000						
			53	Excavation for air chamber foundation	7	cy	3.00	21						
			54	Compacted backfill	2	cy	5.00	10						
			55	Concrete	7	cy	270.00	1,890						
			56	Valves, ball or cone	1,250	lb	8.00	10,000						
			57	Valve operating system	2,000	lb	2.50	5,000						
			58	Miscellaneous piping and valves	200	lb	3.00	600						
			59	Allowance for unlisted items	Lump sum	ls	ls	8,729						
				Subtotal				75,000						
				Contingencies (20%)				15,000						
				Field Cost - Pumping Plant No. 5				90,000						
				(6) Pumping Plant No. 6										
			60	Two 8-inch air operated pinch valves with controls and air tanks	800	lb	6.00	4,800						
			61	Aluminum bronze pipe and manifold	6,200	lb	4.50	27,900						
			62	Aluminum bronze air chamber, 145 cf	4,300	lb	3.50	15,050						
			63	Air compressor, 1 hp	200	lb	5.00	1,000						
			64	Excavation for air chamber foundation	7	cy	3.00	21						
			65	Compacted backfill	2	cy	5.00	10						
			66	Concrete	7	cy	270.00	1,890						
			67	Valves, ball or cone	1,250	lb	8.00	10,000						
			68	Valve operating system	2,000	lb	2.50	5,000						
			69	Miscellaneous piping and valves	200	lb	3.00	600						
			70	Allowance for unlisted items	Lump sum	ls	ls	8,729						
				Subtotal				75,000						
				Contingencies (20%)				15,000						
				Field Cost - Pumping Plant No. 6				90,000						

7-1438 (5-72)
Bureau of Reclamation
Formerly Basic Estimate DC-1

INSTRUCTIONS FOR USE OF THIS FORM ARE CONTAINED IN CHAPTER 6, PART 152 OF THE RECLAMATION INSTRUCTIONS

BRINE PIPELINE PUMPING PLANTS

CONSTRUCTION COST ESTIMATE

Feasibility Estimate

OFFICE PREPARED BY: Office of Design and Construction, E&R Center

PROJECT: PARADOX VALLEY UNIT, CO, CRBSCP
Date of Estimate: February 3, 1977
Prices as of: October 1976

12.04.152

Property Class	Identified Property	Plant Account	Pay Item	Description	Quantity	Unit	Labor and Materials by Contractor: Unit Price	Labor and Materials by Contractor: Amount	Labor and Materials by Government: Unit Price	Labor and Materials by Government: Amount	Field Cost: Plant Account	Total Field Cost: Identified Property	Other Costs: Identified Property	Total Cost: Identified Property
1				2	3		4		5		6	7	8	9
12	04			BRINE PIPELINE PUMPING PLANTS (continued)										
		152		Waterways (continued)										
				(7) Pumping Plant No. 7										
			71	Two 8-inch air operated pinch valves with controls and air tanks	800	lb	6.00	4,800						
			72	Aluminum bronze pipe and manifold	6,200	lb	4.50	27,900						
			73	Aluminum bronze air chamber, 145 cf	4,300	lb	3.50	15,050						
			74	Air compressor, 1 hp	200	lb	5.00	1,000						
			75	Excavation for air chamber foundation	7	cy	3.00	21						
			76	Compacted backfill	2	cy	5.00	10						
			77	Concrete	7	cy	270.00	1,890						
			78	Valves, ball or cone	1,250	lb	8.00	10,000						
			79	Valve operating system	2,000	lb	2.50	5,000						
			80	Miscellaneous piping and valves	200	lb	3.00	600						
			81	Allowance for unlisted items	Lump sum	ls	ls	8,729						
				Subtotal				75,000						
				Contingencies (20%)				15,000						
				Field Cost - Pumping Plant No. 7				90,000						
				(8) Pumping Plant No. 8										
			82	Two 8-inch air operated pinch valves with controls air tanks	800	lb	6.00	4,800						
			83	Aluminum bronze pipe and manifold	6,200	lb	4.50	27,900						
			84	Aluminum bronze air chamber, 145 cf	4,300	lb	3.50	15,050						
			85	Air compressor, 1 hp	200	lb	5.00	1,000						
			86	Excavation for air chamber foundation	7	cy	3.00	21						
			87	Compacted backfill	2	cy	5.00	10						
			88	Concrete	7	cy	270.00	1,890						
			89	Valves, ball or cone	1,250	lb	8.00	10,000						
			90	Valve operating system	2,000	lb	2.50	5,000						
			91	Miscellaneous piping and valves	200	lb	3.00	600						
			92	Allowance for unlisted items	Lump sum	ls	ls	8,729						
				Subtotal				75,000						
				Contingencies (20%)				15,000						
				Field Cost - Pumping Plant No. 8				90,000						
				Field Cost - 12.04.152				815,000						

7-1432 (5-72)
Bureau of Reclamation
Formerly Basic Estimate DC-1

INSTRUCTIONS FOR USE OF THIS FORM ARE CONTAINED IN CHAPTER 6, PART 152 OF THE RECLAMATION INSTRUCTIONS

BRINE PIPELINE PUMPING PLANTS

CONSTRUCTION COST ESTIMATE

Feasibility Estimate

OFFICE PREPARED BY: Office of Design and Construction, E&R Center

PROJECT PARADOX VALLEY UNIT, CO. CRBSCP
Date of Estimate February 3, 1977
Prices as of October 1976

12.04.160

PROPERTY CLASS	IDENTIFIED PROPERTY	PLANT ACCOUNT	PAY ITEM	DESCRIPTION	QUANTITY	UNIT	LABOR AND MATERIALS BY CONTRACTOR Unit Price	LABOR AND MATERIALS BY CONTRACTOR Amount	LABOR AND MATERIALS BY GOVERNMENT Unit Price	LABOR AND MATERIALS BY GOVERNMENT Amount	FIELD COST Plant Account	TOTAL FIELD COST Identified Property	OTHER COSTS Identified Property	TOTAL COST Identified Property
		1		2	3		4		5		6	7	8	9
12	04			BRINE PIPELINE PUMPING PLANTS (continued)										
		160		Pumps and Prime Movers							604,000			
				(1) Pumping Plant No. 1										
			1	Vertical turbine type pumping units, 2 at 2.63 cfs plus 1 spare	7,800	lb	3.75	29,250						
			2	Electric motors for pumps, 2 plus 1 spare	8,400	lb	5.00	42,000						
			3	Allowance for rounding	Lump sum	ls	ls	4,000						
				Subtotal				70,000						
				Contingencies (20%)				14,000						
				Field Cost - Pumping Plant No. 1				84,000						
				(2) Pumping Plant No. 2										
			4	Horizontal centrifugal pumping units, 2 at 2.63 cfs plus 2 spares	7,600	lb	4.00	30,400						
			5	Electric motors, 2 plus 2 spares	15,500	lb	5.00	77,500						
			6	Allowance for rounding	Lump sum	ls	ls	2,100						
				Subtotal				110,000						
				Contingencies (20%)				20,000						
				Field Cost - Pumping Plant No. 2				130,000						
				(3) Pumping Plant No. 3										
			7	Horizontal centrifugal pumping units, 2 at 2.63 cfs	3,800	lb	4.00	15,200						
			8	Electric motors	7,700	lb	5.00	38,500						
			9	Allowance for rounding	Lump sum	ls	ls	300						
				Subtotal				54,000						
				Contingencies (20%)				11,000						
				Field Cost - Pumping Plant No. 3				65,000						

7-1432 (5-72)
Bureau of Reclamation
Formerly Basic Estimate DC-1

INSTRUCTIONS FOR USE OF THIS FORM ARE CONTAINED IN CHAPTER 6, PART 152 OF THE RECLAMATION INSTRUCTIONS

BRINE PIPELINE PUMPING PLANTS

CONSTRUCTION COST ESTIMATE

Feasibility Estimate

OFFICE PREPARED BY: Office of Design and Construction, E&R Center

PROJECT PARADOX VALLEY UNIT, CO. CRBSCP
Date of Estimate February 3, 1977
Prices as of October 1976

12.04.160

PROPERTY CLASS	IDENTIFIED PROPERTY	PLANT ACCOUNT	PAY ITEM	DESCRIPTION	QUANTITY	UNIT	LABOR AND MATERIALS BY CONTRACTOR Unit Price	LABOR AND MATERIALS BY CONTRACTOR Amount	LABOR AND MATERIALS BY GOVERNMENT Unit Price	LABOR AND MATERIALS BY GOVERNMENT Amount	FIELD COST Plant Account	TOTAL FIELD COST Identified Property	OTHER COSTS Identified Property	TOTAL COST Identified Property
		1		2	3		4		5		6	7	8	9
12	04			BRINE PIPELINE PUMPING PLANTS (continued)										
		160		Pumps and Prime Movers (continued)										
				(4) Pumping Plant No. 4										
			10	Horizontal centrifugal pumping units, 2 at 2.63 cfs	3,800	lb	4.00	15,200						
			11	Electric motors	7,700	lb	5.00	38,500						
			12	Allowance for rounding	Lump sum	ls	ls	300						
				Subtotal				54,000						
				Contingencies (20%)				11,000						
				Field Cost - Pumping Plant No. 4				65,000						
				(5) Pumping Plant No. 5										
			13	Horizontal centrifugal pumping units, 2 at 2.63 cfs	3,800	lb	4.00	15,200						
			14	Electric motors	7,700	lb	5.00	38,500						
			15	Allowance for rounding	Lump sum	ls	ls	300						
				Subtotal				54,000						
				Contingencies (20%)				11,000						
				Field Cost - Pumping Plant No. 5				65,000						
				(6) Pumping Plant No. 6										
			16	Horizontal centrifugal pumping units, 2 at 2.63 cfs	3,800	lb	4.00	15,200						
			17	Electric motors	7,700	lb	5.00	38,500						
			18	Allowance for rounding	Lump sum	ls	ls	300						
				Subtotal				54,000						
				Contingencies (20%)				11,000						
				Field Cost - Pumping Plant No. 6				65,000						

BRINE PIPELINE PUMPING PLANTS

CONSTRUCTION COST ESTIMATE

Feasibility Estimate

OFFICE PREPARED BY: Office of Design and Construction, E&R Center

PROJECT PARADOX VALLEY UNIT, CO, CRBSCP
Date of Estimate February 3, 1977
Prices as of October 1976

12.04.160, 170 Sheet 23 of 40

PROPERTY CLASS	IDENTIFIED PROPERTY	PLANT ACCOUNT	PAY ITEM	DESCRIPTION	QUANTITY	UNIT	LABOR AND MATERIALS BY CONTRACTOR Unit Price	LABOR AND MATERIALS BY CONTRACTOR Amount	LABOR AND MATERIALS BY GOVERNMENT Unit Price	LABOR AND MATERIALS BY GOVERNMENT Amount	FIELD COST Plant Account	TOTAL FIELD COST Identified Property	OTHER COSTS Identified Property	TOTAL COST Identified Property
1				2	3		4		5		6	7	8	9
12	04			BRINE PIPELINE PUMPING PLANTS (continued)										
		160		Pumps and Prime Movers (continued)										
				(7) Pumping Plant No. 7										
			19	Horizontal centrifugal pumping units, 2 at 2.63 cfs	3,800	lb	4.00	15,200						
			20	Electric motors	7,700	lb	5.00	38,500						
			21	Allowance for rounding	Lump sum	ls	ls	300						
				Subtotal				54,000						
				Contingencies (20%)				11,000						
				Field Cost - Pumping Plant No. 7				65,000						
				(8) Pumping Plant No. 8										
			22	Horizontal centrifugal pumping units, 2 at 2.63 cfs	3,800	lb	4.00	15,200						
			23	Electric motors	7,700	lb	5.00	38,500						
			24	Allowance for rounding	Lump sum	ls	ls	300						
				Subtotal				54,000						
				Contingencies (20%)				11,000						
				Field Cost - Pumping Plant No. 8				65,000						
				Field Cost - 12.04.160				604,000						
		170		Accessory Electrical Equipment							220,000			
			1	Electrical equipment for Pumping Plant No. 1 (curve estimate)	1	ea	31,000	31,000						
			2	Electrical equipment for Pumping Plants No. 2 through No. 8 (curve estimate)	7	ea	27,000	189,000						
				Field Cost - 12.04.170				220,000						

7-1432 (5-72)
Bureau of Reclamation
Formerly Basic Estimate 1 C-3

INSTRUCTIONS FOR USE OF THIS FORM ARE CONTAINED IN CHAPTER 6, PART 152 OF THE RECLAMATION INSTRUCTIONS

BRINE PIPELINE PUMPING PLANTS

CONSTRUCTION COST ESTIMATE

Feasibility Estimate

OFFICE PREPARED BY: Office of Design and Construction, E&R Center

PROJECT PARADOX VALLEY UNIT, CO, CRBSCP
Date of Estimate February 3, 1977
Prices as of October 1976

12.04.199 Sheet 24 of 40

PROPERTY CLASS	IDENTIFIED PROPERTY	PLANT ACCOUNT	PAY ITEM	DESCRIPTION	QUANTITY	UNIT	LABOR AND MATERIALS BY CONTRACTOR Unit Price	LABOR AND MATERIALS BY CONTRACTOR Amount	LABOR AND MATERIALS BY GOVERNMENT Unit Price	LABOR AND MATERIALS BY GOVERNMENT Amount	FIELD COST Plant Account	TOTAL FIELD COST Identified Property	OTHER COSTS Identified Property	TOTAL COST Identified Property
1				2	3		4		5		6	7	8	9
12	04			BRINE PIPELINE PUMPING PLANTS (continued)										
		199		Miscellaneous Installed Equipment							99,500			
				(1) Pumping Plant No. 1										
			1	Bridge crane, 1-1/2 ton capacity	2,400	lb	4.00	9,600						
			2	Allowance for rounding	Lump sum	ls	ls	400						
				Subtotal				10,000						
				Contingencies (20%)				2,000						
				Field Cost - Pumping Plant No. 1				12,000						
				(2) Pumping Plant No. 2										
			3	Bridge crane, 1-ton capacity	2,600	lb	4.00	10,400						
			4	Allowance for rounding	Lump sum	ls	ls	100						
				Subtotal				10,500						
				Contingencies (20%)				2,000						
				Field Cost - Pumping Plant No. 2				12,500						
				(3) Pumping Plant No. 3										
			5	Bridge crane, 1-ton capacity	2,600	lb	4.00	10,400						
			6	Allowance for rounding	Lump sum	ls	ls	100						
				Subtotal				10,500						
				Contingencies (20%)				2,000						
				Field Cost - Pumping Plant No. 3				12,500						
				(4) Pumping Plant No. 4										
			7	Bridge crane, 1-ton capacity	2,600	lb	4.00	10,400						
			8	Allowance for rounding	Lump sum	ls	ls	100						
				Subtotal				10,500						
				Contingencies (20%)				2,000						
				Field Cost - Pumping Plant No. 4				12,500						

7-1432 (5-72)
Bureau of Reclamation
Formerly Basic Estimate DC-1

INSTRUCTIONS FOR USE OF THIS FORM ARE CONTAINED IN CHAPTER 6, PART 152 OF THE RECLAMATION INSTRUCTIONS

BRINE PIPELINE PUMPING PLANTS

CONSTRUCTION COST ESTIMATE

Feasibility Estimate

OFFICE PREPARED BY: Office of Design and Construction. E&R Center

PROJECT: PARADOX VALLEY UNIT, CO, CRBSCP
Date of Estimate: February 3, 1977
Prices as of: October 1976

12.04.199

Sheet 25 of 40

PROPERTY CLASS	IDENTIFIED PROPERTY	PLANT ACCOUNT	PAY ITEM	DESCRIPTION	QUANTITY	UNIT	LABOR AND MATERIALS BY CONTRACTOR Unit Price	LABOR AND MATERIALS BY CONTRACTOR Amount	LABOR AND MATERIALS BY GOVERNMENT Unit Price	LABOR AND MATERIALS BY GOVERNMENT Amount	FIELD COST Plant Account	TOTAL FIELD COST Identified Property	OTHER COSTS Identified Property	TOTAL COST Identified Property
1				2	3		4		5		6	7	8	9
12	04			BRINE PIPELINE PUMPING PLANTS (continued)										
		199		Miscellaneous Installed Equipment (continued)										
				(5) Pumping Plant No. 5										
			9	Bridge crane, 1-ton capacity	2,600	lb	4.00	10,400						
			10	Allowance for rounding	Lump sum	ls	ls	100						
				Subtotal				10,500						
				Contingencies (20%)				2,000						
				Field Cost - Pumping Plant No. 5				12,500						
				(6) Pumping Plant No. 6										
			11	Bridge crane, 1-ton capacity	2,600	lb	4.00	10,400						
			12	Allowance for rounding	Lump sum	ls	ls	100						
				Subtotal				10,500						
				Contingencies (20%)				2,000						
				Field Cost - Pumping Plant No. 6				12,500						
				(7) Pumping Plant No. 7										
			13	Bridge crane, 1-ton capacity	2,600	lb	4.00	10,400						
			14	Allowance for rounding	Lump sum	ls	ls	100						
				Subtotal				10,500						
				Contingencies (20%)				2,000						
				Field Cost - Pumping Plant No. 7				12,500						

7-1432 (5-72)
Bureau of Reclamation
Formerly Basic Estimate DC-1

INSTRUCTIONS FOR USE OF THIS FORM ARE CONTAINED IN CHAPTER 6, PART 152 OF THE RECLAMATION INSTRUCTIONS

BRINE PIPELINE PUMPING PLANTS

CONSTRUCTION COST ESTIMATE

Feasibility Estimate

OFFICE PREPARED BY: Office of Design and Construction E&R Center

PROJECT: PARADOX VALLEY UNIT, CO, CRBSCP
Date of Estimate: February 3, 1977
Prices as of: October 1976

12.04.199

Sheet 26 of 40

PROPERTY CLASS	IDENTIFIED PROPERTY	PLANT ACCOUNT	PAY ITEM	DESCRIPTION	QUANTITY	UNIT	LABOR AND MATERIALS BY CONTRACTOR Unit Price	LABOR AND MATERIALS BY CONTRACTOR Amount	LABOR AND MATERIALS BY GOVERNMENT Unit Price	LABOR AND MATERIALS BY GOVERNMENT Amount	FIELD COST Plant Account	TOTAL FIELD COST Identified Property	OTHER COSTS Identified Property	TOTAL COST Identified Property
1				2	3		4		5		6	7	8	9
12	04			BRINE PIPELINE PUMPING PLANTS (continued)										
		199		Miscellaneous Installed Equipment (continued)										
				(8) Pumping Plant No. 8										
			1	Bridge crane, 1-ton capacity	2,600	lb	4.00	10,400						
			2	Allowance for rounding	Lump sum	ls	ls	100						
				Subtotal				10,500						
				Contingencies (20%)				2,000						
				Field Cost - Pumping Plant No. 8				12,500						
				Field Cost - 12.04.199				99,500						
				FACILITATING SERVICES									(130,000)	
				INVESTIGATIONS									(120,000)	
				DESIGN AND SPECIFICATIONS									(580,000)	
				CONSTRUCTION SUPERVISION									(240,500)	

7-1432 (5-72)
Bureau of Reclamation
Formerly Basic Estimate DC-1

INSTRUCTIONS FOR USE OF THIS FORM ARE CONTAINED IN CHAPTER 6, PART 152 OF THE RECLAMATION INSTRUCTIONS

RADIUM DAM, DIKE, AND EVAPORATION POND

CONSTRUCTION COST ESTIMATE

Feasibility Estimate

OFFICE PREPARED BY: Western Colorado Projects Office, Durango, Colorado

PROJECT PARADOX VALLEY UNIT, CO, CRBSCP
Date of Estimate February 3, 1977
Prices as of October 1976

12.05,100,110,120 Sheet 27 of 40

PROPERTY CLASS	IDENTIFIED PROPERTY	PLANT ACCOUNT	PAY ITEM	DESCRIPTION	QUANTITY	UNIT	LABOR AND MATERIALS BY CONTRACTOR Unit Price	LABOR AND MATERIALS BY CONTRACTOR Amount	LABOR AND MATERIALS BY GOVERNMENT Unit Price	LABOR AND MATERIALS BY GOVERNMENT Amount	FIELD COST Plant Account	TOTAL FIELD COST Identified Property	OTHER COSTS Identified Property	TOTAL COST Identified Property
1				2	3		4		5		6	7	8	9
12	05			RADIUM DAM, DIKE, AND EVAPORATION POND - Earthfill structures, crest lengths - 8,300 and 7,500 ft., heights - 87 and 56 ft., total capacity - 86,800 AF, surface area - 3,754 ac., located on Dry Creek in San Miguel County, Colorado, 5 miles west of Colorado State Highway 141 and 3 miles south of Montrose County Line								26,225,000	4,775,000	31,000,000
		100		Land and Rights							1,150,000			
			1	Uneconomical Unit	830	ac	200.	166,000						
			2	Acquisition of private shrubland	3,700	ac	200.	740,000						
			3	Acquisition of public land	1,250	ac	0	0						
			4	Allowance for unlisted items (10%)	Lump sum	ls	1s	94,000						
				Subtotal				1,000,000						-
				Contingencies (15%)				150,000						
				Field Cost - 12.05.100				1,150,000						
		110		Relocation of Property of Others							180,000			
			1	San Miguel County road relocation	4.2	mi	32,000	134,000						
			2	Allowance for unlisted items (10%)	Lump sum	ls	1s	13,600						
				Subtotal				148,000						
				Contingencies (20%)				32,000						
				Field Cost - 12.05.110				180,000						
		120		Clearing Land							260,000			
			1	Reservoir clearing	650	ac	300.	195,000						
			2	Allowance for unlisted items (10%)	Lump sum	ls	1s	20,000						
				Subtotal				215,000						
				Contingencies (20%)				45,000						
				Field Cost 12.05.120				260,000						

7-1432 (5-72)
Bureau of Reclamation
Formerly Basic Estimate DC-1

INSTRUCTIONS FOR USE OF THIS FORM ARE CONTAINED IN CHAPTER 6, PART 152 OF THE RECLAMATION INSTRUCTIONS

RADIUM DAM, DIKE, AND EVAPORATION POND

CONSTRUCTION COST ESTIMATE

Feasibility Estimate

OFFICE PREPARED BY: Office of Design and Construction, E&R Center

PROJECT PARADOX VALLEY UNIT, CO, CRBSCP
Date of Estimate February 3, 1977
Prices as of October 1976

12.05.140, 151 Sheet 28 of 40

PROPERTY CLASS	IDENTIFIED PROPERTY	PLANT ACCOUNT	PAY ITEM	DESCRIPTION	QUANTITY	UNIT	LABOR AND MATERIALS BY CONTRACTOR Unit Price	LABOR AND MATERIALS BY CONTRACTOR Amount	LABOR AND MATERIALS BY GOVERNMENT Unit Price	LABOR AND MATERIALS BY GOVERNMENT Amount	FIELD COST Plant Account	TOTAL FIELD COST Identified Property	OTHER COSTS Identified Property	TOTAL COST Identified Property
1				2	3		4		5		6	7	8	9
12	05			RADIUM DAM, DIKE AND EVAPORATION POND (continued)										
		140		Roads and Road Structures							35,000			
			1	Constructing O&M access roads	1.3	mi	20,000	26,000						
			2	Allowance for unlisted items (10%)	Lump sum	ls	1s	3,000						
				Subtotal				29,000						
				Contingencies (20%)				6,000						
				Field Cost - 12.05.140				35,000						
		151		Dams							24,600,000			
				(1) Dam and Dike Structure										
			1	Diversion and care of creek during construction and unwatering foundation	Lump sum	ls	1s	300,000						
			2	Excavation, common, dam and dike foundation	490,000	cy	1.80	882,000						
			3	Excavation, stripping borrow area	110,000	cy	0.60	66,000						
			4	Excavation, rock, grout cap	4,300	cy	50.00	215,000						
			5	Excavation, earthfill in borrow area, and transportation to dam embankment	2,200,000	cy	1.33	2,926,000						
			6	Earthfill in embankment	2,200,000	cy	0.43	946,000						
			7	Sand and gravel drain	65,000	cy	10.00	650,000						
			8	Downstream sand and gravel slope protection	40,000	cy	6.00	240,000						
			9	Riprap on embankments (dam and dike)	120,000	cy	18.00	2,160,000						
			10	Bedding for riprap	59,000	cy	8.00	472,000						
			11	Excavation, stripping, for shale blanket in reservoir	510,000	cy	0.60	306,000						
			12	Excavation, blanket material, in borrow area and transportation to blanket area	5,200,000	cy	1.17	6,084,000						
			13	Placing upstream shale blanket	5,200,000	cy	0.35	1,820,000						
			14	Gravel surfacing on crest of dam and dike and on connecting access road between dam and dike	12,500	cy	4.00	50,000						
			15	Guide posts on crest of dam and dike	630	ea	15.00	9,450						
				Furnishing and constructing sewer pipe toe drains in the following sizes:										
			16	8-inch diameter	7,800	lf	12.00	93,600						
			17	12-inch diameter	5,100	lf	16.00	81,600						
			18	Mobilization and demobilization for grouting dam and dike foundations	Lump sum	ls	1s	35,000						

7-1482 (5-72)
Bureau of Reclamation
Formerly Basic Estimate DC-1

INSTRUCTIONS FOR USE OF THIS FORM ARE CONTAINED IN CHAPTER 6, PART 152 OF THE RECLAMATION INSTRUCTIONS

RADIUM DAM, DIKE, AND EVAPORATION POND

CONSTRUCTION COST ESTIMATE

Feasibility Estimate

OFFICE PREPARED BY: Office of Design and Construction E&R Center

PROJECT PARADOX VALLEY UNIT, CO, CRBSCP
Date of Estimate February 3, 1977
Prices as of October 1976

12.05.151

PROPERTY CLASS	IDENTIFIED PROPERTY	PLANT ACCOUNT	PAY ITEM	DESCRIPTION	QUANTITY	UNIT	LABOR AND MATERIALS BY CONTRACTOR Unit Price	LABOR AND MATERIALS BY CONTRACTOR Amount	LABOR AND MATERIALS BY GOVERNMENT Unit Price	LABOR AND MATERIALS BY GOVERNMENT Amount	FIELD COST Plant Account	TOTAL FIELD COST Identified Property	OTHER COSTS Identified Property	TOTAL COST Identified Property
1				2	3		4		5		6	7	8	9
12	05			RADIUM DAM, DIKE, AND EVAPORATION POND (continued)										
		151		Dams (continued)										
				Drilling and grouting holes in the following stages:										
			19	0 to 30 ft.	23,000	lf	4.50	103,500						
			20	30 to 60 ft.	12,000	lf	4.75	57,000						
			21	Grout pipe and fittings	17,000	lb	2.00	34,000						
			22	Hookups to grout holes	1,200	ea	30.00	36,000						
			23	Pressure grouting	35,000	cf	5.00	175,000						
			24	Concrete in grout cap	4,300	cy	60.00	258,000						
			25	Cement for grout cap	24,000	cwt	3.30	79,200						
			26	Cement for pressure grouting	35,000	sk	3.60	126,000						
			27	Allowance for unlisted items (10%)	Lump sum	ls	ls	1,794,650						
				Subtotal				20,000,000						
				Contingencies (20%)				4,000,000						
				Field Cost - Dam and Dike Structure				24,000,000						
				(2) Combined Spillway and Outlet Works, 6-foot diameter conduit, maximum capacity - 800 cfs at water surface elevation 6338										
			28	Excavation, open cut, all classes	31,000	cy	3.00	93,000						
			29	Special compaction of dam embankment	2,300	cy	5.00	11,500						
			30	Pervious backfill	750	cy	4.00	3,000						
			31	Bedding for riprap	530	cy	8.00	4,240						
			32	Riprap	1,050	cy	18.00	18,900						
			33	Drilling holes for anchor bars and grout in place	360	lf	5.50	1,980						
			34	Sewer pipe drains, 6-inch	280	lf	9.00	2,520						
			35	Rubber waterstop	830	lf	4.50	3,735						
			36	Chain link fence, 96-inch	220	lf	12.00	2,640						
			37	Reinforcement	180,000	lb	0.40	72,000						
			38	Cement	340	ton	66.00	22,440						
			39	Concrete in intake structure	55	cy	180.00	9,900						
			40	Concrete in conduit and collars	570	cy	120.00	68,400						
			41	Concrete in gate structure	240	cy	160.00	38,400						
			42	Concrete in chute and stilling basin	340	cy	120.00	40,800						
			43	Two 48" x 60" slide gates - Head = 64.8'	14,500	lb	2.80	40,600						
			44	Two manually operated lifts for slide gates	1,800	lb	4.50	8,100						
			45	Two 2' x 5' access covers	350	lb	2.30	805						

RADIUM DAM, DIKE, AND EVAPORATION POND

CONSTRUCTION COST ESTIMATE

Feasibility Estimate

OFFICE PREPARED BY: Office of Design and Construction E&R Center

PROJECT PARADOX VALLEY UNIT, CO, CRBSCP
Date of Estimate February 3, 1977
Prices as of October 1976

12.05.151

PROPERTY CLASS	IDENTIFIED PROPERTY	PLANT ACCOUNT	PAY ITEM	DESCRIPTION	QUANTITY	UNIT	LABOR AND MATERIALS BY CONTRACTOR Unit Price	LABOR AND MATERIALS BY CONTRACTOR Amount	LABOR AND MATERIALS BY GOVERNMENT Unit Price	LABOR AND MATERIALS BY GOVERNMENT Amount	FIELD COST Plant Account	TOTAL FIELD COST Identified Property	OTHER COSTS Identified Property	TOTAL COST Identified Property
1				2	3		4		5		6	7	8	9
12	04			RADIUM DAM, DIKE, AND EVAPORATION POND (continued)										
		151		Dams (continued)										
				(2) Combined Spillway and Outlet Works (continued)										
			46	Two 2' x 5' access gratings	200	lb	2.30	460						
			47	One trash-safety rack 6' x 8'	1,700	lb	1.80	3,060						
			48	Reservoir level gage piping	1,600	lb	5.00	8,000						
			49	Instruments (surface detector and recorder)	160	lb	5.00	800						
			50	Allowance for unlisted items (10%)	Lump sum	ls	ls	44,720						
				Subtotal				500,000						
				Contingencies (20%)				100,000						
				Field Cost - Combined Spillway and Outlet Works				600,000						
				Field Cost - 12.05.151				24,600,000						
				FACILITATING SERVICES									(980,000)	
				INVESTIGATIONS									(900,000)	
				DESIGN AND SPECIFICATIONS									(1,800,000)	
				CONSTRUCTION SUPERVISION									(1,095,000)	

TRANSMISSION LINES AND SUBSTATIONS

CONSTRUCTION COST ESTIMATE

Feasibility Estimate

OFFICE PREPARED BY: Office of Design and Construction, E&R Center

PROJECT: PARADOX VALLEY UNIT, CO, CRBSCP
Date of Estimate: February 3, 1977
Prices as of: October 1976

13.01.175,184 — Sheet 31 of 40

Property Class	Identified Property	Plant Account	Pay Item	Description	Quantity	Unit	Labor and Materials by Contractor: Unit Price	Labor and Materials by Contractor: Amount	Labor and Materials by Government: Unit Price	Labor and Materials by Government: Amount	Field Cost: Plant Account	Total Field Cost: Identified Property	Other Costs: Identified Property	Total Cost: Identified Property
1				2	3		4		5		6	7	8	9
13				TRANSMISSION LINES, SWITCHYARDS, AND SUBSTATIONS										
	01			TRANSMISSION LINES AND SUBSTATIONS - Short underground transmission lines which bring in power to the substations of the eight relift pumping plants from an existing 46 KV powerline which parallels the proposed brine pipeline.								446,000	134,000	580,000
		175		Station Equipment							420,000			
			1	Substations for relift pumping plants	Lump sum	ls	ls	320,000						
			2	Allowance for unlisted items (10%)	Lump sum	ls	ls	30,000						
				Subtotal				350,000						
				Contingencies (20%)				70,000						
				Field Cost - 13.01.175				420,000						
		184		Underground Conductors and Devices							26,000			
			1	Underground transmission lines	1	mi	20,000	20,000						
			2	Allowance for unlisted items (10%)	Lump sum	ls	ls	2,000						
				Subtotal				22,000						
				Contingencies (20%)				4,000						
				Field Cost - 13.01.184				26,000						
				FACILITATING SERVICES									(16,000)	
				INVESTIGATIONS									(15,000)	
				DESIGN AND SPECIFICATIONS									(66,000)	
				CONSTRUCTION SUPERVISION									(37,000)	

7-1136 (5-72)
Bureau of Reclamation
Formerly Basic Estimate DC-1

INSTRUCTIONS FOR USE OF THIS FORM ARE CONTAINED IN CHAPTER 6, PART 82 OF THE RECLAMATION INSTRUCTIONS

PERMANENT OPERATING FACILITIES

CONSTRUCTION COST ESTIMATE

Feasibility Estimate

OFFICE PREPARED BY: Western Colorado Projects Office, Durango, Colorado

PROJECT: PARADOX VALLEY UNIT, CO, CRBSCP
Date of Estimate: May 23, 1977
Prices as of: October 1976

15.01.130 — Sheet 32 of 40

Property Class	Identified Property	Plant Account	Pay Item	Description	Quantity	Unit	Labor and Materials by Contractor: Unit Price	Labor and Materials by Contractor: Amount	Labor and Materials by Government: Unit Price	Labor and Materials by Government: Amount	Field Cost: Plant Account	Total Field Cost: Identified Property	Other Costs: Identified Property	Total Cost: Identified Property
1				2	3		4		5		6	7	8	9
15				GENERAL PROPERTY										
	01			PERMANENT OPERATING FACILITIES - Equipment shed, storage and shop buildings located within the H_2S Plant and Pumping Plant No. 1 yard.								130,000	40,000	170,000
		130		Structures and Improvements							130,000			
			1	Equipment shed, storage and shop buildings	Lump sum	ls	ls	100,000						
			2	Allowance for unlisted items (10%)	Lump sum	ls	ls	10,000						
				Subtotal				110,000						
				Contingencies (20%)				20,000						
				Field Cost - 15.01.130				130,000						
				FACILITATING SERVICES									(5,000)	
				INVESTIGATIONS									(5,000)	
				DESIGN AND SPECIFICATIONS									(25,000)	
				CONSTRUCTION SUPERVISION									(5,000)	

7-1482 (5-72)
Bureau of Reclamation
Formerly Basic Estimate DC-1

INSTRUCTIONS FOR USE OF THIS FORM ARE CONTAINED IN CHAPTER 6, PART 152 OF THE RECLAMATION INSTRUCTIONS

O&M HOUSING

CONSTRUCTION COST ESTIMATE

Feasibility Estimate

OFFICE PREPARED BY: Western Colorado Projects Office, Durango, Colorado

PROJECT PARADOX VALLEY UNIT, CO, CRBSCP
Date of Estimate May 23, 1977
Prices as of October 1976

15.02.100, 130, 140 Sheet 33 of 40

PROPERTY CLASS	IDENTIFIED PROPERTY	PLANT ACCOUNT	PAY ITEM	DESCRIPTION	QUANTITY	UNIT	LABOR AND MATERIALS BY CONTRACTOR Unit Price	LABOR AND MATERIALS BY CONTRACTOR Amount	LABOR AND MATERIALS BY GOVERNMENT Unit Price	LABOR AND MATERIALS BY GOVERNMENT Amount	FIELD COST Plant Account	TOTAL FIELD COST Identified Property	OTHER COSTS Identified Property	TOTAL COST Identified Property
1				2	3		4		5		6	7	8	9
15	02			O&M HOUSING - Four 3-bedroom residences to be located 300 ft. south of permanent operating facilities								297,000	93,000	390,000
		100		Land and Rights							2,000			
			1	Acquisition of private shrubland	4	ac	400.	1,600						
			2	Allowance for unlisted items (10%)	Lump sum	ls	1s	150						
				Subtotal				1,750						
				Contingencies (15%)				250						
				Field Cost - 15.02.100				2,000						
		130		Structures and Improvements							225,000			
			1	3-bedroom residence	4	ea	38,000	152,000						
			2	Facilities for permanent utilities	Lump sum	ls	1s	17,125						
			3	Allowance for unlisted items (10%)	Lump sum	ls	1s	16,875						
				Subtotal				186,000						
				Contingencies (20%)				39,000						
				Field Cost - 15.02.130				225,000						
		140		Roads and Road Structures							70,000			
			1	Constructing frontage road	Lump sum	ls	1s	12,500						
			2	Paving existing county road	2,000	lf	20.00	40,000						
			3	Allowance for unlisted items (10%)	Lump sum	ls	1s	5,500						
				Subtotal				58,000						
				Contingencies (20%)				12,000						
				Field Cost - 15.02.140				70,000						
				FACILITATING SERVICES									(11,000)	
				INVESTIGATIONS									(10,000)	
				DESIGN AND SPECIFICATIONS									(55,000)	
				CONSTRUCTION SUPERVISION									(17,000)	

7-1482 (5-72)
Bureau of Reclamation
Formerly Basic Estimate DC-1

INSTRUCTIONS FOR USE OF THIS FORM ARE CONTAINED IN CHAPTER 6, PART 152 OF THE RECLAMATION INSTRUCTIONS

PERMANENT OPERATING FACILITIES EQUIPMENT

CONSTRUCTION COST ESTIMATE

Feasibility Estimate

OFFICE PREPARED BY: Western Colorado Projects Office, Durango, Colorado

PROJECT PARADOX VALLEY UNIT, CO, CRBSCP
Date of Estimate May 23, 1977
Prices as of October 1976

GL113.01.220, 240, 260 Sheet 34 of 40

PROPERTY CLASS	IDENTIFIED PROPERTY	PLANT ACCOUNT	PAY ITEM	DESCRIPTION	QUANTITY	UNIT	LABOR AND MATERIALS BY CONTRACTOR Unit Price	LABOR AND MATERIALS BY CONTRACTOR Amount	LABOR AND MATERIALS BY GOVERNMENT Unit Price	LABOR AND MATERIALS BY GOVERNMENT Amount	FIELD COST Plant Account	TOTAL FIELD COST Identified Property	OTHER COSTS Identified Property	TOTAL COST Identified Property
1				2	3		4		5		6	7	8	9
GL 113				CAPITALIZED MOVABLE EQUIPMENT										
	01			PERMANENT OPERATING FACILITIES EQUIPMENT								324,000	96,000	420,000
		220		Transportation Equipment							71,000			
			1	Pickup trucks, 1/2-ton	2	ea	4,500	9,000						
			2	Pickup truck, 4x4, 3/4-ton	1	ea	6,000	6,000						
			3	Flatbed truck with hydraulic crane, 1-1/2-ton	1	ea	11,000	11,000						
			4	Dump truck, 6x4, 5 cubic yard capacity	1	ea	20,000	20,000						
			5	Tilt-bed trailer	1	ea	7,500	7,500						
			6	Allowance for unlisted items (10%)	Lump sum	ls	1s	5,500						
				Subtotal				59,000						
				Contingencies (20%)				12,000						
				Field Cost - GL113.01.220				71,000						
		240		Tools, Shop and Garage Equipment							13,000			
			1	Miscellaneous tools, shop and garage equipment	Lump sum	ls	1s	10,000						
			2	Allowance for unlisted items (10%)	Lump sum	ls	1s	1,000						
				Subtotal				11,000						
				Contingencies (20%)				2,000						
				Field Cost - GL113.01.240				13,000						
		260		Power Operated Equipment							240,000			
			1	D7 tractor crawler with dozer blade	1	ea	75,000	75,000						
			2	Grader with hydraulic 12-foot blade	1	ea	70,000	70,000						
			3	Wheel tractor, diesel, with backhoe and front end loader	1	ea	24,000	24,000						
			4	Portable air compressor, 125 cfm	1	ea	9,000	9,000						
			5	Portable engine-driven arc welder	1	ea	2,000	2,000						
			6	Allowance for unlisted items (10%)	Lump sum	ls	1s	20,000						
				Subtotal				200,000						
				Contingencies (20%)				40,000						
				Field Cost - GL113.01.260				240,000						

PERMANENT OPERATING FACILITIES EQUIPMENT

CONSTRUCTION COST ESTIMATE

Feasibility Estimate

OFFICE PREPARED BY: Western Colorado Projects Office, Durango, Colorado

PROJECT PARADOX VALLEY UNIT, CO, CRBSCP
Date of Estimate May 23, 1977
Prices as of October 1976

GL113.01 - Other costs

Sheet 35 of 40

				DESCRIPTION	QUANTITY	UNIT	LABOR AND MATERIALS BY CONTRACTOR Unit Price	LABOR AND MATERIALS BY CONTRACTOR Amount	LABOR AND MATERIALS BY GOVERNMENT Unit Price	LABOR AND MATERIALS BY GOVERNMENT Amount	FIELD COST Plant Account	TOTAL FIELD COST Identified Property	OTHER COSTS Identified Property	TOTAL COST Identified Property
				1	2	3	4		5		6	7	8	9
GL	113	01		PERMANENT OPERATING FACILITIES EQUIPMENT										
				FACILITATING SERVICES									(12,000)	
				INVESTIGATIONS									(11,000)	
				DESIGN AND SPECIFICATIONS									(60,000)	
				CONSTRUCTION SUPERVISION									(13,000)	

7-1432 (5-72)
Bureau of Reclamation
Formerly Basic Estimate DC-1

INSTRUCTIONS FOR USE OF THIS FORM ARE CONTAINED IN CHAPTER 6, PART 182 OF THE RECLAMATION INSTRUCTIONS

SERVICE FACILITIES EQUIPMENT

CONSTRUCTION COST ESTIMATE

Feasibility Estimate

OFFICE PREPARED BY: Western Colorado Projects Office, Durango, Colorado

PROJECT PARADOX VALLEY UNIT, CO, CRBSCP
Date of Estimate October 17,1977
Prices as of October 1976

GL113.02.210, 250

Sheet 36 of 40

PROPERTY CLASS	IDENTIFIED PROPERTY	PLANT ACCOUNT	PAY ITEM	DESCRIPTION	QUANTITY	UNIT	LABOR AND MATERIALS BY CONTRACTOR Unit Price	LABOR AND MATERIALS BY CONTRACTOR Amount	LABOR AND MATERIALS BY GOVERNMENT Unit Price	LABOR AND MATERIALS BY GOVERNMENT Amount	FIELD COST Plant Account	TOTAL FIELD COST Identified Property	OTHER COSTS Identified Property	TOTAL COST Identified Property
1				2	3		4		5		6	7	8	9
GL 113	02			SERVICE FACILITIES EQUIPMENT								540,000	50,000	590,000
		210		Office Equipment							200,000			
			1	Miscellaneous office equipment	Lump sum	1s	1s	150,000						
			2	Allowance for unlisted items (10%)	Lump sum	1s	1s	15,000						
				Subtotal				165,000						
				Contingencies (20%)				35,000						
				Field Cost - GL113.02.210				200,000						
		250		Laboratory Equipment							340,000			
			1	Miscellaneous laboratory equipment	Lump sum	1s	1s	250,000						
			2	Allowance for unlisted items (10%)	Lump sum	1s	1s	30,000						
				Subtotal				280,000						
				Contingencies (20%)				60,000						
				Field Cost - GL113.02.250				340,000						
				FACILITATING SERVICES									(0)	
				INVESTIGATIONS									(0)	
				DESIGN AND SPECIFICATIONS									(30,000)	
				CONSTRUCTION SUPERVISION									(20,000)	

7-1482 (5-72)
Bureau of Reclamation
Formerly Basic Estimate DC-1

INSTRUCTIONS FOR USE OF THIS FORM ARE CONTAINED IN CHAPTER 6, PART 152 OF THE RECLAMATION INSTRUCTIONS

TEMPORARY CAMP

CONSTRUCTION COST ESTIMATE

Feasibility Estimate

OFFICE PREPARED BY: Western Colorado Projects Office, Durango, Colorado

PROJECT PARADOX VALLEY UNIT, CO, CRBSCP
Date of Estimate October 17, 1977
Prices as of October 1976

GL115.01.130 Sheet 37 of 40

PROPERTY CLASS	IDENTIFIED PROPERTY	PLANT ACCOUNT	PAY ITEM	DESCRIPTION	QUANTITY	UNIT	LABOR AND MATERIALS BY CONTRACTOR Unit Price	LABOR AND MATERIALS BY CONTRACTOR Amount	LABOR AND MATERIALS BY GOVERNMENT Unit Price	LABOR AND MATERIALS BY GOVERNMENT Amount	FIELD COST Plant Account	TOTAL FIELD COST Identified Property	OTHER COSTS Identified Property	TOTAL COST Identified Property
1				2	3		4		5		6	7	8	9
GL 115				SERVICE FACILITIES										
	01			TEMPORARY CAMP - Temporary housing for Government employees, located in Paradox Valley								340,000	70,000	410,000
		130		Structures and Improvements							340,000			
			1	Temporary housing	17	ea	13,000	221,000						
			2	Utilities	Lump sum	ls	ls	35,000						
			3	Allowance for unlisted items (10%)	Lump sum	ls	ls	24,000						
				Subtotal				280,000						
				Contingencies (20%)				60,000						
				Field Cost - GL115.01.130				340,000						
				FACILITATING SERVICES									(0)	
				INVESTIGATIONS									(0)	
				DESIGN AND SPECIFICATIONS									(40,000)	
				CONSTRUCTION SUPERVISION									(30,000)	

7-1482 (5-72)
Bureau of Reclamation
Formerly Basic Estimate DC-1

INSTRUCTIONS FOR USE OF THIS FORM ARE CONTAINED IN CHAPTER 6, PART 152 OF THE RECLAMATION INSTRUCTIONS

CONSTRUCTION OFFICE

CONSTRUCTION COST ESTIMATE

Feasibility Estimate

OFFICE PREPARED BY: Western Colorado Projects Office, Durango, Colorado

PROJECT PARADOX VALLEY UNIT, CO, CRBSCP
Date of Estimate October 17, 1977
Prices as of October 1976

GL115.02.130 Sheet 38 of 40

PROPERTY CLASS	IDENTIFIED PROPERTY	PLANT ACCOUNT	PAY ITEM	DESCRIPTION	QUANTITY	UNIT	LABOR AND MATERIALS BY CONTRACTOR Unit Price	LABOR AND MATERIALS BY CONTRACTOR Amount	LABOR AND MATERIALS BY GOVERNMENT Unit Price	LABOR AND MATERIALS BY GOVERNMENT Amount	FIELD COST Plant Account	TOTAL FIELD COST Identified Property	OTHER COSTS Identified Property	TOTAL COST Identified Property
1				2	3		4		5		6	7	8	9
GL 115	02			CONSTRUCTION OFFICE - Temporary office for Government construction personnel, located in Paradox Valley.								200,000	40,000	240,000
		130		Structures and Improvements							200,000			
			1	Temporary office space	Lump sum	ls	ls	150,000						
			2	Allowance for unlisted items (10%)	Lump sum	ls	ls	15,000						
				Subtotal				165,000						
				Contingencies (20%)				35,000						
				Field Cost - GL115.02.130				200,000						
				FACILITATING SERVICES									(0)	
				INVESTIGATIONS									(0)	
				DESIGN AND SPECIFICATIONS									(20,000)	
				CONSTRUCTION SUPERVISION									(20,000)	

7-1432 (5-72)
Bureau of Reclamation
Formerly Basic Estimate DC-1

INSTRUCTIONS FOR USE OF THIS FORM ARE CONTAINED IN CHAPTER 6, PART 152 OF THE RECLAMATION INSTRUCTIONS

RADIUM FIELD STATION
OTHER PROJECT COSTS

CONSTRUCTION COST ESTIMATE

Feasibility Estimate

OFFICE PREPARED BY: Western Colorado Projects Office, Durango, Colorado

PROJECT PARADOX VALLEY UNIT, CO, CRBSCP
Date of Estimate October 17, 1977
Prices as of October 1976

GL115.03.130

PROPERTY CLASS	IDENTIFIED PROPERTY	PLANT ACCOUNT	PAY ITEM	DESCRIPTION	QUANTITY	UNIT	LABOR AND MATERIALS BY CONTRACTOR Unit Price	LABOR AND MATERIALS BY CONTRACTOR Amount	LABOR AND MATERIALS BY GOVERNMENT Unit Price	LABOR AND MATERIALS BY GOVERNMENT Amount	FIELD COST Plant Account	TOTAL FIELD COST Identified Property	OTHER COSTS Identified Property	TOTAL COST Identified Property
	1			2	3		4		5		6	7	8	9
GL 115	03			RADIUM FIELD STATION - Temporary field office and laboratory space in Dry Creek Basin								130,000	25,000	155,000
		130		Structures and Improvements										
			1	Field station	Lump sum	ls	ls	100,000						
			2	Allowance for unlisted items (10%)	Lump sum	ls	ls	10,000						
				Subtotal				110,000						
				Contingencies (20%)				20,000						
				Field Cost - GL115.03.130				130,000						
				FACILITATING SERVICES									(0)	
				INVESTIGATIONS									(0)	
				DESIGN AND SPECIFICATIONS									(15,000)	
				CONSTRUCTION SUPERVISION									(10,000)	
				DEPRECIATION								-773,000	-0-	-773,000
				SALVAGE								-785,000	-0-	-785,000
				OTHER PROJECT COSTS:										
				INVESTIGATIONS - RECLAMATION FUND								455,600	400	456,000
				CULTURAL RESOURCE PROGRAM								8,000	-0-	8,000

7-1432 (5-72)
Bureau of Reclamation
Formerly Basic Estimate DC-1

INSTRUCTIONS FOR USE OF THIS FORM ARE CONTAINED IN CHAPTER 6, PART 152 OF THE RECLAMATION INSTRUCTIONS

OTHER PROJECT COSTS
(WILDLIFE PROGRAM)

CONSTRUCTION COST ESTIMATE

Feasibility Estimate

OFFICE PREPARED BY: Western Colorado Projects Office, Durango, Colorado

PROJECT PARADOX VALLEY UNIT, CO, CRBSCP
Date of Estimate October 17, 1977
Prices as of October 1976

PROPERTY CLASS	IDENTIFIED PROPERTY	PLANT ACCOUNT	PAY ITEM	DESCRIPTION	QUANTITY	UNIT	LABOR AND MATERIALS BY CONTRACTOR Unit Price	LABOR AND MATERIALS BY CONTRACTOR Amount	LABOR AND MATERIALS BY GOVERNMENT Unit Price	LABOR AND MATERIALS BY GOVERNMENT Amount	FIELD COST Plant Account	TOTAL FIELD COST Identified Property	OTHER COSTS Identified Property	TOTAL COST Identified Property
	1			2	3		4		5		6	7	8	9
				OTHER PROJECT COSTS (continued)										
				WILDLIFE PROGRAM								495,000	95,000	590,000
		100		Land and Rights							330,000			
			1	Aquisition of private shrubland	1,300	ac	200.	260,000						
			2	Aquisition of public land	1,050	ac	0	0						
			3	Allowance for unlisted items (10%)	Lump sum	ls	1s	30,000						
				Subtotal				290,000						
				Contingencies (15%)				40,000						
				Field Cost - Wildlife Program Land and Rights				330,000						
		130		Structures and Improvements							165,000			
				(1) Fencing Right-of-Way at Radium										
			1	Furnishing and installing fencing	15	mi	3,000	45,000						
			2	Allowance for unlisted items (10%)	Lump sum	ls	1s	5,000						
				Subtotal				50,000						
				Contingencies (20%)				10,000						
				Field cost - Fencing Right-of-Way at Radium				60,000						
				(2) Improvements to Land at Radium										
			3	Constructing small earthfill water retention structures	5	ea	4,000	20,000						
			4	Fertilizing range habitat - first application	185	ton	125.	23,125						
			5	Fertilizing range habitat - second application	140	ton	125.	17,500						
			6	Seeding	2,000	ac	10.	20,000						
			7	Allowance for unlisted items (10%)	Lump sum	ls	1s	8,375						
				Subtotal				89,000						
				Contingencies (20%)				16,000						
				Field Cost - Improvements to Land at Radium				105,000						
				Field Cost - Wildlife Program Structures and Improvements				165,000						