RECLAMATION

Managing Water in the West

Arthur V. Watkins Dam Crest Raise, Willard Reservoir Draft Environmental Assessment

PRO-EA-10-010

Weber Basin Project
Box Elder County, Utah
Provo Area Office

U.S. Department of the Interior
Bureau of Reclamation

February 2015

Mission Statements

The mission of the Department of the Interior is to protect and manage the Nation's natural resources and cultural heritage; provide scientific and other information about those resources; and honor its trust responsibilities or special commitments to American Indians, Alaska Natives, and affiliated island communities.

The mission of the Bureau of Reclamation is to manage, develop, and protect water and related resources in an environmentally and economically sound manner in the interest of the American public.

Arthur V. Watkins Dam Crest Raise, Willard Reservoir Draft Environmental Assessment PRO-EA-10-010

Weber Basin Project
Box Elder County, Utah
Upper Colorado Region
Provo Area Office

prepared by *Peter L. Crookston*
Provo Area Office
302 East 1860 South
Provo, Utah 84606
801-379-1152

U.S. Department of the Interior
Bureau of Reclamation

February 2015

Contents

Page

Chapter 1 Need for Proposed Action and Background 1
1.1 Introduction 1
1.1.1 Overview 1
1.2 Background 2
1.3 Purpose, Need, and Scope of Analysis 5
1.4 Permits, Licenses, and Authorizations 6
1.5 Document Organization 7
Chapter 2 Proposed Action and No Action Alternative 8
2.1 Introduction 8
2.2 No Action Alternative 8
2.3 Proposed Action 8
2.3.1 Crest Raise 9
2.3.1.1 Station 17+00 to 60+00 10
2.3.1.2 Station 60+00 to 400+00 10
2.3.1.3 Station 400+00 to 750+00 11
2.3.1.4 Station 750+00 to 810+00 12
2.3.1.5 Borrow Areas 12
2.3.2 Low Level Outlet 13
2.3.3 Low Level Outlet Pipeline 14
2.3.4 State Park 17
2.3.4.1 South Marina 17
2.3.4.2 North Marina 17
2.4 Construction Details 19
2.4.1 Construction 19
2.4.1.1 Crest Raise 20
2.4.1.2 Low-level Outlet 20
2.4.1.3 Low-level Pipeline 20
2.4.1.4 Borrow Areas 21
Chapter 3 Affected Environment and Environmental Consequences 22
3.1 Introduction 22
3.2 Affected Environment 22
3.2.1 Recreation 22
3.2.2 Water Rights 22
3.2.3 Water Resources 24
3.2.4 Water Quality 26

3.2.5 System Operations (A.V. Watkins Dam, Willard Canal and Pumping Plant) ... 30
3.2.6 Public Safety, Access, and Transportation ... 32
3.2.7 Visual Resources ... 32
3.2.8 Socioeconomics ... 34
3.2.9 Cultural Resources ... 34
3.2.9.1 Cultural History ... 35
3.2.9.2 Cultural Resources Status ... 37
3.2.10 Paleontological Resources ... 38
3.2.11 Wetlands and Vegetation ... 38
3.2.12 Wildlife Resources ... 41
3.2.13 Threatened, Endangered, Candidate, Proposed, and Sensitive Species ... 47
3.3 Environmental Effects of Alternatives ... 48
3.3.1 Recreation ... 48
3.3.1.1 No Action Alternative ... 48
3.3.1.2 Proposed Action ... 48
3.3.2 Water Rights ... 50
3.3.2.1 No Action Alternative ... 50
3.3.2.2 Proposed Action ... 50
3.3.3 Water Resources ... 51
3.3.3.1 No Action Alternative ... 51
3.3.3.2 Proposed Action ... 52
3.3.4 Water Quality ... 53
3.3.4.1 No Action Alternative ... 53
3.3.4.2 Proposed Action ... 53
3.3.5 System Operations ... 56
3.3.5.1 No Action Alternative ... 56
3.3.5.2 Proposed Action ... 57
3.3.6 Public Safety, Access, and Transportation ... 58
3.3.6.1 No Action Alternative ... 58
3.3.6.2 Proposed Action ... 59
3.3.7 Visual Resources ... 59
3.3.7.1 No Action Alternative ... 60
3.3.7.2 Proposed Action ... 60
3.3.8 Socioeconomics ... 60
3.3.8.1 No Action Alternative ... 61
3.3.8.2 Proposed Action ... 61
3.3.9 Cultural Resources ... 61
3.3.9.1 No Action Alternative ... 61
3.3.9.2 Proposed Action ... 61
3.3.10 Paleontological Resources ... 62
3.3.10.1 No Action Alternative ... 62
3.3.10.2 Proposed Action ... 62
3.3.11 Wetlands and Vegetation ... 62
3.3.11.1 No Action Alternative ... 62

3.3.11.2 Proposed Action 62
3.3.12 Wildlife Resources 64
3.3.12.1 No Action Alternative 64
3.3.12.2 Proposed Action 65
3.3.13 Threatened, Endangered, Candidate, Proposed, and Sensitive Species 66
3.3.13.1 No Action Alternative 66
3.3.13.2 Proposed Action 66
3.4 Summary of Environmental Effects 67
3.5 Indian Trust Assets 68
3.6 Environmental Justice 69
3.7 Cumulative Effects 69
Chapter 4 Environmental Commitments 70
Chapter 5 Consultation and Coordination 73
5.1 Introduction 73
5.2 Public Involvement 73
5.3 Native American Consultation 73
5.4 Utah State Historic Preservation Office 74
5.5 Utah Geological Survey 74
Chapter 6 Preparers 75
Chapter 7 References 76
Appendices 79

Chapter 1 Need for Proposed Action and Background

1.1 Introduction

The Bureau of Reclamation, Provo Area Office has prepared an Environmental Assessment (EA) under the National Environmental Policy Act of 1969 (NEPA), Public Law 91-90, as amended, the Council on Environmental Quality, and Department of the Interior regulations implementing NEPA. This EA analyzes the potential effects of the proposed action, which would increase the active storage capacity of Arthur V. (A.V.) Watkins Dam in Box Elder County, Utah, from 202,000 acre-feet (AF) to 245,000 AF, by raising the dam 2 feet, in comparison with the No Action Alternative, where the dam would remain unchanged.

1.1.1 Overview

The proposed action would increase the active storage capacity of A.V. Watkins Dam by raising the maximum reservoir water surface by 2 feet and, possibly lowering the minimum reservoir water surface by 5 feet. Raising the maximum water surface elevation would require raising the dam crest. Lowering the dead pool would be accomplished by constructing a new low-level outlet and pumping plant and associated pipeline.

The Weber Basin Water Conservancy District (District) proposes to modify the existing structure to increase the water storage capacity of the dam without affecting the purpose or benefits of the dam. The modifications are needed to allow the District the full use of the existing Weber Basin Project water right. The modifications would allow the District to increase the amount of water available for delivery from Willard Reservoir to meet growing water demands.

This EA analyzes the potential impacts of raising the maximum water surface elevation and lowering the minimum water surface elevation. If potentially significant impacts to the human environment are identified, a Notice of Intent to prepare an Environmental Impact Statement (EIS) would be published in the Federal Register and an EIS would be prepared. If no significant impacts are identified, Reclamation would issue a Finding of No Significant Impact (FONSI).

1.2 Background

Willard Reservoir is an off-channel water storage facility, located 12 miles northwest of Ogden, Utah, in Box Elder County (Figure 1). The extreme southern portion of the project extends into Weber County. The reservoir is contained and controlled by A.V. Watkins Dam. Construction of this earthfill dam was started in 1958, with the first phase of construction completed in 1964 (Reclamation 1958). Several phases of construction were anticipated because of the high levels of settlement expected. The dam is primarily founded on lacustrine deposits of sand, silt, and clay. The dam has a maximum height of 36 feet, a crest length of 76,665 feet (14.5 miles), and contains 17,060,000 cubic yards (yd^3) of material. The crest elevation, or top of the dam, is designed to be at an elevation of 4,235 feet above mean sea level.

As anticipated in the original design, the dam has settled since initial construction. The most recent construction (from 1989 to 1990) restored portions of the dam crest to the design elevation following long-term settlement. Settlement of the dam continues at a slow rate and the current average crest elevation is 4,234 feet.

On the north end of the dam, the outlet works and spillway are combined into one structure. The combined outlet works/spillway discharge capacity is 1,121 cubic feet per second (cfs) at reservoir water surface elevation 4,226.85 feet.

Willard Reservoir has a surface area of approximately 10,000 acres and was originally designed to store a total of 215,000 AF, at a maximum reservoir water surface elevation of 4,226 feet. The dead pool, at elevation 4,205 feet had a designed capacity of 17,000 AF resulting in an active storage capacity of 198,000 AF.

A bathymetric study (study of underwater depth of lake or ocean floors) performed in 2009, indicated that the actual capacity of the reservoir is greater than originally designed. The study revealed that the reservoir has a total storage capacity of 227,000 AF, comprising 202,000 AF in active storage, and 25,000 AF in the dead pool (Figure 2).

Figure 1. Location Map

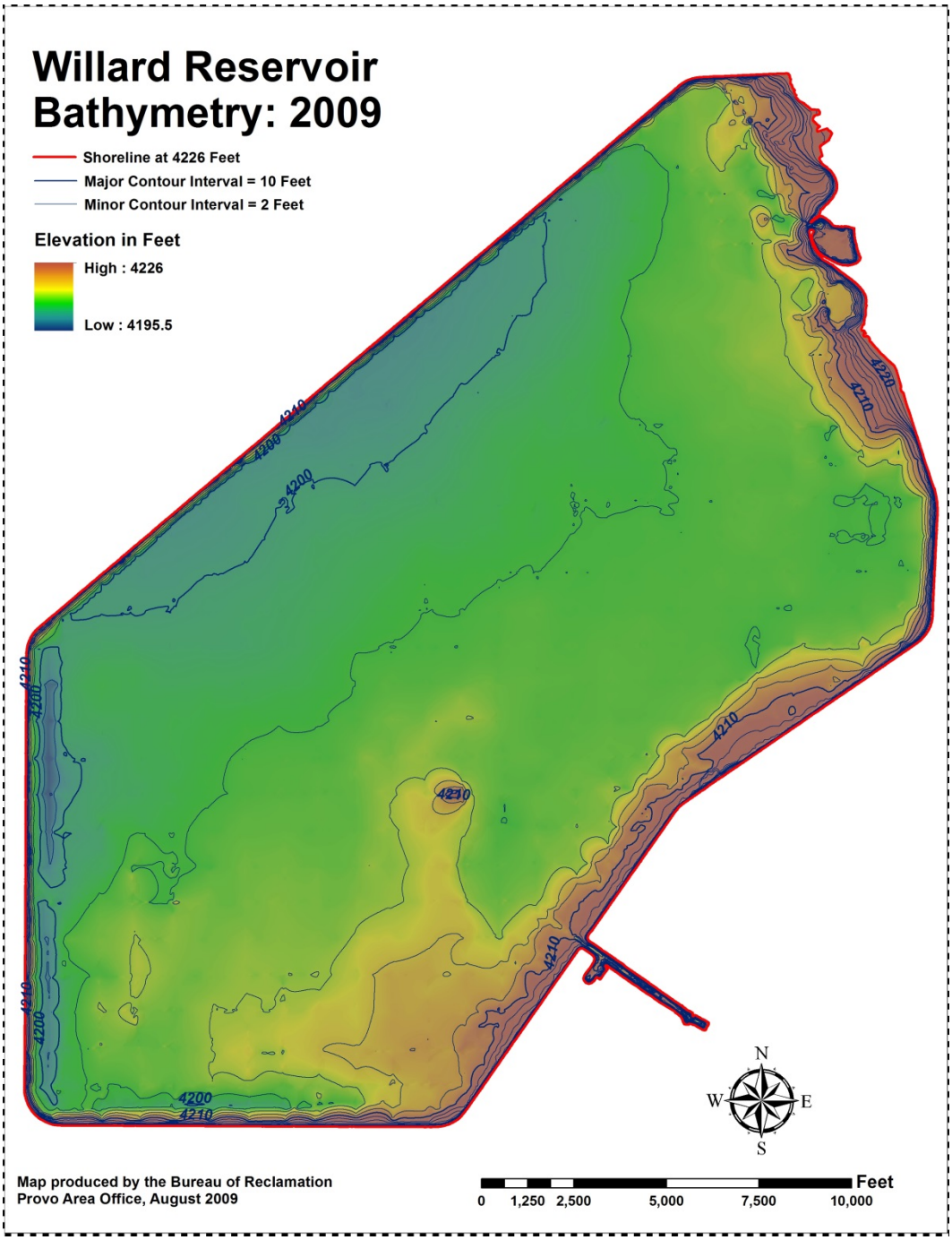

Figure 2. Results of bathymetry survey of Willard Reservoir performed in 2009.

Reclamation holds water rights for the Weber Basin Project that allow for the storage of 250,000 AF of water in Willard Reservoir. In 2010, the State Engineer clarified that the entire 250,000 AF applies to active storage. Therefore, the active storage of A.V. Watkins Dam could be increased to a maximum of 250,000 AF.

The reservoir is fed by the Willard Canal, which receives water through the Slaterville Diversion Dam, located on the Weber River, approximately 8 miles south of the reservoir. The Willard Canal can deliver up to 1,050 cfs, by gravity flow, from the Slaterville Diversion Dam to Willard Reservoir.

The peak demands of the irrigation season are met by augmenting normal flows from the Weber and Ogden Rivers, with water stored in Willard Reservoir. The Willard Pumping Plant No. 1, located adjacent to the reservoir, pumps water from Willard Reservoir into the Willard Canal. Pumping causes the water to reverse direction in the Willard Canal and flow back towards the Slaterville Diversion Dam. Willard Pumping Plant No. 2, located on the Willard Canal, less than 1 mile north of the Slaterville Diversion Dam, provides additional head to return the water to the diversion dam. A portion of the water is released from the Willard Canal through turnouts along the canal according to demands; the remaining water is returned to the Slaterville Diversion Dam, where it is diverted into the Layton Canal, which carries it another 9 miles south for irrigation of Weber Basin Project lands and municipal and industrial (M&I) uses.

A.V. Watkins Dam and Willard Reservoir, are two features of the Weber Basin Project that provide irrigation and M&I water to heavily populated and industrialized lands east of the Great Salt Lake. Weber Basin Project benefits include irrigation, M&I water, fish and wildlife habitat, and flood control. The District assumed responsibility for repayment of construction costs, delivery of water, and general operation of the Weber Basin Project pursuant to a 1952 repayment contract between Reclamation and the District. Reclamation transferred, by contract, to the District full responsibility for operating and maintaining the dam on April 10, 1969.

1.3 Purpose, Need, and Scope of Analysis

The District has identified a future increase in demand on water resources. Projections indicate that the demand for water would outstrip the existing water supply by 2030. The District proposes to increase the storage capacity of A.V. Watkins Dam. The purpose of the Proposed Action is to firm up the District's water supply in order to better meet the increase in demand. The scope of analysis in this EA is limited to consideration of whether or not Reclamation should authorize an increase in the active storage capacity of the Reservoir.

Construction activities associated with the Proposed Action would be limited to lands within Willard Bay State Park (Park), the dam and reservoir's primary jurisdiction zone, and potentially two commercial gravel pits near the reservoir. The majority of construction activities would occur on lands previously disturbed during dam construction phases.

This EA discloses and discusses recommendations to undertake actions for modifying the dam. These actions would be accomplished for the following reasons:

- A.V. Watkins Dam does not have the needed storage capacity to fully utilize the existing Weber Basin Project water rights.

- Reclamation has a contractual obligation to continue water deliveries for irrigation and M&I uses. Such deliveries are dependent upon sufficient water storage capacity at A.V. Watkins Dam.

- Recreational benefits associated with Willard Reservoir and Park should be protected and enhanced if possible.

Proposed modifications to the existing dam would be accomplished in a cost effective and structurally feasible manner, and would meet current safety standards without affecting current dam operations and the purposes of the Weber Basin Project which are: to provide water for M&I and agricultural water use, fish and wildlife habitat, and flood control.

1.4 Permits, Licenses, and Authorizations

Implementation of the Proposed Action could require a number of permits or authorizations from state and Federal agencies. These are summarized below.

- 404 Permit - If required, this permit would be issued to the construction contractor by the U.S. Army Corps of Engineers (USACE), and complies with Section 404 of the Clean Water Act of 1977 (CWA), for actions involving discharges of dredged or fill material into waters of the United States and jurisdictional wetlands.

- Utah Pollution Discharge Elimination System Permit (UPDES) Construction Storm Water Permit - This permit would be issued to the construction contractor by the Utah Department of Environmental Quality (UDEQ), and complies with Section 402 of the CWA for actions disturbing more than 1 acre of land.

- UPDES Construction Dewatering Permit - This permit would be issued to the construction contractor by the UDEQ, and complies with Section 402 of the CWA for actions involving discharges into waters of the United States.

- Section 106 Consultation - Construction pursuant to Section 106 of the National Historic Preservation Act (NHPA), 16 USC 470 with the Utah State Historic Preservation Office (SHPO) and Indian Tribes.

- Section 7 Consultation - Consultation pursuant to Section 7 of the Endangered Species Act (ESA) with the United States Fish and Wildlife Service (USFWS).

1.5 Document Organization

This EA consists of the following chapters:

1. Need for Proposed Action and Background
2. Proposed Action and No Action Alternative
3. Affected Environment and Environmental Consequences
4. Environmental Commitments
5. Consultation and Coordination
6. Preparers
7. References
8. Appendices A and B

Chapter 2 Proposed Action and No Action Alternative

2.1 Introduction

The purpose of the Proposed Action is to increase the active storage capacity of Willard Reservoir. This EA analyzes the potential effects to the human environment from the Proposed Action and will serve, along with other pertinent information, to guide Reclamation's decision regarding implementation of the Proposed Action.

The Proposed Action Alternative is analyzed in this EA, along with a No Action Alternative, to facilitate comparison of potential effects between the two.

2.2 No Action Alternative

The No Action Alternative would not change the storage capacity of the reservoir. Current operations of the reservoir would continue unchanged.

2.3 Proposed Action

The Proposed Action, which is the preferred alternative, would increase the active storage capacity of A.V. Watkins Dam from 202,000 AF to 245,000 AF, and would include the following three components: (1) raising the maximum reservoir water surface and dam crest by 2 feet, from elevation 4,226 feet to 4,228 feet; (2) installing a new low-level outlet to lower the dead pool elevation by 5 feet from elevation 4,205 feet to 4,200 feet; and (3) modifying the existing State Park features to accommodate the increased maximum reservoir water level. These three components are described in detail below. Refer to Figure 3 for an overview of the project area and the locations of the various components of the Proposed Action.

Figure 3. Simplified view of the area surrounding A.V. Watkins Dam and Willard Reservoir.

2.3.1 Crest Raise

In order to raise the normal reservoir water surface 2 feet, the dam crest or top of the dam must also be raised by 2 feet. In general, the crest raise would comprise adding approximately 2 feet of earthfill to the top of the existing embankment, from elevation 4,235 feet to 4,237 feet. Sections of the crest would require additional fill because portions of the dam crest have settled below elevation

4,235 feet. Required earthfill materials include Zone 1 (cohesive soils comprised of clay and silt), Zone 3 (a broad mixture of clay, silt, sand, and gravel), and riprap. Construction activities for the crest raise would occur on the upstream, top, and downstream face of the dam on the initial construction foundation. This would allow construction to proceed without interrupting reservoir operations. Because the width and elevation of the existing crest varies over the length of the dam, the exact configuration of the crest raise would also vary in order to maintain a minimum crest width of 14 feet on the top. The variation in the design and construction of the crest raise is described in the following sections. Station numbers are locations on the dam crest (Appendix A).

2.3.1.1 Station 17+00 to 60+00

Between Stations 17+00 and 60+00, the existing crest elevation varies between 4,234.25 feet and 4,234.5 feet, and ranges between 30 and 35 feet in width. In this reach, the existing crest is wide enough to allow the raise to occur on the top of the dam without the need to extend to the downstream slope.

The typical cross section of the crest raise between Station 17+00 and 60+00 is shown in Figure 4. The raise would require between 2.5 and 2.75 feet of compacted material and riprap. The upstream and downstream faces of the raise would be sloped at 2H:1V. The final crest width would range between 20 and 25 feet.

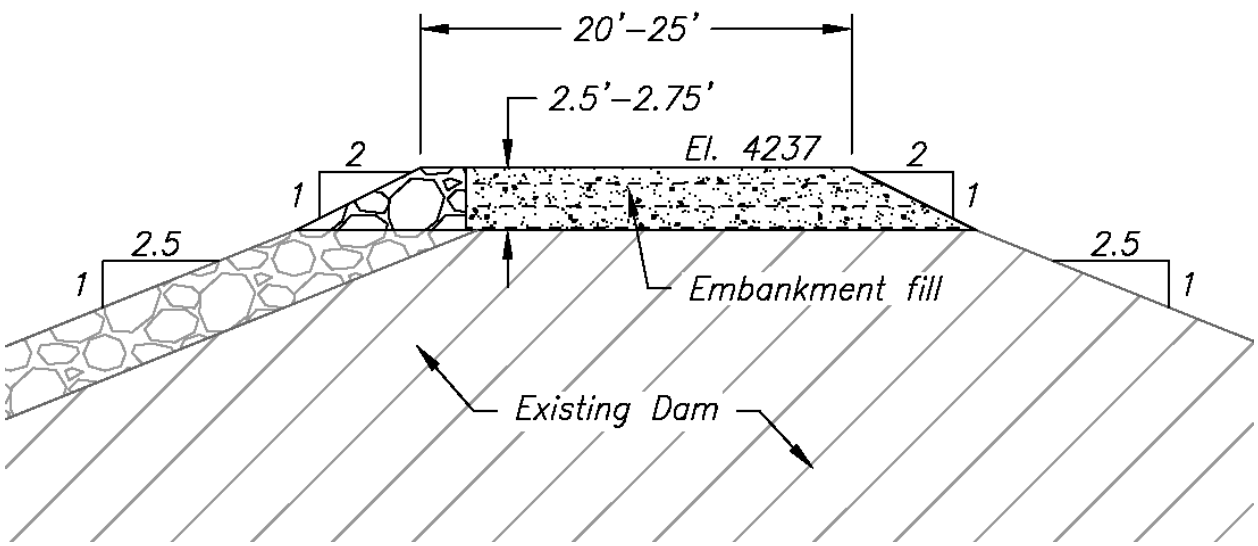

Figure 4. Typical cross section of crest raise from Station 17+00 to 60+00

2.3.1.2 Station 60+00 to 400+00

Between Stations 60+00 and 400+00, the existing crest elevation is approximately 4,234.5 feet and varies in width between 15 and 20 feet. The typical cross section of this reach is shown in Figure 5.

In this reach, approximately 2.5 feet of earthfill would be added to the top of the dam. In order to maintain a minimum crest width of 15 feet, additional material would be added to the downstream face. The material on the downstream face would extend down to the top of an existing berm, located at the toe of the dam. On the upstream face, the riprap would be placed to maintain the existing 1.5H:1V slope.

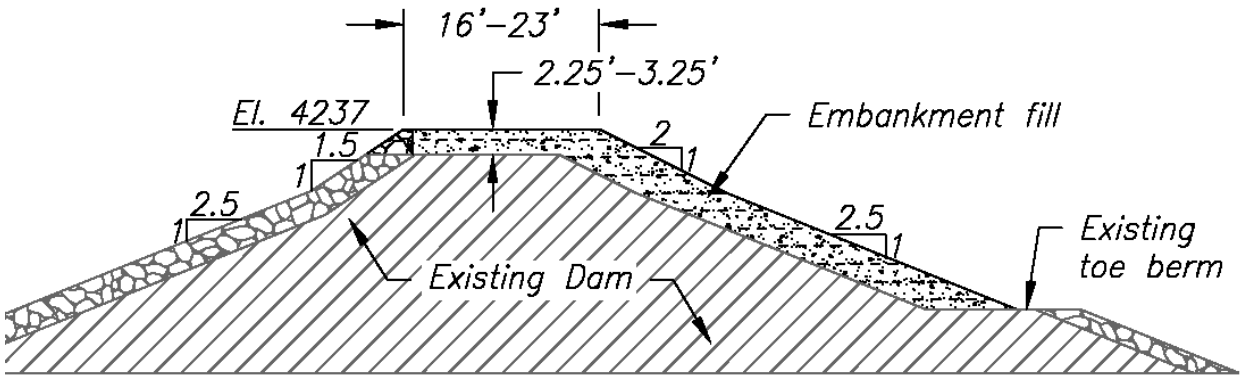

Figure 5. Typical cross section of crest raise from Station 60+00 to 400+00

2.3.1.3 Station 400+00 to 750+00

Between Stations 400+00 and 750+00, the existing crest elevation is approximately 4,235 feet and ranges in width from 21 to 22 feet. The existing crest is wide enough to allow construction of the raise to occur on top of the dam, without extending onto the downstream face, and still produce a minimum crest width of 15 feet. The typical cross section of the crest raise in this reach is shown. The riprap on the upstream face of the raise would be sloped at 1.5H:1V and the downstream face would be sloped at 2H:1V.

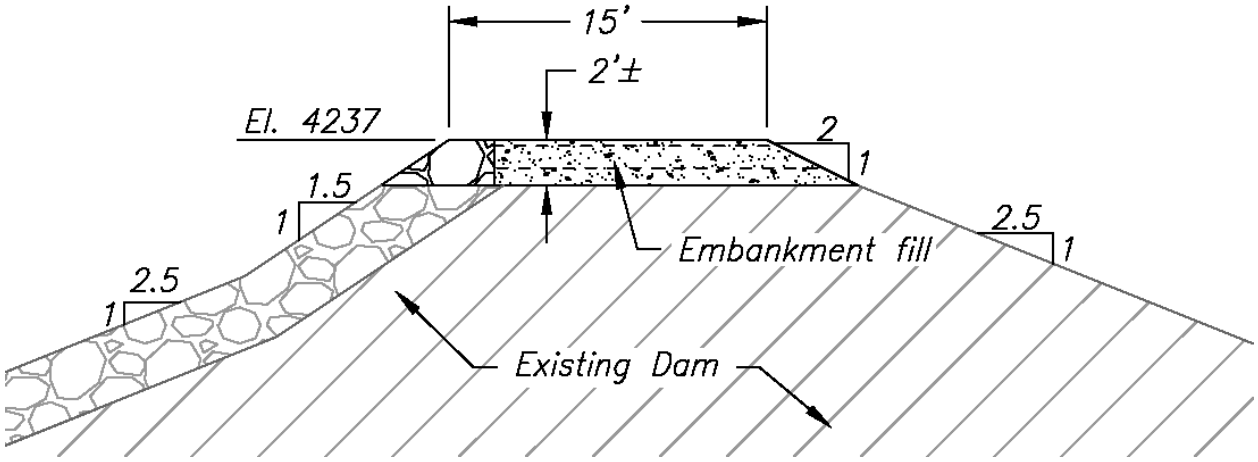

Figure 6. Typical cross section of crest raise from Station 400+00 to 750+00

2.3.1.4 Station 750+00 to 810+00

Between Stations 750+00 and 810+00, the existing crest width ranges from 35 to 50 feet and has an elevation of approximately 4,234 feet, requiring approximately 3 feet of earthfill for the raise. The typical cross section of the dam raise between Stations 700+00 and 810+00 is shown in Figure 7.

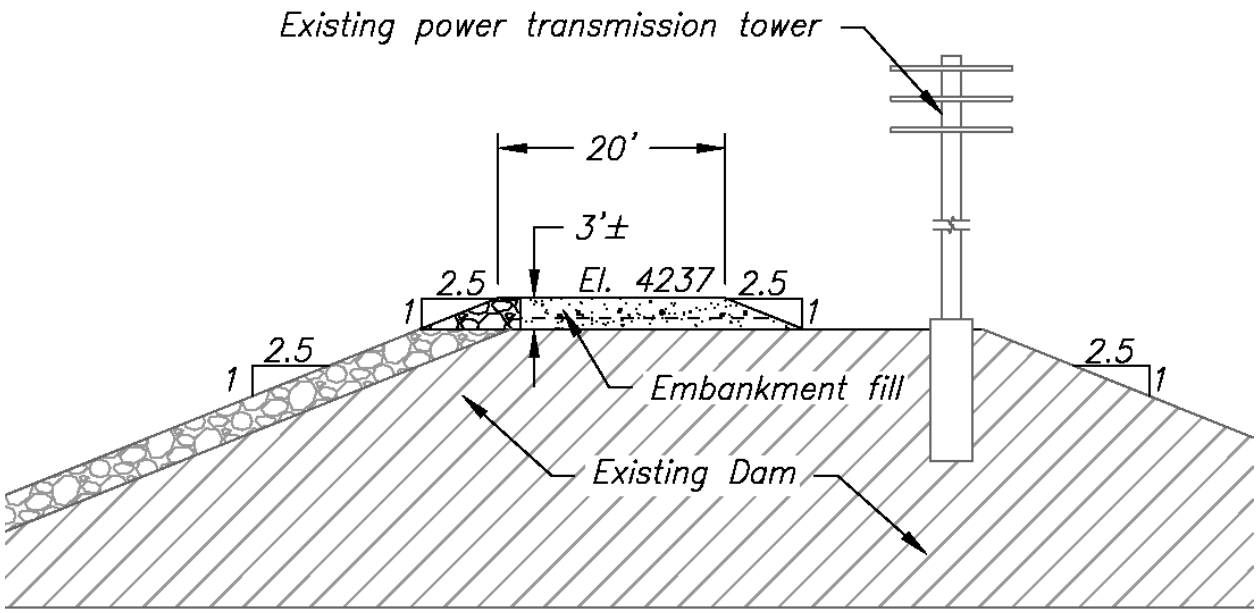

Figure 7. Typical cross section of crest raise from Station 700+00 to 810+00.

Nine existing access ramps would be used to assist in the work of raising the dam. Additional access ramps would be constructed for better access during construction and three of the new access ramps would be left in place after construction to facilitate operation and maintenance (Appendix A).

2.3.1.5 Borrow Areas

Raising the embankment crest would require approximately 100,000 to 200,000 yd^3 of earthfill material. Earthfill materials would be obtained from a combination of onsite borrow and commercial sources (Appendix A). Onsite borrow is available from the North Borrow area, the source of the earthfill used in fourth stage construction in 1989-90. The North Borrow area covers approximately 19 acres and is situated directly north of the North Marina (See Figure 3). A borrow area investigation performed in July 2010, and again in 2014, revealed that the North Borrow area contains gravels, sands, and clays. Initial calculations indicate that the borrow area would produce a total volume of approximately 150,000 to 350,000 yd^3 of material.

A South Borrow area was cleared for use in case more borrow was needed for the access ramps.

2.3.2 Low Level Outlet

The conceptual layout of the new outlet works is shown in Figure 8 and in profile view in Figure 9. The low-level outlet would consist of three principal parts: the intake structure, the gate control structure, and the pumping plant. The intake structure would be located in the southwest corner of the reservoir where the water can be removed down to an elevation of 4,200 feet. The new low-level outlet would replace the existing siphon that delivers water to the Great Salt Lake Minerals Company (GSL Minerals).

The intake structure would feed water to the gate control structure by means of an intake pipe. The gate control structure, utilizing a double gate system, would regulate the amount of water fed to the pumping plant. The two gates in the gate control structure would consist of an upstream guard gate and a downstream regulating gate. The purpose of the guard gate is to provide a positive waterstop when the conduits downstream of the gate control structure need to be emptied (such as would occur during inspections). The guard gate would also provide a means of stopping the water flow in the event that the regulating gate became inoperable. Under normal conditions, the guard gate is set to the fully open or fully closed positions.

The purpose of the regulating gate is to control the amount of water flowing from the reservoir to the pumping plant. The regulating gate would normally be operated in a partially open position. The exact position would depend upon the amount of water required by the pumping plant.

The pumping plant would receive water from the gate control structure and pump it into the new low-level outlet pipeline. The pumping plant would have up to four pumps (with or without variable discharge capabilities) that would provide a maximum discharge capacity of between 100 and 150 cfs. In addition to the high degree of flexibility in the discharge rate, multiple pumps would provide a certain level of redundancy.

An overflow would be incorporated into the pumping plant to allow excess water to freely exit the pumping plant without damaging the infrastructure. The existing GSL Minerals Canal, between the pumping plant and the South Drain, would be removed from active service and converted into a dry channel that would carry water from the emergency overflow in the pumping plant to the South Drain. Once in the South Drain, the overflow water would flow to the Great Salt Lake.

Water deliveries to GSL Minerals would occur by replacing the decommissioned portion of the GSL Minerals Canal, with a pipeline connected to the pumping plant.

The flow capacity of the existing siphon decreases with decreasing reservoir elevation. At a reservoir elevation of approximately 4,216 feet, the District installs temporary pumps to supplement flows from the siphon to provide the full

quantity of water to GSL Minerals. At an elevation of 4,213 feet, the siphons cease to function reliably and the District is forced to pump all of the water delivered to GSL Minerals. The new low-level outlet of the proposed action would be able to consistently deliver water to GSL Minerals at low reservoir levels without the need to pump.

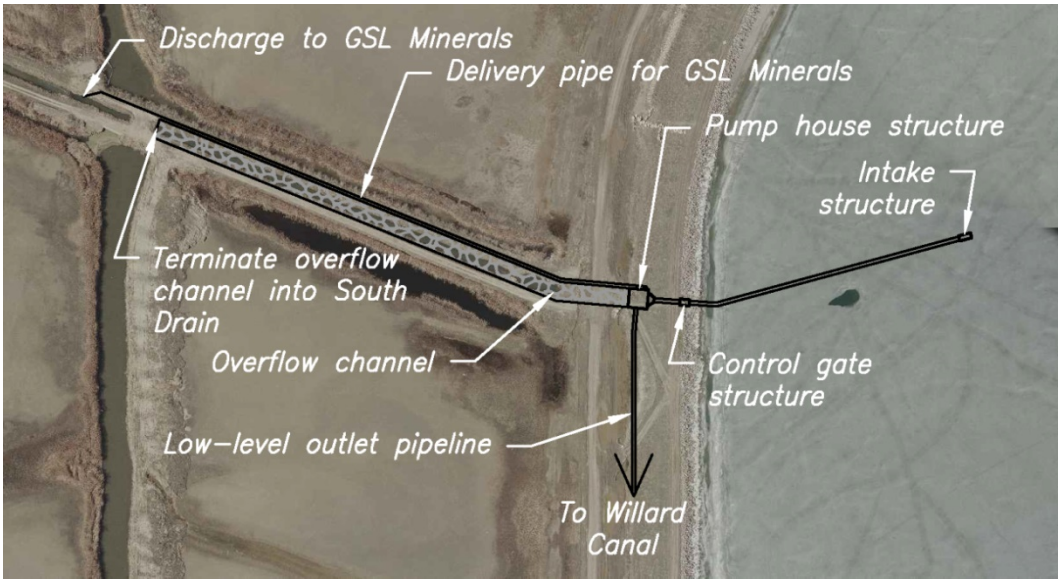

Figure 8. Plan view of the conceptual layout of new low-level outlet.

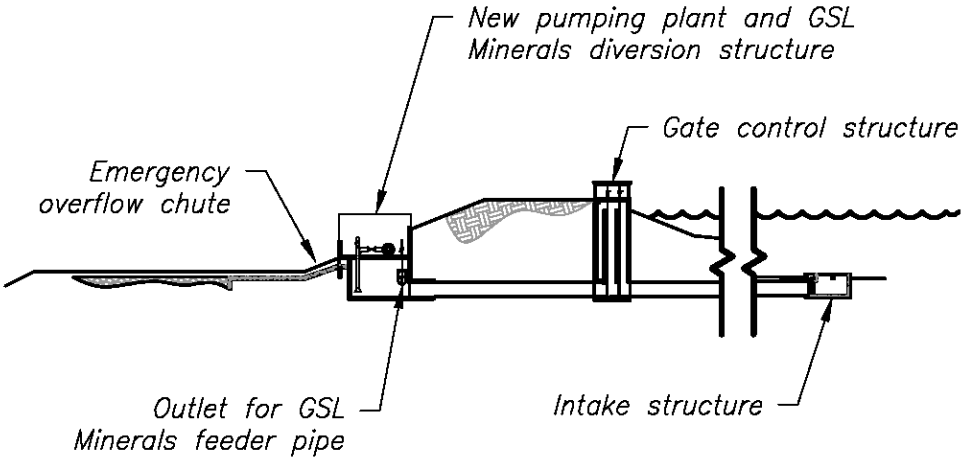

Figure 9. Profile view of the proposed low-level outlet.

2.3.3 Low Level Outlet Pipeline

The pipeline would be constructed using high density polyethylene (HDPE) pipe between 5 and 6 feet in diameter. As shown in Figure 10, the new pipeline would

begin at the new pumping plant and run parallel to the dam between Points 1 and 2. At Point 2, the pipeline would diverge away from the dam and head to its discharge point at the end of Willard Canal.

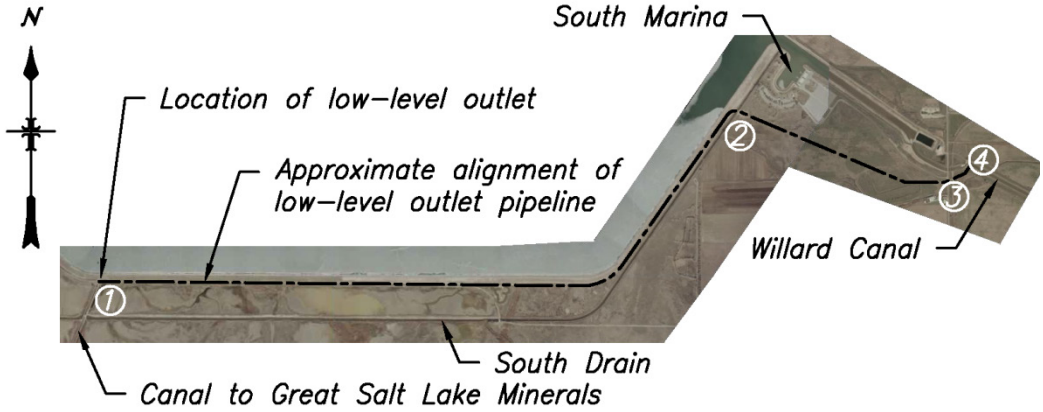

Figure 10. Approximate alignment of proposed low-level outlet pipeline.

The alignment was chosen to ensure the pipeline remained within Reclamation's primary jurisdiction zone. The pipeline will be constructed using one of two possible construction techniques.

The first option consists of the conventional construction technique of burying the pipeline in a trench. If this technique is chosen, the pipe would be buried in a trench 9 to 10 feet deep and approximately 9 to 11 feet wide at the ground surface. The top of the pipe would be at least 3 feet below the existing ground surface. The trench would be backfilled to the existing ground surface (see Figure 11).

Between Points 1 and 2 (approximately 15,000 feet; shown on Figure 11, the pipe would be located approximately 50 feet from the toe of the dam (about midway between the toe and the South Drain). The pipe would continue underground between Points 2 and 4 (approximately 5,200 feet) along the alignment shown in Figure 10. At Point 2, the pipeline would cross underneath the South Drain; at Point 3, the pipe would cross under the county road (2000 West).

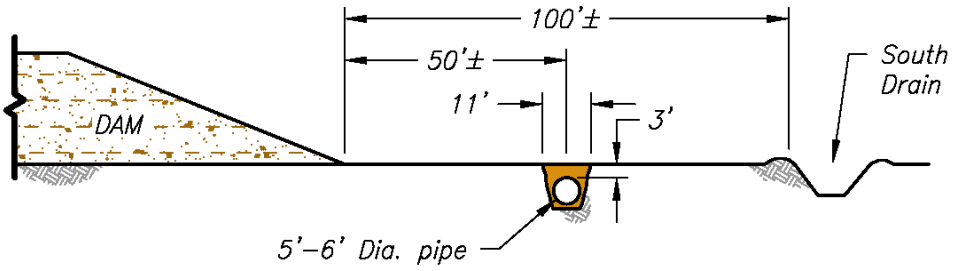

Figure 11. Cross section of buried low-level outlet pipeline (conventional construction).

If conventional construction was not chosen, the pipeline would be constructed on top of the existing surface and covered with a berm to protect the pipe (see Figure 12 and 13). Between Points 1 and 2 (15,000 feet), the pipe would be located at the downstream toe of the dam. A berm between 8 and 9 feet tall and 38 to 43 feet wide would cover the pipe (see Figure 12).

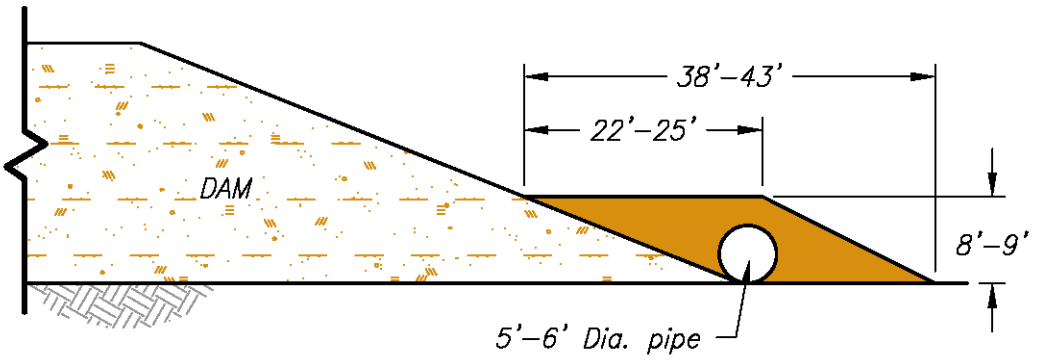

Figure 12. Cross section of proposed low-level pipeline at the downstream toe of the dam.

At Point 2, the pipeline would cross above the South Drain and head towards Willard Canal along the alignment shown in in Figure 10. The cross section of the berm over the pipe between Points 2 and 3 (4,800 feet) would be as shown in Figure 13. The berm's height would range from 8 to 9 feet; its total width would range from 34 to 39 feet. At Point 3, the pipeline would cross underneath the county road (2000 West) and continue underground (for approximately 400 feet) to Willard Canal. The pipe trench between Points 3 and 4 would have the same dimensions as shown in Figure 11.

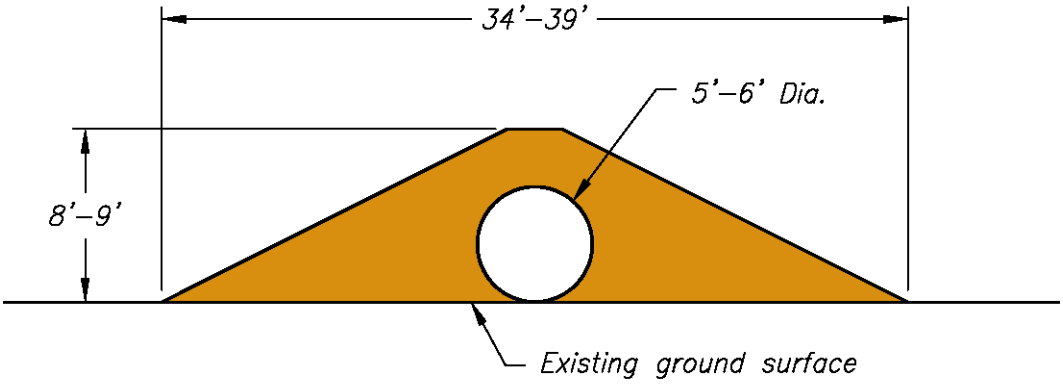

Figure 13. Cross section of low-level outlet pipeline constructed above ground.

2.3.4 State Park

The Willard Bay State Park is operated by the Utah Division of Parks and Recreation (State Parks). It is located adjacent to Willard Reservoir and is divided into the South Marina and the North Marina (see Figure 3). The South Marina is located in the middle of the southern arm of the reservoir and consists of a small campground and day-use area, a small marina and associated boat docks, ramp, and parking lot. The North Marina is located at the northeast corner of the reservoir and consists of a larger marina, boat docks, ramp, a large campground, several day-use areas, and parking lots.

2.3.4.1 South Marina

Except for the boat dock and ramp, the facilities of the South Marina are located well above the reservoir high water elevation. A 2 feet increase in maximum water surface would have no impacts on the South Marina.

2.3.4.2 North Marina

The facilities of the North Marina lie partially within the reservoir basin near the high water elevation and would be impacted by an increase in water surface elevation. A 2 feet raise would impact bridges, campground sites, roads, a power supply transformer, sidewalks, a nature trail, beach areas, the breakwater crest, and day use grassy areas. The Americans with Disabilities Act (ADA) access ramp, boat docks, and lift station would have to be modified to function with a 2 feet raise in water level (Appendix B).

Willow Creek Campground:

1. To accommodate the higher water as a result of the dam raise, the one lane bridge on the north end of Willow Campground would be raised 2 feet. The existing head and wing walls would be saw cut just below the bridge deck so that the bridge deck could be lifted off. The wing and head walls would be extended upwards by 2 feet and a new bridge deck constructed. The new walls and bridge deck would be constructed to resemble the existing bridge with regards to architectural features. Approaches on both sides of the bridge would need to be modified accordingly to allow smooth travel over the new bridge deck. To avoid impacts, all work would be conducted outside of the drainage channel.

2. Several campsites along the shore line, one by the drainage inlet, and one at the "Y" in the road along with a low spot in the road would need to be raised above the 4,228 feet elevation. Picnic pads, fire rings, and tent camping areas would be raised by filling with dirt. Most of the fill would start just above the current high water elevation of 4,226 feet and slope up to the elevation of 4,228 feet. Care would be taken to ensure proper drainage. The filled areas would be reseeded to allow the vegetation to recover as soon as possible and reduce impacts to the Park and its guests.

Three of the campsites on the north shore line would be filled to raise the use area above the 4,228 feet elevation. Fill material for these sites would come from within the reservoir basin below the high water elevation. Dredging material from the reservoir basin would improve the boat access to the campsites near the shore, as well as provide material for raising the Park.

3. A large portion of the road and camp pullouts in this area would need to be raised and grades adjusted with new paving. Road sections would need a new surface of 3-inch asphalt to bring the surfaces to the new elevations.

4. The transformer that supplies power for the two restroom buildings would be raised above the new high water mark. The ground surface would be raised in this area in coordination with the power company.

5. Riprap material may be required where dredging would increase shoreline and basin slopes.

Cottonwood Campground:

No impacts to Cottonwood Campground are evident.

Eagle Beach:

1. The sidewalk and grass areas along the north end of the beach would have portions inundated during high water events. These sidewalks would be either raised or relocated to accommodate the high water elevation.

2. The newly constructed nature trail through the recently rehabilitated area has portions of the trail, at or below the 4,228 feet elevation. These portions of the trail would be raised by placing additional fill material on the existing trail. Some of these areas would need as much as 2 feet of new fill material, but most of the trail would only require 6 to 12 inches. The width of the new trail should allow for this material to be placed within the existing footprint. Work would be done such that recently rehabilitated vegetation would not be affected.

3. Eagle Beach recreation area would be impacted when the reservoir is full in the spring. The high water line would be 2 feet higher, inundating much of the beach area.

Boat Ramp/Marina Area:

1. The north breakwater crest would be raised above the 4,228 feet elevation. The crest would need the brush removed to allow equipment to access this area, with fill material and riprap placed above the 4,226 feet elevation. The result would be steepening the side slopes to raise the crest and top

elevation to 4,230 feet. Riprap would be of sufficient size to withstand erosion by the buffeting heavy wave action of the breakwater.

2. Day use grass areas and benches would be raised above the 4,228 feet elevation. Soil would be graded to save as many of the trees and features as possible. Dredge material from the reservoir basin would be used as fill in these areas.

3. The ADA access concrete ramp that connects to the boat ramp would be relocated to adjust to the higher water level.

4. Boat docks would be extended with new panels installed to accommodate access above the new high water.

5. Additional riprap would be placed to the 4,228 feet elevation on the south breakwater to protect against erosion from the buffeting of wave action.

6. The south parking lot on the breakwater would need a wall to protect against high water wave action. This would be constructed by installing sheet piles just above the 4,226 feet elevation, extending up above the existing parking lot elevation by a minimum of 3 feet. The area between the parking lot and the sheet pile wall would be filled. The contractor may use dredge material from the harbor basin. The contractor may also use material from the same dredge site in the reservoir basin used to rehabilitate Willow Creek Campground.

7. The lift station would have the top elevated and a hardened barrier installed to protect it from wave action. This would be included as part of the breakwater wall.

2.4 Construction Details

2.4.1 Construction

To a large extent, construction work would be restricted to previously disturbed areas. Along the north and northwest reaches of the dam, the lowest stage of the dam embankment (stage one construction) extends to the edge of the Great Salt Lake (approximately 200 to 300 feet from the downstream toe of the dam). In this area, construction work would be allowed to utilize all or any part of the original dam embankment between the dam and the Great Salt Lake. Along the south and southeast reaches of the dam, construction work would be allowed anywhere on the original dam embankment between the dam and the South Drain. This covers an area that extends about 200 feet from the downstream toe of the dam. On the west side, wetland areas are located close to the base of the dam. In this area, construction work would be allowed on the existing road located at the

downstream toe of the dam. Within the Park, construction work would be restricted to only those areas needed to complete the work.

Existing access roads would be utilized for equipment travel. Most, if not all, of the existing roads may require some type of improvement to allow travel of heavy equipment. Road improvements would consist of surfacing the roads with imported granular road base-type materials. These roads may require periodic maintenance to keep the road surface smooth and free of ruts and holes.

2.4.1.1 Crest Raise

Construction of the crest raise would require a moderate amount of the existing embankment crest be excavated and stockpiled for later use. Riprap at the top of the upstream face of the dam would also be removed and stockpiled for reuse. The riprap could be stockpiled either on the flat ground downstream of the dam on the original dam embankment, or on the upstream face of the dam. The reservoir level would not need to be restricted to allow construction of the crest raise.

2.4.1.2 Low-level Outlet

Construction of the low-level outlet would require excavation and backfilling operations in three areas: in the existing embankment, between the embankment and the South Drain, and in the reservoir basin itself. A temporary cofferdam would be installed upstream of the dam to isolate the construction area from the reservoir. The reservoir would be drawn down to elevation 4,216 feet while the temporary cofferdam was in place. Construction of the low-level outlet would require one construction season, between midsummer and late spring, working through the winter.

Excavated material would be stockpiled within previously disturbed areas adjacent to the dam. The completed structure would be backfilled and the ground graded to original contours. In the case of the embankment, the original contours of the embankment would be restored. The downstream face of the dam and the area downstream of the dam would be re-vegetated with an appropriate seed mix and planting methods. The temporary cofferdam would then be completely removed.

2.4.1.3 Low-level Pipeline

The low-level outlet pipeline lies completely outside the reservoir; it could be constructed at any convenient time and would not require a drawdown of the reservoir. However, during construction of the pipeline outlet at Willard Canal, the canal would need to be drained, at least in the vicinity of the pipeline outlet. Construction of the pipeline would take place outside of freezing temperatures. Construction of the pipeline outlet would take place in the fall, when Willard Canal could be taken out of service to allow the construction of the outlet.

For the portions of the pipeline built above ground, a certain amount of clearing, grubbing, and stripping would be required. The ground under the proposed pipe would be stripped to mineral material, approximately 1 foot deep. The stripped topsoil would be stockpiled and reused to surface the berm at the end of construction. The disturbed land would be appropriately revegetated.

For the buried portion of the pipeline, the topsoil would be stockpiled and reused after construction of the pipeline. Soil excavated to make room for the pipeline would be used to backfill around the pipe. Any remaining soil would be used to construct other components of the project as needed. Disturbed areas would be appropriately revegetated.

2.4.1.4 Borrow Areas

If utilized, disturbed areas in the North and South Borrow Areas would be graded smooth to a natural appearance and appropriately revegetated (See Appendix B). These areas may be constructed and reseeded as wetlands depending on a sufficiently high ground water table.

Chapter 3 Affected Environment and Environmental Consequences

3.1 Introduction

This chapter describes the resources of the human environment that could be affected by the Proposed Action or No Action Alternatives and the predicted impacts of the actions. These impacts are discussed under the following resource issues: recreation; water rights; water resources; water quality; system operations; public safety, access, and transportation; visual resources; socioeconomics; cultural resources; paleontological resources; wetlands and vegetation; wildlife resources; and threatened, endangered, and sensitive species. The present condition or characteristics of each resource is discussed first, followed by a discussion of the predicted impacts under the No Action and Proposed Action Alternatives. The environmental effects are summarized in Table 5.

3.2 Affected Environment

3.2.1 Recreation

Recreation functions on and around the reservoir area consist of the Park, the Willard Bay Wildlife Management Area, and the Harold S. Crane Waterfowl Management Area. The Park and wildlife area are associated with the Weber Basin Project and are managed by the Utah Department of Natural Resources (UDNR) through an agreement with Reclamation (Wilson, 1993). The waterfowl area is operated by UDNR under a separate agreement with Reclamation. Located to the north of the reservoir is the Bear River National Migratory Bird Refuge and to the south is the Ogden Bay Waterfowl Management Area (Ogden Bay WMA).

The Park was recently renovated and offers day-use and camping facilities, boat launch ramps, and group-use areas. Two separate marinas provide boaters with access to Willard Reservoir. The reservoir and surrounding wildlife area support excellent warm water fishing, limited upland game bird and waterfowl hunting, boating, water skiing, swimming, camping, and wildlife viewing. The Park has averaged 279,140 recreation visits annually for the 10-year period: 2003 to 2013. The majority of visitors tend to participate in a combination of activities.

3.2.2 Water Rights

Water storage in Willard Reservoir primarily occurs under two Utah water rights, Application to Appropriate Nos. A27612 (Water Right No. 29-882) and A27613

(Water Right No. 35-831). Both of these appropriations were filed on October 8, 1955, which is their priority date. Water Right No. 29-882 allows Willard Reservoir to store up to 10,000 AF of Willard Creek flows, which naturally drain into Willard Reservoir near the entrance of the north recreational facilities. Water Right No. 35-831 allows 250,000 AF of Weber River flows to be diverted at the Slaterville Diversion Dam, and conveyed by the Willard Canal for storage in Willard Reservoir. Both of these water rights allow the stored water to be diverted from the reservoir and used within the Weber Basin Project service area for project purposes.

The storage component in both of these appropriations state that water can be stored any time of the year when the right is in priority, and that the reservoir would have a capacity of 250,000 AF. In order to see how the combined storage capacity of these two appropriations would be interpreted by the Utah Division of Water Rights, Reclamation met with Utah State Engineer, Kent L. Jones, on February 8, 2010. In response to this meeting, Mr. Jones sent Reclamation a letter on March 1, 2010 which states:

> "My opinion is that the Willard Bay Reservoir could be modified to allow the active storage of 250,000 AF. If modifications or improvements are made to the reservoir in such a manner that the active storage does not exceed 250,000 AF, the project could be constructed under the existing water right approvals without additional State Engineer authorization. Regardless, the applicant is limited to a maximum annual diversion of 250,000 AF from the Weber River and 10,000 AF from Willard Creek."

One point made clear in this letter, is that the reference to 250,000 AF storage capacity in these appropriations, would be considered the active storage capacity and does not include the dead pool.

Application to appropriate Nos. A27612 and A27613, were approved on October 6, 1958, and Reclamation has diligently filed the necessary "Extension of Time" requests to the Utah State Engineer to keep these applications active. By statute, the State Engineer generally grants all extension requests made by public water suppliers, including Reclamation, for the first 50 year period from the time the applications are approved. After 50 years, the State Engineer may approve Extension Requests made by public water suppliers if the water right is being held is necessary to meet the future reasonable needs of the public. The reasonable future water requirements of the public is defined in Utah Water Law as the amount of water needed in the next 40 years by the people within the public water supplies service area.

The supply and demand studies commissioned by the District, clearly show that within the next 40 years the full 250,000 AF Willard Reservoir water rights will be needed to meet future public needs within the District's service area. Therefore, Reclamation should be able to continue filing extension requests on

these storage rights until full development of these water rights occurs. Proof of beneficial use and certificate would then be filed to perfect the water rights.

3.2.3 Water Resources

A.V. Watkins Dam is an offstream structure which contains and controls Willard Reservoir. Willard Reservoir is one of six Federal reservoirs, and one private reservoir, that comprise the Weber Basin Project. The Weber Basin Project conserves and utilizes, for multiple use purposes, stream flows in the natural drainage basin of the Weber River and the basin of the Ogden River. Water from Willard Reservoir, which is located on the shores of the Great Salt Lake, is used for irrigation in the lower Weber River Basin.

The Weber River watershed encompasses nearly 2,500 square miles. While elevation within the basin ranges from 4,200 feet at the Great Salt Lake to nearly 12,000 feet high in the Uinta Mountains, most of the drainage is a flat, fertile plain, which was formed by alluvial deposits from Lake Bonneville. The mean annual precipitation in the watershed is approximately 23 inches. It is estimated that about 70 percent of the total precipitation within the watershed on average is consumed without producing measurable runoff (UDNR 2010). The mean annual runoff for the Weber River (near Plain City) is 341,100 AF (United States Geological Survey 2013), though runoff volumes vary greatly from year to year.

The headwaters of the Weber River are located at the northwestern edge of the Uinta Mountains in Summit County, Utah. The 125-mile river flows west to Oakley, Utah, before turning to travel northwest to its terminus in the Great Salt Lake. The Ogden River, which is a major tributary to the Weber River, lies within Weber County and enters the Weber River about 12 miles upstream from its mouth.

The flows of the Weber River and its tributaries, which in addition to the Ogden River, include: East Canyon Creek, Lost Creek, Chalk Creek, and Beaver Creek are highly regulated by seven major reservoirs. With one exception, these reservoirs were constructed as part of Reclamation's Weber Basin Project. Echo (Weber River Project) and Rockport reservoirs are located on the mainstem of the Weber River, while Pineview, Causey, East Canyon, Lost Creek, and Smith and Morehouse (private) Reservoirs are located on tributaries. Water from the Weber River is diverted at the Slaterville Diversion, located west of the city of Ogden, and conveyed over 10 miles north into the Willard Reservoir, the last major reservoir in the Weber River Basin.

Water available to the Weber Basin Project for storage in the Willard Reservoir consists of both the natural flows of the Weber and Ogden Rivers, not required for prior rights, and storage releases from the upstream reservoirs. The natural flows include surplus spring runoff flows not regulated by upstream reservoirs, winter flows released through upstream powerplants, return flows, and other river inflows below upstream reservoirs.

The District is obligated by a contract (Contract No. 14-06-400-4643) to meet minimum instream flow requirements in the lower Weber River and through the Ogden Bay WMA in particular. The minimum flows vary seasonally from 20 to 150 cfs, as shown in Table 1. If natural flows originating below Slaterville Diversion are insufficient to meet these requirements, minimum flows must be met through natural Weber River flows originating above the diversion or from Weber Basin Project storage.

Table 1

Ogden Bay Waterfowl Management Area Minimum Instream Flow Requirement

Time Period	Minimum Flow Requirement
December 11 to February 28	20 cfs
March 1 to April 10	50 cfs
April 11 to June 15	135 cfs
June 16 to October 15	80 cfs
October 16 to December 10	150 cfs

Approximately 8 miles downstream of the Slaterville Diversion, flows in the Weber River are measured by USGS streamflow gage 10141000, on the Weber River near Plain City, Utah. The USGS has provided daily data from this gage from 1907 to present. Data from the period Water Year (WY) 1969, when operations of Willard Reservoir were transferred to the District to present, were reviewed for this study. As shown in Figure 14, the highest streamflows are typically observed in April, May, and June; average flows in both April and May exceed 1,000 cfs. Following the spring runoff peak, streamflows rapidly decline, and are at their lowest during the summer months. Average flows during July, August, and September are below 200 cfs. Winter time base flows range from 200 to 400 cfs.

Data for the 5-year period from WY 2009 to WY 2013, reflect the most recent operations of the Weber Basin Project, and do not include the impacts of construction at A.V. Watkins Dam (2007-2008). In addition, this period includes a balance of wet (2011), dry (2012, 2013), and normal (2009, 2010) hydrologic years. A comparison of flows during this period against the longer duration (WY 1969 – WY 2013) shows that Weber River flows at Plain City have not changed. Both the recent 5-year and long-term (46-year) records indicate that Weber River flows at Plain City are well above the required minimum throughout much of the year, and during the spring in particular.

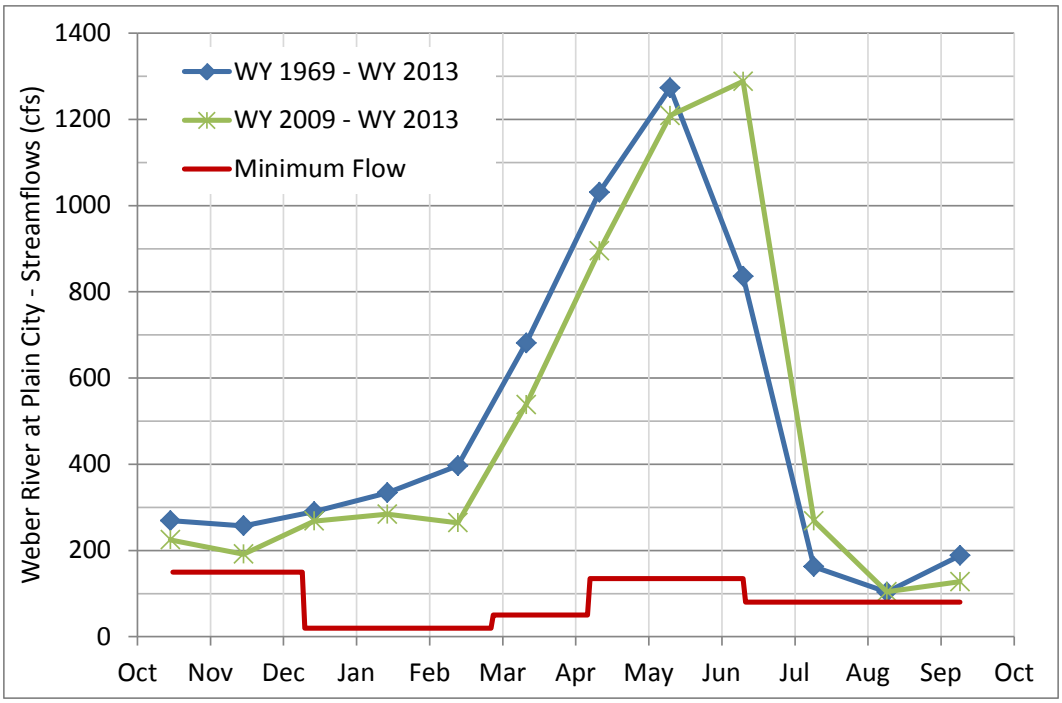

Figure 14. Average Monthly Flows at USGS 1014100, Weber River near Plain City, Utah. In Comparison with Minimum Flow Requirements.

3.2.4 Water Quality

Willard Reservoir is a shallow, off-channel reservoir constructed to store water diverted from the Weber River. The reservoir has a surface area of 10,000 acres, and a mean depth of 21.5 feet (6.55 meters). The reservoir is classified and protected by the State of Utah for the following beneficial uses (Utah Administrative Code):

> Class 1C -- Protected for domestic purposes with prior treatment by treatment processes as required by the Utah Division of Drinking Water.
>
> Class 2A -- Protected for frequent primary contact recreation where there is a high likelihood of ingestion of water or a high degree of bodily contact with the water. Examples include, but are not limited to: swimming, rafting, kayaking, diving, and water skiing.
>
> Class 2B -- Protected for infrequent primary contact recreation. Also protected for secondary contact recreation where there is a low likelihood of ingestion of water or a low degree of bodily contact with the water. Examples include, but are not limited to: wading, hunting, and fishing.
>
> Class 3B -- Protected for warm water species of game fish and other warm water aquatic life, including the necessary aquatic organisms in their food chain.

Class 3D -- Protected for waterfowl, shore birds, and other water-oriented wildlife not included in Classes 3A, 3B, or 3C, including the necessary aquatic organisms in their food chain.

Class 4 -- Protected for agricultural uses including irrigation of crops and stock watering.

Utah's 2006 Integrated Report Volume I – 305(b) Assessment lists Willard Reservoir as a Category 2 water, meaning it fully supports assessed beneficial uses, but there is insufficient or no data to assess all beneficial uses (Utah, 2006). Water quality monitoring data were collected at Willard Reservoir as early as 1965, by several organizations including the District, Utah Division of Water Quality (Utah DWQ), and Reclamation. More recently regular monitoring has been conducted by Utah DWQ on a biennial basis and consists of collecting physical, chemical, and biological samples and data. The samples and data are collected at four monitoring locations in the reservoir basin (see Figure 15).

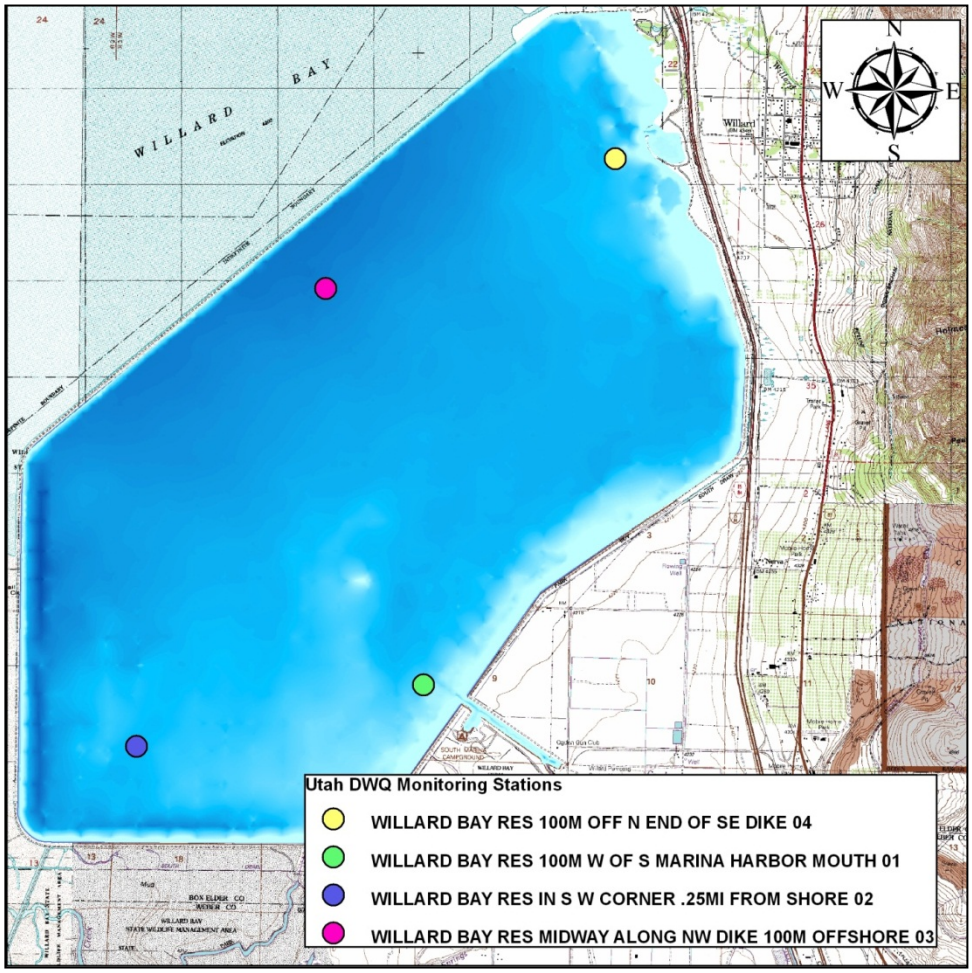

Figure 15. Utah DWQ water quality monitoring locations on Willard Reservoir.

Water quality monitoring data collected by Utah DWQ were available through the U.S. Environmental Protection Agency's (EPA) online storage and retrieval System Database (STORET). The data for Willard Reservoir represents over 5,000 measurements and samples for the period 1978 through 2007. Table 2 presents a summary of water quality monitoring, and Table 3 presents a summary of trace element monitoring at Willard Reservoir from 1978 through 2007. Included in the tables are information about the number of samples or measurements collected for a particular parameter, the number of samples and measurements resulting in a non-detect, or a result below the reporting limits, and the average concentration of each parameter for the time period.

Table 2
Summary of Water Quality Monitoring at Willard Reservoir (1978 to 2007)

Parameter	Samples Collected	Non-detect Samples	Average Concentration[1]
Alkalinity, Carbonate as CaCO3 (mg/L)	30	0	166
Calcium (mg/L)	37	0	43.0
Carbon, Total Organic (TOC) (mg/L)	27	0	8.84
Chloride (mg/L)	30	0	183
COD, Chemical Oxygen Demand (mg/L)	38	15	16.9
Dissolved oxygen (DO) (mg/L)	487	0	6.69
Fluoride (mg/L)	12	0	0.197
Hardness, Ca + Mg (mg/L)	37	0	202
Magnesium (mg/L)	37	0	23.0
Nitrogen, ammonia as N (mg/L)	203	155	0.082
Nitrogen, Inorganic (Nitrate + Nitrite) (mg/L)	190	109	0.171
Nitrogen, Total Kjeldahl (mg/L)	67	0	0.508
pH	515	0	8.34
Phosphorus, Dissolved (mg/L)	150	98	0.024
Phosphorus, Total (mg/L)	193	18	0.041
Potassium (mg/L)	30	0	9.24
Sodium (mg/L)	30	0	111
Solids, Dissolved (mg/L)	44	0	522
Solids, Total Suspended (TSS) (mg/L)	80	12	7.73
Specific conductance (µS/cm)	515	0	845
Sulfate (SO4) (mg/L)	30	2	35.6

[1] Sample non-detects are not included in calculation of average concentration

Table 3.
Summary of Trace Element Samples for Willard Reservoir (1978 to 2007)

Parameter	Samples collected	Non-detect samples	Average concentration (µg/L) [2]
Aluminum	3	3	-
Arsenic	47	8[2]	2.60
Barium	44	15	31.4
Boron	13	0	141
Cadmium	45	39[2]	3.17
Chromium	44	30	9.44
Copper	45	25[2]	10.8
Iron	48	4	4.45
Lead	45	33[2]	11.3
Manganese	42	19	15.5
Mercury	45	38[2]	0.114
Nickel	37	29[3]	19.1
Selenium	45	42[2]	0.500
Silver	42	39[2]	5.00
Zinc	42	13[2]	15.4

Water quality standards in Utah are established to protect the designated beneficial uses of waters. Water quality in Willard Reservoir is considered good and no parameters exceed established state standards. The indicator threshold for total phosphorus concentrations of 0.025 mg/L is exceeded in the reservoir. This indicator does not directly impair water quality; it may be related to impairments by other parameters including low dissolved oxygen. Willard Reservoir, however, is not impaired for any of its designated beneficial uses (Utah's 2006 Integrated Report Volume I – 305(b) List of Impaired Waters).

Willard Reservoir is a polymictic lake, meaning it is shallow and may mix continuously. During calm periods in the summer the reservoir may thermally stratify into distinct layers of different temperatures, but only for brief periods of time. Other characteristics common to shallow lakes including high phosphorus and turbidity (Cooke, Welch, Peterson, & Nichols, 2005) are shared by Willard Reservoir as shown by average water quality concentrations for these parameters in Table 2.

[1] Since 1992, all samples have resulted in non-detection

[1] No samples collected since 1983

[2] Since 1992, all samples have resulted in non-detection
[3] No samples collected since 1983

Utah DWQ has employed Carlson's Trophic State Index (TSI) for lakes (Carlson, 1977) to track the conditions of lakes and reservoirs in Utah (Utah, 2006). A TSI provides an estimate of the condition of a lake or reservoir. The TSI for Willard Reservoir from 1991 through 2003, is shown in Figure 16. In general TSI values are grouped into four categories: TSI values less than 40 represent oligotrophic or low productivity, high clarity waters; TSI values between 40 and 50 represent mesotrophic or intermediate productivity waters; TSI values between 50 and 70 represent eutrophic or high productivity waters; TSI values greater than 70 represent hypereutrophic or extremely productive, nutrient rich waters. Since the mid-1990s, Willard Reservoir has consistently been a mesotrophic to eutrophic lake.

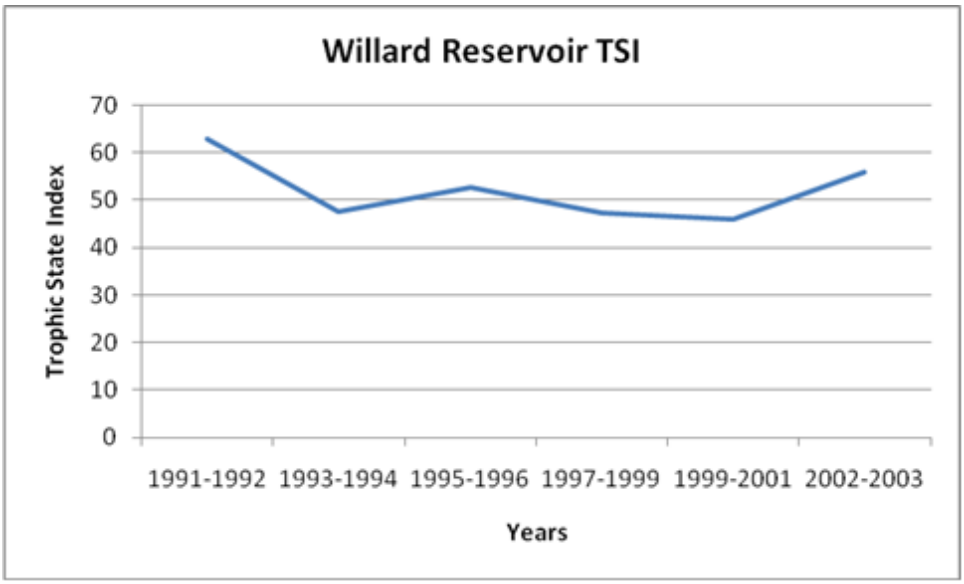

Figure 16. Willard Reservoir Trophic State Index, 1991-2003

3.2.5 System Operations (A.V. Watkins Dam, Willard Canal and Pumping Plant)

A.V. Watkins Dam is an off stream facility with a structural height of 36 feet. The dam is about 14.5 miles long in a rough rectangle, contains about 17 million cubic yards of material, and encloses a reservoir of 227,000 AF capacity, at elevation 4,226.0 feet. Its outlet works and overflow sill spillway are combined into one structure and located at the north end of the dam. The outlet works/spillway consists of an approach channel, a box intake at elevation 4,205.0 feet, a 7-by-7-feet upstream conduit, a gate structure containing two 84-by-84-inch manually operated slide gates, an overflow sill at elevation 4,226.0 feet located at the top of the gate shaft, a 7-by-9-feet downstream conduit, a stilling basin, and an outlet channel. The combined outlet works/spillway capacity is 1,121 cfs at water surface elevation 4,226.85 feet. There is no discharge channel capacity calculated for the dam, since discharges go directly into the Great Salt Lake.

The District operates A.V. Watkins Dam. The Weber Basin Project makes up a large portion of the water supply delivered by the District. The District water under contract totals 226,000 AF, which consists of roughly 136,000 AF for irrigation and 90,000 AF for M&I use. This water is delivered to lands along the upper Weber and Ogden River Valleys, as well as the eastern slopes and lower valley lands of Weber and Davis Counties. The District operates, either solely or jointly, seven reservoirs which store approximately 384,000 AF of the Weber Basin Project's water.

During early spring runoff, when irrigation demands are low, surplus high flows from the Weber River and the Ogden River are diverted to the Willard Canal by Slaterville Diversion Dam. Willard Canal can deliver up to 1,050 cfs from the diversion dam to the Plain City turnout, a privately owned irrigation system, and up to 950 cfs from the turnout to Willard Reservoir. Willard Canal carries the water over 9 miles by gravity flow to Willard Reservoir, where it is stored for future use. Willard Pumping Plants No. 1 and 2, located on the canal, are bypassed during this gravity flow operation.

The peak demands of the irrigation season are met by augmenting normal flows from the Weber and Ogden Rivers with water stored from Willard Reservoir. Willard Pumping Plant No. 1 pumps water from the Willard Intake Channel, located near A.V. Watkins Dam, and delivers it to the Willard Canal. Each of the three pump units has a capacity of 167 cfs, resulting in a total capacity of 500 cfs at Plant No. 1. In practice, only two pumps are run concurrently, constraining releases to a maximum of 335 cfs. A portion of this water is released through turnouts along the canal according to demands; the remaining water flows just over 8 miles to Willard Pumping Plant No. 2, where it is lifted and continues in the Willard Canal to Slaterville Diversion Dam and the Layton Pumping Plant Intake Channel. The combined capacities of the three pump units at Plant No. 2 amount to 300 cfs. The water is then pumped by the Layton Pumping Plant into the Layton Canal, which carries it another 9 miles south for distribution into laterals for irrigation of Weber Basin Project lands and M&I uses.

Willard Reservoir has a total capacity of 227,000 AF and an active capacity of 202,000 AF, according to the most recent (2009) bathymetric survey. The current top of active (TOA) storage elevation for Willard Reservoir is 4,226.0 feet, and the current top of dead (TOD) storage elevation is 4,205.0 feet. Reclamation maintains data records for Willard Reservoir, which includes daily pool elevation, storage, inflow, and releases. Elevation data is available for the period from 1986 to present. Note that this represents only a portion of the full operating period, which extends from 1969 to present. Figure 17 shows the Willard Reservoir pool elevation relative to the TOA and TOD elevations for the period of record.

Willard Reservoir has filled in 12 of the last 28 years. Most notably, it filled in eight consecutive years from 1993 to 2000. Since 2001, the reservoir has filled only four times (2004, 2009, 2010, and 2011). While 2007 was relatively dry, it should be noted that reservoir storage was constrained in 2007 and 2008 due to

construction activities. Storage in Willard Reservoir typically peaks between late May and early July. The reservoir has not been drawn down to dead pool elevation (4,205 feet) since 1986. The lowest observed pool elevation on record is 4,207.9 feet, or 2.9 feet above dead pool elevation.

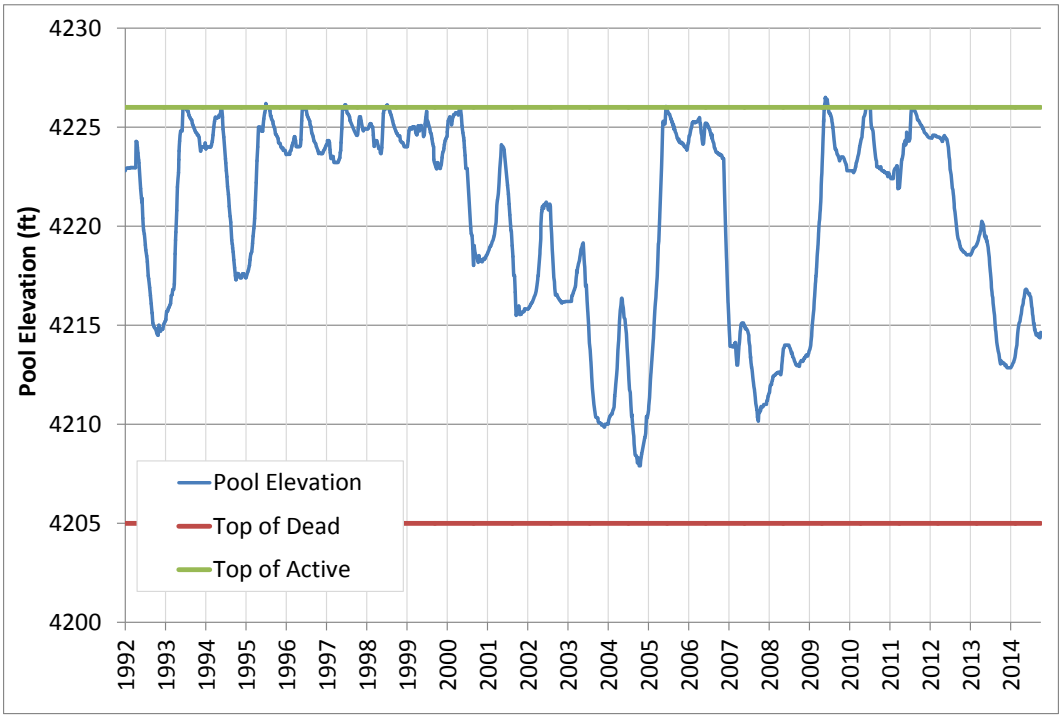

Figure 17. Historic observed Willard Reservoir pool elevation from WY 1992 to WY 2013.

3.2.6 Public Safety, Access, and Transportation

The dam and reservoir are accessed from Interstate 15, from the north at Exit 360, and from the south at Exit 354. Willard North Marina Road (SR-315) and Willard South Marina Road (SR-312), are both two lane paved roads that lead from the entrance to the north and South Marina, respectively, directly to the boat docks in each marina. The Utah Department of Transportation (UDOT) maintains these two roads. Other roads outside the Park are maintained by Box Elder County and Weber County. Most of the roads in the Park are maintained by State Parks.

3.2.7 Visual Resources

The Visual Management System developed by the Forest Service, uses distance zones, variety class, and sensitivity level to establish Visual Quality Objectives (VQOs) for various landscape types. VQOs for the areas within the project boundary are shown in the table below and represent existing visual quality in the area.

There are two VQOs at Willard Reservoir, Modification and Maximum Modification; both reflect the developed and modified nature of the landscape throughout the area.

The VQOs are as follows. Modification - development contrast appears dominant within the natural landscape when viewed up to 5 miles away. The time frame for complete rehabilitation to occur should not exceed 5 years beyond project completion. Maximum modification - development contrast appears dominant and out of character when viewed up to 5 miles away, it blends with the landscape when viewed beyond 5 miles. The time frame for complete rehabilitation to occur should not exceed 5 years beyond project completion.

Table 4
Visual Quality Objectives by Area

NORTH RECREATION AREA	
Willow Creek Campground	Modification
Cottonwood Day Use Area	Modification
Eagle Beach Day Use Area	Modification
Wiper Cove Day Use Area	Modification
Pelican Beach Day Use Area	Modification
North Recreation Area Marina (marina, slips, and boat parking)	Modification
Administration Area	Modification
Wildlife Management Natural Area	Modification
SOUTH RECREATION AREA	
Campground at South Recreation Area	Modification
South Recreation Area	Modification
South Recreation Area	Modification
Dike	Maximum Modification
Wildlife Management Natural Area	Modification

Visual integrity objectives serve as the base to monitor future visual changes associated with land and resource use.

3.2.8 Socioeconomics

A.V. Watkins Dam and Willard Reservoir provide substantial economic benefits to over 520,000 people in the Northern Wasatch Front (between the west slope of the Wasatch Mountains and the east shore of Great Salt Lake, in Davis, Morgan, Summit, and Weber Counties). Various high-mountain valleys in northern Utah rely on the capability of Willard Reservoir to deliver and/or exchange irrigation and M&I water. The amount of water delivered for M&I purposes has averaged about 22,679 AF from 2000 to 2007. In addition, 25,000 AF of M&I water in the reservoir is committed to satisfying an increase in projected water demand over the next 10 years.

The additional yield created by the proposed dam raise is not expected to be utilized until the 25,000 AF of current M&I supply is fully allocated and used. The benefits of the additional yield do not begin until approximately 2030 and may not be fully utilized until 2039, based on demand and supply forecasts provided from District and the State of Utah. The benefits derived from 2030 to 2060 are estimated at $358,092,000 in present worth terms.

For socioeconomic resource analyses, annual monetary values have been converted to present worth values using the 30-year T-bill Rate of 2.63 percent as of February 13, 2015, and a 50-year period of analysis from 2011 through 2060 and are stated in 2015 dollars.

3.2.9 Cultural Resources

Cultural resources are defined as physical or other expressions of human activity or occupation. Such resources include culturally significant landscapes, prehistoric and historic archaeological sites, as well as isolated artifacts or features, traditional cultural properties, Native American and other sacred places, and artifacts and documents of cultural and historic significance.

Section 106 of the NHPA of 1966, mandates that Reclamation take into account the potential effects of a proposed Federal undertaking on historic properties. Historic properties are defined as any prehistoric or historic district, site, building, structure or object included in, or eligible for, inclusion in the National Register of Historic Places (NRHP). Potential effects of the described alternatives on historic properties are the primary focus of this analysis.

The affected environment for cultural resources is identified as the Area of Potential Effects (APE), in compliance with the regulations to Section 106 of the NHPA (36 CFR 800.16). The APE is defined as the geographic area within which Federal actions may directly or indirectly cause alterations in the character or use of historic properties. The APE for the Proposed Action includes all areas associated with the Proposed Alternative within which construction activities have the potential to cause ground surface disturbance. Construction activities may include, but are not limited to, the proposed dam crest raise, the extension of

the boat ramp and reconfiguration of the boat ramp access road at the South Marina Campground, the construction of the berm, and raising of beach facilities at the North Marina Campground, the construction of a low-level outlet, the removal of the siphon near the southwest corner of the dam, the rehabilitation of the inlet/outlet channel, the installation of a toe drain system, and the use of borrow areas, access roads, and staging areas.

3.2.9.1 Cultural History

For over 10,000 years, humans have occupied the eastern Great Basin region of North America. The cultural history of the Great Basin is marked by spatial and temporal variation, likely a result of the sizeable geographic area comprising the region. According to Baker, et al. (1992), the key to understanding the cultural history of the Great Basin involves the recognition of the various microenvironments within the region and the associated variation in human adaptation. The marsh/wetland environment around Willard Reservoir represents one such microenvironment. Although the Great Basin exhibits significant variability in terms of its cultural history, chronologies of the region can still be identified. While Baker et al. present one such chronology, it was developed some time ago. Since 1992, there have been many new additions to our understanding of the prehistory of the region. So, while Baker et al. still is the primary source for local archaeological data, the brief summary of this specific chronology has been updated following Simm's (2008) and Grayson's (2011) modifications of time spans and cultural interactions in the review presented below.

<u>Paleo-Indian Period (>13,000-9000 B.P.)</u>

Archaeological evidence suggests human occupation of the eastern Great Basin began sometime prior to about 10,000 years ago. Paleo-Indian cultural manifestations in the region, although poorly understood, are generally characterized on the basis of unique diagnostic projectile point styles, such as the Western Stemmed Tradition, and fluted projectile point types such as Folsom and Clovis (Baker et al. 1992). No Paleo-Indian sites have been previously discovered within the APE, but a number of isolated surface finds dating from the period have been discovered in surrounding areas. The lack of Paleo-Indian sites in the APE is not surprising due to the very active hydrological and geophysical nature of the areas surrounding the Great Salt Lake. As a result of these processes, present sediments along the perimeter of the Great Salt Lake are relatively recent (Baker et al. 1992). Simms and Stuart specify, however, that early evidence of human occupation in this area is likely underrepresented rather than absent (in Fawcett and Simms 1993).

<u>Early Archaic Period (9000 to 7000 B.P.)</u>

The Early Archaic Period is generally characterized by the use of basketry, milling stones, and large side-notched projectile points like the Pinto and

Humboldt as well as those in the Northern and Elko series. Atlatls (spear-throwers), netting, hide moccasins, and fiber sandals are among the many artifacts common to the period (Baker et al. 1992). Evidence of human occupation associated with the Early Archaic Period has been discovered at a number of sites in the Great Salt Lake area. An absence of Early Archaic sites in upland areas around the Great Salt Lake led Madsen (1982) to propose the existence of relatively permanent, lake-edge, marsh adaptation during the period.

Middle Archaic Period (7000 to 3000 B.P.)

Changes in projectile point types and distributions mark the transition from the Early to Middle Archaic Periods. Sudden, Hawken, and Rocker Side-Notched points, as well as Gypsum, McKean Lanceolate, San Rafael, and Gate Cliff Split-Stem points began to appear, while other point types common in the eastern Great Basin started to spread to other areas in the region. Sites along lake edges continue to be occupied and an increase in use and occupation of upland resources in the Great Salt Lake area occur (Baker et al. 1992).

Late Archaic Period (3000 B.P. to 1000 B.P.)

The Late Archaic Period is marked by the abandonment of many lake-edge sites in the eastern Great Basin due to rising lake levels and a loss of marsh habitats and lake-periphery freshwater springs. Occupation of upland sites also appears to have increased (Baker et al. 1992).

Sevier/Fremont (Formative) Period (1600 B.P. to 650 B.P.)

The Formative Period in northern Utah is represented by the Fremont culture (Baker et al. 1992). The appearance of Fremont groups, however, did not mark a definitive end to the Archaic Periods. According to Baker et al., this period was likely slow to begin and spotty in nature (1992). As a result, peoples in some areas of the region continued to live an archaic lifestyle. During the Formative Period, variable lake levels continued to heavily impact lake-periphery environments in the eastern Great Basin. This period is also marked by the introduction of maize, the bow and arrow, and pottery. The introduction of the small Rose Spring Corner Notched and Eastgate projectile points and a horticulture-based subsistence strategy also characterize the period (Baker et al. 1992).

Paiute-Shoshoni (Late Prehistoric) Period (750 B.P. to Present)

The expansion of Numic speaking groups (Paiute and Shoshoni) into the eastern Great Basin led to the beginning of what Baker et al. (1992) define as the Late Prehistoric Period. Generalized subsistence, increased mobility, and smaller populations (compared to the Formative Period) characterize this period. Numerous sites in the Great Salt Lake area have evidence of both Late Prehistoric and Fremont occupation, suggesting to Madsen (1982) that the two groups had a high level of interaction and that they were likely occupying the area

contemporaneously. Simms et al. suggests these sites indicate a degree of continuity between Fremont and Late Prehistoric adaptive strategies (1990). Small side-notched projectile points and Promontory pottery are also present during this period.

The first European contact with Native Americans in the Great Basin occurred in 1776. In the Great Salt Lake area, contact came by way of the Dominguez-Escalante expedition. The Dominguez-Escalante groups observed and recorded detailed descriptions of the Native American groups they encountered. After the expedition, the Spanish made several visits to Utah to trade for horses, slaves, and gold (Baker et al. 1992). In 1805, the Lewis and Clark expedition also passed through Utah and, again, detailed accounts of Native American cultures were made. The first Mormon settlers arrived in the Salt Lake area in 1847. This marked the beginning of constant contact between the Mormon pioneers and the Native American groups in the area.

3.2.9.2 Cultural Resources Status

A draft report on the cultural resources of the project area has been received and is presently under review (Billat and Billat 2015). The report discusses the previously reported cultural resources in the vicinity of the project and adds one new site to the inventory. The sites are evaluated for their historic significance (36 CFR 800.4), following the criteria set out in the NHPA and defined in 36 CFR 60.4. Eight sites are located near the dam. The evaluation criteria are:

The quality of significance in American history, architecture, archeology, engineering, and culture is present in districts, sites, buildings, structures, and objects that possess integrity of location, design, setting, materials, workmanship, feeling, and association and:

A. are associated with events that have made a significant contribution to the broad patterns of our history; or

B. are associated with the lives of persons significant in our past; or

C. embody the distinctive characteristics of a type, period, or method of construction, or that represent the work of a master, or that possess high artistic values, or that represent a significant and distinguishable entity whose components may lack individual distinction; or

D. have yielded, or may be likely to yield, information important in prehistory or history.

Upon completion of the review and in compliance with 36 CFR 800.4(d) and 36 CFR 800.11(e), a copy of the cultural resource inventory report and an effect determination would be submitted to the Utah SHPO, Tribes which may attach religious or cultural significance to historic properties possibly affected by the Proposed Action for consultation. Should these consultations not reach

agreement the Advisory Council on Historic Preservation (ACHP) would then be asked to review the findings as outlined in 36 CFR 800.5 (c) (2).

3.2.10 Paleontological Resources

Following authorization of the Proposed Action, a paleontological file search would be conducted for the project APE by the Utah Geological Survey (UGS). The Paleontological Assistant with the UGS would be consulted regarding the potential for encountering previously documented and presently unknown paleontological resources in the vicinity of the project APE.

3.2.11 Wetlands and Vegetation

Plant communities within the area include the reservoir's perimeter which consists of littoral, wetland, and upland habitats. The Weber River provides water to the reservoir through the Willard Canal. The reservoir is an off-channel storage facility and does not release water to any stream or river system below it. Rather, water is released back to the Willard Canal by the use of two pumping plants.

Weeds, particularly Dyers Woad and other noxious or invasive weed species, are a problem in the area. Between the eastern shore and Interstate 15, weed control and replacement with native forage could provide pheasant habitat. Wetlands in this area are closed to vehicle traffic.

Soils

The easternmost portion of the project area is located within the Lasil-Fridlo association of somewhat poorly drained and moderately well drained, nearly level and gently sloping loams on broad low lake terraces and lake plains (Chadwick, 1975). The western parts of the project area are located on the Playas-Saltair Association, which consists of playas and poorly drained, nearly level silty clay loams on lake beds and broad plains. The soils were formed in highly stratified, calcareous, mixed alluvium derived mainly from limestone, sandstone and quartzite. Some of the soil types in this area are highly saline. Slopes range from 0 to 1 percent.

Habitat/Vegetation Types

There are six general habitat/vegetation types within the area. These types are discussed below.

Farmed Land Habitat Type

This vegetation type is generally underlain with Syracuse or Warm Springs fine sandy loam soil. The water table is between 24 and 40 inches below the surface. Syracuse soils are used for irrigated crops including alfalfa, small grains, sugar beets, tomatoes, and corn for silage as well as range. When abandoned, these

areas may revert to disturbed sites dominated by weedy plant species. These sites primarily occur northeast, south and east of the southern boat ramp.

Altered Land Habitat Type - Undeveloped

This habitat type has been altered by humans and is comprised of areas such as large dikes and grassy pasture. These highly disturbed areas are dominated by grasses and weedy species, including Kentucky bluegrass (*Poa pratensis*) (planted and irrigated), as well as cheatgrass (*Bromus tectorum*), Canada thistle (*Cirsium arvense*), and teasel (*Dipsacus sylvestris*). These sites primarily occur along the north and south borders of the reservoir.

Altered Land Habitat Type - Developed

This habitat type includes the developed portions of the property such as campgrounds, picnic areas, roads, beaches, and boat ramps. They are unvegetated or planted with non-native species such as Kentucky bluegrass. These sites occur within the Park areas located along the northeast and southeast borders of the reservoir.

Cottonwood/Willow Riparian Habitat Type

This habitat type comprises about 20 percent of the wetland types within the project area. In some places, trees have been planted for shade and are maintained by sprinklers. These areas are generally lower in elevation than the surrounding upland area and collect runoff during precipitation events, thereby providing the important function of water quality improvement (see Figure 24). The overstory is dominated by narrowleaf cottonwood (*Populus angustifolia*), coyote willow (*Salix exigua*), red-osier dogwood (*Cornus stolonifera*) and tamarisk (*Tamarix sp*.). Dominant vegetation associated with freshwater emergent wetland plant communities, which are found in ditches, along ponds and other waterways, and in isolated low spots, include Joe-pye weed (*Eupatoriadelphus maculatum*), hairy willowherb (*Epilobium ciliatum*), prostrate knotweed (*Polygonum aviculare*), cattails (*Typha spp.*), lady's thumb (*Polygonum persicaria*), common reed (*Phragmites australis*), reed canary-grass (*Phalaris arundinacea*), curly dock (*Rumex crispus*), rushes (*Juncus spp*.), red-osier dogwood (*Cornus stolonifera*), and coyote willow (*Salix exigua*). The largest wetland/riparian areas are located within the northern campground.

Open Water Habitat Type

These areas are generally unvegetated or sparsely vegetated with submerged vegetation. They occur within stream banks and inside borrow areas, ponds, and the reservoir area.

Salt Marsh/Mudflat Habitat Type

Salt marshes are interspersed with and landward of the mudflats located along the south side of Willard Reservoir. This area is currently managed by the Utah Division of Wildlife Resources (UDWR), as part of the Harold S. Crane Waterfowl Management Area. There are two other salt marsh sites, one located along the west side of the reservoir and one west of the North Recreation Area. Dominant vegetation associated with salt marsh communities include Olney's threesquare (*Scirpus americanus*), hardstem bulrush (*Scirpus acutus*), cattail (*Typha spp*.), lady's thumb (*Polygonum persicaria*), salt grass (*Distichlis spicata*), tamarisk (*Tamarix spp*.), and common reed (*Phragmites australis*). The salt marsh and associated mudflats comprise over 80 percent of the wetlands in the Willard Reservoir boundary. Soils in the mudflats are of the Saltair and Refuge Series, which are poorly drained soils with slow to moderate permeability. Mudflats have little or no vegetation growing on them.

The Bear River Migratory Bird Refuge

This refuge is located just north of the reservoir. It is over 74,000 acres of marsh, open water, uplands, and alkali mudflats. The marshes and open water are managed using a complex system of dikes and water control structures that provide variable water depths suitable for a variety of water bird species throughout the year. The refuge provides important habitat for migrating birds from both the Pacific and the Central Flyways of North America.

Most of the uplands are dominated by grasses such as wheat and salt grasses, with iodinebush and greasewood scattered across the landscape. The grasslands are managed with prescribed grazing. The uplands also have scattered knolls that support a wheatgrass, saltbush, and greasewood plant community. These knolls are a unique ecological community in the Bear River delta.

Ogden Bay Waterfowl Management Area

The Ogden Bay WMA receives water that is stored in Willard Reservoir. Weber River water is diverted through the Willard Canal, stored in Willard Reservoir, and released to maintain flows in the Ogden Bay WMA. Several MOAs between Reclamation and the UDWR provide Weber Basin Project water to maintain freshwater flows into the Ogden Bay WMA and the Harold S. Crane Waterfowl Management Area.

Wetland Areas

The Cottonwood/Willow Riparian Habitat, Open Water Habitat, and the Salt Marsh/Mudflat Habitat represent potential jurisdictional wetland areas which are regulated by the USACE, under Section 404 of the CWA (see Figure 24). These areas are called Waters of the United States and include lakes, streams, rivers, ponds, playas, mudflats, and wetlands. The CWA sets forth a goal of restoring and maintaining existing aquatic resources in the United States. To achieve the goal of no overall net loss of wetland functions and values, the USACE requires

the avoidance and minimization of adverse impacts and requires the offset of unavoidable adverse impacts to existing aquatic resources through mitigation.

Reservoir Habitat

Much of the perimeter of the reservoir consists of upland vegetation, predominately sagebrush, as well as rocky or bare ground. Other sections of the reservoir's shoreline consist of littoral cottonwood and willow habitats. This habitat varies from approximately 50 to several hundred feet in width and length and consists mostly of young willow (*Salix spp),* some Nebraska sedge *(Carex nebrascensis*), and in places an overstory of narrow leaf cottonwood (*Populus angustifolia*). These habitats occur mainly along areas developed for camping and shoreline recreation. These habitats likely require lake levels that approach or inundate them periodically to ensure a vigorous and healthy vegetative community.

Exposed reservoir bottom (during seasonally low reservoir levels) consists of muddy and rocky substrates depending on the topography of the exposed shoreline.

All proposed construction areas around the reservoir have been previously disturbed by road, reservoir, and recreation (e.g. campsites) construction and maintenance activities. Riprap has been placed in areas of erosion that threaten Park infrastructure/facilities and the dam embankment itself.

Big sagebrush (*Artemisia tridentata*), Smooth brome (*Bromus inermus*), timothy (*Phleum pratense*), as well as several other introduced and native grass species (mostly wheat grasses), exist above the reservoir's ordinary high water elevation. Canada thistle (*Cirsium arvense*) has invaded the area in small patches.

Upland Habitat

Both nonnative and native species of vegetation are found within the project area in habitats around the reservoir. Upland habitat consists mainly of big sagebrush (*Artemisia tridentata*), and rabbitbrush (*Chrysothamnus* spp.). Other species present include yellow sweet clover (*Melilotus officinalis*), houndstongue (*Cynoglossum officinale*), broom snakeweed (*Gutierrezia sarothrae*), golden currant (*Ribes aureum*), wild rose (*Rosa woodsii*), basin wildrye (*Elymus cinereus*), Rocky Mountain aster (*Aster adscendens*), and curlycup gumweed (*Grindelia squarrosa*). Crested wheatgrass (*Agropyron cristatum*) has been seeded in previously disturbed areas.

3.2.12 Wildlife Resources

Wildlife resources within the general area of the project include fish, big game, small mammals, raptors, water birds, and upland game birds, with a variety of other birds, reptiles, and amphibians.

Wildlife Management

To mitigate for waterfowl habitat loss associated with the development of Willard Reservoir, Reclamation acquired and developed approximately 1,800 acres of state owned land located west of the reservoir. Dikes, and a delivery canal with inlet structures, were constructed to create ponds that could be managed as marshes. Management responsibility for these lands, known as the Willard Waterfowl Management Area, were transferred to the UDWR in 1963. The name has since been changed to the Harold S. Crane Waterfowl Management Area and the size has been expanded to encompass over 11,000 acres. An agreement is in place with UDWR, that retains access and operations rights across these lands as necessary for Reclamation to complete activities associated with the Weber Basin Project (MOA Contract No. 14-06-400-2871 1963).

In 1973, Reclamation entered into an agreement (MOA, Contract No. 14-06-400-5925 1973) with UDWR to transfer wildlife administration and development responsibilities for lands located to the south of the reservoir. The area is known as the Willard Bay Wildlife Management Area. An updated agreement for management of the area was implemented in 1980 (MOA, Contract No. 0-07-40-4478) for a 10-year term. In 1987, this agreement was supplemented (MOA, Contract No. 06-07-L1450) to include management of an additional 100 acres adjacent to the South Marina. In 1991, a new agreement was drafted but never signed.

The Harold S. Crane Wildlife Management Area now encompasses almost 2,000 acres and is managed primarily for the benefit of upland species, with emphasis placed on the ring-necked pheasant. The area contains a mix of upland and wetland habitats, ranging from agricultural land to mudflats. Management activities that have been implemented by UDWR to improve pheasant habitat include; planting food plots, cooperative farming (Contract No. 3-07-40-L1410), supplemental feeding in winter, planting nesting cover, establishment of shrub rows, predator control, and limited irrigation. UDWR is responsible for maintaining roads, fences, and habitat. Reclamation reserved access and operations rights as necessary for operation of the Weber Basin Project (Reclamation 1997). Recreational use of the area includes hunting, fishing, dog training, bird watching, and trapping.

In the past, beavers (*Castor canadensis*) have damaged some of the trees within the Park. When this occurs, the offending animal is removed.

Fish

Willard Reservoir supports a valuable fishery resource. It has traditionally provided game fish of desirable quantity and size for both boat and shore anglers. These fish species are able to survive within normal fluctuations of the reservoir's water surface elevation. There is little natural habitat structure within the

reservoir for warm water fish species. Walleye need structure for cover, such as rock.

At maximum capacity the surface area is 10,000 acres, maximum depth is 30 feet and 215,000 AF of water is stored. The bottom is flat, fairly uniform, and composed primarily of sand and silt.

Willard Reservoir is eutrophic in nature. Very little thermal stratification occurs in the summer due to the occurrence of periodic storms that create surface waves and mixing with bottom sediments. This mixing action results in increased turbidity and reduced light transparency, thus restricting development of emergent or submergent vegetation to the more sheltered areas of the reservoir. Surface ice generally forms by December and disappears by March.

The UDWR conducted an ecological survey of water quality in the reservoir. Summertime water temperatures were found to vary between 75 and 80 degrees Fahrenheit. Dissolved oxygen content was at or near saturation at all times and the pH was slightly alkaline. Physical and chemical parameters within the reservoir are best suited for a warm water fishery.

The UDWR manages the fishery resource in Willard Reservoir. The UDWR began stocking largemouth bass (*Micropterus salmoides*), walleye (*Stizostedion vitreum*), channel catfish (*Ictaluras punctatus*), white bass (*Morone chrysops*), and fathead minnow (*Perca flavescens*) in Willard Reservoir in 1965. Black crappie (*Pomoxis nigromaculatus*) were illegally stocked by anglers shortly after the reservoir was completed. The wiper, a hybrid between striped bass and white bass, are also stocked in the reservoir by the UDWR.

Because water for Willard Reservoir is diverted from the Ogden and Weber Rivers and Willard Creek, fish species present in the reservoir reflects what exists in those streams and what once existed in ponds flooded by the reservoir. Other fish species that have been known to occur in the reservoir include: brown trout (*Salmo trutta*), black bullhead (*Ictalurus melas*), bluegill (*Lepomis macrochirus*), carp (*Cyprinus carpio*), cutthroat trout (*Salmo clarki*), Delta smelt (*Hpomesus transpacificus*), green sunfish (*Lepomis cyanellus*), mottled sculpin (Cottus *bairdi*), rainbow trout (*Salmo gairdneri*), mosquitofish (*Gambusia affinis*), redside shiner (*Richardsonius balteatus*), Utah chub (*Gila atraria*), Utah sucker (*Catostomus ardens*), emerald shiner (*Notropis atherinordes*), fathead minnow (*Pimephales promelas*), log perch (*Percina caprodes*), pond smelt (*Hypomesus olidus*), sand shiner (*Notropis stramineus*), and spottail shiner (*Notropis hudsonius*). Most of these species have been unsuccessful in establishing and maintaining a viable population within the reservoir due to lack of structure, water temperatures, and turbid conditions.

Throughout the history of Willard Reservoir, the sport fishery has experienced up and down cycles. These cycles appear to coincide with introductions of forage fishes which improve fishing temporarily until the forage population is suppressed

by predation and the fishery declines. The reservoir has experienced several drawdowns in the past that exposed much of the dike riprap, which provides shoreline cover for both forage species and young-of-the-year game fish thus making them more vulnerable to predation. Coordination between UDWR and the District, prior to making seasonal reservoir changes could minimize impacts and possibly benefit reservoir fish populations.

In the past, fish attractors (tire reefs, Christmas tree bundles) were placed in the reservoir basin to provide additional cover for small fish and improve angler success. Most of the trees have since decomposed. Tires still remain in the reservoir. Placement of structures within Reclamation reservoirs for the purpose of creating fish habitat has recently become a topic of concern. There is potential for fish habitat structures to interfere with operation and maintenance and present a hazard to boaters.

Shipman (1977) conducted a study of the utilization of natural and artificial spawning habitat by channel catfish in Willard Reservoir. Types of spawning habitat evaluated consisted of dike riprap, milk cans, plastic trash cans, and automobile tires. Utilization of the artificial structures by spawning catfish was low, however, it was concluded that adequate channel catfish spawning habitat is provided by the existing riprap dike that surrounds the reservoir.

Spottail shiners were stocked in 1981, 1982, and 1983 to improve the forage base for walleye and black crappie. In 1982, Delta smelt were also stocked. Only short-term benefits were realized from introduction of the spottail shiner and Delta smelt and their establishment of a self-sustaining forage base was unsuccessful (Sommerfeldt 1984).

In 1990, UDWR introduced the gizzard shad (*Dorosoma cepedianum*) into Willard Reservoir in an attempt to provide forage and boost the walleye/channel catfish sport fishery (UDWR 1990). This introduction was done on an experimental basis due to concerns over possible transfer of gizzard shad into other Utah waters. Current fishing regulations prohibit possession of gizzard shad. Results of gizzard shad introductions indicate that they are being utilized by predator fishes and growth rates have increased.

In 1993, a hybrid between a white bass and a striped bass better known as wipers or palmetto bass (*Morone chrysops x saxatilis*) were introduced to utilize the additional forage provided by gizzard shad and exploit the under-utilized pelagic habitat within the reservoir. Preliminary results of this introduction, confirms that the wipers are utilizing the abundant forage and are growing at a rapid rate. The establishment of a wiper fishery has been popular with reservoir anglers.

<u>Mammals</u>

Mammals observed on lands within the reservoir area boundary include: cottontail rabbit (*Sylvilagus audubonii*), jackrabbit (*Lepus spp*.), raccoon

(*Procyon lotor*), red fox (*Vulves fulva*), striped skunk (*Mephitis mephitis*), muskrat (*Ondatra zibethicus*), long-tailed weasel (*Mustela frenata*), and yellow-bellied marmot *(Marmota plaviventris*). Other mammals within the area include: badger (*Tasidea taxus*), meadow vole (*Microtus montanus*), northern pocket gopher (*Thomomys talpoides*), deer mouse (*Peromyscus maniculatus*), porcupine *(Erethizon dorsatum*), Uinta ground squirrel (*Spermophilus armatus*), and various species of voles (*Microtus spp.*), and bats (*e.g. Myotis spp.*). Furbearers such as beaver and muskrat (*Ondatra zibethicus*) use the wetland and riparian habitat around the reservoir.

Big Game

The flatland and foothills surrounding the reservoir are covered mostly with sagebrush and grassland communities. This area provides big game habitat for both summer and winter use for deer (*Odocoileus hemionus*). Coyote (*Canis latrans*) are also present in the area.

Raptors

Raptors, such as the northern harrier (*Circus cyaneus*), and the red-tailed hawk (*Buteo jamaicensis*) are also observed by visitors to the area. In the winter months, bald eagles (*Halioeetus leucocephalus*), delisted under the ESA, congregate in trees around the shoreline of the lake near the North Recreation Area. Other raptors found in the area are great horned owl (*Bubo virginianus*), golden eagles (*Aquila chrysaetos*), American kestrel (*Falco sparverius*), barn owl (*Tyto alba*), and turkey vulture (*Cathartes aura*). Peregrine falcons (*Falco peregrinus*) utilize nesting towers on the nearby shores of the Great Salt Lake.

Water Birds

Numerous waterbirds occur in the project area such as waterfowl, shore birds, and other wading birds typically associated with wetlands and open water. The reservoir provides high quality habitat for waterbirds due to the areas of emergent vegetation around the reservoir. These areas provide important forage and cover for waterfowl and wading birds.

The abundance of birds within the area is due to its proximity to the Pacific flyway and nearby waterfowl management areas. Located to the north of the reservoir is the Bear River Migratory Bird Refuge, to the west is the Harold S. Crane Waterfowl Management Area and the Great Salt Lake, and to the south is the Ogden Bay WMA. The Ogden Bay WMA receives water that is stored in Willard Reservoir.

Weber River water is diverted through the Willard Canal, stored in Willard Reservoir, and released to maintain flows in the Ogden Bay WMA. Most of the managed upland wildlife habitat within the area is located on lands to the south of the reservoir.

Willard Reservoir and adjacent wetlands, serve as an important migratory stopover habitat for birds in the fall and spring. Emergent vegetation around the reservoir provides nesting habitat for a variety of waterfowl from mid-March to mid-July. Brood rearing begins mid-July to mid-August. Mud flats exposed in late summer and fall provide foraging areas for shore and wading birds.

Waterbirds commonly observed include the pied-billed grebe (*Podilymbus podiceps*), eared grebe (*Podiceps caspicus*), western grebe (*Aechnophorus occidentalis*), gadwall (*Anas strepera*), mallard (*Anas platyrhynchos*), cinnamon teal (*Anas cyanoptera*), northern shoveler (*Spatula clypeata*), lesser scaup (*Aythay affinis*), green-winged teal (*Anas carolinensis*), northern pintail (*Anas acuta*), common loon (*Gavia immer*), American white pelican (*Pelecanus erythrorhynchos*), double crested cormorant (*Phalacrocorax auritus)*, American coot (*Fulica Americana*), ring billed gull (*Larus delawarensis*), California gull (*Larus californicus*), great blue heron (*Ardea herodias*), double crested cormorant *(Phalacrocorax auritus),* killdeer (*Charadrius vociferous*), and Canada goose (*Branta canadensis*).

Snowy plover (*Charadrius alexandrinus*) is a shorebird that nests on the alkaline flats surrounding the Great Salt Lake and has been observed nesting near the western side of A.V. Watkins Dam. Nesting usually occurs from mid-March through late summer. Populations of this bird that breed along the Pacific Coast have been listed as threatened under the ESA. Populations in Utah have not been listed.

Upland Game Birds

Upland game birds occurring in the area include the ring-necked pheasant *(Phasianus colchicus*), mourning dove (*Zenaida macroura*), and California quail (*Lophortyx californicus*).

Other Birds

Besides waterbirds, the reservoir and associated wetland and upland habitat within the area boundary are utilized by many other types of birds. The most common birds at Willard Reservoir are songbirds. Western kingbirds (*Tyrannus verticalis*), several species of sparrows are among the various species of songbirds that use the riparian and wetland habitat.

Corvids, including jays (*Cyanocitta spp.*), the black-billed magpie (*Pica pica*), and the common raven (*Corvus corax*), are common. Tree swallow (*Tachycineta bicolor*), violet-green swallow (*Tachycineta thalassia*), northern rough-winged swallow (*Stelgidopteryx serripennis*), and cliff swallows (*Hirundo pyrrhonota*) all occur within the area. In open, shrub-dominated habitats goldfinch (*Carduelis tristis*), western meadowlark (*Sturnella neglecta*), common nighthawk (*Chordeiles minor*) sage thrasher (*Oreoscoptes montanus*), green-tailed towhee (*Pipilo chlorurus*), and rufous-sided towhee (*P. erythrophthalmus*) occur.

Reptiles and Amphibians

Reptiles and amphibians with potential to occur in the project area include the tiger salamander (*Ambystoma tigrinum*), boreal chorus frog (*Pseudacris triseriata*), great plains toad (*Bufo cognatus*), northern leopard frog (*Rana pipiens*), Great Basin gopher snake (*Pituophis melanoleucus deserticola*), and the Great Basin rattlesnake (*Crotalus viridis*), wandering garter snake (*Thamnophis elegans*), great basin skink (*Eumeces skiltonianus*), and short-horned lizard (*Phrynosoma douglassii*). Historically, boreal toad (*Bufo boreas*) and Columbia spotted frog (*Rana lutieventris*) may have occurred in the area but have not been documented within the project area.

3.2.13 Threatened, Endangered, Candidate, Proposed, and Sensitive Species

Federal agencies are required to ensure that any action Federally authorized or funded would not adversely affect a Federally listed threatened or endangered species. Several species listed as threatened or endangered occur within Box Elder and Weber Counties.

Canada lynx (*Lynx canadensis*) (threatened) historically occurred in the mountains above the reservoir but do not occur there or within the project area currently. The Western yellow-billed cuckoo (*Coccyzus americanus occidentalis*) (threatened) is not known to occur in the area, but there may be marginal habitat during the breeding season. In addition, the Greater sage-grouse (*Centrocercus urophasianus*) is a candidate species and does not occur within the project area.

The State of Utah maintains a list of sensitive species (species of special concern). These species that may occur within the project area and are managed under conservation agreements include: Bonneville cutthroat trout (*Oncorhynchus clarkii utah*), northern goshawk (*Accipiter gentilis*), and bluehead sucker (*Catostomus discobolus*). Other state sensitive species include American white pelican (*Pelecanus erythrorhynchos*), bald eagle (*Haliaeetus leucocephalus*), bobolink (*Dolichonyx oryzivorus*), burrowing owl (*Athene cunicularia*), California floater (*Anodonta californiensis*), Columbia spotted frog (*Rana luteiventris*), Deseret mountainsnail (*Oreohelix peripherica*), ferruginous hawk (*Buteo regalis*), grasshopper sparrow (*Ammodramus savannarum*), gray wolf (*Canis lupus*), Great plains toad (*Bufo cognatus*), greater sage-grouse (*Centrocercus urophasianus*), june sucker (*Chasmistes liorus*), kit fox (*Vulpes marcrotis*), Lahontan cutthroat trout (*Oncorhynchus clarkia henshawii*), least chub (*Iotichthys phlegethontis*), Lewis's woodpecker (*Melanerpes lewis*), long-billed curlew (*Numenius americanus*), lyrate mountainsnail (*Oreohelix haydeni*), mountain plover (*Charadrius montanus*), Northern goshawk (*Accipiter gentilis*), Northwest Bonneville pyrg (*Pyrgulopsis variegata*), Preble's shrew (*Sorex preblei*), pygmy rabbit (*Brachylagus idahoensis*), sharp-tailed grouse (*Tympanuchus phasianellus*), short-eared owl (*Asio flammeus*), smooth greensnake (*Opheodrys vernalis*), Townsend's big-eared bat (*Corynorhinus*

townsendii), Utah physa (*Physella utahensis*), western pearlshell (*Margaritifera falcata*), western toad (*Bufo boreas*), yellow-billed cuckoo (*Coccyzus americanus*), and Yellowstone cutthroat trout (*Oncorhynchus clarkia boubieri*).

Bald eagles roost in the North Recreation Area during winter, attracted, at times by a supply of winter-killed gizzard shad in the reservoir. Migration of bald eagles from breeding areas generally takes place between September and December. These eagles use cottonwood trees and snags near open water as winter roosting sites. These areas would be protected from construction activities through implementation of the Utah raptor guidelines (Romin and Muck 2002). The buffers and time limit restrictions associated with each species would be in place to minimize adverse effects.

3.3 Environmental Effects of Alternatives

Analysis of the effects of both the No Action and the Proposed Action Alternative in this EA, include raising the crest elevation of the dam and activities associated with this raise (e.g. temporary road improvement). Most construction activities would occur on previously disturbed lands. Water elevation in the reservoir would need to be restricted to an elevation of 4,210 feet during construction of the low water intake.

3.3.1 Recreation

3.3.1.1 No Action Alternative

The No Action Alternative would result in no impacts to recreation.

3.3.1.2 Proposed Action

Under the Proposed Action Alternative there would be some temporary impacts to recreation. Most impacts would occur to a few campsites with adjacent mature trees that are closely located along the drainages that feed the reservoir. Impacts are expected along the beach where the dike or swell is sited below the tree-line. The affected trees provide shade for wildlife habitat and an attractive setting for picnics and camping.

During construction, noise and congestion of traffic and construction equipment would have impacts on recreation. These impacts would mainly affect the North Recreation Area. The impacts to the recreation areas would be in the Willow Creek Campground, Eagle Beach, Wiper Cove, and the boat ramp/marina areas.

The impact to the Willow Creek Campground would include campsites along the water's edge from inundation. The surface would need to be raised to an elevation safe for campers. In addition to the sites being covered with water the adjacent trees could also be inundated and killed leaving a less desirable camping experience and a loss of wildlife habitat. For safe crossing of Willard Creek, the

bridge would need to be raised. The foot bridge in between Willow Creek Campground and Cottonwood Campground would also need to be raised.

If closure of the North Recreation Area is necessary during construction, use of the North Recreation Area would be unavailable. To mitigate losses to State Parks the South Recreation Area could be left open as to not totally restrict the use of the Park.

The impacts to Eagle Beach and Day Use Area would be moderate. Due to the higher water level the amount of beach usable would be reduced during the high water seasons. The sidewalk at the north end of the beach would be covered by water and would need to be raised. The path that leads from the Cottonwood campground would also need to be raised to prevent erosion to the path.

The higher water elevation would have impacts to the boat ramp/marina at Wiper Cove. The north dike would need to be raised. Riprap would be built up above the high water line to dissipate the energy of wave action on the pier. ADA access to the boat ramps would need to be lengthened and boat docks would need to be lengthened. Trees along the north dike and on both sides of the boat ramp would be impacted by the water levels. The trees are used for shade when fishing and while prepping boats for launch. They could be inundated and eventually killed if submersed in water for too long. Trees would take many years to reestablish.

Due to the higher water levels, the parking lot on the west side of the marina would need to be protected as well as the dike west of the marina. To protect the parking lot, sheet piles with a concrete cap would be installed to stop the wave action. The dike would be raised with riprap to protect it from wave action and erosion. Trees on the west dike would also be removed to install riprap and others would be inundated with water. This would reduce the quality of fishing access because of lack of shade during the warmer months. Trees would be planted to minimize the impacts.

The impacts to Pelican Beach and Day Use Area would be minimal. Due to the higher water level the amount of usable beach would be less. The sidewalk at the north end of the beach would be covered by water and would need to be raised.

According to the Willard Reservoir Resource Management Plan (Reclamation RMP 2000), State Parks is to "Allow highly developed recreation facilities mostly designed for comfort and convenience of the users. Development may be formalized and architecture may be contemporary. The facilities may include drinking water, flush toilets, and electricity. Allow the use of synthetic materials. Encourage the use of formal walks and surfaced trails to protect natural resources." Under this direction, recreation at the North Recreation Area should be enhanced to stimulate the users experience at the Park.

Restrictions on Park use during construction will be minimized as much as possible. Under a worst case scenario the Park would have to be closed for one season during construction. A 2011 survey completed by groups and individuals recreating at Hyrum State Park, a neighboring park with similar conditions in the State of Utah, indicated that the average dollars spent per visitation day at the Park was $13.84 ($15.29 indexed to 2014 dollars). Based on a 10 year average of 279,140 visitation days per year at Willard Bay State Park, the annual economic benefit of recreation in the area equals $4,268,050.60 (279,140 X $15.29). Using a multiplier of 1.45 (Burr and Jakus, 2014), the annual economic benefit of recreation to the area (within a 30 mile radius of the reservoir) is approximately $6,188,673.37. Depending on the timing and duration of construction and its result on the ability of visitors to recreate in the reservoir, the economic negative effect of construction activities could range from near $0 to over $6 million dollars for the one season of construction.

3.3.2 Water Rights

3.3.2.1 No Action Alternative

The No Action Alternative would not change the existing storage capacity of Willard Reservoir. Therefore, there would be no impacts to other water rights within the Weber River and Ogden River Basin.

3.3.2.2 Proposed Action

The Proposed Action Alternative should not impact other Weber River or Ogden River water rights. This is primarily due to Water Right Nos. 35-831 and 29-882, relatively junior priority date of October 8, 1955. There are no other large Weber or Ogden rivers water rights that are junior to Willard Reservoir water rights that are not held by Reclamation or the District. Therefore, increased diversions into Willard Reservoir would not cause other large water rights to be shut off. Typically, Willard Reservoir can only capture the non-irrigation season and high spring runoff flows of the Weber and Ogden Rivers, when all the senior water rights are fully satisfied.

Secondarily, interference between Water Right Nos. 35-831 and 29-882, and downstream water rights, is unlikely because of the location of the Slaterville Diversion Dam. There are very few water rights located downstream of this diversion dam. The most significant downstream right is located at the Ogden Bay WMA, where the Weber River empties into the Great Salt Lake. The water needs of the wildlife refuge are already protected through a contract between Reclamation and the Utah Department of Fish and Game, dated April 18, 1967. This agreement specifies minimum flows into the Ogden Bay WMA, and requires the Weber Basin Project meet these flows with either natural stream flows or stored project water.

3.3.3 Water Resources

3.3.3.1 No Action Alternative

Under the No Action Alternative, Reclamation would not raise the crest of the dam's embankment and therefore the capacity of the reservoir would not be increased. Current operations of the reservoir, which are subject to the physical constraints of the existing storage and conveyance systems and to the water rights agreements described in previous sections, would continue.

According to District records, increased future demands may result in water shortages by the year 2030. It is anticipated that even under the No Action Alternative, the District may more heavily utilize surplus Weber River flows in the future. The District would continue to meet minimum flow requirements in the lower Weber River, as dictated by the 1967 agreement between Reclamation and the Utah Department of Fish and Game. Given historic hydrology and historic demands, Figure 18 shows simulated flows in the Weber River at Plain City, where the District maximized its use of surplus flows in the Weber River to fill the reservoir. While the results suggest a potential reduction in winter and spring flows, the timing and magnitude of the simulated flows are largely unchanged relative to recent historic observations.

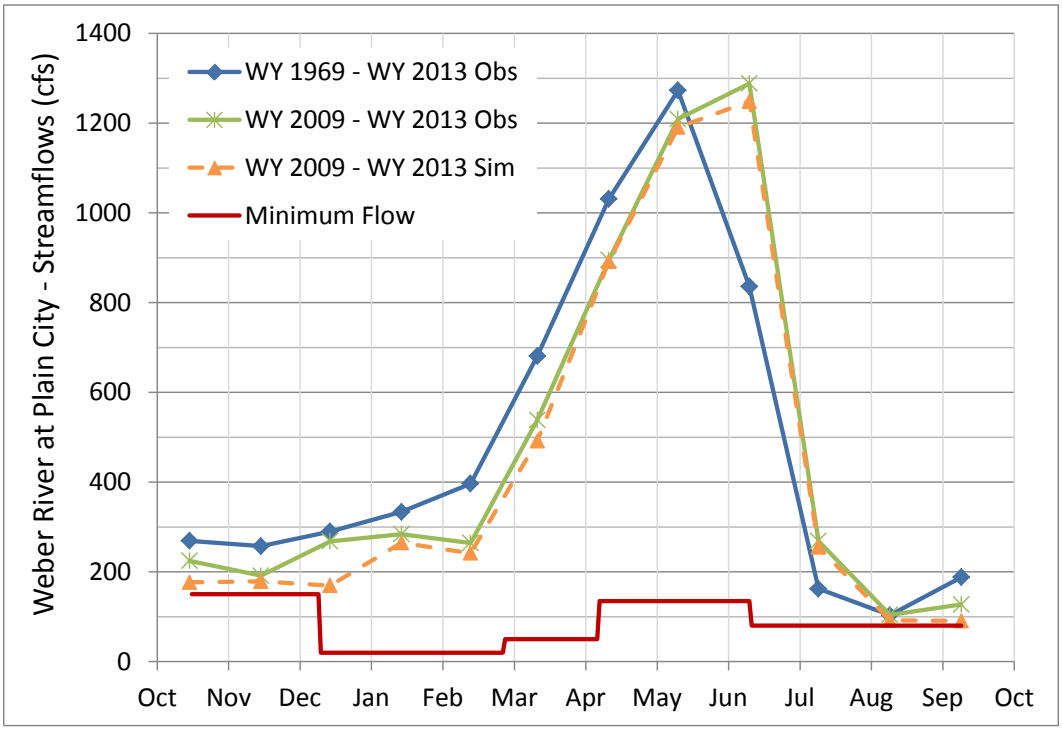

Figure 18. Comparison of observed to simulated Weber River flows at Plain City, Utah. Simulated flows are calculated based on increased diversion of available surplus Weber River flows to Willard Reservoir. Simulation inputs include historic hydrology, historic demand, and current storage and conveyance system capacities.

3.3.3.2 Proposed Action

Under the Proposed Action Alternative, Reclamation would raise the crest of the dam's embankment in order to increase the capacity of the reservoir. Current operations of the reservoir would continue. These operations would be subject to the physical constraints of the proposed storage system and existing conveyance system, and to the water rights agreements described in previous sections. Specifically, the peak rate of diversion from the Weber River would continue to be constrained by the capacity of the Willard Canal, and would not be expected to increase. However, relative to historic conditions, diversions may continue for a longer duration in order to fill the expanded reservoir, assuming availability of surplus Weber River flows.

It is anticipated that under the Proposed Action Alternative, the District would more heavily utilize surplus Weber River flows in the future. The District would continue to meet minimum flow requirements in the lower Weber River, as dictated by the 1967 Agreement, between Reclamation and the Utah Department of Fish and Game. Given historic hydrology and historic demands, Figure 19 and 20 shows simulated flows in the Weber River at Plain City, were the District to maximize its use of surplus flows in the Weber River to fill the expanded reservoir. The results suggest a potential reduction in winter and spring flows under the Proposed Action Alternative. The timing and magnitude of peak flows would be largely unchanged relative to recent historic observations. Minimum downstream flow requirements in the Weber River, as established by the Reclamation and USFWS, would be maintained year-round.

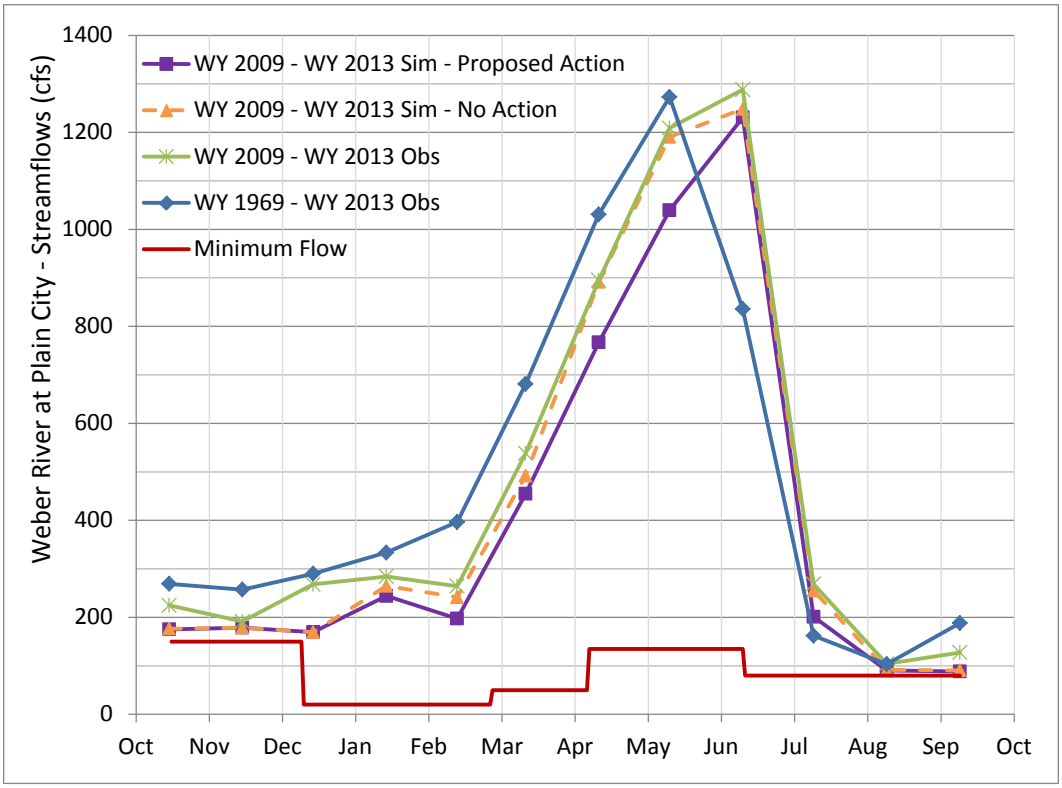

Figure 19. Comparison of observed and simulated Weber River streamflows at Plain City, Utah. Relative to historic observations and the No Action alternative, the Proposed Action Alternative could result in lower winter and spring flows, without encroaching on minimum flow requirements.

3.3.4 Water Quality

3.3.4.1 No Action Alternative

Since no construction would occur, there would be no construction-related water quality impacts.

Under the No Action Alternative current operations of the reservoir would be similar to historic operations and there would be no effects on water quality.

3.3.4.2 Proposed Action

Environmental effects of Proposed Action on water quality would include short-term effects from construction and permanent effects of increased storage. Construction-related water quality impacts could result from raising the crest of the dike and from dredging of the inlet/outlet channel and other areas in the reservoir basin. Water quality effects from construction-related activities would be short-term and could be minimized by implementing appropriate Best Management Practices. Impacts from dredging would also be short-term, limited to the inlet/outlet channel, and would not be expected to result in significant effects to water quality at Willard Bay.

Potential changes to thermal stratification and mixing of Willard Reservoir as a result of increasing the reservoir depth, were determined to be the primary indicators of effects on water quality. Effects to thermal stratification and mixing could lead to effects on dissolved oxygen levels, nutrient recycling, and possibly trace element availability. Determining potential changes to Willard Reservoir was approached by comparing thermal stratification of the No Action and Proposed Action using a CE-QUAL-W2 model of the reservoir. CE-QUAL-W2 is a two-dimensional hydrodynamic and water quality model (Cole & Wells, 2003). It was used to simulate thermal stratification in the No Action Alternative and Proposed Action, respectively.

Each water quality model simulated the operations of Willard Reservoir for the period 1992 to 2009, as determined by the hydrological modeling. The No Action water quality model results represented baseline conditions to which the Proposed Action model results were compared. These comparisons formed the basis for determining water quality effects resulting from the Proposed Action. Temperature, or specifically thermal stratification, was the comparison parameter used to determine effects, if any. Models results from two separate years, 2003 and 2005, which illustrate different hydrological and reservoir storage conditions,

are discussed. Figure 20 displays temperature profile results for the year 2003, a relatively dry hydrologic year. Figure 21 displays temperature profile results for the year 2005, a relatively wet hydrologic year. In each graph results from the No Action simulation are displayed as solids lines and results from Proposed Action are displayed as dotted lines. Results from each simulation for the same date are displayed using the same color.

The initial Proposed Action was to raise the dam 5 feet (Alternative 1) and 4 feet (Alternative 2) in the models. The final design would raise the dam by only 2 feet. It was determined not necessary to run a model on the lessor impact of a 2 feet raise because the initial proposal and models analyzed at the 4 and 5 feet raise were a worst case scenario of impacts on water quality.

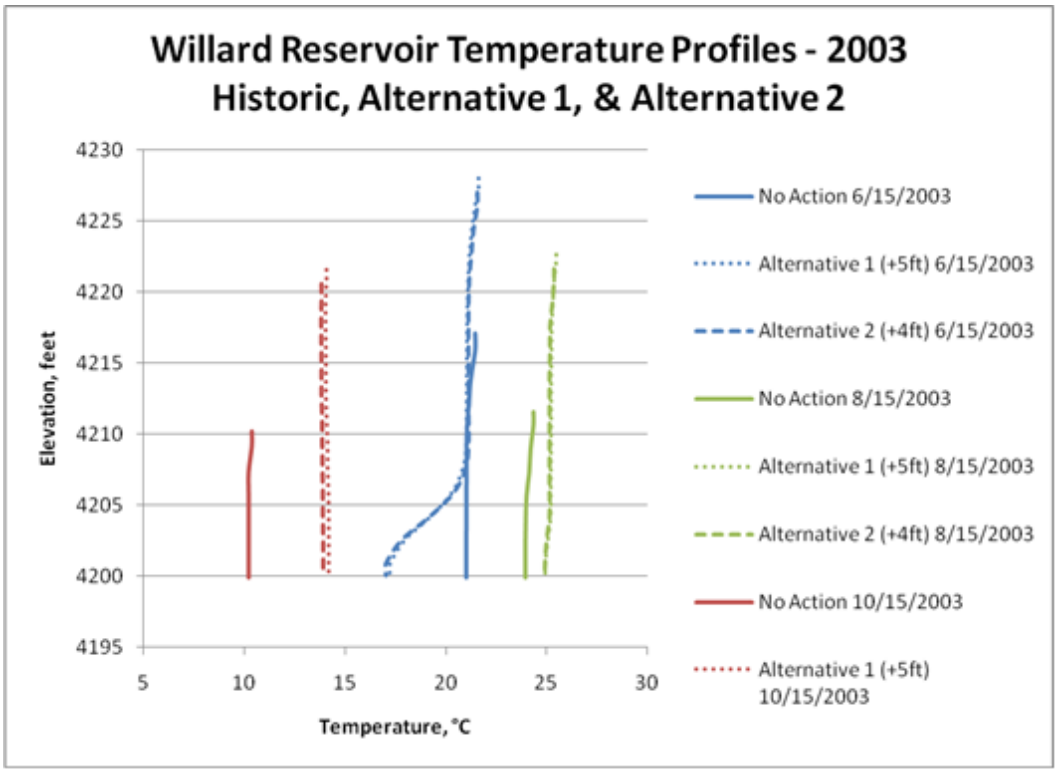

Figure 20. Comparison of 2003 temperature profiles, Willard Reservoir, No Action (solid lines), Alternative 1 (dotted lines), and Alternative 2 (dashed lines).

Modeled results indicated that thermal stratification would not fully develop in either simulation. There were cases when slight stratification was evident, as shown by the July 15, 2005, profile in Figure 21, but the model predicted the reservoir was mostly mixed from top to bottom throughout the summer in the No Action and Propose Action simulations. The enlarged reservoir of the Proposed Action simulation was slightly more resistant to mixing, following a period of calm weather than the No Action simulation, but it eventually mixed to nearly the same degree.

During certain times of the year, there were apparent differences in temperature of the No Action and Proposed Action simulation results. The October 15, 2003, temperature profile in Figure 20 illustrates the large differences in temperature between the simulations. Each year beginning in late summer and continuing through fall the reservoir entered "fall turnover," a process in which the surface water would cool and begin to mix downward, cooling the entire water column. The enlarged, deeper reservoir of the Proposed Action would extend the duration of this cooling process, because the larger storage volume would retain more heat and thus required more time to cool. The difference in temperatures between the No Action and Proposed Action simulations were most obvious when the difference in storage volume of the two simulations was greatest. Conversely, in the spring when the reservoir was warming up temperatures results from the Proposed Action simulation indicated that the reservoir would require more time to warm than the No Action simulation, again because of the larger volume of water that was stored. The difference between the two simulations in the spring was, however, not as great as in the fall.

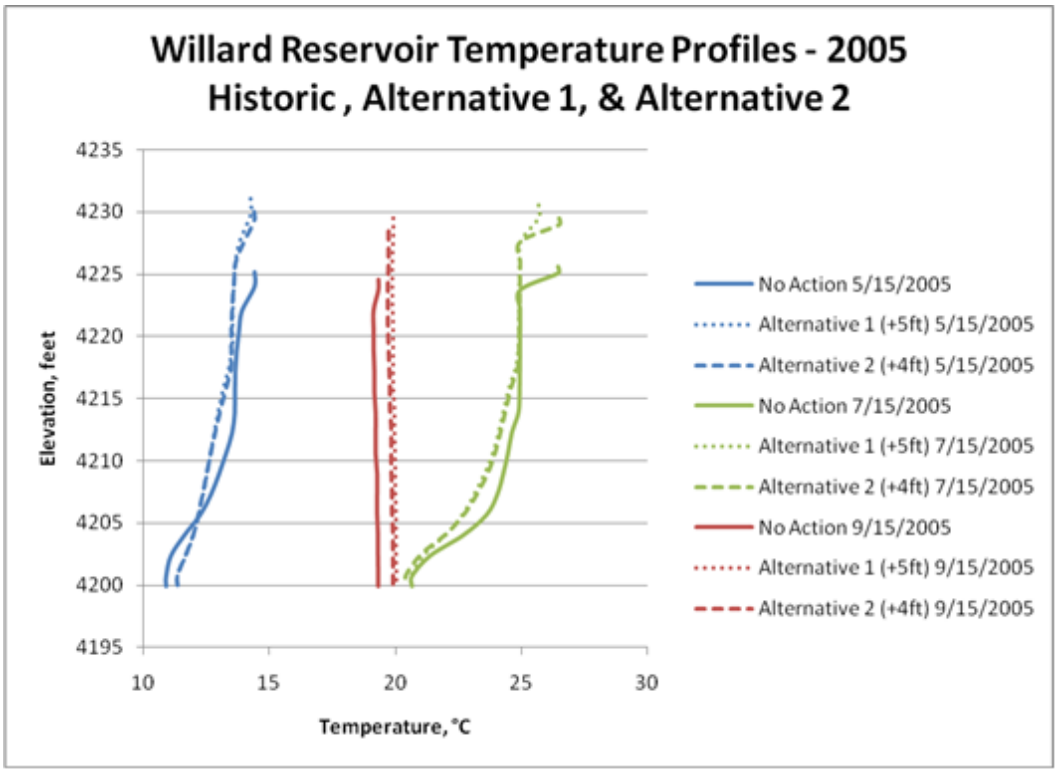

Figure 21. Comparison of 2005 temperature profiles, Willard Reservoir, No Action (solid lines), Alternative 1 (dotted lines), and Alternative 2 (dashed lines)

Based on the minor differences in thermal stratification between the two simulations the enlarged reservoir would not result in negative impacts to water quality. The increased duration of fall turnover would not be expected to affect dissolved oxygen levels or nutrient cycling but it could lead to altered growing periods for plankton.

The original model found no expected effects on water quality due to higher temperatures, even when using the initial Proposed Action of a 4 feet or 5 feet raise. Under that scenario it was determined that later in the year when the water elevation is low, due to the irrigation season, the water column would stay well mixed. Turbidity would continue to be high due to wave action mixing the water with sediments on the bottom of the reservoir. Under the 2 feet raise there would be no expected increase in water quality impacts when compared to the No Action Alternative.

3.3.5 System Operations

3.3.5.1 No Action Alternative

Under the No Action Alternative, Reclamation would not raise the crest of the dam's embankment and the capacity of the reservoir would not be increased. Current operations of the reservoir, which are subject to the physical constraints of the existing storage and conveyance systems, and to the water rights agreements described in previous sections, would continue.

According to a 2010 District Demand Study, increased future demands could result in water shortages by the year 2030. It is anticipated that even under the No Action Alternative, the District could more heavily utilize surplus Weber River flows in the future. Relative to historic conditions, this could increase the yield and the reliability of Willard Reservoir. Figure 22 provides a comparison of observed reservoir elevation between WY 1992 and WY 2013, to simulated elevation over the same period given increased diversion of available surplus Weber River flows. The simulated results are based on historic hydrology, historic demands, and the physical constraints of the existing conveyance and storage system—the "No Action" alternative.

Given increased diversion of surplus Weber River flows, Willard Reservoir could potentially have filled in 17 of 28 years--5 more years than occurred historically. This includes 2007 and 2008, which were constrained due to construction activities, as well as 2001, 2006, and 2012. In addition, the average end of water year active storage (i.e. storage above the minimum outlet works intake level) for the 22-year period, excluding 2007 and 2008, was increased by 17 percent with the additional diversions, or from 139,000 AF (historic observed) to 163,000 AF (historic simulated).

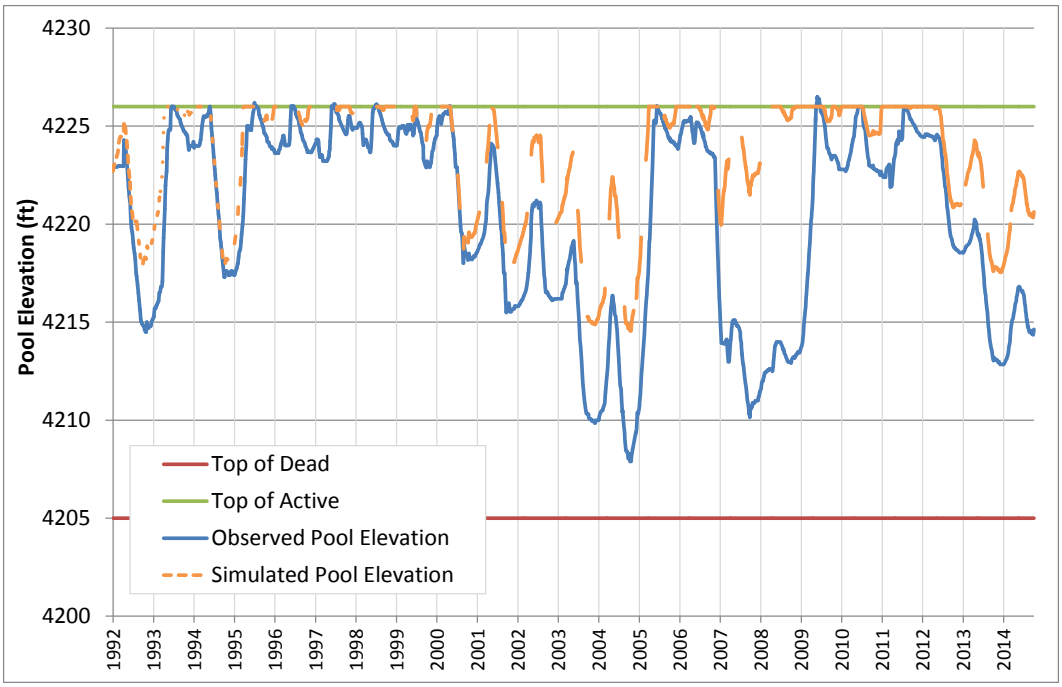

Figure 22. Comparison of observed Willard Reservoir pool elevation to simulated pool elevation given increased diversion of surplus Weber River flows (WY 1992-WY 2013).

3.3.5.2 Proposed Action

Under the Proposed Action Alternative, Reclamation would raise the crest of the dam's embankment in order to increase the capacity of the reservoir. Current operations of the reservoir would continue, as the Proposed Action Alternative would have no significant effect on the day to day operations of Slaterville Diversion Dam, Willard Canal, Willard Pumping Plants #1 and #2, or Layton Pumping Plant. Operations would be subject to the physical constraints of the proposed storage system and existing conveyance system, and to the water rights agreements described in previous sections. Relative to historic conditions, diversions could continue for a longer duration in order to fill the expanded reservoir, assuming availability of surplus Weber River flows.

It is anticipated that under the Proposed Action Alternative, the District would more heavily utilize surplus Weber River flows in the future. Figure 23 provides a comparison of observed reservoir elevation between WY 1992 and WY 2013, to simulated elevation over the same period given expanded reservoir capacity and an increased diversion of surplus Weber River flows. The simulated results are based on historic hydrology, historic demands, and the physical constraints of the proposed storage system and the existing conveyance system-the "Proposed Action" alternative.

Under these conditions, Willard Reservoir could potentially have filled in 17 of 28 years--5 more years than occurred historically, and the same number of years as in the No Action Alternative. This includes 2007 and 2008, which were

constrained due to construction activities, as well as 2001, 2006, and 2012. Under the Proposed Action Alternative, the average end of water year active storage (i.e. storage above the minimum outlet works intake level) for the 22-year period, excluding 2007 and 2008, was increased by 32 percent with the additional capacity and diversions, or from 139,000 AF (historic observed) to 183,000 AF (proposed action). This also represents a 13 percent increase over the No Action Alternative. While the operational decision to fill A.V. Watkins would be determined by the District, the simulation results suggest that there is potential to increase both the yield and reliability of Willard Reservoir under the Proposed Action Alternative.

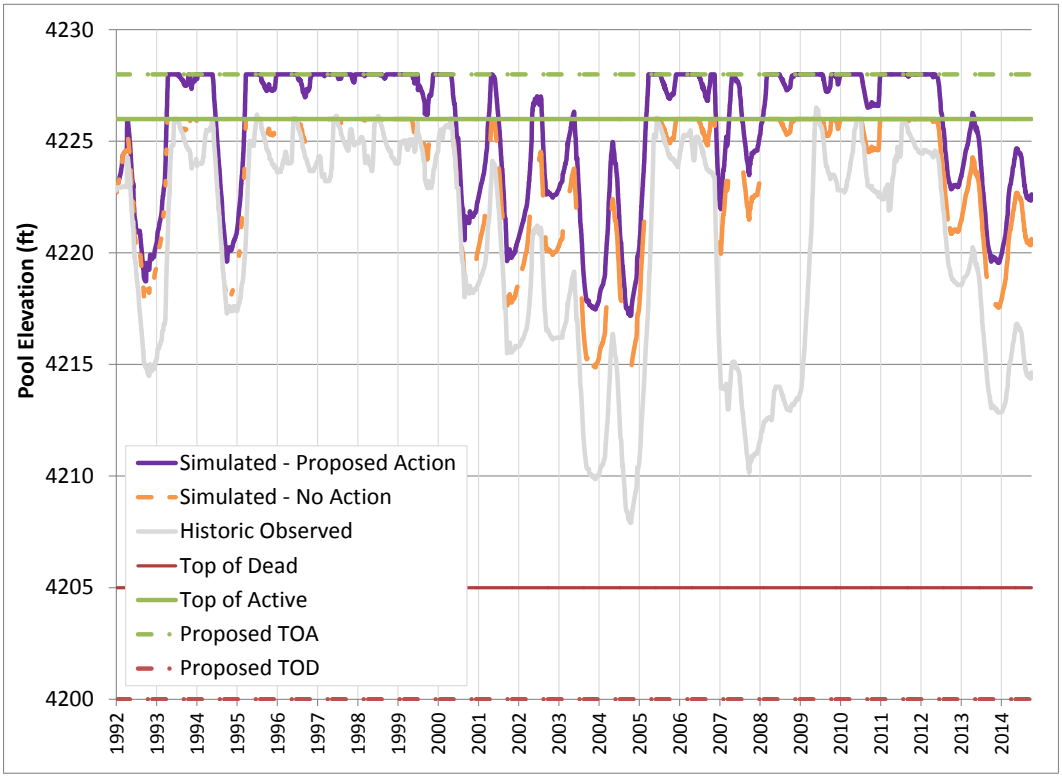

Figure 23. Comparison of observed and simulated Willard Reservoir pool elevation. Relative to historic observations and to the No Action alternative, the Proposed Action Alternative could result in increased storage and yield.

3.3.6 Public Safety, Access, and Transportation

3.3.6.1 No Action Alternative

The No Action Alternative would have no impact on public transportation. However, to protect the public, the number of water craft allowed to access the reservoir could be limited if the water surface area or depth of the reservoir is sufficiently reduced to warrant such an action by the State Parks.

3.3.6.2 Proposed Action

The Proposed Action would have minor impacts on public transportation due to construction. Access for construction areas from the staging areas and borrow areas would utilize public roads, so minor impacts would be anticipated (see Appendix A). To protect the public during construction, recreation areas may be closed. Additionally, the number of water craft allowed to access the reservoir could be limited, if the water surface area or depth of the reservoir is sufficiently reduced to warrant such an action by the State Parks.

3.3.7 Visual Resources

Reclamation uses in most cases the Forest Service's Visual Management System to analyze and classify the existing Visual Resource. In this way Reclamation can better provide measurable standards for its management.

VQOs are determined by combining 'variety classes' (landscape diversity), and 'sensitivity levels' (measurement of public concern). The resultant VQOs give an indication of change that is allowed in each case. VQOs include:

<u>Preservation</u>

Generally, management allows for ecological changes only.

<u>Retention</u>

Management allows for management activities which are not visually evident.

<u>Partial Retention</u>

Management allows for man-made facilities and disturbance to appear visually subordinate to the natural landscape.

<u>Modification</u>

Management allows for man-made facilities and disturbances which visually dominate the natural landscape. However, the result of the activity should blend with or compliment the natural landscape.

<u>Maximum Modification</u>

Management allows for man-made facilities and disturbances which visually dominate the natural landscape and may not blend with or compliment the natural landscape when viewed from up to a five-mile distance.

In the case of Willard Reservoir, the majority of management areas are identified as having a 'Partial Retention' visual quality objective. This indicates that man-made impacts must appear visually subordinate to the natural landscape. The

remaining management areas are classified as a 'Modification' visual quality objective, meaning that man's disturbance to the environment can visually dominate the visual landscape. However, the impacts should blend with or compliment the natural landscape.

3.3.7.1 No Action Alternative

The No Action Alternative would have no effect on visual resources.

3.3.7.2 Proposed Action

The Proposed Action Alternative would create a larger water surface area when the reservoir is at capacity elevation 4,228 feet. The higher dam crest is not expected to have a significant impact on the existing condition of visual resources.

The most noticeable impact to visual resources would be to the vegetation along the beach and in the parts of the campgrounds that would be inundated. The plants that are below high water run the risk of having too much water and would most likely drown. There are mature trees and shrubs that provide a large canopy and privacy barriers between most of the campground. If these were to die off there is very little new volunteer growth to replace the over story. If the older growth vegetation is inundated and killed off then they not only become an eyesore to the area but they also become a safety hazard. To mitigate the problem of killing off some of the old growth, new trees and shrubs would be planted above the new high water mark and protected from wildlife. This new vegetation should be planned to open up desirable vistas or to screen out undesirable views and noise. The additional vegetation should also enhance the existing landscape through texture, line, form, or color.

Another impact to the visual resources of the Park would be the improvement to the view of the water from the campgrounds and day-use areas. Having the water closer to the campgrounds and day use areas would leave the visitors with a pleasant, calming experience.

According to the Willard Reservoir Resource Management Plan, the time limit after construction, for project rehabilitation to meet the adopted VQOs of modification and maximum modifications is 5 years. This means that after all changes are made the Park should look like nothing was done with the exception of the dikes, canal and pumping appurtenances, because of their strong contrasts with the natural environment.

3.3.8 Socioeconomics

For socioeconomic resource analyses, annual monetary values are converted to present worth values using the 30-year T-bill rate of 3.336 percent and a 50-year period of analysis.

3.3.8.1 No Action Alternative

The No Action Alternative would result in socioeconomic impacts. Under this alternative, deliveries would be inadequate to satisfy future demand and force the District to look for less desirable alternatives for water.

3.3.8.2 Proposed Action

The Proposed Action would provide an additional 19,000 AF of water to meet future demands at a relatively low cost compared to the alternatives. The economic cost of implementing this alternative is estimated at $29 million in present worth terms. During construction, the temporarily restricted reservoir level would have minor short-term impacts on water supply and recreation. No measurable economic effect on recreation, traffic, or the commercial sector would be expected from implementation of the Proposed Action other than those mentioned in Sections 3.3.1 and 3.3.6.

3.3.9 Cultural Resources

3.3.9.1 No Action Alternative

Under the No Action Alternative, there would be no adverse effects to cultural resources. There would be no need for ground disturbance associated with the Proposed Action. The existing conditions would remain intact and would not be affected.

3.3.9.2 Proposed Action

Billat and Billat (2015) report that their Class III inventory revisited, or attempted to, seven previously documented sites and updated the inventory records for all. Only one new site was recorded and added to the inventory. Of these eight properties, six have been previously evaluated as eligible for nomination to the NRHP and two are deemed ineligible. However, of the six eligible sites, five had last been located and evaluated 23 years ago (Baker et al. 1992) and could not be relocated in the 2015 inventory. They have been lost due to natural processes and, possibly, past work on the Arthur V. Watkins dam. Consequently, there is no effect on these five sites and the two ineligible sites.

The remaining site among the seven previously recorded sites, the Brigham-Ogden Canal (42BO1685) is eligible and lies in or adjacent to Commercial Borrow Area A. The portions of the canal bordering the borrow area are open within the area the open historic canal has been replaced with pipe. It is the view of Reclamation that there will be no effect on this site. This conclusion is presently under review.

The single newly recorded site, the Arthur V. Watkins Dam is recommended as eligible for nomination to the NRHP by the contractor (Billat and Billat 2015). Reclamation concurs with this evaluation. However, the contractor argues that

the proposed action does not substantially alter the structure with the small proposed change in elevation of the crest. It does not impair the historical or visual integrity of the dam. Consequently, there is no effect on 42BO2019. Reclamation concurs with this conclusion.

It is Reclamation's position that the proposed action will have no effect on historic properties.

3.3.10 Paleontological Resources

3.3.10.1 No Action Alternative

Under the No Action Alternative, there would be no impacts to paleontological resources. There would be no need for ground disturbance associated with the Proposed Action. The existing conditions would remain intact and would not be affected.

3.3.10.2 Proposed Action

Until consultation with the UGS is completed, impacts to paleontological resources are unclear.

3.3.11 Wetlands and Vegetation

3.3.11.1 No Action Alternative

The No Action Alternative would have no effect on upland or wetland habitats.

3.3.11.2 Proposed Action

Approximately 15 acres of upland habitat (consisting mostly of sagebrush, rabbitbrush, grasses, and weeds) would be temporarily affected. However, the majority of construction would occur on previously disturbed lands. Many weedy patches occur in these areas.

<u>Uplands</u>

Negative effects to undisturbed, native upland vegetation would be negligible and disturbed areas would return to useful habitat over time. It is possible that reseeding commitments listed in this EA could improve the condition and extent of native upland vegetation in the project area to better than current conditions.

After construction, disturbed upland areas would be recontoured and revegetated with native plants. A process of vegetative succession would then begin. This process would eventually establish a native vegetative community favorable to wildlife species.

Wetlands

Approximately 13 acres of jurisdictional wetlands exist within the boundaries of the construction use areas and are identified in in Figure 24. The project has been designed to avoid impacts to these wetlands. These 13 acres of wetlands would be clearly marked as off-limits for construction use and would be protected from construction impacts using appropriate methods. Several trees may need to be removed. These would be smaller trees along the perimeter of the reservoir's current high water line and upon the north breakwater crest. Mature trees could also be affected due to constant inundation; however all trees and wetland vegetation would be protected as much as possible.

Figure 24. Wetlands within the boundaries of the construction use areas

3.3.12 Wildlife Resources

3.3.12.1 No Action Alternative

Species associated with or dependent on upland or wetland habitats currently existing in areas around the reservoir pool would not be affected by the No Action

Alternative. Fish populations and other aquatic species and their feeding and breeding habitat would not be affected.

3.3.12.2 Proposed Action

Approximately 15 acres of upland habitat would be temporarily disturbed. Big game would be able to obtain water and any other needs provided by upland and wetland habitat in the same general areas as they now find it. Big game may be temporarily displaced from small areas during construction activities, but would move back in a short period of time. Due to the relatively small extent of disturbance and in comparison to current, normal human activity in the area, big game would not be measurably affected. Other mammals existing in wetland areas where construction occurs would be temporarily displaced from construction areas. Wildlife dependent on wetlands within wildlife refuges would be minimally disturbed until water deliveries are back to normal after construction of the proposed project.

Construction activities could disturb bird species from preferred breeding, nesting, or foraging habitat. These effects would be limited to relatively small areas, and birds would be capable of moving to very similar habitat nearby. Snowy plover breeding populations can be found near the western embankment of the dam. Therefore, a survey of ground nesting birds would be conducted prior to any ground disturbing activities. This survey would be conducted by a biologist in order to avoid, to the extent possible, any negative impacts to these birds. In addition, if the timing of approval permits, during the non-breeding season (late fall through winter) the areas would be grubbed to mineral soil or rock to discourage ground nesting birds from initiating a nest.

Construction associated with this alternative could disturb reptiles and amphibians from preferred habitat. These effects would be limited to a relatively small area and these animals would be capable of moving to very similar habitat nearby.

Fish populations existing within the reservoir likely experienced stresses associated with the previous reservoir water level drawdown associated with the Safety of Dams (SOD) fix during 2008 (Reclamation SOD 2007). However, there have been no reports of substantial drops in fish population levels associated with the SOD construction. The Proposed Action Alternative would not cause any more stresses than the previous SOD construction.

Fish populations in the reservoir would be expected to remain at current numbers after the reservoir level increases. This is likely since spawning conditions would remain much the same as they are now. This alternative would increase the amount of water stored in the reservoir, thus fish would become somewhat less dense per unit of water. This may minimally affect fishing success rates initially until the fish populations rebound.

Water deliveries to the Ogden Bay WMA downstream of the Slaterville Diversion on the Weber River, would be decreased during the filling stage of the new heightened reservoir. Deliveries would likely be reduced by less than 10 percent of pre-project deliveries, depending on hydrologic conditions. Any reductions in flow would not be allowed to violate existing agreements to provide water to the Ogden Bay WMA. Wildlife and fishery habitats in these areas would not likely be substantially affected during the reservoir filling period, and would naturally fully rebound after this period is over. The Weber Basin Project has provided an average increase of 10,900 AF of water over pre-project conditions, within the Ogden Bay WMA (U.S. Department of the Interior, Bureau of Reclamation 1987).

Fish populations below the Slaterville Diversion may be minimally impacted due to slightly lower flows below the diversion during the reservoir's initial filling to its new maximum elevation. These populations would naturally rebound after this filling period.

After completion of the Proposed Action, the water elevation of the reservoir would be allowed to rise and the reservoir could once again be filled to its maximum water surface elevation.

3.3.13 Threatened, Endangered, Candidate, Proposed, and Sensitive Species

3.3.13.1 No Action Alternative

Under the No Action Alternative, no negative effects would occur to bald eagles or to other threatened, endangered, candidate, proposed or state sensitive species in the project area.

3.3.13.2 Proposed Action

Canada lynx occurred historically in the mountains above the reservoir. However, currently they do not occur in the mountains above the project area or within the project area.

Western yellow-billed cuckoo are not known to occur within the area affected by the Proposed Action. Generally, the species requires habitat that is in larger patches, with uneven aged stands, and mostly away from constant human use. Although a few individuals may migrate through the area, or even possibly use the area at some point in their life cycle, their presence is not likely. Additionally, the extent of disturbance associated with this project would leave a large area of habitat unaffected allowing any possible use by these birds to occur in these adjacent areas.

In addition, the Greater sage-grouse (*Centrocercus urophasianus*) is listed as a candidate species, and they do not occur within the project area.

Under the Proposed Action Alternative a **No Effect** determination is made for all **threatened and endangered species**.

State listed sensitive species may be temporarily affected by the Proposed Action Alternative. However, effects would be short-lived, with little to no effects to the habitat of the aforementioned species. The Proposed Action Alternative would not cause a trend toward federal listing.

More specifically, bald eagles are winter residents of this area and could be displaced by construction activities (noise and habitat disturbance). Eagles use cottonwood trees in the area for roost and observation perches mainly during the winter. Removal of these trees either living or dead would be avoided to the extent possible. However, inundation of the campground area may affect some of the trees in the area. In order to minimize long-term effects, we would mitigate by planting trees in areas surrounding the reservoir, as close to the current location as possible, but in the areas of lowest human use. In addition, during the winter (November to March) we would place a seasonal buffer on construction activities occurring within 1 mile of winter roost sites. During this time period, construction would be restricted to the hours between 0900 and 1 hour prior to sunset. This restriction would ensure that any roosting eagles would not be substantially affected by the project.

If eagles persisted and began to show mating/nesting behavior, construction activities within 1 mile of an occupied nest site would not be allowed until post fledging (usually not later than August 31). In addition, a 0.5 mile no-construction activity buffer would be in place for any known raptor nests, and timing restrictions would follow the Utah raptor guidelines (Romin and Muck 2002). This restriction alone would ensure that any nesting raptors would not be substantially affected by disruption of normal behaviors due to the project. Any other effects to raptors would be short-term or very limited in extent.

3.4 Summary of Environmental Effects

Table 5 below describes environmental effects under the No Action Alternative and the Proposed Action Alternative.

Table 5
Summary of Environmental Effects of the A. V. Watkins Dam Crest Raise Project

Resource Issue	No Action Alternative	Proposed Action
Recreation	No effect	Minimal to moderate Impacts, would be mitigated to the extent possible
Water Rights	No effect	No effect
Water Resources	Operational changes may be needed	Increased reservoir yield; decreased river flow during drier years during initial filling
Water Quality	No effect	Minimal impacts
System Operations	Operational changes may be needed	Minimal impacts
Public Safety, Access, and Transportation	No effect	Minimal impacts
Visual Resources	No effect	Minimal to moderate impacts, would be mitigated to the extent possible
Socioeconomics	Substantial effects	Minimal to moderate impacts
Cultural Resources	No effect	No effect
Paleontological Resources	No effect	Until a paleontological file search is completed for the APE, effects to paleontological resources are unknown
Wetlands and Vegetation	No effect	Minimal impacts
Wildlife Resources	No effect	Temporary effects during construction. The fishery would rebound to fill the larger reservoir.
Threatened, Endangered, Candidate, and State Sensitive Species	No effect	No effect for T&E species and minimal impacts to State Sensitive Species

3.5 Indian Trust Assets

Indian Trust Assets are legal interests in property held in trust by the United States for Federally recognized Indian Tribes or Indian individuals. Assets can be real property, physical assets, or intangible property rights, such as lands, minerals, hunting and fishing rights, and water rights. The United States has an

Indian trust responsibility to protect and maintain rights reserved by or granted to such tribes or individuals by treaties, statutes, and executive orders. These rights are sometimes further interpreted through court decisions and regulations. This trust responsibility requires that all Federal agencies take all actions reasonably necessary to protect trust assets. Reclamation carries out its activities in a manner which protects these assets and avoids adverse impacts when possible. When impacts cannot be avoided, Reclamation would provide appropriate mitigation or compensation. Implementation of the Proposed Action Alternative would have no foreseeable negative impacts on Indian Trust Assets.

3.6 Environmental Justice

Executive Order 12898, established Environmental Justice as a Federal agency priority to ensure that minority and low-income groups are not disproportionately affected by Federal actions. Implementation of the Proposed Action would not disproportionately (unequally) affect any low-income or minority communities within the project area. The reason for this is that the proposed project would not involve major facility construction, population relocation, health hazards, hazardous waste, property takings, or substantial economic impacts. This action would therefore have no adverse human health or environmental effects on minority and low-income populations as defined.

3.7 Cumulative Effects

In addition to project-specific impacts, Reclamation analyzed the potential for significant cumulative impacts to resources affected by the project and by other past, present, and reasonably foreseeable activities within the watershed. According to the Council on Environmental Quality's regulations for implementing NEPA (50 CFR §1508.7), a “cumulative impact” is an impact on the environment which results from the incremental impact of the action when added to other past, present, and reasonably foreseeable future actions, regardless of what agency or person undertakes such other actions. Cumulative impacts can result from individually minor but collectively significant actions taking place over a period of time. It focuses on whether the Proposed Action, considered together with any known or reasonably foreseeable actions by Reclamation, other Federal or state agencies, or some other entity combined to cause an effect. There is no defined area for potential cumulative effects.

Based on Reclamation resource specialists’ review of the Proposed Action Alternative, Reclamation has determined that this action would not have a significant adverse cumulative effect on any resources.

Chapter 4 Environmental Commitments

The following environmental commitments would be implemented as an integral part of the Proposed Action.

1. **Standard Reclamation Management Practices** - Standard Reclamation management practices would be applied during construction activities to minimize environmental effects and would be implemented by Reclamation construction forces, or included in construction specifications. Such practices or specifications include sections in the present report on public safety, dust abatement, air pollution, noise abatement, water pollution abatement, waste material disposal, erosion control, archaeological and historical resources, vegetation, and wildlife. All public access roads used during construction would be repaired if needed before construction contractors leave the project area.

2. **Additional Analyses** - If the Proposed Action were to change significantly from that described in the EA, because of additional or new information, or if other construction areas are required outside the areas analyzed in this EA, additional environmental analysis including cultural and paleontological analyses would be undertaken if necessary.

3. **404 Permit -** The construction contractor would obtain from the USACE, a 404 Permit if required. The USACE regulates all the jurisdictional waters of the United States, including jurisdictional wetlands. The conditions and requirements of the 404 Permit would be strictly adhered to by the contractor.

4. **Air Quality -** Best Management Practices would be implemented to control fugitive dust during construction. The contractor would follow the EPA recommended control methods for aggregate storage pile emissions to minimize dust generation, including periodic watering of equipment staging areas, along with dirt and gravel roads. All loads that have the potential of leaving the bed of the truck during transportation would be covered or watered to prevent the generation of fugitive dust. Chemical stabilization would not be allowed.

5. **Utah Pollutant Discharge Elimination System Permits -** These permits would be obtained by the contractor from the UDEQ before

any discharges of water from construction of the project enter into A.V. Watkins Reservoir, or adjacent areas.

6. **Wetland Mitigation** - Any permanently impacted wetlands within the project area would be fully mitigated if required. A Wetland Mitigation Proposal Plan would be prepared and sent to the USACE for approval. This mitigation proposal plan would follow the USACE Mitigation and Monitoring Proposal Guidelines. Before submitting to the USACE, the mitigation proposal plan would be reviewed and approved by a Reclamation biologist.

7. **Sedimentation -** Appropriate measures would be taken to ensure that construction related sediments would not enter Willard Reservoir, either during or after construction.

8. **Cultural Resources** - Any person who knows or has reason to know that he/she has inadvertently discovered possible human remains on Federal land, he/she must provide immediate telephone notification of the discovery to Reclamation's Provo Area Office archaeologist. Work would stop until the proper authorities are able to assess the situation onsite. This action would promptly be followed by written confirmation to the responsible Federal agency official, with respect to Federal lands. The Utah SHPO and interested Native American Tribal representatives would be promptly notified. Consultation would begin immediately. This requirement is prescribed under the Native American Graves Protection and Repatriation Act (43 CFR Part 10); and the Archaeological Resources Protection Act of 1979 (16 U.S.C. 470).

9. **Cultural Resources Monitoring** - All ground surface disturbing activities associated with the Proposed Action would be monitored for cultural resources. Should any cultural resources be encountered during ground surface disturbing activities, work in the area shall cease until a qualified archaeologist can assess the discovery.

10. **Paleontological Resources** - Should vertebrate fossils be encountered by the proponent during ground surface disturbing activities, construction must be suspended until a qualified paleontologist can assess the discovery.

    A paleontological file search would be completed by the UGS prior to implementation of the Proposed Action.

11. **Construction Restrictions** - Construction activities would be confined to previously disturbed areas, to the extent practicable.

12. **Public Access** - Construction sites would be closed to public access. Temporary fencing, along with signs, would be installed to prevent public access. Reclamation and the District would coordinate with Park personnel, as necessary, to ensure public safety.

13. **Disturbed Areas** - All disturbed lands recommended for re-vegetating would be re-contoured and re-vegetated using an approved, weed free, native seed mix and appropriate seeding methods. Success of this effort would be evaluated on the basis of percent vegetative cover of the ground surface and level of plant species diversity. The composition of seed mixes would be coordinated with wildlife habitat specialists. Weed control on all disturbed areas would be required.

14. **Invasive Species** - Appropriate steps would be taken to prevent the spread of, and to otherwise control undesirable plants and animals within areas affected by construction activities. Equipment used for the project would be inspected for reproductive and vegetative parts, foreign soil, mud or other debris that may cause the spread of weeds, invasive species and other pests. Such material would be removed before moving vehicles and equipment onto any Federal land. Upon the completion of work, decontamination would be performed within the work area before the vehicle and/or equipment are removed from Federal project lands.

15. **Vegetation** - Design and construction would be such that trees and all existing vegetation would be saved as much as possible. With the higher water table as a result of the 2 feet raise, there is concern that old mature cottonwood trees near and below the new high water elevation could slowly die. Long-term effects would be mitigated by planting trees in areas surrounding the reservoir, close to the existing trees. Saplings would be planted and protected in and around campgrounds and the current mature trees to replace any trees lost due to the project.

16. **Breeding Birds** – A survey of ground nesting birds would be conducted prior to any ground disturbing activities. This survey would be conducted by a biologist in order to avoid, to the extent possible, any negative impacts to these birds.

17. **Raptor Guidelines** – We would adhere to the Romin and Muck (2002) Utah, raptor guidelines by placing seasonal and spatial "no construction" buffers, along with daily timing restrictions around all active raptor nests or winter roosting bald eagles. If unknown nests are located during construction, the same guidelines would be implemented.

Chapter 5 Consultation and Coordination

5.1 Introduction

This chapter details the consultation and coordination between Reclamation and other Federal, state, and local government agencies, Native American Tribes, and the public during the preparation of this EA. Compliance with NEPA is a Federal responsibility that involves the participation of all of these entities in the planning process. NEPA requires full disclosure about major actions taken by Federal agencies and accompanying

5.2 Public Involvement

Reclamation solicited comments by letter May 24, 2010, on the scope of the Proposed Action. At that time, the Proposed Action included a 5-foot and 4-foot raise. This letter was sent to approximately 70 municipalities, organization, agencies, and the public with interests in the Proposed Action. Five comment letters were received. Comments were considered and incorporated into this Draft EA.

A public scoping meeting was held June 17, 2010, at the District offices in Layton, Utah. Questions regarding the project were answered and instructions on how to provide comments as detailed in the scoping letter were reviewed.

We invite interested parties to comment on this Draft EA. This notice is being sent to municipalities, organizations, agencies, and the public with interest in the project for a 30-day comment period. Comments are due by March 26, 2015. All comments will be considered and when appropriate addressed in finalizing the EA.

Interested parties may view a copy of the Draft EA on the internet at www.usbr.gov/uc/envdocs/index.html. They may also obtain a CD or hard copy by calling or submitting a written request to Mr. Peter Crookston, Bureau of Reclamation, Provo Area Office. The address is 302 East 1860 South, Provo, Utah 84606-7317, phone number 801-379-1152 or e-mail: pcrookston@usbr.gov.

5.3 Native American Consultation

Reclamation would conduct Native American consultation throughout the public involvement process. Consultation letters and copies of the Class III cultural

resource inventory report would be sent to the Ute Indian Tribe of the Uintah and Ouray Reservation, the Northwestern Band of Shoshoni Nation of Utah, the Paiute Indian Tribe of Utah, the Kaibab Band of Paiute Indians of the Kaibab Indian Reservation, the Skull Valley Band of Goshute Indians of Utah, the Confederated Tribes of the Goshute Reservation, the Shoshone-Bannock Tribes of the Fort Hall Reservation, and the Zuni Tribe of the Zuni Reservation. This consultation would be conducted in compliance with 36 CFR 800.2(c)(2), on a government-to-government basis. Through this effort, each tribe is given a reasonable opportunity to identify any concerns about historic properties; to advise on the identification and evaluation of historic properties, including those of traditional religious and cultural importance; to express their views on the effects of the Proposed Action on such properties; and to participate in the resolution of adverse

5.4 Utah State Historic Preservation Office

Upon acceptance of a final draft of the cultural resources inventory report, Reclamation will initiate consultation with the Utah SHPO for the purpose of making a final determination of effect.

5.5 Utah Geological Survey

Following authorization of the Proposed Action, a paleontological file search would be conducted by the Paleontological Assistant with the UGS.

Chapter 6 Preparers

The following contributors to the EA are part of the U.S. Department of the Interior, Bureau of Reclamation, Upper Colorado Region and Provo Area Office.

Name	Position Title	Contribution
Ms. Linda Andra	Secretary	Visual Identity, Editing
Mr. Rick Baxter	Fish and Wildlife Biologist	ESA Compliance. Wildlife Resources
Mr. Scott Blake	Recreation Specialist	Recreation, Visual Resources
Mr. Gary Carlson	Civil Engineer	Public Safety, Access, and Transportation; System Operations
Mr. Alan Christensen	Civil Engineer	Lands
Mr. Peter Crookston	Environmental Protection Specialist	Environmental Assessment Coordinator; NEPA Oversight
Mr. Jeff Hearty	Economist	Economics
Mr. Calvin Jennings	Archaeologist	Cultural Resource, Paleontological Resource, Indian Trust Assets
Mr. Shane Mower	Fish and Wildlife Biologist	Environmental Compliance
Mr. Robert Radtke	Water Quality Specialist	Water Quality
Ms. Beth Reinhart	Chief, Environmental Group	Project Oversight
Mr. Justin Record	Water Rights Specialist	Water Rights
Mr. Kerry Schwartz	Manager, Water and Environmental	Project Oversight
Mr. David Snyder	Fish and Wildlife Biologist	CWA Compliance, Wetlands
Mr. Cary Southworth	Supervisor Civil Engineer	Project Oversight
Mr. Spencer Strand	Civil Engineer	Project Oversight
Ms. Lee Traynham	Hydrologist	Water Resources
Mr. Nicholas Williams	Water Quality Specialist	Water Quality

Chapter 7 References

Baker, Shane A., Scott E. Billat, Lane D. Richens, and Richard K. Talbot, 1992. *An Archaeological Survey of Bureau of Reclamation Lands Around Willard Bay Reservoir, Northern Utah*. Office of Public Archaeology, Brigham Young University, Provo, Utah.

Billat, Lorna, and Scott Billat, 2015. A Cultural Resource Inventory of the Proposed A.V. Watkins Dam Raise Project, Box Elder Countuy, Utah. EnviroWest LLC. Woodland Hills, Utah.

Burr, Steven W. and Jakus, Paul, (2014 September). The Economic Impact of Bear River Heritage Area Tourism. Utah State University Institute for Outdoor Recreation and Tourism. Logan, Utah.

Carlson, R. E. (1977, March). A Trophic State Index for Lakes. *Limnology and Oceanography , 22* (2), pp. 361-369.

Chadwick, Raymond S., et al., June 1975. Soil Survey of Box Elder County, Utah - Eastern Part. USDA, NRCS, Washington, D.C.

Cole, T., & Wells, S. (2003). *CE-QUAL-W2: A Two-Dimensional, Laterally Averaged, Hydrodynamic and Water Quality Model, Version 3.2, Instruction Report EL-03-1.* Vicksburg, Mississippi: US Army Engineering and Research Development Center.

Cooke, D. G., Welch, E. B., Peterson, S. A., & Nichols, S. A. (2005). *Restoration and Management of Lakes and Reservoirs, 3rd Ed.* Boca Raton, Florida: CRC Press.

Fawcett, William and Steven R. Simms, 1993. *Archaeological Test Excavations in the Great Salt Lake Wetlands and Associated Analyses*. Department of Sociology, Social Work, and Anthropology, Utah State University, Logan, Utah.

Grayson, Donald K., 2011. *The Great Basin: A Natural Prehistor, Revised and expanded edition.* Berkeley and Los Angeles, California: University of California Press.

Madsen, David B., 1982. Get It Where the Getting's Good: A Variable Model of Eastern Great Basin. In Man and Environment in the Great Basin, D.B. Madsen and J.F. O'Connell (eds.). Society for American Archaeology Papers, Number 2, Washington, D.C.

Romin, L. A., and J. A. Muck. 2002. Utah Field Office guidelines for raptor protection from human and land use disturbances. U. S. Fish and Wildlife Service, Salt Lake City Ecological Field Office, Salt Lake City, Utah.

Shipman, S. T. 1977. Spawning biology of channel catfish, *Ictalurus punctatus,* in Willard Bay Reservoir, Utah. M.S. Thesis. Utah State University, Logan.

Simms, Steven R., 2009. *Ancient Peoples of the Great Basin and Colorado Plateau.* Walnut Creek, CA: Left Coast Press.

Sommerfeldt, T.E., 1984. Initial assessment of the introduction of spottail shiner (Notropis hudsonius) and delta smelt (Hypomesus transpacificus) into Willard Bay Reservoir, Utah, 81pp.

U.S. Department of Interior, Bureau of Reclamation, 1958. Weber Basin Project, Definite Plan Report as supplemented, Bureau of Reclamation. On file at the Provo Area Office, Bureau of Reclamation.

U.S. Department of Interior, Bureau of Reclamation, 1963. Memorandum of Agreement-Relating to the Development of the Willard Waterfowl Management Area, Contract No. 14-06-400-2871.

U.S. Department of Interior, Bureau of Reclamation, 1973. Memorandum of Agreement - Regarding the Administration and Development of Certain Lands at The Willard Reservoir for Wildlife Management Purposes, Contract No. 14-06-400-5925.

U.S. Department of Interior, Bureau of Reclamation, 1980. Memorandum of Agreement - Regarding the Administration and Development of Certain Lands at The Willard Reservoir for Wildlife Management Purposes, Contract No. 0-07-40-4478.

U.S. Department of Interior, Bureau of Reclamation, 1983. Lease of Land For Management Purposes, Contract No. 3- 07-40-L1410.

U.S. Department of Interior, Bureau of Reclamation, 1987. Draft Environmental Statement, Change of Water Use in Willard Reservoir, Weber Basin Project, Utah.

U.S. Department of Interior, Bureau of Reclamation, 1987. Supplement to 1980 Memorandum of Agreement - Relating to the Administration and Development of Certain Lands at the Willard Reservoir for Wildlife Management Purposes, Contract No. 6-07-L1450.

U.S. Department of the Interior, Bureau of Reclamation, revised 1994. Standard Operating Procedures. A.V. Watkins Dam. Weber Basin Project, Utah.

U.S. Department of Interior, Bureau of Reclamation, 1997. Memorandum of Agreement for Administration, Development, Operation, and Maintenance of the Wildlife Management Area at Willard Reservoir, Weber Basin Project, Utah.

U.S. Department of Interior, Bureau of Reclamation, 2000. Willard Reservoir Resource Management Plan.

U.S. Department of Interior, Bureau of Reclamation, 2007. A.V. Watkins Dam Safety of Dams Modification Final Environmental Assessment and Finding of No Significant Impact PRO-EA-07-002.

Utah Department of Environmental Quality, 2006, Division of Water Quality, Salt Lake City, Utah. Utah 2006 Integrated Report Volume I - 305(b) Assessment. June 15, 2006.

Utah Department of Environmental Quality, 2006, Division of Water Quality, Salt Lake City, Utah. Utah's 2006 Integrated Report, Volume II - 303(d), List of Impaired Waters, April 1, 2006.

Utah Division of Wildlife Resources, 1990. Introduction of gizzard shad and white bass into Willard Bay Reservoir. Project Proposal for Willard Bay Reservoir.

Wilson, G., 1993. Habitat management plan for Willard Bay Management Area. Utah Division of Wildlife Resources.

Appendices

Appendix A

Appendix B