APPENDIX A

Figures

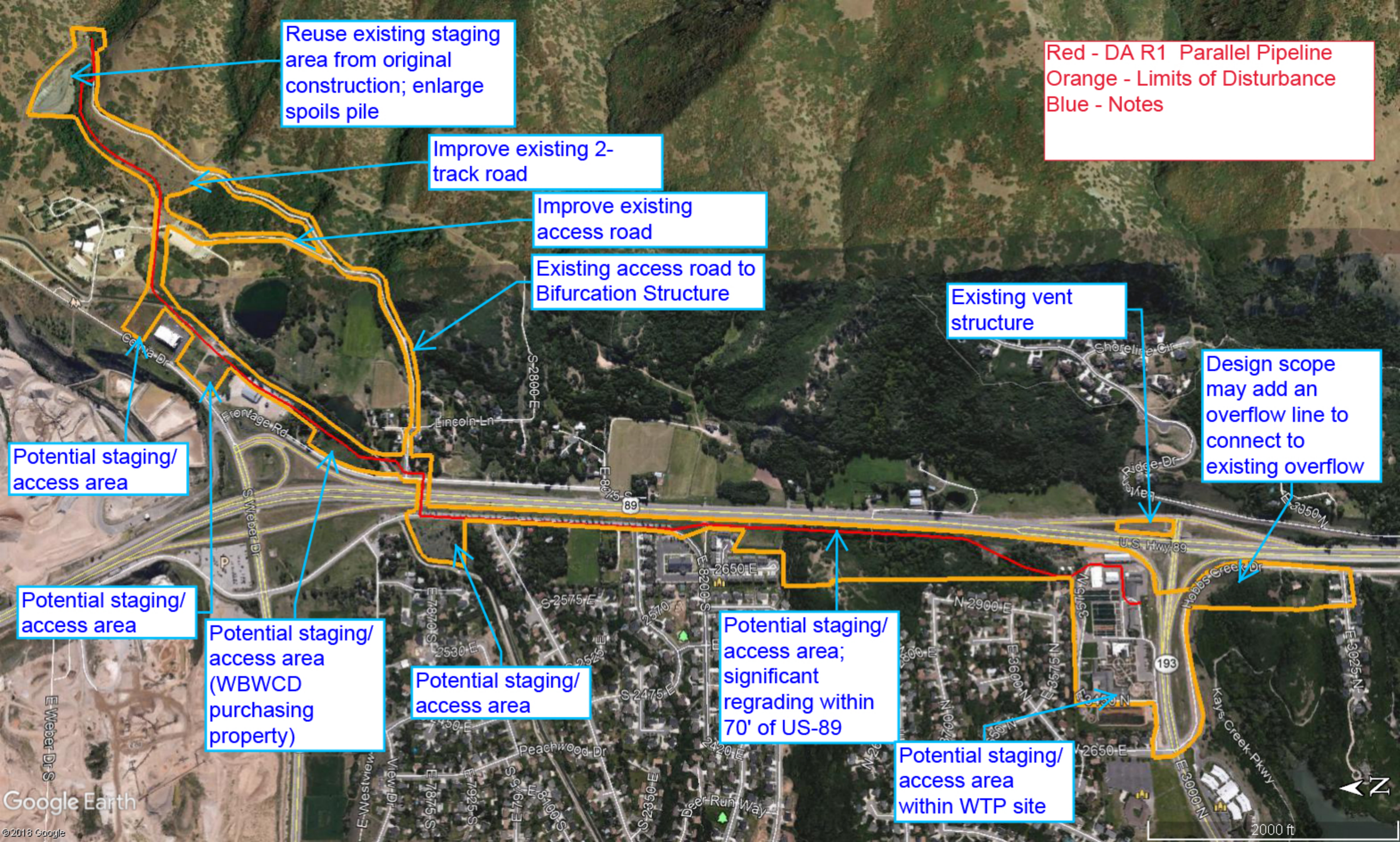
Reuse existing staging area from original construction; enlarge spoils pile
Improve existing 2-track road
Improve existing access road
Existing access road to Bifurcation Structure
Red - DA R1 Parallel Pipeline
Orange - Limits of Disturbance
Blue - Notes
Existing vent structure
Design scope may add an overflow line to connect to existing overflow
Potential staging/ access area
Potential staging/ access area
Potential staging/ access area (WBWCD purchasing property)
Potential staging/ access area
Potential staging/ access area; significant regrading within 70' of US-89
Potential staging/ access area within WTP site
Frontage Rd
S Weber Dr
Lincoln Ln
S-2800-E
E 8675 S
89
U.S. Hwy 89
Shoreline Cir
Ridge Dr
Hobbs Creek Dr
E 3350 N
193
Kays Creek Pkwy
E 3000 N
E 3025 N
E 2650 E
S-2575 E
E 8200 S
N 2900 E
E 3600 N
E 3575 N
N 3575 W
E 2650 N
S 2475 E
Peachwood Dr
Deer Run Way
E Westview
View Dr
E 7875 S
E 7925 S
E 8100 S
S 2350 E
E Weber Dr S
Google Earth
©2018 Google
2000 ft
N

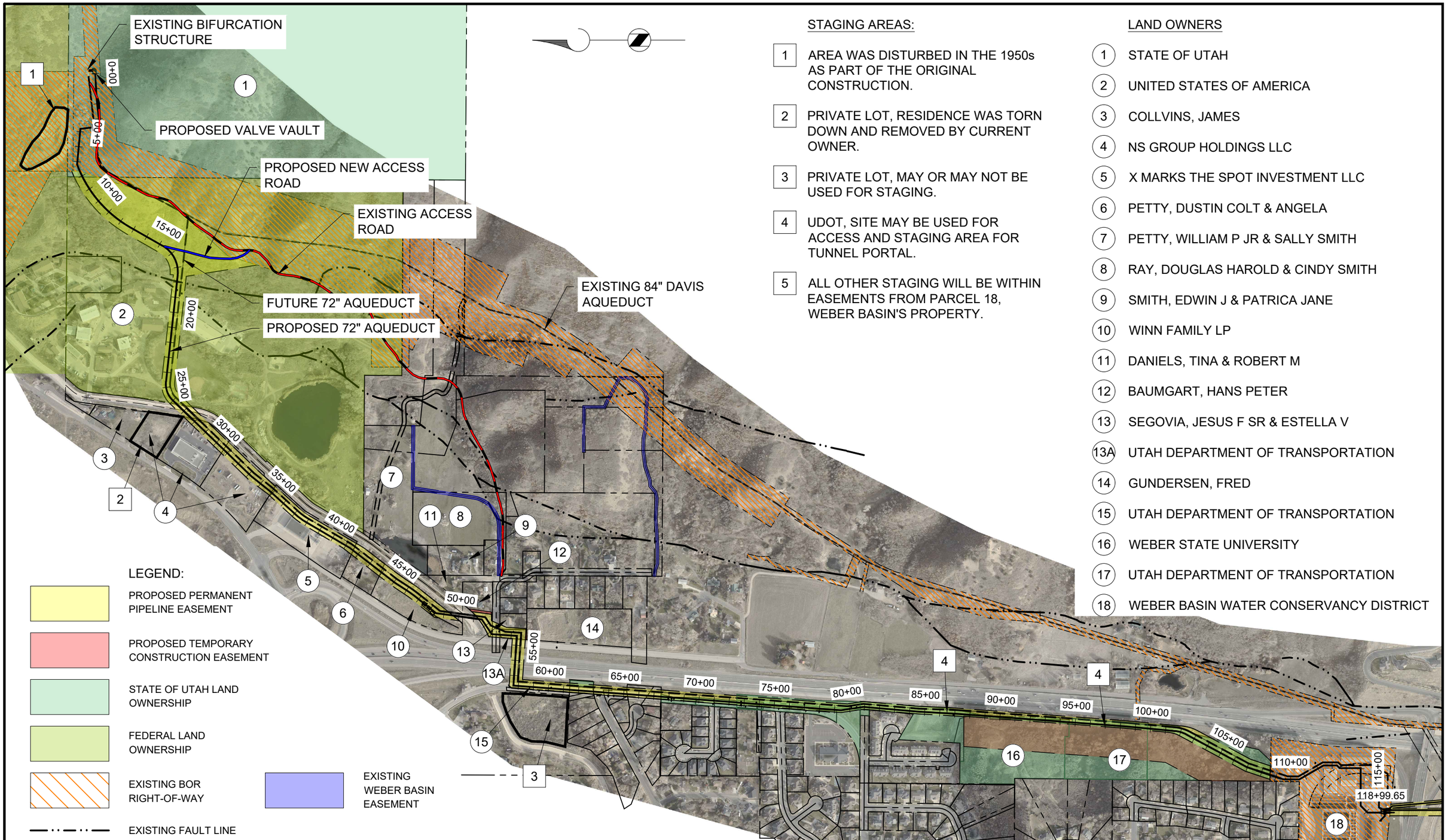

STAGING AREAS:

1. AREA WAS DISTURBED IN THE 1950s AS PART OF THE ORIGINAL CONSTRUCTION.
2. PRIVATE LOT, RESIDENCE WAS TORN DOWN AND REMOVED BY CURRENT OWNER.
3. PRIVATE LOT, MAY OR MAY NOT BE USED FOR STAGING.
4. UDOT, SITE MAY BE USED FOR ACCESS AND STAGING AREA FOR TUNNEL PORTAL.
5. ALL OTHER STAGING WILL BE WITHIN EASEMENTS FROM PARCEL 18, WEBER BASIN'S PROPERTY.

LAND OWNERS

1. STATE OF UTAH
2. UNITED STATES OF AMERICA
3. COLLVINS, JAMES
4. NS GROUP HOLDINGS LLC
5. X MARKS THE SPOT INVESTMENT LLC
6. PETTY, DUSTIN COLT & ANGELA
7. PETTY, WILLIAM P JR & SALLY SMITH
8. RAY, DOUGLAS HAROLD & CINDY SMITH
9. SMITH, EDWIN J & PATRICA JANE
10. WINN FAMILY LP
11. DANIELS, TINA & ROBERT M
12. BAUMGART, HANS PETER
13. SEGOVIA, JESUS F SR & ESTELLA V
13A. UTAH DEPARTMENT OF TRANSPORTATION
14. GUNDERSEN, FRED
15. UTAH DEPARTMENT OF TRANSPORTATION
16. WEBER STATE UNIVERSITY
17. UTAH DEPARTMENT OF TRANSPORTATION
18. WEBER BASIN WATER CONSERVANCY DISTRICT

Brown AND Caldwell

SCALE: 1" = 600'

152858

DATE: September 13, 2019

WBWCD DA REACH 1

PROPOSED PIPELINE ALIGNMENT
STA 0+00 TO 120+00 (OVERALL)

FIGURE

F1

Path: P:\Projects\Weber Basin\152858_DA Reach 1 Design And CM_CAD\03-AutoCAD\04-Civil3D\07-Figures File Name: FIGURE F1 Plot Date: September 13, 2019 10:09 AM Cadd User: David Davidse

WEBER
BASIN
WATER
CONSERVANCY
DISTRICT

WEBER BASIN WATER CONSERVANCY DISTRICT

2837 E HIGHWAY 193 | LAYTON, UTAH 84040

DAVIS AQUEDUCT REACH 1

NOT FOR
CONSTRUCTION

30% SUBMITTAL
SEPTEMBER 2019

Brown AND Caldwell

WBWCD Logo.jpg

Sep 12, 2019 - 2:51pm ddavidse
C:\cadtemp\Ac-Publish_13040\G-00-001.dwg

INDEX OF DRAWINGS

SHEET NUMBER	DRAWING NUMBER	DESCRIPTION
GENERAL		
	G-00-001	COVER
	G-00-002	INDEX OF DRAWINGS AND VICINITY MAP
	G-00-003	STANDARD SYMBOLS AND DESIGNATION SYSTEMS
	G-00-004	GENERAL NOTES
	G-00-005	STANDARD ABBREVIATIONS
CIVIL		
	C-00-100	SHEET INDEX LAYOUT
	C-00-101	AQUEDUCT PLAN & PROFILE STA 0+00 TO STA 8+00
	C-00-102	AQUEDUCT PLAN & PROFILE STA 8+00 TO STA 16+00
	C-00-103	AQUEDUCT PLAN & PROFILE STA 16+00 TO STA 24+00
	C-00-104	AQUEDUCT PLAN & PROFILE STA 24+00 TO STA 32+00
	C-00-105	AQUEDUCT PLAN & PROFILE STA 32+00 TO STA 39+50
	C-00-106	AQUEDUCT PLAN & PROFILE STA 39+50 TO STA 47+00
	C-00-107	AQUEDUCT PLAN & PROFILE STA 47+00 TO STA 56+00
	C-00-108	AQUEDUCT PLAN & PROFILE STA 56+00 TO STA 63+00
	C-00-109	AQUEDUCT PLAN & PROFILE STA 63+00 TO STA 72+00
	C-00-110	AQUEDUCT PLAN & PROFILE STA 72+00 TO STA 80+00
	C-00-111	AQUEDUCT PLAN & PROFILE STA 80+00 TO STA 88+00
	C-00-112	AQUEDUCT PLAN & PROFILE STA 88+00 TO STA 96+00
	C-00-113	AQUEDUCT PLAN & PROFILE STA 96+00 TO STA 103+50
	C-00-114	AQUEDUCT PLAN & PROFILE STA 103+50 TO STA 112+00
	C-00-115	AQUEDUCT PLAN & PROFILE STA 112+00 TO STA 118+99.65
	C-00-500	TRENCH DETAILS
	C-00-501	STEEL CASING DETAILS
	C-00-502	ACCESS MANHOLE DETAILS - 1
	C-00-503	ACCESS MANHOLE DETAILS - 2
	C-40-101	WEST VENT STRUCTURE SITE PLAN
STRUCTURAL		
	S-40-101	WEST VENT STRUCTURE
MECHANICAL		
	M-20-101	BIFURCATION VALVE VAULT - PLAN
	M-30-101	BLOWOFF VAULT
	M-30-102	BLOWOFF PUMP STATION
	M-30-103	FLOW METER VAULT
ELECTRICAL		
	E-00-001	ELECTRICAL DETAILS
INSTRUMENTATION		
	I-00-001	LEGENDS AND SYMBOLS - 1
	I-00-002	LEGENDS AND SYMBOLS - 2
	I-00-003	LEGENDS AND SYMBOLS - 3
	I-10-101	BIFURCATION P&ID
	I-20-101	MILITARY SPRINGS STRUCTURE
	I-30-101	BLOW OFF VALVE
	I-30-102	BLOW OFF VALVE
	I-40-101	WEST VENT STRUCTURE

VICINITY MAP

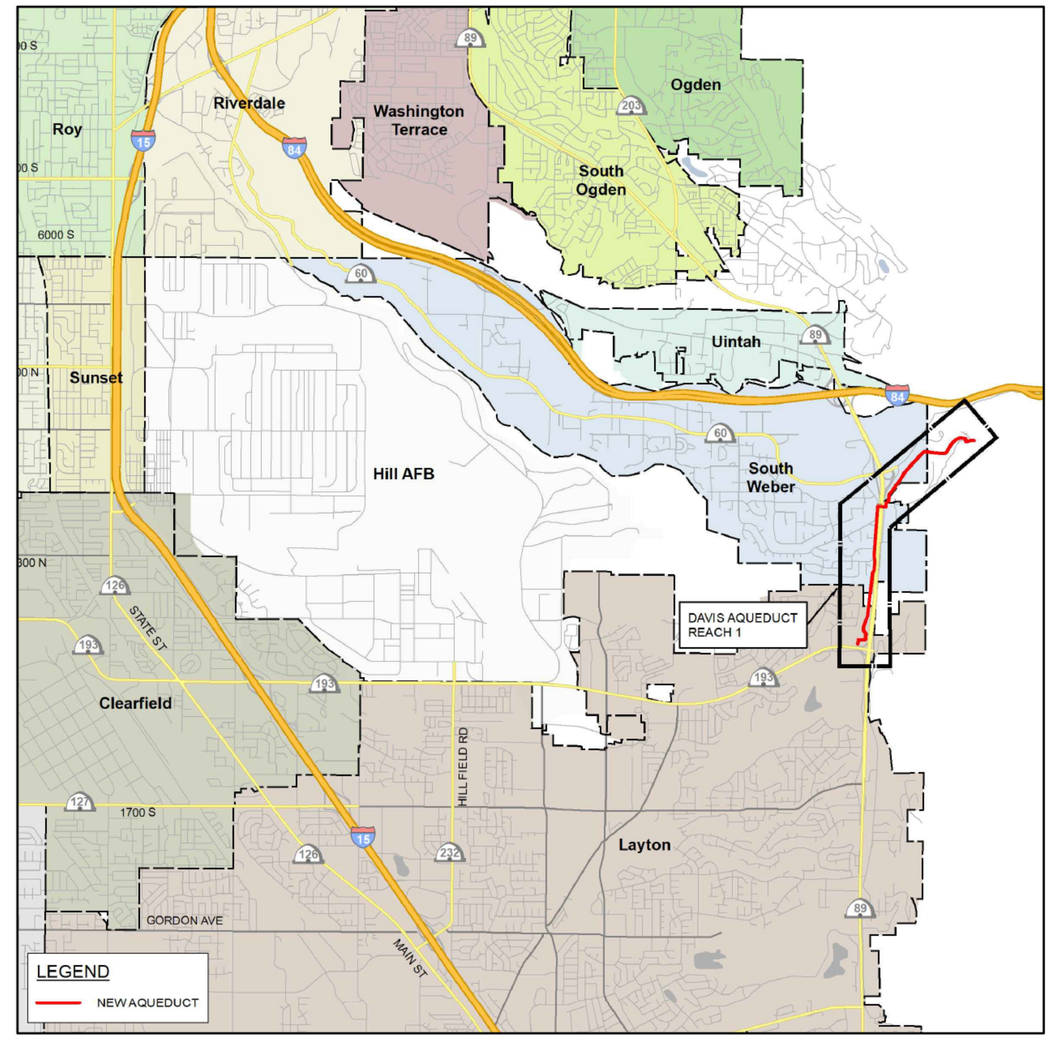

DRAWING AND FACILITY AREA DESIGNATION SYSTEMS

1. DRAWINGS ARE SUBDIVIDED BY DISCIPLINE AS FOLLOWS:

G	GENERAL
V	SURVEY
C	CIVIL
M	MECHANICAL
S	STRUCTURAL
E	ELECTRICAL
I	INSTRUMENTATION

2. DRAWINGS ARE SUBDIVIDED BY FACILITY AREA AS FOLLOWS:

00	GENERAL
10	BIFURCATION
20	MILITARY SPRINGS
30	BLOWOFF VAULT
40	WEST VENT STRUCTURE

Brown AND Caldwell
Brown & Caldwell
6975 Union Park Center
Salt Lake City, UT

30% DESIGN SUBMITTAL

WEBER BASIN WATER CONSERVANCY DISTRICT

DAVIS AQUEDUCT REACH 1

REVISIONS

REV	DATE	DESCRIPTION
•	•	••••
•	•	••••
•	•	••••
•	•	••••
•	•	••••
•	•	••••
•	•••	••
•	•	••••
•	•	••••

LINE IS 2 INCHES AT FULL SIZE

DESIGNED: ••
DRAWN: ••
CHECKED: ••
CHECKED: ••
APPROVED: ••

FILENAME
G-00-002.DWG

BC PROJECT NUMBER
152858

CLIENT PROJECT NUMBER
XXXXXXX

GENERAL

INDEX OF DRAWINGS AND VICINITY MAP

DRAWING NUMBER
G-00-002

SHEET NUMBER ---- OF XX

Path: P:\PROJECTS\WEBER BASIN\152858_DA REACH 1 DESIGN AND CM_CAD\03-AUTOCAD\04-CIVIL3D\02-SHEETS\G-GENERAL FILENAME: G-00-002.DWG PLOT DATE: 9/11/2019 11:38 AM CAD USER: DAVID DAVIDSE
VicinityMap.png
WBWCD Logo.jpg

GENERAL

- EXISTING EQUIPMENT OR MATERIALS TO BE REMOVED
- TO BE BUILT FOR FUTURE REMOVAL
- NEW FACILITIES (SOLID)
- EXISTING
- CITY BOUNDARY
- PROPERTY LINE, PHANTOM LINE OR MATCH LINE
- CENTERLINE
- HIDDEN LINE OR FUTURE IMPROVEMENTS
- FLUID SURFACE ELEVATION

@	AT
& OR |Z	AND
ø	ROUND OR DIAMETER
∠	ANGLE
℄	CENTER LINE
℘	PLATE OR PROPERTY LINE
(2)	KEY NOTE DESIGNATION
W/	WITH
W/O	WITHOUT

PROPOSED FACILITIES

- AQUEDUCT
- ACCESS MANHOLE
- VAULT STRUCTURE
- AIR VALVE
- TEST STATION
- BLOW OFF

CIVIL

- NATURAL GROUND OR GRADE
- STRUCTURAL FILL
- GRANULAR MATERIAL SUCH AS CRUSHED ROCK OR GRAVEL
- AC PAVEMENT IN SECTION
- EXISTING PAVEMENT IN PLAN
- PAVEMENT IN PLAN
- EXISTING CONCRETE IN PLAN
- CONCRETE IN PLAN
- GRAVEL IN PLAN
- 110 — FINISH GRADE CONTOURS
- 110 — EXISTING GRADE CONTOURS
- + 120.0 — EXISTING SPOT ELEVATION
- + 110.50 — FINISH GRADE SPOT ELEVATION
- 112.50 / 112.00 — TOP OF CURB ELEVATION / GUTTER OR GROUND ELEVATION

- EDGE OF WATER; FLOWLINE WITH DIRECTIONAL ARROW
- 3:1 OR 1 3 — SLOPE (3 HOR. TO 1 VERT.)
- CUT OR FILL SLOPE; ARROWS POINT DOWN SLOPE
- B9 — SOIL BORING AND DESIGNATION
- HYDRANT
- WATER VALVE
- WATER MANHOLE
- WATER METER
- SEWER MANHOLE
- SEWER CLEAN OUT
- STORM DRAIN MANHOLE
- CATCH BASIN
- STORM INLET (SQUARE)
- STORM INLET (ROUND)
- GAS MANHOLE
- GAS VALVE
- POWER POLE
- POWER POLE W/LIGHT
- LIGHT POLE
- GUY WIRE
- ELECTRIC MANHOLE
- ELECTRIC METER
- TELEPHONE MANHOLE
- TELEPHONE PEDESTAL

- CABLE BOX
- POT HOLE
- SURVEY MONUMENT
- SURVEY CONTROL POINT
- STREET SIGN
- HPG — EXISTING HIGH PRESSURE GAS
- G — EXISTING GAS
- SS — EXISTING SEWER
- UGTEL — EXISTING UNDERGROUND TELEPHONE/FIBER OPTIC
- W — EXISTING WATER
- SD — EXISTING STORM DRAIN
- OHP — EXISTING OVERHEAD POWER
- UGP — EXISTING UNDERGROUND POWER
- FO — EXISTING UNDERGROUND COMMUNICATIONS
- IRR — EXISTING IRRIGATION
- CTV — EXISTING CABLE TELEVISION
- PET — EXISTING PETROLEUM
- FENCE LINE
- EDGE OF ASPHALT

CROSS REFERENCING SYSTEM

1. PLAN TITLES:

PLAN
SCALE: 1/4" = 1'-0"
OVERALL SITE PLAN TITLE

2. SECTION CUTS:

X — SECTION NUMBER
GXXX — DRAWING WHERE SECTION IS SHOWN
SECTION

3. SECTIONS TITLES:

SECTION NUMBER TO BE CONSECUTIVE THROUGHOUT THE DRAWING SUB AREA

1 SECTION
C-00-500 SCALE: 1/8" = 1'-0"

4. DETAIL TITLES:

DETAIL LETTERS TO BE CONSECUTIVE THROUGHOUT THE DRAWING SUB AREA

A DETAIL
C-00-500 SCALE: 1/8" = 1'-0"

5. DETAIL CALLOUT:

A. BY CALLOUT

DETAIL LETTER TO BE CONSECUTIVE THROUGHOUT THE DRAWING SUB AREA

THE AREA TO BE DETAILED IS CIRCLED WITH A LEADER TO THE DETAIL CALLOUT.

B
SHEETNUMBER

DRAWING WHERE DETAIL IS FOUND

B. BY NOTE: "SEE DETAIL B/G-007"

- B IS DETAIL REFERENCE LETTER
- G-007 IS DRAWING WHERE DETAIL IS SHOWN

PIPING DESIGNATIONS

NEW PIPING

PIPING SYSTEM SYMBOL

12" SS

PIPE SIZE

EXISTING PIPING: 12" SS

FUTURE PIPING: 12" SS

SS SANITARY SEWER

NOTES:

1. THIS DRAWING IS GENERAL IN NATURE. SOME SYMBOLS SHOWN HEREON MAY NOT BE USED ON OTHER CONTRACT DRAWINGS.
2. SEE DRAWING G-003 FOR ABBREVIATIONS.
3. SYMBOLS ARE ARRANGED ON SPECIFIC DRAWINGS AND IN CATEGORIES FOR CONVENIENCE ONLY; SYMBOLS MAY BE USED ON ANY OF THE CONTRACT DRAWINGS.

Brown AND Caldwell
Brown & Caldwell
6975 Union Park Center
Salt Lake City, UT

30% DESIGN SUBMITTAL

WEBER BASIN WATER CONSERVANCY DISTRICT

DAVIS AQUEDUCT REACH 1

REVISIONS

REV	DATE	DESCRIPTION
-	-	-
-	-	-
-	-	-
-	-	-
-	-	-
-	-	-
-	-	-
-	-	-
-	-	-
-	-	-

LINE IS 2 INCHES AT FULL SIZE

DESIGNED: --
DRAWN: --
CHECKED: --
CHECKED: --
APPROVED: --

FILENAME G-00-003.DWG
BC PROJECT NUMBER 152858
CLIENT PROJECT NUMBER XXXXXXX

GENERAL

STANDARD SYMBOLS AND DESIGNATION SYSTEMS

DRAWING NUMBER
G-00-003

---- SHEET NUMBER OF XX

Path: P:\PROJECTS\WEBER BASIN\152858_DA REACH 1 DESIGN AND CM_CAD\03-AUTOCAD\04-CIVIL3D\02-SHEETS\G-GENERAL FILENAME: G-00-003.DWG PLOT DATE: 4/18/2019 8:49 AM CAD USER: DAVID DAVIDSE
WBWCD Logo.jpg

Brown AND Caldwell

Brown & Caldwell
6975 Union Park Center
Salt Lake City, UT

30% DESIGN SUBMITTAL

WEBER BASIN WATER CONSERVANCY DISTRICT

DAVIS AQUEDUCT
REACH 1

REVISIONS

REV	DATE	DESCRIPTION

LINE IS 2 INCHES
AT FULL SIZE

DESIGNED:
DRAWN:
CHECKED:
CHECKED:
APPROVED:

FILENAME
G-00-004.DWG

BC PROJECT NUMBER
152858

CLIENT PROJECT NUMBER
XXXXXXX

GENERAL

GENERAL NOTES

DRAWING NUMBER
G-00-004

SHEET NUMBER ---- OF XX

Path: P:\PROJECTS\WEBER BASIN\152858_DA REACH 1 DESIGN AND CMI_CAD\03-AUTOCAD\04-CIVIL3D\02-SHEETS\G-GENERAL FILENAME: G-00-004.DWG PLOT DATE: 4/18/2019 8:49 AM CAD USER: DAVID DAVIDSE

WBWCD Logo.jpg

- A -	
A/C	AIR CONDITIONING
AB	ANCHOR BOLT
ABAN	ABANDON
ABC	AGGREGATE BASE COURSE
ABS	ABSOLUTE
ABUT	ABUTMENT
ABV	ABOVE
AC	ASPHALTIC CONCRETE
ACKV	AUTOMATIC CHECK VALVE
ACP	ASBESTOS CEMENT PIPE
ACS	ACCESS
ADA	AMERICAN DISABILITY ACT
AD	AREA DRAIN
ADDL	ADDITIONAL
ADDM	ADDENDUM
ADJ	ADJUSTABLE
AGGR	AGGREGATE
AHD	AHEAD
AL	ALUMINUM
ALT	ALTERNATE
AMS	ANGLE METER STOP
AMT	AMOUNT
&	AND
ANSI	AMERICAN NATIONAL STANDARDS INSTITUTE
ANT	ANTENNA
AP	ACCESS PANEL
APN	ASSESSOR PARCEL NUMBER
APPROX	APPROXIMATE
APPVD	APPROVED
ASPH	ASPHALT
ASSN	ASSOCIATION
ASSY	ASSEMBLY
ASTM	AMERICAN SOCIETY OF TESTING MATERIALS
AUX	AUXILIARY
AV	AIR VENT/AIR VALVE
AVAR	AIR VACUUM AIR RELEASE VALVE
AVE	AVENUE
AWG	AMERICAN WIRE GAUGE
AWWA	AMERICAN WATER WORKS ASSOCIATION
- B -	
B/H	BUMPED HEAD
B&S	BELL & SPIGOT
BAL	BALANCE
BC	BOLT CIRCLE/BACK OF CURB
BCV	BUTTERFLY CHECK VALVE
BE	BELL END
BETW	BETWEEN
BFP	BACKFLOW PREVENTER
BFV	BUTTERFLY VALVE
BK	BOOK/BACK
BL-FLG	BLIND FLANGE
BLDG	BUILDING
BLK	BLOCK
BLM	BUREAU OF LAND MANAGEMENT
BLVD	BOULEVARD
BM	BENCHMARK
BO	BLOW OFF ASSEMBLY
BOC	BACK OF CURB
BOT	BOTTOM
BOW	BACK OF WALK
BPV	BACK PRESSURE VALVE
BRG	BEARING
BS	BACK SIGHT
BUR	BURIED
BV	BALL VALVE
BW	BOTH WAYS/BACK OF SIDEWALK
- C -	
C/C	CENTER TO CENTER
C	CONDUIT
C&G	CURB & GUTTER
CAL	CALIBRATE
CAP	CAPACITY
CAV	COMBINATION AIR VALVE
CB	CATCH BASIN
CEM	CEMENT
CI	CAST IRON
CIP	CAST IRON PIPE/CAST IN PLACE
CIR	CIRCLE
CIRCUM	CIRCUMFERENCE
CJP	COMPLETE JOINT PENETRATION
CL OR ℄	CENTERLINE
CL2	CHLORINE
CLG	CEILING
CLO	CLEANOUT
CLP	CLAMP
CLR	CLEAR
CLSM	CONTROLLED LOW STRENGTH MATERIAL
CM	CENTIMETER
CMP	CORRUGATED METAL PIPE
CMU	CONCRETE MASONRY UNIT
CO	COUNTY/COMPANY/CONTRACT
COL	COLUMN
COMB	COMBINATION
COMM	COMMUNICATION
COMPL	COMPLETE

- C - (CONT.)	
CON	CONCENTRIC
CONC	CONCRETE
CONN	CONNECTION
CONST	CONSTRUCTION
CONT	CONTINUE OR CONTINUOUS
CONTR	CONTRACTOR
COORD	COORDINATE
COR	CORNER
CORP STOP	CORPORATION STOP
COV PL	COVER PLATE
CPLG	COUPLING
CPVC	CHLORINATED POLYVINYL CHLORIDE PIPE
CT	COURT
CTR	CENTER
CTV	CABLE TELEVISION
CU	CUBIC/COPPER
CUST	CUSTOMER
CV	CONTROL VALVE
CW	CLOCKWISE
CY	CUBIC YARD
CYL	CYLINDER
- D -	
D OR △	DELTA ANGLE
D/W	DRIVEWAY
DEC	DECIMETER
DEMO	DEMOLITION
DEPT	DEPARTMENT
DET	DETAIL
DEV	DEVELOPMENT
DI	DROP INLET OR DUCTILE IRON
DIA OR Ø	DIAMETER
DIAG	DIAGONAL
DIM	DIMENSION
DIP	DUCTILE IRON PIPE
DIR	DIRECTION
DISCH	DISCHARGE
DIST	DISTANCE
DISTR	DISTRIBUTION
DIV	DIVISION
DL	DEAD LOAD
DMH	DROP MANHOLE
DN	DOWN
DR	DRIVE
DRW	DRY WELL
DUPL	DUPLICATE
DWG	DRAWING
- E -	
E	EAST OR EDGE
EA	EACH
EC	EPOXY COATED/END OF CURB
ECC	ECCENTRIC
EF	EACH FACE
EL	EPOXY LINED
ELEC	ELECTRICAL
ELEV	ELEVATION
ELL	ELBOW
ENG	ENGINE/ENGINEERING
ENGR	ENGINEER
EOP	EDGE OF PAVEMENT
EOS	EDGE OF SHOULDER
EQ	EQUAL OR EQUATION
EQ SP	EQUALLY SPACED
EQUIP	EQUIPMENT
EQUIV	EQUIVALENT
ESMT	EASEMENT
EST	ESTIMATE
ETC	ETCETERA
EW	EACH WAY
EXC	EXCAVATE
EXIST	EXISTING
EXP JT	EXPANSION JOINT
EXT	EXTENSION
- F -	
F/F	FACE TO FACE
FABR	FABRICATION/FABRICATED
FC	FACE OF CURB
FD	FLOOR DRAIN
FDN	FOUNDATION
FF	FINISHED FLOOR
FG	FINISHED GRADE
FH	FIRE HYDRANT
FIG	FIGURE
FL OR ℄	FLOW LINE
FLG	FLANGE
FLR	FLOOR
FMCT	FLOW METER COMPOUND TORRENT
FMH	FLEXIBLE METAL HOSE
FN	FENCE
FND	FOUND
FO	FIBER OPTIC
FOC	FACE OF CURB
FOW	FACE OF WALL
FPC	FLEXIBLE PIPE COUPLING
FPM	FEET PER MINUTE

- F - (CONT.)	
FPS	FEET PER SECOND
FPT	FEMALE PIPE THREAD
FREQ	FREQUENCY
FRP	FIRE RETARDANT POLYESTER RESIN/ FIBERGLASS REINFORCED POLYMER
FSTNR	FASTENER
FT	FOOT OR FEET
FTG	FOOTING
FUT	FUTURE
- G -	
G/B	GRADE BREAK
G	GAS
GA	GAGE
GAL(S)	GALLON(S)
GALV	GALVANIZED
GENL	GENERAL
GIS	GEOGRAPHIC INFORMATION SYSTEM
GND	GROUND
GPD	GALLONS PER DAY
GPH	GALLONS PER HOUR
GPM	GALLONS PER MINUTE
GRD	GRADE
GRT	GRATE
GV	GATE VALVE
- H -	
H	HOUSE
H&V	HEATING & VENTILATION
HARN	HIGH ACCURACY FREQUENCY NETWORK
HB	HOSE BIBB
HD	HEAD
HDR	HEADER
HEX	HEXAGONAL
HMWPE	HIGH MOLECULAR WEIGHT POLYETHYLENE
HORIZ	HORIZONTAL
HP	HORSEPOWER
HPI	HORIZONTAL POINT OF INTERSECTION
HPG	HIGH PRESSURE GAS
HR	HOUR
HT	HEIGHT
HV	HOSE VALVE
HWY	HIGHWAY
- I -	
ID	INSIDE DIAMETER
IN	INCH
INST	INSTALL
INSTR	INSTRUMENT
INSUL	INSULATION
INT	INTERIOR
INV	INVERT
IPS	IRON PIPE SIZE
IRR	IRRIGATION
- J -	
JT	JOINT
- K -	
kg	KILOGRAM
km	KILOMETER
- L -	
LAD	LADDER
LB OR #	POUND
LDR	LEADER
LEN OR L	LENGTH OF CURVATURE
LF	LINEAR FOOT
LG	LONG
LN	LANE
LT	LEFT/LIGHT
LWR	LOWER
- M -	
M	METER
MATL	MATERIAL
MAX	MAXIMUM
MC	MORTAR COATED
MEAS	MEASUREMENT
MECH	MECHANICAL
MFR	MANUFACTURER
MG	MILLION GALLONS
MGD	MILLION GALLONS PER DAY
MH	MANHOLE
MIN	MINIMUM
MISC	MISCELLANEOUS
MJ	MECHANICAL JOINT
MKR	MARKER
ML	MORTAR LINED
MLC	MORTAR LINED & COATED
MON	MONUMENT
MOV	MOTOR OPERATED VALVE
MPT	MALE PIPE THREAD
MSD	MAIN SERVICE DISTRIBUTION
MSDS	MATERIAL SAFETY DATA SHEET
MTD	MOUNTED

- N -	
N	NORTH
N/A	NOT APPLICABLE
NaOCL	SODIUM HYPOCHLORITE
NAVD	NORTH AMERICAN VERTICAL DATUM
NAP	NOT-A-PART
NBS	NATIONAL BUREAU OF STANDARDS
NC	NATIONAL COARSE
NE	NORTHEAST
NF	NORTH FACE
NFPA	NATIONAL FIRE PROTECTION ASSOCIATION
NG	NATURAL GROUND
NIC	NOT IN CONTRACT
NIP	NOT IN PROJECT
NO. #	NUMBER
NOM	NOMINAL
NPS	NOMINAL PIPE SIZE
NPT	NATIONAL TAPER PIPE THREAD
NRS	NON-RISING STEM
NTS	NOT TO SCALE
NW	NORTHWEST
- O -	
O/O	OUT TO OUT
OC	ON CENTER
OD	OUTSIDE DIAMETER
OF	OUTSIDE FACE
OFC	OFFICE
OH	OVER HEAD
OHP	OVER HEAD POWER
OHTEL	OVER HEAD TELEPHONE
OPER	OPERATOR
OPNG	OPENING
OPP	OPPOSITE
ORF	ORIFICE
ORIG	ORIGINAL
OS&Y	OUTSIDE SCREW & YOKE
OSHA	OCCUPATIONAL SAFETY AND HEALTH ADMINISTRATION
OVFL	OVERFLOW
oz	OUNCE
- P -	
P	POLE/PRESSURE/PIPE/POWER
P/L / ℙ	PROPERTY LINE
PAT	PATENT
PAVMT	PAVEMENT
PB	PULL BOX
PC	PRESSURE CLASS
PCCP	PRESTRESSED CONCRETE CYLINDER PIPE
PDL	PUMP DISCHARGE LINE
PE	PLAIN END/POLYETHYLENE PIPE
PED	PEDESTAL
PERM	PERMANENT
PERP	PERPENDICULAR
PG	PRESSURE GAGE
PH	PHASE
PI	POINT OF INTERSECTION
PHYD	POST HYDRANT
PKG	PACKAGE
PKWY	PARKWAY
PL	PLACE/PLATE/PARCEL LINE
PLS	PROFESSIONAL LAND SURVEYOR
PLT	PLATE (DRAWING)
PO	PUSH-ON
POLY	POLYETHYLENE
PP	POWER POLE
PPM	PARTS PER MILLION
PR	PAIR
P/R	PATENT RESERVATION
PRC	PRECAST REINFORCED CONCRETE
PRELIM	PRELIMINARY
PRIM	PRIMARY
PROP	PROPOSED
PRV	PRESSURE REGULATING VALVE
PS	PRESSURE SWITCH/PUMP STATION
PSF	POUNDS PER SQUARE FOOT
PSI	POUNDS PER SQUARE INCH
PT	POINT/POINT OF TANGENCY
PV	PLUG VALVE
PVC	POLYVINYL CHLORIDE PIPE
- Q -	
QCV	QUICK COUPLER VALVE
QDC	QUICK DISCONNECT COUPLING
QS	QUAD SHEET
QTR	QUARTER
QTY	QUANTITY

- R -	
R	RADIUS
(R)	RADIAL
R/W	RIGHT-OF-WAY
RCB	REINFORCED CONCRETE BOX
RCP	REINFORCED CONCRETE PIPE
RD	ROAD
REC	RECESSED
RECT	RECTANGULAR
RED	REDUCER
REF	REFERENCE (DIMENSION)
REG	REGULATING (REGULATOR)
REINF	REINFORCED (REBAR)
REQD	REQUIRED
RES	RESIDENTIAL OR RESERVOIR
RET	RETURN
REV	REVISION OR REVERSE
RF	RAISED FACE
RM	ROOM
RME	RESIDENTIAL MAIN EXTENSION
RPM	REVOLUTIONS PER MINUTE
RPS	REVOLUTIONS PER SECOND
RPPA	REDUCED PRESSURE PRINCIPLE ASSEMBLY
RR	RAILROAD
RSGV	RESILIENT SEATED GATE VALVE
RT	RIGHT/RING TITE
RV	RELIEF VALVE
- S -	
S	SOUTH/SLOPE
SA	SAMPLE LINE
S/C	SAW CUT
SCCP	STEEL CYLINDER CONCRETE PIPE
SCH	SCHEDULE
SD	STORM DRAIN
SDWK	SIDEWALK
SE	SOUTHEAST
SEC	SECTION/SECOND(ARY)
SEG	SEGMENT
SHLDR	SHOULDER
SHT	SHEET
SID	SPECIAL IMPROVEMENT DISTRICT
SIG	SIGNAL
SIM	SIMILAR
SL	SLOPE
SLV	SLEEVE
SO	STUBOUT
SPC	STATE PLANE COORDINATES
SPEC(S)	SPECIFICATION(S)
SQ	SQUARE
SQ FT	SQUARE FOOT (FEET)
SQ YD	SQUARE YARD
SR	SAMPLE RETURN
SRM	SINGLE RESIDENTIAL MAIN
SS	SANITARY SEWER
ST	STREET
STA	STATION
STD	STANDARD
STIR	STIRRUP
STL	STEEL
STLT	STREET LIGHT
SSTL	STAINLESS STEEL
SUPPL	SUPPLEMENT
SUR	SURVEY
SV	SOLENOID VALVE
SW	SIDEWALK OR SOUTHWEST
SY	SQUARE YARD
SYM	SYMBOL
SYMM	SYMMETRICAL
SYS	SYSTEM
- T -	
t	THICKNESS OF WELD
T	TELEPHONE/TANGENT
T&B	TOP & BOTTOM
T&G	TONGUE AND GROOVE
TAN	TANGENT
TBE	THREAD BOTH ENDS
TBM	TEMPORARY BENCH MARK
TC	TOP OF CURB
TD	TRENCH DRAIN
TDH	TOTAL DYNAMIC HEAD
TEMP	TEMPORARY
THK	THICK(NESS)
THR BLK	THRUST BLOCK
THRD	THREADED
TK	TANK
TMH	TOP OF MANHOLE
TOE	THREAD ONE END
TOF	TOP OF FOOTING
TOG	TOGETHER
TOGR	TOP OF GRATE
TOP	TOP OF PIPE

- T - (CONT.)	
TOR	TOP OF RIM
TOS	TOP OF SLAB
TOSTL	TOP OF STEEL
TOSW	TOP OF SIDEWALK
TOT	TOTAL
TOW	TOP OF WALL
TP	TELEPHONE POLE/TOP OF PIPE
TR	TRAIL OR TRACK/TOP OF RIM
TRANS	TRANSITION/TRANSMISSION
(TYP)	TYPICAL
- U -	
UDOT	UTAH DEPARTMENT OF TRANSPORTATION
UE	UNDERGROUND ELECTRIC
UFC	UNIFORM FIRE CODE
UG	UNDERGROUND
UGC	UNDERGROUND CONDUIT
UGP	UNDERGROUND POWER
UGT	UNDERGROUND TELEPHONE
UL	UNDERWRITERS LABORATORIES
UNC	AMERICAN STANDARD UNIFIED COARSE THREAD
UNF	AMERICAN STANDARD UNIFIED FINE THREAD
UNIV	UNIVERSAL
UNO	UNLESS NOTED OTHERWISE
UPC	UNIFORM PLUMBING CODE
UPRR	UNION PACIFIC RAILROAD
USGS	UNITED STATES GEODETIC SURVEY
UTIL	UTILITIES
- V -	
V	VOLT OR VALVE
VAC	VACUUM
VAR	VARIES
VB	VALVE BOX
VCP	VITRIFIED CLAY PIPE
VEL	VELOCITY
VENT	VENTILATOR
VERT	VERTICAL
VFD	VARIABLE FREQUENCY DRIVE
VG	VALLEY GUTTER
VHF	VERY HIGH FREQUENCY
VIB	VIBRATION
VIN	VINYL
VISC	VISCOSITY
VOL	VOLUME
VPI	VERTICAL POINT OF INTERSECTION
VS	VALVE SHEET
VT	VENT
- W -	
W/	WITH
W	WEST/WATER
W/O	WITHOUT
WD	WIDTH
WDN	WASTE DRAIN
WF	WIDE FLANGE
WH	WALL HYDRANT
WI	WROUGHT IRON
WL	WASTE LINE
WLD	WELDED
WM	WATER METER
WP	WORK POINT/WEATHER PROOF
WS	WATER SURFACE
WSP	WELDED STEEL PIPE
WSTP	WATER STOP
WT	WEIGHT
WTR	WATER
WV	WATER VALVE
WWF	WELDED WIRE FABRIC
WWM	WELDED WIRE MESH
- X -	
XARM	CROSS ARM
XFMR	TRANSFORMER
XFR	TRANSFER
XSEC	CROSS SECTION
- Y -	
YD	YARD
YH	YARD HYDRANT
YLD	YIELD

Brown AND Caldwell
Brown & Caldwell
6975 Union Park Center
Salt Lake City, UT

30% DESIGN SUBMITTAL

WEBER BASIN WATER CONSERVANCY DISTRICT

DAVIS AQUEDUCT REACH 1

REVISIONS

REV	DATE	DESCRIPTION

LINE IS 2 INCHES AT FULL SIZE

DESIGNED:
DRAWN:
CHECKED:
CHECKED:
APPROVED:

FILENAME G-00-005.DWG
BC PROJECT NUMBER 152858
CLIENT PROJECT NUMBER XXXXXXX

GENERAL

STANDARD ABBREVIATIONS

DRAWING NUMBER G-00-005

SHEET NUMBER ---- OF XX

Path: P:\PROJECTS\WEBER BASIN\152858_DA REACH 1 DESIGN AND CMI_CAD\03-AUTOCAD\04-CIVIL3D\02-SHEETS\G-GENERAL FILENAME: G-00-005.DWG PLOT DATE: 8/26/2019 1:56 PM CAD USER: DAVID DAVIDSE
WBWCD Logo.jpg

LEGEND:

- PROPOSED PERMANENT PIPELINE EASEMENT
- PROPOSED TEMPORARY CONSTRUCTION EASEMENT
- STATE OF UTAH LAND OWNERSHIP
- FEDERAL LAND OWNERSHIP
- EXISTING BOR RIGHT-OF-WAY
- EXISTING WEBER BASIN EASEMENT

0 200 400
SCALE IN FEET

Know what's below. Call 811 before you dig.
BLUE STAKES OF UTAH
UTILITY NOTIFICATION CENTER, INC.
www.bluestakes.org
1-800-662-4111

Brown AND Caldwell
Brown & Caldwell
6975 Union Park Center
Salt Lake City, UT

30% DESIGN SUBMITTAL

WEBER BASIN WATER CONSERVANCY DISTRICT

DAVIS AQUEDUCT REACH 1

REVISIONS

REV	DATE	DESCRIPTION
-	-	---
-	-	---
-	-	---
-	-	---
-	-	---
-	-	---
-	---	--
-	-	---
-	-	---

LINE IS 2 INCHES AT FULL SIZE

DESIGNED: --
DRAWN: --
CHECKED: --
CHECKED: --
APPROVED: --

FILENAME
C-00-100.DWG
BC PROJECT NUMBER
152858
CLIENT PROJECT NUMBER
XXXXXXX

CIVIL

SHEET INDEX LAYOUT

DRAWING NUMBER
C-00-100

SHEET NUMBER ---- OF XX

Path: P:\PROJECTS\WEBER BASIN\152858_DA REACH 1 DESIGN AND CM_CAD\03-AUTOCAD\04-DWG\C00-SHEETS\C-CIVIL FILENAME: C-00-100.DWG PLOT DATE: 9/13/2019 9:57 AM CAD USER: DAVID DAVIDSE

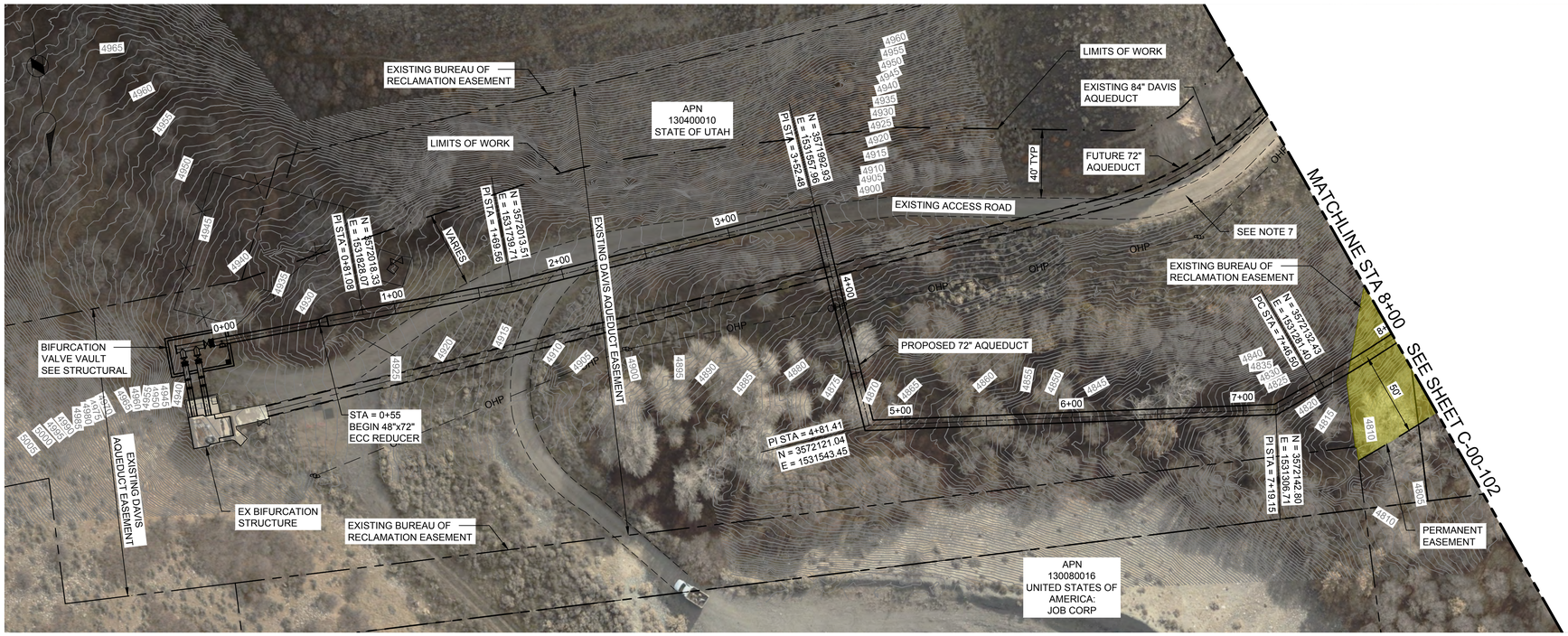

PLAN

SCALE: 1" = 40'

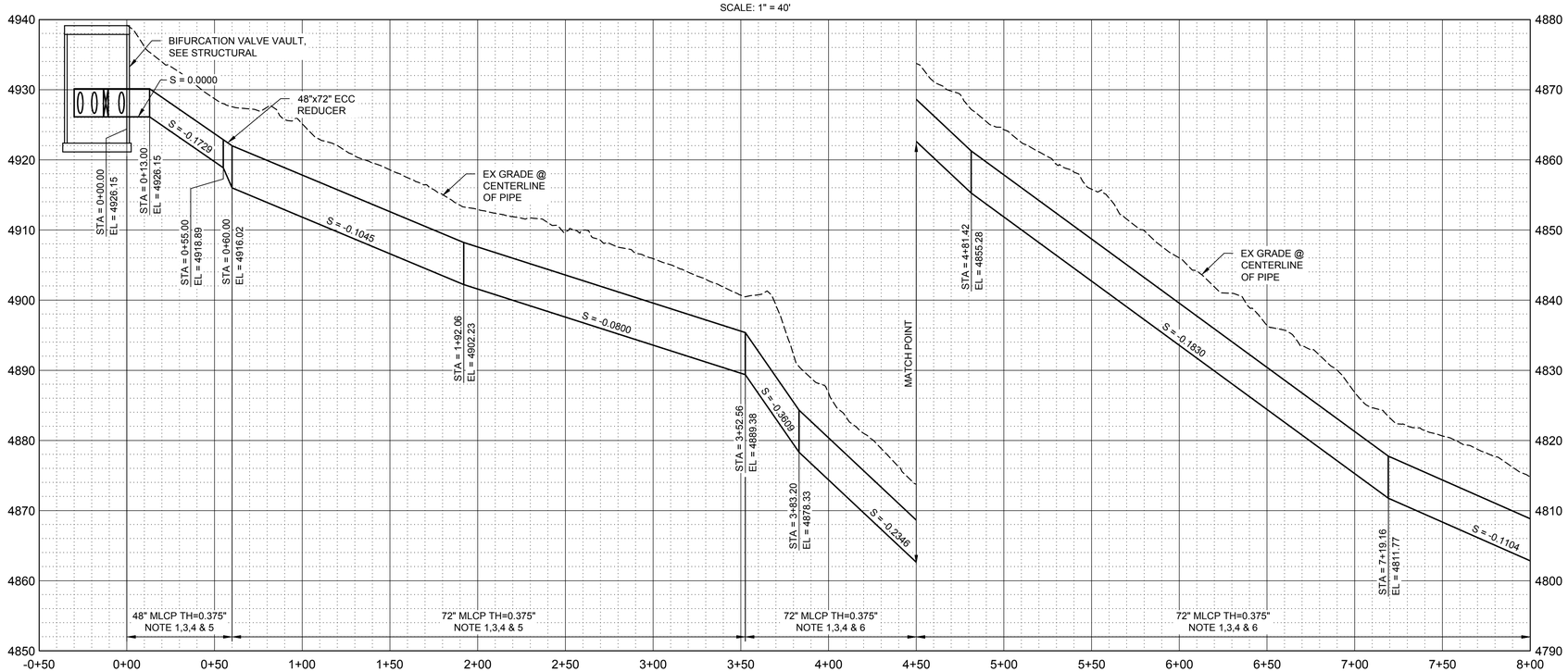

PROFILE

SCALE H: 1" = 40'
V: 1" = 10'

GENERAL NOTES:

1. WELDED STEEL PIPE SHALL HAVE DOUBLE WELDED LAP JOINTS AS SHOWN ON DETAIL X ON SHEET C-XXX.
2. WELDED STEEL PIPE SHALL HAVE FULL PENETRATION BUTT WELDS AS SHOWN ON DETAIL X ON SHEET C-XXX.
3. WELDED STEEL PIPE SHALL BE MORTAR LINED AND COATED IN ACCORDANCE WITH SPECIFICATION XXXX.
4. INSTALL TRENCH PLUG PER DETAIL 4 ON SHEET C-00-500. TRENCH PLUGS SHALL AT LOCATIONS WHERE THE SLOPE CHANGES MORE THAN 5 DEGREES AND BE SPACED ALONG THE SLOPE AS SPECIFIED BELOW:

SLOPE	SPACING
0 TO 5%	NO TRENCH PLUGS REQUIRED
5% TO 15%	150 FEET
15% TO 30%	100 FEET
30% OR MORE	50 FEET

5. SEE TRENCH DETAIL 1 ON SHEET C-00-500.
6. SEE TRENCH DETAIL 2 ON SHEET C-00-500.
7. VEHICLES CROSSING OVER EXISTING DAVIS AQUEDUCT #1 ARE RESTRICTED TO H20 ONLY.

KEY NOTES:

0 40 80 HORIZ SCALE IN FEET

0 10 20 VERT SCALE IN FEET

Know what's below. Call 811 before you dig.
BLUE STAKES OF UTAH
UTILITY NOTIFICATION CENTER, INC.
www.bluestakes.org
1-800-662-4111

Brown AND Caldwell
Brown & Caldwell
6975 Union Park Center
Salt Lake City, UT

30% DESIGN SUBMITTAL

WEBER BASIN WATER CONSERVANCY DISTRICT

DAVIS AQUEDUCT REACH 1

REVISIONS

REV	DATE	DESCRIPTION

LINE IS 2 INCHES AT FULL SIZE

DESIGNED:
DRAWN:
CHECKED:
CHECKED:
APPROVED:

FILENAME C-00-101.DWG
BC PROJECT NUMBER 152858
CLIENT PROJECT NUMBER XXXXXXX

CIVIL

AQUEDUCT PLAN & PROFILE STA 0+00 TO STA 8+00

DRAWING NUMBER
C-00-101

SHEET NUMBER ---- OF XX

Path: P:\PROJECTS\WEBER BASIN\152858_DA REACH 1 DESIGN AND CM_CAD\03-AUTOCAD\04-DWG\00-SHEETS\C-CIVIL FILENAME: C-00-101.DWG PLOT DATE: 9/11/2019 1:11 PM CAD USER: DAVID DAVIDSE
bg_logo.gif
Date: 2/14/2018
Time: 10:00 AM

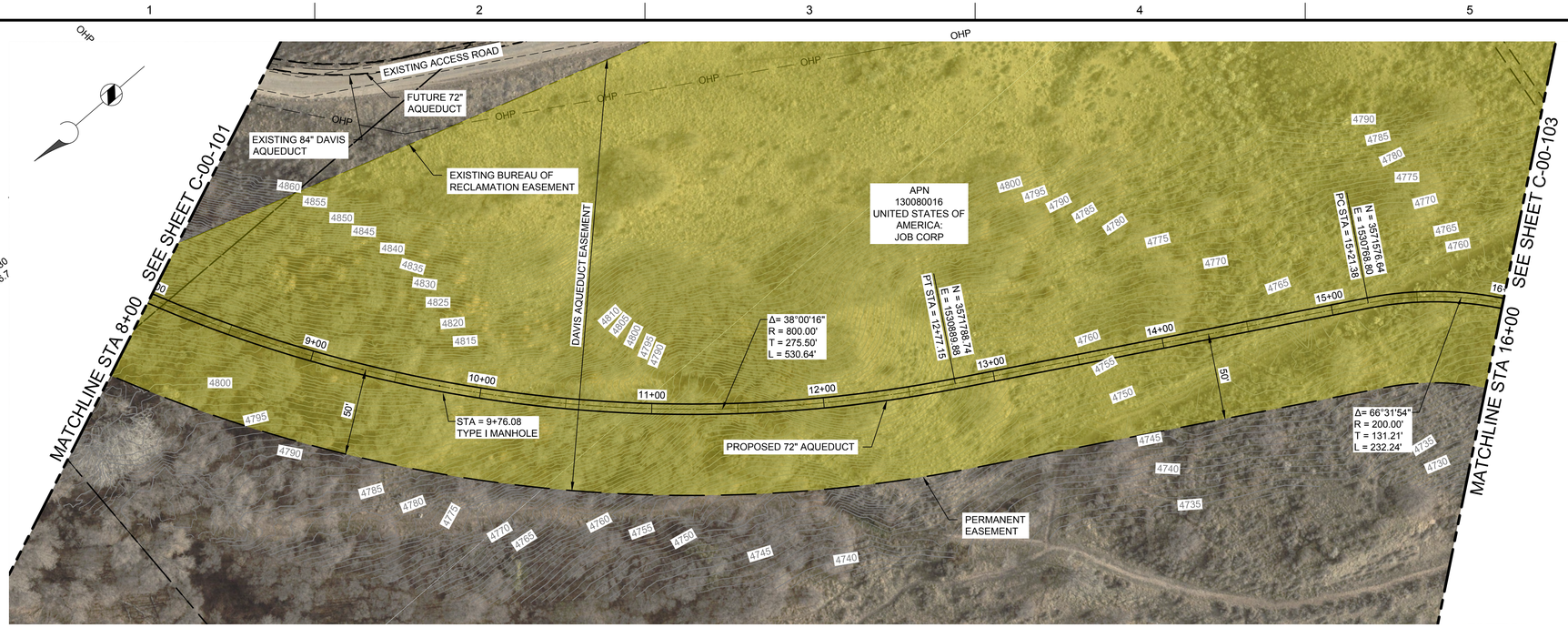

PLAN

SCALE: 1" = 40'

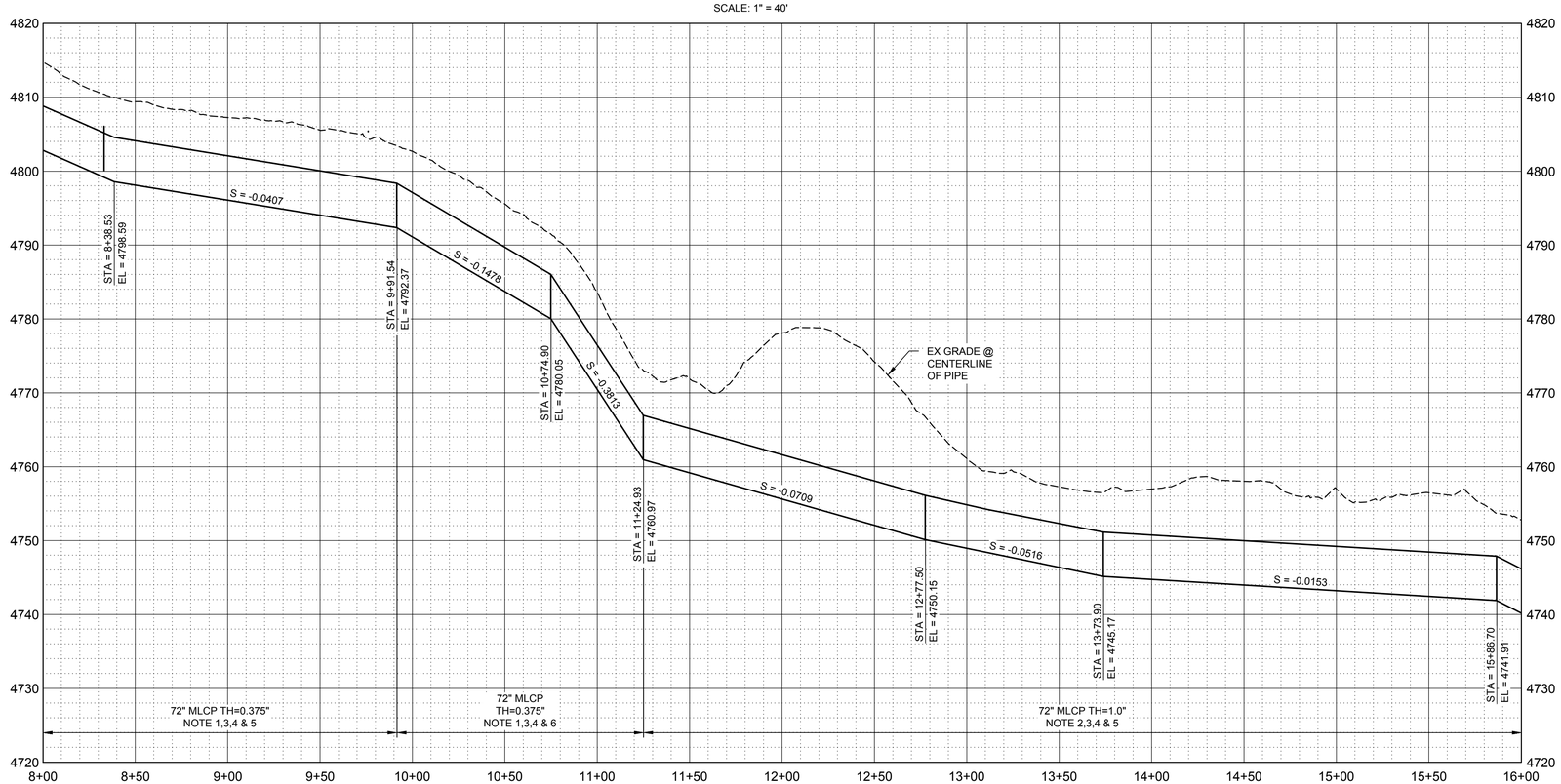

PROFILE

SCALE H: 1" = 40'
V: 1" = 10'

GENERAL NOTES:

1. WELDED STEEL PIPE SHALL HAVE DOUBLE WELDED LAP JOINTS AS SHOWN ON DETAIL X ON SHEET C-XXX.
2. WELDED STEEL PIPE SHALL HAVE FULL PENETRATION BUTT WELDS AS SHOWN ON DETAIL X ON SHEET C-XXX.
3. WELDED STEEL PIPE SHALL BE MORTAR LINED AND COATED IN ACCORDANCE WITH SPECIFICATION XXXX.
4. INSTALL TRENCH PLUG PER DETAIL 4 ON SHEET C-00-500. TRENCH PLUGS SHALL AT LOCATIONS WHERE THE SLOPE CHANGES MORE THAN 5 DEGREES AND BE SPACED ALONG THE SLOPE AS SPECIFIED BELOW:

SLOPE	SPACING
0 TO 5%	NO TRENCH PLUGS REQUIRED
5% TO 15%	150 FEET
15% TO 30%	100 FEET
30% OR MORE	50 FEET

5. SEE TRENCH DETAIL 1 ON SHEET C-00-500.
6. SEE TRENCH DETAIL 2 ON SHEET C-00-500.

KEY NOTES:

0 40 80 HORIZ SCALE IN FEET

0 10 20 VERT SCALE IN FEET

Know what's below. Call 811 before you dig.
BLUE STAKES OF UTAH
UTILITY NOTIFICATION CENTER, INC.
www.bluestakes.org
1-800-662-4111

Brown AND Caldwell
Brown & Caldwell
6975 Union Park Center
Salt Lake City, UT

30% DESIGN SUBMITTAL

WEBER BASIN WATER CONSERVANCY DISTRICT

DAVIS AQUEDUCT REACH 1

REVISIONS

REV	DATE	DESCRIPTION

LINE IS 2 INCHES AT FULL SIZE

DESIGNED:
DRAWN:
CHECKED:
CHECKED:
APPROVED:

FILENAME C-00-102.DWG
BC PROJECT NUMBER 152858
CLIENT PROJECT NUMBER XXXXXXXX

CIVIL

AQUEDUCT PLAN & PROFILE STA 8+00 TO STA 16+00

DRAWING NUMBER C-00-102

SHEET NUMBER ---- OF XX

Path: P:\PROJECTS\WEBER BASIN\152858_DA REACH 1 DESIGN AND CM_CAD\03-AUTOCAD\04-DWG_SHEETS\C-CIVIL FILENAME: C-00-102.DWG PLOT DATE: 9/11/2019 1:13 PM CAD USER: DAVID DAVIDSE
bs_logo.gif
DAVIS_1.jpg
WBWCD Logo.jpg

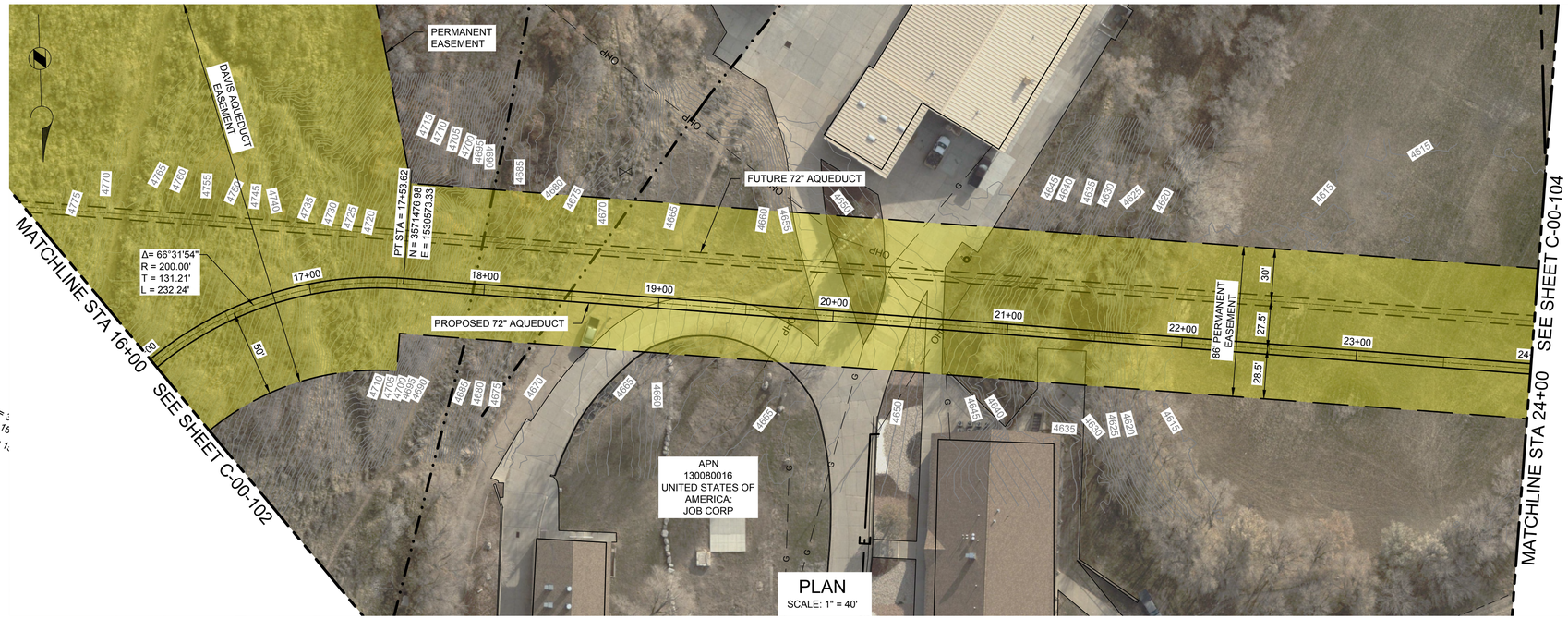

PLAN
SCALE: 1" = 40'

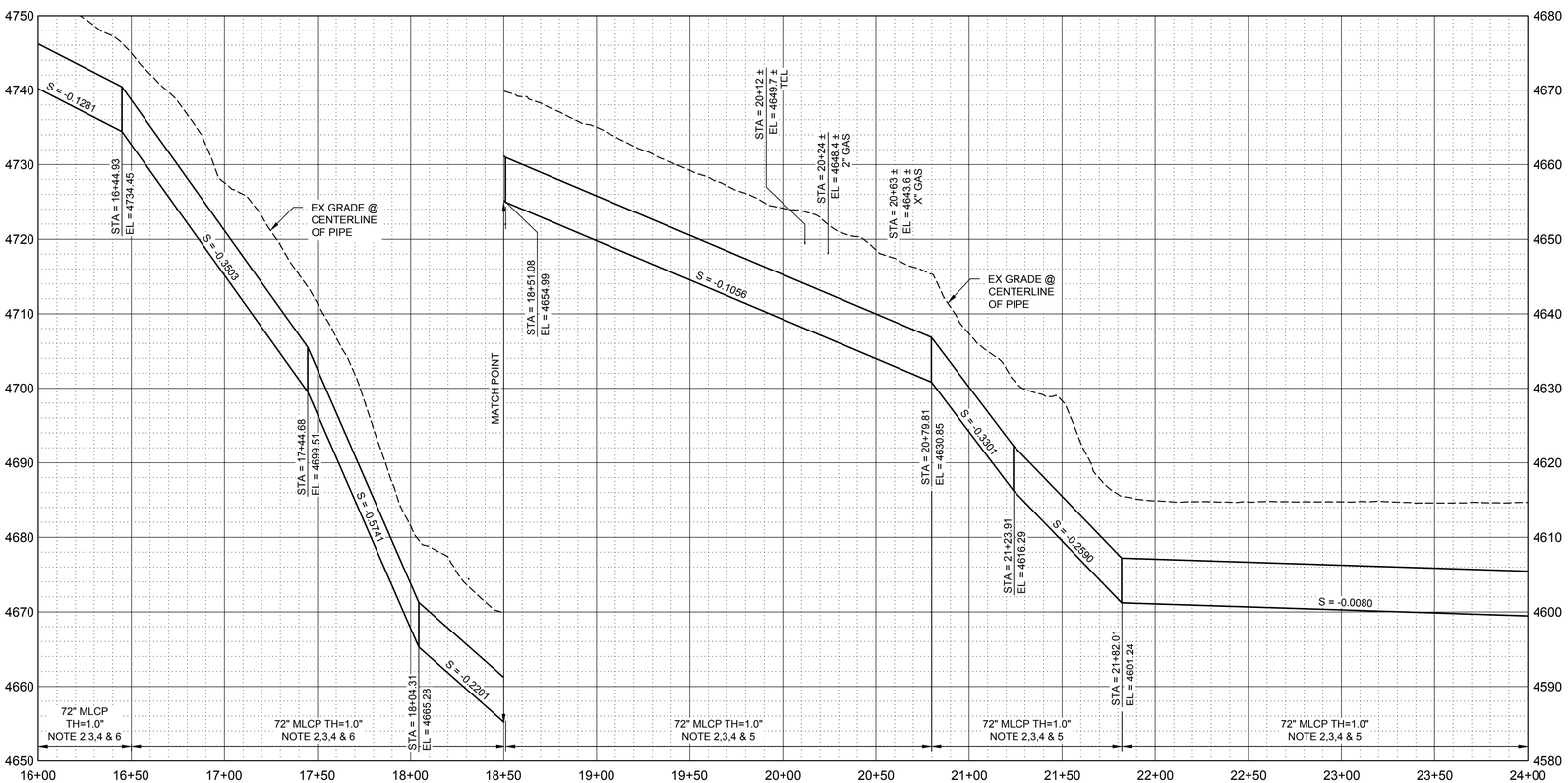

PROFILE
SCALE H: 1" = 40'
V: 1" = 10'

GENERAL NOTES:

1. WELDED STEEL PIPE SHALL HAVE DOUBLE WELDED LAP JOINTS AS SHOWN ON DETAIL X ON SHEET C-XXX.
2. WELDED STEEL PIPE SHALL HAVE FULL PENETRATION BUTT WELDS AS SHOWN ON DETAIL X ON SHEET C-XXX.
3. WELDED STEEL PIPE SHALL BE MORTAR LINED AND COATED IN ACCORDANCE WITH SPECIFICATION XXXX.
4. INSTALL TRENCH PLUG PER DETAIL 4 ON SHEET C-00-500. TRENCH PLUGS SHALL AT LOCATIONS WHERE THE SLOPE CHANGES MORE THAN 5 DEGREES AND BE SPACED ALONG THE SLOPE AS SPECIFIED BELOW:

SLOPE	SPACING
0 TO 5%	NO TRENCH PLUGS REQUIRED
5% TO 15%	150 FEET
15% TO 30%	100 FEET
30% OR MORE	50 FEET

5. SEE TRENCH DETAIL 1 ON SHEET C-00-500.
6. SEE TRENCH DETAIL 2 ON SHEET C-00-500.
7. CONTRACTOR SHALL PERFORM A PRE-CONSTRUCTION SURVEY FROM STA 17+50 TO STA 23+00 IN ACCORDANCE WITH SPECIFICATION XXXXX.

KEY NOTES:

0 40 80 HORIZ SCALE IN FEET

0 10 20 VERT SCALE IN FEET

Know what's below. Call 811 before you dig.
BLUE STAKES OF UTAH
UTILITY NOTIFICATION CENTER, INC.
www.bluestakes.org
1-800-662-4111

Brown AND Caldwell
Brown & Caldwell
6975 Union Park Center
Salt Lake City, UT

30% DESIGN SUBMITTAL

WEBER BASIN WATER CONSERVANCY DISTRICT

DAVIS AQUEDUCT REACH 1

REVISIONS

REV	DATE	DESCRIPTION

LINE IS 2 INCHES AT FULL SIZE

DESIGNED:
DRAWN:
CHECKED:
CHECKED:
APPROVED:

FILENAME
C-00-103.DWG
BC PROJECT NUMBER
152858
CLIENT PROJECT NUMBER
XXXXXXX

CIVIL

AQUEDUCT PLAN & PROFILE STA 16+00 TO STA 24+00

DRAWING NUMBER
C-00-103

SHEET NUMBER
---- OF XX

Path: P:\PROJECTS\WEBER BASIN\152858_DA REACH 1 DESIGN AND CM_CAD\03-AUTOCAD\04-DWG\00-SHEETS\C-CIVIL FILENAME: C-00-103.DWG PLOT DATE: 9/11/2019 12:02 PM CAD USER: DAVID DAVIDSE

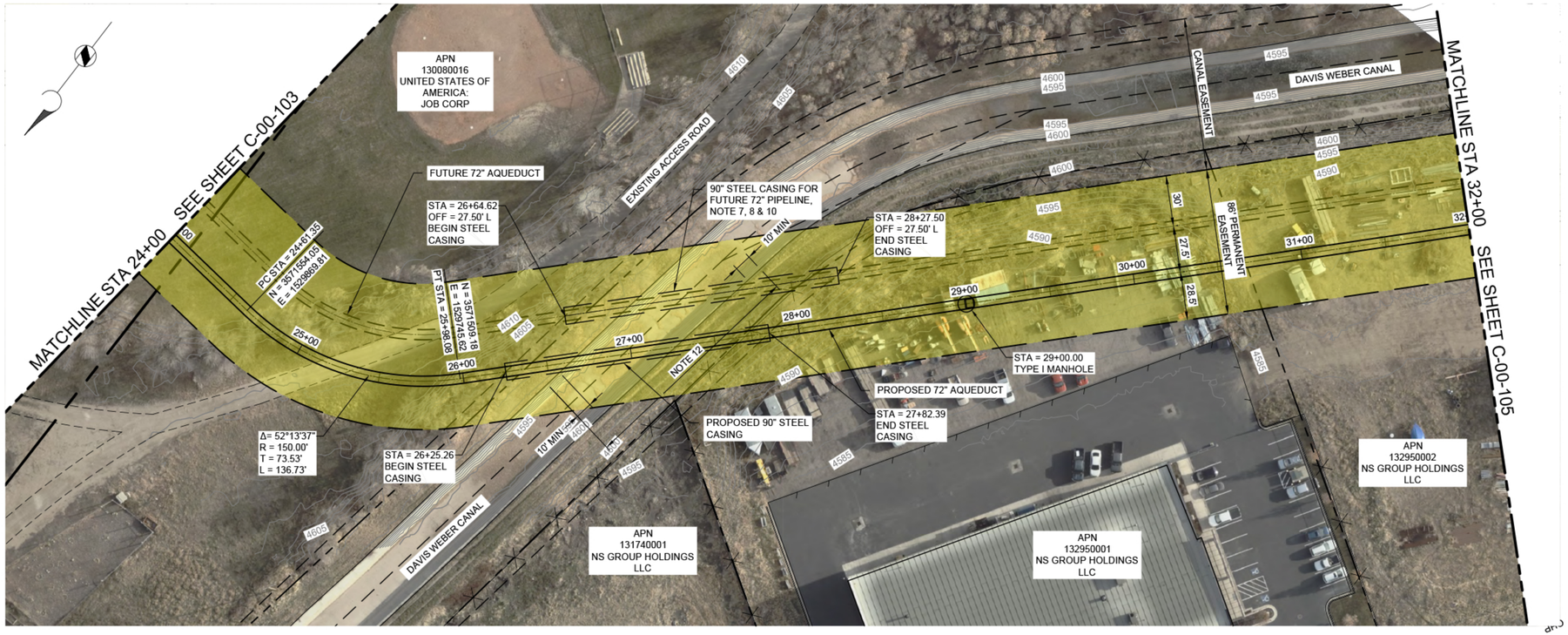

PLAN

SCALE: 1" = 40'

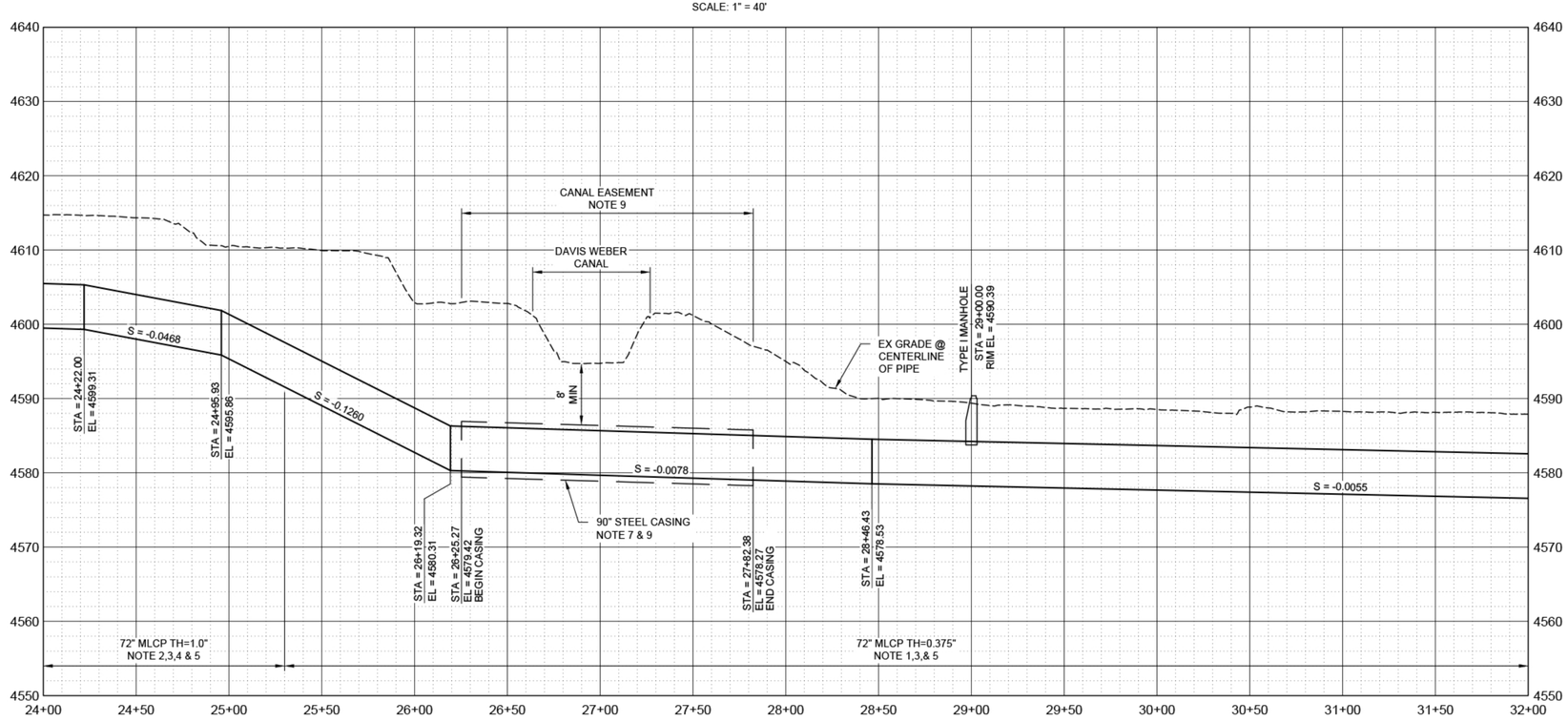

PROFILE

SCALE H: 1" = 40'

V: 1" = 10'

GENERAL NOTES:

1. WELDED STEEL PIPE SHALL HAVE DOUBLE WELDED LAP JOINTS AS SHOWN ON DETAIL X ON SHEET C-XXX.
2. WELDED STEEL PIPE SHALL HAVE FULL PENETRATION BUTT WELDS AS SHOWN ON DETAIL X ON SHEET C-XXX.
3. WELDED STEEL PIPE SHALL BE MORTAR LINED AND POLYURETHANE COATED IN ACCORDANCE WITH SPECIFICATION XXXX.
4. INSTALL TRENCH PLUG PER DETAIL 4 ON SHEET C-00-500. TRENCH PLUGS SHALL AT LOCATIONS WHERE THE SLOPE CHANGES MORE THAN 5 DEGREES AND BE SPACED ALONG THE SLOPE AS SPECIFIED BELOW:

SLOPE	SPACING
0 TO 5%	NO TRENCH PLUGS REQUIRED
5% TO 15%	150 FEET
15% TO 30%	100 FEET
30% OR MORE	50 FEET

5. SEE TRENCH DETAIL 1 ON SHEET C-00-500.
6. SEE TRENCH DETAIL 2 ON SHEET C-00-500.
7. CASING SHALL BE INSTALLED PER DETAIL 1 ON SHEET C-00-501.
8. SEE CASING SECTION A ON SHEET C-00-501.
9. CANAL SHALL BE RESTORED PER SPECIFICATIONS AND AS SHOWN ON SHEET XXX.
10. BULKHEAD SHALL BE SEALED WITH BRICK AND MORTAR WALLS AT EACH END OF THE CASING.
11. CONTRACTOR SHALL PERFORM A PRE-CONSTRUCTION SURVEY FROM STA 27+75 TO STA 88+00 IN ACCORDANCE WITH SPECIFICATION XXXXX.
12. DETERMINE CLOSEST CONSTRUCTION JOINT AT THIS LOCATION AND SAW CUT AND REMOVE THE CANAL LINING PRIOR TO EXCAVATION FOR PIPE AND STEEL CASING. THE CANAL LINING SHALL BE REINSTALLED IN ACCORDANCE WITH DRAWINGS.

KEY NOTES:

0 40 80 HORIZ SCALE IN FEET

0 10 20 VERT SCALE IN FEET

Know what's below. Call 811 before you dig.
BLUE STAKES OF UTAH
UTILITY NOTIFICATION CENTER, INC.
www.bluestakes.org
1-800-662-4111

Brown AND Caldwell
Brown & Caldwell
6975 Union Park Center
Salt Lake City, UT

30% DESIGN SUBMITTAL

WEBER BASIN WATER CONSERVANCY DISTRICT

DAVIS AQUEDUCT REACH 1

REVISIONS

REV	DATE	DESCRIPTION

LINE IS 2 INCHES AT FULL SIZE

DESIGNED:
DRAWN:
CHECKED:
CHECKED:
APPROVED:

FILENAME
C-00-104.DWG
BC PROJECT NUMBER
152858
CLIENT PROJECT NUMBER
XXXXXXX

CIVIL

AQUEDUCT PLAN & PROFILE STA 24+00 TO STA 32+00

DRAWING NUMBER
C-00-104

SHEET NUMBER ---- OF XX

Path: P:\PROJECTS\WEBER BASIN\152858_DA REACH 1 DESIGN AND CM_CAD\03-AUTOCAD\04-DRAWINGS\SHEETS\C-CIVIL FILENAME: C-00-104.DWG PLOT DATE: 9/11/2019 1:19 PM CAD USER: DAVID DAVIDSE

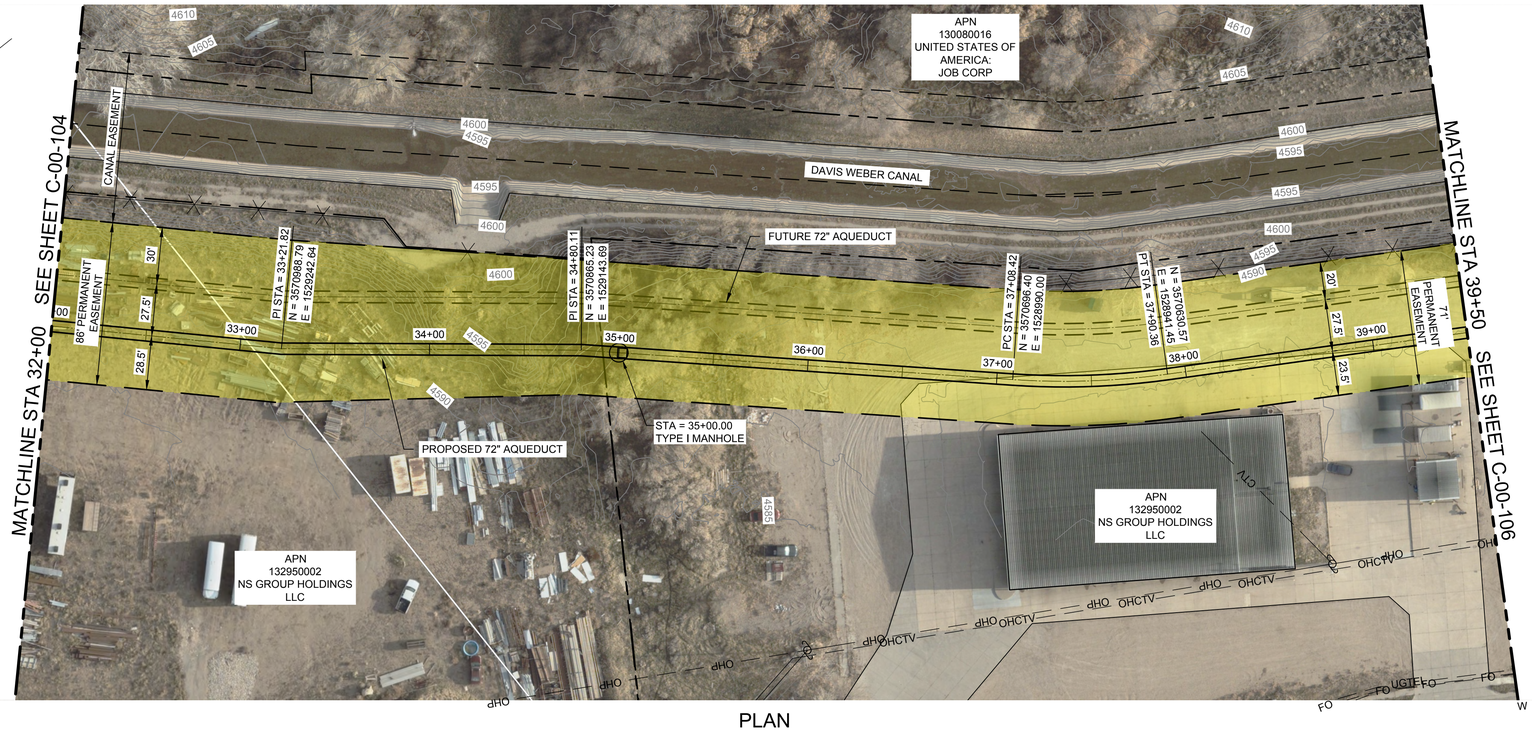

PLAN

SCALE: 1" = 40'

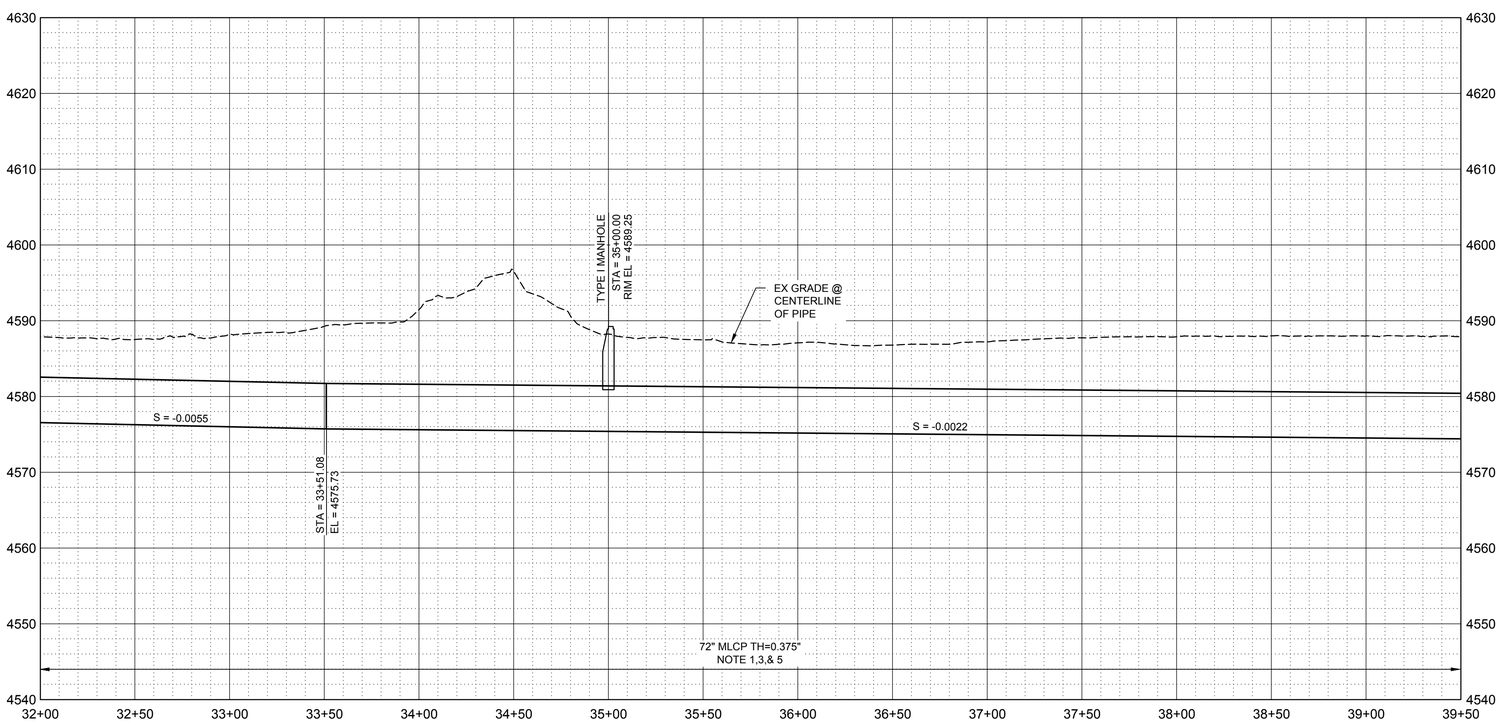

PROFILE

SCALE H: 1" = 40'

V: 1" = 10'

GENERAL NOTES:

1. WELDED STEEL PIPE SHALL HAVE DOUBLE WELDED LAP JOINTS AS SHOWN ON DETAIL X ON SHEET C-XXX.
2. WELDED STEEL PIPE SHALL HAVE FULL PENETRATION BUTT WELDS AS SHOWN ON DETAIL X ON SHEET C-XXX.
3. WELDED STEEL PIPE SHALL BE MORTAR LINED AND COATED IN ACCORDANCE WITH SPECIFICATION XXXX.
4. INSTALL TRENCH PLUG PER DETAIL 4 ON SHEET C-00-500. TRENCH PLUGS SHALL AT LOCATIONS WHERE THE SLOPE CHANGES MORE THAN 5 DEGREES AND BE SPACED ALONG THE SLOPE AS SPECIFIED BELOW:

SLOPE	SPACING
0 TO 5%	NO TRENCH PLUGS REQUIRED
5% TO 15%	150 FEET
15% TO 30%	100 FEET
30% OR MORE	50 FEET

5. SEE TRENCH DETAIL 1 ON SHEET C-00-500.
6. SEE TRENCH DETAIL 2 ON SHEET C-00-500.
7. CONTRACTOR SHALL PERFORM A PRE-CONSTRUCTION SURVEY FROM STA 27+75 TO STA 88+00 IN ACCORDANCE WITH SPECIFICATION XXXXX.

KEY NOTES:

0 40 80 HORIZ SCALE IN FEET

0 10 20 VERT SCALE IN FEET

Know what's below. Call 811 before you dig.
BLUE STAKES OF UTAH
UTILITY NOTIFICATION CENTER, INC.
www.bluestakes.org
1-800-662-4111

Brown AND Caldwell
Brown & Caldwell
6975 Union Park Center
Salt Lake City, UT

30% DESIGN SUBMITTAL

WEBER BASIN WATER CONSERVANCY DISTRICT

DAVIS AQUEDUCT REACH 1

REVISIONS

REV	DATE	DESCRIPTION

LINE IS 2 INCHES AT FULL SIZE

DESIGNED:
DRAWN:
CHECKED:
CHECKED:
APPROVED:

FILENAME
C-00-105.DWG
BC PROJECT NUMBER
152858
CLIENT PROJECT NUMBER
XXXXXXXX

CIVIL

AQUEDUCT PLAN & PROFILE STA 32+00 TO STA 39+50

DRAWING NUMBER
C-00-105

SHEET NUMBER ---- OF XX

Path: P:\PROJECTS\WEBER BASIN\152858_DA REACH 1 DESIGN AND CM_CAD\03-AUTOCAD\04-DWG\32-SHEETS\C-CIVIL FILENAME: C-00-105.DWG PLOT DATE: 9/11/2019 1:25 PM CAD USER: DAVID DAVIDSE
bs_logo.gif
Dave Davidse
WBWCD Logo.jpg

PLAN

SCALE: 1" = 40'

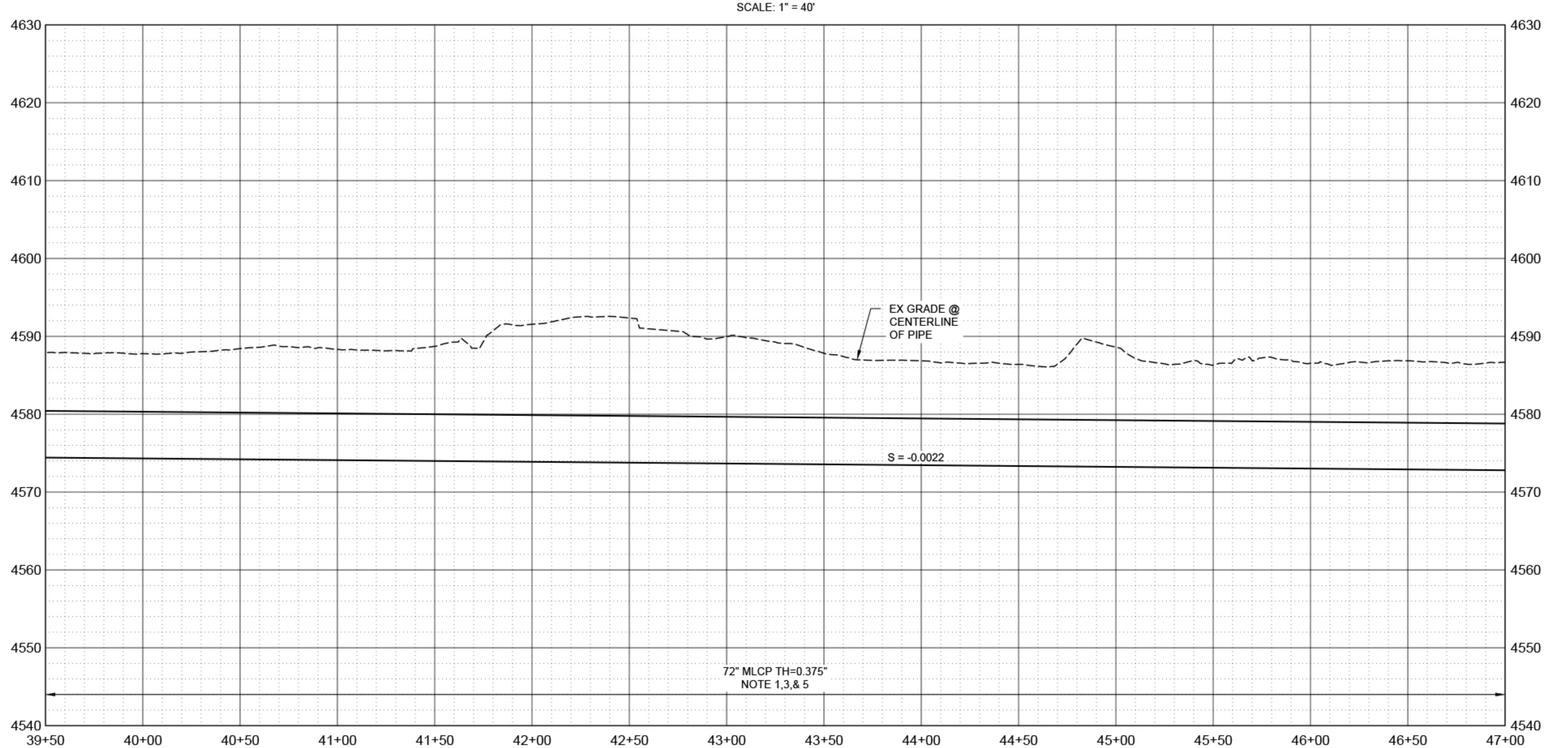

PROFILE

SCALE H: 1" = 40'

V: 1" = 10'

GENERAL NOTES:

1. WELDED STEEL PIPE SHALL HAVE DOUBLE WELDED LAP JOINTS AS SHOWN ON DETAIL X ON SHEET C-XXX.
2. WELDED STEEL PIPE SHALL HAVE FULL PENETRATION BUTT WELDS AS SHOWN ON DETAIL X ON SHEET C-XXX.
3. WELDED STEEL PIPE SHALL BE MORTAR LINED AND COATED IN ACCORDANCE WITH SPECIFICATION XXXX.
4. INSTALL TRENCH PLUG PER DETAIL 4 ON SHEET C-00-500. TRENCH PLUGS SHALL AT LOCATIONS WHERE THE SLOPE CHANGES MORE THAN 5 DEGREES AND BE SPACED ALONG THE SLOPE AS SPECIFIED BELOW:

SLOPE	SPACING
0 TO 5%	NO TRENCH PLUGS REQUIRED
5% TO 15%	150 FEET
15% TO 30%	100 FEET
30% OR MORE	50 FEET

5. SEE TRENCH DETAIL 1 ON SHEET C-00-500.
6. SEE TRENCH DETAIL 2 ON SHEET C-00-500.
7. CONTRACTOR SHALL PERFORM A PRE-CONSTRUCTION SURVEY FROM STA 27+75 TO STA 88+00 IN ACCORDANCE WITH SPECIFICATION XXXXX.

KEY NOTES:

0 40 80 HORIZ SCALE IN FEET

0 10 20 VERT SCALE IN FEET

Know what's below. Call 811 before you dig.
BLUE STAKES OF UTAH
UTILITY NOTIFICATION CENTER, INC.
www.bluestakes.org
1-800-662-4111

Brown AND Caldwell
Brown & Caldwell
6975 Union Park Center
Salt Lake City, UT

30% DESIGN SUBMITTAL

WEBER BASIN WATER CONSERVANCY DISTRICT

DAVIS AQUEDUCT REACH 1

REVISIONS

REV	DATE	DESCRIPTION
•	•	••••
•	•	••••
•	•	••••
•	•	••••
•	•	••••
•	•	••••
•	•••	••
•	•	••••
•	•	••••

LINE IS 2 INCHES AT FULL SIZE

DESIGNED: ••
DRAWN: ••
CHECKED: ••
CHECKED: ••
APPROVED: ••

FILENAME
C-00-106.DWG

BC PROJECT NUMBER
152858

CLIENT PROJECT NUMBER
XXXXXXX

CIVIL

AQUEDUCT PLAN & PROFILE STA 39+50 TO STA 47+00

DRAWING NUMBER
C-00-106

SHEET NUMBER ---- OF XX

Path: P:\PROJECTS\WEBER BASIN\152858_DA REACH 1 DESIGN AND CM_CAD\03-AUTOCAD\04-DWG\SHEETS\C-CIVIL FILENAME: C-00-106.DWG PLOT DATE: 9/11/2019 1:28 PM CAD USER: DAVID DAVIDSE
bs_logo.gif
DAR_2-1.sst
DAR_2-1.pmp
WBWCD Logo.jpg

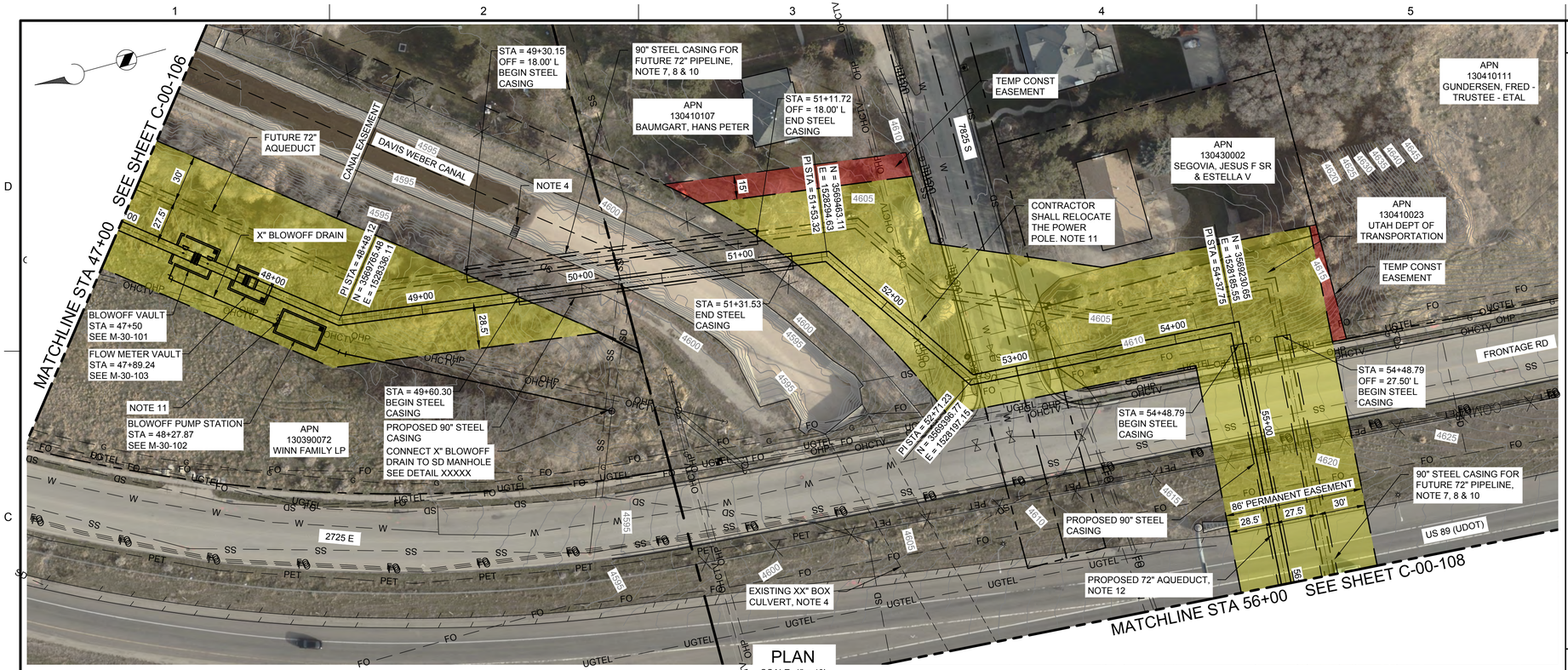

PLAN

SCALE: 1" = 40'

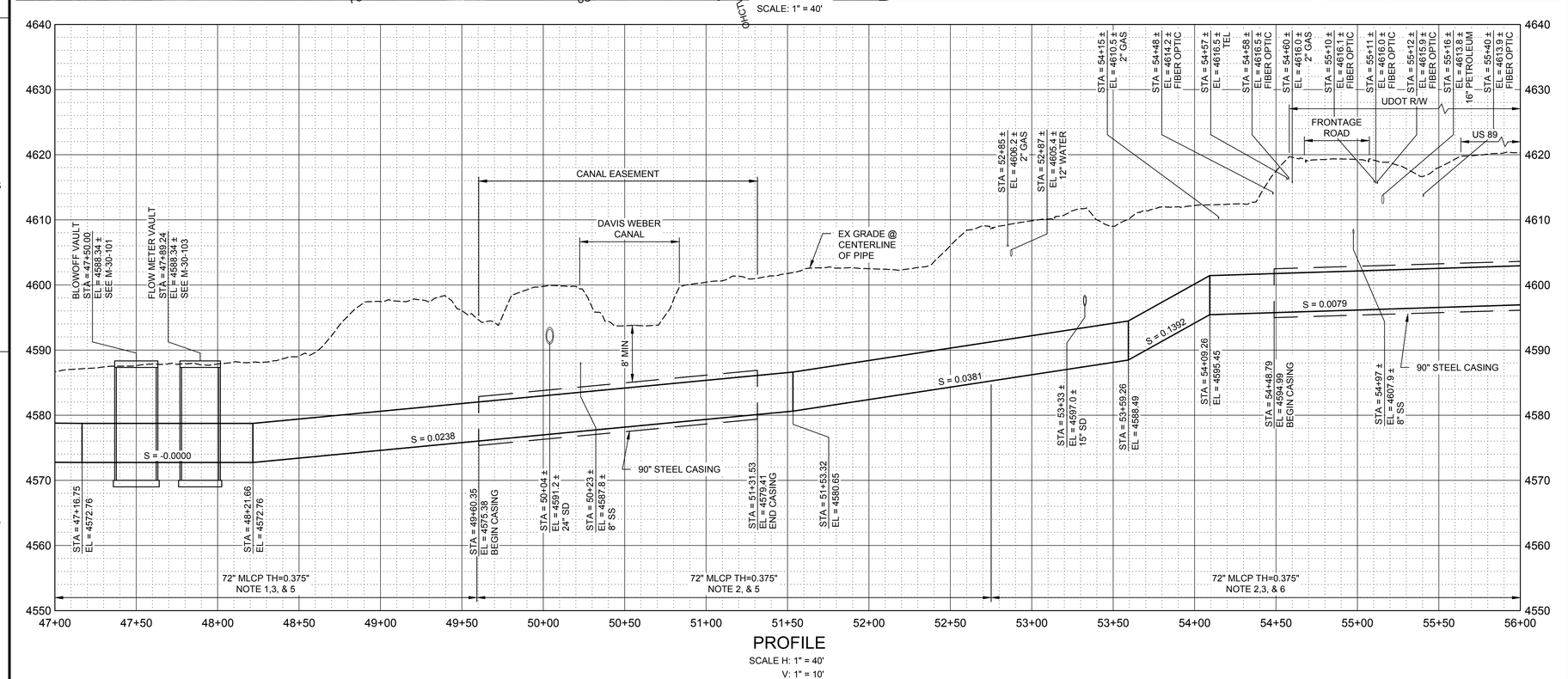

PROFILE

SCALE H: 1" = 40'
V: 1" = 10'

GENERAL NOTES:

1. WELDED STEEL PIPE SHALL HAVE DOUBLE WELDED LAP JOINTS AS SHOWN ON DETAIL X ON SHEET C-XXX.
2. WELDED STEEL PIPE SHALL HAVE FULL PENETRATION BUTT WELDS AS SHOWN ON DETAIL X ON SHEET C-XXX.
3. WELDED STEEL PIPE SHALL BE MORTAR LINED AND POLYURETHANE COATED IN ACCORDANCE WITH SPECIFICATION XXXX.
4. CONTRACTOR SHALL PROTECT EXISTING PIPE FOR CANAL IN PLACE.
5. SEE TRENCH DETAIL 1 ON SHEET C-00-500.
6. SEE TRENCH DETAIL 3 ON SHEET C-00-500.
7. SEE CASING SECTION A ON SHEET C-00-501.
8. PROFILE FOR CASING IS SHOWN ON DETAIL A ON SHEET C-XXX.
9. CANAL SHALL BE RESTORED PER SPECIFICATIONS AND AS SHOWN ON SHEET XXX.
10. BULKHEAD SHALL BE SEALED WITH BRICK AND MORTAR WALLS AT EACH END OF THE CASING.
11. THE CONTRACTOR SHALL SUBMIT RELOCATION PLANS AND SPECIFICATION TO THE ENGINEER AND ROCKY MOUNTAIN POWER COMPANY FOR APPROVAL OF POWER POLE RELOCATION.
12. CONTRACTOR SHALL COORDINATE CONSTRUCTION ACROSS US 89 IN ACCORDANCE WITH THE SPECIFICATIONS AND UDOT.
13. CONTRACTOR SHALL PERFORM A PRE-CONSTRUCTION SURVEY FROM STA 27+75 TO STA 88+00 IN ACCORDANCE WITH SPECIFICATION XXXXX.

KEY NOTES:

0 40 80 HORIZ SCALE IN FEET

0 10 20 VERT SCALE IN FEET

Know what's below. Call 811 before you dig.
BLUE STAKES OF UTAH
UTILITY NOTIFICATION CENTER, INC.
www.bluestakes.org
1-800-662-4111

Brown AND Caldwell
Brown & Caldwell
6975 Union Park Center
Salt Lake City, UT

30% DESIGN SUBMITTAL

WEBER BASIN WATER CONSERVANCY DISTRICT

DAVIS AQUEDUCT REACH 1

REVISIONS

REV	DATE	DESCRIPTION

LINE IS 2 INCHES AT FULL SIZE

DESIGNED:
DRAWN:
CHECKED:
CHECKED:
APPROVED:

FILENAME
C-00-107.DWG
BC PROJECT NUMBER
152858
CLIENT PROJECT NUMBER
XXXXXXX

CIVIL

AQUEDUCT PLAN & PROFILE STA 47+00 TO STA 56+00

DRAWING NUMBER
C-00-107

SHEET NUMBER ---- OF XX

Path: P:\PROJECTS\WEBER BASIN\152858_DA REACH 1 DESIGN AND CM_CAD\03-AUTOCAD\04-DWG\C-00-SHEETS\C-CIVIL FILENAME: C-00-107.DWG PLOT DATE: 9/11/2019 2:48 PM CAD USER: DAVID DAVIDSE
bs_logo.gif
DAVIS.shx
WBWCD Logo.jpg

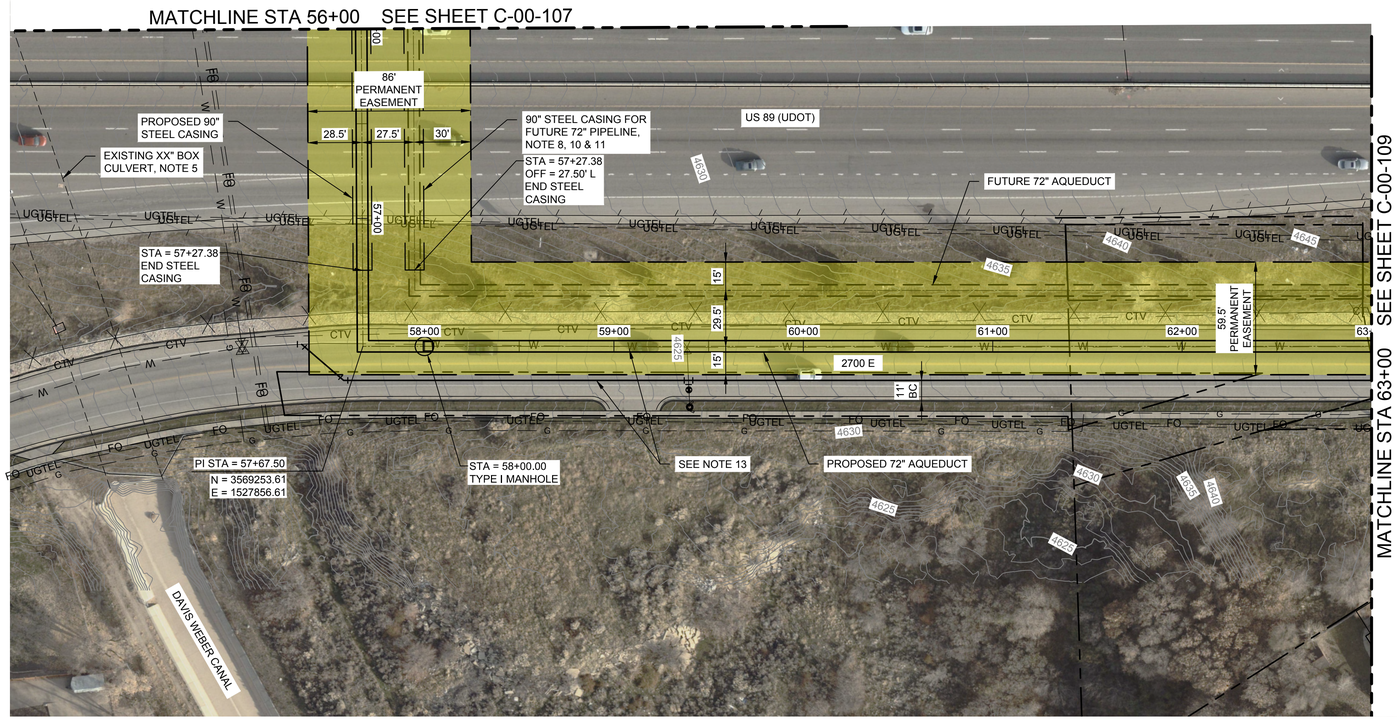

PLAN

SCALE: 1" = 40'

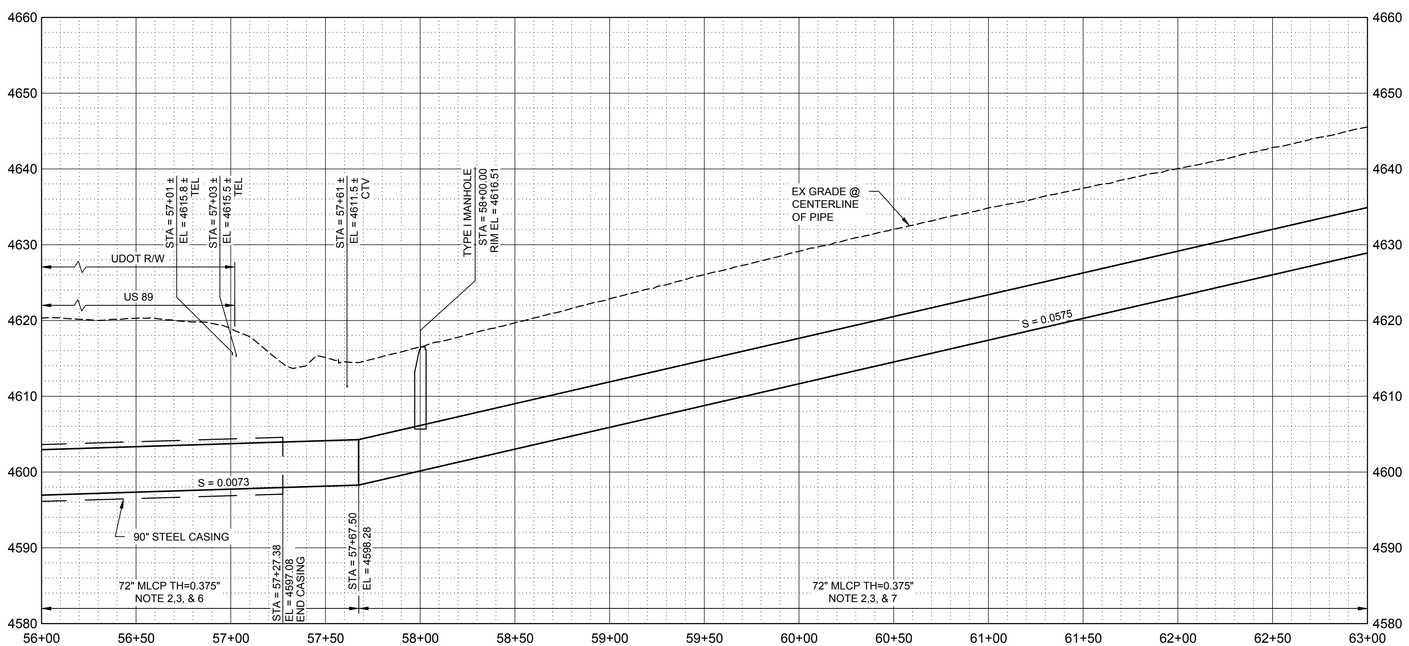

PROFILE

SCALE H: 1" = 40'
V: 1" = 10'

GENERAL NOTES:

1. WELDED STEEL PIPE SHALL HAVE DOUBLE WELDED LAP JOINTS AS SHOWN ON DETAIL X ON SHEET C-XXX.
2. WELDED STEEL PIPE SHALL HAVE FULL PENETRATION BUTT WELDS AS SHOWN ON DETAIL X ON SHEET C-XXX.
3. WELDED STEEL PIPE SHALL BE MORTAR LINED AND COATED IN ACCORDANCE WITH SPECIFICATION XXXX.
4. FOR PAVING DETAILS SEE DETAIL B ON SHEET C-XXX.
5. CONTRACTOR SHALL PROTECT EXISTING PIPE FOR CANAL IN PLACE.
6. FOR TRENCH OF HIGHWAY CROSSING SEE DETAIL 3 ON SHEET C-00-500.
7. FOR TRENCH IN CITY STREET SEE DETAIL 3 ON SHEET C-00-500.
8. BULKHEAD SHALL BE SEALED WITH BRICK AND MORTAR WALLS AT EACH END OF THE CASING.
9. CONTRACTOR SHALL COORDINATE CONSTRUCTION ACROSS US 89 IN ACCORDANCE WITH THE SPECIFICATIONS AND UDOT.
10. SEE CASING SECTION A ON SHEET C-00-501.
11. PROFILE FOR CASING IS SHOWN ON DETAIL A ON SHEET C-XXX.
12. CONTRACTOR SHALL PERFORM A PRE-CONSTRUCTION SURVEY FROM STA 27+75 TO STA 88+00 IN ACCORDANCE WITH SPECIFICATION XXXXX.
13. X" WATER LINE SHALL BE RELOCATED PRIOR TO INSTALLING THE 72" PIPELINE.

KEY NOTES:

0 40 80 HORIZ SCALE IN FEET

0 10 20 VERT SCALE IN FEET

Know what's below. Call 811 before you dig.
BLUE STAKES OF UTAH
UTILITY NOTIFICATION CENTER, INC.
www.bluestakes.org
1-800-662-4111

Brown AND Caldwell
Brown & Caldwell
6975 Union Park Center
Salt Lake City, UT

30% DESIGN SUBMITTAL

WEBER BASIN WATER CONSERVANCY DISTRICT

DAVIS AQUEDUCT REACH 1

REVISIONS

REV	DATE	DESCRIPTION

LINE IS 2 INCHES AT FULL SIZE

DESIGNED:
DRAWN:
CHECKED:
CHECKED:
APPROVED:

FILENAME
C-00-108.DWG

BC PROJECT NUMBER
152858

CLIENT PROJECT NUMBER
XXXXXXX

CIVIL

AQUEDUCT PLAN & PROFILE STA 56+00 TO STA 63+00

DRAWING NUMBER
C-00-108

SHEET NUMBER ---- OF XX

Path: P:\PROJECTS\WEBER BASIN\152858_DA REACH 1 DESIGN AND CM_CAD\03-AUTOCAD\04-CIVIL\00-SHEETS\C-CIVIL FILENAME: C-00-108.DWG PLOT DATE: 9/11/2019 2:53 PM CAD USER: DAVID DAVIDSE

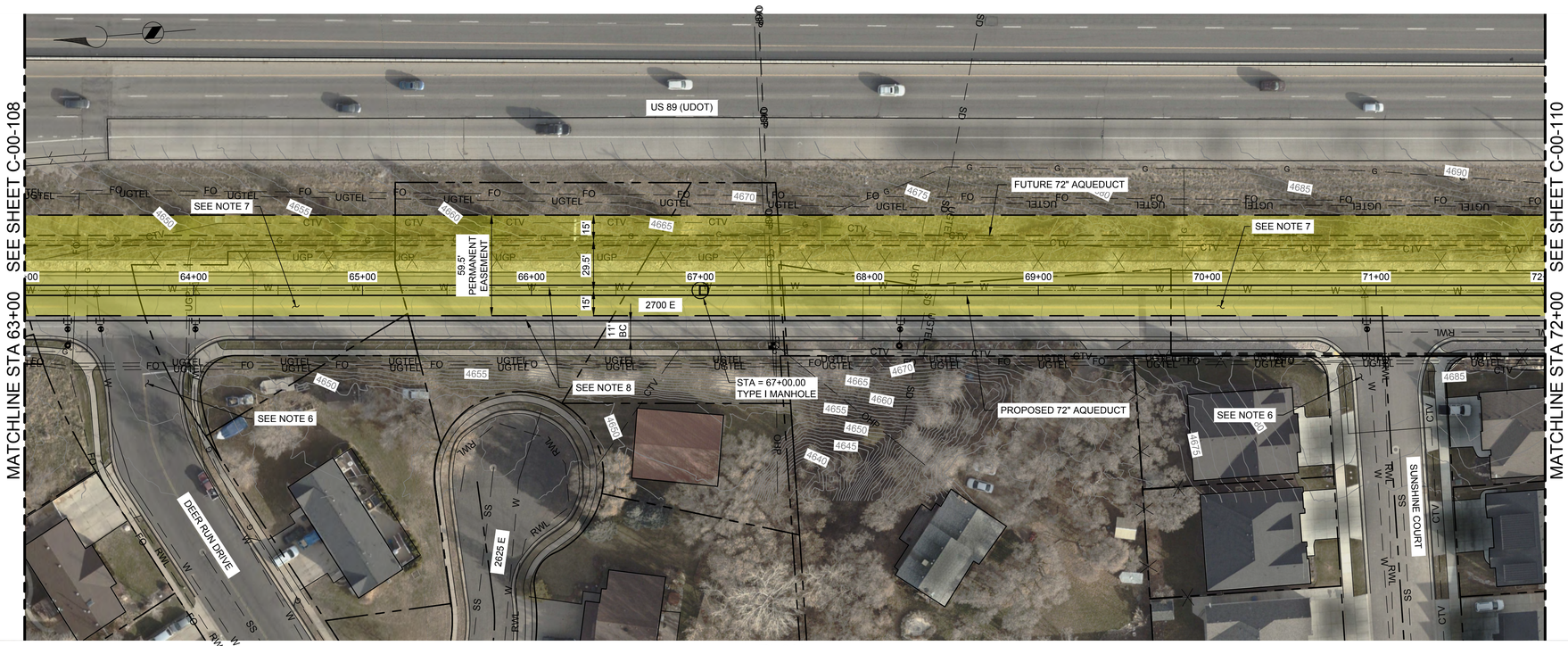

PLAN

SCALE: 1" = 40'

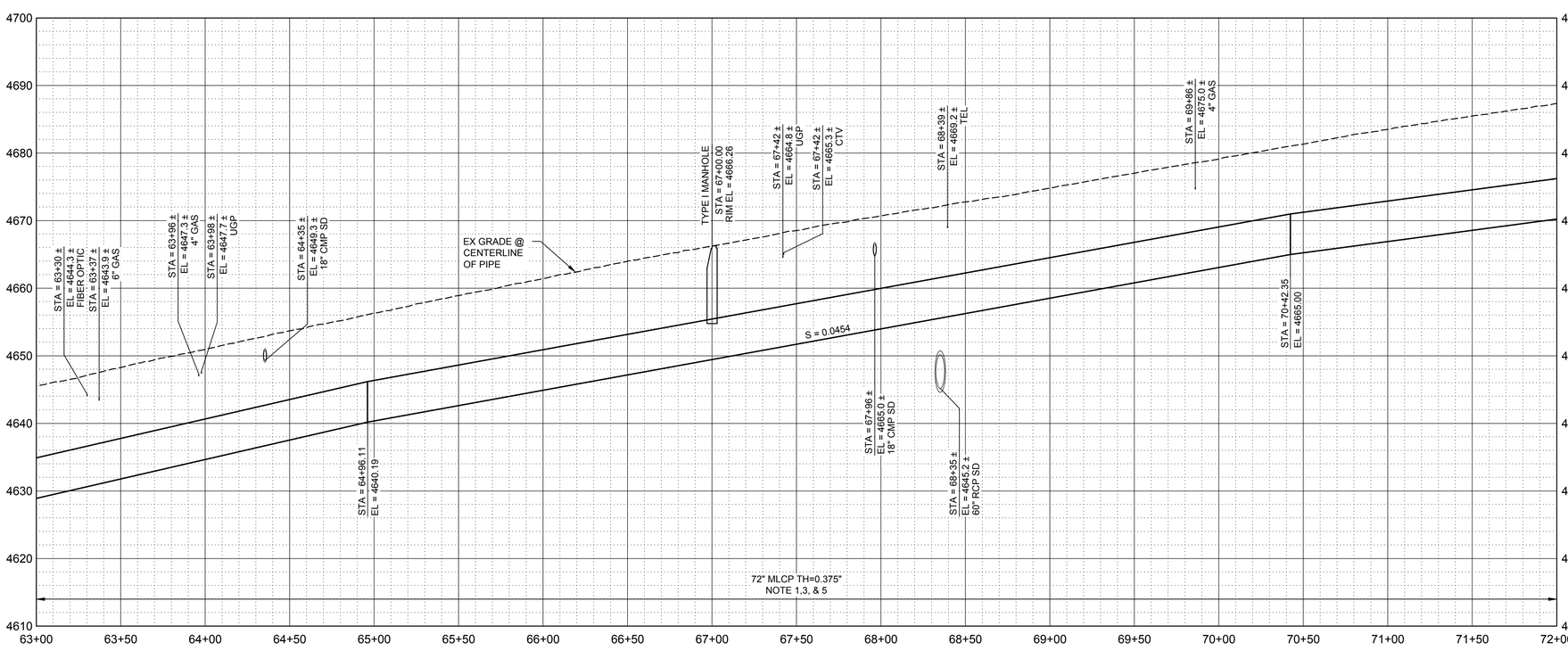

PROFILE

SCALE H: 1" = 40'

V: 1" = 10'

GENERAL NOTES:

1. WELDED STEEL PIPE SHALL HAVE DOUBLE WELDED LAP JOINTS AS SHOWN ON DETAIL X ON SHEET C-XXX.
2. WELDED STEEL PIPE SHALL HAVE FULL PENETRATION BUTT WELDS AS SHOWN ON DETAIL X ON SHEET-XXX
3. WELDED STEEL PIPE SHALL BE MORTAR LINED AND COATED IN ACCORDANCE WITH SPECIFICATION XXXX.
4. FOR PAVING DETAILS SEE DETAIL B ON SHEET C-XXX.
5. FOR TRENCH IN CITY STREET SEE DETAIL 3 ON SHEET C-00-500.
6. AT LEAST ONE LANE ACCESS TO THIS STREET MUST REMAIN OPEN AT ALL TIMES.
7. AT LEAST ONE LANE OF THE FRONTAGE ROAD SHALL REMAIN OPEN AT ALL TIMES.
8. X" WATER LINE SHALL BE RELOCATED PRIOR TO INSTALLING THE 72" PIPELINE.
9. CONTRACTOR SHALL PERFORM A PRE-CONSTRUCTION SURVEY FROM STA 27+75 TO STA 88+00 IN ACCORDANCE WITH SPECIFICATION XXXXX.

KEY NOTES:

0 40 80 HORIZ SCALE IN FEET

0 10 20 VERT SCALE IN FEET

Know what's below. Call 811 before you dig.
BLUE STAKES OF UTAH
UTILITY NOTIFICATION CENTER, INC.
www.bluestakes.org
1-800-662-4111

Brown AND Caldwell
Brown & Caldwell
6975 Union Park Center
Salt Lake City, UT

30% DESIGN SUBMITTAL

WEBER BASIN WATER CONSERVANCY DISTRICT

DAVIS AQUEDUCT REACH 1

REVISIONS

REV	DATE	DESCRIPTION

LINE IS 2 INCHES AT FULL SIZE

DESIGNED:
DRAWN:
CHECKED:
CHECKED:
APPROVED:

FILENAME C-00-109.DWG
BC PROJECT NUMBER 152858
CLIENT PROJECT NUMBER XXXXXXX

CIVIL

AQUEDUCT PLAN & PROFILE STA 63+00 TO STA 72+00

DRAWING NUMBER C-00-109

SHEET NUMBER ---- OF XX

Path: P:\PROJECTS\WEBER BASIN\152858_DA REACH 1 DESIGN AND CM_CAD\03-AUTOCAD\04-DWG_SHEETS\C-CIVIL FILENAME: C-00-109.DWG PLOT DATE: 9/11/2019 3:12 PM CAD USER: DAVID DAVIDSE
bs_logo.gif
DAVIS.jpg
WBWCD Logo.jpg

PLAN

SCALE: 1" = 40'

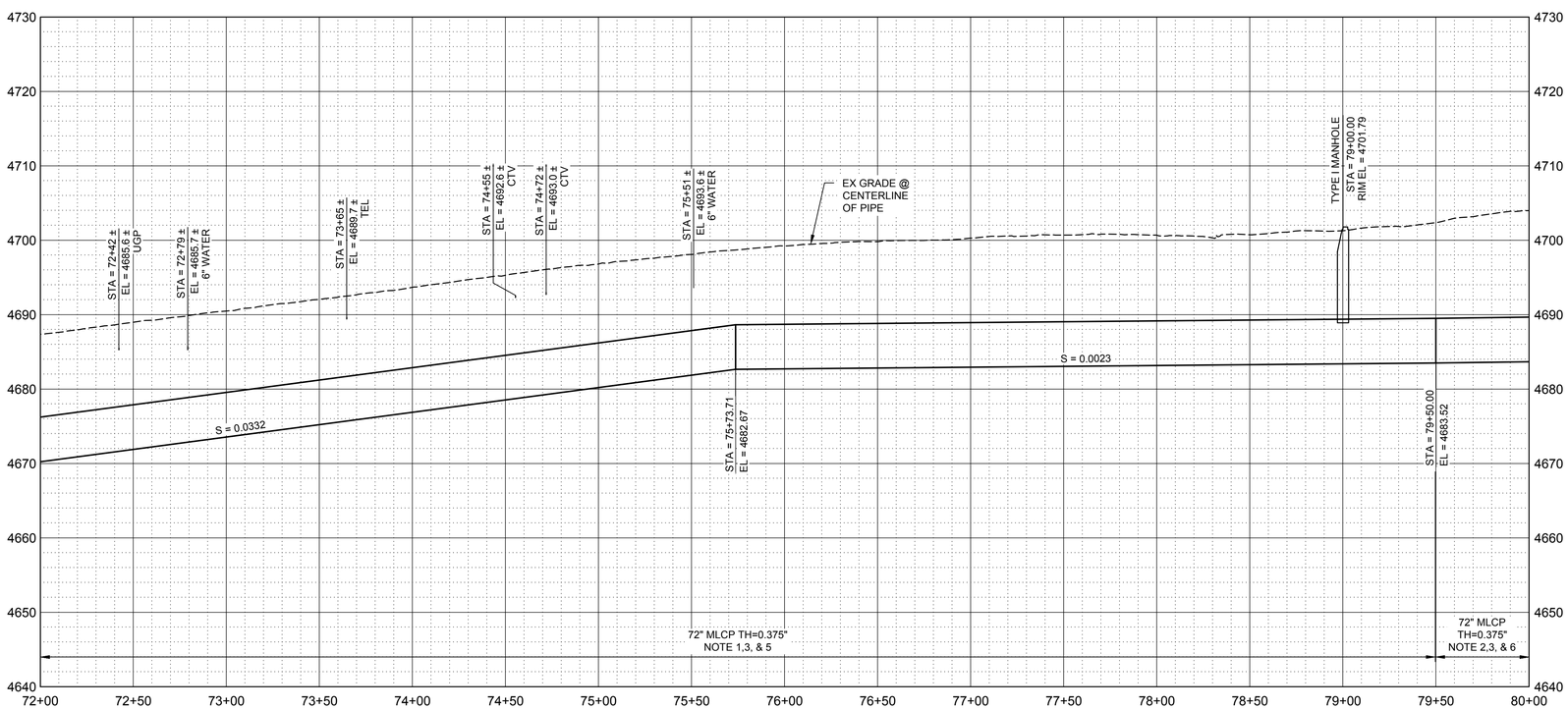

PROFILE

SCALE H: 1" = 40'

V: 1" = 10'

GENERAL NOTES:

1. WELDED STEEL PIPE SHALL HAVE DOUBLE WELDED LAP JOINTS AS SHOWN ON DETAIL X ON SHEET C-XXX.
2. WELDED STEEL PIPE SHALL HAVE FULL PENETRATION BUTT WELDS AS SHOWN ON DETAIL X ON SHEET-XXX
3. WELDED STEEL PIPE SHALL BE MORTAR LINED AND COATED IN ACCORDANCE WITH SPECIFICATION XXXX.
4. FOR PAVING DETAILS SEE DETAIL B ON SHEET C-XXX.
5. FOR TRENCH IN CITY STREET SEE DETAIL 3 ON SHEET C-00-500.
6. FOR TRENCH DETAILS SEE DETAIL 1 ON SHEET C-00-500.
7. AT LEAST ONE LANE ACCESS TO THIS STREET MUST REMAIN OPEN AT ALL TIMES.
8. AT LEAST ONE LANE OF THE FRONTAGE ROAD SHALL REMAIN OPEN AT ALL TIMES.
9. X" WATER LINE SHALL BE RELOCATED PRIOR TO INSTALLING THE 72" PIPELINE.
10. DRIVEWAY MAYBE CLOSED IF OTHER DRIVEWAY REMAINS OPEN AT ALL TIMES.
11. CONTRACTOR SHALL PERFORM A PRE-CONSTRUCTION SURVEY FROM STA 27+75 TO STA 88+00 IN ACCORDANCE WITH SPECIFICATION XXXXX.

KEY NOTES:

0 40 80 HORIZ SCALE IN FEET

0 10 20 VERT SCALE IN FEET

Know what's below. Call 811 before you dig.
BLUE STAKES OF UTAH
UTILITY NOTIFICATION CENTER, INC.
www.bluestakes.org
1-800-662-4111

Brown AND Caldwell
Brown & Caldwell
6975 Union Park Center
Salt Lake City, UT

30% DESIGN SUBMITTAL

WEBER BASIN WATER CONSERVANCY DISTRICT

DAVIS AQUEDUCT REACH 1

REVISIONS

REV	DATE	DESCRIPTION

LINE IS 2 INCHES AT FULL SIZE

DESIGNED:
DRAWN:
CHECKED:
CHECKED:
APPROVED:

FILENAME
C-00-110.DWG

BC PROJECT NUMBER
152858

CLIENT PROJECT NUMBER
XXXXXXX

CIVIL

AQUEDUCT PLAN & PROFILE STA 72+00 TO STA 80+00

DRAWING NUMBER
C-00-110

SHEET NUMBER ---- OF XX

Path: P:\PROJECTS\WEBER BASIN\152858_DA REACH 1 DESIGN AND CM_CAD\03-AUTOCAD\04-DWG\00-SHEETS\C-CIVIL FILENAME: C-00-110.DWG PLOT DATE: 9/11/2019 3:24 PM CAD USER: DAVID DAVIDSE
bs_logo.gif
Date: 3/1/2017
Rev: 1.00

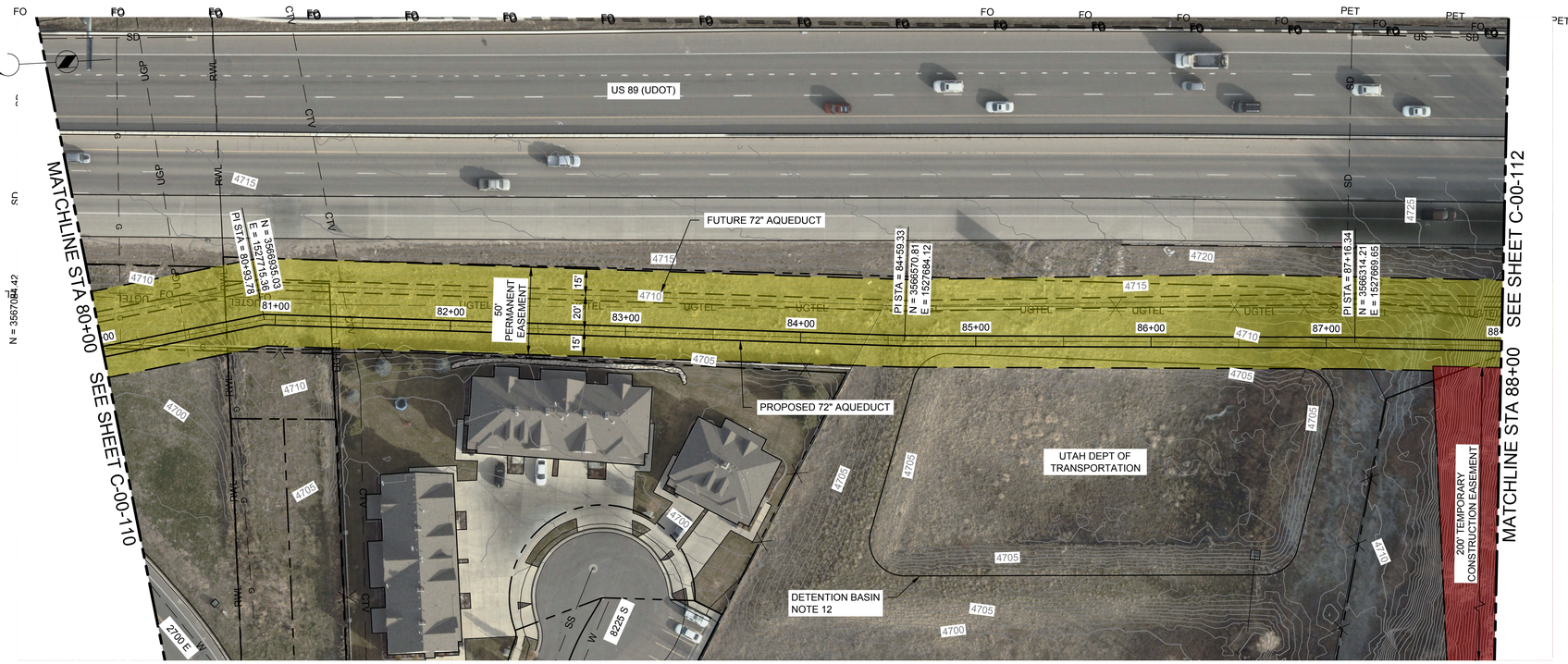

PLAN

SCALE: 1" = 40'

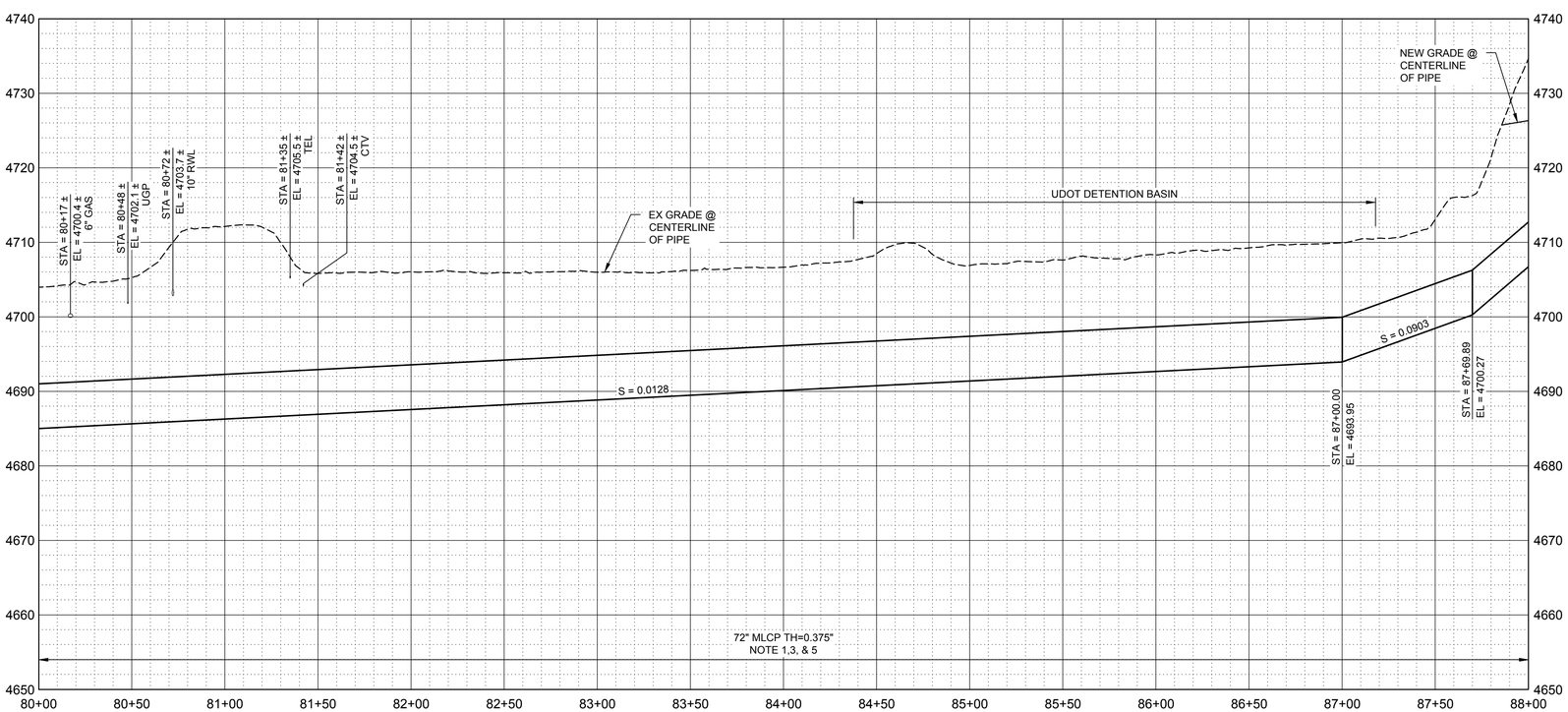

PROFILE

SCALE H: 1" = 40'

V: 1" = 10'

GENERAL NOTES:

1. WELDED STEEL PIPE SHALL HAVE DOUBLE WELDED LAP JOINTS AS SHOWN ON DETAIL X ON SHEET C-XXX.
2. WELDED STEEL PIPE SHALL HAVE FULL PENETRATION BUTT WELDS AS SHOWN ON DETAIL X ON SHEET-XXX
3. WELDED STEEL PIPE SHALL BE MORTAR LINED AND COATED IN ACCORDANCE WITH SPECIFICATION XXXX.
4. FOR PAVING DETAILS SEE DETAIL B ON SHEET C-XXX.
5. FOR TRENCH SEE DETAIL 1 ON SHEET C-00-500.
6. ALL LOCATIONS OF UTILITIES SHOWN ARE APPROXIMATE, CONTRACTOR SHALL FIELD VERIFY AND POTHOLE AS REQUIRED TO COMPLETE THE WORK.
7. CONTRACTOR SHALL FIELD VERIFY PHYSICAL LOCATION, ELEVATIONS, AND INVERTS. INFORMATION SHOWN IS APPROXIMATE. ELEVATIONS ARE BASED ON NAVD 88.
8. ALL PIPE LENGTHS ARE CENTER OF MANHOLE TO CENTER OF MANHOLE.
9. SEWER SERVICE LATERALS ARE NOT ALL SHOWN ON THE PLANS. THE CONTRACTOR IS RESPONSIBLE FOR VERIFICATION OF EXISTING LATERALS PRIOR TO REHABILITATING, ABANDONING, REPLACING, OR REMOVING PIPE SEGMENTS OR MANHOLES.
10. SEWER SERVICE LATERAL CONNECTING TO PIPES AND/OR MANHOLES BEING REHABILITATED AND/OR MODIFIED SHALL BE BYPASSED AND REINSTATED IN ACCORDANCE WITH THE CONTRACT DOCUMENTS.
11. THE CONTRACTOR SHALL FURNISH AND INSTALL ALL COUPLINGS, ADAPTERS, AND FITTINGS REQUIRED TO COMPLETE THE PIPE CONNECTION TO THE MANHOLES.
12. THE CONTRACTOR SHALL MAINTAIN STORM/IRRIGATION FLOWS.
13. CONTRACTOR SHALL PERFORM A PRE-CONSTRUCTION SURVEY FROM STA 27+75 TO STA 88+00 IN ACCORDANCE WITH SPECIFICATION XXXXX.

KEY NOTES:

0 40 80 HORIZ SCALE IN FEET

0 10 20 VERT SCALE IN FEET

Know what's below. Call 811 before you dig.

BLUE STAKES OF UTAH
UTILITY NOTIFICATION CENTER, INC.
www.bluestakes.org
1-800-662-4111

Brown AND Caldwell

Brown & Caldwell
6975 Union Park Center
Salt Lake City, UT

30% DESIGN SUBMITTAL

WEBER BASIN WATER CONSERVANCY DISTRICT

DAVIS AQUEDUCT REACH 1

REVISIONS

REV	DATE	DESCRIPTION

LINE IS 2 INCHES AT FULL SIZE

DESIGNED:
DRAWN:
CHECKED:
CHECKED:
APPROVED:

FILENAME
C-00-111.DWG

BC PROJECT NUMBER
152858

CLIENT PROJECT NUMBER
XXXXXXX

CIVIL

AQUEDUCT PLAN & PROFILE STA 80+00 TO STA 88+00

DRAWING NUMBER
C-00-111

SHEET NUMBER ---- OF XX

Path: P:\PROJECTS\WEBER BASIN\152858_DA REACH 1 DESIGN AND CM_CAD\03-AUTOCAD\04-CIVIL\SHEETS\C-CIVIL FILENAME: C-00-111.DWG PLOT DATE: 9/11/2019 7:06 PM CAD USER: DAVID DAVIDSE

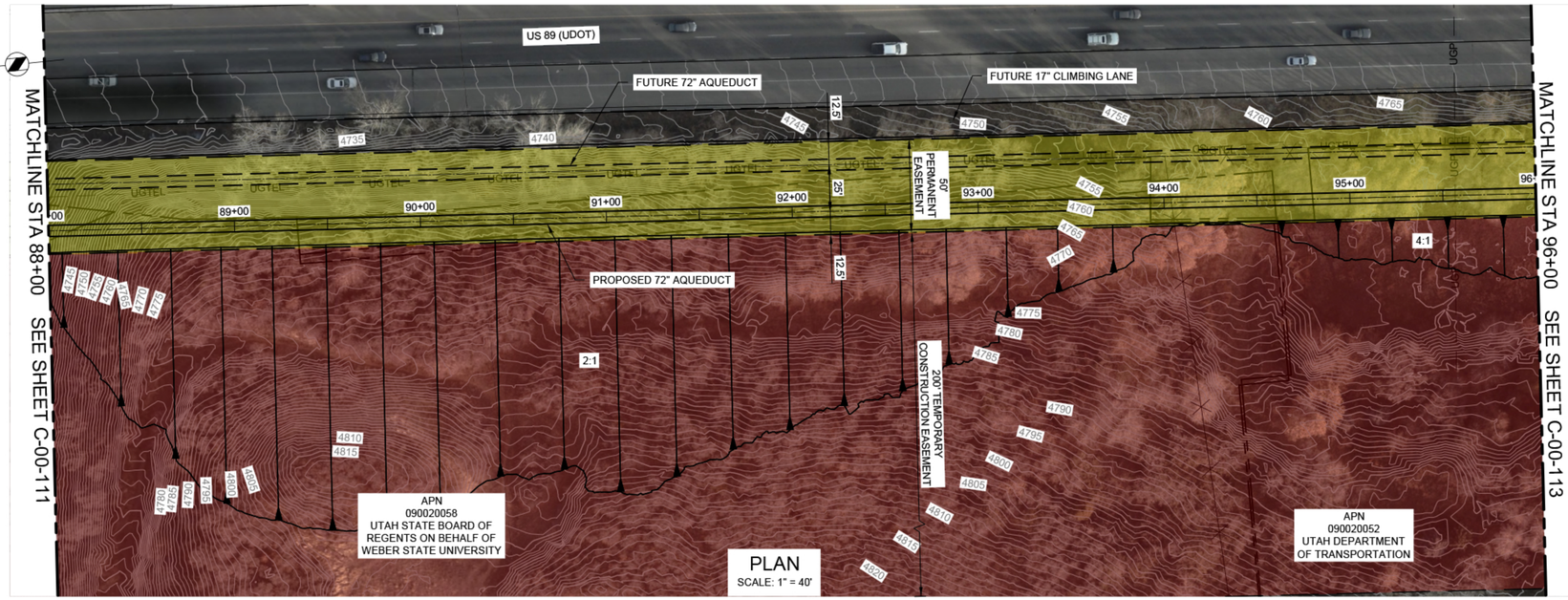

PLAN
SCALE: 1" = 40'

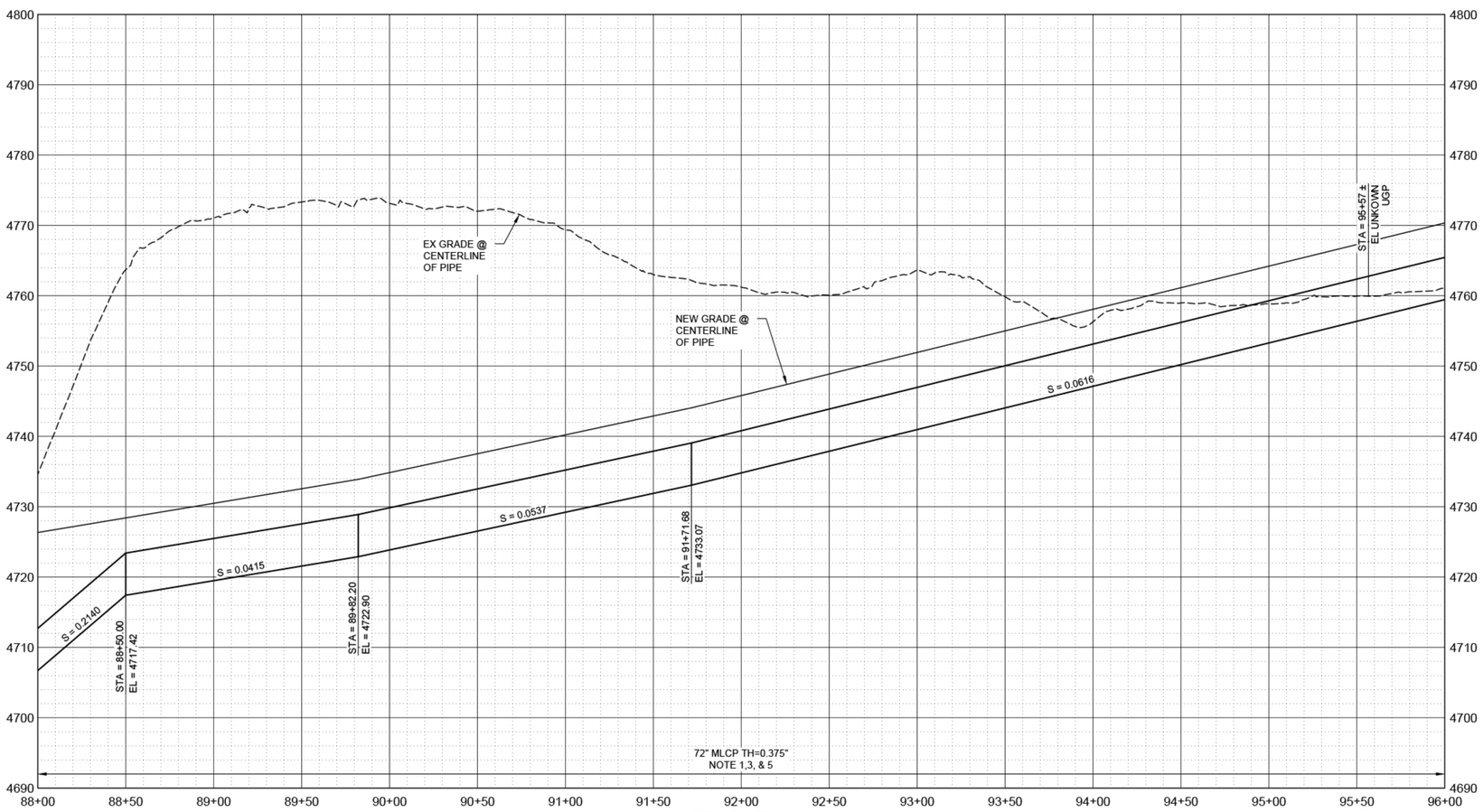

PROFILE
SCALE H: 1" = 40'
V: 1" = 10'

GENERAL NOTES:

1. WELDED STEEL PIPE SHALL HAVE DOUBLE WELDED LAP JOINTS AS SHOWN ON DETAIL X ON SHEET C-XXX.
2. WELDED STEEL PIPE SHALL HAVE FULL PENETRATION BUTT WELDS AS SHOWN ON DETAIL X ON SHEET-XXX
3. WELDED STEEL PIPE SHALL BE MORTAR LINED AND COATED IN ACCORDANCE WITH SPECIFICATION XXXX.
4. FOR TUNNEL SEE DETAIL V ON SHEEET C-XXX.
5. FOR TRENCH SEE DETAIL 1 ON SHEET C-00-500.

KEY NOTES:

0 40 80 HORIZ SCALE IN FEET

0 10 20 VERT SCALE IN FEET

Know what's below. Call 811 before you dig.
BLUE STAKES OF UTAH
UTILITY NOTIFICATION CENTER, INC.
www.bluestakes.org
1-800-662-4111

Brown AND Caldwell
Brown & Caldwell
6975 Union Park Center
Salt Lake City, UT

30% DESIGN SUBMITTAL

WEBER BASIN WATER CONSERVANCY DISTRICT

DAVIS AQUEDUCT REACH 1

REVISIONS

REV	DATE	DESCRIPTION

LINE IS 2 INCHES AT FULL SIZE

DESIGNED:
DRAWN:
CHECKED:
CHECKED:
APPROVED:

FILENAME
C-00-112.DWG

BC PROJECT NUMBER
152858

CLIENT PROJECT NUMBER
XXXXXXX

CIVIL

AQUEDUCT PLAN & PROFILE STA 88+00 TO STA 96+00

DRAWING NUMBER
C-00-112

SHEET NUMBER ---- OF XX

Path: P:\PROJECTS\WEBER BASIN\152858_DA REACH 1 DESIGN AND CM_CAD\03-AUTOCAD\04-DWG\01-SHEETS\C-CIVIL FILENAME: C-00-112.DWG PLOT DATE: 9/13/2019 7:50 AM CAD USER: DAVID DAVIDSE
bs_logo.gif
DAE_3.1.sld
WBWCD_Logo.jpg

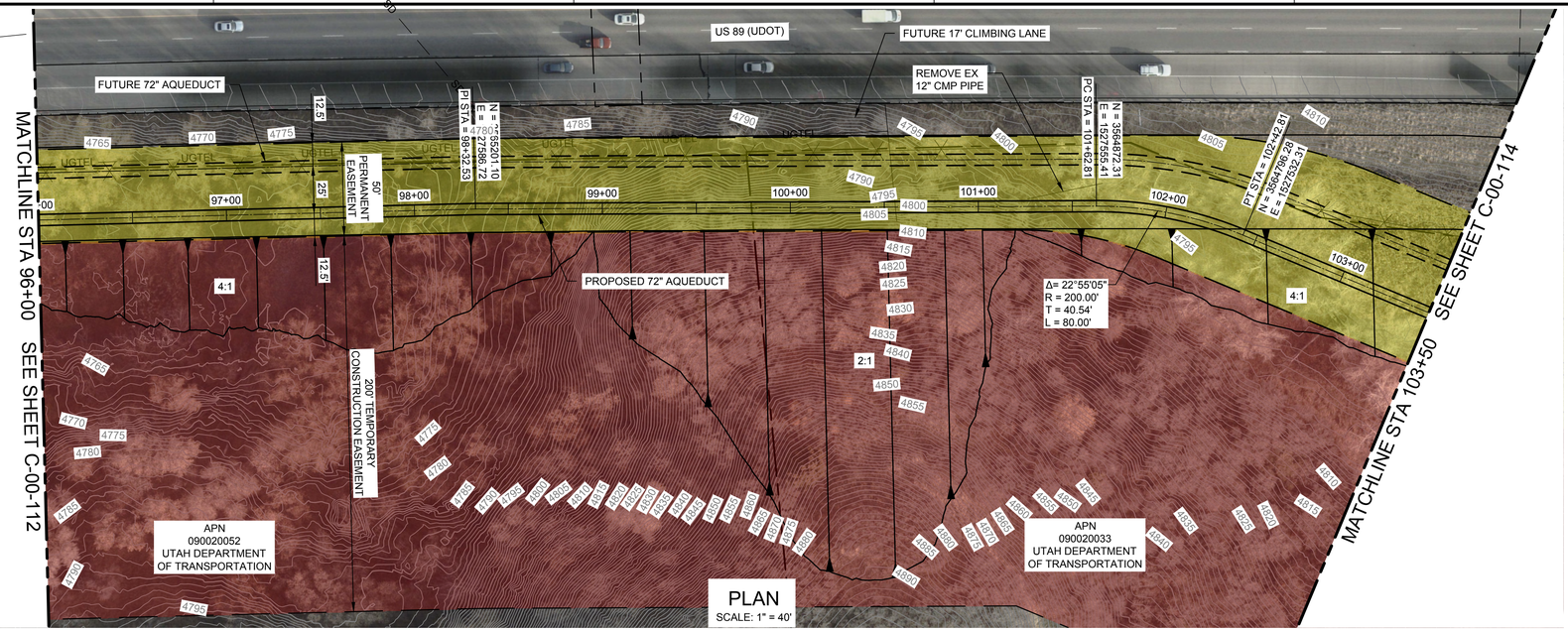

PLAN
SCALE: 1" = 40'

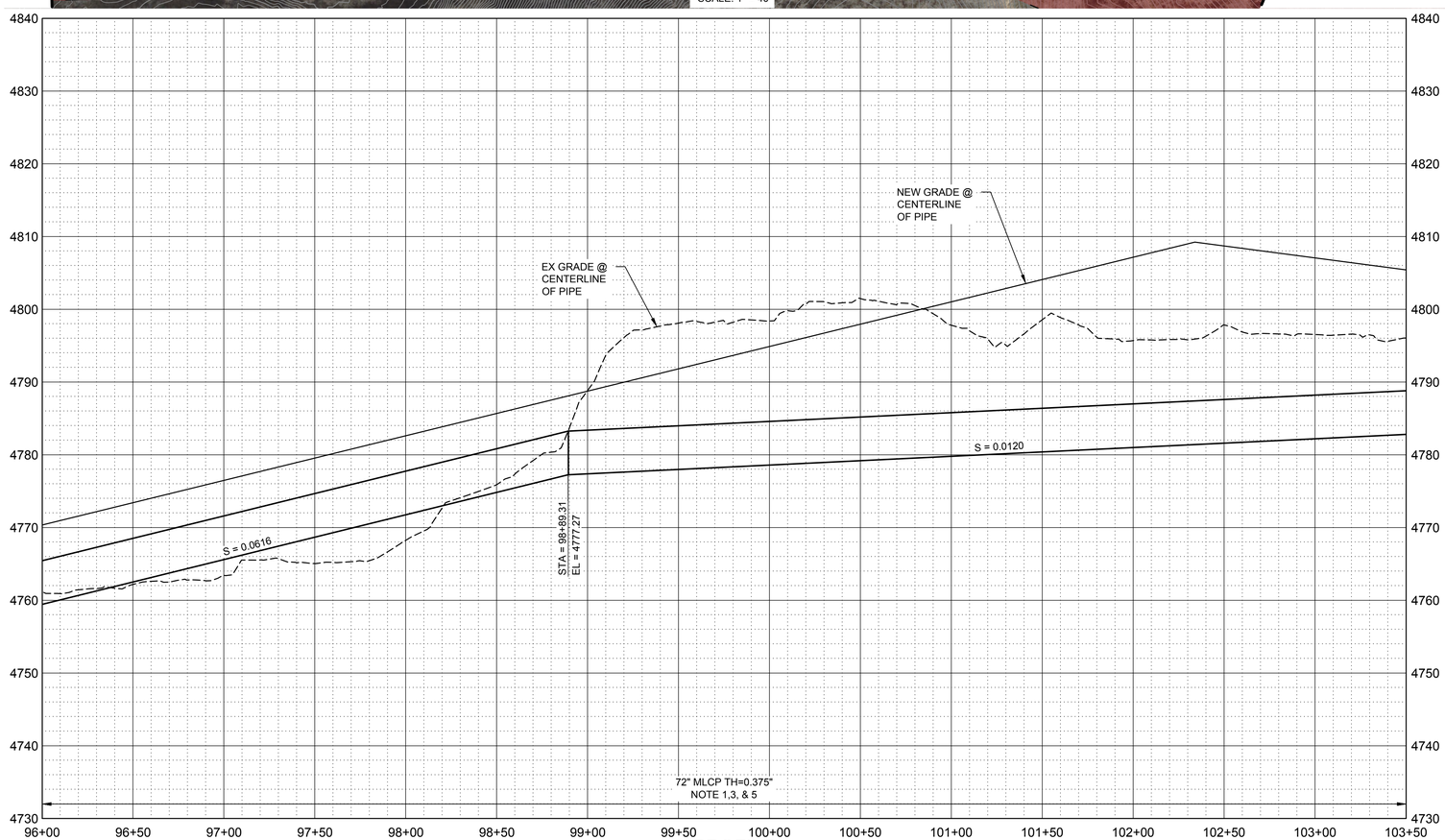

PROFILE
SCALE H: 1" = 40'
V: 1" = 10'

GENERAL NOTES:

1. WELDED STEEL PIPE SHALL HAVE DOUBLE WELDED LAP JOINTS AS SHOWN ON DETAIL X ON SHEET C-XXX.
2. WELDED STEEL PIPE SHALL HAVE FULL PENETRATION BUTT WELDS AS SHOWN ON DETAIL X ON SHEET-XXX
3. WELDED STEEL PIPE SHALL BE MORTAR LINED AND COATED IN ACCORDANCE WITH SPECIFICATION XXXX.
4. FOR TUNNEL SEE DETAIL V ON SHEEET C-XXX.
5. FOR TRENCH SEE DETAIL 1 ON SHEET C-00-500.

KEY NOTES:

0 40 80 HORIZ SCALE IN FEET

0 10 20 VERT SCALE IN FEET

Know what's below. Call 811 before you dig.
BLUE STAKES OF UTAH
UTILITY NOTIFICATION CENTER, INC.
www.bluestakes.org
1-800-662-4111

Brown AND Caldwell
Brown & Caldwell
6975 Union Park Center
Salt Lake City, UT

30% DESIGN SUBMITTAL

WEBER BASIN WATER CONSERVANCY DISTRICT

DAVIS AQUEDUCT REACH 1

REVISIONS

REV	DATE	DESCRIPTION

LINE IS 2 INCHES AT FULL SIZE

DESIGNED:
DRAWN:
CHECKED:
CHECKED:
APPROVED:

FILENAME
C-00-113.DWG
BC PROJECT NUMBER
152858
CLIENT PROJECT NUMBER
XXXXXXX

CIVIL

AQUEDUCT PLAN & PROFILE STA 96+00 TO STA 103+50

DRAWING NUMBER
C-00-113

SHEET NUMBER
---- OF XX

Path: P:\PROJECTS\WEBER BASIN\152858_DA REACH 1 DESIGN AND CM_CAD\03-AUTOCAD\04-CIVIL\DWG\SHEETS\C-CIVIL FILENAME: C-00-113.DWG PLOT DATE: 9/13/2019 7:51 AM CAD USER: DAVID DAVIDSE

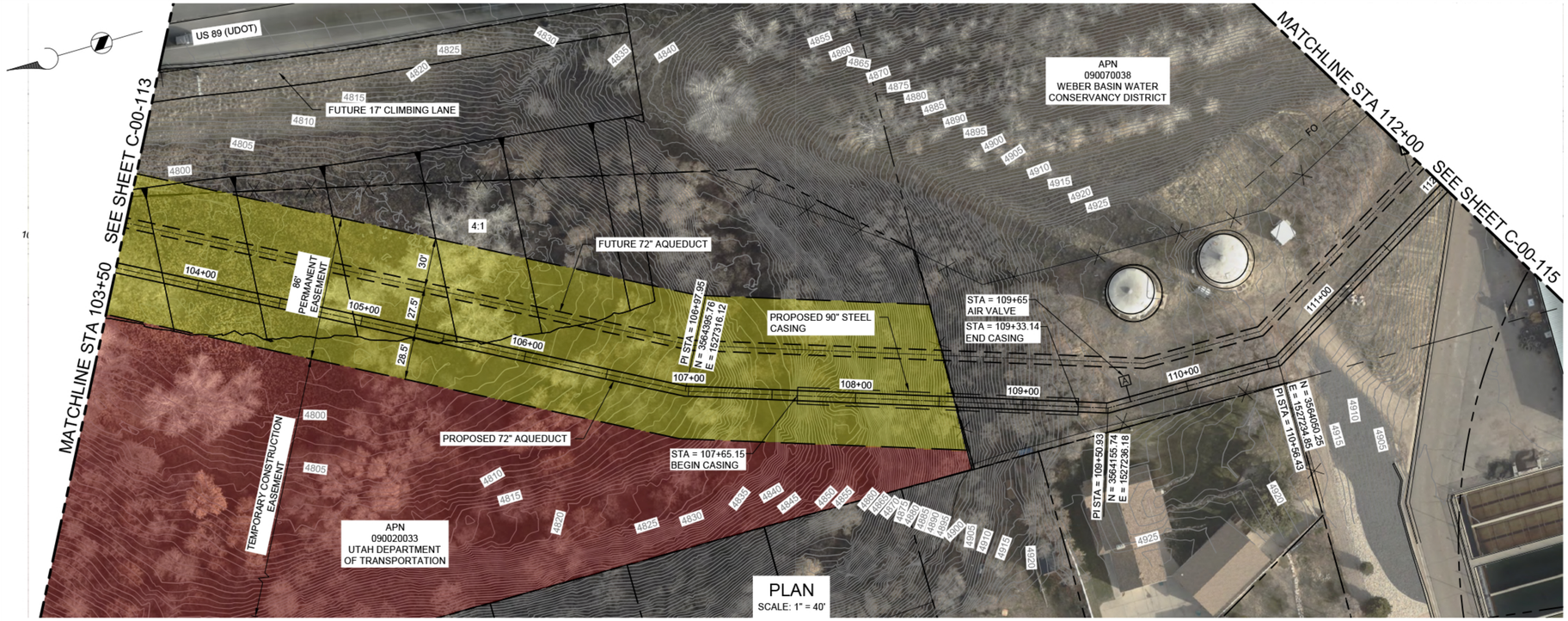

PLAN
SCALE: 1" = 40'

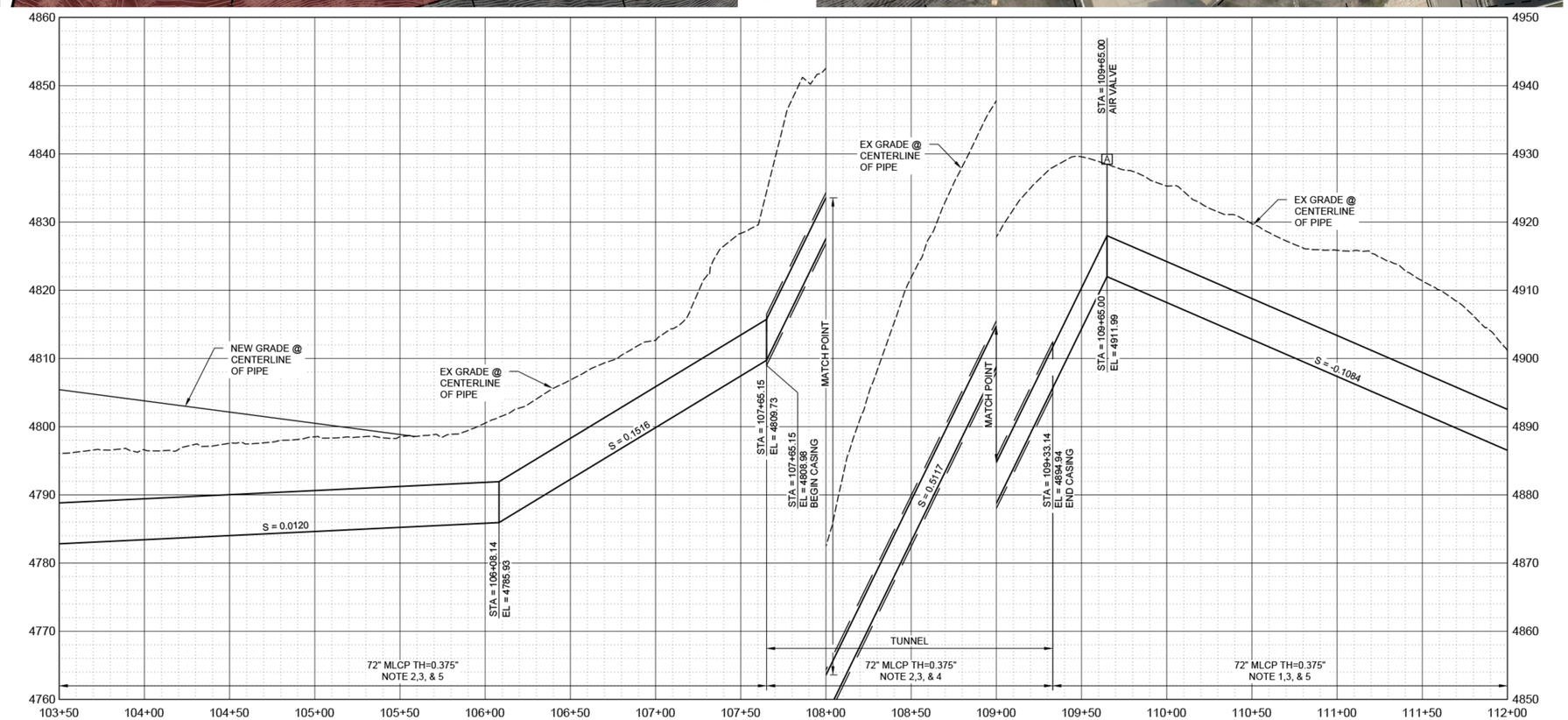

PROFILE
SCALE H: 1" = 40'
V: 1" = 10'

GENERAL NOTES:

1. WELDED STEEL PIPE SHALL HAVE DOUBLE WELDED LAP JOINTS AS SHOWN ON DETAIL X ON SHEET C-XXX.
2. WELDED STEEL PIPE SHALL HAVE FULL PENETRATION BUTT WELDS AS SHOWN ON DETAIL X ON SHEET-XXX
3. WELDED STEEL PIPE SHALL BE MORTAR LINED AND COATED IN ACCORDANCE WITH SPECIFICATION XXXX.
4. FOR TUNNEL SEE DETAIL V ON SHEEET C-XXX.
5. FOR TRENCH SEE DETAIL 1 ON SHEET C-00-500.

KEY NOTES:

0 40 80 HORIZ SCALE IN FEET

0 10 20 VERT SCALE IN FEET

Know what's below. Call 811 before you dig.
BLUE STAKES OF UTAH
UTILITY NOTIFICATION CENTER, INC.
www.bluestakes.org
1-800-662-4111

Brown AND Caldwell
Brown & Caldwell
6975 Union Park Center
Salt Lake City, UT

30% DESIGN SUBMITTAL

WEBER BASIN WATER CONSERVANCY DISTRICT

DAVIS AQUEDUCT
REACH 1

REVISIONS

REV	DATE	DESCRIPTION
-	-	---
-	-	---
-	-	---
-	-	---
-	-	---
-	-	---
-	---	--
-	-	---
-	-	---

LINE IS 2 INCHES AT FULL SIZE

DESIGNED: --
DRAWN: --
CHECKED: --
CHECKED: --
APPROVED: --

FILENAME
C-00-114.DWG
BC PROJECT NUMBER
152858
CLIENT PROJECT NUMBER
XXXXXXX

CIVIL

AQUEDUCT PLAN & PROFILE STA 103+50 TO STA 112+00

DRAWING NUMBER
C-00-114

SHEET NUMBER ---- OF XX

Path: P:\PROJECTS\WEBER BASIN\152858_DA REACH 1 DESIGN AND CM_CAD\03-AUTOCAD\04-CIVIL\SHEETS\C-CIVIL FILENAME: C-00-114.DWG PLOT DATE: 9/13/2019 7:53 AM CAD USER: DAVID DAVIDSE

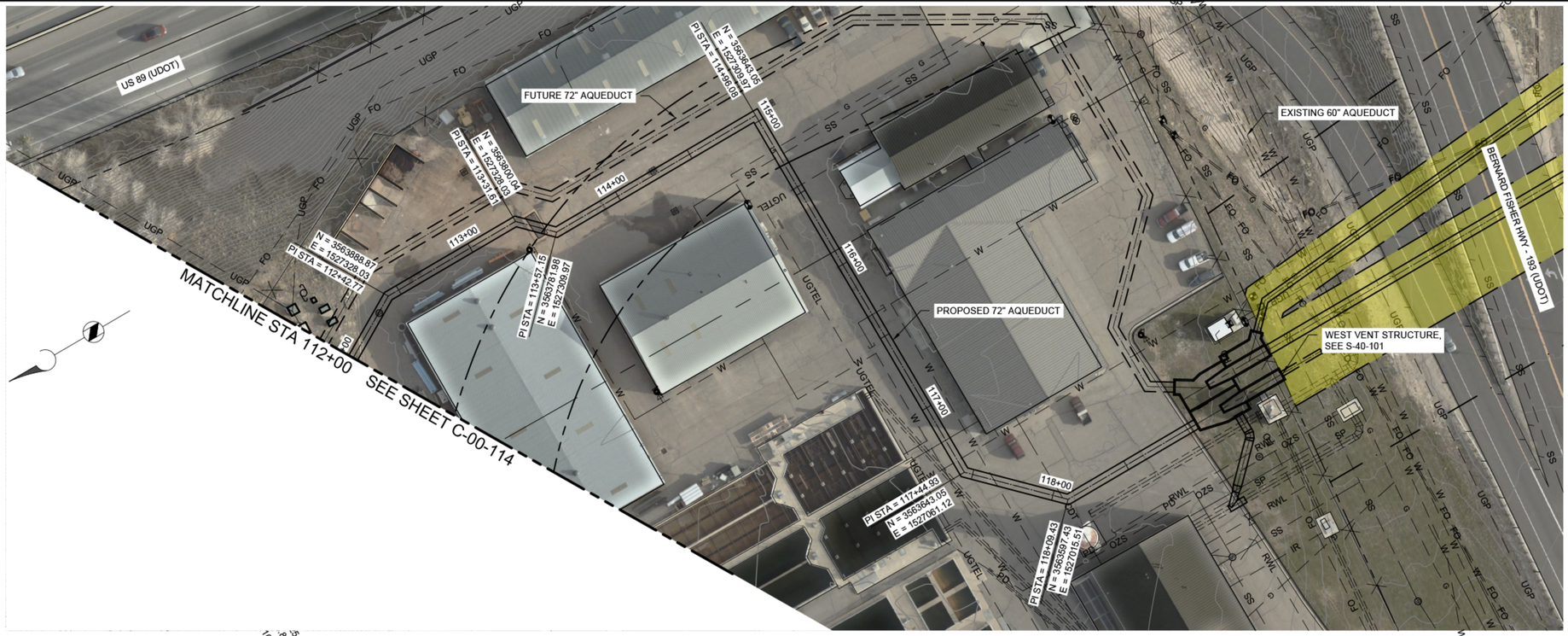

PLAN

SCALE: 1" = 40'

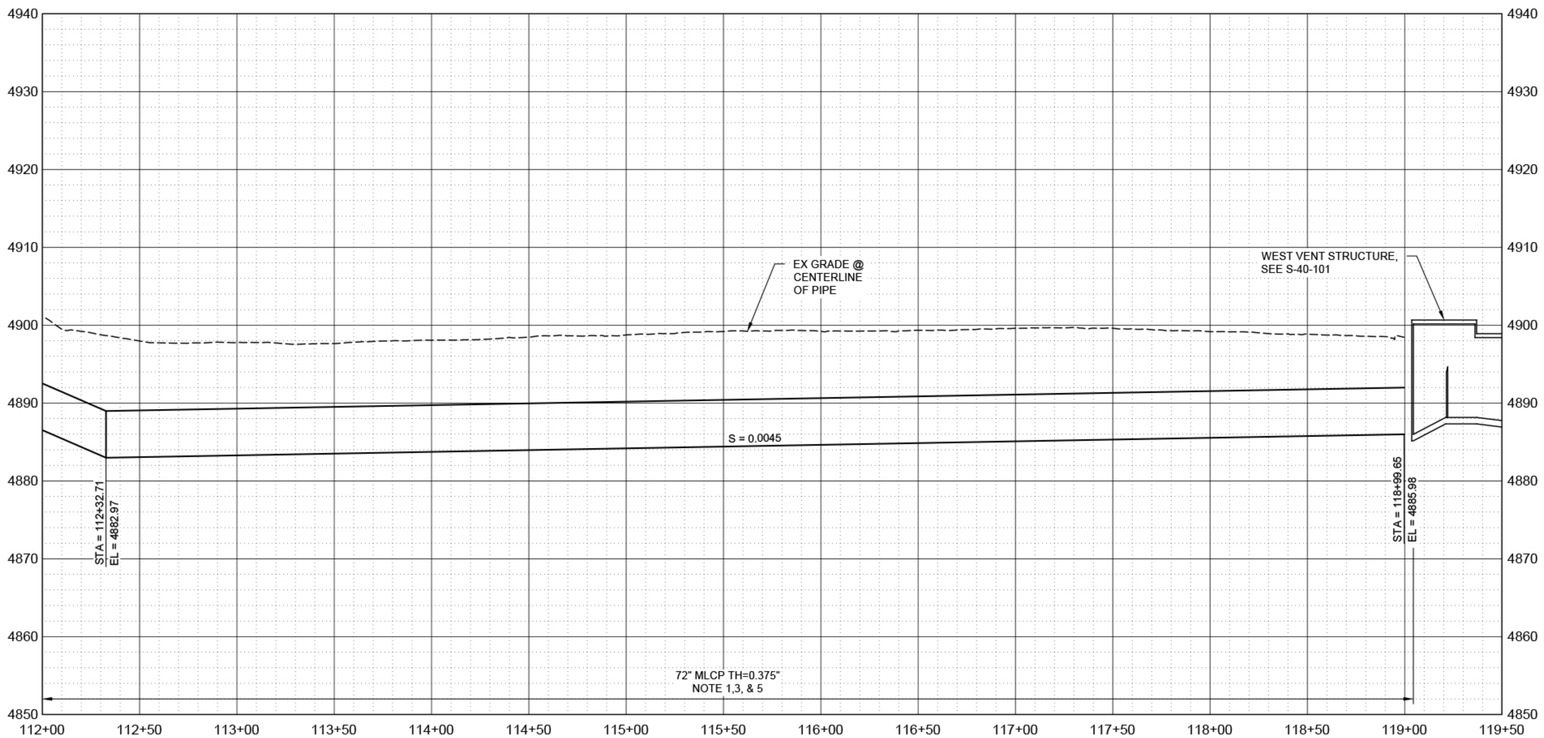

PROFILE

SCALE H: 1" = 40'

V: 1" = 10'

GENERAL NOTES:

1. WELDED STEEL PIPE SHALL HAVE DOUBLE WELDED LAP JOINTS AS SHOWN ON DETAIL X ON SHEET C-XXX.
2. WELDED STEEL PIPE SHALL HAVE FULL PENETRATION BUTT WELDS AS SHOWN ON DETAIL X ON SHEET-XXX
3. WELDED STEEL PIPE SHALL BE MORTAR LINED AND COATED IN ACCORDANCE WITH SPECIFICATION XXXX.
4. FOR TRENCH SEE DETAIL 1 ON SHEET C-00-500.

KEY NOTES:

0 40 80 HORIZ SCALE IN FEET

0 10 20 VERT SCALE IN FEET

Know what's below. Call 811 before you dig.
BLUE STAKES OF UTAH
UTILITY NOTIFICATION CENTER, INC.
www.bluestakes.org
1-800-662-4111

Brown AND Caldwell
Brown & Caldwell
6975 Union Park Center
Salt Lake City, UT

30% DESIGN SUBMITTAL

WEBER BASIN WATER CONSERVANCY DISTRICT

DAVIS AQUEDUCT REACH 1

REVISIONS

REV	DATE	DESCRIPTION
•	•	••••
•	•	••••
•	•	••••
•	•	••••
•	•	••••
•	•	••••
•	•••	••
•	•	••••
•	•	••••

LINE IS 2 INCHES AT FULL SIZE

DESIGNED: ••
DRAWN: ••
CHECKED: ••
CHECKED: ••
APPROVED: ••

FILENAME
C-00-115.DWG

BC PROJECT NUMBER
152858

CLIENT PROJECT NUMBER
XXXXXXX

CIVIL

AQUEDUCT PLAN & PROFILE STA 112+00 TO STA 118+99.65

DRAWING NUMBER
C-00-115

SHEET NUMBER ---- OF XX

Path: P:\PROJECTS\WEBER BASIN\152858_DA REACH 1 DESIGN AND CM_CAD\03-AUTOCAD\04-DWG\05-SHEETS\C-CIVIL FILENAME: C-00-115.DWG PLOT DATE: 9/11/2019 6:50 PM CAD USER: DAVID DAVIDSE
bs_logo.gif
DAR_21.sid
WBWCD_Logo.jpg
WBWCD_Logo.jpg

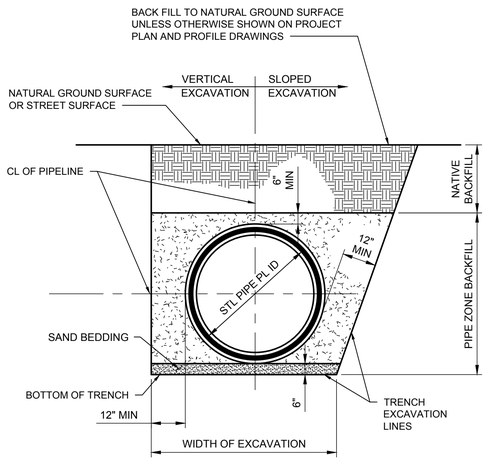

1 VAR TYPICAL EXCAVATION & BACKFILL
STA XX+XX TO STA XX+XX
SCALE: NTS

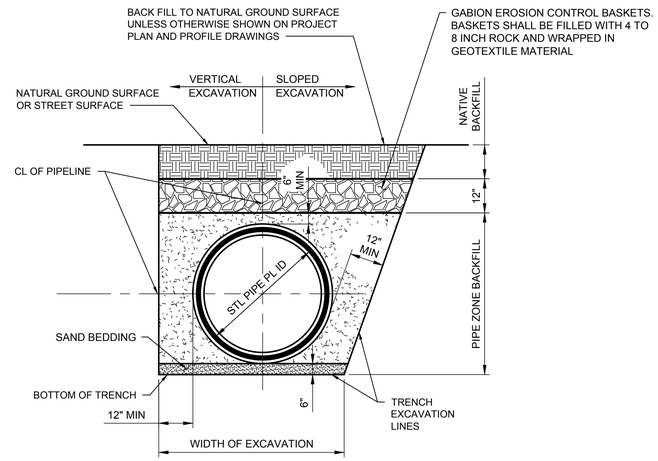

2 VAR TYPICAL EXCAVATION & BACKFILL
STA XX+XX TO STA XX+XX
SCALE: NTS

NOTE:

1. BACKFILL SHALL ACHEIVE 95% COMPACTION WHEN WITHIN 12" OF THE BOTTOM OF PAVED STREET AND 18" BELOW UDOT PAVING.

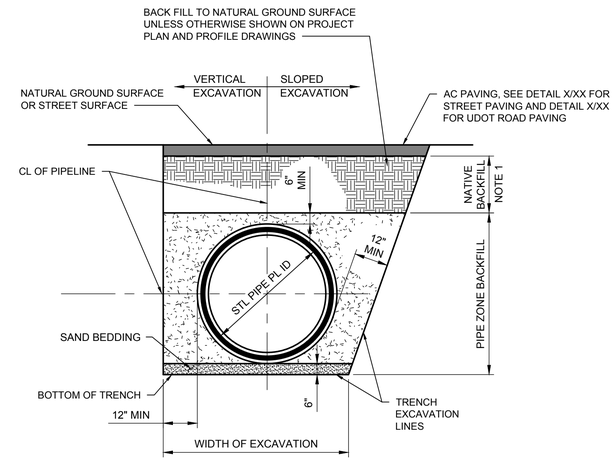

3 VAR TYPICAL EXCAVATION & BACKFILL
STA XX+XX TO STA XX+XX
SCALE: NTS

NOTE:

1. THE GEOTEXTILE SHALL BE MEET THE REQUIREMENTS OF AASHTO M-288-06 FOR CLASS 1 APPLICATIONS. THE GEOTEXTILE SHALL BE US FABRIC INC. - NON WOVEN GEOTEXTILE, US205NW OR APPROVED EQUAL.

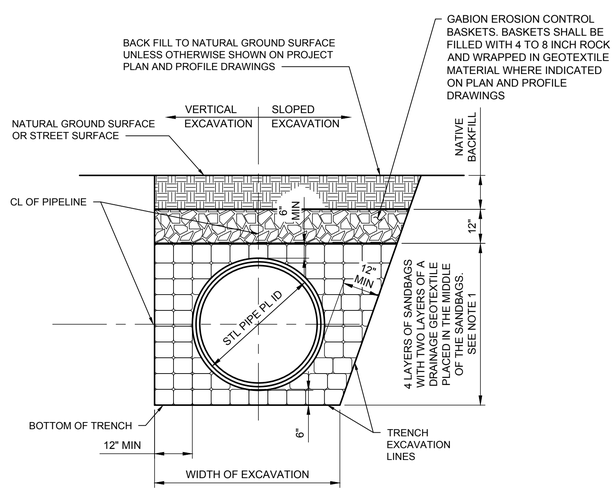

1 VAR TYPICAL TRENCH PLUG
STA XX+XX TO STA XX+XX
SCALE: NTS

Brown AND Caldwell

Brown & Caldwell
6975 Union Park Center
Salt Lake City, UT

30% DESIGN SUBMITTAL

WEBER BASIN WATER CONSERVANCY DISTRICT

DAVIS AQUEDUCT REACH 1

REVISIONS

REV	DATE	DESCRIPTION

LINE IS 2 INCHES AT FULL SIZE

DESIGNED:
DRAWN:
CHECKED:
CHECKED:
APPROVED:

FILENAME
C-00-500.DWG

BC PROJECT NUMBER
152858

CLIENT PROJECT NUMBER
XXXXXXX

CIVIL

TRENCH DETAILS

DRAWING NUMBER
C-00-500

SHEET NUMBER ---- OF XX

Path: P:\PROJECTS\WEBER BASIN\152858_DA REACH 1 DESIGN AND CMI_CAD\03-AUTOCAD\04-CIVIL\3D\02-SHEETS\C-CIVIL FILENAME: C-00-500.DWG PLOT DATE: 8/22/2019 10:35 AM CAD USER: DAVID DAVIDSE

WBWCD Logo.jpg

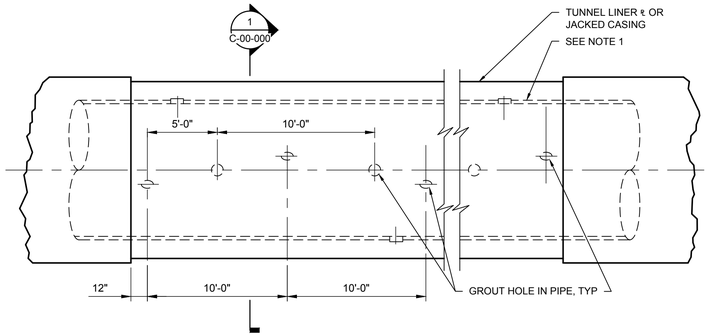

PLAN

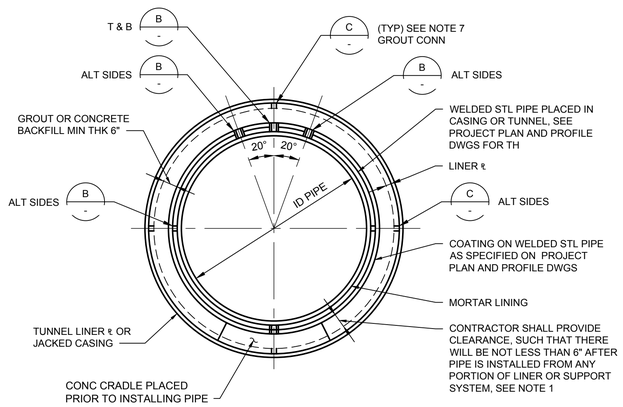

SECTION 1

A VAR WELDED STEEL PIPE SECTION
SCALE: NTS

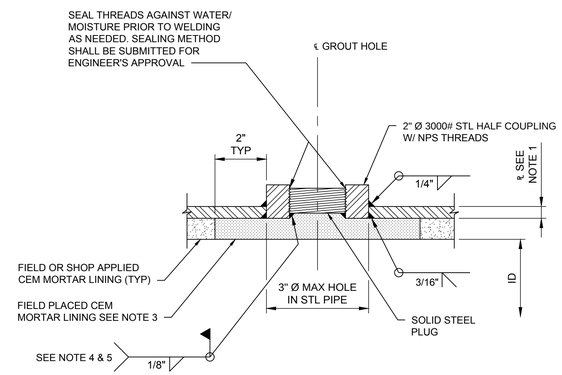

B WSP GROUT HOLE
SCALE: NTS

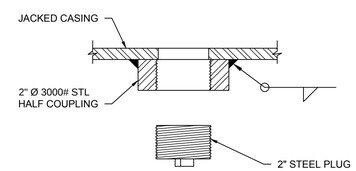

C JACKED CASING
CONTACT GROUT COUPLING CONNECTION
SCALE: NTS

NOTES:

1. "t " INDICATES THE THICKNESS OF THE STEEL PIPE, SEE PROJECT PLAN AND PROFILE DRAWINGS.
2. SOLID STEEL PUG SHALL BE MACHINED TO ALLOW SLIGHT RECESS IN THE COUPLING AFTER INSTALLATION.
3. AFTER GROUTING, CONTRACTOR SHALL CLEAN THREADS PRIOR TO INSTALLATION OF PLUG. PLUG HOLE WITH STEEL PLUG / SEAL WELD ALL AROUND PLUG, AND FINISH WITH CEMENT MORTAR. ALL PLUG FILLET WELDS SHALL BE PENETRANT TESTED.
4. STEEL PLUG WITH ALL AROUND SEAL WELD SHALL BE PENETRANT TESTED.
5. TAP THE THREADS 1/4" DEEPER THAN STANDARD THREADS SO PLUG WILL SIT 1/4" INTO COUPLING. PLUG SHALL SIT 1/4" BELOW TOP OF COUPLING TO ALLOW SEAL WELDING OF PLUG.
6. WELDED STEEL PIPE SHALL BE FIRMLY BLOCKED IN PLACE TO PREVENT FLOTATION.
7. SPACE GROUT CONNECTIONS AT 8' ON CENTER.

Brown AND Caldwell
Brown & Caldwell
6975 Union Park Center
Salt Lake City, UT

30% DESIGN SUBMITTAL

WEBER BASIN WATER CONSERVANCY DISTRICT

DAVIS AQUEDUCT REACH 1

REVISIONS

REV	DATE	DESCRIPTION

LINE IS 2 INCHES AT FULL SIZE

DESIGNED:
DRAWN:
CHECKED:
CHECKED:
APPROVED:

FILENAME
C-00-501.DWG
BC PROJECT NUMBER
152858
CLIENT PROJECT NUMBER
XXXXXXX

CIVIL

STEEL CASING DETAILS

DRAWING NUMBER
C-00-501

SHEET NUMBER ---- OF XX

Path: P:\PROJECTS\WEBER BASIN\152858_DA REACH 1 DESIGN AND CM_CAD\03-AUTOCAD\04-CIVIL3D\02-SHEETS\C-CIVIL FILENAME: C-00-501.DWG PLOT DATE: 8/21/2019 7:48 AM CAD USER: DAVID DAVIDSE
WBWCD Logo.jpg

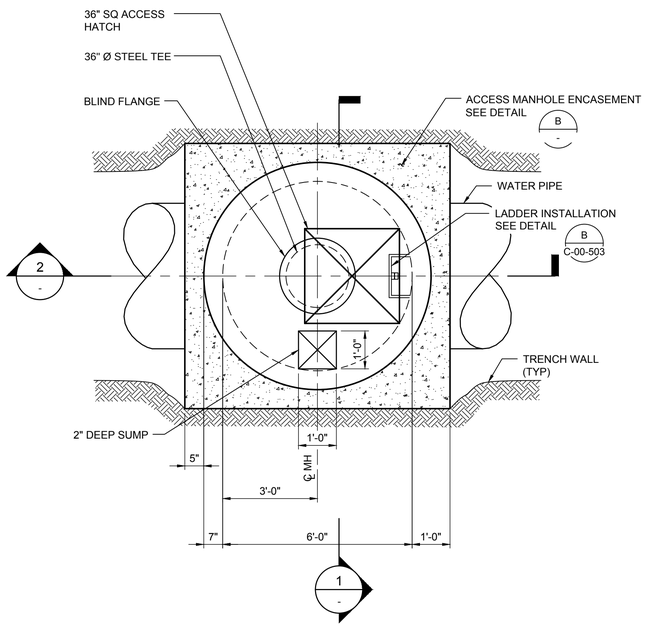

NOTE:
MH FRAME AND COVER AND MANWAY ARE BOTH SHOWN

A VAR ACCESS MANHOLE PLAN
SCALE: NTS

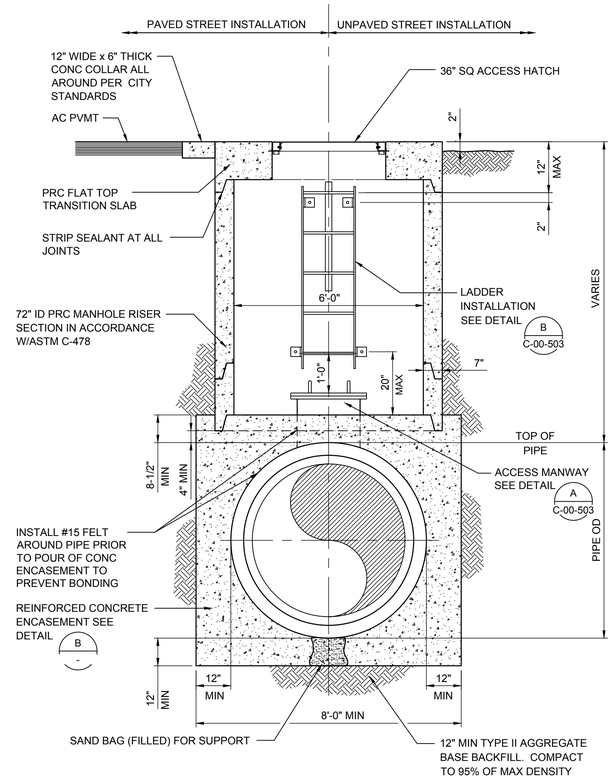

NOTE:

ACCESS HATCH SHALL BE RATED FOR H20 LOADING.

1 - SECTION
SCALE: NTS

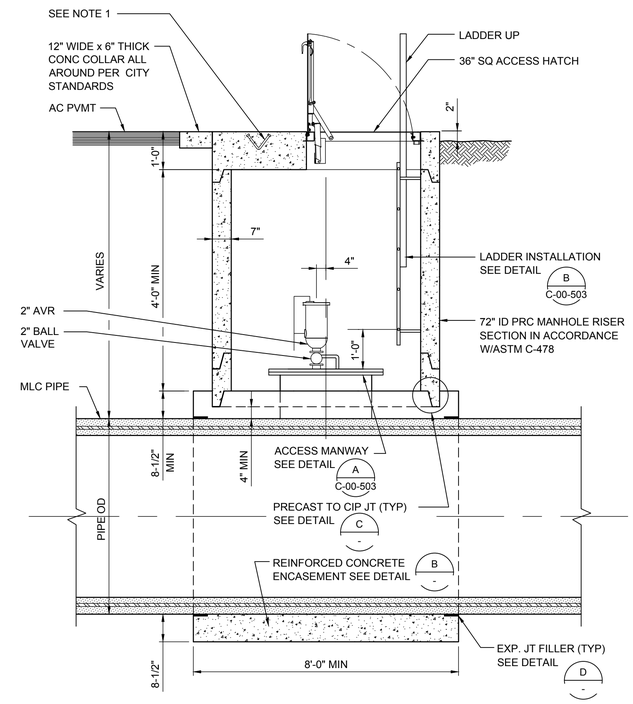

NOTE:

1. CAST A V-ANCHOR HOOK RECESS RATED AT 5-TON LIFTING CAPACITY IN THE MANHOLE LID TO FACILITATE BLIND FLANGE REMOVAL AND REPLACEMENT.

2 - SECTION
SCALE: NTS

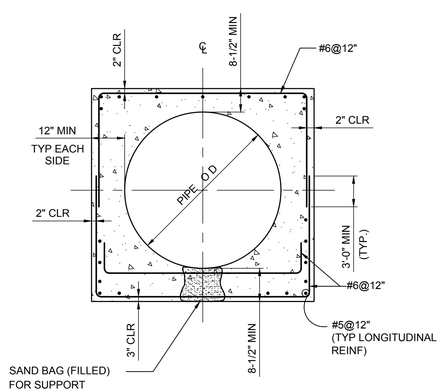

B - ACCESS MANHOLE ENCASEMENT
SCALE: NTS

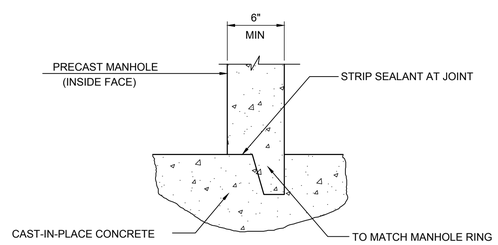

C - PRECAST TO CIP CONC BASE JT DETAIL
SCALE: NTS

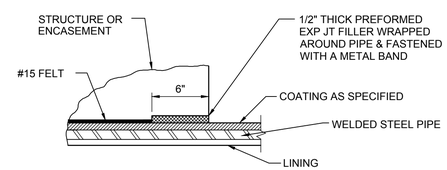

D - TYPICAL AT ENDS OF ALL STRUCTURES AND ENCASEMENTS
SCALE: NTS

Brown AND Caldwell

Brown & Caldwell
6975 Union Park Center
Salt Lake City, UT

30% DESIGN SUBMITTAL

WEBER BASIN WATER CONSERVANCY DISTRICT

DAVIS AQUEDUCT REACH 1

REVISIONS

REV	DATE	DESCRIPTION

LINE IS 2 INCHES AT FULL SIZE

DESIGNED:
DRAWN:
CHECKED:
CHECKED:
APPROVED:

FILENAME
C-00-502.DWG
BC PROJECT NUMBER
152858
CLIENT PROJECT NUMBER
XXXXXXX
CIVIL

ACCESS MANHOLE DETAILS - 1

DRAWING NUMBER
C-00-502

---- SHEET NUMBER OF XX

Path: P:\PROJECTS\WEBER BASIN\152858_DA REACH 1 DESIGN AND CM_CAD\03-AUTOCAD\04-CIVIL3D\02-SHEETS\C-CIVIL FILENAME: C-00-502.DWG PLOT DATE: 8/22/2019 10:33 AM CAD USER: DAVID DAVIDSE
WBWCD Logo.jpg

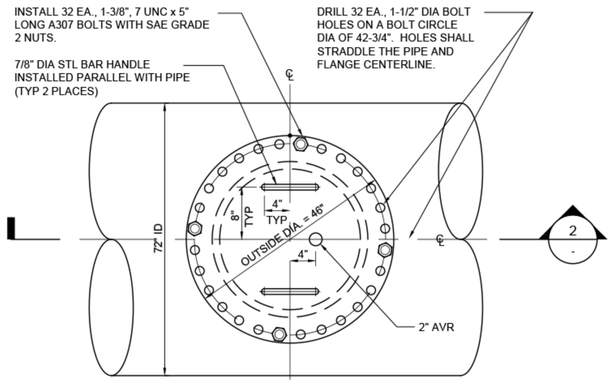

PLAN

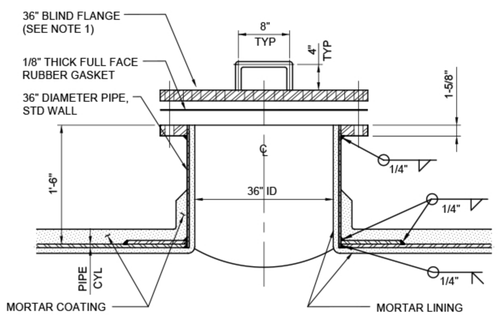

SECTION 1

NOTES

1. STANDARD BLIND FLANGE CLASS "D" (2.003" THICK) PER AWWA C207-94.
2. SEE SPECS SEC 02511 FOR MORTAR LINED AND COATED STEEL PIPE.
3. COAT BLIND FLANGE AS SHOWN IN SPECIFICATIONS.

A VAR 36-INCH PIPE ACCESS MANWAY
SCALE: NTS

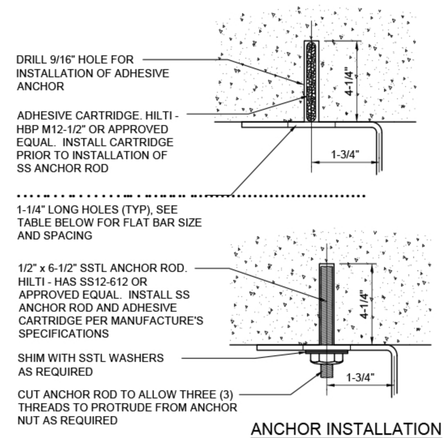

ANCHOR INSTALLATION

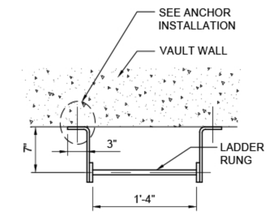

LADDER IN VAULT

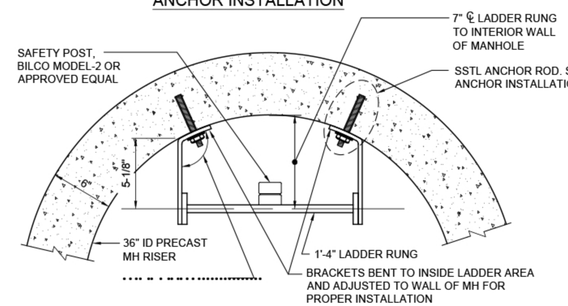

LADDER IN MANHOLE

BRACKET SPACING TABLE

BRACKET SPACING	FLAT BAR SIZE
5'-0" TO 20'-0" OC MAX	3" x 3/8"
OVER 20'-0"	4" x 1/2"

NOTES

1. LANDING PLATFORM REQUIRED EVERY 20'-0" OF HEIGHT OR FRACTION THEREOF FOR OPEN LADDER. FOR LADDER WITH CAGE, PLATFORM SPACING IS 30'-0" MAX (OSHA 1910.27).
2. APPROVAL OF THE ENGINEER REQUIRED FOR ANY BRACKET SPACING OVER 5'-0" OC (SEE BRACKET SPACING TABLE FOR BAR SIZE).
3. [illegible] WELDED TO RUNNERS.
4. GALVANIZE LADDER ASSEMBLY AFTER WELDING.

B VAR LADDER INSTALLATION DETAILS
SCALE: NTS

Brown AND Caldwell
Brown & Caldwell
6975 Union Park Center
Salt Lake City, UT

30% DESIGN SUBMITTAL

WEBER BASIN WATER CONSERVANCY DISTRICT

DAVIS AQUEDUCT REACH 1

REVISIONS

REV	DATE	DESCRIPTION
-	-	---
-	-	---
-	-	---
-	-	---
-	-	---
-	-	---
-	---	--
-	-	---
-	-	---

LINE IS 2 INCHES AT FULL SIZE

DESIGNED: --
DRAWN: --
CHECKED: --
CHECKED: --
APPROVED: --

FILENAME
C-00-503.DWG
BC PROJECT NUMBER
152858
CLIENT PROJECT NUMBER
XXXXXXX

CIVIL

ACCESS MANHOLE DETAILS - 2

DRAWING NUMBER
C-00-503
SHEET NUMBER ---- OF XX

Path: P:\PROJECTS\WEBER BASIN\152858_DA REACH 1 DESIGN AND CM_CAD\03-AUTOCAD\04-CIVIL\3D\02-SHEETS\C-CIVIL FILENAME: C-00-503.DWG PLOT DATE: 4/22/2019 11:36 AM CAD USER: DAVID DAVIDSE
WBWCD Logo.jpg

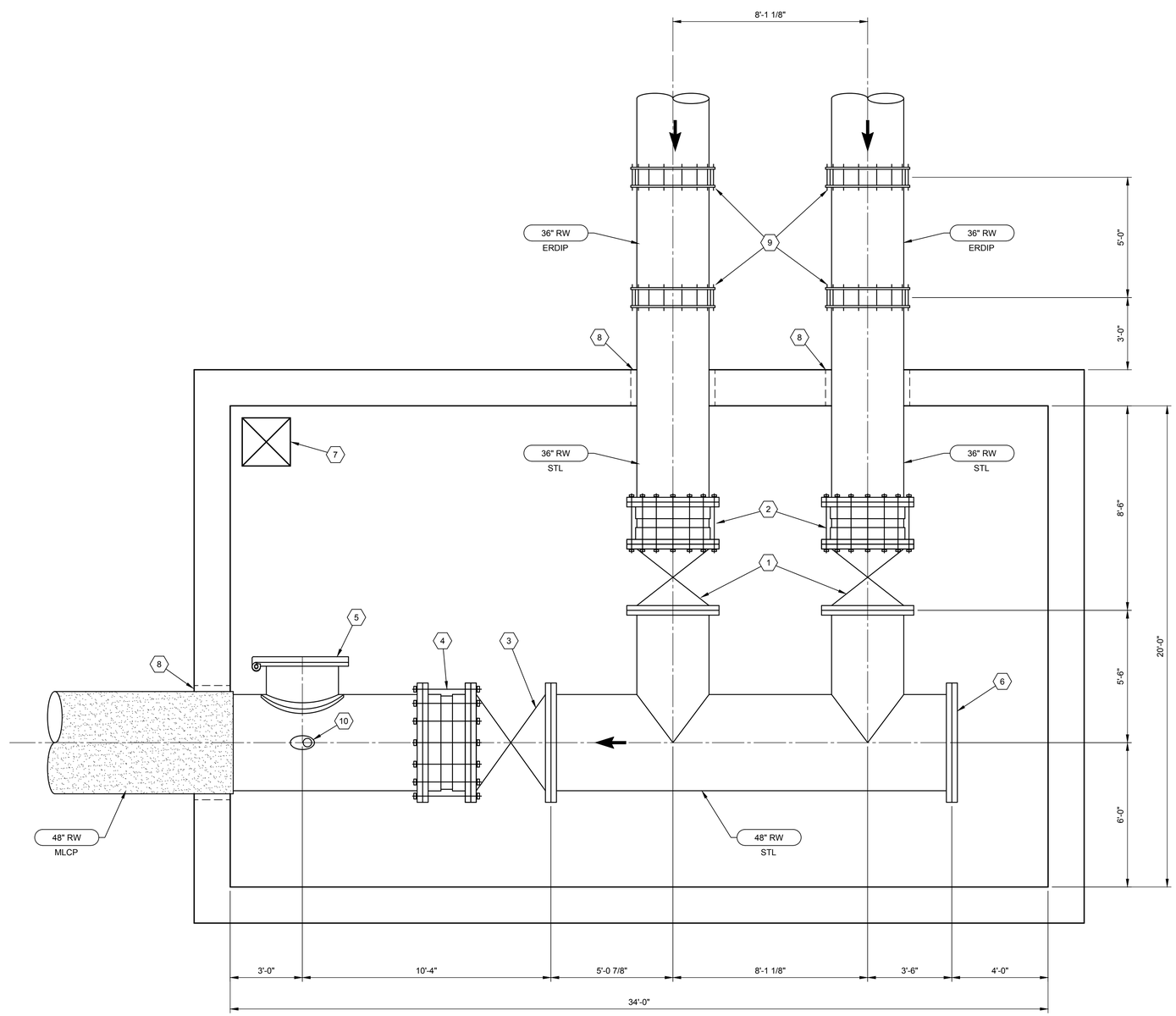

BIFURCATION VALVE VAULT - PLAN

SCALE: 3/8" = 1'-0"

GENERAL NOTES:

KEY NOTES:

1. 36" GATE VALVE FLxFL
2. 36" DISMANTLING JOINT COUPLING
3. 48" GATE VALVE FLxFL
4. 48" DISMANTLING JOINT COUPLING
5. 36" ACCESS MANWAY, SEE DETAIL X/XXX
6. 48" BLIND FLANGE
7. 24" SUMP, SEE DETAIL X/XXX
8. PIPE WALL PENETRATION, SEE DETAIL X/XXX
9. 36" FLEXIBLE COUPLING ADAPTER
10. X" AIR RELEASE AND VACUUM VALVE

Brown AND Caldwell

Brown & Caldwell
6975 Union Park Center
Salt Lake City, UT

30% DESIGN SUBMITTAL

WEBER BASIN WATER CONSERVANCY DISTRICT

DAVIS AQUEDUCT REACH 1

REVISIONS

REV	DATE	DESCRIPTION

LINE IS 2 INCHES AT FULL SIZE

DESIGNED:
DRAWN:
CHECKED:
CHECKED:
APPROVED: ----

FILENAME
M-20-101.DWG

BC PROJECT NUMBER
152858

CLIENT PROJECT NUMBER
XXXXXXX

MECHANICAL

BIFURCATION VALVE VAULT - PLAN

DRAWING NUMBER
M-20-101

SHEET NUMBER ---- OF XX

Path: P:\PROJECTS\WEBER BASIN\152858_DA REACH 1 DESIGN AND CM_CAD\03-AUTOCAD\04-CIVIL3D\02-SHEETS\M-MECHANICAL FILENAME: M-20-101.DWG PLOT DATE: 8/21/2019 8:26 AM CAD USER: DAVID DAVIDSE
WBWCD Logo.jpg

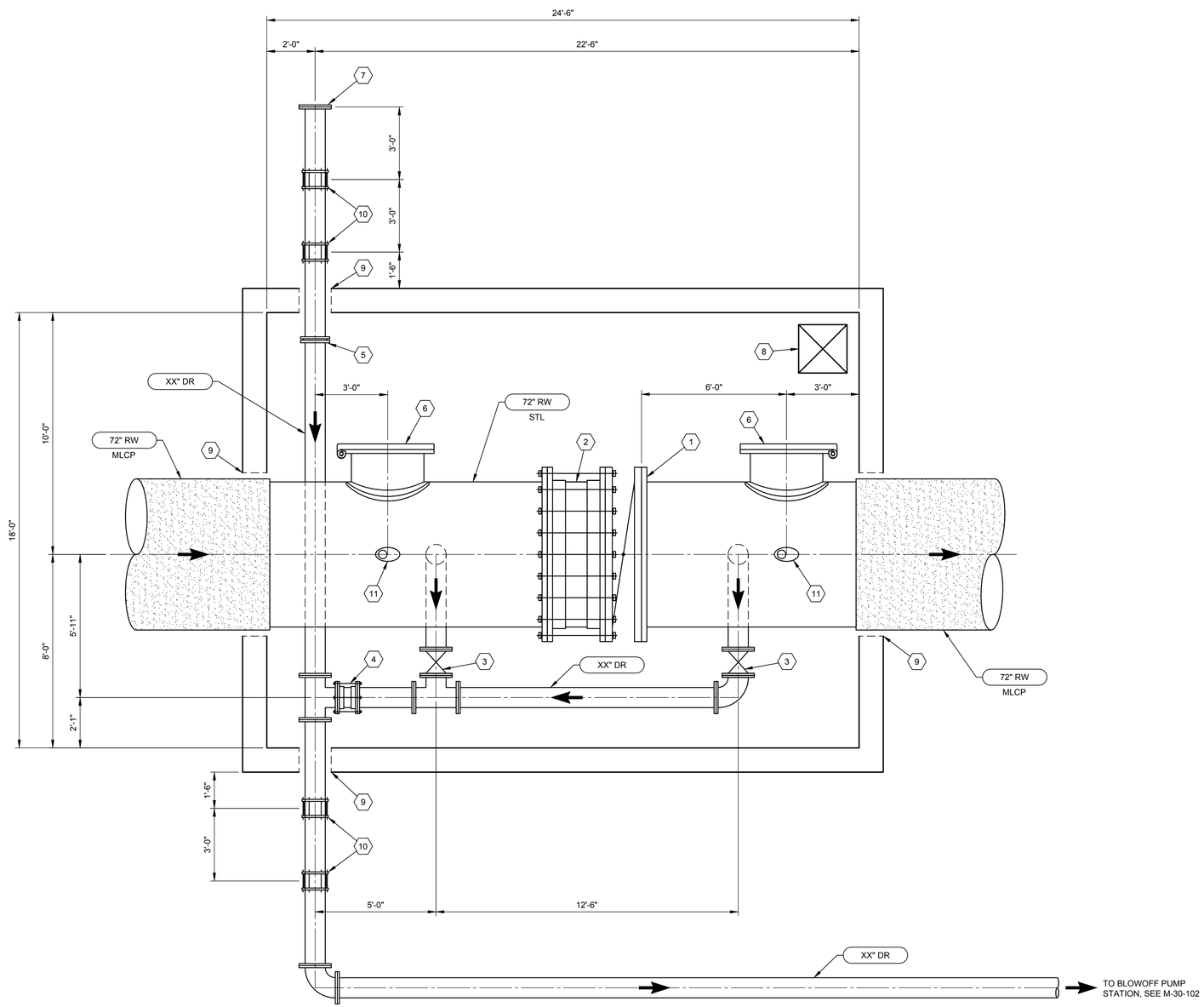

BLOWOFF VALVE VAULT - PLAN

SCALE: 3/8" = 1'-0"

GENERAL NOTES:

KEY NOTES:

1. 72" BUTTERFLY VALVE FLxFL
2. 72" DISMANTLING JOINT COUPLING
3. 10" GATE VALVE FLxFL
4. 10" DISMANTLING JOINT COUPLING
5. 10" MECHANICAL COUPLING
6. 36" ACCESS MANWAY, SEE DETAIL X/XXX
7. 10" BLIND FLANGE
8. 24" SUMP, SEE DETAIL X/XXX
9. PIPE WALL PENETRATION, SEE DETAIL X/XXX
10. 10" FLEXIBLE COUPLING ADAPTER
11. X" AIR RELEASE AND VACUUM VALVE

Brown AND Caldwell

Brown & Caldwell
6975 Union Park Center
Salt Lake City, UT

30% DESIGN SUBMITTAL

WEBER BASIN WATER CONSERVANCY DISTRICT

DAVIS AQUEDUCT REACH 1

REVISIONS

REV	DATE	DESCRIPTION

LINE IS 2 INCHES AT FULL SIZE

DESIGNED:
DRAWN:
CHECKED:
CHECKED:
APPROVED: ----

FILENAME
M-30-101.DWG

BC PROJECT NUMBER
152858

CLIENT PROJECT NUMBER
XXXXXXX

MECHANICAL

BLOWOFF VAULT

DRAWING NUMBER
M-30-101

SHEET NUMBER ---- OF XX

Path: P:\PROJECTS\WEBER BASIN\152858_DA REACH 1 DESIGN AND CM_CAD\03-AUTOCAD\04-CIVIL3D\02-SHEETS\M-MECHANICAL FILENAME: M-30-101.DWG PLOT DATE: 4/29/2019 7:52 AM CAD USER: DAVID DAVIDSE
WBWCD Logo.jpg

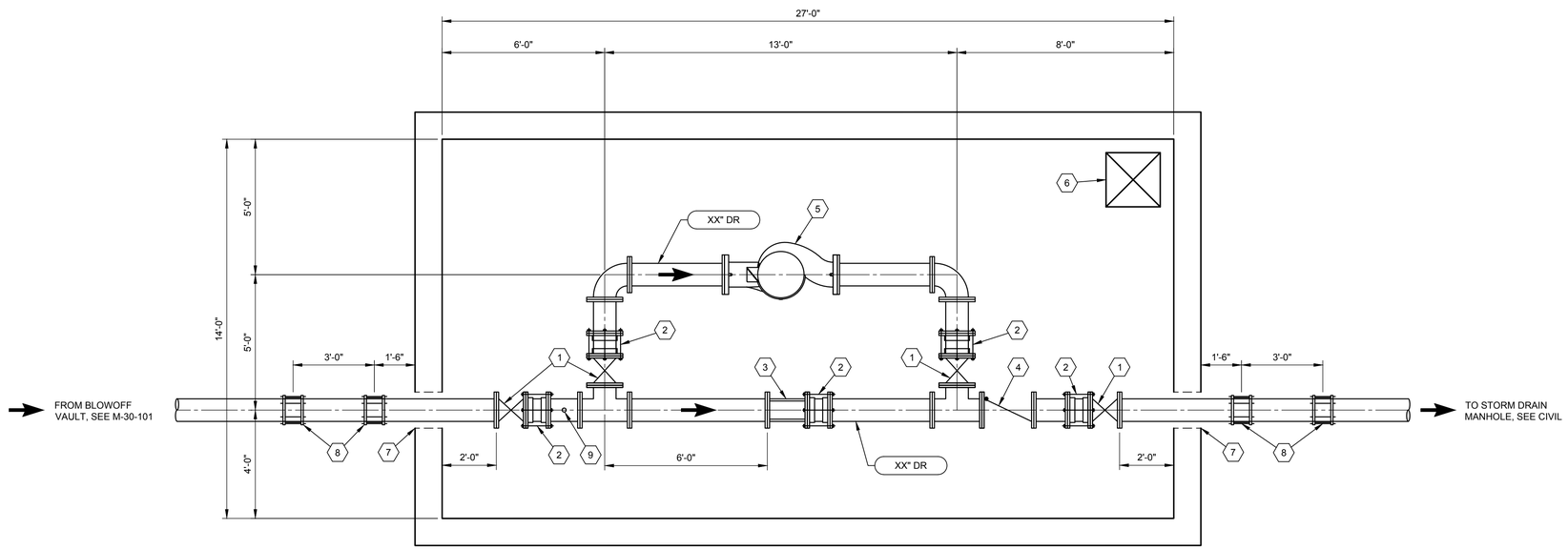

BLOWOFF PUMP STATION - PLAN

SCALE: 3/8" = 1'-0"

GENERAL NOTES:

KEY NOTES:

1. X" GATE VALVE FLxFL
2. X" DISMANTLING JOINT COUPLING
3. X" SLEEVE VALVE FLxFL
4. X" CHECK VALVE FLxFL
5. X" INLINE PUMP
6. 24" SUMP, SEE DETAIL X/XXX
7. PIPE WALL PENETRATION, SEE DETAIL X/XXX
8. 10" FLEXIBLE COUPLING ADAPTER
9. PRESSURE GAUGE

Brown AND Caldwell

Brown & Caldwell
6975 Union Park Center
Salt Lake City, UT

30% DESIGN SUBMITTAL

WEBER BASIN WATER CONSERVANCY DISTRICT

DAVIS AQUEDUCT REACH 1

REVISIONS

REV	DATE	DESCRIPTION

LINE IS 2 INCHES AT FULL SIZE

DESIGNED:
DRAWN:
CHECKED:
CHECKED:
APPROVED: ----

FILENAME
M-30-102.DWG

BC PROJECT NUMBER
152858

CLIENT PROJECT NUMBER
XXXXXXX

MECHANICAL

BLOWOFF PUMP STATION

DRAWING NUMBER
M-30-102

---- SHEET NUMBER OF XX

Path: P:\PROJECTS\WEBER BASIN\152858_DA REACH 1 DESIGN AND CM_CAD\03-AUTOCAD\04-CIVIL\3D\02-SHEETS\M-MECHANICAL FILENAME: M-30-102.DWG PLOT DATE: 4/25/2019 8:05 AM CAD USER: DAVID DAVIDSE
WBWCD Logo.jpg

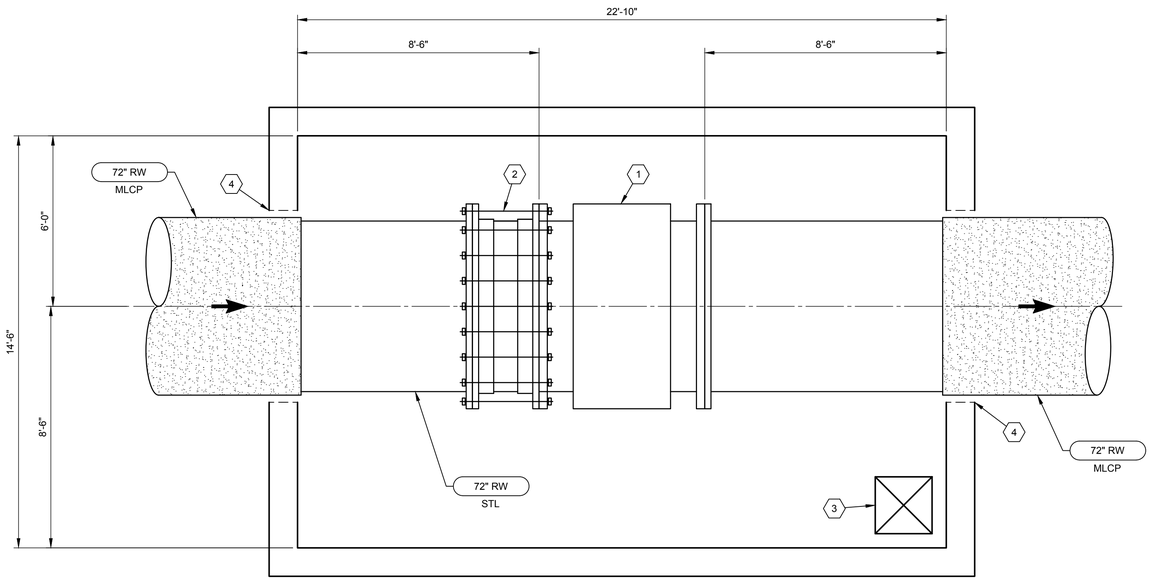

FLOW METER VAULT - PLAN

SCALE: 3/8" = 1'-0"

GENERAL NOTES:

KEY NOTES:

1. 72" FLOW METER FLxFL
2. 72" DISMANTLING JOINT COUPLING
3. 24" SUMP, SEE DETAIL X/XXX
4. PIPE WALL PENETRATION, SEE DETAIL X/XXX

Brown AND Caldwell

Brown & Caldwell
6975 Union Park Center
Salt Lake City, UT

30% DESIGN SUBMITTAL

WEBER BASIN WATER CONSERVANCY DISTRICT

DAVIS AQUEDUCT REACH 1

REVISIONS

REV	DATE	DESCRIPTION

LINE IS 2 INCHES AT FULL SIZE

DESIGNED:
DRAWN:
CHECKED:
CHECKED:
APPROVED: ----

FILENAME
M-30-103.DWG

BC PROJECT NUMBER
152858

CLIENT PROJECT NUMBER
XXXXXXX

MECHANICAL

FLOW METER VAULT

DRAWING NUMBER
M-30-103

SHEET NUMBER ---- OF XX

Path: P:\PROJECTS\WEBER BASIN\152858_DA REACH 1 DESIGN AND CM_CAD\03-AUTOCAD\04-CIVIL\3D\02-SHEETS\M-MECHANICAL FILENAME: M-30-103.DWG PLOT DATE: 4/29/2019 7:50 AM CAD USER: DAVID DAVIDSE
WBWCD Logo.jpg

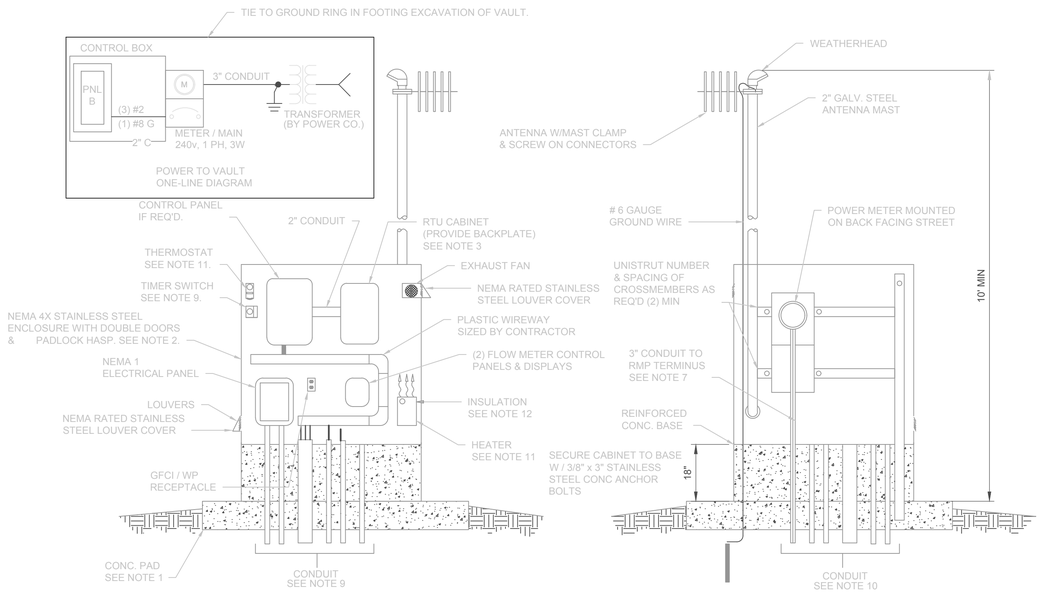

NOTES:

1. PROVIDE 6" THK. CONCRETE PAD EXTENDING 3' IN FRONT & 6" TO BACK & SIDES OF CABINET. RUN #4 REBAR 9" O.C. EACH WAY. SECURE CABINET TO PAD W/ (4) MIN. 1/2" DIA. x 6" LG. STAINLESS 304 SS SEISMIC RATED ANCHOR BOLTS W / MIN 3" EMBEDMENT. SLOPE GRADE TO DRAIN AWAY FROM SLAB.
2. CUSTOMER SHALL BE RESPONSIBLE TO SIZE ENCLOSURE FOR EQUIPMENT . ENCLOSURE SHALL BE NEMA 4X STAINLESS STEEL & SHALL HAVE DOUBLE DOORS W / PADLOCK HASP.
3. PROVIDE & INSTALL 24"x24"x12" HOFFMAN A, G.Q.R.L.P. NEMA 1 ENCLOSURE W / BACKPLATE FOR RTU, PLC & RADIO.
4. CUSTOMER SHALL FURNISH AND INSTALL RTU, RADIO, ANTENNA & CONNECTIONS. CUSTOMER SHALL PROVIDE GROUNDING ROD & GROUNDING CONDUCTOR ALONG ENCLOSURE STAND. CUSTOMER SHALL PROVIDE TERMINAL STRIP FOR ALL CONNECTIONS TO RTU CABINET FROM FLOW METER CONVERTERS, PRESSURE TRANSDUCER, ALARM, ETC.
5. SEPERATE CONDUITS SHALL BE USED FOR POWER LINES & CONTROL / INSTRUMENTATION LINES.
6. ALL ELECTRICAL CONDUITS IN VAULT SHALL BE GRC OR SCHEDULE 80 PVC.
7. CUSTOMER SHALL PROVIDE 3" CONDUIT FOR MAIN POWER FROM CONTROL BOX METER MAIN TO POWER COMPANY TERMINUS, WITH REQUIRED FITTINGS AND APPURTENANCES AND SHALL PROVIDE A PULL STRING INSIDE CONDUIT. POWER COMPANY SHALL PROVIDE 120/240 VOLT SINGLE PHASE 100 AMP SERVICE (TO BE COORDINATED BY CUSTOMER W / POWER COMPANY AND DISTRICT).
8. CUSTOMER SHALL PROVIDE (2) 1" CONDUITS TO VAULT FOR FLOW METERS AND (1) #16 TSP IN 3/4" CONDUIT FOR 4-20mA-DC SIGNAL FROM PRESSURE TRANSDUCER TRANSMITTER TO RTU. SEE DETAIL 2/D-5 FOR METER SPECIFICATION.
9. CUSTOMER SHALL PROVIDE (1) 20 AMP 1 PHASE CB & (3) #12 CONDUCTORS IN 3/4" CONDUIT FOR (2) VAPOR-TIGHT LED LIGHT FIXTURES INSIDE OF VAULT. INSTALL LIGHT SWITCH W / WP COVER IN CLOSE PROXIMITY TO HATCH ENTRY. PROVIDE (1) 20 AMP 1 PHASE CB & (3) #12 CONDUCTORS IN 3/4" CONDUITS FOR (2) GFCI OUTLETS IN WEATHERPROOF ENCLOSURES AND IN-USE COVERS INSIDE OF THE VAULT. INSTALL OUTLETS & SWITCHES 4' MIN ABOVE FLOOR. PROVIDE (1) 20 AMP 1 PHSE CB & (3) #12 WIRE IN 3/4" CONDUIT FOR SUMP PUMP W / NEMA 5-15R OUTLET WITH IN-SERVICE COVER OVER SUMP FOR PUMP. PROVIDE (1) 20 AMP 1 POLE CB & (3) #12 WIRE IN 3/4" CONDUIT FOR EXHAUST FAN. PROVIDE 24-HOUR ADJUSTABLE TIMER SWITCH TO CYCLE THE FAN & LIGHTS ON FOR ONE HOUR INCREMENTS TWO TIMES PER DAY. PROVIDE BY-PASS FROM TIMER CONTROL FOR HATCH ACCESS LIGHT SWITCH. ALL OUTLETS TO HAVE GFCI PROTECTION.
10. CONDUIT NUMBER & SIZE SHOWN ON DRAWING DETAIL ARE ONLY REPRESENTATIONAL. ACTUAL NUMBER & SIZE SHALL BE AS REQ'D (2) MIN. ADDITIONAL 2" SPARE CONDUITS SHALL BE INSTALLED FROM THE CONTROL BOX TO THE VAULT W / PULL STRINGS.
11. SIZE & PROVIDE HEATER TO MAINTAIN TEMPERATURE FOR INTERNAL EQUIPMENT ABOVE 40°F (5°C).
12. PROVIDE 2" THICK FOAM INSULATION INSIDE OF ENCLOSURE TOP, BOTTOM, BACK, SIDES & DOORS. SECURE INSULATION W / ADHESIVE.
13. ALL JUNCTION BOXES IN VAULT SHALL BE STAINLESS STEEL NEMA 4X BOXES.
14. ALL WIRE SHALL BE XHHW-2 COPPER WIRE.

Brown & Caldwell
6975 Union Park Center
Salt Lake City, UT

30% DESIGN SUBMITTAL

WEBER BASIN WATER CONSERVANCY DISTRICT

DAVIS AQUEDUCT REACH 1

REVISIONS

REV	DATE	DESCRIPTION

LINE IS 2 INCHES AT FULL SIZE

DESIGNED:
DRAWN:
CHECKED:
CHECKED:
APPROVED: ----

FILENAME
E-00-001 ELECTRICAL DETAILS.DWG
BC PROJECT NUMBER
152858
CLIENT PROJECT NUMBER
XXXXXXX

ELECTRICAL

DRAWING NUMBER
E-00-001

---- SHEET NUMBER OF XX

Path: \\BCSLCFP01\PROJECTS\PROJECTS\WEBER BASIN\152858_DA REACH 1 DESIGN AND CM_CAD\03-AUTOCAD\04-CIVIL3D\02-SHEETS\E-ELECTRICAL FILENAME: E-00-001 ELECTRICAL DETAILS.DWG PLOT DATE: 8/9/2019 10:28 AM CAD USER: JOSHUA HOBART
WBWCD Logo.jpg

FUNCTIONAL IDENTIFICATION

VARIABLE	MEASURED OR INITIATING VARIABLE DESCRIPTION	MODIFIER	READOUT OR PASSIVE FUNCTION	OUTPUT FUNCTION	MODIFIER
A	ANALYSIS		ALARM		
B	BURNER, COMBUSTION				
C	CONDUCTIVITY			CONTROL	CLOSE
D	DENSITY, SPECIFIC GRAVITY	DIFFERENTIAL			DEVIATION
E	VOLTAGE, SOLENOID		PRIMARY ELEMENT		
F	FLOW, FLOW RATE	RATIO			
G	FIRE, SMOKE		GLASS		
H	HAND				HIGH
I	CURRENT		INDICATE		
J	POWER		SCAN		
K	TIME, SCHEDULE	TIME RATE OF CHANGE		CONTROL STATION	
L	LEVEL		LIGHT		LOW
M	MOISTURE, HUMIDITY, MOTION	MOMENTARY			MIDDLE, INTERMEDIATE
N	EQUIPMENT STATUS				
O	DISSOLVED OXYGEN		ORIFICE		OPEN
P	PRESSURE, VACUUM		POINT (TEST) CONNECTION		
Q	QUANTITY	INTEGRATE, TOTALIZE			
R	RADIATION		RECORD		RUN
S	SPEED, FREQUENCY	SAFETY		SWITCH	STOP
T	TEMPERATURE			TRANSMIT	
U	MULTIVARIABLE		MULTIFUNCTION	MULTIFUNCTION	MULTIFUNCTION
V	VIBRATION, MECHANICAL ANALYSIS			VALVE, DAMPER, LOUVER	
W	WEIGHT, FORCE, TORQUE		WELL, PROBE		
X	UNCLASSIFIED	X AXIS			
Y	EVENT, STATE OR PRESENCE	Y AXIS		RELAY, COMPUTE, CONVERT	
Z	POSITION, DIMENSION	Z AXIS		DRIVER, ACTUATOR, FINAL CONTROL ELEMENT	

INSTRUMENT TAG AND LOOP IDENTIFICATION

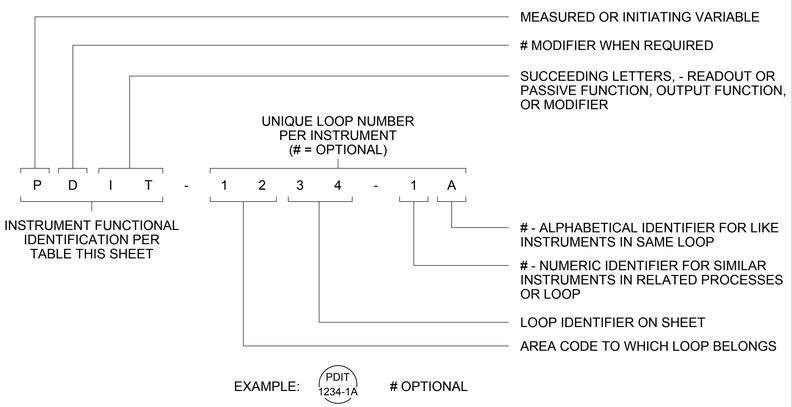

EQUIPMENT IDENTIFICATION SYSTEM

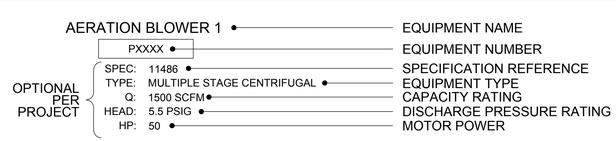

INSTRUMENT SIGNAL LINES

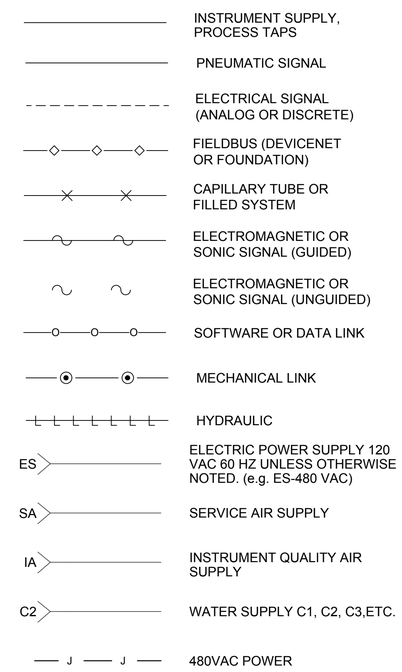

TYPICAL INSTRUMENT IDENTIFICATION

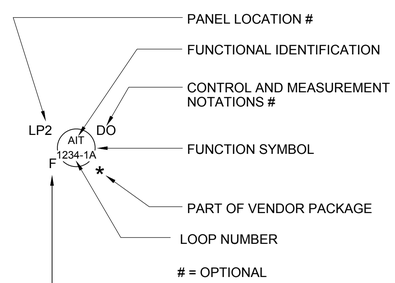

NETWORK TYPE	
F	FOUNDATION FIELDBUS
D	DEVICENET
E	ETHERNET
P	PROFIBUS
PN	PROFINET
M-RTU	MODBUS RTU
M-TCP	MODBUS TCP
CIP	CONTROL INDUSTRIAL PROTOCOL
E-SNMP	SIMPLE NETWORK MANAGEMENT PROTOCOL

PROCESS AND SIGNAL CROSS REFERENCE SYSTEM

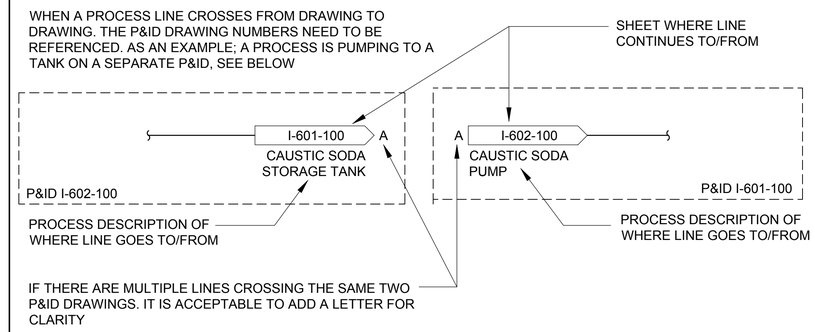

PROCESS LINES

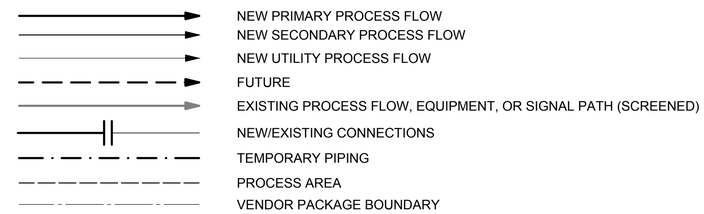

CONTROL AND MEASUREMENT NOTATIONS

ACK	ACKNOWLEDGE
AM	AUTO/MAN
BYP	BYPASS
CL	CLOSE
CL2	CHLORINE
CMAT	COMPUTER/MANUAL/AUTO/TRACKING
COMB	COMBUSTIBLE GAS
CP	CONTROL POWER
COND	CONDUCTIVITY
DEC	DECREASE
DO	DISSOLVED OXYGEN
ESP	EMERGENCY STOP
FWD	FORWARD
F/R	FORWARD/REVERSE
F/S	FAST/SLOW
HLOA	HIGH/LOW/OFF/AUTO
HOA	HAND/OFF/AUTO
HOAL	HAND/OFF/AUTO/LOCAL
HOR	HAND/OFF/REMOTE
INC	INCREASE
JOA	JOG/OFF/AUTO
LL	LEAD/LAG
LOR	LOCAL/OFF/REMOTE
LOS	LOCKOUT STOP
L/R	LOCAL/REMOTE
M/A LS	MAN/AUTO LOADING STATION
OAC	OPEN/AUTO/CLOSE
OCP	PURGE VALVE OP/CL/PC
OL	OVERLOAD
OP	OPEN
OSC/LP	OPEN/STOP/CLOSE WITH LOCAL/REMOTE SELECT
PA	PAUSE
PAL	LOW PRESSURE
PB	PUSH BUTTON
pH	pH
POT	POTENTIOMETER
RDY	READY
REV	REVERSE
RNG	RUNNING
ROF	REVERSE/OFF/FORWARD
RST	RESET
SO2	SULFUR DIOXIDE
SP	STOP
ST	START
TCP	TEST/CLOSE/PC
T/S	TEST/NORMAL/SILENCE
TBL	TROUBLE

GENERAL NOTES:

1. THIS DRAWING IS GENERAL IN NATURE. SOME SYMBOLS AND IDENTIFICATIONS SHOWN HEREON MAY NOT BE USED ON THE CONTRACT DRAWINGS.
2. SYMBOLS ARE ARRANGED ON SPECIFIC DRAWINGS AND IN CATEGORIES FOR CONVENIENCE ONLY; SYMBOLS MAY BE USED ON ANY OF THE CONTRACT DRAWINGS.

Brown AND Caldwell

WEBER BASIN WATER CONSERVANCY DISTRICT

DAVIS AQUEDUCT REACH 1

REVISIONS

REV	DATE	DESCRIPTION

LINE IS 2 INCHES AT FULL SIZE

DESIGNED:
DRAWN:
CHECKED:
CHECKED:
APPROVED: ----

FILENAME
I-20-101
BC PROJECT NUMBER
151224
CLIENT PROJECT NUMBER

INSTRUMENTATION LEGENDS AND SYMBOLS - 1

DRAWING NUMBER
I-00-001

SHEET NUMBER
XX OF

Path: \\BCSLCFP01\PROJECTS\PROJECTS\WEBER BASIN\152858_DA REACH 1 DESIGN AND CM_CAD\03-AUTOCAD\03-PID FILENAME: GI-1.DWG PLOT DATE: 4/24/2019 12:30 PM CAD USER: KENNY NUNEZ
WBWCD Logo.jpg

MISCELLANEOUS SYMBOLS

- M — MCC (MOTOR CONTROL/STARTER)
- P — PURGE OR FLUSHING DEVICE
- R — RESET FOR LATCH-TYPE OPERATOR
- C — SEAL WATER CONTROL UNIT
- I — INTERLOCKING OR CONTROL FUNCTION
- IS — INTRINSIC SAFETY BARRIER
- △ DISCRETE INPUT
- ▽ DISCRETE OUTPUT
- ▲ ANALOG INPUT
- ▼ ANALOG OUTPUT
- CAMERA (CCTV)
- VFD — VARIABLE FREQUENCY DRIVE
- VSD — VARIABLE SPEED DRIVE

ACTUATORS/MOTORS/POWER

- ASD — ADJUSTABLE SPEED DRIVE (MECHANICAL)
- ROTARY PISTON ACTUATORS, VALVE OR GATE
- LINEAR PISTON ACTUATORS, VALVE OR GATE
- S — SOLENOID ACTUATOR, VALVE
- MANUAL OR HAND ACTUATOR, VALVE OR GATE (OR BLANK)
- M — MOTOR (ACTUATOR, VALVE , GATE OR EQUIPMENT)
- ENGINE
- EJECTOR, PNEUMATIC
- GENERATOR

PRIMARY ELEMENT SYMBOLS

- ORIFICE PLATE
- VENTURI OR FLOW TUBE
- NOZZLE FLOW
- PITOT TUBE
- PROPELLER OR TURBINE METER
- FLUME
- WEIR
- VARIABLE AREA FLOW INDICATOR (ROTAMETER) — OR — FI
- DIAPHRAGM SEAL
- IN-LINE ANNULAR SEAL
- T 120V — HEAT TRACE AND INSULATE
- T 120V — HEAT BLANKET
- M — MAGNETIC FLOWMETER
- SONIC FLOWMETER (DOPPLER OR TRANSIT TIME)
- POSITIVE DISPLACEMENT METER
- ΔT — THERMAL FLOW ELEMENT
- VORTEX FLOW ELEMENT
- CORIOLIS FLOW ELEMENT
- FLOAT LEVEL ELEMENT
- ULTRASONIC LEVEL ELEMENT
- BUBBLER LEVEL TUBE
- SUBMERSIBLE LEVEL TRANSMITTER
- HYDROSTATIC LEVEL PROBE
- RADAR OR ULTRASONIC LEVEL ELEMENT
- ANNUBAR, PITOT TUBE
- AVERAGING PITOT TUBE

VALVES

NORMALLY OPEN		NORMALLY CLOSED
	GATE VALVE	
	PLUG VALVE	
	BALL VALVE	
	GLOBE VALVE	
	NEEDLE VALVE	
	KNIFE GATE VALVE	
	DIAPHRAGM VALVE	
	BUTTERFLY VALVE	
	ANGLE VALVE	
	THREE WAY VALVE	
	FOUR WAY VALVE	
	FLOAT VALVE	
	PINCH VALVE	
	BALANCING COCK	
	THERMOSTATICALLY CONTROLLED VALVE	

- DOUBLE LEAF CHECK VALVE
- CHECK VALVE
- BALL CHECK VALVE
- PUMP DISCHARGE VALVE
- GAUGE OR ROOT VALVE
- PRESSURE AND VACUUM RELIEF VALVE
- VACUUM RELIEF VALVE
- PRESSURE RELIEF VALVE
- IN-LINE SPRING LOADED RELIEF VALVE
- PRESSURE REGULATING VALVE (SELF-CONTAINED)
- BACK PRESSURE REGULATING VALVE (SELF-CONTAINED)
- FUSIBLE LINK
- S — SOLENOID VALVE
- DIAPHRAGM OPERATED VALVE
- PRESSURE BALANCE OPERATED VALVE
- M — MOTOR OPERATED VALVE
- M — MOTOR OPERATED VALVE, MODULATING

NOTE: USE VALVE BODY SYMBOL TO MATCH TYPE OF VALVE.

- PISTON OPERATED VALVE
- TELESCOPING VALVE
- MUD VALVE
- ANTI SIPHON VALVE
- LIFT CHECK VALVE
- BRAIDED FLEX CONNECTOR

FUNCTION SYMBOLS

- SHARED DISPLAY, PROCESS CONTROL SYSTEM
- SOFTWARE FUNCTIONALITY
- FIELD OR PANEL DEVICE

LOCATION AND ACCESSIBILITY MODIFIERS FOR FUNCTION SYMBOLS

- STAND ALONE DEVICE, OPERATOR ACCESSIBLE
- LOCATED ON FRONT OF PANEL OR CONSOLE, OPERATOR ACCESSIBLE
- LOCATED IN REAR OF PANEL OR CONSOLE, OPERATOR INACCESSIBLE

INSTRUMENTATION SYMBOLS

- INTEGRAL INSTRUMENT — XXX XXX — PRIMARY ELEMENT SYMBOL
- XXX XXX — CLOSE COUPLED INSTRUMENT — PRIMARY ELEMENT SYMBOL
- XXX XXX — SEPARATE OR REMOTE MOUNTED INSTRUMENT — PRIMARY ELEMENT SYMBOL
- XXX XXX XXX XXX XXX XXX — MULTI VARIABLE INSTRUMENT
- XXX XXX — SEPARATE OR REMOTE MOUNTED INSTRUMENT — PRIMARY ELEMENT SYMBOL — FLANGE OR ELEMENT TAPS
- XXX XXX — SEPARATE OR REMOTE MOUNTED INSTRUMENT — PRIMARY ELEMENT SYMBOL — PIPE TAPS
- XXX XXX — SEPARATE OR REMOTE MOUNTED INSTRUMENT — PRIMARY ELEMENT SYMBOL — COMBINATION TAPS
- XXX XXX — SINGLE VARIABLE INSTRUMENT

SLIDE AND SLUICE GATES

NORMALLY OPEN		NORMALLY CLOSED
	FLAP GATE	
NO	BUTTERFLY GATE	NC
	STOP GATE	
	SLIDE GATE	
	SLUICE GATE	

GENERAL NOTES:

1. THIS DRAWING IS GENERAL IN NATURE. SOME SYMBOLS AND IDENTIFICATIONS SHOWN HEREON MAY NOT BE USED ON THE CONTRACT DRAWINGS.
2. SYMBOLS ARE ARRANGED ON SPECIFIC DRAWINGS AND IN CATEGORIES FOR CONVENIENCE ONLY; SYMBOLS MAY BE USED ON ANY OF THE CONTRACT DRAWINGS.

Brown AND Caldwell
Brown & Caldwell
6975 Union Park Center
Salt Lake City, UT

30% DESIGN SUBMITTAL

WEBER BASIN WATER CONSERVANCY DISTRICT

DAVIS AQUEDUCT REACH 1

REVISIONS

REV	DATE	DESCRIPTION
-	-	---
-	-	---
-	-	---
-	-	---
-	-	---
-	-	---
-	-	--
-	-	---
-	-	---

LINE IS 2 INCHES AT FULL SIZE

DESIGNED:
DRAWN:
CHECKED:
CHECKED:
APPROVED: ----

FILENAME GI-2.DWG
BC PROJECT NUMBER 152858
CLIENT PROJECT NUMBER XXXXXXX

INSTRUMENTATION

LEGENDS AND SYMBOLS - 2••

DRAWING NUMBER
I-00-002

SHEET NUMBER ---- OF XX

Path: \\BCSLCFP01\PROJECTS\PROJECTS\WEBER BASIN\152858_DA REACH 1 DESIGN AND CM_CAD\03-AUTOCAD\03-PID FILENAME: GI-2.DWG PLOT DATE: 4/24/2019 12:36 PM CAD USER: KENNY NUNEZ
WBWCD.Logo.jpg

PUMPS

- PUMP, CENTRIFUGAL
- PUMP, DIAGHRAGM
- PUMP, GEAR
- PUMP, METERING
- PUMP, PERISTALTIC
- PUMP, PROGRESSING CAVITY
- PUMP, ROTARY LOBE
- PUMP, SUBMERSIBLE
- PUMP, JET
- PUMP, VERTICAL

BLOWERS/COMPRESSORS

- BLOWER OR CENTRIFUGAL FAN
- BLOWER OR COMPRESSOR, LIQUID RING
- BLOWER OR COMPRESSOR, ROTARY LOBE
- COMPRESSOR, ROTARY SCREW
- COMPRESSOR, ROTARY SLIDING VANE
- COMPRESSOR, PISTON

PIPE LINE DEVICES

- TRAP
- SEDIMENT TRAP
- GAS DRIP TRAP
- SEPARATOR/ DRYER
- PIPELINE FILTER
- RUPTURE DISK (VACUUM RELIEF)
- RUPTURE DISK (PRESSURE RELIEF)
- CONNECTION BETWEEN NEW AND EXISTING PIPING
- UNION
- QUICK CONNECTOR
- CAP OR PLUG
- BLIND FLANGE
- FLEX CONNECTOR
- FABRIC EXPANSION JOINT
- VENT TO ROOF
- VENT
- STEAM VENT
- AUTOMATIC VENT
- MANUAL VENT
- STRAINERS
- FOOT VALVE
- AIR SEPARATOR
- DRAIN
- DRAIN VALVE
- CALIBRATION CHAMBER
- PULSATION DAMPENER
- INJECTOR
- FLAME TRAP
- FLAME TRAP WITH THERMO SHUTOFF ASSEMBLY
- FLAME CHECK
- SAMPLING AND FLUSHING CONNECTIONS
- SUCTION DIFFUSER
- TEMPERATURE WELL
- FLOW STRAIGHTENING VANES
- PRESSURE REDUCING ASSEMBLY
- AMMONIA UNION
- DAMPER
- SIGHT GLASS
- PIG LAUNCHER/ RECEIVER
- REDUCER
- FLEX COUPLING

HVAC RELATED

- FAN, INLINE
- CHILLER
- FILTER OR FILTER-SILENCER INLET AIR
- BOILER
- CHILLER

MIXERS

- MIXER
- DRAFT TUBE MIXER
- MIXER, INLINE STATIC

GENERAL NOTES:

1. THIS DRAWING IS GENERAL IN NATURE. SOME SYMBOLS AND IDENTIFICATIONS SHOWN HEREON MAY NOT BE USED ON THE CONTRACT DRAWINGS.
2. SYMBOLS ARE ARRANGED ON SPECIFIC DRAWINGS AND IN CATEGORIES FOR CONVENIENCE ONLY; SYMBOLS MAY BE USED ON ANY OF THE CONTRACT DRAWINGS.

Brown AND Caldwell

Brown & Caldwell
6975 Union Park Center
Salt Lake City, UT

30% DESIGN SUBMITTAL

WEBER BASIN WATER CONSERVANCY DISTRICT

DAVIS AQUEDUCT REACH 1

REVISIONS

REV	DATE	DESCRIPTION

LINE IS 2 INCHES AT FULL SIZE

DESIGNED:
DRAWN:
CHECKED:
CHECKED:
APPROVED: ----

FILENAME
GI-3.DWG

BC PROJECT NUMBER
152858

CLIENT PROJECT NUMBER
XXXXXXX

INSTRUMENTATION

LEGENDS AND SYMBOLS - 3

DRAWING NUMBER
I-00-003

SHEET NUMBER ---- OF XX

Path: \\BCSLCFP01\PROJECTS\PROJECTS\WEBER BASIN\152858_DA REACH 1 DESIGN AND CM_CAD\03-AUTOCAD\03-PID FILENAME: GI-3.DWG PLOT DATE: 4/24/2019 12:51 PM CAD USER: KENNY NUNEZ

WBWCD Logo.jpg

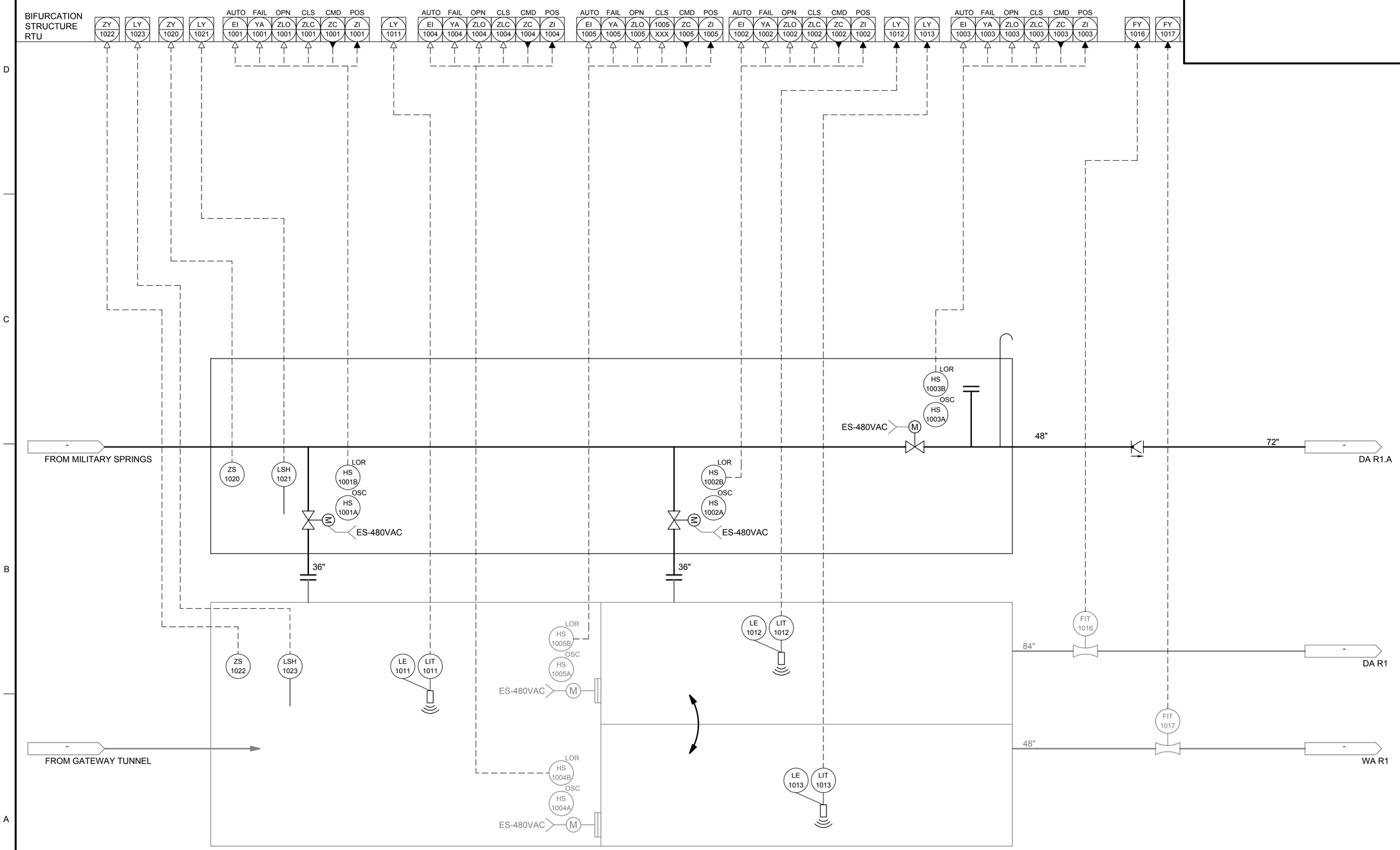

GENERAL NOTES

1.

Brown AND Caldwell

Brown & Caldwell
6975 Union Park Center
Salt Lake City, UT

30% DESIGN SUBMITTAL

WEBER BASIN WATER CONSERVANCY DISTRICT

DAVIS AQUEDUCT REACH 1

REVISIONS

REV	DATE	DESCRIPTION

LINE IS 2 INCHES AT FULL SIZE

DESIGNED:
DRAWN:
CHECKED:
CHECKED:
APPROVED:

FILENAME
PI-1.DWG

BC PROJECT NUMBER
152858

CLIENT PROJECT NUMBER
XXXXXXX

INSTRUMENTATION

BIFURCATION P&ID

DRAWING NUMBER
I-10-101

SHEET NUMBER ---- OF XX

Path: \\BCSLCFP01\PROJECTS\PROJECTS\WEBER BASIN\152858_DA REACH 1 DESIGN AND CM_CAD\03-AUTOCAD\03-PID FILENAME: PI-1.DWG PLOT DATE: 4/26/2019 2:55 PM CAD USER: KENNY NUNEZ

WBWCD Logo.jpg

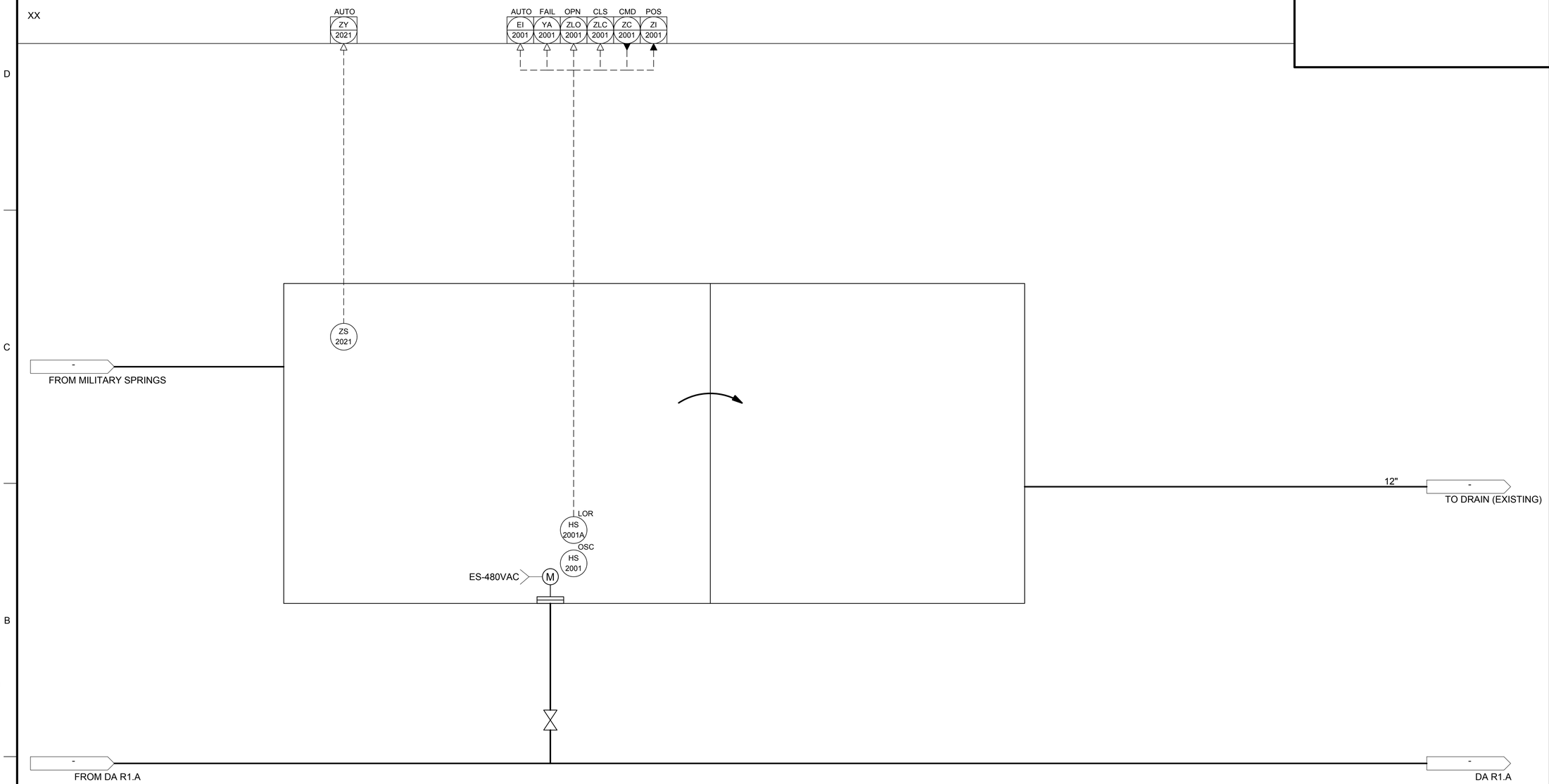

GENERAL NOTES

1.

Brown AND Caldwell

Brown & Caldwell
6975 Union Park Center
Salt Lake City, UT

30% DESIGN SUBMITTAL

WEBER BASIN WATER CONSERVANCY DISTRICT

DAVIS AQUEDUCT REACH 1

REVISIONS

REV	DATE	DESCRIPTION

LINE IS 2 INCHES AT FULL SIZE

DESIGNED:
DRAWN:
CHECKED:
CHECKED:
APPROVED:

FILENAME
PI-2.DWG

BC PROJECT NUMBER
152858

CLIENT PROJECT NUMBER
XXXXXXX

INSTRUMENTATION

MILITARY SPRINGS STRUCTUREMILITARY SPRINGS STRUCTURE

DRAWING NUMBER
I-20-101

SHEET NUMBER ---- OF XX

Path: \\BCSLCFP01\PROJECTS\PROJECTS\WEBER BASIN\152858_DA REACH 1 DESIGN AND CM_CAD\03-AUTOCAD\03-PID FILENAME: PI-2.DWG PLOT DATE: 4/26/2019 2:56 PM CAD USER: KENNY NUNEZ

WBWCD Logo.jpg

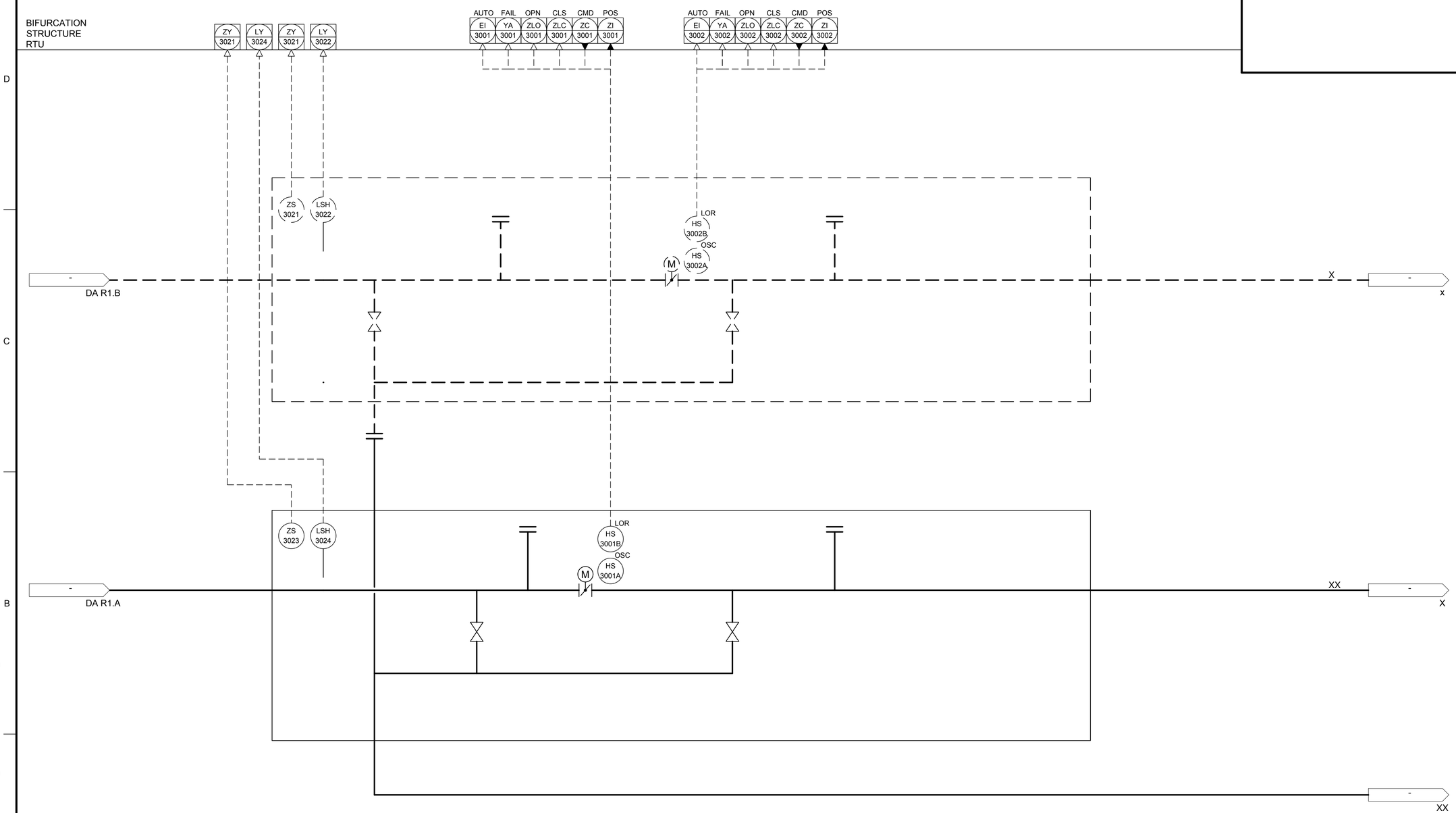

GENERAL NOTES

1.

Brown AND Caldwell

Brown & Caldwell
6975 Union Park Center
Salt Lake City, UT

30% DESIGN SUBMITTAL

WEBER BASIN WATER CONSERVANCY DISTRICT

DAVIS AQUEDUCT REACH 1

REVISIONS

REV	DATE	DESCRIPTION

LINE IS 2 INCHES AT FULL SIZE

DESIGNED:
DRAWN:
CHECKED:
CHECKED:
APPROVED:

FILENAME
I-30-101

BC PROJECT NUMBER
152858

CLIENT PROJECT NUMBER
XXXXXXX

INSTRUMENTATION

BLOW OFF VALVEBLOW OFF VALVE

DRAWING NUMBER
I-30-101

SHEET NUMBER ---- OF XX

Path: \\BCSLCFP01\PROJECTS\PROJECTS\WEBER BASIN\152858_DA REACH 1 DESIGN AND CM_CAD\03-AUTOCAD\03-PID FILENAME: PI-3.DWG PLOT DATE: 4/26/2019 3:11 PM CAD USER: KENNY NUNEZ

WBWCD Logo.jpg

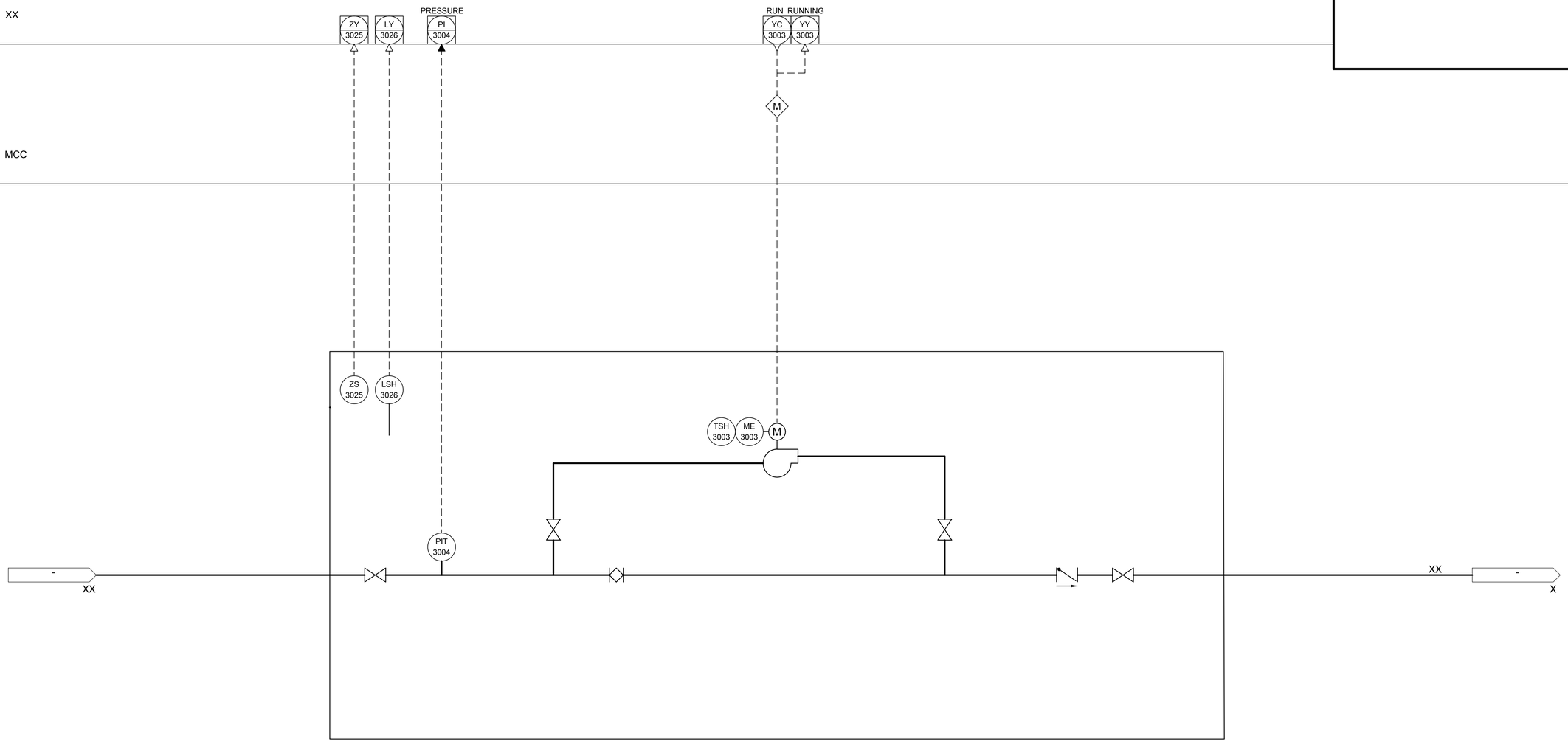

GENERAL NOTES

1.

Brown AND Caldwell

Brown & Caldwell
6975 Union Park Center
Salt Lake City, UT

30% DESIGN SUBMITTAL

WEBER BASIN WATER CONSERVANCY DISTRICT

DAVIS AQUEDUCT REACH 1

REVISIONS

REV	DATE	DESCRIPTION

LINE IS 2 INCHES AT FULL SIZE

DESIGNED:
DRAWN:
CHECKED:
CHECKED:
APPROVED: ----

FILENAME
PI-4.DWG

BC PROJECT NUMBER
152858

CLIENT PROJECT NUMBER
XXXXXXX

INSTRUMENTATION

BLOW OFF VALVEBLOW OFF VALVE

DRAWING NUMBER
I-30-102

XX SHEET NUMBER OF XX

Path: \\BCSLCFP01\PROJECTS\PROJECTS\WEBER BASIN\152858_DA REACH 1 DESIGN AND CM_CAD\03-AUTOCAD\03-PID FILENAME: PI-4.DWG PLOT DATE: 4/26/2019 2:59 PM CAD USER: KENNY NUNEZ

\WBWCD Logo.jpg

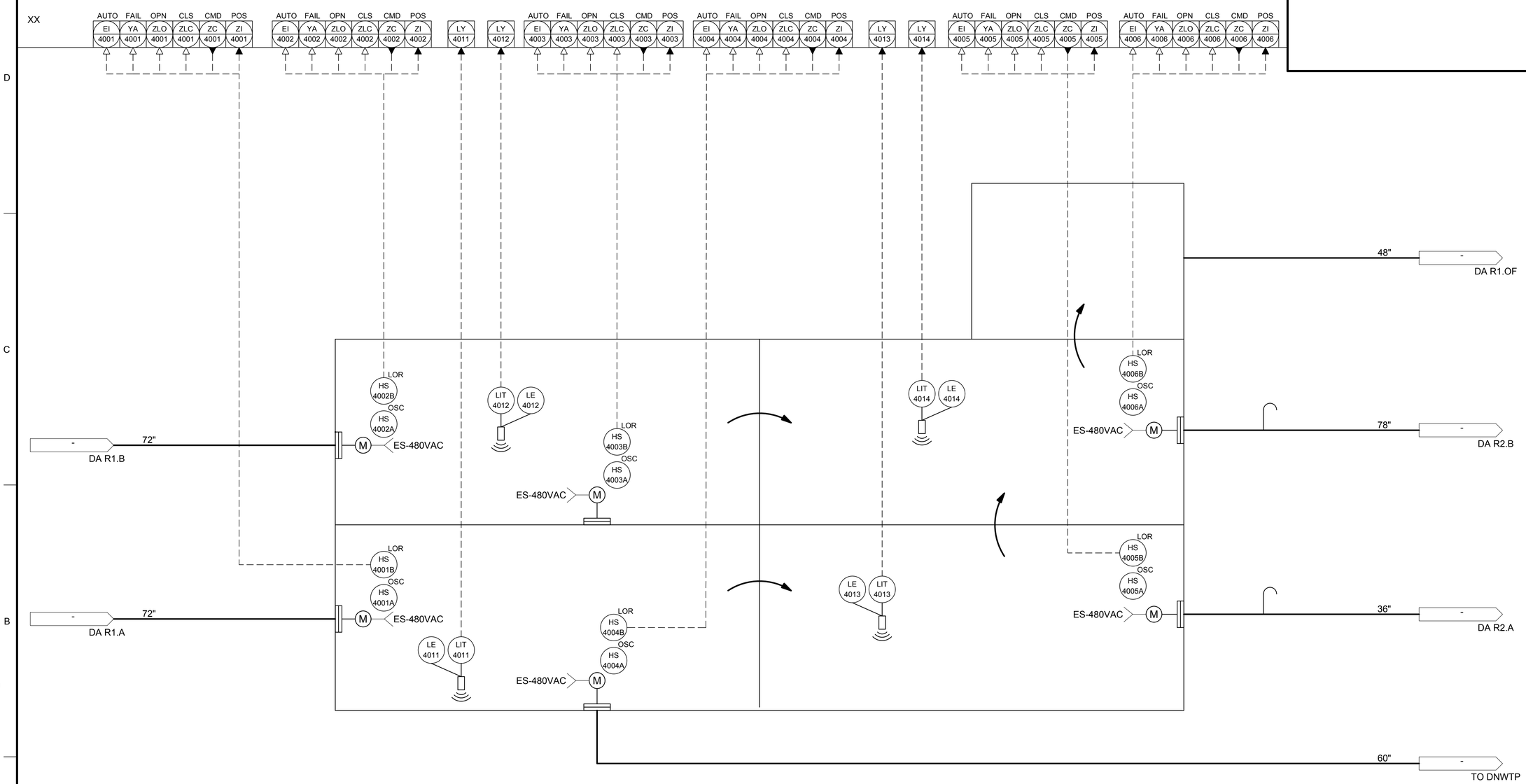

GENERAL NOTES

1.

Brown AND Caldwell

Brown & Caldwell
6975 Union Park Center
Salt Lake City, UT

30% DESIGN SUBMITTAL

WEBER BASIN WATER CONSERVANCY DISTRICT

DAVIS AQUEDUCT REACH 1

REVISIONS

REV	DATE	DESCRIPTION

LINE IS 2 INCHES AT FULL SIZE

DESIGNED:
DRAWN:
CHECKED:
CHECKED:
APPROVED:

FILENAME
PI-5.DWG

BC PROJECT NUMBER
152858

CLIENT PROJECT NUMBER
XXXXXXX

INSTRUMENTATION

WEST VENT STRUCTUREWEST VENT STRUCTURE

DRAWING NUMBER
I-40-101

XX SHEET NUMBER OF XX

Path: \\BGSLCFP01\PROJECTS\PROJECTS\WEBER BASIN\152858_DA REACH 1 DESIGN AND CM_CAD\03-AUTOCAD\03-PID FILENAME: PI-5.DWG PLOT DATE: 4/26/2019 3:00 PM CAD USER: KENNY NUNEZ
WBWCD Logo.jpg

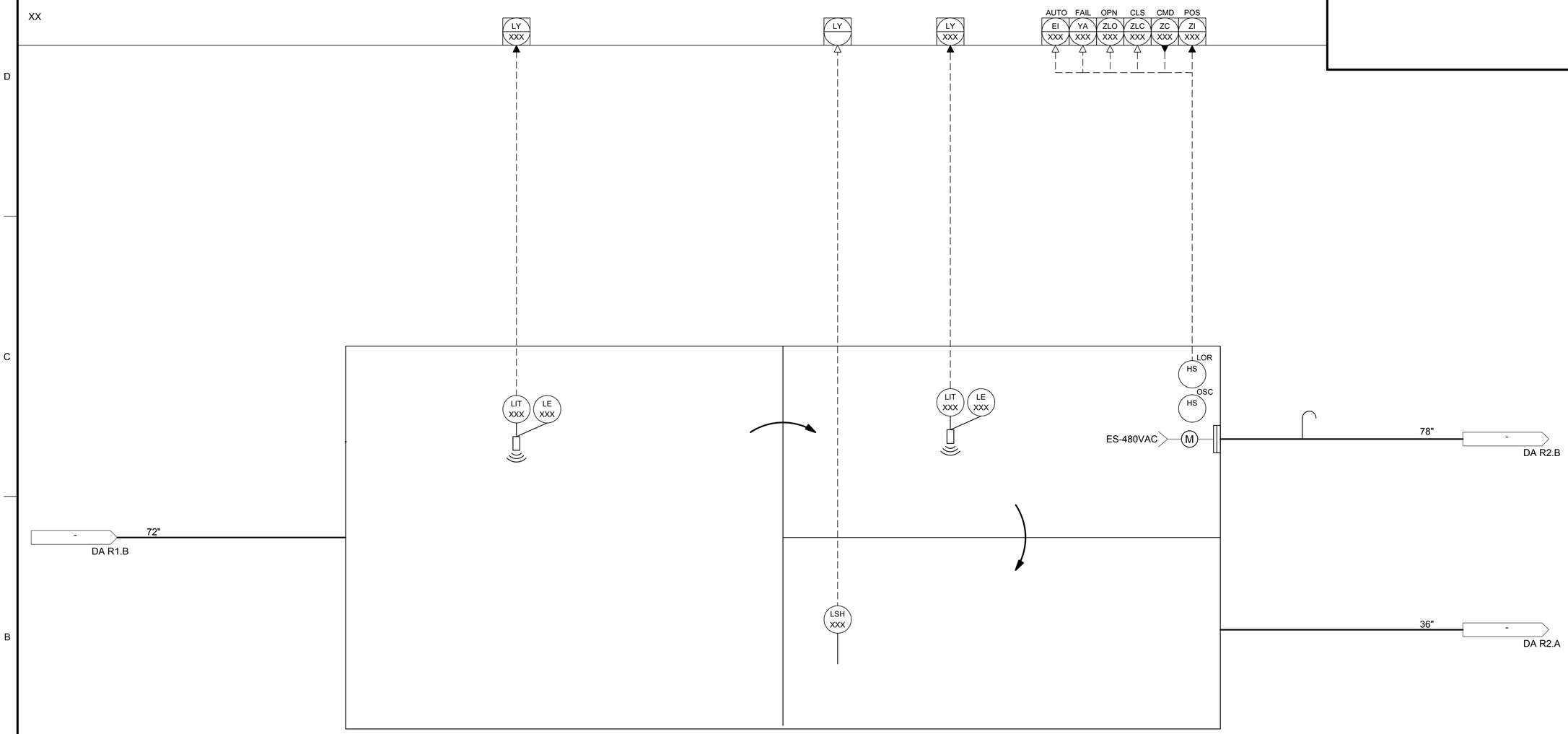

GENERAL NOTES

1.

Brown AND Caldwell

Brown & Caldwell
6975 Union Park Center
Salt Lake City, UT

30% DESIGN SUBMITTAL

WEBER BASIN WATER CONSERVANCY DISTRICT

DAVIS AQUEDUCT REACH 1

REVISIONS

REV	DATE	DESCRIPTION

LINE IS 2 INCHES AT FULL SIZE

DESIGNED:
DRAWN:
CHECKED:
CHECKED:
APPROVED: ----

FILENAME
PI-6.DWG

BC PROJECT NUMBER
152858

CLIENT PROJECT NUMBER
XXXXXXX

INSTRUMENTATION

EAST VENT STRUCTURE

DRAWING NUMBER
I-50-101

XX SHEET NUMBER OF XX

Path: \\BCSLCFP01\PROJECTS\PROJECTS\WEBER BASIN\152858_DA REACH 1 DESIGN AND CM_CAD\03-AUTOCAD\03-PID FILENAME: PI-6.DWG PLOT DATE: 4/24/2019 1:09 PM CAD USER: KENNY NUNEZ

WBWCD Logo.jpg

APPENDIX B

Correspondence

GARY R. HERBERT
Governor

SPENCER J. COX
Lieutenant Governor

State of Utah
DEPARTMENT OF NATURAL RESOURCES

MICHAEL R. STYLER
Executive Director

Utah Geological Survey

R. William Keach II
State Geologist/Division Director

November 19, 2019

Kevin Kilpatrick
HDR Engineering, Inc.
2825 East Cottonwood Parkway, Suite 200
Salt Lake City UT 84121-7077

RE: Paleontological File Search and Recommendations for the Weber Basin Parallel Pipeline Project, Davis County, Utah
U.C.A. 79-3-508 (Paleontological) Compliance; Request for Confirmation of Literature Search

Dear Kevin:

I have conducted a paleontological file search for the Weber Basin Parallel Pipeline Project in response to your request of November 19, 2019. There are no paleontological localities recorded in our files within or near this project area. Quaternary and Recent alluvial and lacustrine deposits and artificial fill that are exposed along this project right-of-way have a low potential for yielding significant fossil localities (PFYC 1 - 2). Unless fossils are discovered as a result of construction activities this project should have no impact on paleontological resources.

If you have any questions, please call me at (801) 537-3311.

Sincerely,

Martha Hayden

Martha Hayden
Paleontological Assistant

1594 West North Temple, Suite 3110, PO Box 146100, Salt Lake City, UT 84114-6100
telephone (801) 537-3300 • facsimile (801) 537-3400 • TTY (801) 538-7458 • *geology.utah.gov*

UTAH DNR GEOLOGICAL SURVEY

GARY R. HERBERT
Governor

SPENCER J. COX
Lieutenant Governor

Utah Division of
State History

Christopher Merritt
State Historic Preservation Officer

Kevin Fayles
Interim Director

May 14, 2020

Kent Kofford
Area Manager
Bureau of Reclamation
302 East 1860 South
Provo, Utah 84606-7317

RE: The Weber Basin Water Conservancy District Davis Aqueduct Parallel Pipeline Project, Davis County, Utah

For future correspondence, please reference Case No. 20-2019

Dear Mr. Kofford,

The Utah State Historic Preservation Office received your request for our comment on the above-referenced undertaking on May 13, 2020.

We concur with your determinations of eligibility and No Adverse Effect for this undertaking.

This letter serves as our comment on the determinations you have made within the consultation process specified in §36CFR800.4. If you have questions, please contact me at 801-245-7246 or by email at sagardy@utah.gov.

Sincerely,

Savanna Agardy
Compliance Archaeologist