Investigations of Copper Sulfate for Aquatic Weed Control

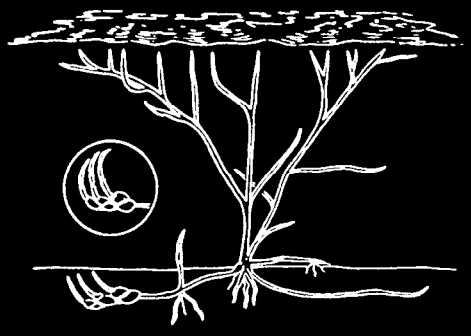

A Water Resources Technical Publication

RESEARCH REPORT NO. 27

United States Department of the
INTERIOR
Bureau of Reclamation

RESEARCH REPORT No. 27 • A WATER RESOURCES TECHNICAL PUBLICATION

Investigations of Copper Sulfate for Aquatic Weed Control

By: T. R. BARTLEY
Former Head, Environmental Sciences Section
Engineering and Research Center
Denver, Colorado

U.S. DEPARTMENT OF THE INTERIOR

BUREAU OF RECLAMATION

As the Nation's principal conservation agency, the Department of the Interior has responsibility for most of our nationally owned public lands and natural resources. This includes fostering the wisest use of our land and water resources, protecting our fish and wildlife, preserving the environmental and cultural values of our national parks and historical places, and providing for the enjoyment of life through outdoor recreation. The Department assesses our energy and mineral resources and works to assure that their development is in the best interests of all our people. The Department also has a major responsibility for American Indian Reservation communities and for people who live in Island Territories under U.S. administration.

UNITED STATES GOVERNMENT PRINTING OFFICE
WASHINGTON : 1976

For sale by the Superintendent of Documents, U.S. Government Printing Office, Washington, D.C. 20402, or the Bureau of Reclamation, Attention 922, Engineering and Research Center, P.O. Box 25007, Denver Federal Center, Denver, Colo. 80225.
Price 85 cents. Stock Number 024–003–00101–5

There is a minimum charge of $1.00 for each mail order.

PREFACE

Irrigation systems provide a suitable environment for the growth of aquatic plants, many of which cause problems by interfering with the delivery of water and other operation and maintenance activities. The aquatic vegetation must be controlled so that water can be delivered for irrigation and to meet the municipal, industrial, and recreational demands for which the systems were designed and constructed. The systems will become choked with weeds and become useless unless weed control is practiced.

Copper sulfate has been used for control of algae for many years and, to a limited extent, in more recent years for the control of rooted aquatic weeds. The many factors that must be considered for the successful and practical use of copper sulfate are discussed in this publication. Various sections of the report acquaint the reader with problem aquatic vegetation, the general vegetative types found on irrigation projects, factors that should be considered before starting treatments, efficacy and residues that may be expected from applications, effects of copper sulfate on nontarget organisms, application equipment and techniques, and dosage rates.

ACKNOWLEDGMENTS

The information used in this report was made available through contributions from several sources. Portions were obtained from aquatic weed research studies conducted by the Bureau of Reclamation in cooperation with the Agricultural Research Service, U.S. Department of Agriculture, and the Fish and Wildlife Service, U.S. Department of the Interior, Denver. The author expresses his sincere thanks to V. S. Miyahara for his assistance in conducting laboratory and field studies and to personnel of the Physical Sciences and Chemical Engineering Section, Division of General Research, in Denver for their analyses of the samples. Bureau of Reclamation regional and project personnel made generous contributions by their support in conducting field studies, collecting samples, providing data and photographs, and reviewing the publication. Glenn Berry, Fresno Construction Office, Fresno, Calif., and O. J. Lowry, Southwest Regional Office, Amarillo, Tex., were especially helpful in accumulating information used in the text.

Private water users' organizations such as the Farmers Ditch Co., Loveland, Colo.; Ainsworth Irrigation District, Ainsworth, Nebr.; Goshen Irrigation District, Torrington, Wyo.; Lewiston Orchards Irrigation District, Lewiston, Idaho; and Black Canyon Irrigation District, Notus, Idaho, were most cooperative in carrying out field experiments and providing data and information on field applications and equipment. Donald Reeder, Manager, Lewiston Orchards Irrigation District, generously provided for our use a prototype of the waterpowered feeder he developed, shown on figure 9.

The review and comments of Dr. Peter A. Frank, Agricultural Research Service, U.S. Department of Agriculture, Davis, Calif., on the technical matters of the manuscript are greatly appreciated.

All work was performed under the supervision of L. O. Timblin, Jr., Chief, Applied Sciences Branch and the general direction of H. J. Cohan, Chief, Division of General Research, Engineering and Research Center, Bureau of Reclamation, Denver, Colo.

CONTENTS

	Page
PREFACE	iii
ACKNOWLEDGMENTS	v
INTRODUCTION	1
Aquatic weed problem	1
Copper sulfate as an aquatic herbicide	1
APPLICATION TECHNIQUES AND EQUIPMENT	4
Slug application	4
Continuous application	4
Rate of application	6
FACTORS TO CONSIDER IN COPPER SULFATE USE	7
Problem vegetation	7
Copper sulfate pentahydrate specifications	7
Canal characteristics	7
Water quality	8
Dissolution rate of copper sulfate	8
Registration of copper sulfate	10
FIELD EXPERIMENTS	11
Efficacy of copper sulfate for pondweed control	11
Residues of copper	12
EFFECTS OF COPPER SULFATE ON NONTARGET ORGANISMS	18
Fish and other aquatic life	18
Livestock and wildlife	19
Humans	19
Crop plants	19
COPPER PLUS OTHER HERBICIDES AND FORMULATIONS	21
Copper as an antifouling agent	21
Chelated copper compounds	21
CSP plus citric acid	21
CSP plus diquat	22
CSP plus aliquat	22
REFERENCES	23

TABLES

	Page
1. Copper sulfate dosage rates	6
2. Specifications for copper sulfate particle size to use with auger-type feeder	7
3. Water alkalinity and copper sulfate effectiveness	8
4. Dissolution time of copper sulfate in flowing water	9
5. Copper sulfate dispensed and resulting concentration of copper ions	11
6. Copper residues in aquatic weeds	12
7. Total copper residues in bottom soils of Farmers Ditch	14
8. Total copper residues in agricultural soils irrigated with copper-sulfate treated water	14

FIGURES

	Page
1. Aquatic weeds common in irrigation systems	2
2. Methods used to dump CSP crystals into a canal	4
3. Electric powered auger-type feeder	5
4. Waterpowered auger-type dispenser	5
5. A shop constructed CSP dispensing device	6
6. Dispensing copper sulfate into Farmers Ditch	11
7. Average copper levels found in water from continuous application	13
8. Concentration of copper in water samples	14
9. Waterpowered copper sulfate dispenser	16, 17

INTRODUCTION

The pentahydrate form of copper sulfate (CSP), has been used for many years for control of algae. Recently it has been used to a limited extent for control of rooted aquatic weeds. Since 1904, CSP has been the most widely used algaecide in the United States.

Much additional information has been accumulated through research, field experiments, and field applications over the years. This report was prepared to consolidate pertinent data on CSP to describe effective and safe use of this material for aquatic weed control on irrigation projects.

Several factors are described that must be considered in achieving effectiveness with CSP as a control agent. Environmental considerations are also discussed. Data included in the report were gathered from diverse sources, such as the cooperative program at Denver, cooperative programs with Bureau regional and irrigation district personnel, and information supplied by the Bureau's regional offices and State agencies.

Aquatic Weed Problem.—Submersed aquatic weeds, both algae and rooted types, are common to irrigation canals, drains, and storage reservoirs. These aquatic growths are particularly troublesome to the operation of irrigation projects and cause a multitude of problems, such as impeding waterflow; clogging screens, siphon tubes, and other structures; causing taste and odor problems; increasing the biochemical oxygen demand (BOD) because of organic loading; and harboring disease-carrying organisms. Control measures must be applied to these growths so that the systems can carry the design flow.

The most common algae that cause problems on irrigation systems are the filamentous green types. Some of the genera include *Cladophora* Kutzing, *Ulothrix* Kutzing, *Oedogonium* Link, and *Stigeoclonium* Kutzing. These algae grow attached to concrete canal linings and produce long filaments that extend into the water. In unlined canals filamentous green algae will grow as free floaters and lodge in rooted aquatics and canal structures. Good control of this type of algae is normally achieved with CSP treatments.

The mat-producing filamentous blue-green algae are another group that attach to concrete-lined irrigation canals. These algae, including the commonly found genera of *Oscillatoria* Vaucher and *Phormidium* Kutzing, are usually found growing in association with diatoms. Once established, these gelatinous algal mats are resistant to CSP. Fortunately these algae are not as prevalent nor do they restrict waterflow as much as the filamentous green algae.

Several small, free floating or planktonic algae occur in reservoirs and low velocity distribution systems. A prolific algal growth in these waters is referred to as an algal "bloom." Most of these growths are readily controlled by CSP treatments.

There are many species of rooted aquatic plants found on irrigation projects. The group referred to as pondweeds (*Potamogeton* spp) is the most prevalent; sago pondweed (*Potamogeton pectinatus* L.) is one of the most common aquatic weeds found in irrigation distribution systems.

Photographs of aquatic weeds growing in irrigation systems in figure 1 illustrate the types commonly encountered on irrigation projects.

A Bureau of Reclamation guide [1]* having colored illustrations of aquatics common to irrigation projects of the Western United States is suggested for identification of a particular aquatic pest. Other publications listed in the bibliography will aid in plant identification. Determining whether the aquatic weed is an alga or a rooted aquatic is most important because of the difference in the amount of CSP required to control the two types.

Copper Sulfate as an Aquatic Herbicide.—CSP is probably the most widely used algaecide in all types of water resource developments, and is extensively used for algae control on irrigation projects. CSP has been used for algae control in municipal waters of the United States since 1904, when it was first recommended by the U.S. Department of Agriculture [2, 3]. It has been used for algae control on irrigation projects in the 17 Western States for many years.

*Numbers in brackets refer to references listed at the end of the report.

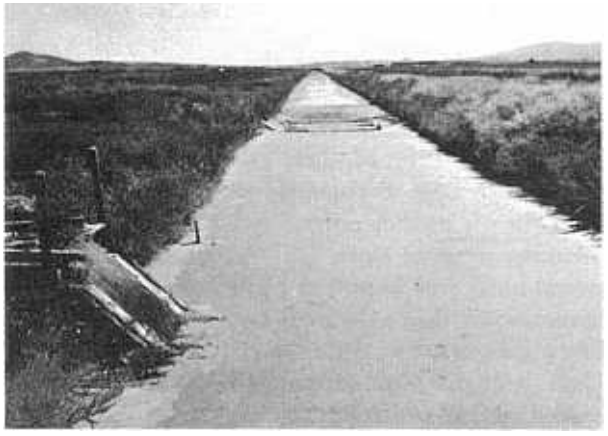

Green algae in a drain of Klamath Project.

Blue-green algae mat on Pole Hill Canal, Colorado-Big Thompson Project.

Filamentous green algae in a drain in Montana.

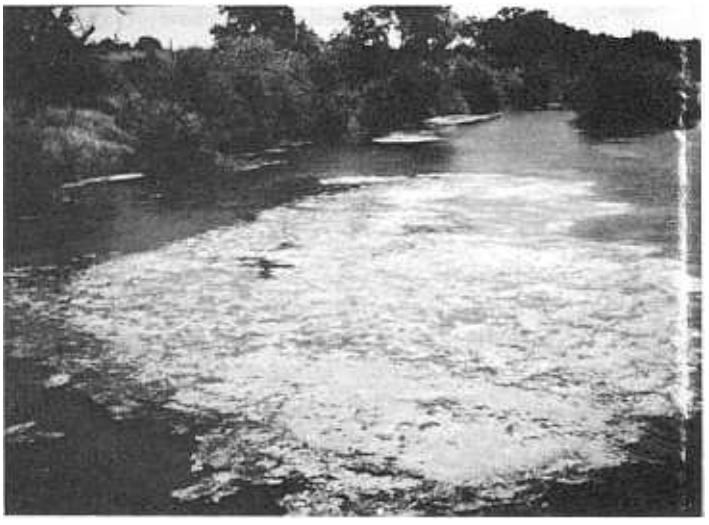

Floating filamentous green algae on Solano Reservoir, California.

FIGURE 1.—Aquatic weeds common to irrigation projects of the Western United States.

Pondweed growing in East Bench Canal in Montana.

In 1962, algae control demonstrations using the bag technique of CSP application were made on canals in Nebraska and Kansas [4]. In 1967, Nielsen described a CSP method of controlling algae in irrigation canals of the Central Valley project, Calif. [5].

A technique of using a very low continuous feed rate of CSP to control algae on irrigation canals was described in a progress report [6].

Although CSP has been used for algae control for many years, its use for control of submersed aquatic weeds has been limited. Some investigators [7, 8] found copper to be toxic to submersed aquatics and have reported varying degrees of success in using different application techniques and concentrations. The author, through a number of field experiments, found the continuous application technique of applying CSP effective for control of pondweeds and algae in irrigation canals. Details of some of these studies are included in papers and progress reports [9, 10].

Closeup of pondweed in East Bench Canal.

APPLICATION TECHNIQUES AND EQUIPMENT

Dumping CSP crystals from a sack.

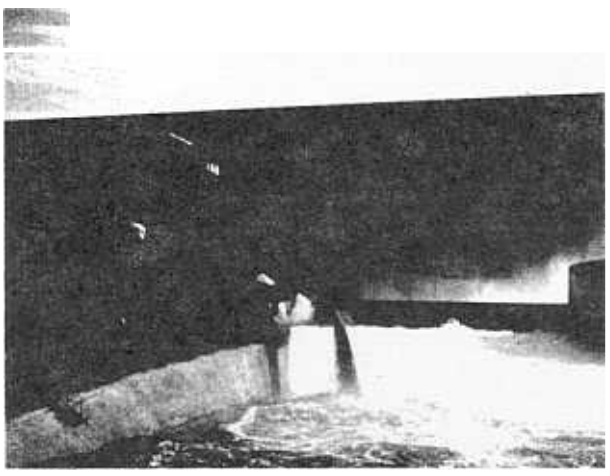

Dumping CSP crystals from a dump truck.

FIGURE 2.--Two methods used to dump CSP crystals into the Friant-Kern Canal, Central Valley Project, California.

CSP is applied by two techniques: slug and continuous. The slug application involves a minimum of time and equipment, while the continuous method requires long-term operation of dispensing equipment.

Slug Application.—The "slug" technique involves applying CSP in one of three ways: (1) dumping CSP crystals directly into the water, (2) placing crystals in a bag and suspending it in the flowing water to dissolve them, or (3) pumping a concentrated aqueous solution of CSP into the canal or lateral for a short period of time. In flowing water this results in a treated slug or segment of moving water. The slug application is most frequently made by dumping CSP crystals from containers or a dump truck directly into the flowing water, as illustrated in figure 2.

Cloth sacks, preferably nylon, loaded with large CSP crystals and partially submerged in the flowing water are sometimes used to apply a slug of CSP. This technique provides a longer dissolution period than the dump method.

While the slug technique requires a minimum of equipment for application, the technique may elevate the copper level more than required and there is little control of the rate of dissolution.

Continuous Application.—This type of application involves a continuously or intermittently regulated dispensing of CSP crystals. An auger-type volumetric feeder provides a uniform dispensing rate. The feeders are equipped with timers to control the time of application and changeable gear ratios to provide different rates of dispensing. Through knowledge of the volume of waterflow and the amount of CSP needed per day to control a particular aquatic plant, the timer on the feeder can be set to dispense the needed quantity of CSP. This type of feeder is also available in a variable feed-rate model, which provides a near-constant level of copper in fluctuating waterflows. The auger-type feeder, shown in figure 3, is commercially available.

Some auger-type feeders that were constructed in the shops of irrigation districts have performed reasonably well. The 115-volt electric power required to drive the commercial product is not always readily available along irrigation canals. Donald Reeder, Manager,

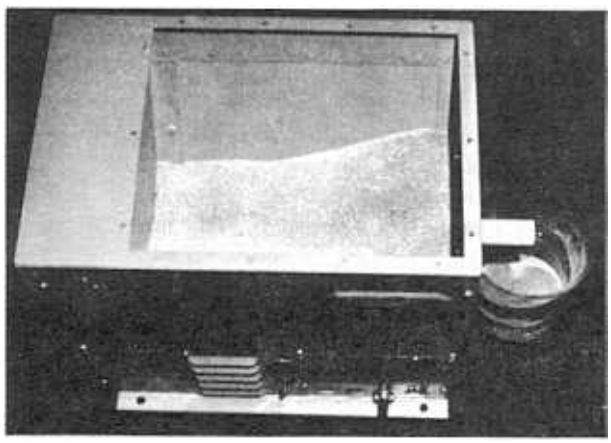

FIGURE 3.—The auger-type feeder found effective for dispensing a uniform rate of CSP crystals.

Dispenser in use on the Lewiston Orchards Irrigation District.

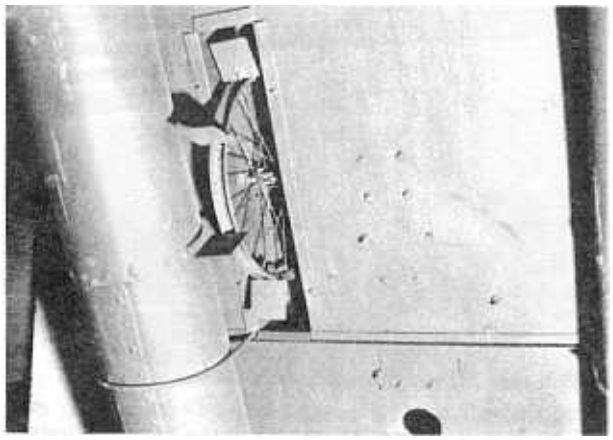

Underside of dispenser showing paddles attached to bicycle wheel.

FIGURE 4.—A waterpowered copper sulfate dispenser.

Lewiston Orchards Irrigation District, Lewiston, Idaho, designed and constructed a waterpowered CSP feeder. The feeder is mounted on a platform supported by pontoons and secured to the bank, figure 4. A drawing of this type feeder (fig. 9) includes some suggestions for achieving greater variability in dispensing rates.

Other techniques of applying a continuous and somewhat controlled rate of CSP have been devised. O. J. Lowry, of the Bureau's Southwest Region, Amarillo, Tex., designed and placed in operation a floating CSP dispenser for controlling aquatic growths in a regulating reservoir on the Arbuckle project, Okla. This feeder consists of a 30-gallon (113.6 liter) plastic container having two small holes, one located in the bottom and the other in the side near the bottom. The container is positioned on a raft so that the bottom portion of the container is submerged in the water when loaded with CSP crystals. This device allows the CSP to dissolve slowly and to move freely from the container. By locating the dispenser near the small reservoir inlet, the CSP solution is carried throughout the reservoir. Figure 5 is a photograph of this dispensing system.

Personnel of the Tracy Field Division of the Bureau of Reclamation have devised a floating box containing holes which allow water to move into and out of the box for dissolving the CSP crystals. This application technique is used to dispense CSP for algae control on the Contra Costa Canal, Central Valley project, Calif. This method increases the dissolution time over that of the slug application and provides a more uniform dissolution rate of CSP. In this case the copper level is

TABLE 1.—Dosage rates of CSP required to control aquatic weeds by different application techniques where the alkalinity of the water is less than 150 p/m as $CaCO_3$.

Aquatic site	Aquatic weed	Application technique	Treatment frequency	Dosage rates of CSP	Approximate range of maximum copper concentration, p/m
Flowing water canals, laterals, and drains	Algae	Slug	approx. 14 days	¼ to 2 lb/ft³/s/treatment	0.5 to 15*
	Algae	Continuous	Daily	0.1 to 0.2 lb/ft³/s/day	0.005 to 0.01
	Pondweed	Continuous	Daily	1.6 to 2.4 lb/ft³/s/day	0.07 to 0.11
Static water	Algae	Slug	As needed	1 to 4 lb/acre-ft	0.1 to 0.4
Reservoirs	Algae	Continuous	Daily	0.05 to 0.20 lb/ acre-ft/day	0.005 to 0.02
Reservoirs	Pondweed	Continuous	Daily	0.5 to 1.0 lb/acre-ft/day	0.05 to 0.10

*These concentrations cover a wide range due to a variable dissclution rate depending upon size of CSP crystal, velocity and temperature of water, method and time of application, and amount of CSP added.

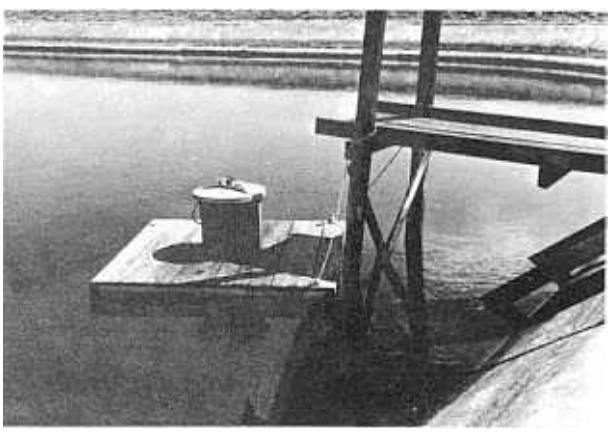

FIGURE 5.—A shop constructed CSP dispensing device used on a regulating reservoir of the Arbuckle Project.

maintained at about 1 p/m (parts per million*) for the 4 hours required to dissolve the CSP used.

The controlled dispensing devices previously described have an advantage over the slug application in that the concentrations of copper in the water can be controlled to varying degrees and the amount can be kept to the minimum required to provide control. Also, the very low controlled levels of copper achieved by this technique reduce the impact of undesirable effects that may occur. The commercially available feeders and other equipment needed for this type of dispensing are more costly than for the slug method.

Rate of Application.—The dosage rate of CSP required to control aquatic weeds will vary because of a number of factors described in the following section. The dosage rate ranges recommended for aquatic weed types by different methods of application are given in table 1.

*p/m is equivalent to milligrams per liter (mg/*l*)

FACTORS TO CONSIDER IN COPPER SULFATE USE

There are several factors to consider before making a decision to use CSP for aquatic weed control, the most important of which are discussed below.

Problem Vegetation.—The particular aquatic weed causing the problem should be identified to determine optimum treatment required. Filamentous green algae attached to concrete canal linings or growing in unlined canal systems and reservoirs can be controlled readily with CSP. The filamentous blue-green algae, although not as prevalent as green algae on irrigation projects, are somewhat resistant to CSP treatments. Once these algae have developed into a mat, CSP has limited effectiveness. Therefore, as a preventive measure, it is suggested that low level treatments on a continuous or intermittent daily basis be started before the blue-green algae have developed into heavy mats.

Other aquatic herbicides, such as emulsified xylene and acrolein, are commonly used on irrigation projects to control rooted submersed aquatic weeds after they become established. These herbicides, though generally more economical than CSP, are often considered undesirable in water used for nonirrigation purposes. In most instances, CSP may be used for weed control in domestic water supplies and fisheries. A fishery biologist should be consulted on the proper treatment and safe usage level where fish protection is necessary.

Copper Sulfate Pentahydrate Specifications.—The copper content of a CSP product, the particle size, and uniformity of particle size are important considerations when purchasing CSP. Since copper is the active ingredient in CSP for vegetation control, the percent of metallic copper present should be specified when purchasing copper sulfate. Most CSP products have a 25-percent or slightly higher content of metallic copper. The label on CSP products generally reads as follows:

	Percent
ACTIVE INGREDIENT:	
Copper Sulfate Pentahydrate	99
INERT INGREDIENT:	1
Copper expressed as metallic . .	25.0 or 25.2

When the CSP will be bag or dump applied, it is generally considered more appropriate to use a large particle size product to extend the dissolution time and to maintain the copper content of the water at a lower level. The large CSP crystals having a minimum particle size of three-fourths of an inch are recommended for this type application. Some CSP products are manufactured in the form of a nugget or briquette about the shape and size of an almond. This form would also be desirable for slug application. Smaller size crystals may be used where they are found to give better results and the higher level of copper does not exceed the tolerance set in the registration.

When using the auger-type feeder to dispense CSP crystals directly into the water, a uniform, small crystal size that will flow readily and dissolve quickly is needed. If the CSP product contains a significant quantity of dust size particles, it may bridge over in the feeder hopper, causing an interruption in the dispensing. CSP products are available that consist of a uniform, small particle size with a very low percentage of fines meeting both the feeder and the rapid dissolution requirements. There are suitable CSP products commercially available. A suggested particle size product that meets these requirements is presented in table 2.

Canal Characteristics.—The velocity of the canal water will affect the distance of effectiveness of a CSP application. The distance of effectiveness increases with the velocity of the waterflow due to the reduced time available for sorption of copper to the canal perimeter. The type of canal lining also affects the distance of effectiveness. Greater distance of effectiveness is achieved in a concrete-lined canal than in an earthen canal because of the greater velocity and less removal due to fewer sorption sites for the copper. The

TABLE 2.—Particle size specifications for a CSP product to use with auger-type feeder.

Sieve No.	Percent CSP passing
10	Not less than 99
60	Not more than 2
100	Not more than 1

length of the canal should be considered in selecting the application method and dosage rate.

Quite often, the amount of aquatic plant growth in a canal is related to the area of the wetted perimeter. However, in a trapezoidal shaped canal, the wetted perimeter does not increase proportionally with the flow. Hence, the aquatic weed growth does not increase directly with flow; therefore, there is some decrease in sorption sites for the copper as the flow is increased. This indicates that the amount of CSP applied per cubic foot per second of flow can usually be reduced slightly when treating larger flows with the same velocity. The specific amount for each situation will have to be determined experimentally.

Water Quality.—Alkalinity, suspended matter, and water temperature are the three major water quality parameters that affect the performance of CSP. Alkalinity of the water is the principal factor that reduces the effectiveness of CSP. Copper ions react with bicarbonate and carbonate ions and the water to form insoluble complexes that precipitate from solution and reduce the amount of biologically active copper. Once the copper is removed from the ionized form, it is no longer effective for aquatic weed control. The waters of western irrigation projects are generally alkaline, although the range in concentration may vary and differs geographically. See table 3 for guidance on water alkalinity and CSP use.

Good results are usually achieved in waters of the lower alkalinity range if other important factors are considered in formulating control procedures. As water becomes more alkaline, the loss in weed control effectiveness can be compensated for by the addition of larger quantities of CSP. The amount of increased dosage required can best be determined through experience gained by considering the alkalinity level, plant species, and the other factors influencing specific situations. In waters of greater than 150 p/m alkalinity, CSP would not normally be recommended, particularly where large volumes of water and many miles of canals are involved. If other control methods are not suitable for the situation and low volumes and short distances are involved, CSP may still be considered but its limitation in high alkaline waters should be recognized.

TABLE 3.—General guidelines to consider in the use of CSP in varying ranges of water alkalinity.

Alkalinity as p/m, $CaCO_3$	Effectiveness of CSP as an aquatic weed control agent
0 to 50	Fully effective
50 to 150	Effective but requires the addition of extra CSP as alkalinity increases
Above 150	Low order of effectiveness

Suspended sediment and other particulate matter afford sites for the sorption of copper, thereby reducing the amount of biologically active copper in the water. The amount of copper sorbed is related to the amount and type of particulate matter in the water. Organic material, both living and dead, represents the greatest sorptive sink for copper. Suspended sediment load is another factor influencing the loss of copper for uptake by the target plants. Nelson, et al. [11], found that copper was sorbed by suspended sediment during treatment of the Roza Main Canal with CSP.

Water temperature is a factor in the phytotoxicity of copper, particularly in canals operated throughout the year. When the water temperature declines to the lower 50° F (10° C) range, algae do not respond to CSP treatments as they do at higher water temperatures. Generally higher CSP rates are needed in waters below 50° F (10° C). The amount of CSP increase required can best be determined through results obtained from gradual increases in dosage rate.

Dissolution Rate (DR) of Copper Sulfate.—Method of application, particle size, and water temperature and velocity affect the rate at which CSP dissolves when submerged in flowing water. In laboratory tests, a small flume was used to measure the time required to dissolve large and small particle size CSP applied to flowing water of varying temperatures and velocities by the bag and dump techniques. A quantity of CSP equivalent to a dosage rate of 1 $lb/ft^3/s$ (16 g/liter/s) was used in each of the tests. The size

of the small CSP crystals averaged a little less than a grain of wheat and were uniform in size. The large CSP crystals contained an assortment of particle sizes ranging from some fines up to 1 inch (2.54 cm) in diameter. However, the majority of the crystals were in the ¼- to ½-inch-diameter (0.64 to 1.27 cm) size.

The dump technique of application involved dumping a weighed quantity of CSP directly into the flowing water. The residual crystals in the test flume then slowly dissolved in the flowing water. The bag technique consisted of submerging the weighed quantity of crystals in a cheesecloth bag. The bag was suspended in the flowing water so that the water could move freely through the bag and around the CSP crystals. Denver tap water was used in the experiment.

Results show that the bagged small CSP crystals dissolved quickly—2 to 14 minutes—and the maximum levels of copper found in the water ranged from 20 to 54 p/m. This rate is 3 to 6 times greater than the bagged large crystals that required 12 to 48 minutes for dissolution, depending upon water temperature and velocity. The maximum copper levels ranged from 3.3 to 9.0 p/m for the large size crystals.

The time required to dissolve dumped small crystals ranged from 11 to 34 minutes and the maximum copper levels ranged from 3 to 11.9 p/m. The dumped large crystals required 15 to 41 minutes to dissolve and the maximum levels of copper ranged from 3.2 to 9.4 p/m. Unlike the wide differences in dissolution rate (DR) associated with the bag technique, the DR for the dumped small crystals was only slightly greater than that for the large crystals.

Results given in table 4 show that the DR for CSP increases with water temperature and velocity. The DR in 70° F (21° C) water is 1.5 to 2 times greater than that at 55° F (12.8° C) at the same velocities. The 55° F water provides only a slight increase in DR over that of 46° F (7.8° C) water.

The DR of CSP at a 1.68 ft/s (51.2 cm/s) velocity is 1.3 to 3.3 times greater than the rate at 0.84 ft/s (25.6 cm/s) velocity at the same temperature, and the 0.84 ft/s velocity provides a DR 1.5 to 2 times greater than the rate for the 0.42 ft/s (12.8 cm/s) velocity.

The results suggest using small, uniform size crystals to obtain quick dissolution when an auger-type feeder is used to dispense a continuous application of CSP. In applying CSP by the slug technique where no use of the treated water is made other than for irrigation, the

TABLE 4.—Dissolution time of CSP and copper levels determined under different crystal size CSP, application techniques, and water temperatures and velocities.

Time in minutes required for complete dissolution and maximum concentration (p/m) of copper found

CSP crystal size	Application technique	1.68 ft/s vel						0.84 ft/s vel						0.42 ft/s vel					
		70°F		55°F		46°F		70°F		55°F		46°F		70°F		55°F		46°F	
		Time, minutes and seconds	Concentration, p/m	Time, minutes and seconds	Concentration, p/m	Time, minutes and seconds	Concentration, p/m	Time, minutes and seconds	Concentration, p/m	Time, minutes and seconds	Concentration, p/m	Time, minutes and seconds	Concentration, p/m	Time, minutes and seconds	Concentration, p/m	Time, minutes and seconds	Concentration, p/m	Time, minutes and seconds	Concentration, p/m
		m s		m s		m s		m s		m s		m s		m s		m s		m s	
Small	Bagged	2 0	81.0	4 10	53.5	4 35	41.0	3 10	54.0	6 0	36.2	6 10	34.0	7 12	23.6	13 0	20.1	14 15	22.0
Large	Bagged	12 0	8.9	24 0	7.0	27 0	6.4	21 0	11.1	25 0	9.0	33 0	8.3	25 0	5.4	30 0	5.0	48 0	3.3
Small	Dumped	—*	—	—	—	—	—	11 25	12.4	13 0	11.9	14 20	6.1	18 35	4.6	27 0	3.5	34 0	3.1
Large	Dumped	—	—	—	—	—	—	15 0	9.4	20 0	7.2	28 0	4.1	23 0	5.0	30 0	3.4	41 0	3.2

*This velocity washed the crystals out of the test flume.

large size crystals are recommended. The larger the crystal size the longer the dissolution period.

Registration of Copper Sulfate.—The Environmental Protection Agency (EPA), in response to petitions for the registration of CSP for algae and pondweed control in various aquatic situations, including irrigation distribution systems, set a tolerance (the upper permissible limit) of 1 p/m copper in potable water [12]. Copper was exempted by EPA [13] from the requirement of a tolerance in eggs, fish, meat, milk, irrigated crops, and shellfish when it resulted from the use of CSP as an algaecide or herbicide in irrigation conveyance systems, lakes, ponds, reservoirs, or bodies of water in which fish or shellfish are cultivated.

CSP products are now labeled through the EPA for use in controlling algae and pondweeds by slug and continuous application methods on irrigation projects and for use in other aquatic situations. To comply with current Federal requirements, CSP products properly labeled for the intended use must be selected.

FIELD EXPERIMENTS

Efficacy of Copper Sulfate for Pondweed Control.—A 3-year study (1966–1968) was performed on the Farmers Ditch located near Loveland, Colo., to determine the effectiveness of daily low level dispensing of CSP for controlling pondweeds in an irrigation canal and, by analyzing the samples collected, to learn the fate of the copper applied. The earthen canal was about 10 miles (16.1 km) long and carried an average flow of 22 to 24 ft^3/s (0.62 to 0.68 m^3/s). The canal was operated from late May to early October, and the water was used to irrigate sugar beets, corn, beans, and alfalfa. The canal had a history of heavy infestations of sago and leafy pondweed (*Potamogeton pectinatus* L. & *P. foliosus* Raf.) and scattered stands of waterweed (*Elodea canadensis* Michx.).

An auger-type feeder was located along the side of the canal so that the CSP crystals could be dispensed into the flowing water as it passed through a concrete flume located about one-eighth of a mile below the site of the water diversion from the Colorado-Big Thompson River, figure 6. CSP was dispensed into the irrigation water on a daily basis ranging from 3½ to 24 hours per day throughout the three irrigation seasons. Application was started shortly after the water was turned into the ditch and continued for most of the season. The highest dosage rate was applied early in the season; the rate was decreased after the initial flush of growth was under control. The dosage rate and the daily period of dispensing were varied to determine what effect, if any, this would have on the weeds. The amount of CSP dispensed per season is given in table 5.

FIGURE 6.—Auger-type feeder in shelter house used to dispense daily, low dosage rates of CSP into Farmers Ditch.

TABLE 5.—The average quantity of CSP dispensed per ft^3/s per day into an average flow of water for the year and the average theoretical concentration of copper ion.

Year	Average ft^3/s of flow	Average pounds of CSP dispensed/$ft^3/s/d$	Theoretical average copper ion concentration, p/m
1966	22.5	3.6	0.17
1967	23.0	2.4	0.11
1968	24.2	2.1	0.11

During the early part of the first season, the pondweed mass reached problem proportions due in part to the interruptions in the daily dispensing schedule caused by CSP material that did not dispense properly because it contained too many fines. Weed growth was impeding waterflow in one section so as to require xylene treatment. Subsequently, the dispensing problem was corrected, and in 6 weeks the pondweeds started to die in the upper reaches of the canal. This was followed by a gradual decline of weed growth throughout the 9 miles of the canal and excellent control persisted during the remainder of the irrigation season. During the last 2 years, the heavier dosage rate was applied in the early part of the season and the rate was decreased as the season progressed. The dosage rate schedule provided excellent control of the pondweeds and water was delivered to the farmers in adequate quantities and at scheduled times. Also, the filamentous algae that had continually plugged the tubes used to siphon water from the head ditch into the irrigation furrows was eliminated, which was extremely beneficial to the farmers.

With the excellent pondweed control achieved by this technique, only minimal quantities of pondweed seeds, tubers, and other propagative material were produced for starting growth the following season. This indicated that the quantity of CSP needed may be decreased from year to year.

Following the conclusion of the 3-year experiment in 1968, the Farmers Ditch Company expressed the desire to continue the CSP treatment as a part of its weed control operations. By following the author's suggested dosage rate schedule, a successful aquatic weed control program has been achieved. In 1973, good aquatic weed control was maintained with a dosage rate of 0.91 lb/ft^3/s per day (0.41 kg/28.317 liter/s per day). These results indicate that the CSP dosage rate can be reduced significantly from the recommended starting average rate of about 2 lbs/ft^3/s per day (32 g/liter/s per day).

The alkalinity of the irrigation water varied depending on the season and the source of the water in the Big Thompson River. Bicarbonate alkalinity ranged from 52 to 98 p/m over the 3-year period. The biological activity of the copper apparently was not adversely affected by this level of alkalinity.

Residues of Copper.—The fate of the copper applied was determined by periodically collecting samples of water, aquatic weeds when available, and aquatic soils at several stations along the canal [14]. At the beginning and end of each irrigation season, agricultural soils were also collected from three fields irrigated with CSP-treated water.

The general pattern of the copper level in the irrigation water as it moved downstream is illustrated in figure 7. The level of ionic copper in the water was reduced by sorption and sedimentation as it moved away from the application site.

Samples of aquatic vegetation were analyzed for total copper content. Some of the samples represented plants found growing in seepage water in the upper reaches of the canal before the irrigation season started. Table 6 shows the levels of copper found.

These data show that the aquatic weeds absorb copper readily from the water even under low copper concentrations. The leafy pondweed sample collected on July 7, 1966, contained the highest level of copper and showed definite symptoms of copper toxicity, including necrosis of the leaf tips and a different coloration and vigor as compared to untreated plant material. The leafy pondweed died soon after the sampling and was sloughed from the area. The samples of aquatic weeds collected before the start of the 1967 and 1968 seasons contained an elevated level of copper attributable to residual copper in the ditch bottom remaining from previous CSP treatments. The plants in the downstream portion of the canal absorbed much less copper, probably due to exposure to lower concentrations. Also, the weeds in the lower end of the canal were usually growing on silt bars and out of the main current of the waterflow.

Copper was accumulated by the aquatic weeds from the surrounding water by factors of 233 to over 2,800. This computation was based on an average level of 0.15 p/m of copper in the water and the wet weight of the aquatic vegetation that is 10 times greater than the dry weight.

Table 7 gives the copper levels found in bottom soils

TABLE 6.—Quantities of copper found in aquatic vegetation harvested from the Farmers Ditch during the CSP experiment.

Date	Miles from application site	Aquatic weed	Average p/m of copper (ovendried basis)
1966–1968	Untreated	Leafy pondweed	17.9
	Untreated	Elodea	21.5
5– 7–68	0.25	Leafy and horned pondweed*	51.0
7– 7–66	0.30	Leafy pondweed	4,280.0
6–15–67	0.30	Leafy pondweed	470.0
8– 1–67	0.30	Leafy and horned pondweed	1,610.0
5–17–67	0.30	Horned pondweed*	40.5
5– 7–68	0.30	Leafy and horned pondweed*	92.5
5– 7–68	1.1	Elodea*	56.0
7– 7–66	3.8	Sago pondweed	1,480.0
8–23–66	3.8	Sago pondweed	2,542.0
9–29–66	3.8	Sago pondweed	1,290.0
8– 1–67	4.4	Sago pondweed	350.0
8–26–68	7.0	Sago pondweed	360.0
7– 7–69	9.0	Sago pondweed	386.7

*These samples were collected before the start of the annual CSP treatment.

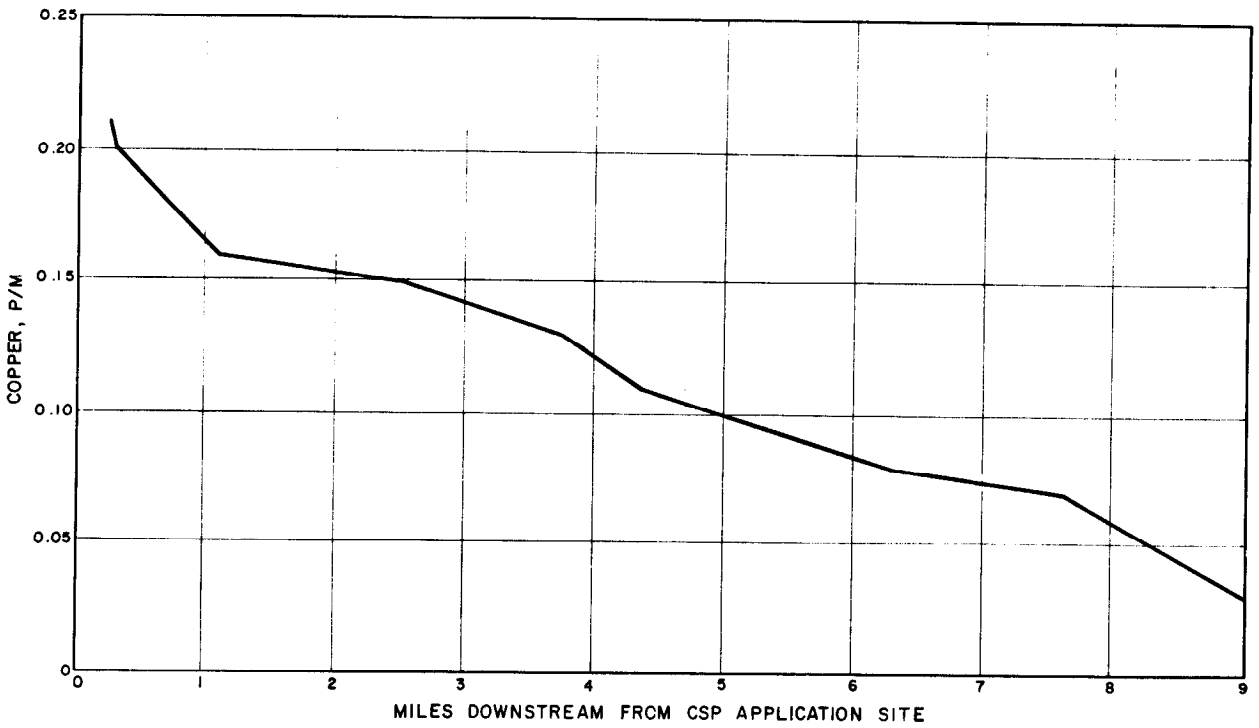

FIGURE 7.—Average copper levels found in irrigation water at mile points downstream obtained from a 3-year sampling program where CSP was applied continuously to the irrigation water.

collected from the untreated reach and at 0.25, 0.3, 1.1, 3.8, 6.3, and 9.0 miles below the treatment site in Farmers Ditch at the beginning and end of the 1967 and 1968 CSP treatments. The total copper content of the untreated soil samples ranged from 18 to 24 p/m with an average of 21.5 p/m. Soils from the six stations exposed to CSP-treated water contained from two to five times more copper than that of the control samples. The highest levels occurred in the soils located 0.3 and 1.1 miles (0.5 and 1.8 km) below the CSP application site. Higher copper levels were usually found at stations where the velocity was lower and a greater sedimentation of particulate matter occurred.

Copper is removed from solution by sorption to the soil particles, absorption by plants that subsequently slough to the bottom, adsorption to particulate matter that settles to the bottom, and the sedimentation of copper carbonate and other compounds formed in the chemical reaction between copper and bicarbonate and carbonate ions.

The amount of copper remaining in the ditch bottom was estimated at approximately 60 percent of the copper applied. The remaining 40 percent is in the irrigation water as it leaves the canal and is transported through the head ditch onto the cropland. Cropland soils irrigated with the treated water were sampled at three stations before and after each of the three irrigation seasons. The residues of total copper found in these soils are presented in table 8. Before the CSP treatments were started in 1966, the level of total copper in the soils at the three stations ranged from 19 to 25 p/m, while the copper content ranged from

TABLE 7.—Total copper found in the bottom soils of Farmers Ditch which was treated with CSP during the 1966, 1967, and 1968 seasons.

Date sampled	Miles from CSP application site	P/M copper (air-dried basis)		
		Average of two composites	Average for the site	Less background copper
5-17-67	Just upstream (untreated)	24	21.5	0
5- 7-68		22.5		
9-28-67		21.5		
10-29-68		18		
5-17-67	0.25	40	54	32.5
5- 7-68		82		
9-28-67		43.5		
10-29-68		50.5		
5-17-67	0.30	116.5	100.4	78.9
5- 7-68		65		
9-28-67		123.5		
10-29-68		96.5		
5-17-67	1.1	52	102.5	81
5- 7-68		56		
9-28-67		209		
10-29-68		93		
5-17-67	3.8	42.5	54.3	32.8
5- 7-68		49.5		
9-28-67		59.0		
10-29-68		66		
5-17-67	6.3	25	37.5	16
5- 7-68		39		
9-28-67		34		
10-29-68		52		
5-17-67	9.0	66	67.1	45.6
5- 7-68		60		
9-28-67		38.5		
10-29-68		104		

TABLE 8.—Total copper found in agricultural soils irrigated with CSP-treated water from Farmers Ditch.

Date sampled	Approximate miles from CSP application site	P/M copper (air-dried basis) average of two composites
5-24-66	4	24.5
9-29-66		24
5-17-67		24
9-28-67		21
5- 7-68		24.5
10-29-68		24
5-24-66	4.5	20.5
9-29-66		19.5
5-17-67		19
9-28-67		19
5- 7-68		21.5
10-29-68		21.5
5-24-66	6.5	21
9-29-66		23
5-17-67		20.5
9-28-67		19.5
5- 7-68		21.5
10-29-68		22

19 to 26 p/m in the soils collected throughout the entire 3-year experiment. These data indicate no copper residue buildup in the agricultural soil.

No detectable increase in copper was expected in the soil, since the amount of copper leaving the canal (approximately 40 percent of the 1,500 pounds (680.4 kg) applied annually) is distributed over 2,400 acres (971.3 ha) or about one-fourth of a pound (0.113 kg) of copper per acre (0.4 ha) per season. Assuming one-fourth of a pound (0.113 kg) was mixed

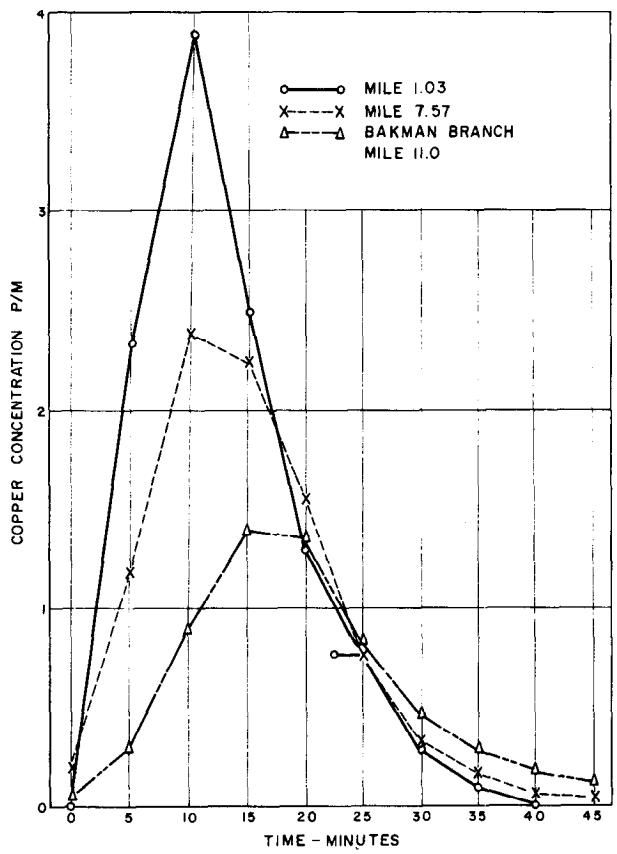

FIGURE 8.—Concentrations of copper in water samples collected following a slug-type treatment of small copper sulfate crystals at about 1 pound per cubic foot per second of waterflow.

uniformly into the top 6 inches (15.24 cm) of soil, it would amount to an addition of about 0.15 p/m copper per year, which is less than 1 percent of the total copper occurring in these soils.

CSP crystals dumped into flowing water of an irrigation canal will have a variable dissolution rate as discussed in the section on "Factors to Consider in Copper Sulfate Use" of this report. However, the level of copper in the water just downstream from the application site will rise very rapidly, reach a peak level in a few minutes, and then decline nearly as quickly. As the water moves away from the application site, the peak level of copper diminishes while the length of the slug of copper-bearing water increases, and the total quantity of copper in the water decreases from sorption and sedimentation. The length of the treated water slug increases due to diffusion and longitudinal mixing into the untreated water caused by hydraulic drag of the water on the canal perimeter.

Figure 8 shows the curves for copper levels found in water collected from the Friant-Kern Canal, Central Valley project, Calif., following a slug application of CSP at a dosage rate of 1 lb/ft^3/s (15.9 g/liter/s). The entire quantity of a CSP was dumped into the water in one application. Periodic CSP treatments of this type have provided excellent algae and pondweed control from applications at two sites along the 150-mile (241.4 km) length of the canal. The water of this canal is of a high quality, having a near-neutral pH and a very low level of alkalinity.

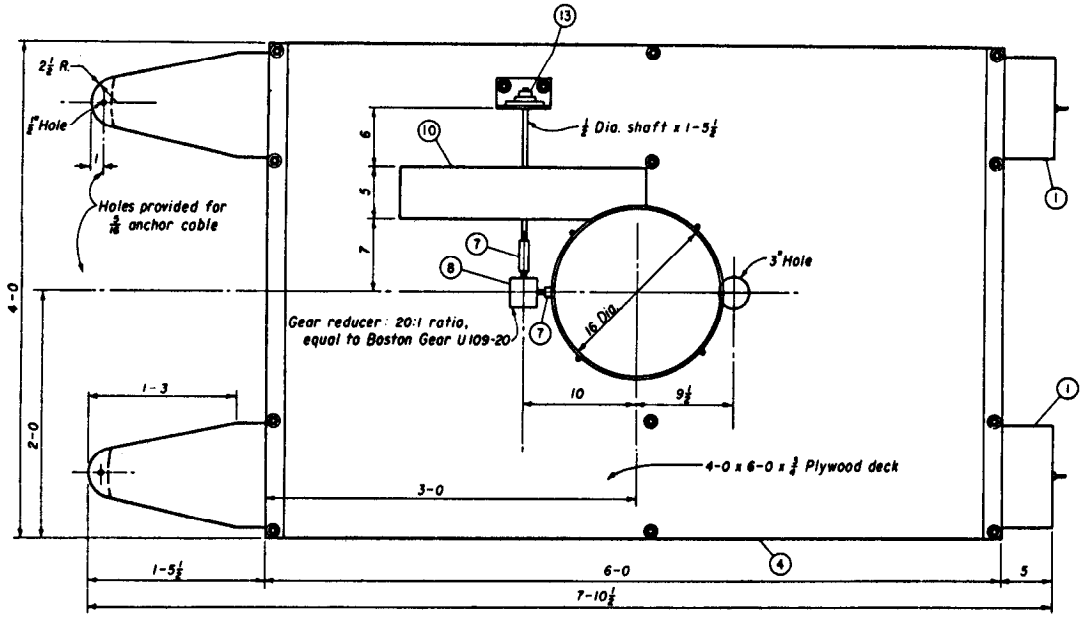
2 1/8 R.
1/8" Hole
1
Holes provided for 3/16 anchor cable
4-0
2-0
1-3
3-0
1-5 1/8
6-0
5
7-10 1/8
13
1/2 Dia. shaft x 1-5 1/8
10
6
5
7
8
7
3" Hole
16 Dia.
Gear reducer: 20:1 ratio, equal to Boston Gear U109-20
10
9 1/2
1
1
4-0 x 6-0 x 3/4 Plywood deck
4

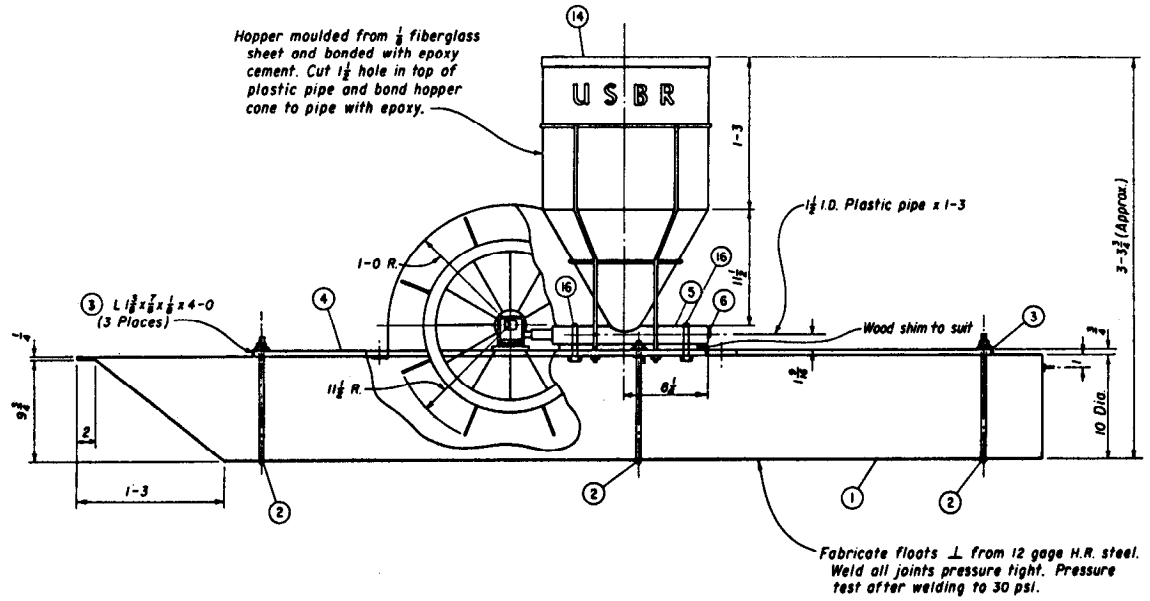
Hopper moulded from 1/8 fiberglass sheet and bonded with epoxy cement. Cut 1 1/2 hole in top of plastic pipe and bond hopper cone to pipe with epoxy.
14
U S B R
1-3
1 1/2 I.D. Plastic pipe x 1-3
3-3 3/4 (Approx.)
1-0 R.
11 1/2
16
16
5
6
3 L 1 3/8 x 7/8 x 1/8 x 4-0 (3 Places)
4
Wood shim to suit
3
1/4
9 3/8
2
1-3
11 1/2 R.
6 1/2
1 1/2
3/4
1
10 Dia.
2
2
1
2
Fabricate floats ⊥ from 12 gage H.R. steel. Weld all joints pressure tight. Pressure test after welding to 30 psi.

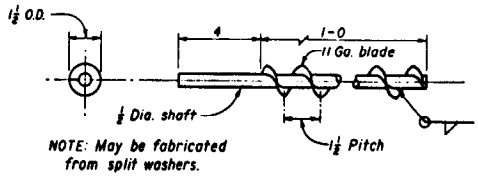

6

SPIRAL CONVEYOR
STAINLESS STEEL
ONE REQUIRED

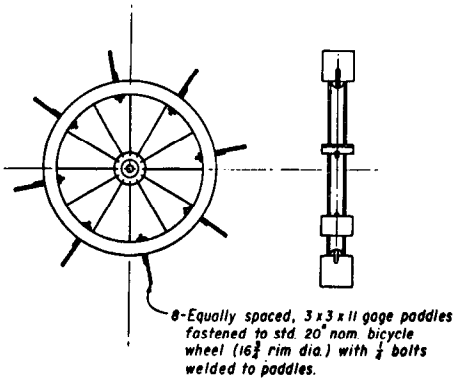

11

PADDLE WHEEL
STEEL
ONE REQUIRED

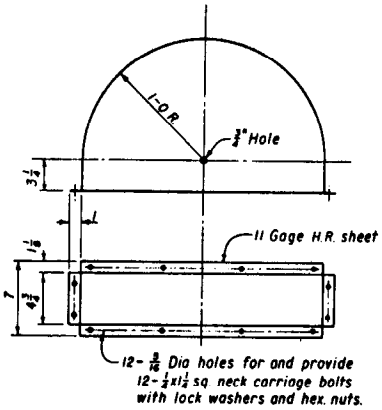

10

PADDLE WHEEL COVER
STEEL
ONE REQUIRED

PART NO.	NO. REQ'D.	DESCRIPTION	MATERIAL
1	2	Float, 10 dia. x 7-10 1/2	Steel
2	4	U-Bolt, 3/8 dia. x 2-4 w/2 hex nuts & 2 std. washers, 1 1/2 thd. each end	Steel
3	3	L 1 3/8 x 7/8 x 1/8 x 4-0	Steel
4	1	Deck 4-0 x 6-0 x 3/4	MARINE OR EXT. FIR/R PLYWOOD
5	1	Plastic pipe 1 1/2 I.D. x 1-3	Plastic
6	1	Spiral conveyor 1 1/2 O.D. x 1-4	Stainless steel
7	2	1/4 x 3 SHAFT COUPLING W/SOCKET HEAD SET SCREWS	Steel
8	1	20:1 GEAR REDUCER, EQUAL TO BOSTON GEAR U-109-20	Steel
9	1	Shaft, 1/2 dia x 1-5 1/2	Steel
10	1	Paddle wheel cover	Steel
11	1	Paddle wheel	Steel
12	1	L 4 x 4 x 1/4 x 0-5 1/2	Steel
13	1	1/2 Flanged cartridge bearing	Steel
14	1	Hopper	Fiberglass
15	1	Hopper support 3/8 dia. rod	Steel
16	2	3/8 Dia U-Bolt x 2 I.D. x 4 leg	Steel

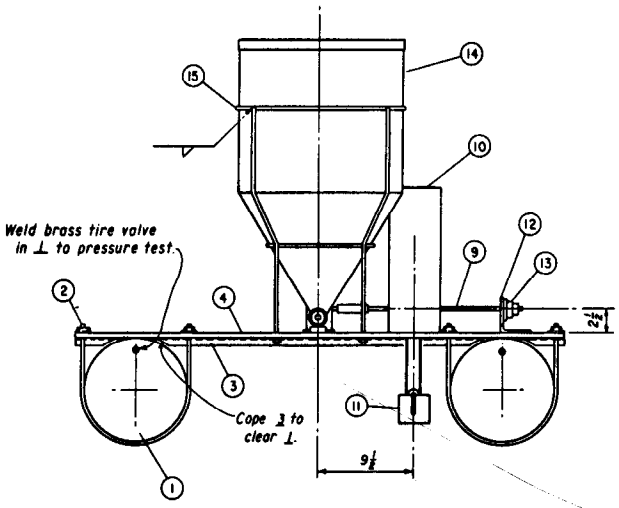

NOTES

To vary dispensing rate, the gear reducer, Part No. 8, may be purchased in ratios of 5:1, 10:1, 15:1, 20:1, 30:1 and 4:1 to meet suggested dispensing rates that will vary with canal capacity. (see text)

Paint note: Paint all exposed parts with VR-3 paint system. Surface preparation for painting shall be as follows:

- ferrous surfaces: sandblast before painting.
- wood surfaces: apply first coat of VR-3 thinned 50 percent with a compatible thinner.
- plastic and fiberglass surfaces: sandblast lightly to remove hard glaze before painting.

ALWAYS THINK SAFETY

UNITED STATES
DEPARTMENT OF THE INTERIOR
BUREAU OF RECLAMATION
DIVISION OF GENERAL RESEARCH

WATER POWERED
COPPER SULFATE DISPENSER

DESIGNED ... SUBMITTED ... W.E. Smith
DRAWN ... RECOMMENDED ...
CHECKED ... K.R. Johnson ... APPROVED ...
CHIEF, MECHANICAL BRANCH

DENVER, COLORADO, APRIL 1, 1973 | D253-167

FIGURE 9.—Waterpowered copper sulfate dispenser.

EFFECTS OF COPPER SULFATE ON NONTARGET ORGANISMS

CSP used cautiously for algae and pondweed control has a minimum adverse effect on nontarget organisms. Trace quantities of ionic copper may be beneficial or even essential for the growth of organisms, but excessive quantities have been found to be toxic to a wide variety of aquatic life, from bacteria to fish. McKee and Wolfe [15] have presented an excellent review of the literature on copper and copper salts and the relationship of ionic copper to water quality criteria.

Fish and Other Aquatic Life.—Fish are perhaps the most commonly observed aquatic life that can be adversely affected by CSP applications. The toxicity of copper to aquatic organisms varies significantly, not only with the species but also with the physical and chemical characteristics of the water, such as temperature, hardness, turbidity, and carbon dioxide content [16, 17].

McKim and Benoit [18] found that the maximum acceptable toxicant concentration (MATC) for brook trout exposed to copper in water with a hardness of 45 mg/*l* as $CaCO_3$ and a pH of 7.5 ranged between 9.5 and 17.4 p/b (parts per billion) of copper using survival, growth, and reproduction as criteria to evaluate effects. Mount and Stephan [19] found that the MATC of copper for the fathead minnow (*Pimephales promelas,* Rafinesque) in water with a hardness of 30 mg/*l* as $CaCO_3$ ranged between 10.6 and 18.4 p/b using survival, growth, and reproduction to evaluate effect. Hazel and Meith [20] found, in bioassays of 25-day-old eyed king salmon eggs and fry exposed continuously to copper solutions adjusted to a pH of 6.8 to 7.2 for a 27-day period, that eggs are more resistant to the toxic effects of copper than are fry. Copper concentrations of 80 p/b did not noticeably affect the hatching success of eyed eggs, but concentrations as great as 40 p/b were acutely toxic to fry, and a concentration of 20 p/b caused increased mortality and inhibited growth. These data indicate that the acceptable level of copper in waters involving a fishery is very low, and each system should be considered on its own relationship. The copper concentrations resulting from the continuous application recommendations for algae control would apparently be safe levels according to the findings of the above three citations.

Observations have been made of fish and other aquatic life in irrigation canals where CSP is used to control algae and/or pondweeds. Continuous application of a very low rate of CSP, 2 to 5 p/b as copper, into the Charles Hansen Feeder Canal of the Colorado-Big Thompson project in Colorado, throughout the year over a period of several years for algae control apparently has not adversely affected the rainbow trout that have escaped into the concrete-lined canal.

The Farmers Ditch near Loveland, Colo., was observed for fish and other aquatic life at the end of each irrigation season. Yellow perch, minnows, carp, and a few trout found in the CSP-treated reaches were in good condition. Other aquatic life such as crayfish, mayfly, and midgefly larvae also appeared to be healthy. These organisms were exposed to the maximum level (0.2 p/m) of copper that will occur during continuous application of CSP for pondweed control.

Lin, Nemo, and Vedder [21], in residue studies with two copper compounds on rainbow trout, found no relationship between the length of exposure or the concentration of copper and the amount of copper residue detected in fish.

Arthur and Leonard [22] found that long-term exposures to very low levels of copper can affect scuds and snails when survival, growth, reproduction, and feeding were the responses used to measure toxicant effects.

In chronic bioassay tests conducted in water having a mean alkalinity of 73 p/m as $CaCO_3$, Goettl, et al., [23] found that the maximum acceptable toxicant concentration of copper for rainbow trout, continuously exposed, ranged from 12 to 19 p/b. They also reported the TL_m values* for the stonefly (*Pteronarcys californica*) and the mayfly (*Ephemerella grandis*) to

*TL_m=Median tolerance limit.—The concentration which produces mortality to 50 percent of the tested population in a given period of time.

be 10.1 to 13.9 p/m and 0.18 p/m of copper, respectively, in acute bioassays conducted for 64 to 264 hours. Their short-term static tests with copper revealed no deleterious effect on the stonefly or mayfly.

Livestock and Wildlife.—Trace quantities of copper are generally considered essential to the good health of these animals. Cunningham [24] found that cattle can tolerate 5 g of copper sulfate per day for at least 18 months without toxic effects; however, doses of 1.5 to 2.0 g daily are fatal within 30 days for British breeds of sheep, and a single dose of 2.5 g is said to be near the toxic level for small ewes. Daily copper doses of 2 to 4 mg have been harmless to rats; but doses of 6 to 9 mg per day have been harmful, and doses amounting to more than 1 mg per kg of body weight for 5 days are injurious to growth [25]. Hale [26] has reported that 1 g daily of soluble copper is safe for dogs, but more can be fatal. It is not likely that animals would drink sufficient quantities of CSP-treated irrigation water to receive harmful dosages of copper, especially where a continuous application is made and the maximum copper level would be in the 0.1 p/m range. For example, an animal would receive a dose of 1 mg of copper by ingesting 10 liters of treated water.

Humans.—Copper is an essential and beneficial element in human metabolism [27]. Small quantities are considered nontoxic, but large doses cause some adverse effects. Copper is not considered a hazard in drinking water because levels high enough to be dangerous to human beings impart a disagreeable taste to water. The recommended limit for copper set by the Drinking Water Standards [28] is 1 mg/*l*.

Crop Plants.—Copper is essential for plant growth [27]. This requirement is very low; high levels may become toxic. The amounts normally used to control aquatic weeds in irrigation canals are not likely to be toxic to crop plants grown in the irrigated fields. An 8-year use of CSP for control of pondweeds on the Farmers Ditch, representing the maximum quantities of copper applied for this type of weed control, has not produced any sign of crop damage. As reported in the section on "Residues of Copper" of this report, the first 3 years of CSP use showed no measurable buildup of copper residues in the crop soil.

COPPER PLUS OTHER HERBICIDES AND FORMULATIONS

In an attempt to control aquatic pests, CSP and other copper compounds have been used in combination with other herbicides, and used to prepare chelated copper compounds. These combinations were formulated to enhance the biological activity of the copper compound, to increase the total activity of the combination over that of either used alone, to overcome the effects of high alkaline water on ionic copper, or to provide a vehicle for slow release of the copper for specific applications.

Copper as an Antifouling Agent.—Appropriate paint systems of cuprous oxide, metallic copper coatings, and high copper content nickel alloy metal sheeting have been effective for inhibiting the attachment and growth of freshwater and marine organisms. These materials are applied to a surface such as a concrete water measuring flume where it is important to prevent growths that interfere with the movement of water across the surface. A slow release of copper from these agents at the water interface provides the inhibitory action. Because of the high cost of application of these agents, their use is generally limited to rather small surface areas. Several antifouling paints containing cuprous oxide as the toxicant were field evaluated for efficacy in inhibiting the attachment of algae to concrete lining and other structures of irrigation systems [29].

Chelated Copper Compounds.—Copper has been combined with several other compounds such as ethylene diaminetetraacetic acid (EDTA), triethanolamine, and organic acids such as citric and gluconic, to form chelates for preventing the chemical reaction of copper with the bicarbonate and carbonate ions of the water. The EDTA copper chelate binds up the copper so tightly as to prevent biological activity.

None of the copper chelates has shown sufficient effectiveness in high alkaline waters to be considered economical for use in irrigation systems. The cost of copper chelates is usually many times that of CSP in terms of equivalent quantities of copper. Based on biological activity, the chelates would not be considered economical as a control measure unless they could produce much greater activity than that of CSP in low-to-medium levels of water alkalinity, or show good effectiveness in high alkaline waters. Other properties of the chelates that may give them an advantage over CSP, such as a reduced impact to the environment, should be considered. The need to fully evaluate the chelates for specific field applications before deciding to use them cannot be overemphasized.

CSP Plus Citric Acid.—Gelfand [30] found that citric acid and other aliphatic hydroxy acids are effective in preventing the precipitation of copper in alkaline waters. An experiment was conducted on a lateral of the Goshen Irrigation District near Torrington, Wyo., to determine whether citric acid plus CSP would increase the distance of effectiveness for sago pondweed control over that of CSP used alone in irrigation water having a mean alkalinity of 180 p/m as $CaCO_3$. During the first season, the CSP was dispensed into the irrigation water continuously at an average rate of about 1.6 lb/ft^3/s per day (25.8 g/liter/s per day). This treatment provided excellent control of the dense stand of sago pondweed for the first 3 miles (4.8 km) of the 7-mile-long (11.3 km) lateral. During the second season, one part citric acid was mixed with two parts CSP and added to the feeder hopper for dispensing continuously as dry crystals at the approximate rates of 0.8 and 1.6 lb/ft^3/s per day (12.7 g/liter/s per day), respectively. The citric acid addition did not significantly increase the distance of pondweed control. It was concluded that citric acid did not enhance the activity of copper on pondweeds under the conditions of this experiment.

Good results were achieved on the Salt River Project, Phoenix, Ariz., by using low-rate daily applications of CSP plus citric acid for control of submersed aquatic weeds in canals on the project. The alkalinity of the water ranged from 175 to 246 p/m, with an average of 199 p/m during the test. Equal parts of citric acid and CSP were dissolved in water and then applied as an aqueous solution. An application rate of 3 lb of CSP per ft^3/s per day (48 g/liter/s per day) for the first 8 weeks of the season gave good kill of the pondweeds, and a rate of 1 lb per ft^3/s per day (15.9 g/liter/s per day) maintained good control for the remaining 8 months of the season. In this case, the

citric acid provided good stability to the aqueous solution of CSP and no doubt enhanced the activity of the copper in this relatively high alkaline water.

The high alkaline-saline waters prevalent in the Southwestern United States will greatly reduce the effectiveness of CSP for control of aquatic vegetation in canals and where CSP is to be used in these waters, combining it with citric acid or a similar agent should be considered.

A laboratory study was conducted using potted cultures of sago pondweed in a static water test to determine the uptake of copper by the plants from water treated with CSP alone and in combination with citric acid. CSP was added to the plant cultures that were 12 to 18 inches high (30.48 to 121.92 cm) on a 4-day-per-week schedule over a 6-week period at rates equivalent to 1 and 5 p/m as copper. Citric acid was also added to certain aquaria at rates of 1 and 5 p/m. At the end of the treatment period, the entire plants were harvested, oven-dried and analyzed for total copper. The plants treated with a combination of 1 p/m copper and citric acid showed a copper uptake of 6.3 percent of the total quantity added to the water, while those plants treated with 1 p/m copper alone, 5 p/m of copper and citric acid, and 5 p/m of copper alone had copper uptakes of 4.9, 2.7, and 1.8 percent, respectively. The quantity of plant material at the end of the test for the four test conditions was similar, varying between 26 and 30 percent of that of the untreated cultures. The pH and alkalinity of the irrigation water used was 7.6 and 60 p/m; however, these levels shifted considerably throughout the test and varied according to the different water treatments. These results indicate that citric acid enhanced the uptake of copper at the 1 p/m level, while at the 5 p/m copper level there was a decrease in the percentage of copper absorbed even with the addition of citric acid.

These results indicate that certain levels of citric acid can enhance the uptake of copper by aquatic vegetation even in water having a medium level of alkalinity. Also the data show that plants readily absorb copper from low concentrations in the water, indicating that maximum utilization of the copper and effective plant control can be achieved most economically by keeping the copper concentration low when applying CSP continuously.

CSP Plus Diquat.—CSP plus diquat, an effective aquatic herbicide in certain situations, has shown effectiveness for some aquatic species and conditions in Florida. A combination of CSP plus diquat results in better control of some aquatic plants than when these herbicides are applied individually [31]. In laboratory evaluation tests at Denver, the combination showed little advantage in using the combination over that of either used alone. Again several factors such as water quality, weed species, water velocity, pH, and suspended sediments influence the benefits of such combinations and they must be fully evaluated for specific conditions before considering their use.

CSP Plus Aliquat.—CSP and aliquat, a quaternary ammonium compound, used in combination, demonstrated effectiveness for aquatic weed control in certain situations in California. Under certain conditions, the combination appears to give effective aquatic weed control, but it may not be economical and practical for all weed problems. Experimental work is underway by personnel of the Agricultural Research Service, U.S. Department of Agriculture, at the Aquatic Weed Station at Davis, Calif., to determine the merits of this combination.

REFERENCES

[1] OTTO, N. E. and T. R. BARTLEY. "Aquatic Pests on Irrigation Systems: Identification Guide." A Water Resources Technical Publication. USDI, Bureau of Reclamation. 1965.

[2] MOORE, G. T. and K. F. KELLERMAN. "A Method of Destroying or Preventing the Growth of Algae and Certain Pathogenic Bacteria in Water Supplies." USDA, Bureau of Plant Industry, Bull. No. 64. 1904.

[3] MOORE, G. T. and K. F. KELLERMAN. "Copper as an Algicide and Disinfectant in Water Supplies." USDA, Bureau of Plant Industry, Bull. No. 76. 1905.

[4] SCHACHTERLE, D. M. "Algae Control with Copper Sulfate on Irrigation Systems: Algae Control Demonstration Trials." Special Report. USDI, Bureau of Reclamation. 1962.

[5] NIELSEN, GEOFFREY D. "Practical Method of Controlling Algae in Irrigation Canals." USDI, Bureau of Reclamation. A paper presented at the ASCE Water Resources Conference. October 1967.

[6] BARTLEY, T. R. "Algae Control on Irrigation Canals by Continuous Low Rate Feed of Copper Sulfate." Research Progress Report, Western Society of Weed Science, pp. 100–101. 1969.

[7] EL DIN, H. S. and K. W. JONES. "Copper Sulfate as an Aquatic Herbicide." Nature, No. 4421, p. 187. 1954.

[8] DERBY, R. L. and D. W. GRAHAM. "Control of Aquatic Growths in Reservoirs by Copper Sulfate and Secondary Effects of Such Treatments." Proceedings of the American Society of Civil Engineers, Vol. 79, Separate No. 203, 15 pp. 1953.

[9] BARTLEY, T. R. "Progress Report on Evaluation of Copper for Aquatic Weed Control and Herbicide Residues on Irrigation Systems." USDI, Bureau of Reclamation, Report No. WC–32. 1967.

[10] BARTLEY, T. R. "Evaluation of Copper Sulfate for Control of Pondweeds in Irrigation Canals." Research Progress Report, Western Weed Control Conference, pp. 116–119. 1967.

[11] NELSON, J. L., V. F. BRUNS, C. C. COUTANT, and B. L. CARLILE. "Behavior and Reactions of Copper Sulfate in an Irrigation Canal." Pesticide Monitoring Journal, Vol. 3, No. 3. 1969.

[12] ANON., Part 121—Food Additives, Subpart D—Food Additives Permitted in Food For Human Consumpcion—Copper. Federal Register, Vol. 37, No. 202, p. 21991, October 18, 1972.

[13] ANON., Part 180.—Tolerances and Exemptions from Tolerances for Pesticide Chemicals in or on Raw Agricultural Commodities, Subpart D, Paragraph 180.1021, Copper; Exemption from the Requirement of a Tolerance. Federal Register, Vol. 37, No. 31, pp. 3352–53, February 15, 1972.

[14] BARTLEY, T. R. "Copper Residue on Irrigation Canal." Abstract No. 98, 1969 meeting of Weed Science Society of America. 1969.

[15] MCKEE, J. E. and H. W. WOLF. "Water Quality Criteria." The Resources Agency of California, State Water Quality Control Board, Publ. No. 3–A, 548 pp. 1963.

[16] TARZWELL, C. M. "Water Quality Criteria for Aquatic Life." Biological Problems in Water Pollution, Seminar Transactions. Robert A. Taft Sanitary Engineering Center, HEW, Public Health Service, p. 246. 1957.

[17] TRAMA, F. B. "The Acute Toxicity of Copper to the Common Bluegill (*Lepomis macrochirus* Rafinesque)." Notulae Naturae. Academy of Natural Sciences of Philadelphia, p. 257. 1954.

[18] MCKIM, J. M. and D. A. BENOIT. "Effects of Long Term Exposures to Copper on Survival, Growth, and Reproduction of Brook Trout (*Salvelinus fontinalis*)." Journal of the Fisheries Research Board of Canada, Vol. 28, No. 5, pp. 655–662. 1971.

[19] MOUNT, D. I. and C. E. STEPHAN. "Chronic Toxicity of Copper to the Fathead Minnow (*Pimephales promelas*) in Soft Water." Journal of the Fisheries Research Board of Canada, Vol. 26, No. 9, pp. 2449–2457. 1969.

[20] HAZEL, CHARLES and STEPHEN J. MEITH. "Bioassay of King Salmon Eggs and Sac Fry in Copper Solutions." California Fish and Game, Vol. 56, No. 2, pp. 121–124. 1970.

[21] LIN, CHANG K., ALRAE J. NEMO, and DENNIS L. VEDDER. "Copper Residue in Rainbow Trout." Hyacinth Control Journal, Vol. 10, pp. 43–44. May 1972.

[22] ARTHUR, JOHN W. and E. N. LEONARD. "Effects of Copper on *Gammarus pseudolimnaeus, Physa integra,* and *Campeloma decisum* in Soft Water." Journal of the Fisheries Research Board of Canada, Vol. 27, pp. 1277–1283. 1970.

[23] GOETTL, JOHN P., JR., JAMES R. SINLEY, and PATRICK H. DAVIES. "Water Pollution Studies." Department of Natural Resources, Colorado Division of Wildlife. 1973.

[24] CUNNINGHAM, I. J. "Copper and Molybdenum in Relation to Diseases of Cattle and Sheep in New Zealand." Copper Metabolism, Johns Hopkins Press, Baltimore, Md., p. 246. 1950.

[25] ANON., Ohio River Valley Water Sanitation Commission, Subcommittee on Toxicities, Metal Finishing Industries Action Committee. Report No. 3. 1950.

[26] HALE, F. E. "Relation of Copper and Brass Pipe to Health." Water Works Engineering, Vol. 95. 1942.

[27] GILBERT, FRANK A. "Copper in Nutrition." Advances in Agronomy, Vol. IV, pp. 147–177. 1952.

[28] "Public Health Service Drinking Water Standards." HEW, Public Health Service Publ. No. 956, p. 39. 1962.

[29] BARTLEY, T. R. and N. E. OTTO. "Progress Report of Antifouling Materials for Algae Prevention." USDI, Bureau of Reclamation, Report No. WC–30. 1967.

[30] GELFAND, MAX. "Algaecide." United States Patent No. 2,400,863, May 21, 1946.

[31] BLACKBURN, R. D. and L. W. WELDON. "Control of *Hydrilla verticillata*" (Abstr). Proceedings, Southern Weed Control Conference, Vol. 22, p. 317. 1969.

U.S. GOVERNMENT PRINTING OFFICE: 1976—O-599-908