GR-14-77

RESEARCH ON WETTING COLLAPSIBLE FOUNDATION SOILS

Earth Sciences Branch
Division of General Research
Engineering and Research Center
and Westlands Water District Office
Central Valley Project, California
Bureau of Reclamation

September 1977

MS-230 (1-76)
Bureau of Reclamation

TECHNICAL REPORT STANDARD TITLE PAGE

1. REPORT NO. GR-14-77	2. GOVERNMENT ACCESSION NO.	3. RECIPIENT'S CATALOG NO.
4. TITLE AND SUBTITLE Research on Wetting Collapsible Foundation Soils		5. REPORT DATE September 1977
		6. PERFORMING ORGANIZATION CODE
7. AUTHOR(S) John P. Bara		8. PERFORMING ORGANIZATION REPORT NO. GR-14-77
9. PERFORMING ORGANIZATION NAME AND ADDRESS Engineering and Research Center, Bureau of Reclamation, Denver, Colorado 80225		10. WORK UNIT NO.
		11. CONTRACT OR GRANT NO.
12. SPONSORING AGENCY NAME AND ADDRESS USBR Project Office, Westlands Water District, Central Valley Project, California		13. TYPE OF REPORT AND PERIOD COVERED
		14. SPONSORING AGENCY CODE

15. SUPPLEMENTARY NOTES

16. ABSTRACT

Irrigation of collapsible soils densifies them near ground surface. For underground pipelines, near-surface soils that have never been irrigated and are highly collapsible should be prewetted to cause soil collapse. The wetted stabilized pad supports the pipe and resists further subsoil collapse beneath and adjacent to the pad.

The Bureau criteria for liquid limit natural dry density establishes the degree of looseness or collapsibility of the subsoils. Wetting tests were conducted on lateral 7R to determine minimal preconstruction foundation treatment for structures on collapsible soils. Fifteen test sections of 5.6-km total length were installed to compare surface flooding and sprinkling methods, with and without infiltration wells. A total of 9 m of applied irrigation water, usually hydrocompacted the upper 15 m of soil adequately for supporting pipelines and small pumping plants. Seepage and settlement rates and the time required for wetting subsoils to depths of 15 m are given. Ponding or sprinkling subsoils without wells saved water, but took 60 to 90 days to reach a 15-m depth where impervious layers did not prevent infiltration.

17. KEY WORDS AND DOCUMENT ANALYSIS

a. DESCRIPTORS–/ ponding/ infiltration water wells/ pre-treatment (water)/ seepage/ surface irrigation/ soil mechanics/ subsidence/ soil engineering

b. IDENTIFIERS–/ Bureau of Reclamation/ California/ San Luis Canal/ collapsible soils/ wetting test methods

c. COSATI Field/Group 8 m COWRR: 0813

18. DISTRIBUTION STATEMENT	19. SECURITY CLASS (THIS REPORT) UNCLASSIFIED	21. NO. OF PAGES 19
	20. SECURITY CLASS (THIS PAGE) UNCLASSIFIED	22. PRICE

GR-14-77

RESEARCH ON WETTING COLLAPSIBLE FOUNDATION SOILS

by

John P. Bara

Earth Sciences Branch
Division of General Research
Engineering and Research Center
Denver, Colorado
Westlands Water District Office
Central Valley Project, California

SI METRIC

September 1977

UNITED STATES DEPARTMENT OF THE INTERIOR * BUREAU OF RECLAMATION

ACKNOWLEDGMENTS

This study was a typical Bureau of Reclamation team effort. Design Engineer James Warden at the Denver Engineering and Research Center was instrumental in preparing the specifications for the prewetting tests and the construction of lateral 7R. William Fraser, Field Engineer at the time of these tests, and Project Construction Engineer at this writing, monitored the field activities. The work was directed by the then Project Construction Engineer E. J. Brannon, retired. Dr. Nicholas Prokopovich, Geologist from the Mid-Pacific Regional Office in Sacramento, California, summarized much of the field data.

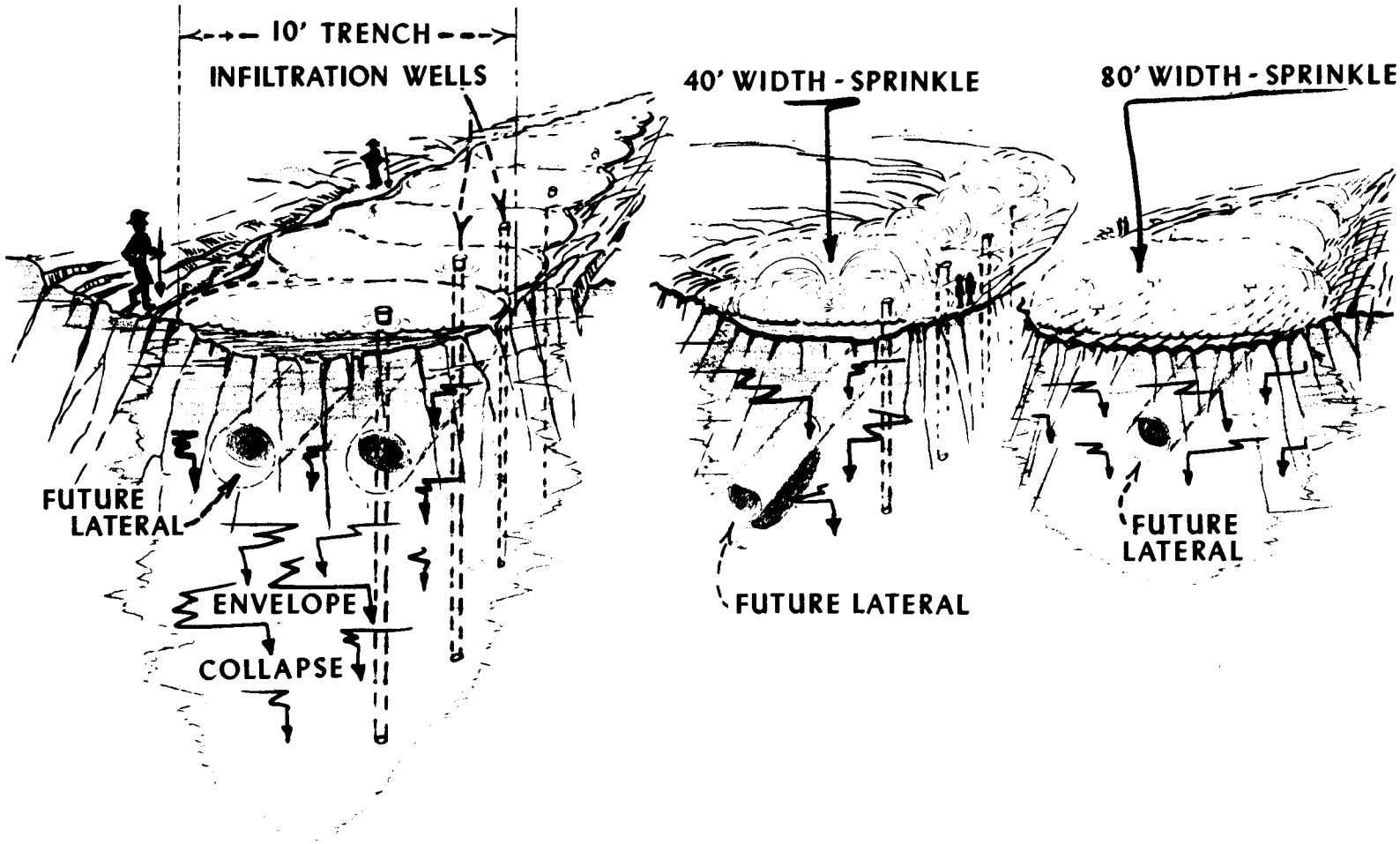

Frontsipiece.–Preconstruction treatment methods for collapsing subsoils.

CONTENTS

TABLE

CONTENTS—Continued

FIGURES

APPLICATIONS

The applied research conducted on the precollapsing of subsoils along lateral 7R was very beneficial to the Bureau. Many miles of preconstruction wetting along laterals 5R, 6R, 7R, 8R, 9R, and 10R were not called for in specifications No. DC-7166 because our studies showed that only about half of the pipeline foundations should be precollapsed out of about 130 km of pipelines to be built in the subsidence area. The current cost of prewetting pipeline foundations is about $30,000/km under specifications No. DC-7166. Of course, the knowledge obtained from lateral 7R research studies also permitted better specification estimates of water quantities for other wetting operations to be performed. The reduced amount of preconstruction foundation watering conserved valuable water which was very scarce in the Central Valley, California, during these tests.

INTRODUCTION

The most effective means of preconditioning loose, dry, fine-grained subsoils at the depth required for hydraulic structure foundations, is to wet (or pond) them so they will subside or collapse to a more stable condition. Collapsible soils of this type go through a radical rearrangement of particles and great loss of volume upon wetting with or without additional loading. When water seeps into a collapsible soil (ponded) area, the most severe cracking occurs in the zone just outside of the wetted area where differential movements are greatest. As wetting progresses, the bulb of saturation increases laterally and vertically, and as soils at that depth collapse, the dry near-surface soils outside the ponded area crack vertically. It is frightening to peer into massive subsidence cracks, some more than 0.5 m wide and over 5 m deep. The amount of wetting needed, depends on the importance of the structure, cost of repairs, and the collapsibility of the subsoils. The gigantic San Luis Canal, in California, which is over 10 m deep, 61 m wide, and carries 368 m^3/s of water, was constructed through an area of collapsible soils. Preconstruction wetting of these soils, over a 1-year period, resulted in virtual saturation of the subsoils down to the water table, about 55 m deep. Settlements attributable to the prewetting exceed 2 m in some areas along the canal.

The Westlands Water Distribution System, under construction during this test, takes water from the San Luis Canal. About 160 km of pipelines up to 2 m in diameter and 20 pumping plants and reservoirs will be built over collapsing soils which are known to have subsided over 4 m in one area. Since the distribution system consists of smaller off-line structures and the water table is over 120 m below ground surface, some preconstruction foundation treatment is necessary if serious foundation failures and high postconstruction maintenance are to be avoided. The problem is to delineate the critical subsidible areas, apply the right amount of water to the subsoils, and collapse them sufficiently to form a stable pad beneath the structures before they are built.

In 1969, experimental wetting was begun along lateral 7R so the performance of the pipelines and pumping plant could be monitored for several years, and the data used before extensive work would be done in the subsidence area within the district. As a result of these long-range investigations, and experience gained from the subsidence studies on the San Luis Canal, which has performed admirably for 9 years, only about half of the pipeline foundations in the district will be hydrocompacted. Specifications No. DC-7166 was issued for the preconsolidation of about 70 km of laterals.

Previous analyses of soil conditions have indicated that in critical areas a 15-m-thick pad of collapsed soil would reduce future differential movements and protect the pipeline from extensive cracking of the subsoil when adjacent fields are irrigated. Likewise, at the pumping plant reservoir sites, a 41-m-wide by 76-m-long by 34-m-thick pad of collapsed soil was indicated to stabilize the foundations for the pumping units and the adjacent reservoir embankments. This experience has been confirmed by performance along the lateral 7R pipeline to date.

Field investigations were used to obtain soils information on the existing foundation conditions and establish the reaches where prewetting would be necessary. This information, laboratory testing, and irrigation history, together with the lateral 7R studies were used to select the wetting method and the reaches to be prewetted.

The liquid-limit natural density criteria for the identification of collapsing soils and the installation of infiltration wells to produce subsidence has been explained in previous publications [1, 2, 3].[1] Other investigations have also studied the California mudflow deposits in the dry, semiarid San Joaquin Valley [4, 5, 7] and also a broad overview of collapsing soils is presented[6]. Geologically the mudflow deposits in this area are described as Piedmont alluvium.

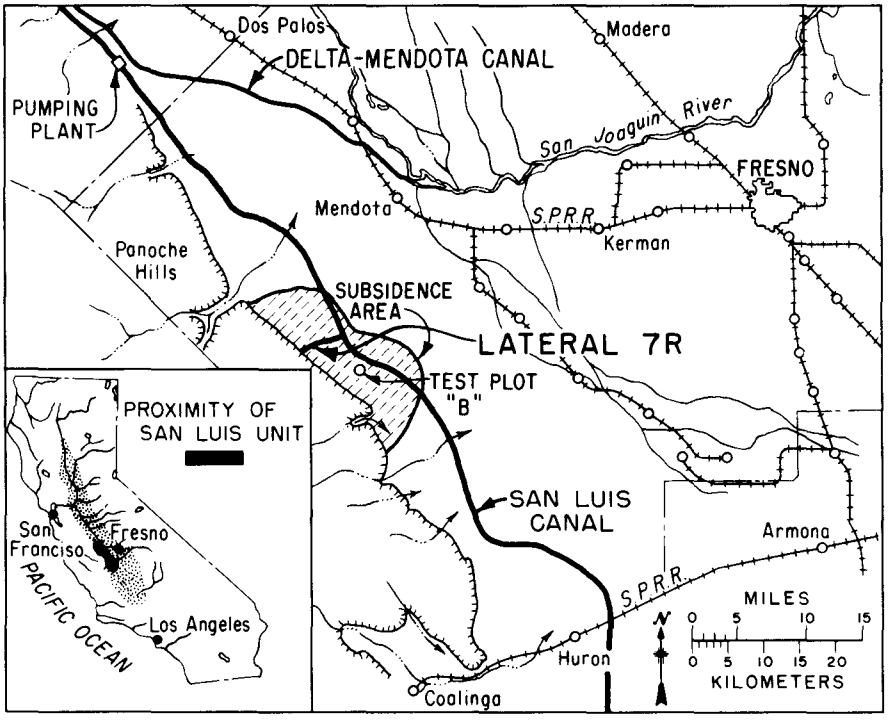

Figure 1.–Pipeline No. 7R is built over collapsing subsoils.

CONCLUSIONS

1. In the San Joaquin Valley of California, agricultural irrigation of collapsible mudflow deposits tends to consolidate them from the ground surface downward, according to the

[1] Numbers in brackets refer to literature cited in the bibliography.

quantity of applied water. A total of 9 m of irrigation water has densified, to some extent, the upper 15 m of subsoils so that the need of additional prewetting of this zone is probably unnecessary. Pipelines and small pumping plants could be built on these deep deposits of collapsible subsoils on a calculated risk basis.

2. Nonirrigated lands or those with no extensive previous irrigation are wetted to precollapse foundation soils to stabilize a pad which will support hydraulic structures. This pad must resist further subsoil collapse beneath, and adjacent to, the structures when future wetting of the area occurs.

3. Irrigation records may not be accurate; therefore, systematic drilling, sampling, and use of the liquid-limit, natural-density criteria are necessary for confirmation of existing foundation conditions.

4. Surface flooding (ponding) or sprinkling in conjunction with infiltrating through wells is the most efficient and most rapid wetting method to get large quantities of water to move vertically and laterally through the subsoils. Use of 12-m-deep infiltration wells on 12-m centers collapsed 15 m of soil in only 30 days.

5. Ponding or sprinkling without infiltrating through wells saves water but takes 50 to 90 days to reach a 15-m depth unless impervious layers prevent vertical infiltration. Experience shows justification in the use of wells for wetting to reach the depth desired.

6. Pumping plants and reservoir sites require a minimum of 3- to 4-months wetting time to reach a 33-m depth using 30-m-deep wells on 30-m centers in conjunction with surface wetting operations.

7. Whenever foundation wetting methods change abruptly along continuous line structures (pipeline), transitions should be provided to reduce the effects of differential

movements. Flexibility must be designed into continuous structures built over collapsing soils because subsoils will continue to move as future wetting continues.

8. Research on collapsible soils along lateral 7R resulted in cost and water volume savings in subsequent construction. Only about half of the structure foundations along laterals 6R, 8R, 9R, and 10R were treated, which reduced construction costs and watering requirements at a time when there was a critical water shortage in the San Joaquin Valley.

Selection of Test Site

This research study was conducted at a selected location considered to be of only moderate to high subsidence where the subsoils had been subjected to a wide range of previous irrigation wetting. Foundation soils south of lateral 7R along laterals 8 and 9 near the Bureau's test plot B were known to be far more collapse susceptible (fig. 3). Such areas of very high collapse potential would require extensive wetting treatment because the collapse could be as high as 4 m, depending on the wetting method and time period of water application. This study at lateral 7R was to define marginal condition areas where anyone could economize by eliminating or reducing foundation treatment.

Lateral 7R was selected for the test area because it has a history of irrigation which varies from a 14-m depth of applied irrigation water to none. Figure 1 shows the approximate location of lateral 7R and its junction with the San Luis Canal in the San Joaquin Valley of California. Some of the metastable soils, which are abnormally loose as deposited, and which may collapse upon saturation, exist in the known subsidence area at the Bureau's test plot B and the California Department of Water Resources' Mendota Test Site in the same vicinity as test plot B.

Representative data are shown (fig. 2) of the variable foundation conditions found along lateral 7R. The loosest soil condition which required prewetting is represented by the

in-place sample data at the 7RC pumping plant site at station[2] 215+24 which had never been irrigated. The more stable soil condition was found at the pumping plant site, 7RB, at station 108+11, where an estimated total of 14 m of irrigation water had been applied before 1969. No preconstruction foundation wetting was considered necessary at this site.

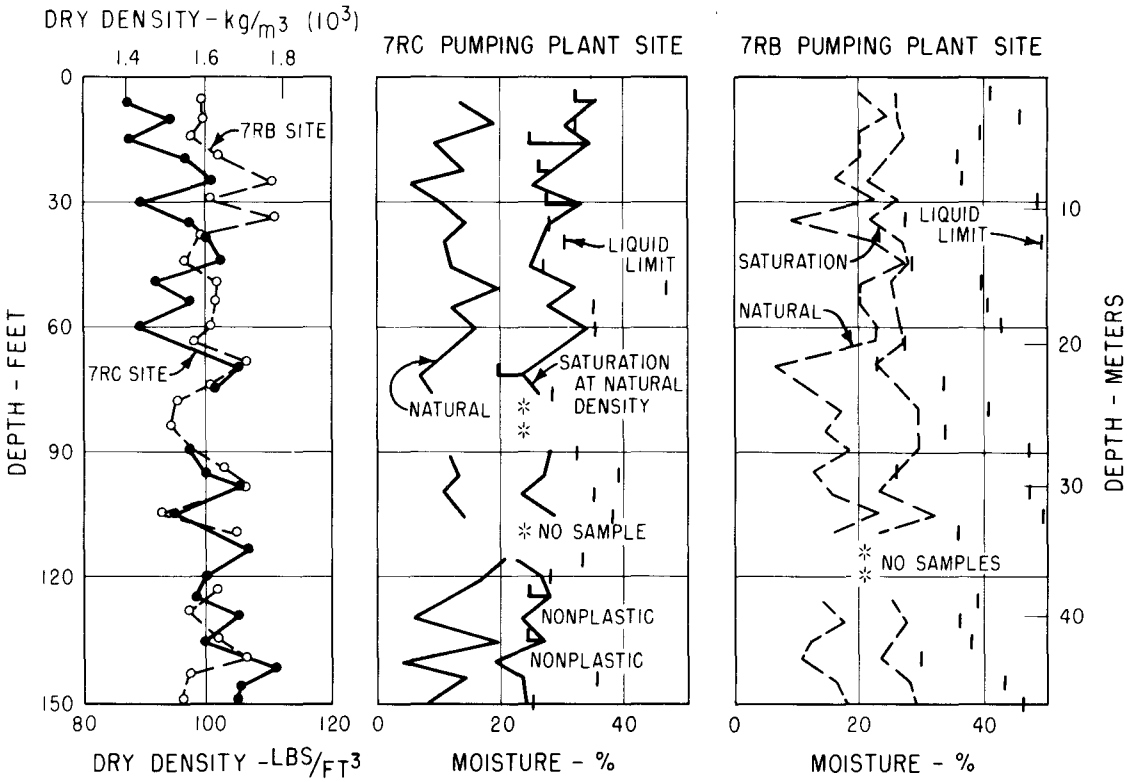

Figure 2.–Range of pipeline 7R foundation conditions.

Identification of Collapsible Soils

The criterion, used by the Bureau to estimate the susceptibility of subsoils to collapse, requires data (fig. 2) which includes natural dry density, natural moisture, liquid-limit

[2] All stationing in this report are in feet, to conform to data contained in Bureau specifications No. DC-6880.

moisture, and the computed moisture required for saturation at each natural density. The criterion is that when the liquid-limit moisture in a soil is less than the saturation moisture, that soil can be wetted to or above the liquid limit. At that point collapse is possible because the shear strength is reduced to near zero and the soil could collapse. The relationships among these properties indicate the collapsibility of the soil at any particular depth. The higher the density, the less susceptibility to collapse. A soil with natural moisture content greater than the liquid limit is already wetted sufficiently to collapse, even though not saturated; because, the shear strength is essentially near zero at, or above, the liquid limit. The most important indicator shown (fig. 2) is when the natural moisture is less than the liquid limit, and the liquid limit is less than the saturation moisture. Under these conditions the soil is collapsible and the amount of collapse will depend on the natural density; the less dense the soil, the greater the amount of collapse. Also, complete saturation is not a prerequisite to initiate soil collapse.

Data from the 7RC site show seven depths at which the soils are susceptible to collapse, while at the 7RB site the natural densities are sufficiently high that even upon saturation the natural moistures cannot approach or exceed the respective liquid-limit moistures.

Subsidence Studies for San Luis Canal

In earlier investigations eight test ponds (30- x 30-m ponded areas) were instrumented [2] in subsidible areas of known irrigation history near the San Luis Canal, with settlement benchmarks at 7.6-, 15.2-, and 30.5-m depths (fig. 3). The tests show even a limited amount of periodic wetting during irrigation has a tendency to densify the soils near the surface. The areas with more than 3 to 6 m of applied water have been collapsed to 8 m deep. In low density areas where less than 3 m of irrigation water was applied, a considerable amount of collapse occurs even in the upper 8 m, so prewetting is considered essential in these areas of low density. Subsoils with irrigation histories of only 3 to 9 m of penetration usually require wetting, but decisions are deferred until the liquid-limit, natural-density data can be analyzed. Areas that have received 9 m or more of water appear to have already

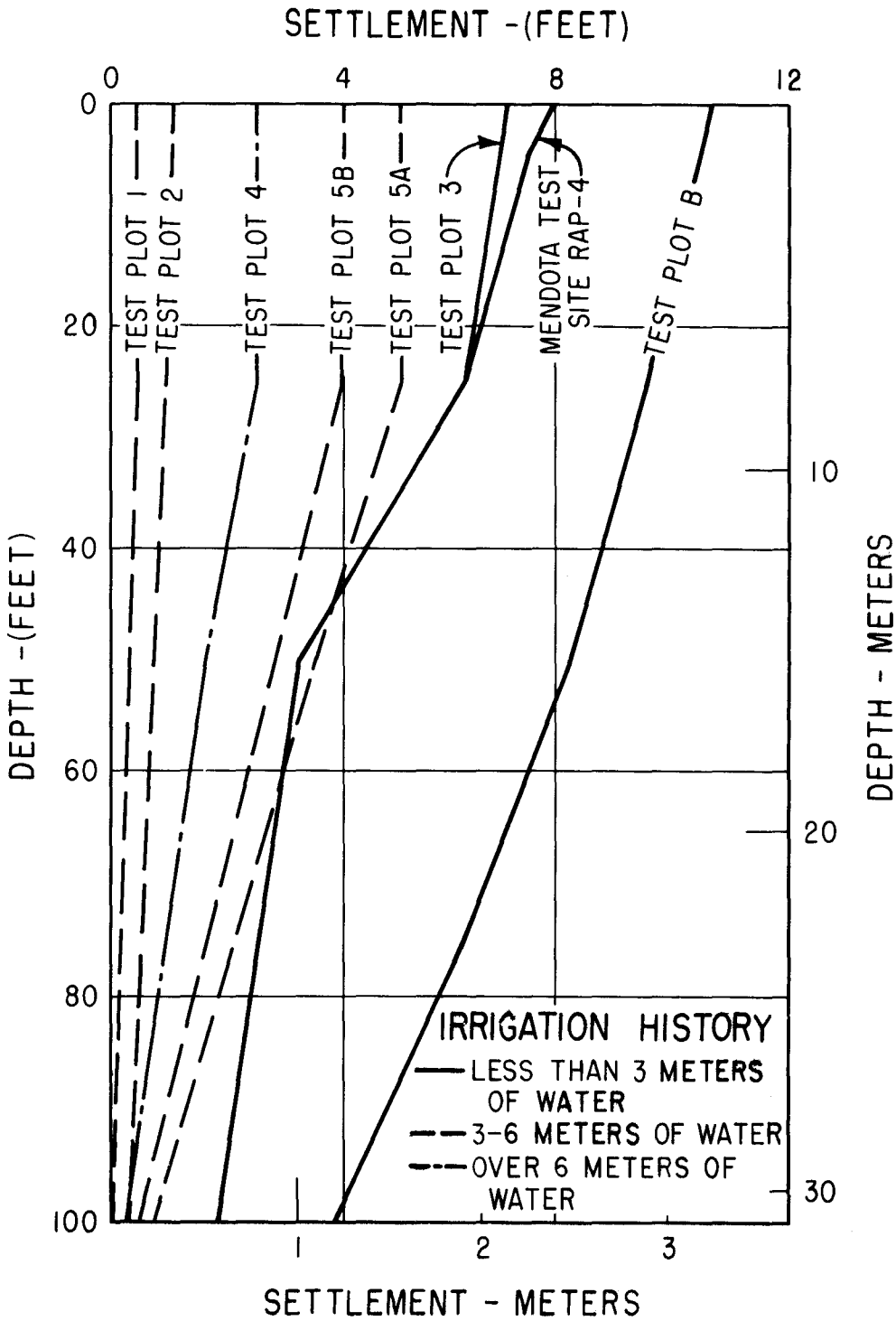

Figure 3.–Test ponds permit the study of settlement at depth due to wetting subsoils.

densified to a significant depth of 15 m or more. These areas have developed a pad of adequate thickness for the support of small structures. After the structures are built, movements can continue for many years depending on the rate and depth of future wetting operations in the vicinity. Movements should, however, be within the limits which could be tolerated by the structures.

Estimated Irrigation History

Gravity-ditch irrigation had been used initially in this district which includes the test areas, but as the ground surface subsided differentially, farmers had to switch to sprinkling methods because land leveling was not practicable. Ditch irrigation was more effective in causing subsidence than sprinkling, so analyses of in-place soil conditions was essential to determine the magnitude of subsoil densification attained due to past applications of irrigation water.

The junction where lateral 7R branches from the San Luis Canal is in an area where approximately 14 m of irrigation water had been applied in the past. In this area, maximum settlements along the San Luis Canal were about 1 m; however, as shown by benchmarks, two-thirds of this amount occurred 23 m below the surface. From the junction, station 0+00, to (sta. 190+00) lateral 7R, soil moisture and density conditions are such that prewetting of subsoils to 15 m deep would not produce any significant soil collapse. Between stations 0+00 and 137+00, 14 m of irrigation water had been applied. The site for Pumping Plant 7RB at station 108+11 was not prewetted during construction because of the stable conditions indicated (fig. 2). Between stations 137+00 and 190+00 only 8 m of water were previously applied. Since this was an experimental reach, no prewetting was done between stations 0+00 and 190+00 to confirm that these subsoils are sufficiently stable for supporting small structures. The lateral 7R pipeline was installed with gages attached to measure vertical movement and its performance will be monitored for at least 5 years. An above-normal risk is involved in this experimental reach because

there could be areas that may not have been irrigated as indicated because the records are inaccurate.

WETTING METHODS USED TO COLLAPSE THE SUBSOILS

The 5.7-km reach, between stations 190+00 and 376+97, was selected for a variety of wetting tests because less than 2-m water had been applied. The test sections were selected to study the comparative efficiency of flooding to sprinkling methods, and variations of each, with and without infiltration wells.

Testing conditions were as follows:

Flooding method

1A –Flooding a trench with a 3-m-wide wetted surface (fig. 4) for a pipeline foundation.

1B –Same as 1A with 12-m-deep infiltration wells on 12-m centers (fig. 4B) for a pipeline foundation.

1C –Flooding and four infiltration wells on 30-m centers and 30 m deep in a pond 41 by 76 m for a pumping-plant reservoir site.

Sprinkling method

2A –Sprinkling a 12-m-wide strip after loosening the ground surface with a disk harrowing machine.

2B –Same as 2A with 12-m infiltration wells on 12-m centers (fig. 5).

Figure 4a.–Wetting test method A, in progres

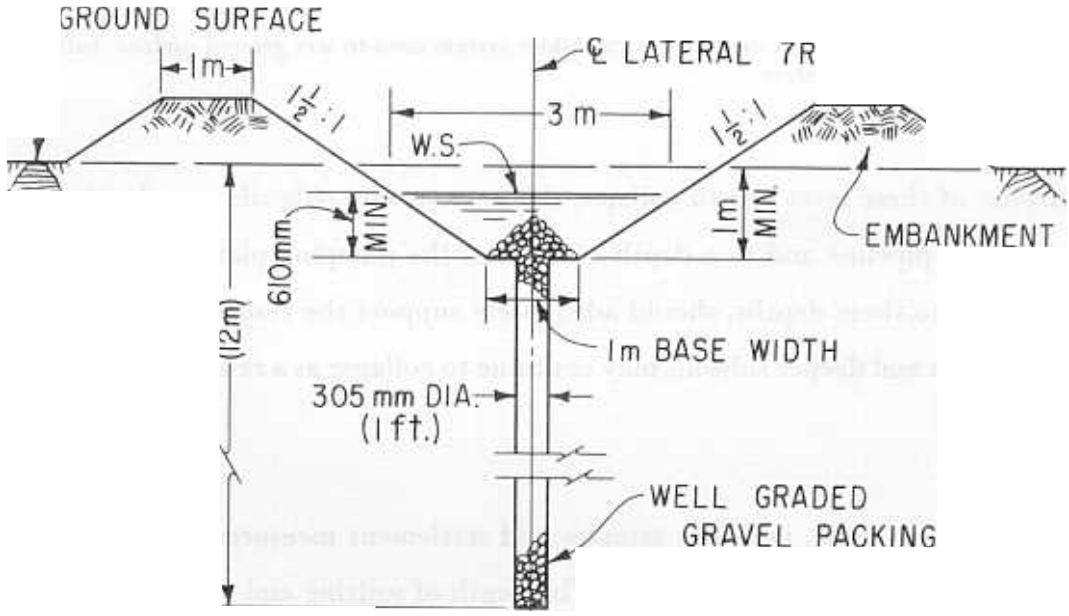

gure 4b.–Subsoil wetting test method B. ooded trench with infiltration wells on 12-m enters.

2C –Sprinkling a 24-m-wide strip, often loosening the ground surface with a disk harrowing machine.

2D –Same as 2C, but ground surface not disked.

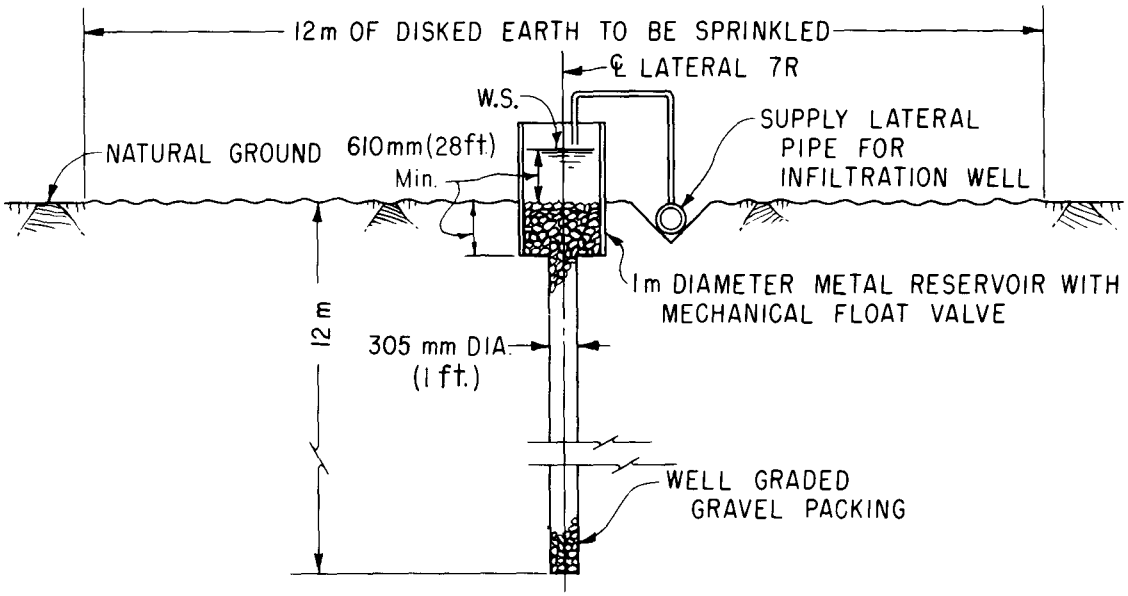

Figure 5.–Subsoil wetting test method 2B. Sprinkler system used to wet ground surface. Infiltration wells placed on 12-m centers.

The purpose of these tests was to collapse the near-surface subsoils to a depth of at least 15 m along the pipeline and to a depth of 34 m at the pumping plant and reservoir sites. Stabilized soil, to these depths, should adequately support the respective structures, even though adjacent and deeper subsoils may continue to collapse as a result of future irrigation in the area.

Along the pipeline route, moisture samples and settlement measurements were taken 15, 30, 45, and 60 days after wetting began. The depth of wetting and related ground surface movements were determined by these measurements. As soon as the subsoils were wetted to a 15- to 18-m depth, the wetting operation was terminated. Additional settlement

readings were taken 6 and 12 months after the wetting began. These readings enabled the study of longer term subsoil movements which would occur if construction of the structures immediately followed the wetting operations.

To assure the wetting of subsoils to depth 34 m at the pumping plant and reservoir sites, moisture samples and settlement readings were taken at 3-, 4-1/2-, and 6-month intervals. All moisture samples and settlement readings were taken midway between infiltration wells, to assure that the seepage had traveled laterally and wetted all soils between the wells.

RESULTS OF WETTING TESTS

The 15 test sections (fig. 6) along lateral 7R are numbered consecutively. The quantity of water used at each test section was measured. The depth and time of wetting, as well as average seepage rates per unit length of pipeline, are also shown (fig. 6), along with the measured subsidence in each test reach. The total amount of water applied per unit length of pipeline is of little value when comparing seepage rates at various sites along the lateral because of the different conditions; that is, if there were wells or no wells, or different surface areas resulting in varied bulbs of saturation for the seven methods.

The total quantity of water used at all test sections was reduced to depth of applied water in meters over the known wetted ground surface area. No attempt was made to adjust for such things as evaporation losses or infiltration wells. The total seepage per unit length of pipeline was divided by the width of the wetted test section at ground surface (table 1) to reduce the necessary watering requirements. Test method 1A (flooded trench width of 3 m without wells) (table 1) required 15 m of water to collapse the subsoils to a depth of 15 m. Test method 1B, where 12-m-deep wells were installed, required about three times as much water, but the wetting period was only 33 days compared to 63 days for 1A.

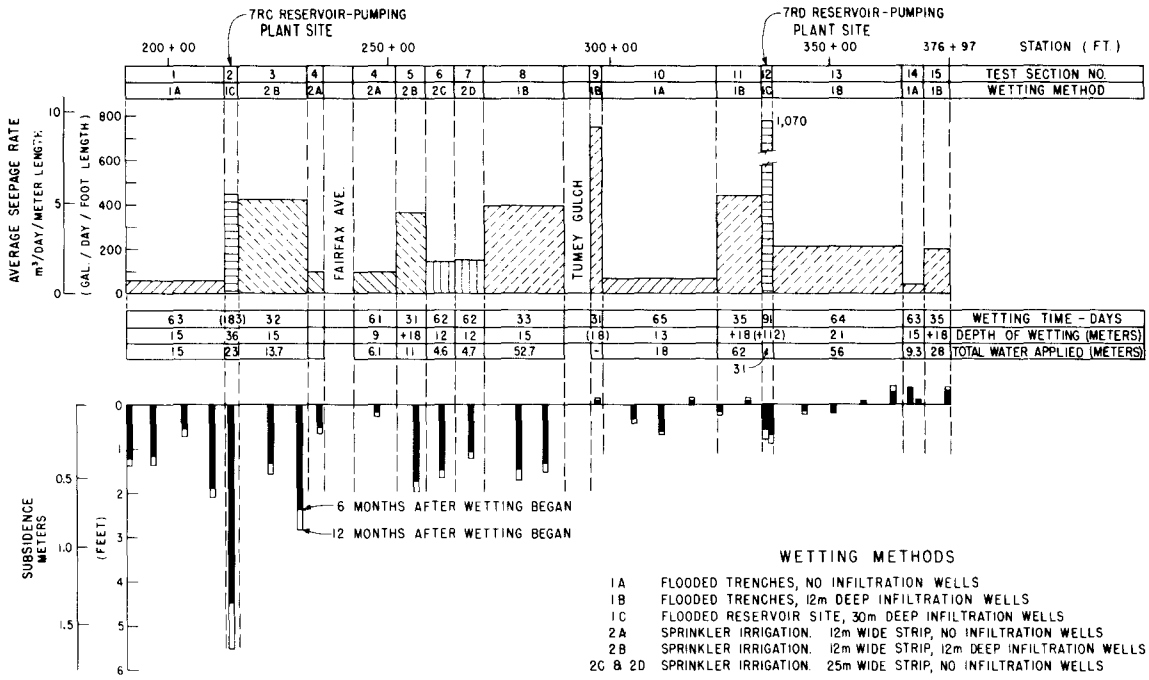

Figure 6.–Subsidence and seepage rates for wetting methods used.

Table 1.–*Field wetting data for eight test sections*

	Depth of infiltration wells (m)							
	No wells				12-m wells			30-m well
Test section number	1	4	6	7	3	5	8	2
Wetting method	1A	2A	2C	2D	2B	2B	1B	1C
Width of test section (wetted surface) (m)	3	12	25	25	12	12	3	43
Depth of water penetration (m)	15	9	12	12	15	18+	15	36
Total water applied (m)	15	6.1	4.6	4.7	13.7	11.4	52.7	23.4

A 12-m-wide sprinkler strip, test method 2A, required only 6.1 m of water but only penetrated to 9 m deep, while test method 2B with 12-m infiltration wells, required 13.7 m of water to reach 15 m deep. Where the 24-m-wide sprinkled strips were watered, test

methods 2C and 2D, only 4.6 m of water attained a 12-m depth. A wider wetted strip with a lower percent water loss due to lateral flow makes the unit area seepage rates lower.

It takes an estimated 9 m of water sprinkled over a large area to collapse subsoils to a depth of 15 m (test data table 1 projected). A narrow 3-m-wide strip flooded, as in method 1A, requires about 15 m of water to penetrate to a 15-m depth.

The total water applied per unit length of pipeline is shown (fig. 7) for the wetting test time. Infiltration wells were most efficient, since they halved the wetting time and doubled or tripled the quantity of water applied to the subsoils. The flooded trench, method 1A, did not use as much water per day as the sprinkled 12-m-wide strip, method 2A. The poorest performing wetting method was test section 4 where the 12-m-wide sprinkled strip without wells was used (method 2A). After 61 days of sprinkling, water had only penetrated 9 m deep. An impervious layer may have restricted the water penetration because a 24-m-wide sprinkled strip in the same area (methods 2C and 2D, test sections 6 and 7) permitted the water to reach only 12 m deep in the same amount of time. Disking the ground surface did not help the water penetrate. Infiltration wells in the same area (test section 5, method 2B), permitted water to reach a depth of 18 m in just 31 days.

The mudflow deposits have a quite variable plasticity and the in-place density varies with the wetting history. Thin impervious layers are uncommon and can prevent flooding and sprinkling methods from being effective unless infiltration wells are installed. The northern 6.4 km of the San Luis Canal subsidence area was ponded without wells for more than a year. One bridge site has since settled more than 1 m because of an extensive impervious clay layer at a depth of 8 m, which prevented subsoil saturation.

An interesting settlement study is possible at the first three test sections where foundation conditions were similar to those shown in figure 2. In test section 2 (method 1C with 30-m wells), about 1.4 m of settlement occurred after 6 months of wetting attained a depth of 37 m. Test section 1, method 1A (without wells), settled only about 0.6 m when water

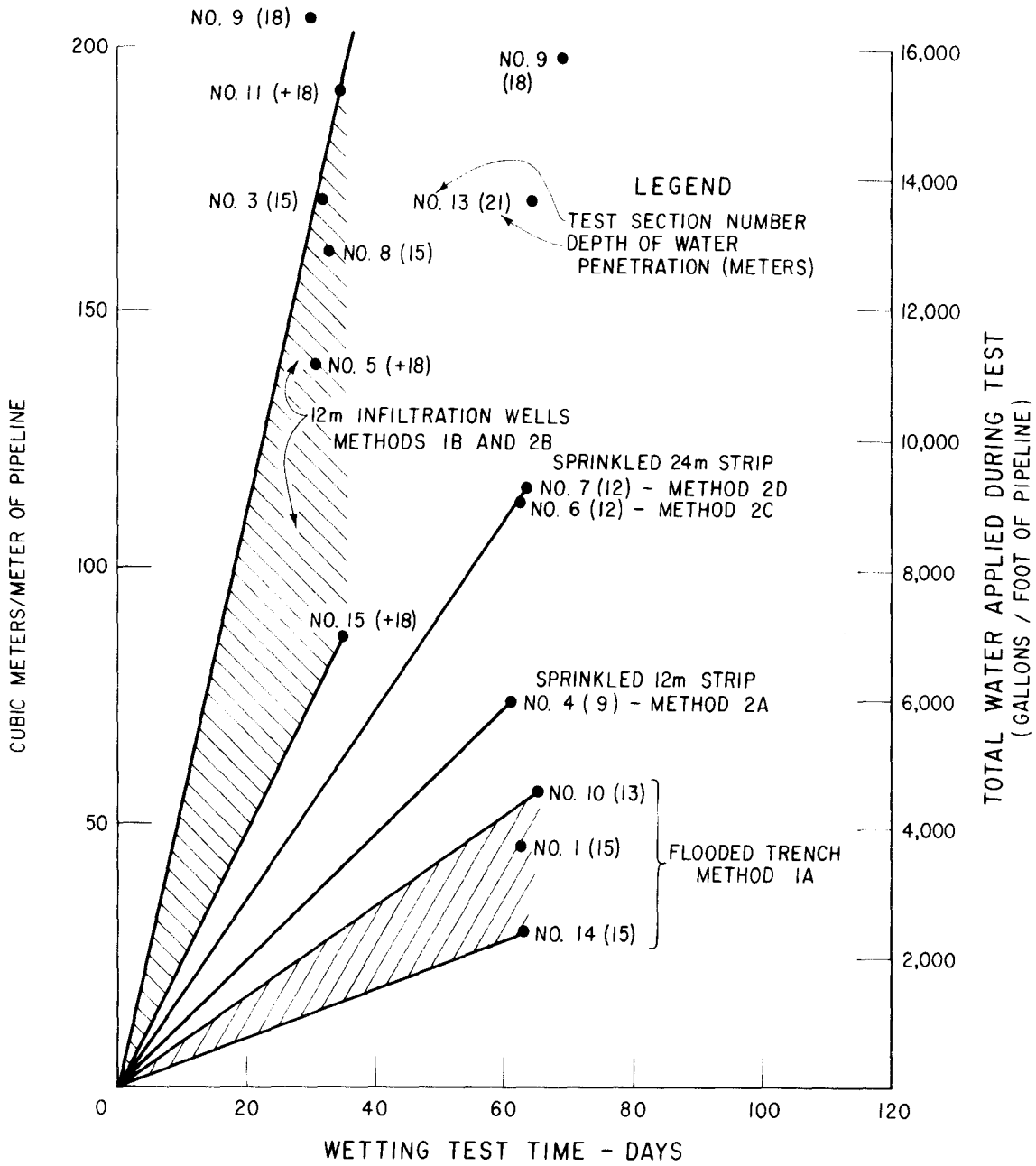

Figure 7.–Total quantity of water used to wet subsoils along pipeline.

penetrated 15 m in 63 days. Test section 3 (method 2B with 12-m wells), settled about the same or slightly more than this amount, for the same depth of wetting in 32 days.

After 1 year, there was about 1 m of differential movement between the pumping-plant reservoir site and the adjacent pipeline foundations. Some of this differential was due to the variation in pond sizes being wetted. Evidence indicates that smaller ponds settle less than the larger ponds. A transition has to be designed into the two adjoining structures by having several 18- and 24-m-deep wells between them. Pipeline performance will be interesting in this area as the depth of wetting varies from 9 to 37 m.

The time-settlement curve for method 1C (fig. 8) shows much more settlement than do the curves for the other methods because of the deeper wells and depth of water penetration. The time-settlement relationship for test method 1C with 30-m wells on the other hand, shows that significant collapse occurred during the first 2 months and continued at a lesser rate; probably 4 months wetting time would have been adequate. This shorter wetting period would reduce the wetted depth to 33 m and probably flatten the long-term settlement curve, which would be desirable. These curves indicate that subsoil movements will continue long after the wetting operations have been terminated. Again, this points out the need for flexibility to be built into the structure design. If schedules permit, structures should not be built over prewetted areas for 3 to 6 months after wetting operations have been completed.

Method 1A, wetting for 60 days, apparently saves on the water used (figs. 6, 7) and attains the desired depth of soil collapse. However, the extent of lateral water movement (fig. 9) to enlarge the pad of collapsed soil is also important. From this, the advantages of wells are apparent. Wetting method 1A showed no movement 16 m from the centerline after 3 months, while method 1B with 12-m wells settled 0.3 m at 16 m out from the centerline.

Method 2B also caused the soil to settle about 0.3 m at 16 m from centerline, while methods 2A, 2C, and 2D caused only 0.15 m of settling. Also methods 2C and 2D caused

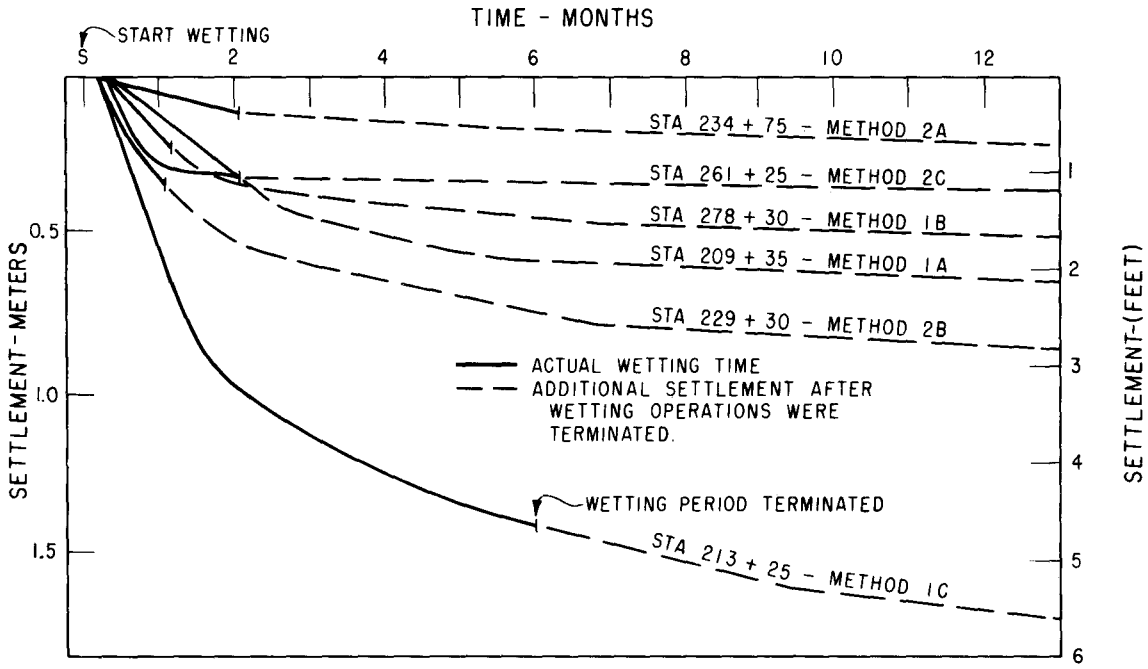

Figure 8.–Typical time-settlement curves for each wetting method.

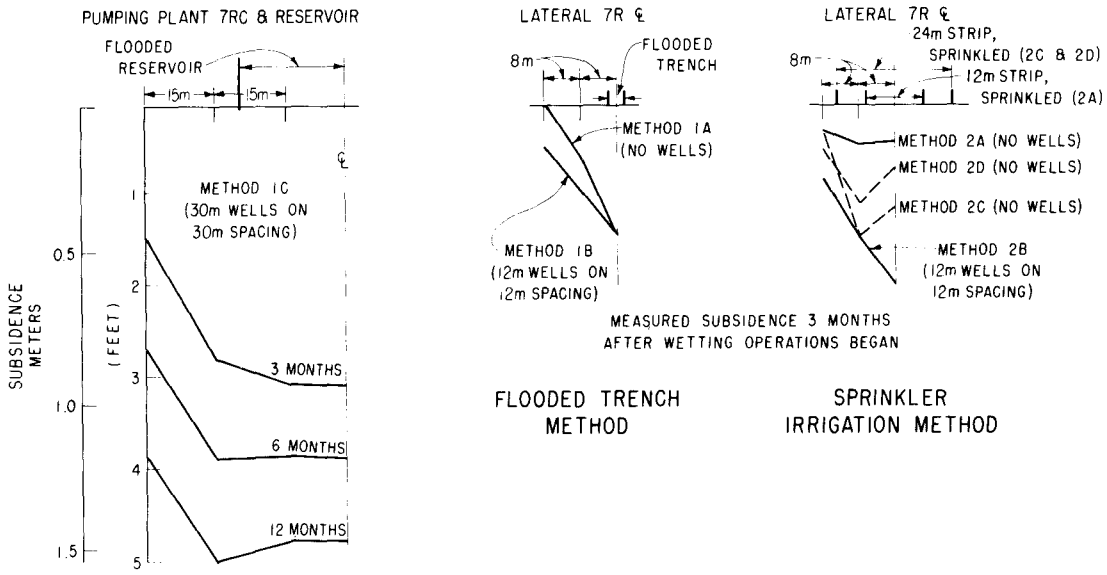

Figure 9.–Subsidence due to lateral movement of water during wetting operations.

the highest settlement 6 m out from the centerline, possibly because the dual sprinkler lines were laid there and more water probably fell in these areas.

BIBLIOGRAPHY

[1] Bara, J. P., "Precollapsing Foundation Soils with Water," Fifth Pan American Conference on Soil Mechanics and Foundation Engineering, Proceedings, Buenos Aires, Argentina, November 19-22, 1975.

[2] Bara, J. P. and Gibbs, H. J., "Stability Problems of Collapsing Soil," Proc. ASCE Journal of Soil Mechanics and Foundations Division, vol. 93 N. SM 4, p. 557-594, July 1967.

[3] Bara, J. P. and Gibbs, H. J., "Predicting Surface Subsidence from Basic Soil Tests," ASTM publication STP 322, Field Testing of Soils, 1962.

[4] Bull, W. B., "Alluvial Fans and Near-Surface Subsidence in Western Fresno County, California," U.S. Geological Survey Professional Paper 437-A, 1964.

[5] Bull, W. B., "Causes and Mechanics of Near-Surface Subsidence in Western Fresno County," U.S. Geological Survey Professional Paper 424, 1961.

[6] Dudley, J. H., "Review of Collapsing Soils," Proc. ASCE, Journal of Soil Mechanics and Foundations Division, vol. 96 N. SM 3, p. 925-947, May 1970.

[7] Lucas, C. V., "Design of the California Aqueduct for Effects of Subsidence," Proceedings, Western Water Power Symposium, p. A-1 to A-9, April 1968.

[8] "Subsurface Investigation for Design and Construction of Foundations of Buildings: Appendices A and B, Task Committee for Foundation Design Manual," Proc. ASCE, Journal of Soil Mechanics and Foundations Division, vol. 98 N. SM 8, August 1972.

GPO 847-438

ABSTRACT

Irrigation of collapsible soils densifies them near ground surface. For underground pipelines, near-surface soils that have never been irrigated and are highly collapsible should be prewetted to cause soil collapse. The wetted stabilized pad supports the pipe and resists further subsoil collapse beneath and adjacent to the pad.

The Bureau criteria for liquid limit natural dry density establishes the degree of looseness or collapsibility of the subsoils. Wetting tests were conducted on lateral 7R to determine minimal preconstruction foundation treatment for structures on collapsible soils. Fifteen test sections of 5.6-km total length were installed to compare surface flooding and sprinkling methods, with and without infiltration wells. A total of 9 m of applied irrigation water, usually hydrocompacted the upper 15 m of soil adequately for supporting pipelines and small pumping plants. Seepage and settlement rates and the time required for wetting subsoils to depths of 15 m are given. Ponding or sprinkling subsoils without wells saved water, but took 60 to 90 days to reach a 15-m depth where impervious layers did not prevent infiltration.

ABSTRACT

Irrigation of collapsible soils densifies them near ground surface. For underground pipelines, near-surface soils that have never been irrigated and are highly collapsible should be prewetted to cause soil collapse. The wetted stabilized pad supports the pipe and resists further subsoil collapse beneath and adjacent to the pad.

The Bureau criteria for liquid limit natural dry density establishes the degree of looseness or collapsibility of the subsoils. Wetting tests were conducted on lateral 7R to determine minimal preconstruction foundation treatment for structures on collapsible soils. Fifteen test sections of 5.6-km total length were installed to compare surface flooding and sprinkling methods, with and without infiltration wells. A total of 9 m of applied irrigation water, usually hydrocompacted the upper 15 m of soil adequately for supporting pipelines and small pumping plants. Seepage and settlement rates and the time required for wetting subsoils to depths of 15 m are given. Ponding or sprinkling subsoils without wells saved water, but took 60 to 90 days to reach a 15-m depth where impervious layers did not prevent infiltration.

ABSTRACT

Irrigation of collapsible soils densifies them near ground surface. For underground pipelines, near-surface soils that have never been irrigated and are highly collapsible should be prewetted to cause soil collapse. The wetted stabilized pad supports the pipe and resists further subsoil collapse beneath and adjacent to the pad.

The Bureau criteria for liquid limit natural dry density establishes the degree of looseness or collapsibility of the subsoils. Wetting tests were conducted on lateral 7R to determine minimal preconstruction foundation treatment for structures on collapsible soils. Fifteen test sections of 5.6-km total length were installed to compare surface flooding and sprinkling methods, with and without infiltration wells. A total of 9 m of applied irrigation water, usually hydrocompacted the upper 15 m of soil adequately for supporting pipelines and small pumping plants. Seepage and settlement rates and the time required for wetting subsoils to depths of 15 m are given. Ponding or sprinkling subsoils without wells saved water, but took 60 to 90 days to reach a 15-m depth where impervious layers did not prevent infiltration.

ABSTRACT

Irrigation of collapsible soils densifies them near ground surface. For underground pipelines, near-surface soils that have never been irrigated and are highly collapsible should be prewetted to cause soil collapse. The wetted stabilized pad supports the pipe and resists further subsoil collapse beneath and adjacent to the pad.

The Bureau criteria for liquid limit natural dry density establishes the degree of looseness or collapsibility of the subsoils. Wetting tests were conducted on lateral 7R to determine minimal preconstruction foundation treatment for structures on collapsible soils. Fifteen test sections of 5.6-km total length were installed to compare surface flooding and sprinkling methods, with and without infiltration wells. A total of 9 m of applied irrigation water, usually hydrocompacted the upper 15 m of soil adequately for supporting pipelines and small pumping plants. Seepage and settlement rates and the time required for wetting subsoils to depths of 15 m are given. Ponding or sprinkling subsoils without wells saved water, but took 60 to 90 days to reach a 15-m depth where impervious layers did not prevent infiltration.

GR-14-77
John P. Bara
RESEARCH ON WETTING COLLAPSIBLE FOUNDATION SOILS
Bur Reclam Rep GR-14-77, Div Gen Res, Sept 1977. Bureau of Reclamation, Denver, 19 p, 9 fig, 1 tab, 8 ref
DESCRIPTORS–/ ponding/ infiltration water wells/ pre-treatment (water)/ seepage/ surface irrigation/ soil mechanics/ subsidence/ soil engineering
IDENTIFIERS–/ Bureau of Reclamation/ California/ San Luis Canal/ collapsible soils/ wetting test methods

COSATI Field/Group: 8 m COWRR: 0813

GR-14-77
John P. Bara
RESEARCH ON WETTING COLLAPSIBLE FOUNDATION SOILS
Bur Reclam Rep GR-14-77, Div Gen Res, Sept 1977. Bureau of Reclamation, Denver, 19 p, 9 fig, 1 tab, 8 ref
DESCRIPTORS–/ ponding/ infiltration water wells/ pre-treatment (water)/ seepage/ surface irrigation/ soil mechanics/ subsidence/ soil engineering
IDENTIFIERS–/ Bureau of Reclamation/ California/ San Luis Canal/ collapsible soils/ wetting test methods

COSATI Field/Group: 8 m COWRR: 0813

GR-14-77
John P. Bara
RESEARCH ON WETTING COLLAPSIBLE FOUNDATION SOILS
Bur Reclam Rep GR-14-77, Div Gen Res, Sept 1977. Bureau of Reclamation, Denver, 19 p, 9 fig, 1 tab, 8 ref
DESCRIPTORS–/ ponding/ infiltration water wells/ pre-treatment (water)/ seepage/ surface irrigation/ soil mechanics/ subsidence/ soil engineering
IDENTIFIERS–/ Bureau of Reclamation/ California/ San Luis Canal/ collapsible soils/ wetting test methods

COSATI Field/Group: 8 m COWRR: 0813

GR-14-77
John P. Bara
RESEARCH ON WETTING COLLAPSIBLE FOUNDATION SOILS
Bur Reclam Rep GR-14-77, Div Gen Res, Sept 1977. Bureau of Reclamation, Denver, 19 p, 9 fig, 1 tab, 8 ref
DESCRIPTORS–/ ponding/ infiltration water wells/ pre-treatment (water)/ seepage/ surface irrigation/ soil mechanics/ subsidence/ soil engineering
IDENTIFIERS–/ Bureau of Reclamation/ California/ San Luis Canal/ collapsible soils/ wetting test methods

COSATI Field/Group: 8 m COWRR: 0813