GR-88-6

MODIFICATION AND USE OF A RAINHART SIEVE INSPECTION DEVICE

by

Abel A. Benavidez

Robert A. Baumgarten

Traver E. Metcalf, Jr.

Geotechnical Services Branch
Research and Laboratory Services Division
Denver Office
Denver, Colorado

June 1988

UNITED STATES DEPARTMENT OF THE INTERIOR ★ BUREAU OF RECLAMATION

ACKNOWLEDGMENTS

The authors wish to express their appreciation to the following personnel who contributed to this project: Henry Hoff for developing computer software, Randy Brammer for assembling data acquisition and computer hardware, Betsy Kunzer and Bill Baca for testing system, Bob Scavuzzo for his technical review, and Mary Ann Trujillo for her editorial and processing work.

CONTENTS

TABLES

FIGURES

INTRODUCTION

This report describes the modification of a sieve inspection device and an improved method for checking wire-cloth sieves, which are used to determine particle-size distribution of soils. This method requires the use of a Rainhart sieve inspection device, which was modified to use LVDT's (linear variable differential transformers) to measure sieve wire diameters and apertures, and an HP (Hewlett Packard) 9836 microcomputer to record and reduce the measurement data. Comparisons of the accuracy and time required to perform an inspection using both the original and modified device are presented. Data used to compare the accuracy of the original and modified device are presented in appendix D.

OBJECTIVES

Checking sieves for compliance with the standards of the ASTM (American Society for Testing and Materials) [1][1] can be tedious and time consuming; therefore, the following objectives were developed for this study:

- Improve on method and equipment for checking wire-cloth sieves
- Reduce time required to check a sieve
- Reduce time required to analyze data
- Reduce potential for error (both human and system)
- Develop a system that is easily implemented
- Develop a system that is portable

HISTORICAL BACKGROUND

Compressibility, permeability, and shear strength are all influenced by the size and distribution of the particles comprising a soil. Particle sizes and distribution are routinely determined soil parameters, and are used to classify a soil. Wire-cloth sieves are used to determine the size distribution of particles larger than the No. 200 (75-μm) sieve. Therefore, test results are dependent on the quality and uniformity of the wire cloth; that is, the dimensions of the wire diameter and apertures. Wire cloth degrades with use, and results in sieves that do not meet the ASTM E 11 standards [1].

The Bureau of Reclamation ensures the quality of its laboratory test results by requiring stringent inspections and calibrations of all test equipment. There are currently about 30 Bureau field laboratories (including satellite laboratories), and each laboratory may have as many as 200 sieves.

[1]Numbers in brackets refer to entries in the Bibliography.

Using the original sieve inspection device, about 2 hours were required to measure, record, calculate, and check the calculations for a single sieve. Because of the time-consuming nature of this operation and the stringent quality control requirements of the Bureau, the sieve-inspection device was modified. This modification is shown in the Bureau's *Earth Manual* [2].

An unmodified Rainhart device was used to check wire-cloth sieves by measuring wire diameters and apertures. The device works on the following principle: distance traveled between two points by a manually driven *X-Y* stage is measured with dial indicators, one on each axis. This is accomplished by adjusting the warp and shoot adjustment knobs shown on figure 1. The points were located by moving the sieve until the image of a crosshair (contained in a low-power, vertically mounted, monocular microscope) coincided with the edge of an individual sieve wire, backlighted by the Rainhart device. A wide range of sieve mesh sizes can be accurately measured in either the inch-pound or metric unit measurement system by selecting the appropriate dial indicator (fig. 1), with attendant sensitivity to measure at least one aperture. A rack and pinion-driven microscope support arm is moved vertically on the column to focus on the mesh.

Disadvantages of this device using the dial indicators are that the operator must continually set the crosshairs on the microscope to coincide with a wire on the sieve, read the dial indicators, and then record the values. This process is time consuming, causes eye fatigue, and has high potential for human error in reading and recording data. Also, the calculations of wire diameter and aperture dimension must be performed using hand-held calculators.

MODIFICATIONS

The standard Rainhart sieve inspection device was modified to use LVDT's instead of the dial indicators. Holding blocks that clamp to the carriage guide rails were fabricated to hold the LVDT's (fig. 2). The stage guide rails, guide rail blocks, and threaded guide blocks were replaced with parts specifically machined to reduce contact tolerance and improve the precision of the stage movements. Spring-loaded LVDT's were used to ensure that any movement of the stage, upon which the sieve was mounted, would be followed by the LVDT's. The LVDT's were selected to measure the full range of sieve openings from No. 200 to No. 4 (75 μm to 4.75 mm). The a-c current signals of the LVDT's are conditioned prior to transmission to an HP-9836 microcomputer. In addition, a digital voltmeter and the computer CRT (cathode ray tube) display are used to monitor the voltage output from the LVDT's.

A computer program was designed to receive voltage readings from each LVDT and to convert these readings to displacements using voltage-displacement calibrations stored in the microcomputer. In memory, the program maintains allowable wire diameters and aperture dimensions for

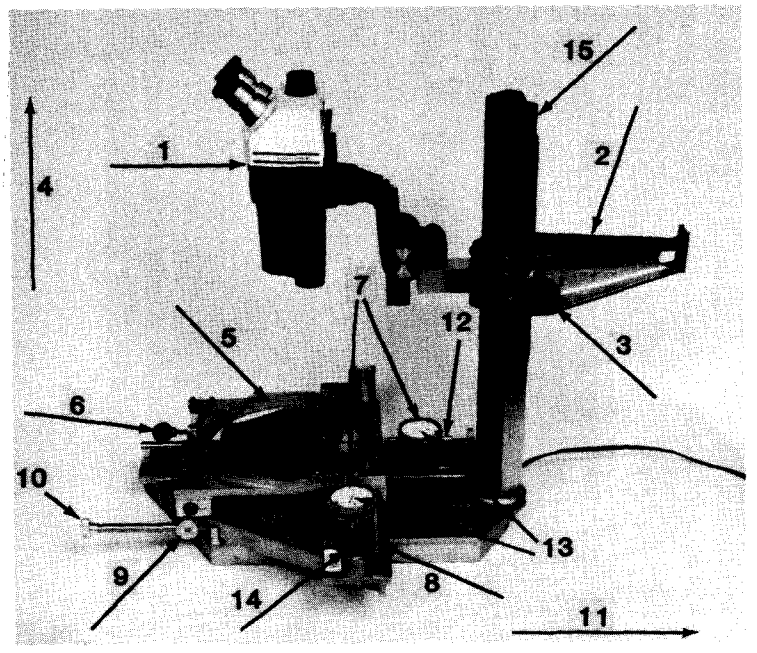

1—Monocular microscope
2—Microscope support arm
3—Microscope adjustment knob
4—Warp direction
5—Stage
6—Locking bolt
7—Bezel
8—Guide rail
9—Warp adjustment knob
10—Shoot adjustment knob
11—Shoot direction
12—Guide rail
13—Dial indicator
14—Magnetic holders
15—Column

Figure 1. – Rainhart device with dial indicators. This device is adaptable to various sieves and other linear measurement devices.

all sizes of sieves currently used in Bureau test procedures. The software operation is simple because of the menu-driven features; however, an understanding of computer data input and the computer system is helpful.

A detailed description of the modifications to the Rainhart device is presented in appendix A. Detailed descriptions of LVDT calibration procedures and the sieve checking procedure are presented in appendixes B and C, respectively.

TEST RESULTS

The No. 16 and No. 200 (1.18-mm and 75-μm) sieves were measured. A total of 100 wire diameters and 100 aperture dimensions were measured at 10 locations (sets) on each sieve using both the unmodified and modified device, and then the values were compared. The dimensions for the diameters and apertures were initially measured using the dial indicators, and the data

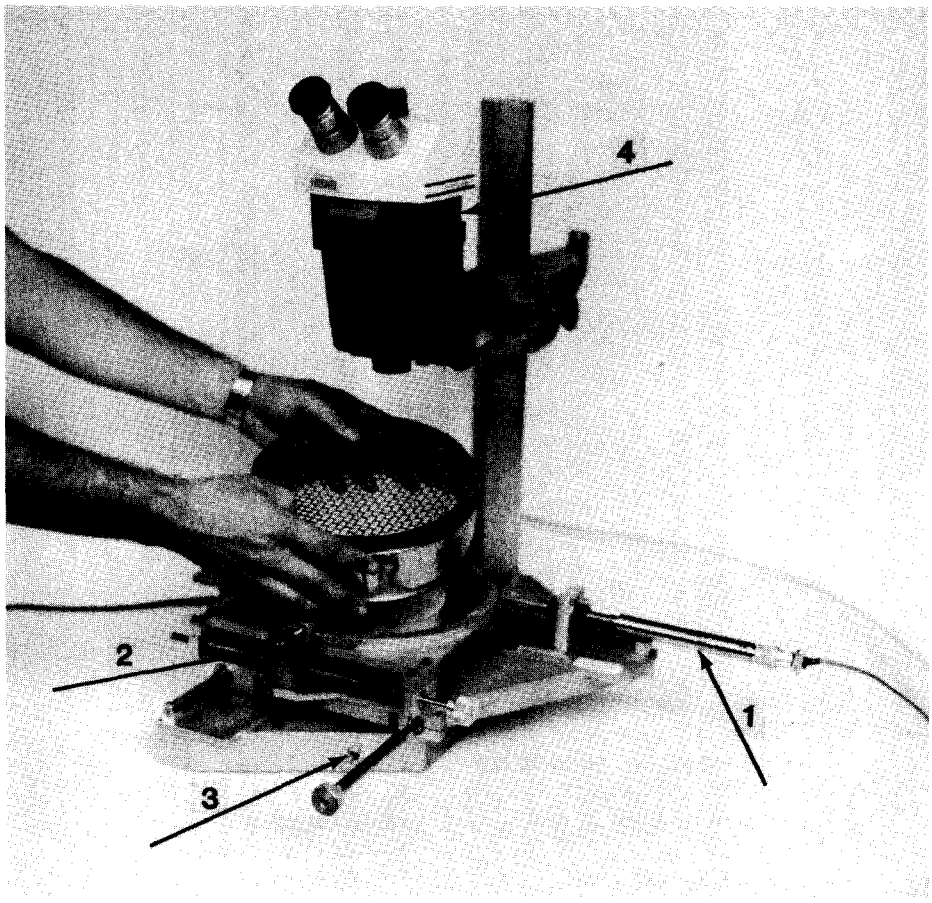

1—LVDT's
2—Locking bolt
3—Light switch
4—StereoZoom microscope

Figure 2. – Modified Rainhart device with LVDT's and StereoZoom microscope. An 8-inch (203-mm) diameter brass sieve is being placed on device for inspection.

recorded. The stage was then returned to the first wire, the LVDT's installed, and the same diameters and apertures were measured. The stage was then moved to the next set and the procedure repeated. All of these measurements are presented in appendix D, and a summary of the results is shown in table 1.

CONCLUSIONS

1. The modified device using LVDT's measures wire diameters and aperture dimensions as accurately as the dial guages, and reduces the time required for checking a sieve from 2 hours to about 10 minutes.

Table 1.—Summary of sieve measurements.

Sieve size	Average aperture, percent difference		Percent of openings greater than specified limit, percent difference	Largest opening, percent difference	Average wire diameter, percent difference	
	Direction				Direction	
	X	*Y*	Overall	Overall	*X*	*Y*
No. 16 (1.18 mm)	−0.34*	−0.76	0	2.77	0.31	0.93
No. 200 (75 μm)	0	0	0	0	2.00	2.00

*Example calculation: $\left(\frac{\text{LVDT}-\text{Dial Indicator}}{\text{LVDT}}\right)(100) = -0.34$ percent

2. The modified device eliminates the need for the operator to continually look back and forth between the microscope and the dial indicators and, therefore, reduces eye fatigue.

3. The modified device eliminates data transposition and manual calculation errors because the test data are recorded directly and calculated by the microcomputer.

4. The cost of modifying the device and developing the computer software is economically justified because of the numerous sieves calibrated annually.

BIBLIOGRAPHY

[1] *1983 Annual Book of ASTM Standards,* E 11, vol. 14.02, pp. 11-16, American Society for Testing and Materials, Philadelphia, PA, June 1983.

[2] *Earth Manual,* 3d edition, vol. 2, USBR designation 1025-89, U.S. Department of the Interior, Bureau of Reclamation, Denver Office, Denver, CO, (in preparation).

APPENDIX A

MODIFICATIONS OF RAINHART SIEVE INSPECTION DEVICE

APPENDIX A. MODIFICATIONS OF RAINHART SIEVE INSPECTION DEVICE

LVDT Schematic

Schaevitz LVDT's, model GGA-121-125 with a 0- to 0.25-inch (0- to 6.35-mm) measuring range and model GCA-121-500 with a 0- to 1-inch (0- to 25.4-mm) measuring range, with a maximum voltage range of ± 10 volts are used to measure the linear displacement. A Schaevitz-type Cas signal conditioner is used to receive and amplify the signal from the LVDT's. A schematic of the electronic components is shown on figure A-1.

LVDT Installation

The LVDT's are attached to the guide rails of the device with aluminum mounting blocks (fig. A-2).

Microscope

The monocular microscope was replaced with a StereoZoom Bausch and Lomb 1 to 7× variable power microscope to enhance optical resolution. Installation required fabrication of a support bracket that attaches to the microscope support arm, as shown on figure A-3.

Stage Guide Rails and Guide Blocks

The standard cold-rolled steel guide rails were replaced with case-hardened and ground-steel guide rails, and the aluminum guide blocks were replaced with Thompson linear ball-bearing guides. This improved the ease and precision of the stage movement.

Stage Threaded Guide Block

The aluminum-threaded guide block was replaced with a more precisely machined brass-threaded guide block, which also improved the ease and precision of the stage movement.

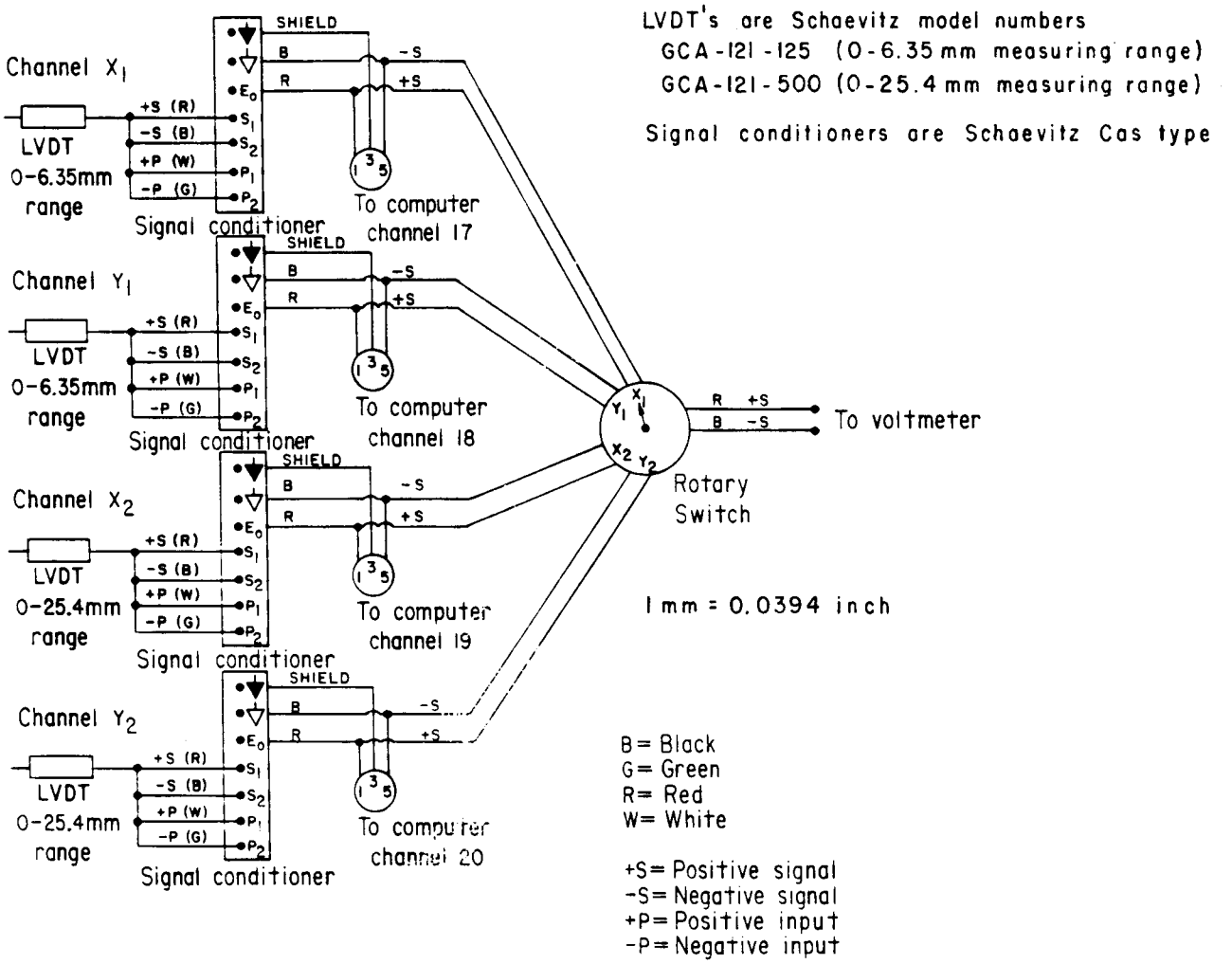

Figure A-1. – Schematic of electronic components.

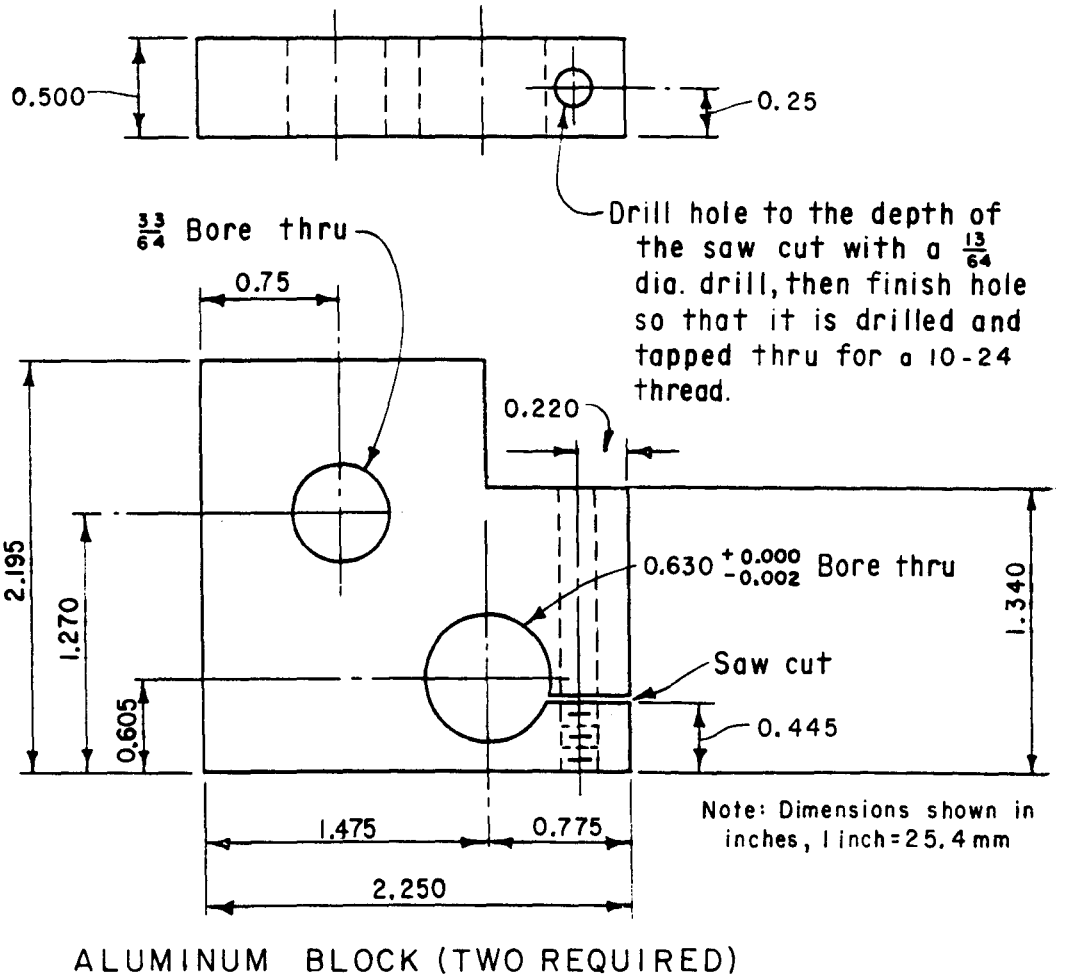

Figure A-2. – Aluminum mounting blocks for LVDT's.

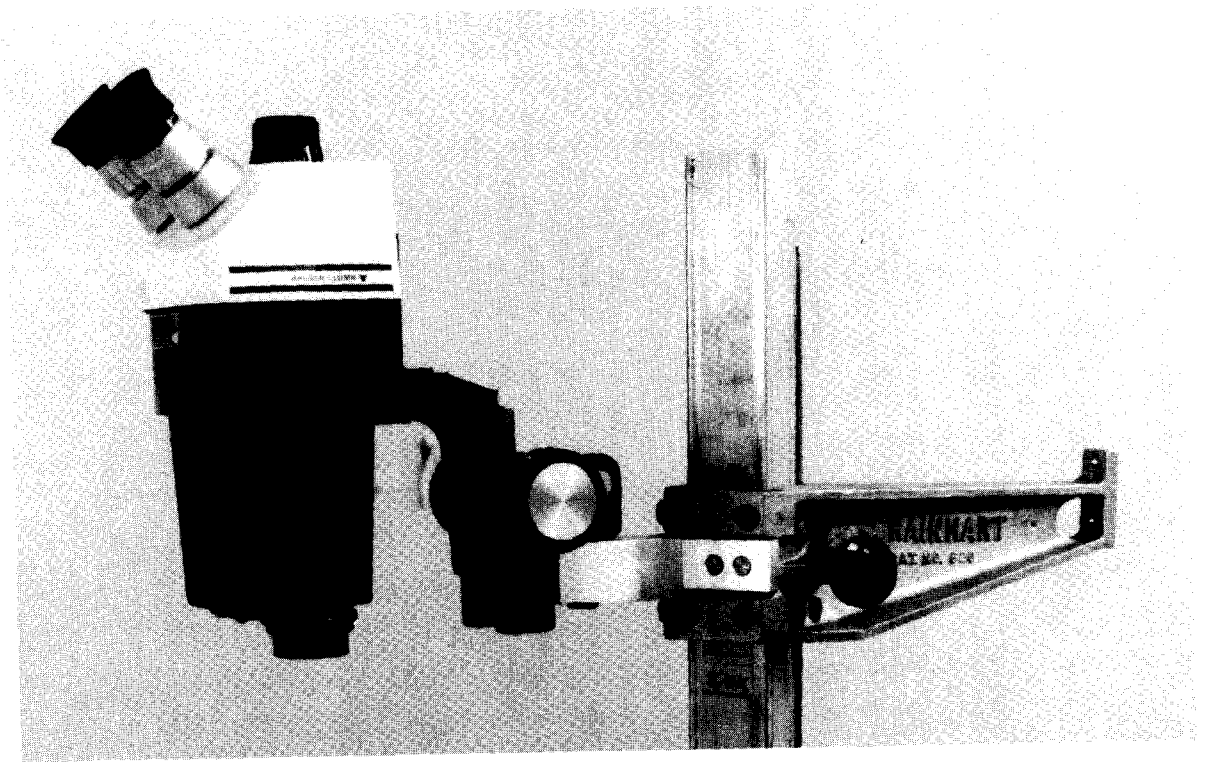

Figure A-3. – StereoZoom microscope attachments.

APPENDIX B

COMPUTER INPUT AND CALIBRATIONS

APPENDIX B. COMPUTER INPUT AND CALIBRATIONS

This appendix describes the computer input and calibrations required for inspecting wire-cloth sieves having apertures as large as a No. 4 (4.75-mm) sieve and as small as a No. 400 (38-μm) sieve using a modified Rainhart sieve inspection device equipped with LVDT's to measure linear displacements; a StereoZoom microscope to improve optical resolution; and an HP-9836 microcomputer to acquire, store, and reduce the data.

This inspection procedure follows the methodology presented in USBR 1025-89, "Checking Sieves," Method A [2]. A glossary of terms used in this procedure are:

Aperture.—The opening or hole between parallel wires in a sieve.

Interpupillary.—Located or occurring between the pupils of the eyes

Set.—A number of apertures and wire diameters measured and grouped as a set

Shoot.—Direction of travel from top to bottom, parallel to one set of wires, and perpendicular to the warp, as shown on figure B-1

Sieve.—An instrument with a rigid frame and wire cloth or perforated bottom used for separating the coarser material from the finer parts of loose matter

Stage.—The part of the inspection device that holds the sieve, and moves in the *X* (warp) and *Y* (shoot) directions

Warp.—Direction of travel across the sieve parallel to one set of wires and perpendicular to the shoot (fig. B-1)

Soft Key Menus

The computer software designed for the HP-9836 microcomputer is user friendly, and easily operated with a minimum of instruction. The code is menu driven using system soft keys, cursor selection, and queried response. The program is loaded into the computer, and the primary softkey menu is displayed:

SYS NO (#0)	INITIALIZE (#1)	SIEVE TEST (#2)	TABLE (#3)	FRONT PAGE (#4)	
READ (#5)	STATUS (#6)	LIST (#7)	EDIT (#8)	OTHER KEYS (#9)	*

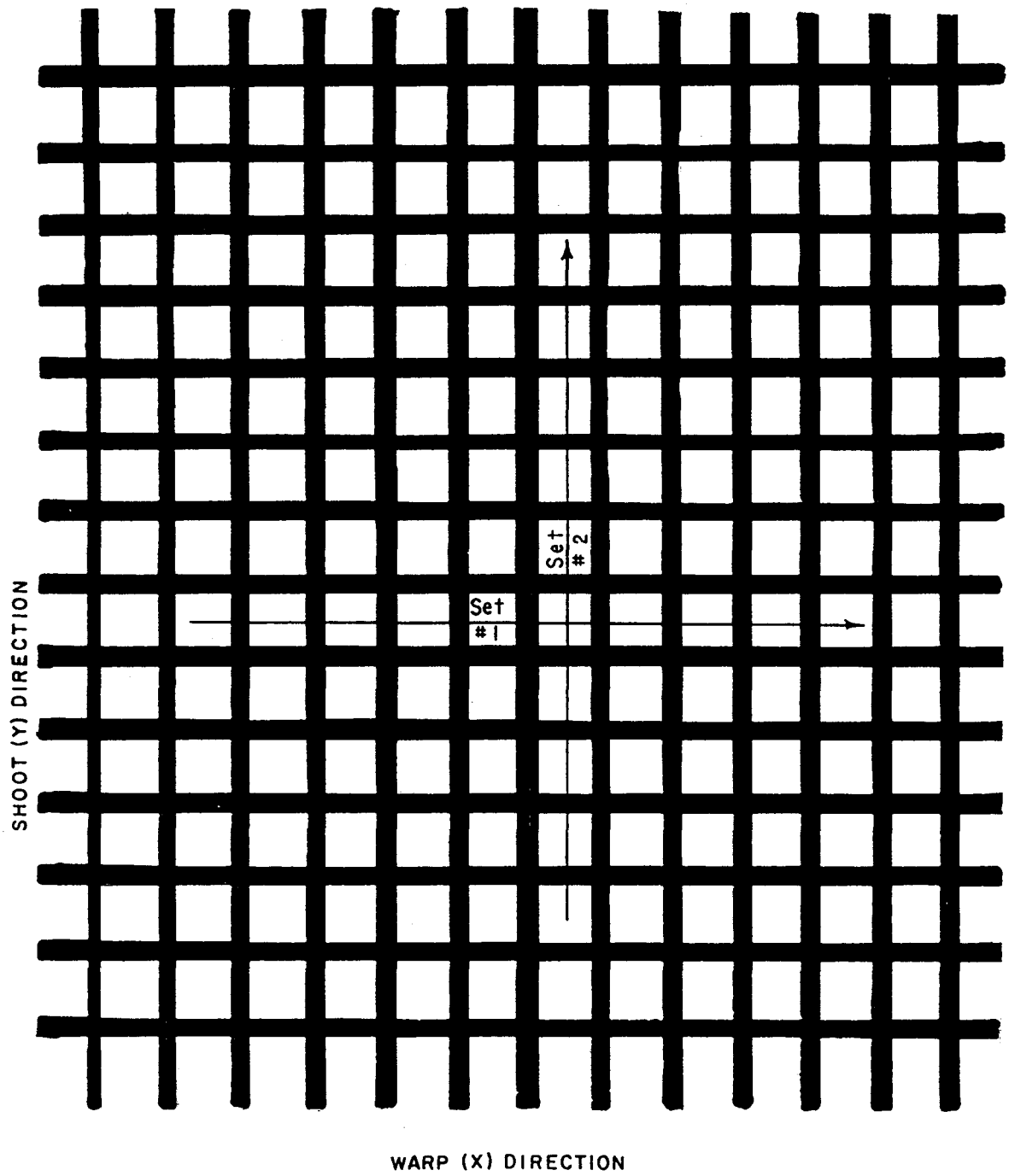

Figure B-1. – Warp and shoot directions.

Softkey No. 0.—SYS NO.: Identifies the data storage system in which test data and results for a specific test reside. The system maintains a test information format for test identification and test data. System Nos. 1 through 10 are available for sieve inspection test data.

Softkey No 1.—INITIALIZE: Initializes program and assigns a system number (1 to 10).

Softkey No. 2.—SIEVE TEST: Executes sieve inspection software.

Softkey No. 3.—TABLE: Displays or prints a summary table of data.

Softkey No. 4.—FRONT PAGE: Displays front page for system on which sieve inspection data are stored.

Softkey No. 5.—READ: Visually displays readings of LVDT output.

Softkey No. 6.—STATUS: Displays number of lines (0 to 500) of data stored under any of the 10 systems.

Softkey No. 7.—LIST: Displays data stored in any particular system. Data may be printed out with or without front page.

Softkey No. 8.—EDIT: Executes edit subroutine.

Softkey No. 9.—OTHER KEYS: Changes softkey menu from primary to secondary. The secondary softkey menu is:

SYS NO (#0)	BACKUP (#1)		TIMESET (#4)	
VOLTS (#5)	CALIBRATION (#6)	XFILE (#8)	OTHER KEYS (#9)	*

Softkey No. 0.—SYS NO.: Same as primary menu.

Softkey No. 1.—BACKUP: Recalls data from permanent storage to floppy disk.

Softkey No. 4.—TIMESET: Allows setting of time and date in computer clock.

Softkey No. 5.—VOLTS: Displays voltage output of LVDT's.

Softkey No. 6.—CALIBRATION: Executes LVDT calibration software.

Softkey No. 8.—XFILE: Executes XFILE general purpose file handler (XFILE software is a data file that has a 10-character name beginning with "X"). XFILE software executes all remote data file operations, such as storing data on or recalling data from floppy disk.

Softkey No. 9.—OTHER KEYS: Returns to primary softkey menu.

Initiate Program

Initiate the program by inserting software and data disks into the computer; turn on the computer and printer and, when system responds, verify time and date on the computer clock.

Signal Conditioner Calibration

The signal conditioning equipment must be calibrated prior to checking the sieves to ensure that the output is accurate and reliable. The signal output voltage must be compatible with the readout system. Control numbers should be put on the LVDT's, LVDT cables, and signal conditioners to ensure that they do not accidentally get switched after they have been calibrated.

Connect LVDT wiring to signal conditioner, and connect a voltmeter to the signal conditioner output (fig. A-1). Remove LVDT from mounting block, and secure LVDT in digital micrometer carrier head. Turn on signal conditioner and digital micrometer, and allow system to warm up about 30 minutes prior to use. Switch LVDT calibrator to metric measurement mode.

Turn GAIN control on signal conditioner completely counterclockwise to obtain minimum gain, and adjust zero control knob to an output of zero volts (as monitored) on voltmeter readout. Turn GAIN control clockwise about five turns to its midpoint. Move core of LVDT using digital micrometer carrier head until reading on voltmeter is zero; this establishes null position of transducer.

Displace LVDT core from its null position to full deflection in negative direction (core moving into barrel), and adjust PHASE control on signal conditioner for maximum negative voltage output. Adjust GAIN control for −10 volts output; DO NOT EXCEED −10 volts as this is maximum rated linear output of LVDT and higher outputs will result in errors.

This completes calibration of the signal conditioner. Tighten the GAIN and ZERO control shaft locking nuts to prevent accidental change of settings after adjustment.

LVDT Calibration

The LVDT is calibrated by measuring the voltage output for different known displacements. The voltage output is plotted as a function of displacement. Table B-1 shows suggested displacements for which the LVDT voltage output is recorded.

Table B-1.—Calibration data points for LVDT's.

LVDT's with a measuring range of 0 to 0.25 inch (0 to 6.35 mm)	LVDT's with a measuring range of 0 to 1 inch (0 to 25.4 mm)
0.000	0.000
0.794	3.175
1.588	6.350
2.382	9.525
3.176	12.700
3.970	15.875
4.764	19.050
5.558	22.225
6.352	25.400

NOTE: Data points shown in millimeters, 1 mm = 0.0394 inch

The software is designed such that at least six data points are required to calibrate each type of LVDT. Linear displacement of each type of LVDT is measured in a digital micrometer.

The voltage output of the LVDT's may be monitored by pressing the No. 5 secondary softkey (VOLTS) on the computer or by attaching a voltmeter to the signal conditioner panel.

Place LVDT in carrier head (DO NOT OVERTIGHTEN CARRIER HEAD). Turn micrometer head clockwise until head manually reads zero. Slide micrometer head assembly to insert LVDT core into LVDT body until −10.0 volts (as read on external voltmeter) is achieved. Then, zero the digital micrometer.

Press No. 6 secondary softkey (CALIBRATION), and respond in sequence to all questions displayed on CRT.

Enter initial reading by entering 0.000, and press CONTINUE.

Using digital micrometer, displace the LVDT core a given distance, refer to table B-1. Note that digital micrometer readout will show negative values of displacement. Enter value displayed on digital micrometer into computer, and press CONTINUE.

The CRT will display the distance that the LVDT core has been displaced and the voltage output. Displace LVDT to next given displacement as suggested in table B-1, enter digital micrometer value, and press CONTINUE.

Continue displacing LVDT core and recording voltage output throughout entire displacement range of LVDT (approximately −10.0 to +10.0 volts).

When LVDT has been displaced throughout its entire range, enter DONE on computer and press CONTINUE key. Respond to software-generated questions, and obtain a copy of calibration data and a plot of voltage versus LVDT displacement (fig. B-2).

LVDT Accuracy

The accuracy (verification) of an LVDT should be periodically verified by comparing calibrated voltage output to digital micrometer output.

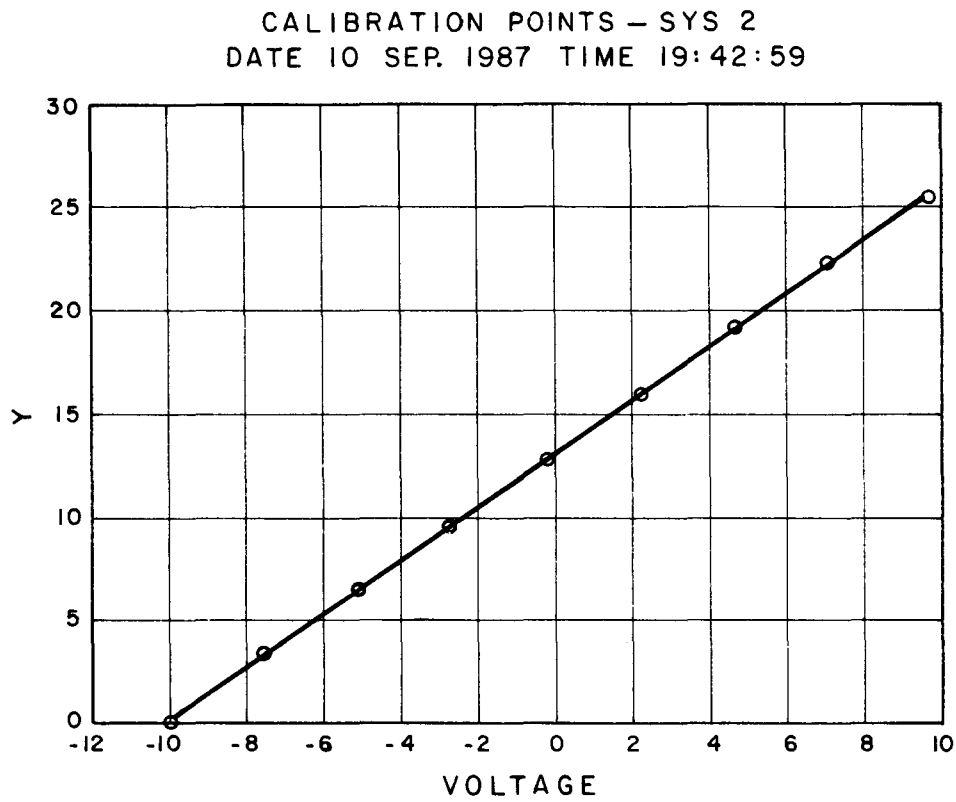

1	2-2	Y =	0.0000	voltage =	-10.041100
2	2-2	Y =	3.1759	voltage =	-7.502400
3	2-2	Y =	6.3501	voltage =	-5.049900
4	2-2	Y =	9.5250	voltage =	-2.624900
5	2-2	Y =	12.7000	voltage =	-0.208340
6	2-2	Y =	15.8750	voltage =	2.215300
7	2-2	Y =	19.0500	voltage =	4.651600
8	2-2	Y =	22.2250	voltage =	7.101400
9	2-2	Y =	25.4000	voltage =	9.614800

Figure B-2. – Calibration plot of LVDT.

Place LVDT in digital micrometer carrier head, and displace LVDT to any location in its measuring range. Zero the digital micrometer voltage output by pressing ZERO button. Press No. 5 primary softkey (READ) on computer, and display the *X* and *Y* displacements of the LVDT's, which are displayed in millimeters. Displace the LVDT core about 0.100 mm for the smaller LVDT's and about 0.500 mm for the larger LVDT's by rotating digital micrometer head. Record displacement by pressing No. 5 computer softkey (READ).

Determine the difference between the LVDT displacement readings shown on the computer CRT, and compare this difference with the displacement shown on the digital micrometer. The difference between the digital micrometer and the LVDT should be less than the manufacturer's specifications for linearity and hysteresis. If a digital micrometer is not available for checking the accuracy of the LVDT, a feeler gauge may be used (fig. B-3).

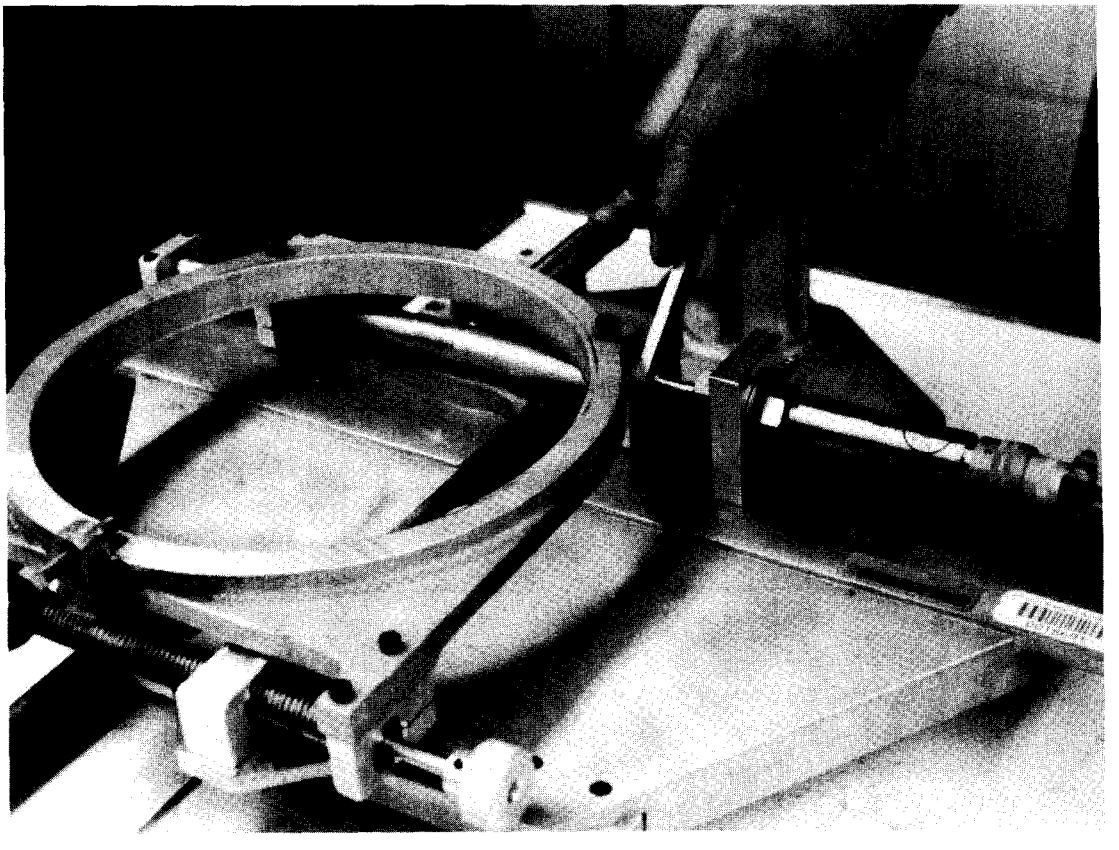

Figure B-3. – Checking LVDT accuracy with a feeler gauge.

APPENDIX C

CHECKING A SIEVE

APPENDIX C. CHECKING A SIEVE

Initialize Computer System and Data File

Initiate the program by pressing the No. 1 primary softkey (INITIALIZE). Respond to the software prompts.

When CRT displays INITIALIZE DISK TO ZERO (YES OR NO), a YES response will erase all data on file for this particular system. A NO response will add new data to any currently existing data on file for this system.

To verify number of entries (data points) in any active file currently stored on system, press the No. 6 (STATUS) key. The computer will display a table listing the number of entries stored on each system, as shown in table C-1.

Table C-1.—System status.

System No.	Reads	Delta	Control	System No.	Reads	Delta	Control
1	40			6	0		
2	0			7	0		
3	0			8	0		
4	0			9	0		
5	0			10	0		

Data File-Front Page Entry

Continue to enter data for the test by pressing the No. 4 softkey (FRONT PAGE). The "front page" of a data file contains or requires the following information:

- Allowable sieve wire diameter and aperture dimensions
- U.S. Standard sieve size number and dimensions
- Sieve identification number
- Name of person checking sieve
- Date sieve was checked

When recalling previously stored data, enter system number, XFILE name, and sieve size. The screen will then display:

SIEVE SIZE	No.	SIEVE NO.		CAL BY	DATE
0.600 mm	30	AB30		ABENAVIDEZ	05/15/87
MINIMUM	MAXIMUM	5 % >	LARGEST		
0.575	0.625	0.660	0.695		
	MINIMUM	MAXIMUM			
	0.361	0.419			

Verify and correct, as necessary, the entries for SIEVE NO., CAL BY, and DATE. Return to main menu by pressing CONTINUE key to begin checking the sieve.

Sieve Checking Procedure

Visually examine sieve, preferably with a magnifying glass, for any tears, areas of excessive wear, and/or wire displacement. If, upon completion of visual inspection, no flaws are apparent or after suitable repairs are made, proceed with checking. If rejected, the sieve shall be discarded.

Place sieve to be checked on Rainhart device as shown on figure 2. Select desired supplementary lens and magnification level on the StereoZoom microscope using the guidelines shown in table C-2.

Table C-2.—Lens selection table.

Sieve size	Lens
No. 4 through No. 30 (4.75 mm through 600 μm)	0.5×
No. 30 through No. 200 (600 through 75 μm)	No supplementary lens required[1]

[1] A 2.0× lens is available if necessary.
NOTE: The variable power (magnification) knob may be adjusted between 1 and 7× depending on individual operator.

Illuminate sieve by turning on the stage light, and set zoom knob to lowest magnification setting.

Set interpupillary distance by adjusting eyepieces from side to side such that only one full circle of light is visible.

Focus on sieve using microscope focusing knob(s).

Zoom to highest magnification; then, viewing with right eye only, refocus microscope. Zoom to lowest magnification; then, viewing with left eye only, focus left eyepiece collar until specimen is in sharp focus. Do not touch microscope focusing knob. The microscope is now ready for use.

Select the pair of LVDT's to be used for checking the sieve by using table C-3 as a guide.

Table C-3.—Sizes of LVDT's.

Sieve size	LVDT range
No. 30 (600 μm) and larger	0 to 1 inch (0 to 25.4 mm)
Smaller than No. 30 (600 μm)	0 to 0.25 inch (0 to 6.25 mm)

Mount LVDT's on the inspection device using the mounting blocks, and ensure that the LVDT marked *X* is used to measure the sieve's *X*-axis and that the LVDT marked *Y* is used to measure the sieve's *Y*-axis. Verify that selected LVDT's are wired to the electronic equipment as shown in table C-4.

Table C-4.—Wiring for LVDT's.

LVDT range	System No.	Computer receptacle No.	Direction
Small, 0.25 inch (6.25 mm)	1	17	*X*
	1	18	*Y*
Large, 0.5 inch (12.5 mm)	2	19	*X*
	2	20	*Y*

Press No. 2 primary softkey (SIEVE TEST), respond to software prompts, and press CONTINUE. At this time, the current *X*- and *Y*-axis LVDT voltages are displayed on CRT screen.

The aperture and wire diameter measurements are made in sets, with each set containing 10 aperture and 10 wire diameters. Different permissible combinations of the shoot and warp sets are shown on figure C-1. Locate a minimum of 10 sets on each sieve, 5 sets should run in the warp (*X*) direction and 5 sets in the shoot (*Y*) direction. The location of the sets should be selected to uniformly cover the entire surface of the sieve or wherever excessive wear is apparent. If there are fewer than 100 apertures in the sieve, measure all apertures. If 10 sets of 10 apertures and wires cannot be located, then randomly select 100 apertures and wire diameters (50 in the warp direction and 50 in the shoot direction) to cover representative areas of the sieve.

Align the crosshairs of the StereoZoom microscope with the wires of the sieve, see figure C-2(a). Verify that sieve is set properly in place on the stage by turning the warp adjustment knob. The warp wires should move parallel with one crosshair during movement of the stage in the warp direction. The shoot wires should move parallel with the other crosshair during movement of the stage in the shoot direction. Adjust orientation of the sieve as needed to align the wires with the crosshairs. Tighten the locking bolt located on the front of the stage as necessary to secure sieve in place. Do not overtighten this bolt because deformation of the sieve frame could result.

Set the position of the StereoZoom microscope crosshairs so they are diagonal to axis of the wire mesh, as shown on figure C-2(b).

Adjust LVDT's so that both read −8 to −10 volts. Adjust location of stage such that crosshairs coincide with center of left edge of wire (right side of aperture) running in the shoot (*Y*) direction, as shown at reading location 1 on figure C-3.

Record an initial reading (data point) by pressing space bar on the computer keyboard. The crosshair initial *X* and *Y* location is shown in millimeters on the CRT display. Subsequent readings are also recorded by pressing the space bar. Move the stage of the Rainhart device by turning warp adjustment knob until crosshairs coincide with a point directly across the wire from location 1, which is shown as reading location 2 on figure C-3. Record another reading. The CRT screen will display the new crosshair *X* and *Y* location and the calculated difference from the previous reading. These two readings constitute a wire diameter measurement.

Move the stage of the device by turning warp adjustment knob until crosshairs coincide with a point directly across the aperture from location 2, shown as location 3 on figure C-3. Record another reading by pressing space bar. The CRT screen will again display the new crosshair *X* and *Y* location and the calculated difference from the previous reading. These two readings constitute an aperture measurement. These measurements and calculations constitute the first pair of wire diameter and aperture dimensions, which is referenced on the CRT screen in column No. 2 as a "1."

Continue recording readings of wire diameter and aperture dimension until 10 wires and 9 apertures have been measured for set 1. After the 10th wire diameter has been recorded, the computer warns the operator with two "beeps" that only a single aperture reading remains to be taken. Take the final aperture reading, and press "D" on the keyboard. The CRT displays DONE, which signifies the completion of the set of *X* wire diameters and apertures.

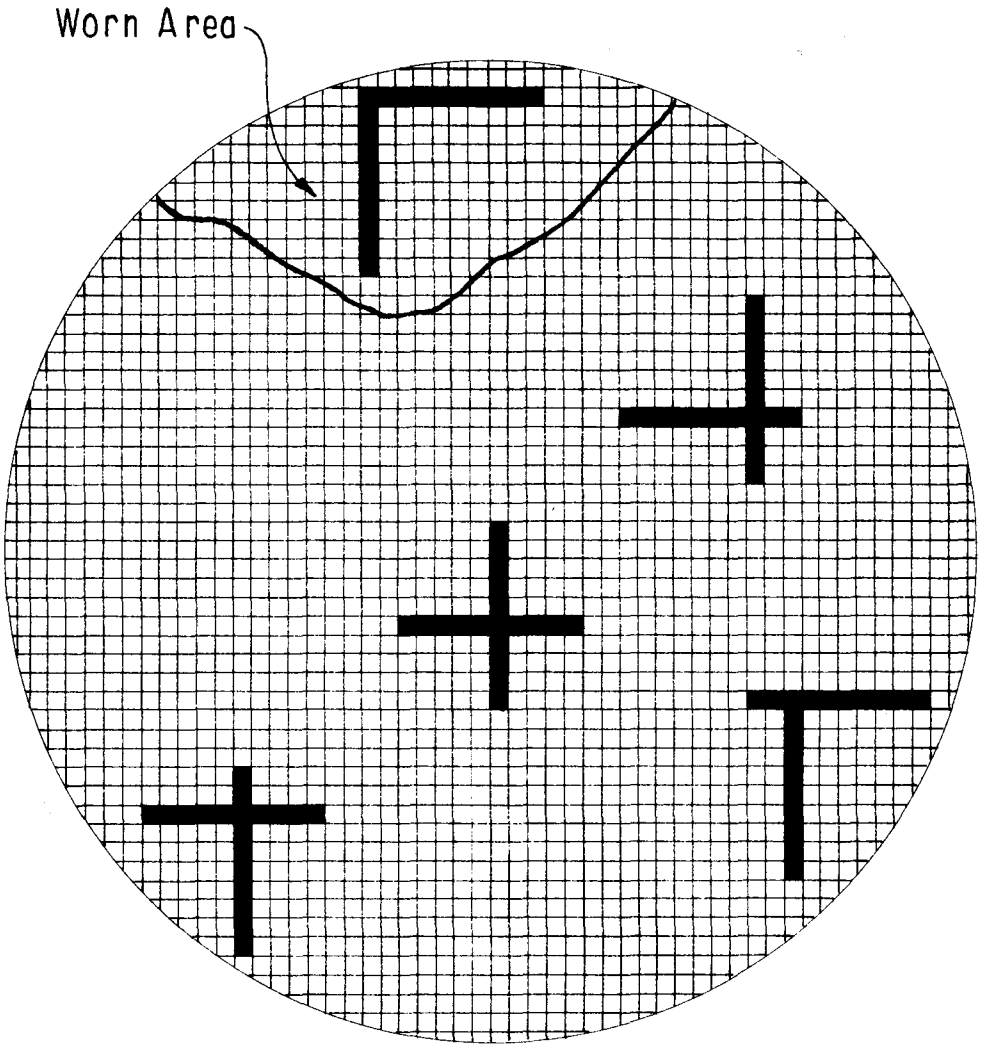

Figure C-1. – Permissible combinations of shoot and warp sets.

It may be necessary to reposition the LVDT if the length of LVDT travel is insufficient to cover the entire length of a set (10 wire diameters and 10 aperture dimensions). This repositioning is accomplished by stopping the measuring sequence at the end of an aperture dimension measurement by taking a reading (pressing space bar). Reposition LVDT in the mounting block in the direction being measured so that LVDT voltage output is between −8 and −10 volts. Record an initial reading of the repositioned LVDT, and continue recording readings across the set.

Movement of the crosshairs during measurements for each set should follow the sequence shown on figure C-3. The position of the set will vary in position on the sieve.

Adjust position of stage such that crosshairs coincide with location 22 at center of bottom edge of bottom wire (top of aperture) running in the shoot (*Y*) direction of set 2, shown as location 22 on figure C-3. Record an initial reading by pressing space bar.

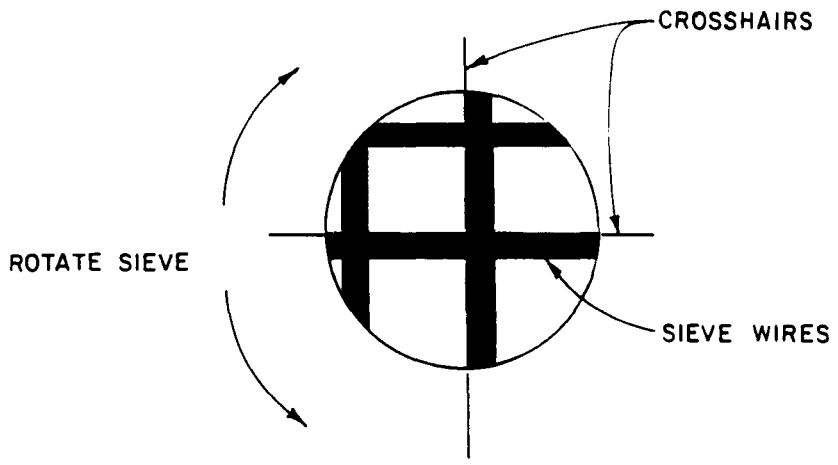

(a) Aligning sieve with the crosshairs

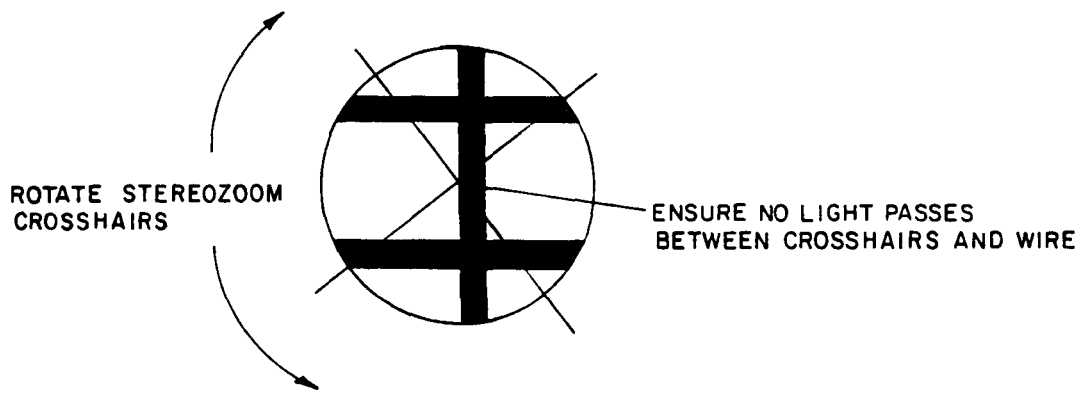

(b) Locating and aligning crosshairs for measurement

Figure C-2. – Crosshair locations.

Move the stage of the device by turning the shoot adjustment knob until crosshairs coincide with a point directly across the wire from location 22, shown as location 23 on figure C-3. Record the reading.

Move stage along shoot axis until crosshairs coincide with a point directly across the aperture from location 23, shown as location 24 on figure C-3. Record the reading.

Continue recording readings of wire diameter and aperture dimension (in *Y* direction) until 10 wire diameters and 9 apertures have been measured for set 2. The computer will then warn the operator

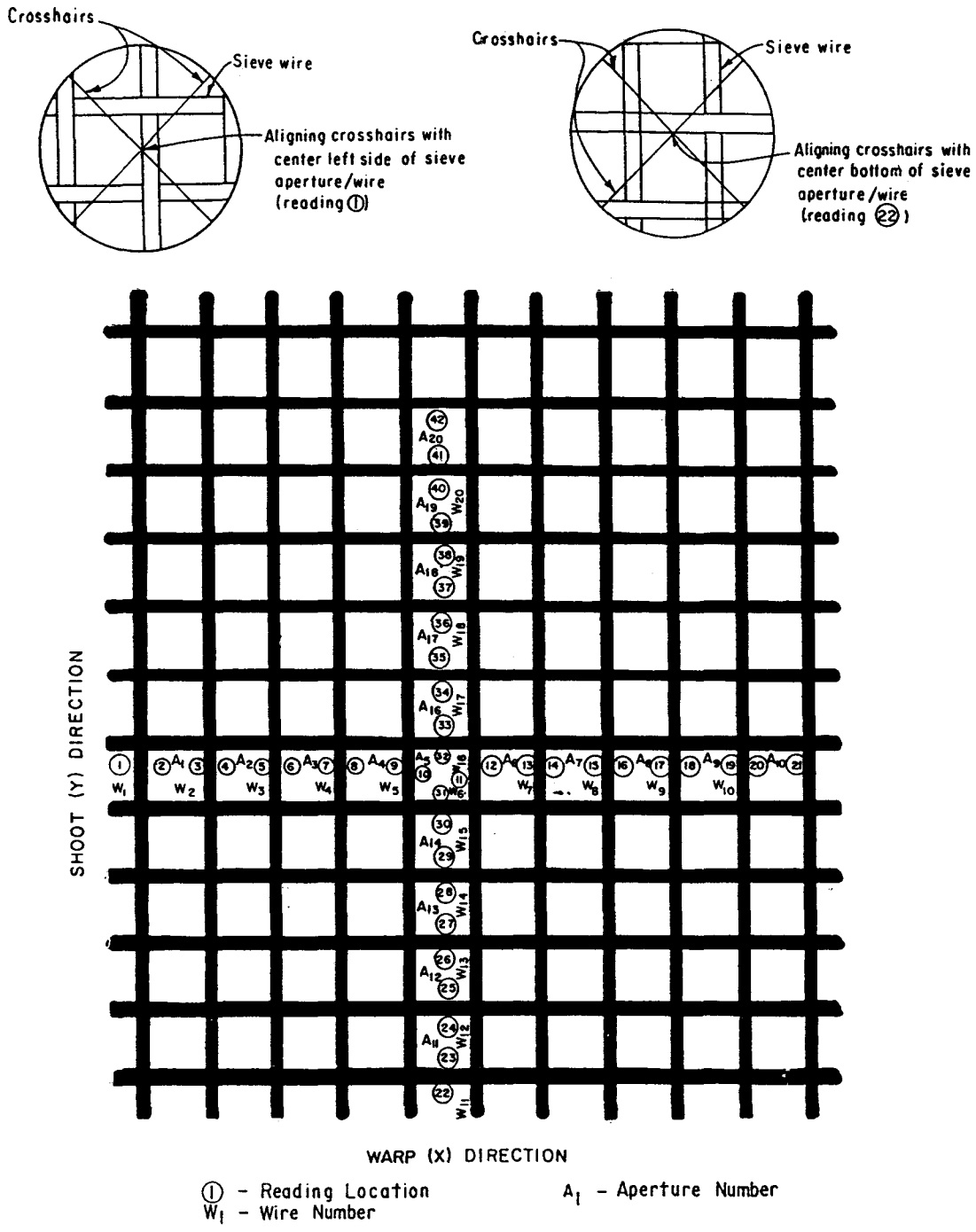

Figure C-3. – Sequence of readings.

that only one aperture reading remains to be recorded. Take the final aperture reading, and enter "D" on the keyboard. The CRT will display DONE, which signifies completion of the set of *Y* wire diameters and apertures.

Obtain a table of wire diameters and aperture dimensions by pressing No. 3 primary softkey (TABLE), respond to software prompts, and press CONTINUE.

Examine the tabulated results for average wire diameter and aperture dimension for obvious discrepancies. If tabulated averages exceed specified values, verify that data entered into the data file for the front page are correct and that LVDT is properly calibrated.

Examine results for maximum aperture dimension. If this maximum exceeds the maximum allowable aperture dimension, the sieve must be discarded; if not, continue measuring wire diameters and aperture dimensions in the shoot direction.

To continue, reinitialize the system by pressing No. 1 primary softkey (INITIALIZE). Respond to software prompts; however, when prompted, do *not* reinitialize the disk to zero as this will create a new data file rather than append future data to existing data file, and all measurements to this point would be *lost*.

Reposition the stage to the new set location on the sieve. Do not rotate or move the sieve. Continue inspecting sieves until all 10 sets of wire diameter and aperture dimensions are obtained.

Obtain a final table of the test data, and compare tabulated results with allowable limits. If results fall within prescribed limits, sieve is acceptable. If *any* of the results fall outside the prescribed limits, discard the sieve.

Methods for calculating the average wire diameter and average aperature dimension are presented in reference [2].

APPENDIX D

SIEVE INSPECTION DATA

7-2396 (1-87)
Bureau of Reclamation

CHECKING WIRE-CLOTH SIEVE

Designation USBR 1025-

PROJECT	FEATURE	LAB. LOCATION

CALIBRATION PERFORMED BY	DATE	CALIBRATION CHECKED BY	DATE
Baumgarten	4-29-87	Benavidez	4-30-87

Sieve Size #16 No. _____ inches _____ mm

Visual Inspection: [X] Accepted [ ] Rejected

Sieve Control No. A

Wire Diameter (mm)						Aperture Dimension (mm)				
Direction & Set No.	Reading No.	Initial Reading	Final Reading	Wire Diameter X	Wire Diameter Y	Reading No.	Initial Reading	Final Reading	Aperture Dimension X	Aperture Dimension Y
X/1	1	5.26	5.90	0.64			5.90	7.06	1.16	
	2	7.06	7.71	0.65			7.71	8.90	1.19	
	3	8.90	10.50	0.60			10.50	11.68	1.18	
	4	11.68	12.33	0.65			12.33	13.50	1.17	
	5	13.50	14.15	0.65			14.15	15.27	1.12	
	6	15.27	15.89	0.62			15.89	17.09	1.20	
	7	17.09	17.73	0.64			17.73	18.88	1.15	
	8	18.88	19.52	0.64			19.52	20.71	1.19	
	9	20.71	21.36	0.65			21.36	22.47	1.11	
	10	22.47	23.11	0.64			23.11	24.32	1.21	
Y/1	1	0.33	0.97		0.64		0.97	2.14		1.17
	2	2.14	2.80		0.66		2.80	3.95		1.15
	3	3.95	4.61		0.66		4.61	5.73		1.12
	4	5.73	6.39		0.66		6.39	7.56		1.17
	5	7.56	8.20		0.64		8.20	9.36		1.16
	6	9.36	10.01		0.65		10.01	11.16		1.15
	7	11.16	11.80		0.64		11.80	12.96		1.16
	8	12.96	13.60		0.64		13.60	14.75		1.15
	9	14.75	15.40		0.65		15.40	16.58		1.18
	10	16.58	17.26		0.68		17.26	18.43		1.17

	Allowable min	Allowable max	Measured X	Measured Y
Average Wire Diameter (mm)	0.618	0.618	0.636	0.640
Average Aperture (mm)	1.135	1.225	1.173	1.170
Largest Aperture (mm)	1.330		1.260	1.210
5 % of Apertures can exceed	1.270 (mm)		0.0 %	

Remarks: _____

Accepted [ ]
Rejected [ ]

SHEET 1 OF 5

7-2396 (1-87)
Bureau of Reclamation

CHECKING WIRE-CLOTH SIEVE

Designation USBR 1025-

PROJECT	FEATURE	LAB. LOCATION

CALIBRATION PERFORMED BY	DATE	CALIBRATION CHECKED BY	DATE
Baumgarten	4-29-87	Benavidez	4-30-87

Sieve Size #16 No. _____ inches _____ mm

Visual Inspection: [X] Accepted [ ] Rejected

Sieve Control No. A

Wire Diameter (mm)						Aperture Dimension (mm)				
Direction & Set No.	Reading No.	Initial Reading	Final Reading	Wire Diameter X	Wire Diameter Y	Reading No.	Initial Reading	Final Reading	Aperture Dimension X	Aperture Dimension Y
X/2	1	1.26	1.90	0.64			1.90	3.11	1.21	
	2	3.11	3.74	0.63			3.74	4.92	1.18	
	3	4.92	5.57	0.65			5.57	6.73	1.16	
	4	6.73	7.39	0.66			7.39	8.52	1.13	
	5	8.52	9.16	0.64			9.16	10.31	1.15	
	6	10.31	10.94	0.63			10.94	12.15	1.21	
	7	12.15	12.79	0.64			12.79	13.96	1.17	
	8	13.96	14.62	0.66			14.62	15.76	1.14	
	9	15.76	16.40	0.64			16.40	17.55	1.15	
	10	17.55	18.21	0.66			18.21	19.38	1.17	
Y/2	1	1.09	1.73		0.64		1.73	2.87		1.14
	2	2.87	3.52		0.65		3.52	4.67		1.15
	3	4.67	5.32		0.65		5.32	6.46		1.14
	4	6.46	7.11		0.65		7.11	8.27		1.16
	5	8.27	8.92		0.65		8.92	10.09		1.17
	6	10.09	10.73		0.64		10.73	11.90		1.17
	7	11.90	12.54		0.64		12.54	13.73		1.19
	8	13.73	14.38		0.65		14.38	15.53		1.15
	9	15.53	16.18		0.65		16.18	17.34		1.16
	10	17.34	17.99		0.65		17.99	19.16		1.17

	Allowable min	Allowable max	Measured X	Measured Y
Average Wire Diameter (mm)				
Average Aperture (mm)				
Largest Aperture (mm)				
5 % of Apertures can exceed	(mm)		%	

Remarks:

Accepted [ ]
Rejected [ ]

SHEET 2 OF 5

7-2396 (1-87)
Bureau of Reclamation

CHECKING WIRE-CLOTH SIEVE

Designation USBR 1025-

PROJECT	FEATURE	LAB. LOCATION

CALIBRATION PERFORMED BY	DATE	CALIBRATION CHECKED BY	DATE
Baumgarten	4-29-87	Benavidez	4-30-87

Sieve Size #16 No. _____ inches _____ mm

Visual Inspection: [X] Accepted [ ] Rejected

Sieve Control No. A

Wire Diameter (mm)						Aperture Dimension (mm)				
Direction & Set No.	Reading No.	Initial Reading	Final Reading	Wire Diameter X	Wire Diameter Y	Reading No.	Initial Reading	Final Reading	Aperture Dimension X	Aperture Dimension Y
X/3	1	1.16	1.78	0.62			1.78	2.95	1.17	
	2	2.95	3.60	0.65			3.60	4.78	1.18	
	3	4.78	5.42	0.64			5.42	6.60	1.18	
	4	6.60	7.21	0.61			7.21	8.35	1.14	
	5	8.35	9.99	0.64			8.99	10.18	1.19	
	6	10.18	10.82	0.64			10.82	11.99	1.17	
	7	11.99	12.63	0.64			12.63	13.82	1.19	
	8	13.82	14.45	0.63			14.45	15.64	1.19	
	9	15.64	16.26	0.62			16.26	17.41	1.15	
	10	17.41	18.04	0.63			18.04	19.26	1.22	
Y/3	1	0.15	0.79		0.64		0.79	1.96		1.17
	2	1.96	2.61		.065		2.61	3.80		1.19
	3	3.80	4.42		0.62		4.42	5.58		1.16
	4	5.58	6.22		0.64		6.22	7.40		1.18
	5	7.40	8.03		0.63		8.03	9.21		1.18
	6	9.21	9.84		0.63		9.84	11.01		1.17
	7	11.01	11.64		0.63		11.64	12.79		1.15
	8	12.79	13.44		0.65		13.44	14.59		1.15
	9	0.66	1.27		0.61		1.27	2.42		1.15
	10	2.42	3.07		0.65		3.07	4.21		1.14

	Allowable min	Allowable max	Measured X	Measured Y
Average Wire Diameter (mm)				
Average Aperture (mm)				
Largest Aperture (mm)				
5 % of Apertures can exceed	(mm)		%	

Remarks: _____

Accepted [ ]
Rejected [ ]

SHEET 3 OF 5

7-2396 (1-87)
Bureau of Reclamation

CHECKING WIRE-CLOTH SIEVE

Designation USBR 1025-

PROJECT | FEATURE | LAB. LOCATION

CALIBRATION PERFORMED BY: Baumgarten — DATE: 4-29-87

CALIBRATION CHECKED BY: Benavidez — DATE: 4-30-87

Sieve Size #16 No. _____ inches _____ mm

Visual Inspection: [X] Accepted [ ] Rejected

Sieve Control No. A

Wire Diameter (mm)						Aperture Dimension (mm)				
Direction & Set No.	Reading No.	Initial Reading	Final Reading	Wire Diameter X	Wire Diameter Y	Reading No.	Initial Reading	Final Reading	Aperture Dimension X	Aperture Dimension Y
X/4	1	1.29	1.90	0.61			1.90	3.09	1.19	
	2	3.09	3.73	0.64			3.73	4.89	1.16	
	3	4.89	5.53	0.64			5.53	6.72	1.19	
	4	6.72	7.34	0.62			7.34	8.48	1.14	
	5	8.48	9.10	0.62			9.10	10.30	1.20	
	6	10.30	10.95	0.65			10.95	12.10	1.15	
	7	12.10	12.74	0.64			12.74	13.92	1.18	
	8	13.92	14.54	0.62			14.54	15.74	1.20	
	9	15.74	16.38	0.64			16.38	17.52	1.14	
	10	17.52	18.17	0.65			18.17	19.35	1.18	
Y/4	1	0.89	1.53		0.64		1.53	2.74		1.21
	2	2.74	3.37		0.63		3.37	4.54		1.17
	3	4.54	5.19		0.65		5.19	6.35		1.16
	4	6.35	6.99		0.64		6.99	8.17		1.18
	5	8.17	8.80		0.63		8.80	9.98		1.18
	6	9.98	10.64		0.66		10.64	11.82		1.18
	7	11.82	12.44		0.62		12.44	13.63		1.19
	8	13.63	14.27		0.64		14.27	15.44		1.17
	9	15.44	16.07		0.63		16.07	17.27		1.20

	Allowable min	Allowable max	Measured X	Measured Y
Average Wire Diameter (mm)				
Average Aperture (mm)				
Largest Aperture (mm)				
5 % of Apertures can exceed	(mm)		%	

Remarks:

Accepted [ ]
Rejected [ ]

SHEET 4 OF 5

7-2396 (1-87)
Bureau of Reclamation

CHECKING WIRE-CLOTH SIEVE

Designation USBR 1025-

PROJECT	FEATURE	LAB. LOCATION

CALIBRATION PERFORMED BY	DATE	CALIBRATION CHECKED BY	DATE
Baumgarten	4-28-87	Benavidez	4-30-87

Sieve Size #16 No. _____ inches _____ mm

Visual Inspection: [X] Accepted [ ] Rejected

Sieve Control No. A

Wire Diameter (mm)						Aperture Dimension (mm)				
Direction & Set No.	Reading No.	Initial Reading	Final Reading	Wire Diameter X	Wire Diameter Y	Reading No.	Initial Reading	Final Reading	Aperture Dimension X	Aperture Dimension Y
X/5	1	8.45	9.08	0.63			9.08	10.25	1.17	
	2	10.25	10.90	0.65			10.90	12.16	1.26	
	3	12.16	12.71	0.55			12.71	13.86	1.15	
	4	13.86	14.51	0.65			14.51	15.72	1.21	
	5	15.72	16.35	0.63			16.35	17.53	1.18	
	6	17.53	18.19	0.66			18.19	19.33	1.14	
	7	19.33	19.99	0.66			19.99	21.18	1.19	
	8	21.18	21.80	0.62			21.80	22.95	1.15	
	9	22.95	23.57	0.62			23.57	24.72	1.15	
	10	24.72	25.36	0.64			3.45	4.64	1.19	
Y/5	1	1.57	2.16		0.59		2.16	3.34		1.18
	2	3.34	3.98		0.64		3.98	5.17		1.19
	3	5.17	5.80		0.63		5.80	6.96		1.16
	4	6.96	7.60		0.64		7.60	8.78		1.18
	5	8.78	9.41		0.63		9.41	10.58		1.17
	6	10.58	11.21		0.63		11.21	12.40		1.19
	7	12.40	13.04		0.64		13.04	14.22		1.18
	8	14.22	14.86		0.65		14.86	16.07		1.21
	9	16.07	16.72		0.65		16.72	17.93		1.21
	10	17.93	18.56		0.63		18.56	19.75		1.19

	Allowable min	Allowable max	Measured X	Measured Y
Average Wire Diameter (mm)				
Average Aperture (mm)				
Largest Aperture (mm)				
5 % of Apertures can exceed	(mm)		%	

Remarks:

Accepted [ ]
Rejected [ ]

SHEET 5 OF 5

7-2396 (1-87)
Bureau of Reclamation

CHECKING WIRE-CLOTH SIEVE

Designation USBR 1025-

PROJECT	FEATURE	LAB. LOCATION

CALIBRATION PERFORMED BY	DATE	CALIBRATION CHECKED BY	DATE
Baumgarten	4-28-87	Benavidez	4-30-87

Sieve Size #200 No. _____ inches _____ mm

Visual Inspection: [X] Accepted [ ] Rejected

Sieve Control No. A

Wire Diameter (mm)						Aperture Dimension (mm)				
Direction & Set No.	Reading No.	Initial Reading	Final Reading	Wire * Diameter X	Wire * Diameter Y	Reading No.	Initial Reading	Final Reading	Aperture Dimension X	Aperture Dimension Y
X/1	1	2.450	2.426	.048		1	2.426	2.387	.078	
	2	2.387	2.363	.048		2	2.363	2.322	.082	
	3	2.322	2.296	.052		3	2.296	2.257	.078	
	4	2.257	2.233	.048		4	2.233	2.195	.076	
	5	2.185	2.168	.054		5	2.168	2.130	.076	
	6	2.130	2.104	.052		6	2.104	2.068	.072	
	7	2.068	2.040	.056		7	2.040	2.000	.080	
	8	2.000	1.974	.052		8	1.974	1.937	.074	
	9	1.937	1.911	.052		9	1.911	1.871	.080	
	10	1.871	1.844	.054		10	1.844	1.809	.070	
Y/1	1	2.490	2.463		.054	1	2.463	2.424		.078
	2	2.424	2.398		.052	2	2.398	2.362		.072
	3	2.362	2.334		.056	3	2.334	2.295		.078
	4	2.295	2.269		.052	4	2.269	2.228		.082
	5	2.228	2.200		.056	5	2.200	2.158		.084
	6	2.158	2.136		.044	6	2.136	2.098		.076
	7	2.098	2.070		.054	7	2.070	2.031		.080
	8	2.031	2.006		.050	8	2.006	1.968		.076
	9	1.968	1.942		.052	9	1.942	1.898		.088
	10	1.898	1.875		.046	10	1.875	1.832		.086

	Allowable min	Allowable max	Measured X	Measured Y
Average Wire Diameter (mm)	0.0447	0.0583	0.051	0.050
Average Aperture (mm)	0.070	0.080	0.078	0.080
Largest Aperture (mm)	0.103		0.084	0.088
5 % of Apertures can exceed	0.091 (mm)		0.0 %	

Remarks: * Δ Reading × 2

Accepted [ ]
Rejected [ ]

SHEET 1 OF 5

7-2396 (1-87)
Bureau of Reclamation

CHECKING WIRE-CLOTH SIEVE

Designation USBR 1025-

PROJECT | FEATURE | LAB. LOCATION

CALIBRATION PERFORMED BY: Baumgarten — DATE: 4-28-87

CALIBRATION CHECKED BY: Benavidez — DATE: 4-30-87

Sieve Size #200 No. _____ inches _____ mm

Visual Inspection: [X] Accepted [ ] Rejected

Sieve Control No. A

Wire Diameter (mm)						Aperture Dimension (mm)				
Direction & Set No.	Reading No.	Initial Reading	Final Reading	Wire* Diameter X	Wire* Diameter Y	Reading No.	Initial Reading	Final Reading	Aperture Dimension X	Aperture Dimension Y
X/2	1	1.460	1.436	0.048			1.436	1.395	0.082	
	2	1.395	1.371	0.048			1.371	1.333	0.076	
	3	1.333	1.310	0.046			1.310	1.271	0.078	
	4	1.271	1.246	0.050			1.246	1.209	0.074	
	5	1.209	1.184	0.050			1.184	1.145	0.078	
	6	1.145	1.121	0.048			1.121	1.082	0.078	
	7	1.082	1.057	0.050			1.057	1.018	0.078	
	8	1.018	0.993	0.050			0.993	0.953	0.080	
	9	0.953	0.928	0.050			0.928	0.892	0.072	
	10	0.892	0.866	0.052			0.866	0.827	0.078	
Y/2	1	2.338	2.314		0.048		2.314	2.273		0.082
	2	2.273	2.249		0.048		2.249	2.207		0.084
	3	2.207	2.182		0.050		2.182	2.139		0.086
	4	2.139	2.114		0.050		2.114	2.076		0.076
	5	2.076	2.052		0.048		2.052	2.012		0.080
	6	2.012	1.985		0.054		1.985	1.945		0.080
	7	1.945	1.921		0.048		1.921	1.881		0.080
	8	1.881	1.852		0.058		1.852	1.813		0.078
	9	1.813	1.789		0.048		1.789	1.748		0.082
	10	1.748	1.723		0.050		1.723	1.684		0.078

	Allowable min	Allowable max	Measured X	Measured Y
Average Wire Diameter (mm)				
Average Aperture (mm)				
Largest Aperture (mm)				
5 % of Apertures can exceed	(mm)		%	

Remarks: *△ Reading × 2

Accepted [ ]
Rejected [ ]

SHEET 2 OF 5

7-2396 (1-87)
Bureau of Reclamation

CHECKING WIRE-CLOTH SIEVE

Designation USBR 1029-...

PROJECT	FEATURE	LAB. LOCATION

CALIBRATION PERFORMED BY	DATE	CALIBRATION CHECKED BY	DATE
Baumgarten	4-28-87	Benavidez	4-30-87

Sieve Size #200 No. _____ inches _____ mm

Visual Inspection: [X] Accepted [ ] Rejected

Sieve Control No. A

Wire Diameter (mm)						Aperture Dimension (mm)				
Direction & Set No.	Reading No.	Initial Reading	Final Reading	Wire Diameter * X	Wire Diameter * Y	Reading No.	Initial Reading	Final Reading	Aperture Dimension X	Aperture Dimension Y
X/3	1	1.496	1.421	0.050			1.471	1.429	0.084	
	2	1.429	1.404	0.050			1.404	1.366	0.076	
	3	1.366	1.341	0.050			1.341	1.302	0.078	
	4	1.302	1.278	0.052			1.276	1.237	0.078	
	5	1.237	1.207	0.060			1.207	1.171	0.072	
	6	1.171	1.145	0.052			1.145	1.104	0.082	
	7	1.004	0.978	0.052			0.978	0.939	0.078	
	8	0.939	0.911	0.056			0.911	0.875	0.072	
	9	0.875	0.848	0.054			0.848	0.809	0.078	
	10	0.809	0.783	0.052			0.783	0.744	0.078	
Y/3	1	2.624	2.603		0.042		2.603	2.560		0.086
	2	2.560	2.539		0.042		2.539	2.499		0.080
	3	2.499	2.474		0.050		2.474	2.433		0.082
	4	2.433	2.411		0.044		2.411	2.370		0.082
	5	2.370	2.345		0.050		2.345	2.306		0.078
	6	2.036	2.280		0.052		2.280	2.242		0.076
	7	2.242	2.216		0.052		2.216	2.178		0.076
	8	2.178	2.153		0.050		2.153	2.116		0.074
	9	2.116	2.092		0.048		2.092	2.052		0.080
	10	2.052	2.026		0.052		2.026	1.989		0.074

	Allowable min	Allowable max	Measured X	Measured Y
Average Wire Diameter (mm)				
Average Aperture (mm)				
Largest Aperture (mm)				
5 % of Apertures can exceed	(mm)		%	

Remarks: * △ Reading × 2.

Accepted [ ]
Rejected [ ]

SHEET 3 OF 5

7-2396 (1-87)
Bureau of Reclamation

CHECKING WIRE-CLOTH SIEVE

Designation USBR 1025-

PROJECT	FEATURE	LAB. LOCATION

CALIBRATION PERFORMED BY	DATE	CALIBRATION CHECKED BY	DATE
Baumgarten	4-28-87	Benavidez	4-30-87

Sieve Size #200 No. _____ inches _____ mm

Visual Inspection: [X] Accepted [ ] Rejected

Sieve Control No. A

Wire Diameter (mm)						Aperture Dimension (mm)				
Direction & Set No.	Reading No.	Initial Reading	Final Reading	Wire* Diameter X	Wire* Diameter Y	Reading No.	Initial Reading	Final Reading	Aperture Dimension X	Aperture Dimension Y
X/4	1	1.441	1.418	0.046			1.418	1.377	0.082	
	2	1.377	1.352	0.050			1.352	1.312	0.080	
	3	1.312	1.288	0.048			1.288	1.250	0.076	
	4	1.250	1.225	0.050			1.225	1.186	0.078	
	5	1.186	1.160	0.052			1.160	1.123	0.074	
	6	1.123	1.098	0.050			1.098	1.057	0.082	
	7	1.057	1.034	0.046			1.034	0.994	0.080	
	8	0.994	0.969	0.050			0.969	0.931	0.076	
	9	0.931	0.906	0.050			0.906	0.868	0.076	
	10	0.868	0.841	0.054			0.841	0.802	0.078	
Y/4	1	1.645	1.622		0.046		1.622	1.580		0.072
	2	1.580	1.559		0.054		1.559	1.518		0.082
	3	1.518	1.490		0.056		1.490	1.449		0.082
	4	1.449	1.427		0.044		1.427	1.384		0.086
	5	1.384	1.356		0.056		1.356	1.319		0.074
	6	1.319	1.292		0.054		1.292	1.252		0.080
	7	1.252	1.228		0.048		1.228	1.187		0.082
	8	1.187	1.161		0.052		1.161	1.121		0.080
	9	1.121	1.094		0.054		1.094	1.056		0.076
	10	1.056	1.031		0.050		1.031	0.989		0.084

	Allowable min	Allowable max	Measured X	Measured Y
Average Wire Diameter (mm)				
Average Aperture (mm)				
Largest Aperture (mm)				
5 % of Apertures can exceed	(mm)		%	

Remarks: * △ Reading × 2

Accepted [ ]
Rejected [ ]

SHEET 4 OF 5

7-2396 (1-87)
Bureau of Reclamation

CHECKING WIRE-CLOTH SIEVE

Designation USBR 1025- _ _

PROJECT	FEATURE	LAB. LOCATION

CALIBRATION PERFORMED BY	DATE	CALIBRATION CHECKED BY	DATE
Baumgarten	4-29-87	Benavidez	4-30-87

Sieve Size #200 No. _____ inches _____ mm

Visual Inspection: [X] Accepted [ ] Rejected

Sieve Control No. A

Wire Diameter (mm)						Aperture Dimension (mm)				
Direction & Set No.	Reading No.	Initial Reading	Final Reading	Wire * Diameter X	Wire * Diameter Y	Reading No.	Initial Reading	Final Reading	Aperture Dimension X	Aperture Dimension Y
X/5	1	1.278	1.254	0.048			1.254	1.214	0.080	
	2	1.214	1.190	0.048			1.190	1.150	0.080	
	3	1.150	1.123	0.054			1.123	1.081	0.084	
	4	1.081	1.057	0.048			1.057	1.016	0.082	
	5	1.016	0.991	0.050			0.991	0.952	0.078	
	6	0.952	0.926	0.052			0.926	0.889	0.074	
	7	0.889	0.862	0.054			0.862	0.821	0.082	
	8	0.821	0.797	0.048			0.797	0.757	0.080	
	9	0.757	0.730	0.054			0.730	0.692	0.076	
	10	0.692	0.666	0.052			0.666	0.627	0.078	
Y/5	1	2.119	2.096		0.046		2.096	2.059		0.074
	2	2.059	2.036		0.054		2.032	1.990		0.084
	3	1.990	1.965		0.050		1.965	1.927		0.076
	4	1.927	1.903		0.048		1.903	1.860		0.086
	5	1.860	1.835		0.050		1.835	1.793		0.084
	6	1.793	1.773		0.040		1.773	1.732		0.082
	7	1.732	1.704		0.056		1.704	1.669		0.070
	8	1.669	1.640		0.058		1.640	1.603		0.074
	9	1.603	1.577		0.052		1.577	1.539		0.076
	10	1.539	1.514		0.050		1.514	1.475		0.078

	Allowable min	Allowable max	Measured X	Measured Y
Average Wire Diameter (mm)				
Average Aperture (mm)				
Largest Aperture (mm)				
5 % of Apertures can exceed	(mm)		%	

Remarks: * △ Reading × 2

Accepted [ ]
Rejected [ ]

SHEET 5 OF 5

SET DATA

AUTOMATED METHOD OF CHECKING WIRE-CLOTH SIEVES - DATA SHEET 1

SIEVE SIZE 1.18	(NO.) 16	SIEVE NO. C-40			CAL BY A B	DATE 8-28-87
LIMIT MIN 1.135	LIMIT MAX 1.225	5% MAX 1.27	LARGEST 1.33			
	DIA MIN 0.618	DIA MAX 0.683				

SET 1

X mm	Y mm	SYS/LINE	
24.282	10.750	1	1
23.650	10.753	1	2
22.488	10.753	1	3
21.848	10.752	1	4
20.657	10.751	1	5
20.004	10.752	1	6
18.878	10.752	1	7
18.227	10.752	1	8
17.063	10.753	1	9
16.413	10.753	1	10
15.287	10.752	1	11
14.665	10.750	1	12
13.466	10.749	1	13
12.830	10.749	1	14
11.690	10.749	1	15
11.054	10.749	1	16
9.875	10.749	1	17
9.227	10.749	1	18
8.118	10.748	1	19
7.482	10.749	1	20
6.280	10.749	1	21

SET 2

X mm	Y mm	SYS/LINE	
14.216	24.772	1	22
14.218	24.117	1	23
14.219	22.946	1	24
14.217	22.291	1	25
14.217	21.135	1	26
14.216	20.470	1	27
14.217	19.336	1	28
14.217	18.673	1	29
14.217	17.507	1	30
14.218	16.858	1	31
14.217	15.690	1	32
14.218	15.038	1	33
14.218	13.869	1	34
14.219	13.227	1	35
14.219	12.056	1	36
14.217	11.403	1	37
14.216	10.235	1	38
14.215	9.586	1	39
14.220	8.390	1	40
14.223	7.740	1	41
14.229	6.568	1	42

SET 3

X mm	Y mm	SYS/LINE	
21.834	12.088	1	43
21.205	12.088	1	44
19.990	12.088	1	45
19.360	12.089	1	46
18.178	12.089	1	47
17.534	12.088	1	48
16.372	12.088	1	49
15.717	12.089	1	50
14.592	12.088	1	51
13.947	12.089	1	52
12.798	12.088	1	53
12.164	12.086	1	54
10.956	12.088	1	55
10.316	12.088	1	56
9.143	12.088	1	57
8.483	12.089	1	58
7.346	12.088	1	59
6.705	12.089	1	60
5.554	12.089	1	61
4.891	12.089	1	62
3.720	12.088	1	63

SET 4

X mm	Y mm	SYS/LINE	
13.408	20.664	1	64
13.408	20.025	1	65
13.408	18.870	1	66
13.409	18.220	1	67
13.409	17.058	1	68
13.410	16.406	1	69
13.411	15.248	1	70
13.412	14.598	1	71
13.414	13.421	1	72
13.414	12.763	1	73
13.414	11.573	1	74
13.413	10.926	1	75
13.415	9.744	1	76
13.415	9.093	1	77
13.415	7.891	1	78
13.415	7.232	1	79
13.416	6.072	1	80
13.417	5.425	1	81
13.449	4.260	1	82

SET 5

X mm	Y mm	SYS/LINE	
22.297	14.471	1	83
21.685	14.470	1	84
20.519	14.471	1	85
19.878	14.469	1	86
18.700	14.471	1	87
18.053	14.469	1	88
16.888	14.471	1	89
16.272	14.471	1	90
15.136	14.472	1	91
14.496	14.471	1	92
13.304	14.470	1	93
12.672	14.471	1	94
11.498	14.471	1	95
10.854	14.471	1	96
9.662	14.470	1	97
9.033	14.471	1	98
7.848	14.471	1	99
7.225	14.470	1	100
6.078	14.469	1	101
5.451	14.469	1	102
4.225	14.469	1	103

SET 6

X mm	Y mm	SYS/LINE	
12.050	22.974	1	104
12.053	22.337	1	105
12.054	21.162	1	106
12.054	20.505	1	107
12.054	19.315	1	108
12.053	18.681	1	109
12.054	17.515	1	110
12.055	16.876	1	111
12.055	15.689	1	112
12.055	15.054	1	113
12.058	13.862	1	114
12.056	13.222	1	115
12.057	12.037	1	116
12.055	11.402	1	117
12.057	10.241	1	118
12.057	9.582	1	119
12.057	8.411	1	120
12.031	7.774	1	121
12.031	6.604	1	122
12.032	5.955	1	123
12.033	4.809	1	124

SET 7

X mm	Y mm	SYS/LINE	
22.153	13.285	1	125
21.547	13.286	1	126
20.354	13.284	1	127
19.718	13.285	1	128
18.557	13.285	1	129
17.917	13.284	1	130
16.736	13.285	1	131
16.114	13.285	1	132
14.975	13.285	1	133
14.357	13.285	1	134
13.154	13.286	1	135
12.508	13.286	1	136
11.356	13.285	1	137
10.715	13.285	1	138
9.539	13.286	1	139
8.911	13.285	1	140
7.713	13.286	1	141
7.074	13.286	1	142
5.933	13.286	1	143
5.289	13.284	1	144
4.101	13.286	1	145

SET 8

X mm	Y mm	SYS/LINE	
4.562	20.130	1	146
4.563	19.489	1	147
4.564	18.272	1	148
4.563	17.633	1	149
4.565	16.449	1	150
4.565	15.802	1	151
4.566	14.637	1	152
4.564	13.977	1	153
4.564	12.792	1	154
4.563	12.152	1	155
4.567	10.961	1	156
4.567	10.298	1	157
4.568	9.106	1	158
4.567	8.469	1	159
4.565	7.273	1	160
4.568	6.628	1	161
4.568	5.461	1	162
4.567	4.827	1	163
4.567	3.621	1	164

X mm	Y mm	SYS/LINE	

SET 9

23.778	14.187	1	165
23.142	14.213	1	166
21.983	14.213	1	167
21.340	14.214	1	168
20.181	14.213	1	169
19.533	14.212	1	170
18.379	14.211	1	171
17.731	14.213	1	172
16.526	14.212	1	173
15.981	14.212	1	174
14.719	14.213	1	175
14.062	14.211	1	176
12.911	14.212	1	177
12.256	14.211	1	178
11.069	14.214	1	179
10.438	14.214	1	180
9.298	14.210	1	181
8.680	14.214	1	182
7.527	14.212	1	183
6.887	14.212	1	184
5.679	14.211	1	185

SET 10

6.259	20.975	1	186
6.263	20.330	1	187
6.262	19.147	1	188
6.261	18.499	1	189
6.262	17.308	1	190
6.263	16.674	1	191
6.263	15.793	1	192
6.262	14.866	1	193
6.262	13.671	1	194
6.261	13.033	1	195
6.263	11.847	1	196
6.265	11.201	1	197
6.266	10.009	1	198
6.266	9.355	1	199
6.266	8.168	1	200
6.266	7.527	1	201
6.267	6.304	1	202
6.267	5.664	1	203
6.265	4.443	1	204
6.266	3.823	1	205
6.267	2.634	1	206

GEOTECHNICAL BRANCH - SIEVE CALIBRATION

SIEVE SIZE	1.18 (No. 16)
SIEVE NO.	C-40
BY	A B
DATE	8-28-87

OPENING READINGS			OPENING READINGS		
NO.	HORIZ (mm)	VERT (mm)	NO.	HORIZ (mm)	VERT (mm)
1	1.162	1.171	25	1.192	1.185
2	1.191	1.156	26	1.174	1.161
3	1.126	1.134	27	1.192	1.171
4	1.164	1.166	28	1.185	1.170
5	1.126	1.168	29	1.147	1.146
6	1.199	1.169	30	1.226	1.217
7	1.140	1.171	31	1.193	1.184
8	1.179	1.168	32	1.161	1.165
9	1.109	1.196	33	1.181	1.185
10	1.202	1.172	34	1.139	1.191
11	1.215	1.155	35	1.203	1.192
12	1.182	1.162	36	1.152	1.196
13	1.162	1.158	37	1.176	1.167
14	1.125	1.177	38	1.198	1.206
15	1.149	1.190	39	1.141	1.183
16	1.208	1.182	40	1.188	1.191
17	1.173	1.202	41	1.159	.881
18	1.137	1.160	42	1.159	1.195
19	1.151	1.165	43	1.154	1.186
20	1.171	1.175	44	1.205	1.192
21	1.166	1.190	45	1.262	1.187
22	1.178	1.166	46	1.151	1.223
23	1.165	1.187	47	1.187	1.221
24	1.136	1.192	48	1.140	1.189

Average actual horizontal opening (limits are 1.135 to 1.225 mm)	=	1.170
Average actual vertical opening (limits are 1.135 to 1.225 mm)	=	1.173
Percent openings greater than 1.27 mm (limit 5 percent maximum)	=	0.000
Largest actual opening (limit = 1.33 mm)	=	1.262

WIRE DIAMETER READINGS			WIRE DIAMETER READINGS		
NO.	HORIZ (mm)	VERT (mm)	NO.	HORIZ (mm)	VERT (mm)
1	0.632	0.655	25	0.640	0.640
2	.640	.655	26	.632	.635
3	.653	.665	27	.644	.659
4	.651	.663	28	.629	.637
5	.650	.649	29	.623	.649
6	.622	.652	30	.627	.641
7	.636	.642	31	.606	.639
8	.636	.653	32	.636	.647
9	.648	.649	33	.640	.660
10	.636	.650	34	.622	.640
11	.629	.639	35	.618	.663
12	.630	.650	36	.646	.637
13	.644	.652	37	.641	.645
14	.655	.650	38	.628	.634
15	.645	.658	39	.639	.645
16	.634	.647	40	.644	.648
17	.640	.651	41	.636	.634
18	.660	.659	42	.643	.927
19	.641	.647	43	.648	.638
20	.663	.637	44	.648	.646
21	.612	.657	45	.545	.654
22	.641	.634	46	.657	.641
23	.647	.639	47	.655	.640
24	.616	.635	48	.631	.620

Average actual diameter horizontal
(limits are 0.618 to 0.683 mm) = 0.636
Average actual diameter vertical
(limits are 0.618 to 0.683 mm) = 0.652

SET DATA

AUTOMATED METHOD OF CHECKING WIRE-CLOTH SIEVES - DATA SHEET 1

SIEVE SIZE 0.075	(NO.) 200	SIEVE NO. C-16			CAL BY A B	DATE 8-28-87
LIMIT MIN 0.07	LIMIT MAX 0.08	5% MAX 0.91	LARGEST 0.103			
	DIA MIN 0.0447	DIA MAX 0.0583				

SET 1

X mm	Y mm	SYS/LINE	
5.512	6.048	2	1
5.464	6.048	2	2
5.384	6.048	2	3
5.335	6.049	2	4
5.253	6.049	2	5
5.202	6.049	2	6
5.125	6.049	2	7
5.077	6.049	2	8
5.000	6.049	2	9
4.945	6.050	2	10
4.871	6.051	2	11
4.820	6.051	2	12
4.747	6.052	2	13
4.690	6.052	2	14
4.612	6.051	2	15
4.558	6.049	2	16
4.482	6.049	2	17
4.432	6.049	2	18
4.353	6.049	2	19
4.299	6.049	2	20
4.227	6.050	2	21

SET 2

X mm	Y mm	SYS/LINE	
4.911	5.750	2	22
4.912	5.697	2	23
4.913	5.618	2	24
4.912	5.565	2	25
4.911	5.493	2	26
4.913	5.437	2	27
4.913	5.358	2	28
4.913	5.305	2	29
4.913	5.223	2	30
4.912	5.169	2	31
4.912	5.084	2	32
4.911	5.037	2	33
4.913	4.959	2	34
4.912	4.904	2	35
4.913	4.825	2	36
4.913	4.775	2	37
4.913	4.695	2	38
4.913	4.644	2	39
4.914	4.556	2	40
4.914	4.508	2	41
4.913	4.423	2	42

SET 3

X mm	Y mm	SYS/LINE	
5.228	3.368	2	43
5.179	3.370	2	44
5.098	3.370	2	45
5.050	3.368	2	46
4.975	3.369	2	47
4.927	3.366	2	48
4.849	3.367	2	49
4.799	3.366	2	50
4.727	3.365	2	51
4.675	3.366	2	52
4.599	3.366	2	53
4.550	3.366	2	54
4.472	3.366	2	55
4.422	3.365	2	56
4.345	3.365	2	57
4.294	3.367	2	58
4.214	3.366	2	59
4.164	3.365	2	60
4.091	3.365	2	61
4.039	3.365	2	62
3.961	3.364	2	63

SET 4

X mm	Y mm	SYS/LINE	
4.518	6.041	2	64
4.519	5.994	2	65
4.519	5.911	2	66
4.519	5.863	2	67
4.519	5.781	2	68
4.518	5.730	2	69
4.517	5.646	2	70
4.518	5.596	2	71
4.518	5.519	2	72
4.520	5.473	2	73
4.519	5.392	2	74
4.519	5.336	2	75
4.519	5.260	2	76
4.519	5.212	2	77
4.520	5.130	2	78
4.519	5.074	2	79
4.518	4.995	2	80
4.519	4.946	2	81
4.519	4.866	2	82
4.519	4.815	2	83
4.519	4.735	2	84

X mm	Y mm	SYS/LINE	
SET 5			
5.097	6.072	2	85
5.045	6.072	2	86
4.962	6.072	2	87
4.912	6.071	2	88
4.835	6.072	2	89
4.787	6.071	2	90
4.709	6.072	2	91
4.657	6.072	2	92
4.578	6.071	2	93
4.520	6.071	2	94
4.447	6.072	2	95
4.396	6.072	2	96
4.313	6.071	2	97
4.262	6.072	2	98
4.182	6.073	2	99
4.126	6.074	2	100
4.054	6.073	2	101
4.002	6.074	2	102
3.923	6.074	2	103
3.870	6.073	2	104
3.793	6.073	2	105
SET 6			
4.357	6.413	2	106
4.357	6.372	2	107
4.359	6.286	2	108
4.358	6.244	2	109
4.358	6.164	2	110
4.358	6.114	2	111
4.357	6.031	2	112
4.357	5.988	2	113
4.357	5.905	2	114
4.356	5.857	2	115
4.358	5.781	2	116
4.357	5.727	2	117
4.357	5.653	2	118
4.356	5.600	2	119
4.356	5.524	2	120
4.358	5.475	2	121
4.357	5.401	2	122
4.356	5.352	2	123
4.357	5.273	2	124
4.356	5.221	2	125
4.357	5.148	2	126

X mm	Y mm	SYS/LINE	
SET 7			
5.187	3.779	2	127
5.140	3.778	2	128
5.059	3.777	2	129
5.010	3.778	2	130
4.929	3.776	2	131
4.882	3.777	2	132
4.805	3.775	2	133
4.756	3.776	2	134
4.678	3.776	2	135
4.627	3.776	2	136
4.551	3.776	2	137
4.501	3.778	2	138
4.421	3.776	2	139
4.375	3.777	2	140
4.294	3.776	2	141
4.245	3.777	2	142
4.168	3.776	2	143
4.116	3.777	2	144
4.041	3.776	2	145
3.988	3.777	2	146
3.909	3.777	2	147
SET 8			
4.626	4.667	2	148
4.627	4.622	2	149
4.628	4.547	2	150
4.627	4.493	2	151
4.628	4.409	2	152
4.627	4.355	2	153
4.627	4.273	2	154
4.628	4.229	2	155
4.627	4.142	2	156
4.626	4.087	2	157
4.593	4.012	2	158
4.593	3.958	2	159
4.594	3.880	2	160
4.594	3.830	2	161
4.594	3.749	2	162
4.594	3.695	2	163
4.594	3.617	2	164
4.594	3.562	2	165
4.594	3.486	2	166
4.594	3.435	2	167
4.594	3.352	2	168

X mm	Y mm	SYS/LINE	

SET 9

4.862	4.110	2	169
4.812	4.111	2	170
4.733	4.112	2	171
4.685	4.113	2	172
4.604	4.113	2	173
4.552	4.113	2	174
4.468	4.112	2	175
4.419	4.113	2	176
4.339	4.114	2	177
4.287	4.114	2	178
4.210	4.114	2	179
4.157	4.113	2	180
4.082	4.113	2	181
4.029	4.114	2	182
3.948	4.113	2	183
3.898	4.133	2	184
3.819	4.114	2	185
3.766	4.113	2	186
3.688	4.113	2	187
3.636	4.113	2	188
3.559	4.114	2	189

SET 10

4.259	5.606	2	190
4.260	5.561	2	191
4.260	5.487	2	192
4.259	5.431	2	193
4.258	5.348	2	194
4.257	5.298	2	195
4.260	5.222	2	196
4.259	5.175	2	197
4.260	5.087	2	198
4.258	5.039	2	199
4.258	4.954	2	200
4.259	4.913	2	201
4.259	4.832	2	202
4.258	4.776	2	203
4.259	4.704	2	204
4.258	4.646	2	205
4.259	4.572	2	206
4.258	4.519	2	207
4.258	4.443	2	208
4.258	4.393	2	209
4.258	4.313	2	210

GEOTECHNICAL BRANCH - SIEVE CALIBRATION

SIEVE SIZE	0.075 (No. 200)
SIEVE NO.	C-16
BY	A B
DATE	8-28-87

OPENING READINGS			OPENING READINGS		
NO.	HORIZ (mm)	VERT (mm)	NO.	HORIZ (mm)	VERT (mm)
1	0.080	0.079	26	0.083	0.074
2	.082	.072	27	.080	.076
3	.077	.079	28	.072	.074
4	.077	.082	29	.079	.079
5	.074	.085	30	.077	.073
6	.073	.078	31	.081	.075
7	.078	.079	32	.081	.084
8	.076	.080	33	.077	.082
9	.079	.088	34	.078	.087
10	.072	.085	35	.076	.075
11	.081	.083	36	.080	.078
12	.075	.082	37	.081	.081
13	.078	.084	38	.077	.078
14	.072	.077	39	.075	.076
15	.076	.081	40	.079	.083
16	.078	.076	41	.079	.074
17	.077	.082	42	.081	.083
18	.080	.079	43	.084	.076
19	.073	.080	44	.080	.088
20	.078	.080	45	.077	.085
21	.083	.086	46	.075	.081
22	.077	.080	47	.081	.072
23	.078	.083	48	.079	.074
24	.079	.083	49	.078	.076
25	.073	.076	50	.077	.080

Average actual horizontal opening (limits are 0.07 to 0.08 mm)	=	0.078
Average actual vertical opening (limits are 0.07 to 0.08 mm)	=	0.080
Percent openings greater than 0.91 mm (limit 5 percent maximum)	=	0.000
Largest actual opening (limit = 0.103 mm)	=	0.088

WIRE DIAMETER READINGS			WIRE DIAMETER READINGS		
NO.	HORIZ (mm)	VERT (mm)	NO.	HORIZ (mm)	VERT (mm)
1	0.048	0.053	26	0.051	0.054
2	.049	.053	27	.051	.053
3	.051	.056	28	.056	.049
4	.048	.053	29	.052	.049
5	.055	.054	30	.053	.052
6	.051	.047	31	.047	.045
7	.057	.055	32	.049	.054
8	.054	.050	33	.047	.054
9	.050	.051	34	.049	.044
10	.054	.048	35	.051	.055
11	.049	.047	36	.050	.054
12	.048	.048	37	.046	.050
13	.048	.051	38	.049	.054
14	.050	.050	39	.052	.055
15	.052	.046	40	.053	.051
16	.049	.056	41	.050	.045
17	.050	.048	42	.048	.056
18	.051	.056	43	.052	.050
19	.050	.049	44	.049	.047
20	.052	.051	45	.052	.048
21	.052	.041	46	.053	.041
22	.050	.042	47	.053	.056
23	.048	.050	48	.050	.058
24	.052	.043	49	.053	.053
25	.058	.048	50	.052	.050

Average actual diameter horizontal
(limits are 0.0447 to 0.0583 mm) = 0.051
Average actual diameter vertical
(limits are 0.0447 to 0.0583 mm) = 0.050