REC-ERC-85-6

CHLOROPHYLL *a* CONCENTRATION AND DISTRIBUTION IN TWIN LAKES, COLORADO PRIOR TO OPERATION OF MT. ELBERT PUMPED-STORAGE POWERPLANT, 1977—81

January 1985

Engineering and Research Center

U. S. Department of the Interior

Bureau of Reclamation

7-2090 (4-81)
Bureau of Reclamation

TECHNICAL REPORT STANDARD TITLE PAGE

1. REPORT NO. REC-ERC-85-6	2. GOVERNMENT ACCESSION NO.	3. RECIPIENT'S CATALOG NO.
4. TITLE AND SUBTITLE Chlorophyll *a* Concentration and Distribution in Twin Lakes, Colorado, Prior to Operation of Mt. Elbert Pumped-Storage Powerplant, 1977-81		5. REPORT DATE January 1985 6. PERFORMING ORGANIZATION CODE D-1522
7. AUTHOR(S) S. G. Campbell J. F. LaBounty		8. PERFORMING ORGANIZATION REPORT NO. REC-ERC-85-6
9. PERFORMING ORGANIZATION NAME AND ADDRESS Bureau of Reclamation Engineering and Research Center Denver, CO 80225		10. WORK UNIT NO. 11. CONTRACT OR GRANT NO. 13. TYPE OF REPORT AND PERIOD COVERED
12. SPONSORING AGENCY NAME AND ADDRESS Same		14. SPONSORING AGENCY CODE DIBR

15. SUPPLEMENTARY NOTES

Microfiche and/or hard copy available at the E&R Center, Denver, Colorado

Editor: RDM (c)

16. ABSTRACT

A series of studies is being performed to identify changes in the limnology of Twin Lakes, Colorado, resulting from the operation of the Mt. Elbert Pumped-Storage Powerplant. This report presents preoperation chlorophyll concentrations in Twin Lakes from 1977 through 1981.

Twin Lakes are a pair of oligotrophic, dimictic, and cool, high-mountain lakes. The lakes are thermally stratified between spring and fall turnover periods. They are ice-covered in winter and are poor in phosphorus and nitrogen nutrients.

Some type of standing-crop, or primary-production estimate is necessary in any ecological evaluation because it represents the size of the food-chain base. The assessment of chlorophyll *a* concentration is the quickest and easiest way to estimate standing crop in a body of water. The mean average chlorophyll *a* concentration in Twin Lakes was 3.2 mg/m^3; the minimum observed chlorophyll *a* concentration was <0.1 mg/m^3; and the maximum measured chlorophyll *a* concentration was 52.1 mg/m^3.

Twin Lakes tend to be more productive after fall turnover and sometimes continue to be productive in winter if snow cover is light. Midwinter peaks in chlorophyll concentration occurred in the upper lake in 1977, 1978, and 1981, and in the lower lake in 1981. Summer peaks in chlorophyll *a* concentration have occurred in both lakes, but have never been observed simultaneously. The upper lake experienced summer peaks in chlorophyll concentration in 1977 and 1981; the lower lake in 1979.

Winter chlorophyll distribution peaks tend to occur closer to the surface of the water column. Whereas, summer chlorophyll distribution peaks occur farther down in the water column, usually at or near the thermocline.

The minimum chlorophyll concentrations in both lakes occur just before spring and fall turnover periods. The upper lake tends to display reduced chlorophyll *a* concentration throughout the spring runoff period.

Chlorphyll *a* biomass and other primary-productivity parameters are more variable in the upper lake because it is the receiving basin for both a diversion from the western slope and for uncontrolled runoff from Lake Creek. The upper lake seems to buffer the lower lake from increases in turbidity and flushing rate during runoff.

17. KEY WORDS AND DOCUMENT ANALYSIS

a. DESCRIPTORS-- limnology/ chlorophyll/ pumped-storage/ reservoirs/ powerplants/ environment/ ecology/ oligotrophic/ mesotrophic/ eutrophic/ runoff/ algae/ phytoplankton/ *Asterionella/ Dinobryon/ Synedra/ Dictyosphaerium-Sphaerocystis*

b. IDENTIFIERS--Twin Lakes, CO/ Mt. Elbert Pumped-Storage Powerplant, CO/ Lake Creek/ Arkansas River Valley

c. COSATI Field/Group 06H *COWRR:* 0606 *SRIM:*

18. DISTRIBUTION STATEMENT *Available from the National Technical Information Service, Operations Division, 5285 Port Royal Road, Springfield, Virginia 22161.* (Microfiche and/or hard copy available from NTIS)	19. SECURITY CLASS (THIS REPORT) *UNCLASSIFIED* 20. SECURITY CLASS (THIS PAGE) *UNCLASSIFIED*	21. NO. OF PAGES 41 22. PRICE

REC-ERC-85-6

CHLOROPHYLL *a* CONCENTRATION AND DISTRIBUTION IN TWIN LAKES, COLORADO, PRIOR TO OPERATION OF MT. ELBERT PUMPED-STORAGE POWERPLANT, 1977-81

by

S. G. Campbell
J. F. LaBounty

January 1985

Applied Sciences Branch
Division of Research and Laboratory Services
Engineering and Research Center
Denver, Colorado

SI METRIC

UNITED STATES DEPARTMENT OF THE INTERIOR ★ BUREAU OF RECLAMATION

ACKNOWLEDGMENTS

The Twin Lakes Limnology Study is a cooperative effort involving the Bureau of Reclamation, Colorado Division of Wildlife, and the Fish and Wildlife Service's Colorado Cooperative Fishery and Wildlife Research Unit at Colorado State University. Work on this study is performed under the supervision of J. F. LaBounty, Head, Environmental Sciences Section; and L. O. Timblin, Jr., Chief, Applied Sciences Branch. All members of the Aquatic Ecology group, J. R. Boehmke, S. G. Campbell, S. J. Grabowski, S. D. Hiebert, D. M. Lieberman, R. A. Roline, and J. J. Sartoris, have contributed to field-collection and laboratory-processing aspects of this project. The Chemistry, Petrography, and Chemical Engineering Section has performed all water chemistry analyses.

The research covered by this report was funded under the Bureau of Reclamation Project Related Engineering and Scientific Studies Program, DR-331, Ecology and Limnology of Pumped-Storage Reservoirs; and the Fryingpan-Arkansas Project Lower Missouri Region.

CONTENTS

TABLES

FIGURES

APPLICATION

Results of this study will be combined with other preoperation data on the physical, chemical, and biological limnology of Twin Lakes for comparison with postoperation conditions to assess the impact of Mt. Elbert Powerplant. Information from these studies is already being used by the USBR (Bureau of Reclamation) in preparing designs and plans for other pumped-storage facilities. People concerned with the environmental effects of pumped-storage powerplants will find data from these studies useful. Results of the studies will interest anyone involved in the study of lake ecosystems, especially those located in montane regions.

INTRODUCTION

Ongoing ecological studies of Twin Lakes, Colorado, began in 1971. The purpose of the studies is to learn more about the interrelationships of an aquatic ecosystem influenced by operation of a pumped-storage powerplant. The Mt. Elbert Pumped-Storage Powerplant, located on Lower Twin Lakes, began operating in September 1981. The data presented in this report are from 1977 through 1981, and represent preoperation chlorophyll concentrations observed in Twin Lakes. Evaluation of the effects of operating the Mt. Elbert Powerplant on the aquatic ecology of Twin Lakes is in progress, and postoperation chlorophyll concentrations will be reported in another publication.

General Description

Twin Lakes are located 24 km southwest of Leadville, Colorado, on Lake Creek, at the eastern foot of the Sawatch Range in the Upper Arkansas River Valley (fig. 1). The lakes are in the Southern Rocky Mountain Physiographic Province at 2802 m above mean sea level. The vegetation around the lakes is generally characteristic of the Montane or Canadian Life Zone (Weber, 1972 [1]*, Moenke, 1971 [2], Pennak, 1966 [3]). The installation of the outlet control works; dredging of the channel between the two lakes; human activities in the area; and the introduction of rainbow trout (*Salmo gairdneri*), lake trout (*Savelinus namaycush*), and mysis shrimp (*Mysis relicta*) have altered the original ecology of Twin Lakes to produce the present ecosystem.

The shoreline and bottom topography of Twin Lakes are shown on figures 2 and 3, respectively. The present topography of the western side of the Arkansas River Valley in the Twin Lakes area is largely the result of glacial action on earlier alluvial deposits (Buckles, 1973 [4]). Twin Lakes probably originated with the morainic damming of Lake Creek (Sartoris, et al., 1977 [5]). Moraines are prominent today around the eastern shores of the lower lake and along the low ridge separating the upper and lower lakes.

The lower lake is the largest natural mountain lake in Colorado (Pennak, 1966) [3]. Present maximum water-surface areas are about 736.5 ha for the lower lake and 263.4 ha for the upper lake, with depths of about 27 and 28 m, respectively. Maximum capacity at elevation 2802 m is 112 653 088 m^3 in the lower lake and 41 078 107 m^3 in the upper lake.

Limnology and Water Quality

General physical-chemical and water-quality data on Twin Lakes are summarized in table 1. These data are discussed in detail in Sartoris, et al., (1977) [5]; LaBounty and Sartoris (1981) [6]; LaBounty and Sartoris (1982) [7]; and LaBounty and Sartoris (1983) [8].

Twin Lakes are cold; they have a combined mean annual water-surface temperature of 8.4 °C. The range of observed water-surface temperatures in Twin Lakes throughout the reporting period was 0 to 18 °C. Minimum temperatures occur just below winter ice cover, and maximum temperatures occur in midsummer, usually July or August.

The lakes are generally well-oxygenated to the bottom; their combined mean annual bottom DO (dissolved oxygen) concentration is 5.7 mg/L. Periods of low to anoxic bottom DO concentrations can occur in late winter to early spring and at the height of summer thermal stratification. Twice in recent years, anoxic bottom DO concentrations in early spring have caused reducing conditions (oxidation-reduction potentials = Eh <300 mV) in the lakes. Chemical releases of heavy metals, particularly manganese, from the bottom sediments have been observed in the lakes. This resulted in a "winter kill" phenomenon. Populations of planktonic and benthic organisms were affected by the winter kill that occurred during the severe winter of 1974-75. Recovery to prewinter kill abundance seemed to take several years (LaBounty and Sartoris, 1981) [6]. Another severe winter occurred in 1978-79, but a serious winter kill was averted by a sudden warming period when decreasing snow cover and increasing inflow resulted in a rapid reoxygenation of the upper lake.

The combined mean annual pH (hydrogen ion concentration) for both lakes is 7.6. Maximum pH values are usually observed at or near the surface in midsummer. Minimum pH values are usually observed on

* Numbers in brackets refer to entries in the bibliography.

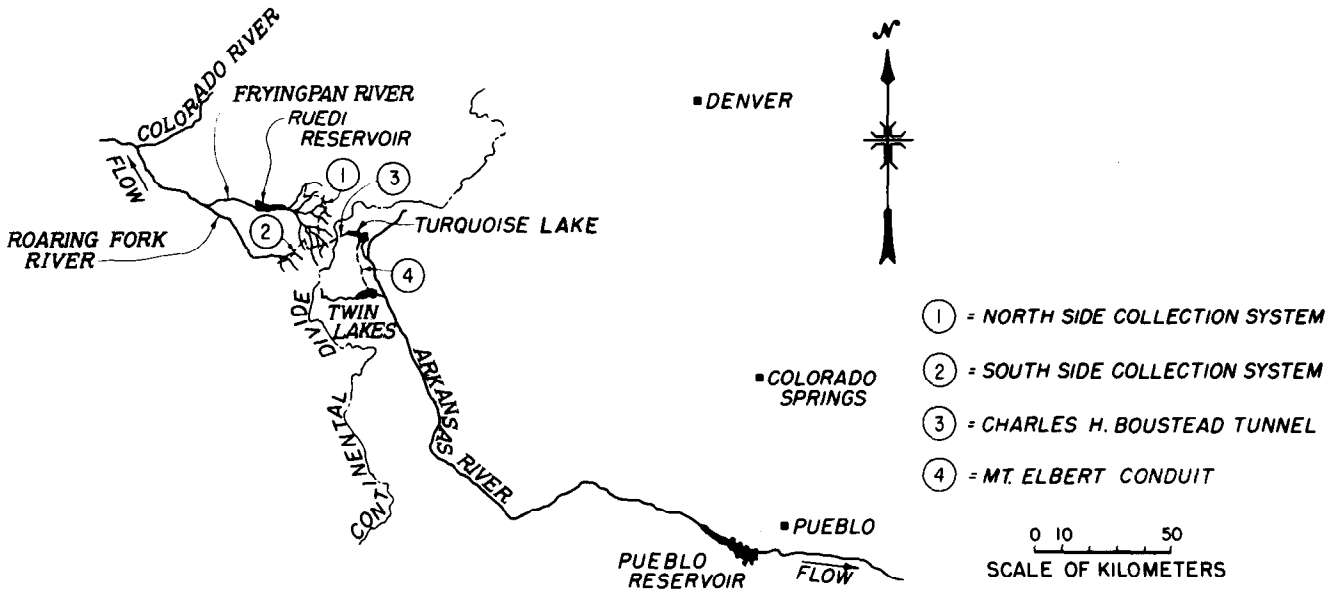

Figure 1. – General location map of Twin Lakes, Colorado.

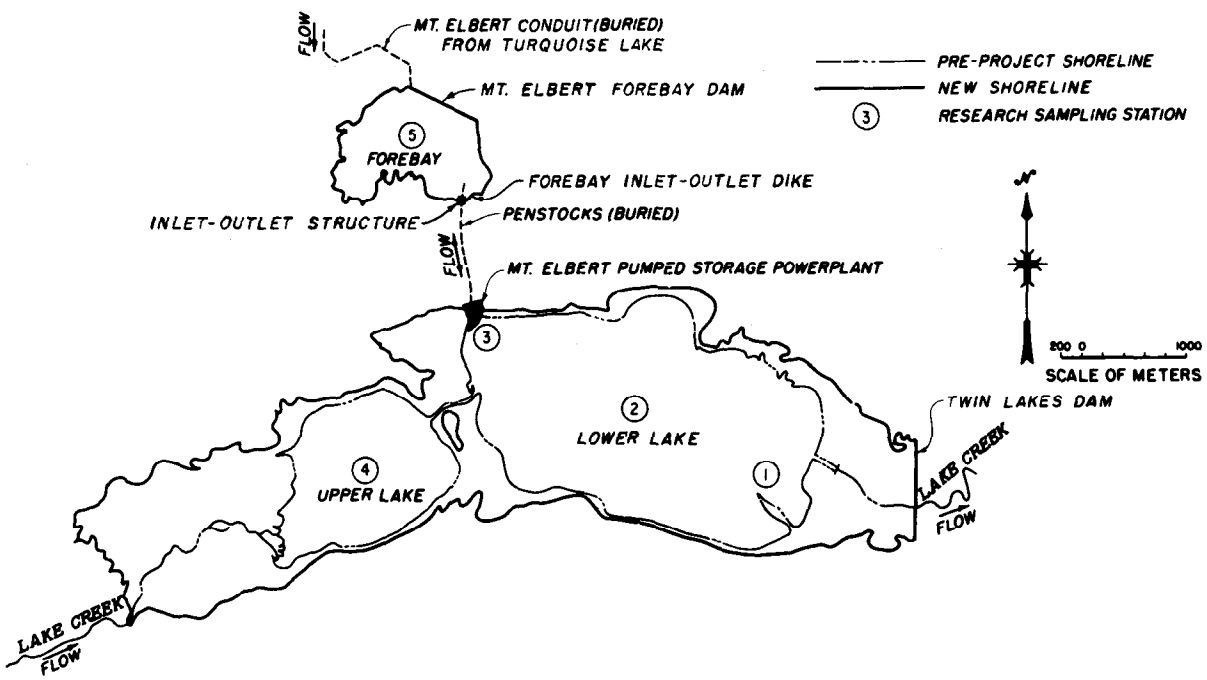

Figure 2. – Twin Lakes shoreline.

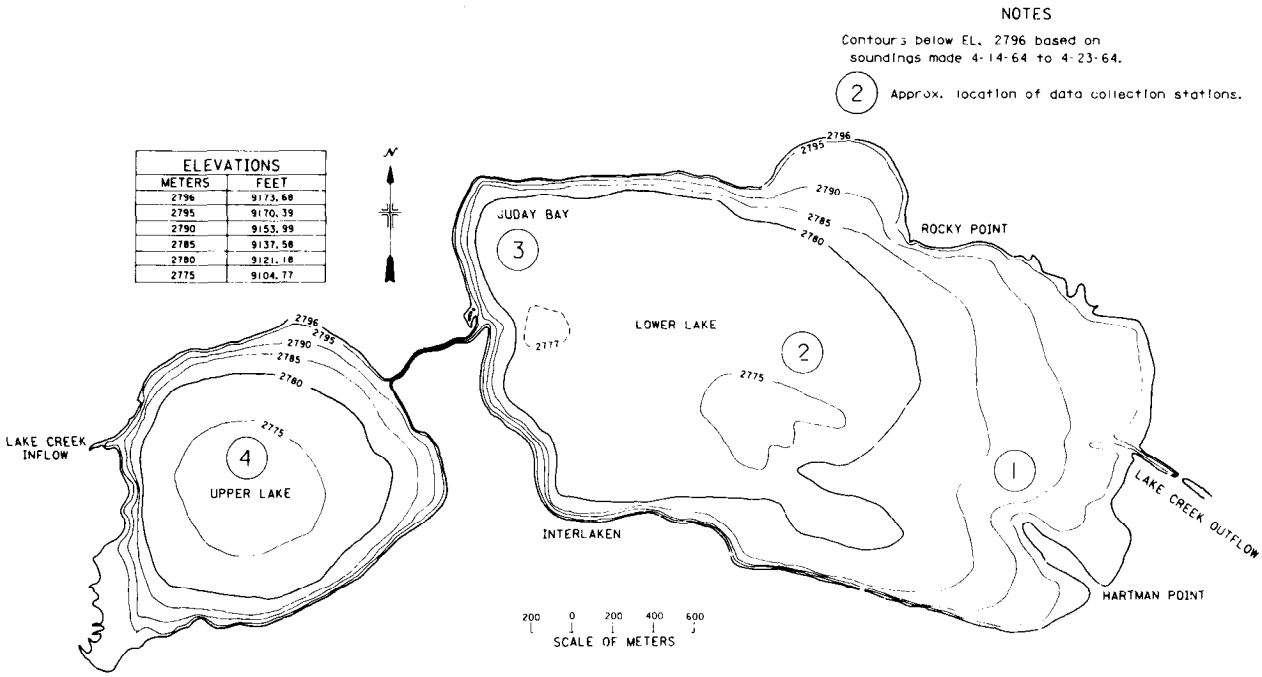

Figure 3. – Bottom topographic map of Twin Lakes.

the bottom during winter stagnation. The range for pH values at Twin Lakes throughout the reporting period was 6.4 (observed on the bottom) to 8.3 (observed at the surface).

Twin Lakes are relatively soft and dilute calcium bicarbonate lakes (Sartoris, et al., 1977) [5]. Principal anions are HCO_3^{-1} and SO_4^{-2}, and the principal cation is Ca^{+2}. A slight tendency for dilution in high-volume runoff years may be seen in the data summarized in table 1. However, all major ion concentrations are relatively stable on a mean annual basis. Each year ions increase as flow decreases, and vice versa (LaBounty and Sartoris, 1981) [6]. Concentrations of heavy metals and phosphorus-nitrogen nutrients are generally low (table 1). Iron concentrations increase in high-runoff years and each year during runoff. Generally, all mean annual concentrations of metals are higher in the upper lake than in the lower lake (table 1).

Productivity in Twin Lakes is phosphorus-limited (LaBounty and Sartoris, 1982) [7]. Total phosphorus concentrations are quite low and orthophosphate is rarely detected. Total phosphorus and nitrogen concentrations tend to be greatest just after turnover periods in spring and fall. The trend toward higher concentrations in the upper lake indicated by the metals and major ion concentrations is not indicated by the phosphorus-nitrogen nutrient data summarized in table 1.

Twin Lakes are optically clear much of the year; sediment-caused turbidity is confined to runoff periods in the late spring and early summer. Table 2 summarizes mean annual inflow to Twin Lakes via Lake Creek for a 10-year period, which includes the major reporting period, 1977 through 1981.

Statistical analyses of Twin Lakes data through 1979, reported by Keefe (1980) [9], have identified the volume and, to lesser degrees, the timing and duration of annual runoff, as critical parameters affecting the limnology of Twin Lakes. During the major reporting period, 1977 through 1981, two years, 1979 and 1980, had inflows significantly greater than the 10-year mean. And two years, 1977 and 1981, had significantly less than the 10-year mean volume of inflow.

Morphometric parameters and chemical data from eight high-mountain lakes are summarized for comparison in table 3. Pechlaner (1971) [10] characterizes high-mountain lakes as oligotrophic, hydrographically open, cool, and generally dimictic. They are usually thermally stratified between spring and fall turnovers, ice-covered in winter, weakly buffered by bicarbonates, and poor in phosphorus and nitrogen.

Twin Lakes are similar in size to several of the lakes listed in table 3. The majority of these high-mountain lakes are also similar in mean depth, pH, and conductivity. However, Twin Lakes differ markedly from

Table 1. – Mean physical-chemical and water-quality parameters in Twin Lakes, Colorado, 1977-81.

Year/ lake	Surface water temp °C	Hydrogen Ion conc pH	Bottom dissolved O_2 mg/L	Bottom conductivity µS/cm	Bottom redox mV	Inflow ± 10-yr mean
[1]1977						
Upper	9.9	7.7	5.5	70	606	–
Lower	10.9	7.9	5.4	71	603	
1978						
Upper	4.9	7.6	5.6	82	540	+
Lower	5.4	7.7	5.3	72	527	
1979						
Upper	7.8	7.5	6.1	76	441	+
Lower	8.1	7.8	5.8	70	447	
1980						
Upper	8.1	7.6	6.7	79	429	–
Lower	8.6	7.6	5.5	74	430	
1981						
Upper	9.8	7.6	5.5	88	373	–
Lower	10.8	7.7	5.5	84	373	

Year/ lake	Calcium	Magnesium	Sodium	Potassium	Bicarbonate alkalinity	Sulfate	Chloride	Total dissolved solids
	mg/L							
[1]1977								
Upper	11.4	2.5	1.0	0.9	26.6	16.6	1.3	60.3
Lower	11.0	2.4	1.2	0.9	28.2	15.9	1.3	61.1
1978								
Upper	10.9	2.7	1.2	1.0	25.7	170	1.0	60.4
Lower	9.6	3.0	1.1	1.0	25.9	16.0	1.1	57.6
1979								
Upper	9.9	1.5	1.1	1.0	24.8	10.9	1.9	51.1
Lower	9.1	1.5	1.2	0.9	23.8	10.0	1.9	48.3
1980								
Upper	10.7	1.6	1.3	1.0	25.0	15.4	0.5	54.0
Lower	10.0	1.3	1.2	1.0	24.3	13.2	0.7	46.0
1981								
Upper	10.6	1.7	1.2	0.8	25.3	14.0	1.2	49.0
Lower	9.8	1.4	1.3	0.8	24.0	11.1	1.5	48.0

Year/ lake	Bottom Iron	Bottom Manganese	Bottom Copper	Bottom Zinc	Total Phosphorus	Ammonia	Total Nitrogen	Nitrate
	µg/L							
[1]1977								
Upper	170.4	42.9	4.0	4.8	3.3	23.6	125.7	28.8
Lower	68.0	20.8	3.5	4.8	3.3	18.9	98.5	8.3
1978								
Upper	101.3	41.1	3.2	8.4	1.2	8.4	48.2	44.5
Lower	87.5	34.3	3.3	8.1	1.7	5.7	50.8	5.6
1979								
Upper	375.0	58.9	4.1	5.7	0.7	28.5	76.7	52.8
Lower	79.6	35.1	3.9	3.4	0.7	21.0	64.3	12.0
1980								
Upper	266.4	88.9	4.2	11.2	1.2	15.4	123.5	55.0
Lower	59.3	52.8	3.7	11.1	1.5	13.5	130.0	26.0
1981								
Upper	134.0	44.3	3.5	12.7	1.4	–	110.0	–
Lower	170.3	22.7	2.4	11.8	9.4	–	110.1	–

[1] Most of ice-covered season not included in mean.

Table 2. – Mean annual inflow to Twin Lakes via Lake Creek, 1972-81.

Year	Volume acre-ft	Volume $m^3 \times 10^3$	% of 10-year mean
1972	11,372	14,033	120
1973	11,203	13,825	119
1974	8,193	10,110	87
1975	10,846	13,384	115
1976	8,427	10,399	89
1977	4,676	5,770	49
1978	12,600	15,548	133
1979	12,012	14,823	127
1980	8,561	10,564	91
1981	6,590	8,132	57
10-year mean	9,448	11,659	100

these lakes in concentration of total phosphorus. The concentration of total phosphorus in the other lakes is one order of magnitude greater than that in Twin Lakes; this indicates the extremely phosphorus-limited conditions present in Twin Lakes.

Chlorophyll

Chlorophylls are photosynthetically active pigments in living plants, which convert light energy to stored energy. The chlorophyll pigment common to all plants is chlorophyll *a*. Accessory chlorophylls, *b*, *c*, c_1, c_2, and various carotenoid and phaeophytin pigments, are also found in plants; however, none of these are common to every plant. Chlorophyll *b* is present in terrestrial plants and green algae, but not in diatoms where chlorophyll *c* is the accessory photosynthetic pigment. Because chlorophyll *a* is present in all plants, it is the pigment used to measure standing crop. The accessory pigments are identifiers of the type of plants that make up the standing crop. Some type of standing-crop measurement is necessary in any ecological evaluation because it represents, or quantifies, the size of the food-chain base. Standing crop, or primary production, can be measured in several different ways; e.g., by weight of vegetative material per area unit, by the number of planktonic organisms per volumetric unit, by the weight of chlorophyll *a* per unit area, and by carbon fixation rate per time unit per unit area.

The assessment of chlorophyll *a* concentration is the quickest, easiest way to estimate standing crop or trophic status in a body of water. Categorizing a body of water trophically makes it easily understandable to biologists and recreation and fisheries' managers for problem solving or management activities. Chlorophyll *a* concentration is widely reported in the literature and is used to classify waters into three major trophic categories (Likens, 1975) [11]:

Table 3. – Morphometric parameters and chemical data from selected high-mountain lakes.

Lake	Elevation m	Area ha	Mean depth m	Conductivity µS/cm	pH	Total phosphorus mg/L	Total nitrogen mg/L	Source of data
Utah								
Fish Lake	2695	1012	25.9	130-185	7-9.4	0.02-0.05	0.1-0.4	Wegner, pers. communication
Lost Creek Reservoir	1830	168	19.5	250	7.5-8.2	0.02	0.1-0.25	Wegner, pers. communication
Meeks Cabin Reservoir	2658	193	20.7	30-45	7-7.5	0.02	0.2	Wegner, pers. communication
Colorado								
Green Mountain Reservoir	2377	369	22.2	107	7.9	0.01	0.293	EPA (1977) [11]
Dillon Reservoir	2691	1276	24.6	91	7.6	0.01	0.241	EPA (1977) [12]
Grand Lake	2548	205	41.3	5-35	6.5-7.1	0.01	0.273	EPA (1977) [13]
Lake Grandby	2521	2940	22.5	55	7.3	0.07	0.096	ibid
Twin Lakes	2802	1000	27.5	70-88	7.5-7.9	0.004	0.05-0.13	Sartoris, et al., (1977) [5]

Oligotrophic: low production, 0.3 to 3.0 mg/m^3 chlorophyll *a*

Mesotrophic: moderate production, 2 to 15 mg/m^3 chlorophyll *a*

Eutrophic: high production, 10 to 500 mg/m^3 chlorophyll *a*

By applying these criteria for chlorophyll *a*, Twin Lakes have been classified as oligotrophic (LaBounty and Sartoris, 1982) [7].

A comparison of chlorophyll *a* concentrations in various oligotrophic and mesotrophic lakes is shown in table 4. In this comparison, Twin Lakes resemble other oligotrophic lakes in Canada and Europe. Note that Likens' (1975) [14] classification system has overlap in the trophic categories, especially in the mesotrophic and eutrophic categories, where the orders of magnitude of concentration ranges result in extremely wide limits.

METHODS AND MATERIALS

Water samples for estimation of chlorophyll *a* concentrations were collected in each lake from 1974 through 1981, when the preoperation phase of the study ended. Prior to 1977, sampling was periodic and, in 1974 and 1975, sampling was performed at variable depths; therefore, the major reporting period is 1977-1981.

Chlorophyll *a* samples are collected in the field according to methods outlined in Strickland and Parsons (1972) [21] and Holm-Hansen and Reimann (1978) [22]. Standard sampling depths for collection of chlorophyll *a* samples are: 0.1, 1.0, 3.0, 5.0, 9.0, and 15.0 m. Water is collected with a vertical water bottle sampler at each depth interval and decanted into 1.9-L Nalgene containers. These containers are kept in an insulated chest until they are filtered in the field laboratory at Twin Lakes. In this laboratory, replicate 750 mL aliquots from each depth are filtered through fiberglass filter pads. The filters are suction dried, then folded in half with the sample surface inside, and placed in individual coin envelopes. These are immediately stored in a freezer and kept at −18 °C, until they can be processed in the Denver laboratory.

Chlorophyll *a* samples are always processed within 3 weeks of collection and usually within 7 days. Processing methods are described in detail in appendix A.

Chlorophyll concentrations in this report are calculated from the analytical results using the trichromatic equations reported by Strickland and Parsons (1972) [21] and Jeffery and Humphrey (1975) [23]. The calculation for chlorophyll *a* concentration in both sets of equations is identical (probability of chi square = 1.00). The chlorophyll concentration results, therefore, are directly comparable with results in the majority of open literature. Only the concentrations of chlorophyll *c* are significantly different using the Jeffrey-Humphrey equations.

Table 4. – Comparison of chlorphyll *a* concentrations in various oligotrophic and mesotrophic lakes.

Lake	Chlorphyll *a* mg/m³	Trophic classification (according to Likens, 1975 [14])	Author
LaCaldera, Spain	0.034-0.34	Ultraoligatrophic	Martinez (1980) [15]
Huron, Canada	1.9-3.0 (mean)	Oligotrophic	Glooschenko, et al. (1973) [16]
Fryxell, Antarctica	3-27	Mesotrophic to eutrophic	Vincent (1981) [17]
Constance, Germany	6-35	Mesotrophic to eutrophic	Lampert (1978) [18]
Pilburger See, Austria	1.0-13.8 (avg.)	Oligotrophic to mesotrophic	Rott (1981) [19]
Seminoe Reservoir, Wyoming, U.S.	13.6-50.0 (avg.)	Mesotrophic to eutrophic	Sartoris, et al., (1980) [20]
Flaming Gorge Reservoir, Wyoming-Utah, U.S.	4.0-62.0 (mean)	Mesotrohpic to eutrophic	Campbell, (unpublished)
Twin Lakes, Colorado, U.S.	1.5-4.1 (mean)	Oligotrophic	

RESULTS

All depth-profile chlorophyll data collected from Twin Lakes, Colorado, can be found in appendix B. Average chlorophyll *a* concentrations for the major reporting period are displayed on figure 4. The general trend in both lakes is for chlorophyll *a* concentrations to increase in the fall after turnover (fig. 4). When ice cover is clear, allowing sufficient light to penetrate, a winter peak in chlorophyll *a* concentration may occur. Summer peaks in chlorophyll *a* concentrations may occur in both lakes, but have never been observed to occur in both lakes simultaneously.

Winter peaks in chlorophyll *a* concentrations were observed in the upper lake in 1977 and 1978 (fig. 4). Summer peaks in chlorophyll *a* concentrations were observed in the upper lake in the low inflow years, 1977 and 1981. A large peak in chlorophyll *a* concentration was observed in summer 1979, in the lower lake.

Figures 5 and 6 are depth profiles of chlorophyll *a* concentrations measured from 1977-81, in the upper and lower lakes, respectively. From the data displayed on these figures, two depth-related trends in chlorophyll *a* distribution are easily observed. First, maximum observed chlorophyll *a* concentrations occur closer to the surface of the water column in the fall, winter, and early spring. Second, during the late spring and summer, peak chlorophyll *a* concentrations occur lower in the water column. Algal species associated with the major chlorophyll *a* peaks observed at Twin Lakes are listed in table 5.

In February 1977 and 1978, strong peaks in chlorophyll *a* concentration were observed near the surface in the upper lake (fig. 5). Strong peaks in chlorophyll *a* concentration at or near the 9-m sampling depth were observed in the upper lake in July and August of 1977, 1980, and 1981 (fig. 5). This same seasonal trend in chlorophyll *a* distribution can be seen in the chlorophyll *a* profiles for the lower lake displayed on figure 6. Peaks in chlorophyll *a* concentration are evident near the surface in December 1977, and January 1978, while peaks occur lower in the water column in the summer months of 1979 (fig. 6).

Nearly all of the maximum chlorophyll *a* concentrations observed in both lakes can be attributed to an increased population of the chrysophycean alga *Dinobryon* (table 5). The summer chlorophyll maximum, which was observed in the upper lake in July 1977, resulted from a large algal population dominated by *Dinobryon* colonies just above the thermocline (fig. 5). The colony count of *Dinobryon* averaged 1578 individuals per liter from 0 to 5 m deep on July 12, 1977, when a chlorophyll *a* concentration of 18.08 mg/m³ was measured at 5 m (table 5). A large concentration of chlorophyll was measured in the lower lake in August 1979. This resulted from an accumulation of *Dinobryon* at the bottom of the thermocline (at 9 m) (fig. 6). Colony counts from a water sample collected from about 9 m on August 16, 1979, showed *Dinobryon* to be at a density of 231 203 individuals per liter (table 5). The chlorophyll *a* concentration at the 9-m sampling depth on August 2, 1979, was 52.18 mg/m³ (fig. 6). Another summer chlorophyll maximum in the upper lake was measured in July, August, and September of 1981 (fig. 5). *Dinobryon* colonies reached densities of 17 971 individuals per liter between 5 to 10 m on September 2, 1981, and resulted in chlorophyll *a* concentration of 27.19 mg/m³ at 9 m (table 5).

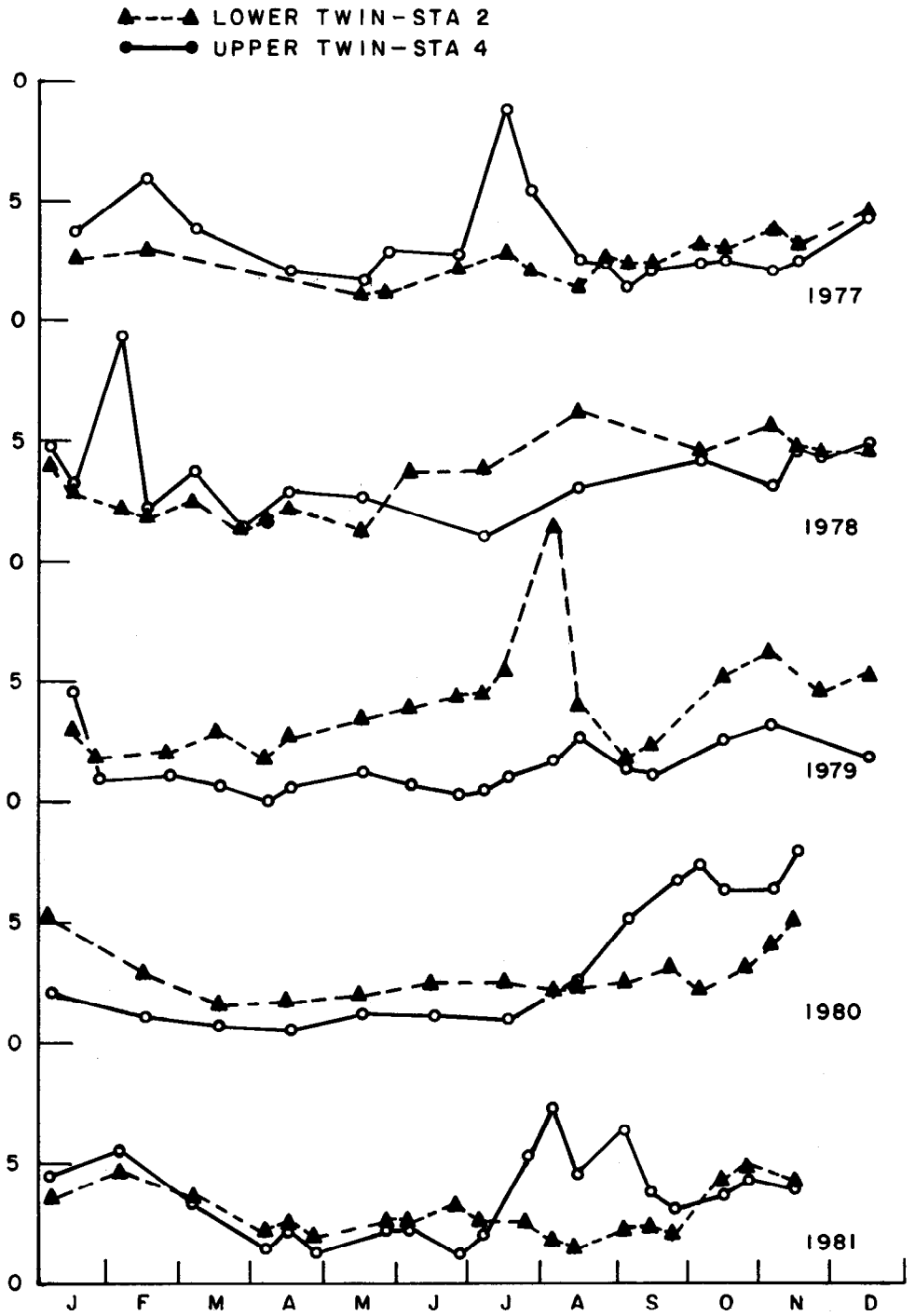

Figure 4. – Average chlorophyll *a* concentrations in Twin Lakes, 1977-81.

The maximum chlorophyll *a* concentrations measured under the ice in midwinter were in the upper lake during February 1977 and 1978 (table 5). The largest of these was measured in the upper lake during February 1978, when chlorophyll *a* concentration was 36.72 mg/m³ (table 5). This was associated with *Dinobryon* colonies numbering 1116 individuals per liter in the 0- to 5-m plankton sampling stratum. The smaller, February 1977 midwinter peak (fig. 5) of 7.16 mg/m³ (table 5) consisted of *Dinobryon* colonies in the 0- to 5-m sampling stratum numbering 1487 individuals per liter.

A midwinter chlorophyll maximum occurred in both lakes during February 1981 (table 5). Chlorophyll *a* concentration was distributed fairly evenly throughout the 0- to 5-m column sampled, averaging 4.88 mg/m³ in the lower lake and 7.07 mg/m³ in the upper

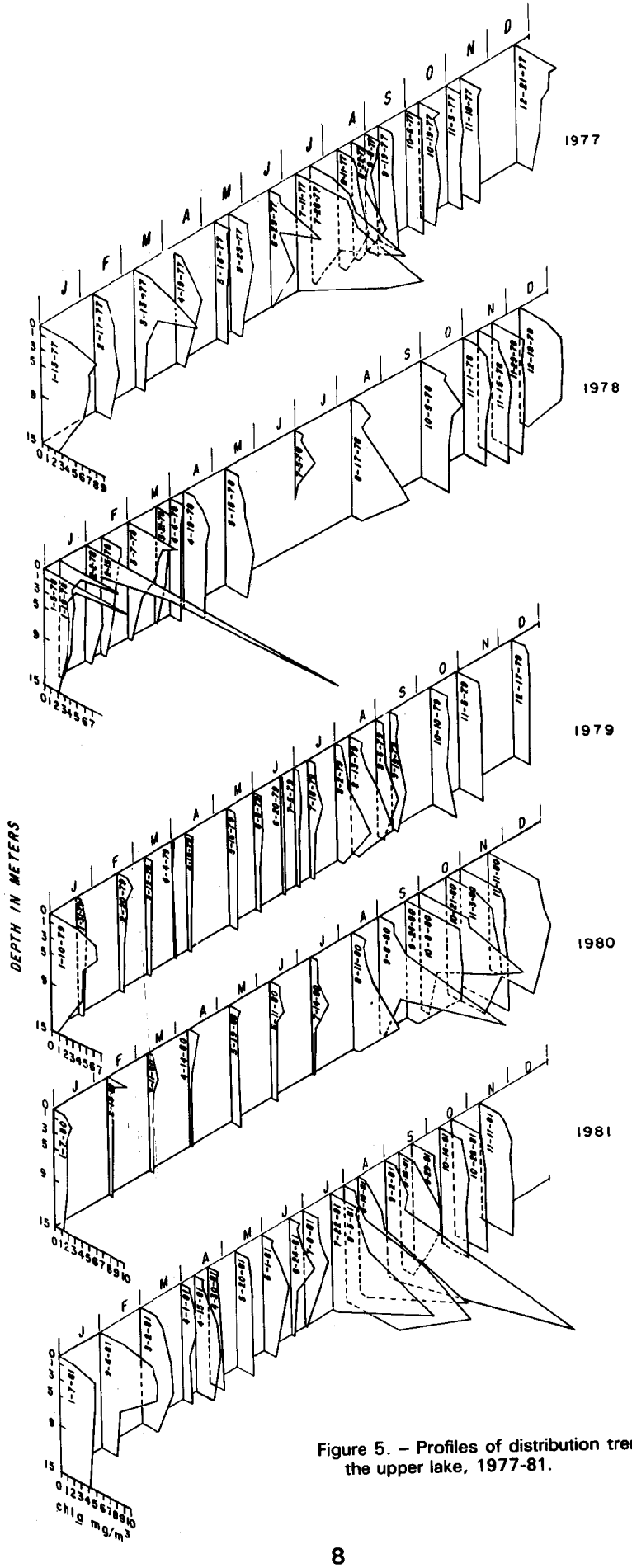

Figure 5. – Profiles of distribution trends in chlorophyll *a* in the upper lake, 1977-81.

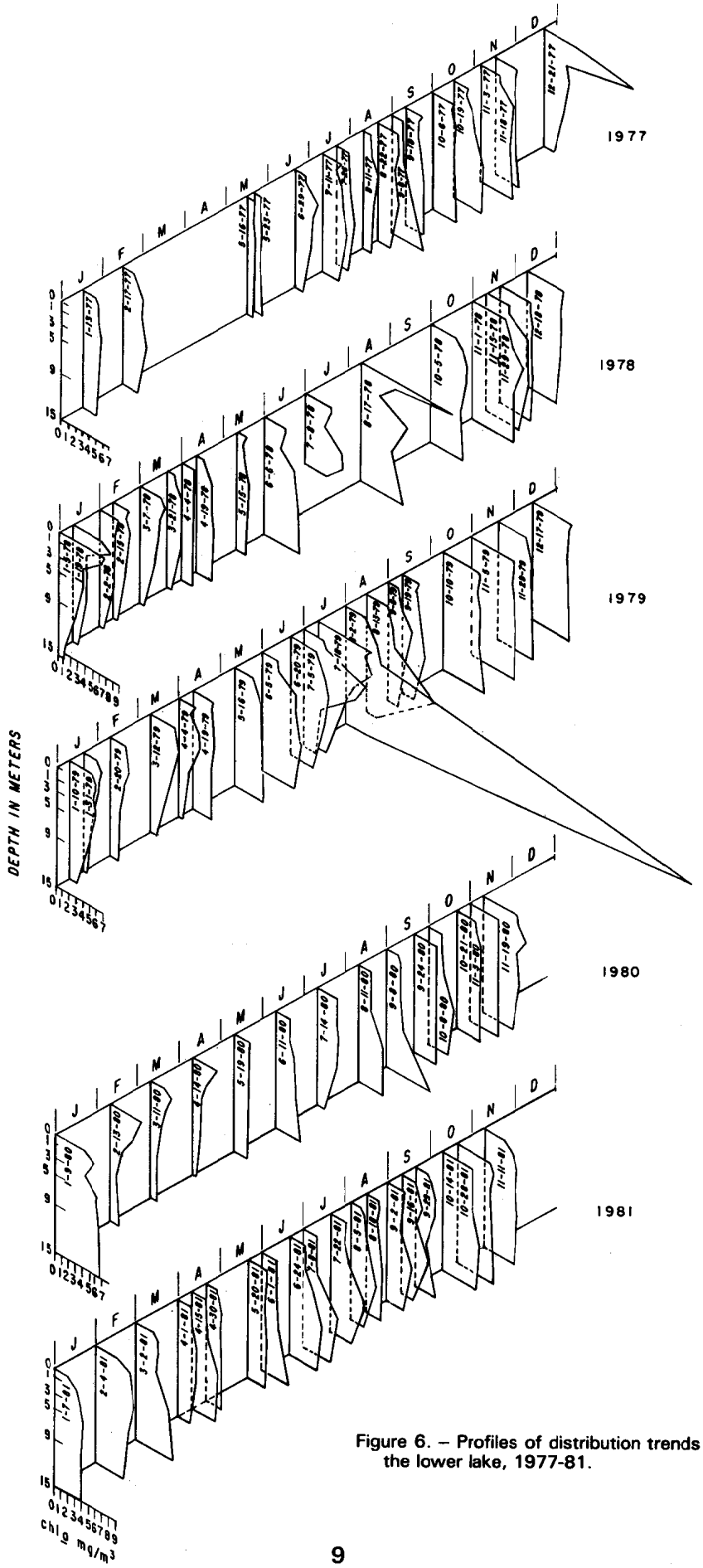

Figure 6. – Profiles of distribution trends in chlorophyll *a* in the lower lake, 1977-81.

Table 5. – Observed peaks in chlorophyll *a* concentration and associated algal species in Twin Lakes, Colorado, 1977-81.

Month	Year	Lake	Chlorophyll *a* concentration mg/m³	Algal species associated	Algal density individuals/L
July	1977	Upper	18.08	Dinobryon	1 578
August	1979	Lower	52.18	Dinobryon	231 203
September	1981	Upper	27.19	Dinobryon	17 971
February	1977	Upper	7.16	Dinobryon	1 487
February	1978	Upper	36.72	Dinobryon	1 116
February	1981	Upper	7.07	Synedra	28 036
February	1981	Lower	4.88	Dinobryon	2 493

lake (table 5). The density of *Synedra* at that time was measured at 28 036 individuals per liter in the 0- to 5-m sampling stratum in the lower lake, and *Dinobryon* colonies reached a density of 2493 individuals per liter in the 0- to 5-m sampling stratum in the upper lake (table 5).

Minimum concentrations of chlorophyll tend to occur just prior to the spring and fall turnover periods in both lakes. These are times that nutrient limitations are likely (figs. 5 and 6). During these periods algal populations could also be in transition from low-light, low-temperature adapted assemblages to high-light, warmer-temperature assemblages. Hutchinson (1967) [24] reports that such transitions are common in many North American lakes.

DISCUSSION

Critical factors affecting yearly trends in chlorophyll *a* concentrations in Twin Lakes are summarized in table 6. Ice-cover duration, depth of snow cover, and occurrence and duration of bottom anoxia are indicators of the severity of winter conditions at Twin Lakes. The deeper the snow cover and the longer the duration of ice cover, the more likely that algal populations will be stressed by reduced-light conditions. Bottom anoxia is a rare event, dependent upon deep snow cover and frozen inflow conditions in late winter or early spring. However, when bottom anoxia results in release of metals from the sediments, the resulting winter kill phenomenon can affect biota in the lakes for long periods.

Annual runoff conditions are represented in table 6 by runoff volume, as a percentage of the 10-year mean and by the mean euphotic depth during the June-July runoff period relative to the mean annual euphotic depth. A quick glance at table 6 will enable you to identify the years of above-average, below-average, or average runoff. Above-average runoff years severely limit light penetration, decreasing the available habitat for algal growth and reproduction. A high volume of runoff also increases the flushing rate of the lakes. Under these conditions, much of the biota may be flushed through the lakes in a more riverine manner, causing a decrease in chlorophyll *a* concentrations. Some algal species are also more sensitive to increased turbidity and may be more stressed during runoff.

Chlorophyll data from each of the years 1977-81 will be discussed separately, relating the distribution of chlorophyll *a* concentrations to the limnological events affecting algal populations in Twin Lakes. Some of the limnological and biological parameters associated with chlorophyll *a* are displayed on figures 7-11. These figures show inflow, euphotic depth, and algal population trends for each year of the major reporting periods, 1977-1981.

Winter conditions during 1977 were relatively mild (table 6). That is, the ice was extremely clear, with little or no snow cover, and some inflow continued throughout winter (LaBounty and Sartoris, 1978) [25]. As a result the lakes were well-oxygenated throughout the winter, and little or no metals were released from the sediments. Spring runoff in 1977 was about 49 percent of the 10-year mean (table 6). Therefore, the adverse effects on algal populations that can result from increased turbidity and flushing rate were minimized.

The upper lake seemed to respond to the mild winter conditions and below-average runoff by producing large peaks in chlorophyll *a* concentrations (fig. 4). The lower lake, as usual, had no observed peaks in chlorophyll *a*, instead displaying a generally increasing trend after fall turnover that continued through December (fig. 4).

Peak runoff in 1977 occurred in May and June, rather than in the more usual June and July. Algal populations in both lakes declined during the runoff period,

Table 6. – Critical factors affecting chlorophyll *a* concentrations in Twin Lakes, Colorado, 1977-81.

Year	Ice cover duration days	Mean snow cover cm	Occurrence of bottom anoxia	Duration of anoxia days	Volume of runoff % of 10-year mean	Euphotic depth (1% light level) annual/runoff mean
1977	146	3	No	–	49	10.2/8.0
1978	147	14	No	–	133	[1]14.4/5.1
1979	163	22	Yes	10	127	9.3/3.8
1980	170	23	No	–	91	10.6/5.8
1981	141	4	No	–	57	12.0/9.2

[1] Data extrapolated from secchi depth readings using the "3 times Secchi depth" rule of thumb for determining the euphotic depth.

but a small increase in *Asterionella* and *Dinobryon* was apparently responsible for the observed peaks in chlorophyll *a* in July 1977, in the upper lake (fig. 7). *Dinobryon* populations were also associated with increased chlorophyll *a* concentrations in the upper lake in February 1977, and in both lakes after fall turnover.

One interesting point illustrated on figure 7 is the peak in algal populations caused by increased *Asterionella* colonies in February 1977, in the lower lake that was not reflected in a corresponding increase in chlorophyll *a* concentrations (fig. 4). This has led to speculation that there may be a species-related difference in the amount of chlorophyll *a* per individual between *Dinobryon* and *Asterionella*. Additional field experiments, and other instances where increased algal populations did not result in increased chlorophyll *a* concentrations have indicated that thin, dense layers of algae sometimes occur at depths other than those routinely sampled for chlorophyll *a*.

These depths are sampled during plankton hauls, however. The results of field experiments comparing areal chlorophyll *a* concentrations based upon both discrete and integrated depth sampling will be discussed in a future report.

The winter of 1978 was more severe than the previous winter. Snow cover was moderate, averaging 14 cm (table 6). The lakes were well-oxygenated throughout the winter, and spring runoff was 133 percent of the 10-year mean (table 6). Light data are not available for the runoff period in 1978 (fig. 8). However, Secchi depth readings obtained by Colorado Division of Wildlife personnel in both lakes on July 5, 1978 (Nesler, personal communication), were used to extrapolate euphotic depth, and a decrease in the euphotic depth did occur (table 6). Both algal populations and chlorophyll *a* concentrations decreased in the June-July maximum-runoff period (figs. 3 and 4, respectively).

A peak chlorophyll *a* concentration was observed in the upper lake during February 1978, and was associated with an algal population of *Dinobryon* colonies (table 6). After spring turnover and above-average inflow, chlorophyll concentration and algal populations increased in both lakes throughout the summer and fall. The lower lake did not show a single peak in chlorophyll *a* concentration, but concentrations were high from July through December (fig. 4). The presence of algae other than *Asterionella, Dinobryon,* and *Synedra* in the total algal assemblage indicates increased nutrient availability (LaBounty and Sartoris, 1983) [8]. Soon after spring turnover in the lower lake, the green algae, *Dictyosphaerium/Sphaerocystis,* began to appear in the algal population (fig. 8). The increased *Dinobryon* component of the total algal assemblage was reflected in the generally high chlorophyll *a* concentrations observed in the lower lake throughout the summer and fall of 1978 (figs. 4 and 8).

Winter 1979 was more severe than the previous winter. Twin Lakes had an average snow cover of 38 cm (LaBounty, et al., 1980) [26]. In the early spring, anoxic conditions and pH values below 7.0 resulted in a sediment release of some elements toxic to aquatic life (e.g., Cu, Zn, and Cd). Fortunately, the rapid thawing of Lake Creek and melting of the snow cover confined the release of metals to two weeks in early April. Benthic organisms did not seem to be affected, but the reduction in available light caused by the snow cover, the release of metals from the sediments in early April, and the greatly decreased water clarity from mid-May through July 1979 (runoff averaged 127 percent of 10-year mean) all combined to reduce algal populations (fig. 9) and chlorophyll concentrations (fig. 4) in the upper lake. The lower lake, by contrast, did not experience anoxic bottom conditions and was less subject to turbidity and flushing during runoff because the upper lake served as a settling basin. Subsequently, during 1979, the lower lake had the highest chlorophyll concentration observed in Twin Lakes – (fig. 4) the result of an accumulation of *Dinobryon* at the thermocline in the

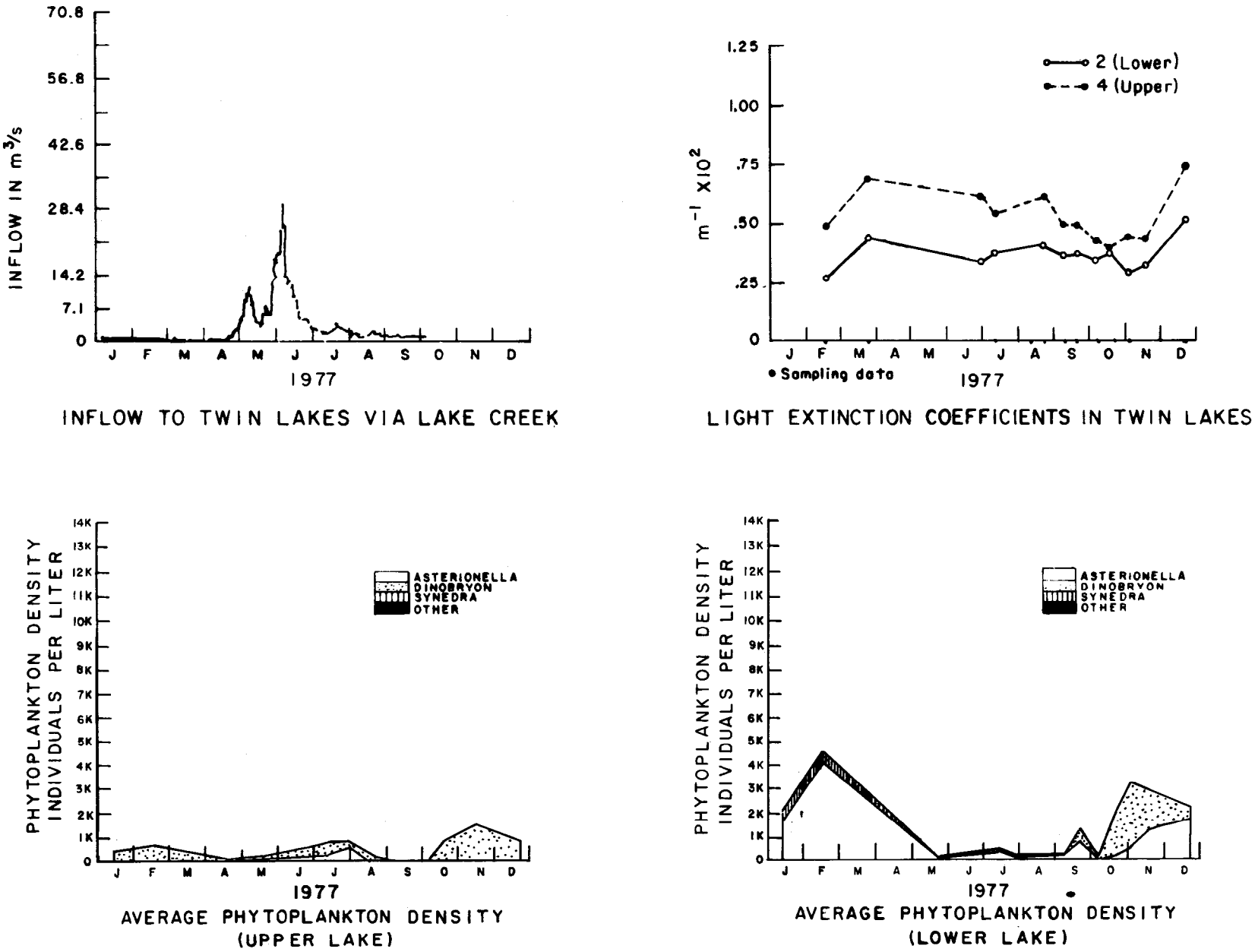

Figure 7. – Lake Creek inflow, light-extinction coefficients, and phytoplankton densities in Twin Lakes, 1977.

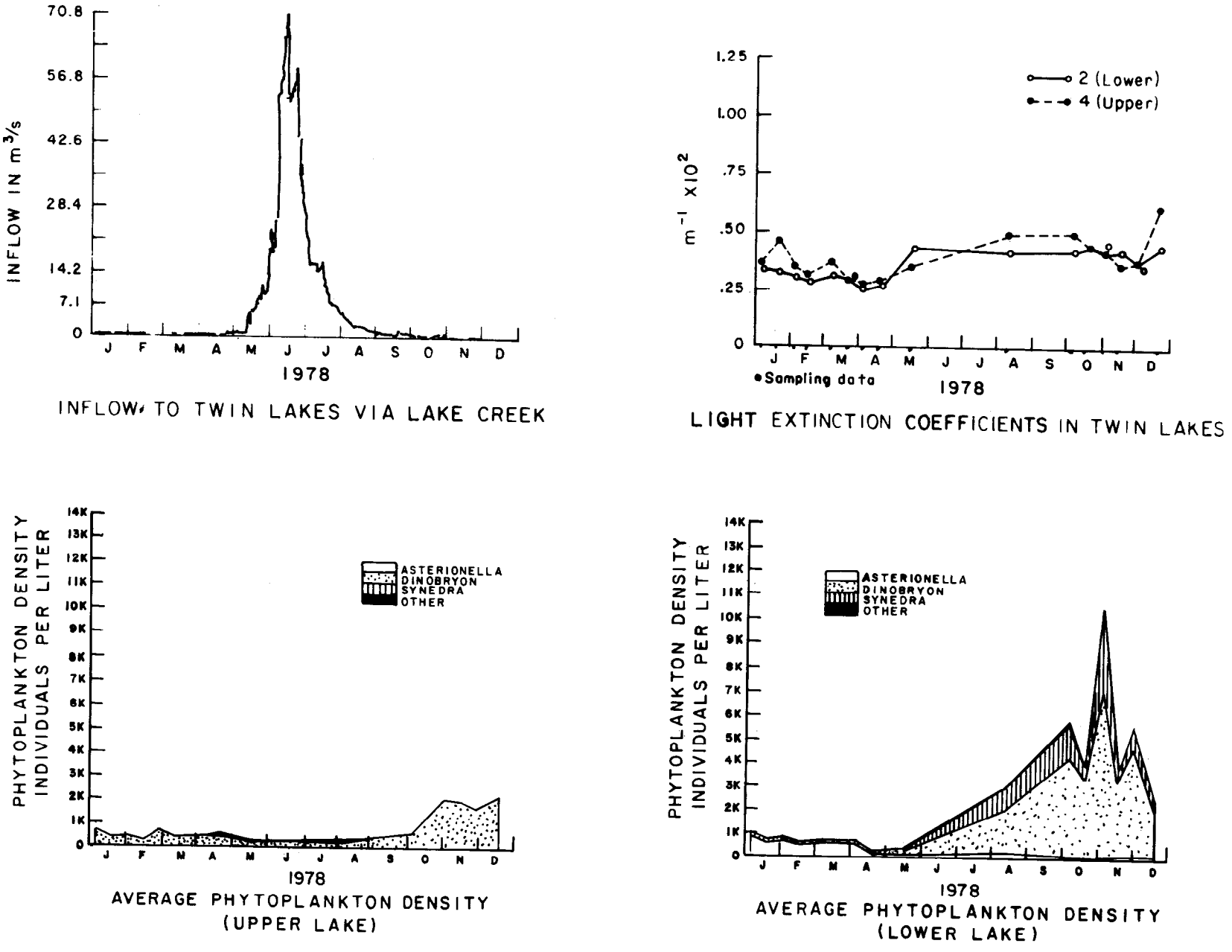

Figure 8. – Lake Creek inflow, light-extinction coefficients, and phytoplankton densities in Twin Lakes, 1978.

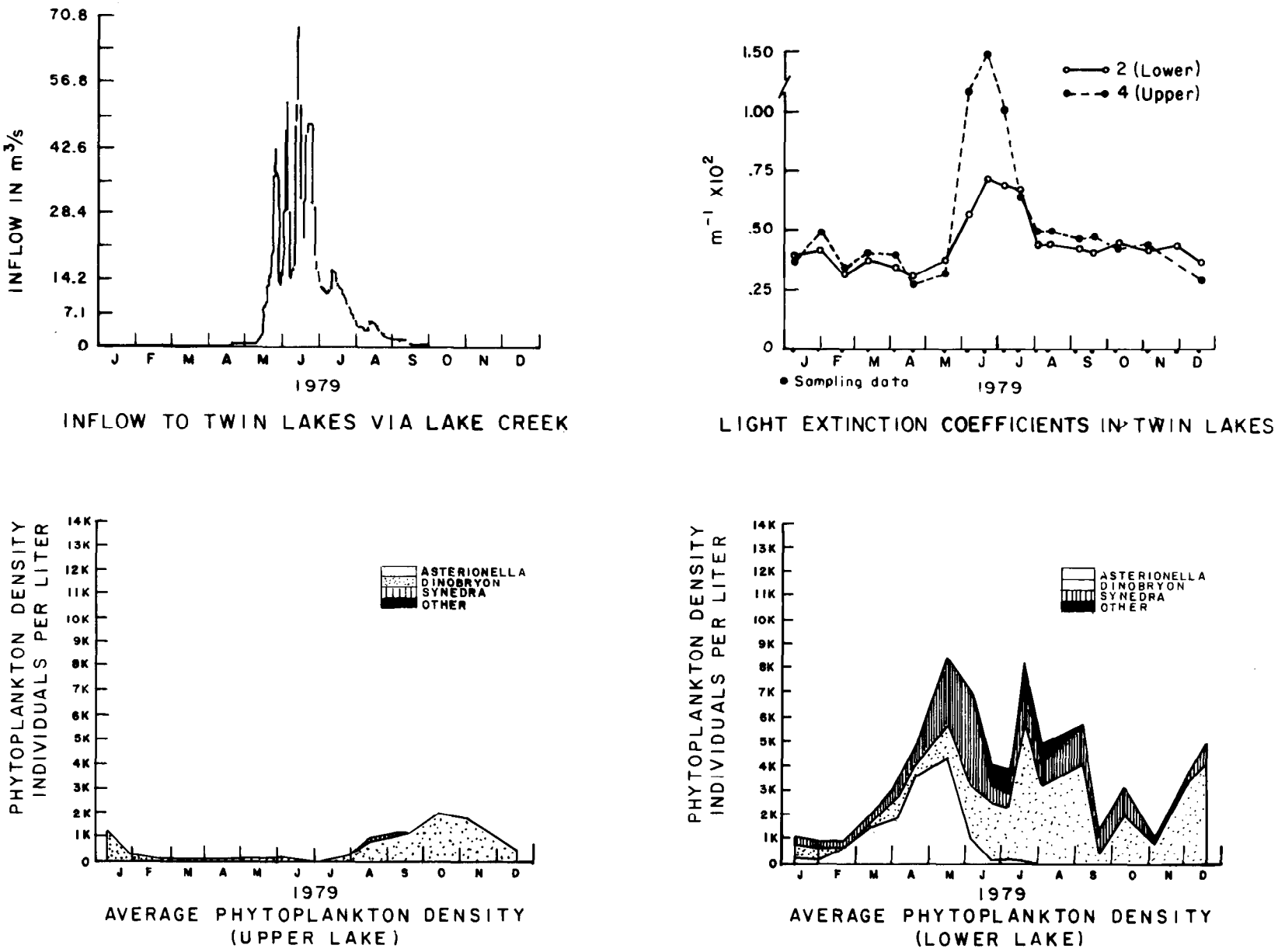

Figure 9. – Lake Creek inflow, light-extinction coefficients, and phytoplankton densities in Twin Lakes, 1979.

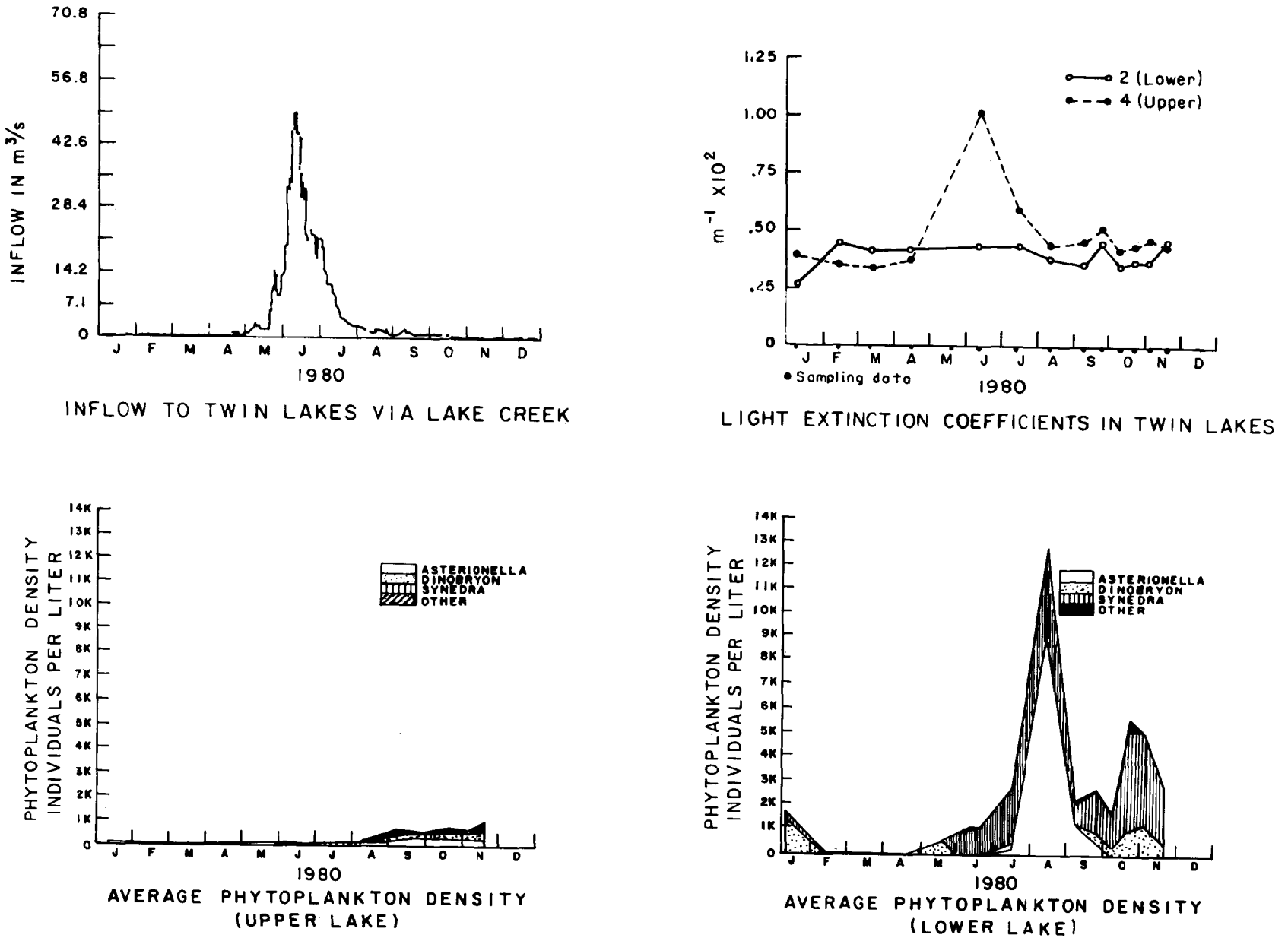

Figure 10. – Lake Creek inflow, light-extinction coefficients, and phytoplankton densities in Twin Lakes, 1980.

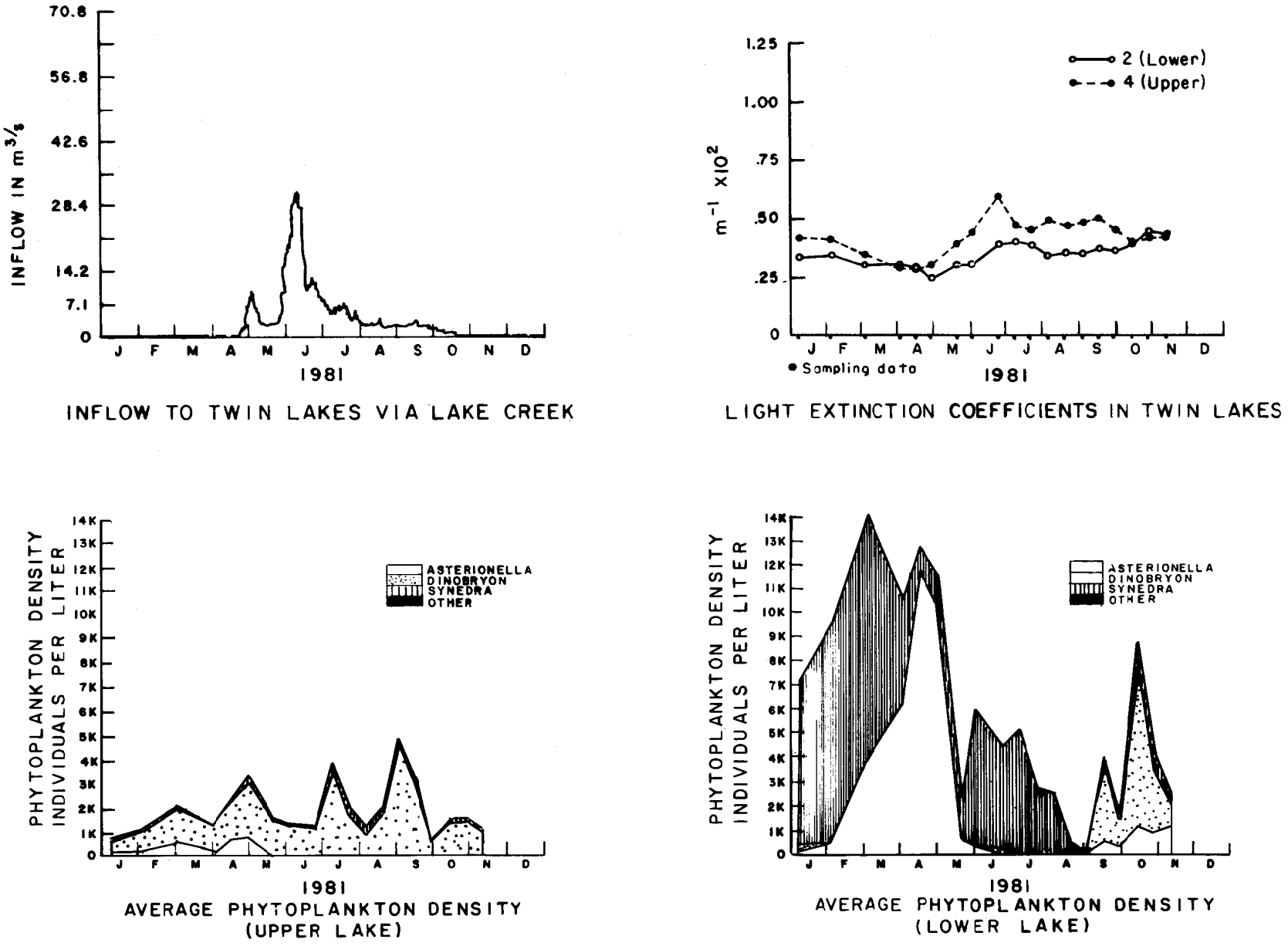

Figure 11. – Lake Creek inflow, light-extinction coefficients, and phytoplankton densities in Twin Lakes, 1981.

lower lake (fig. 9). As the season progressed, nutrients became less available and algal populations and chlorophyll concentrations decreased in the lower lake. As usual after fall turnover, algal production increased through the fall months in both lakes (fig. 4).

The following winter, 1980, was relatively mild. Snow cover was moderate and stagnation in the hypolimnion did not occur (table 6). Spring runoff volume was 91 percent of the 10-year mean, approximately 36 percent less than the volume for the previous year (table 6). The mean euphotic depth (table 6) indicates that the water was less turbid during runoff in June than during the previous year. The maximum observed chlorophyll *a* concentrations in both lakes occurred after fall turnover (fig. 4). In August 1980, as in 1977, the large *Asterionella* population measured in the lower lake did not correspond with an increased chlorophyll *a* concentration (fig. 10). Chlorophyll *a* concentrations did not increase in the lower lake (fig. 4) until the phytoplankton assemblage was dominated by species other than *Asterionella* (fig. 10).

Another point illustrated on figure 10 is the change in phytoplankton assemblage in the upper lake in late summer and fall, 1980. This is the only time during the major reporting period, 1977-81, that a significant portion of the algal assemblage in the upper lake included phytoplankton species other than *Asterionella, Dinobryon,* and *Synedra.* The green algae, *Dictyosphaerium/Sphaerocystis,* composed nearly 40 percent of the total phytoplankton numbers in summer and fall, 1980 (LaBounty and Sartoris, 1981) [6]. This may indicate a greater nutrient availability, higher water temperatures, or greater availability of light in the water column. These species were not previously observed in the upper lake during high runoff years (LaBounty, et al., 1980) [26].

Winter conditions in 1981 were relatively mild; the ice cover period was nearly 30 days shorter than the one in 1980, and 42 days shorter than that during the severe winter of 1979 (table 6). Snow cover was light, and Lake Creek did not freeze completely. Both lakes are well-oxygenated throughout the winter (LaBounty and Sartoris, 1982) [7]. Spring runoff in 1981 was about 57 percent of the 10-year mean and 34 percent less than the runoff volume in 1980 (table 6). As a result water clarity improved during the June-July runoff period (fig. 11). The mean euphotic depth was more than 3 m deeper than that during the same period in 1980 (table 6).

Algal population and chlorophyll concentrations in the upper lake during 1981, were above average, except during the spring turnover/runoff period (figs. 4 and 11). In the upper lake *Dinobryon* dominated the algal assemblage throughout 1981 (fig. 11). The observed peaks in chlorophyll *a* in the upper lake beginning in July 1981 (fig. 4) correspond to the observed peaks in plankton populations (fig. 11).

For a third time, a large diatom population observed throughout the winter, spring, and early summer in the lower lake during 1981 (fig. 11) was not matched with increased chlorophyll *a* concentrations (fig. 4). However, the 1981 fall bloom of *Dinobryon* observed in the lower lake does correspond to an increase in chlorophyll *a* concentration (fig. 4). Two possible causes for this phenomenon involve the relative content of chlorophyll *a* between the two types of algae and whether the algae occur in thin, dense layers at depths other than those routinely sampled for chlorophyll *a* estimation. Whatever the reason, variations in *Dinobryon* populations in Twin Lakes seem to correspond more closely to variations in chlorophyll *a* concentration than do variations in populations of the diatom species, *Asterionella* and *Synedra.*

SUMMARY

The productivity of Twin Lakes is similar to that of other oligotrophic, hydrographically-open, cool, generally dimictic, high-mountain lakes. The mean chlorophyll *a* concentration in both lakes from 1973 through 1981 was 3.2 mg/m^3. The range of average chlorophyll *a* concentrations was 1.5 to 4.1 mg/m^3 for both lakes. The range of minimum to maximum chlorophyll *a* concentrations in Twin Lakes was <0.1 to 52.1 mg/m^3. The upper and lower lakes have not experienced significant algal blooms simultaneously. Generally, if the average chlorophyll *a* concentration in one lake is greater than the 5-year mean, the average chlorophyll *a* concentration in the other lake is significantly less than the 5-year mean.

Algal populations in Twin Lakes are dominated by three main species of algae: the diatoms, *Asterionella* and *Synedra;* and the chrysophycean, *Dinobryon.* The green algae, *Dictyosphaerium/Sphaerocystis;* the chrysophycean alga, *Mallomonas;* the blue-green alga, *Oscillotoria;* and the diatom, *Tabellaria,* are observed in the phytoplankton assemblage periodically. Nearly all chlorophyll maximums in Twin Lakes are associated with increased populations of the alga, *Dinobryon.*

Examination of chlorophyll *a* distribution and concentration in Twin Lakes indicates that the upper lake was more productive in below-average runoff years, like 1977 and 1981, and the lower lake was more productive in the second of two consecutive above-average runoff years.

Chlorophyll *a* concentrations and algal populations tend to be more variable in the upper lake, because

it is the receiving basin for runoff from Lake Creek. The increased turbidity/flushing rate of runoff makes the smaller upper lake more vulnerable to greater variations in chlorophyll *a* concentrations and algal populations than the larger lower lake. The upper lake buffers the lower lake by acting as a settling basin for suspended sediment during runoff.

Generally, Twin Lakes tend to be more productive after fall turnover and sometimes continues to be productive under ice cover in winter, if the snow cover is light. Increased chlorophyll *a* concentrations were measured in the upper lake under the ice in 1977, 1978, and 1981. An increased chlorophyll *a* concentration was observed in the lower lake in midwinter 1981. Increased chlorophyll *a* concentrations during the summer months can occur in either lake, but have never been observed in both lakes simultaneously. An observed peak in chlorophyll *a* concentration occurred in the lower lake, in August 1979. Summer chlorophyll *a* peaks were observed in the upper lake, in 1977 and 1981. Winter peaks in chlorophyll *a* occur closer to the surface of the water column, while summer peaks in chlorophyll *a* are distributed farther down in the water column, usually at or near the thermocline. Minimum concentrations of chlorophyll *a* in both lakes tend to occur just before the spring and fall turnover periods. Reduced chlorophyll *a* concentrations are found in the upper lake throughout the spring runoff period.

BIBLIOGRAPHY

[1] Weber, W. A., *Rocky Mountain Flora*, Colorado Association University Press, p. 438, Boulder, CO, 1972.

[2] Moenke, H., *Ecology of Colorado Mountains to Arizona Deserts*, Museum Pictorial No. 20, Denver Museum of Natural History, p. 96, Denver, CO, 1971.

[3] Pennak, R. W., "Rocky Mountain States," In: Frey, D. G., *Limnology in North America*, University of Wisconsin Press, pp. 349-369, Madison, WI, 1966.

[4] Buckles, W. G., *Archaeological Salvage for the Fryingpan-Arkansas Project in Lake Chaffee and Pitkin Counties, Colorado, in 1972*, National Park Service Contract No. 2920P20073, 157 pp., Anthropology Laboratory, Southern Colorado State College, Pueblo, CO, 1973.

[5] Sartoris, J. J., J. F. LaBounty, and H. D. Newkirk, *Historical, Physical, and Chemical Limnology of Twin Lakes, Colorado*, Bureau of Reclamation Report No. REC-ERC-77-13, 86 pp., Denver, CO, 1977.

[6] LaBounty, J. F., and J. J. Sartoris, *Studies of the Effects of Operating the Mt. Elbert Pumped-Storage Powerplant on Twin Lakes, Colorado: 1980 Report of Findings*, Bureau of Reclamation Report No. REC-ERC-82-7, 56 pp., Denver, CO, 1981.

[7] LaBounty, J. F., and J. J. Sartoris, *Studies of the Effects of Operating the Mt. Elbert Pumped-Storage Powerplant on Twin Lakes, Colorado: 1981 Report of Findings*, Bureau of Reclamation Report No. REC-ERC-83-4, 88 pp., Denver, CO, 1982.

[8] LaBounty, J. F., and J. J. Sartoris, *Effects of Operating Mt. Elbert Pumped-Storage Powerplant on Twin Lakes, Colorado: 1982 Report of Findings*, Bureau of Reclamation Report No. REC-ERC-84-23, Denver, CO, 1984.

[9] Keefe, T. J., *Statistical Review of the Limnological Data Collected at Twin Lakes, Colorado, 1974-1979*, Prepared for Bureau of Reclamation, Denver, CO, under Contract No. 8-07-83-V0710, Environstat Associates, Fort Collins, CO, 1980.

[10] Pechlaner, R., "Factors That Control the Production Rate and Biomass in High-mountain Lakes," *Mitt. International Verein. Limnology*, 19:125-145, Stuttgart, November 1971.

[11] *EPA Report on Green Mountain Reservoir, Summit County, Colorado*, EPA Region 8, Working Paper 771, National Eutrophication Study, EPA CERL, Corvallis, OR, and EMSL, Las Vegas, NV, 14 pp. and appendices, EPA, 1977.

[12] *EPA Report on Dillon Reservoir, Summit County, Colorado*, EPA Region 8, Working Paper 769, National Eutrophication Study, EPA CERL, Corvallis, OR, EMSL, Las Vegas, NV, 16 pp. and appendices, EPA, 1977.

[13] *Water Quality Study on Grand Lake, Shadow Mountain Lake, and Lake Granby, Colorado – 1974*, EPA Report EPA – 90/2-77-002, 216 pp., EPA, Denver, CO, 1977.

[14] Likens, G. E., "Primary Productivity of Inland Aquatic Ecosystems," In: Lieth, H., and R. H. Whittaker, (ed.), *Primary Productivity of the Biosphere*, pp. 185-202, Springer-Verlag, New York, NY, 1975.

[15] Martinez, R., "Seasonal Variation of Phytoplankton Biomass and Photosynthesis in the High-Mountain Lake La Caldera (Sierra Nevada, Spain)," *Developments in Hydrobiology*, vol. 3,

M. Dokulil, H. Metz, and D. Jewson, editors, pp. 111-119, Dr. W. Junk by Pulishers, the Hague, 1980.

[16] Glooschenko, W. A., J. E. Moore, and R. A. Vallenweider, "Chlorophyll *a* Distribution in Lake Huron and its Relationship to Primary Productivity," *Proc. 16th Con. Great Lakes Res.*, pp. 40-49, International Association Great Lakes Reservoir, 1973.

[17] Vincent, W. F., "Production Strategies in Antarctic Inland Waters: Phytoplankton Eco-physiology in a Permanently Ice-covered Lake," *Ecology*, 62(5), pp. 1215-1224, 1981.

[18] Lampert, W., "Climatic Conditions and Planktonic Interactions as Factors Controlling the Regular Succession of Spring Algal Bloom and Extremely Clear Water in Lake Constance," *Verh. International Verein Limnology*, 20:969-974, Stuttgart, October 1978.

[19] Rott, E., "Primary Productivity and Activity Coefficients of the Phytoplankton of a Mesotrophic Soft-water Lake (Pelburger See, Tirol, Austria)," *International Revue Geo. Hydrobiology*, 66(11):1-27, 1981.

[20] Sartoris, J. J., J. F. LaBounty, S. G. Campbell, and J. R. Boehmke, *Limnology of the Upper North Platte Reservoir System, Wyoming*, Bureau of Reclamation Report No. REC-ERC-81-10, 129 pp., Denver, CO, 1981.

[21] Strickland, J. D. H., and T. R. Parsons, *A Practical Method of Seawater Analysis*, Fisheries Research Board of Canada, Ottawa, 310 pp., 1972.

[22] Holm-Hansen, O., and B. Riemann, "Chlorphyll *a* determination: improvements in methodology," OIKOS 30: 438-447, Copenhagen, Denmark, 1978.

[23] Jeffrey, S. W., and G. F. Humphrey, "New Spectrophotometric Equations for Determining Chlorophylls *a, b,* c_1, *and* c_2 in Higher Plants, Algae, and Natural Phytoplankton, *Biochemical Physiology Pflanzen*, (BBP), No. 2, Bd. 167, pp. 191-194 (1975).

[24] Hutchinson, G. E., *A Treatise on Limnology*, vol. 2, 1115 pp., John Wiley and Sons, Inc., New York, NY, 1967.

[25] LaBounty, J. F., and J. J. Sartoris, *Assessment of the Effects of Mt. Elbert Pumped-Storage Powerplant Operation on the Ecology of Twin Lakes, Colorado – 1977 Annual Report*, Applied Sciences Referral No. 78-2-6, March 17, 1978.

[26] LaBounty, J. F., J. J. Sartoris, S. G. Campbell, J. R. Boehmke, and R. A. Roline, *Studies of the Effects of Operating the Mt. Elbert Pumped-Storage Powerplant on Twin Lakes, Colorado: 1979 Report of Findings*, Water and Power Resources Service Report* No. REC-ERC-80-7, 66 pp., Denver, CO, 1980.

* From November 1979 to May 1981, the Bureau of Reclamation was known as the Water and Power Resources Service.

APPENDIX A

APPLIED SCIENCES REFERRAL MEMORANDUM NO. 82-2-2, "INVESTIGATION OF POTENTIAL ERRORS IN MEASUREMENTS OF CHLOROPHYLL PIGMENTS – TWIN LAKES LIMNOLOGY STUDY," S. G. CAMPBELL, 1981

OPTIONAL FORM NO. 10
JULY 1973 EDITION
GSA FPMR (41 CFR) 101-11.6

UNITED STATES GOVERNMENT

Memorandum

Memorandum

TO : Chief, Applied Sciences Branch

Denver, Colorado
DATE: October 14, 1981

FROM : Head, Environmental Sciences Section

SUBJECT: Investigation of Potential Errors in Measurements of Chlorophyll Pigments - Twin Lakes Limnology Study

Applied Sciences Referral No. 82-2-2

Investigations by: S. G. Campbell

INTRODUCTION

Limnological studies have been ongoing at Twin Lakes for the past 9 years as part of the preoperations phase of the effects of pumped storage on the ecology of these lakes (DR-331). One of the biological parameters monitored on a regular basis has been primary productivity expressed as concentrations of chlorophyll in mg/m^3. This measurement of chlorophyll, especially chlorophyll a, is widely used to classify ecosystems into trophic states [1]*. This provides biologists with a way to compare different lake ecosystems according to their trophic category.

During a 6-month period, beginning in June 1978 and ending in November, a strange phenomenon was observed in chlorophyll data from Twin Lakes. The relative ratio of chlorophyll a to chlorophyll c, which had been about 1:1, had shifted to a ratio of about 1:2, or even 1:3. These data seem to indicate that a trophic shift was occurring at Twin Lakes. The lakes are usually categorized as oligotrophic (low productivity) [1]. The increase in chlorophyll c concentrations would normally be associated with ultraeutrophic (high productivity) or senescent ecosystems. However, none of the other biological parameters monitored at Twin Lakes corroborated a trophic shift. It was decided that an error of some kind was occurring, either in field collection or laboratory processing of chlorophyll samples from Twin Lakes.

Investigation of field collection procedures and laboratory processing techniques identified several possible sources of error in the results of chlorophyll estimations during the period when the anomaly was observed.

1. Technical error in the operation of the spectrophotometer used to process extracted samples
2. Preservatives used during field collection of chlorophyll samples
3. Exposure of extracted samples to indoor fluorescent lighting

The goals of this study were to identify the source or sources of these problems and make the necessary corrections.

---

* Numbers in brackets refer to literature cited at end of this report.

MATERIALS AND METHODS

Samples for experimental analysis on the effect of preservation additives and light exposure were collected at Twin Lakes, Colorado, in the following manner:

Five gallon carbuoys (19.0 L) of surface water were collected from the lower lake and filtered in 800-, 750-, or 500-mL increments. Additional samples were collected for experimental analysis on November 2 and 16, 1977 January 11, and February 20, 1978.

A laboratory culture of Selenastrum cultured in a 38-L (10-gal) aquarium was also utilized as a source of chlorophyll samples. Fifty-mL increments from this culture were filtered on February 6 and 12, 1979.

RESULTS AND DISCUSSION

The standard procedure for chlorophyll analysis is based on methods described by Strickland and Parsons [2] with some modifications. A detailed outline of this procedure is found in appendix A. The first possible source of error studied was in the operation of the spectrophotometer during laboratory processing of extracted samples. Extracted chlorophyll pigments are subsampled by a clinical sipper attachment which introduces about 1 mL of extract into a flow cell inside the spectrophotometer. Light is passed through the extract and compared to a blank or a standard which is usually filled with 90 percent acetone. The difference between the amount of light which passes through the extract and the blank is its absorbance value. Chlorophyll extracts are generally read at 663, 645, and 630 nanometer settings to quantify the absorbance of the extracts at points which correspond with observed maximums for chlorophylls a, b, and c, respectively. Correct operation of the spectrophotometer prior to recording readings at these wavelength settings requires that the machine be "zeroed" at a wavelength setting of 700 nanometers after the chlorophyll extract is introduced into the flow cell. This removes background interference present in a natural algal population due to such things as silt, debris, and various organic substances dissolved in natural waters. At Twin Lakes, this was found to result in an average absorbance value of about 0.010 increase at 663 nanometers if the zeroing of the instrument was not performed. The combination of the 0.005 tolerance specifications for the instrument and the error caused by not removing background interference resulted in an overestimation of absorbance at 645 and 630 nanometers of up to 0.015 units. When chlorophyll estimations are calculated from these erroneous absorbance readings, it results in chlorophyll c concentration data which are too high by a factor of two to three times. Correction of this error in instrument operation did not completely solve the problem. The estimate of chlorophyll c biomass still seemed to be higher than chlorophyll a about 50 percent of the time.

The next possible error which could affect chlorophyll data was the manner in which samples were collected and processed in the field. Prior to November 1978, water to be filtered for extraction of chlorophyll pigments had about 5 mL of magnesium carbonate solution added to each 1.9-L container at the time of

collection. The purpose of this treatment was to prevent degradation of active pigments into their associated phaeophytins. Presence of large amounts of phaeophytin pigments tends to mask absorbance at 663, 645, and 630 nanometer settings and result in an underestimation of chlorophyll concentrations. Recent literature [3] suggests that addition of this preservative is unnecessary if samples are processed within 3 weeks of collection, and they are maintained at 0 °C in the interim.

Procedures recommended by Strickland and Parsons [2] suggest prewetting fiberglass filters with 1 mL of magnesium bicarbonate solution or adding it to the final amount of water passed through each filter. If samples were stored for longer than 3 weeks prior to extraction (table 1), preservation by addition of magnesium carbonate solution to the filter before filtering water for chlorophyll analysis would seem to give the best results. However, addition of a preservative does not seem to benefit initial, short-term storage samples. Chlorophyll a from samples which had no preservative were about 14 percent higher than those which had been preservative treated if processed within 2 to 3 weeks (table 2) after collection.

The only unfortunate result of this analysis is that it still did not solve the problem of overestimation of chlorophyll c concentrations. Strickland and Parsons [2] have a note in the procedure for chlorophyll analysis which mentions the effect of bright daylight on extracted chlorophyll pigments. The note suggests reduced light be used throughout the analysis procedure as a significant amount of chlorophyll, especially chlorophyll a, is destroyed within 30 minutes of exposure. Our procedure was to cover chlorophyll samples with a foil lid to prevent evaporation of the 90 percent acetone extractive medium. Extraction takes 18 to 20 hours, and occurs in a refrigerator, so exposure had to be occurring during the spectrophotometer phase of sample analysis. Samples had been allowed to stand alongside the spectrophotometer during analysis for periods of up to several hours. Table 3 summarizes data from experimental exposure to indoor fluorescent lighting. Loss of chlorophyll a begins to occur within 15 minutes and becomes significant in about 30 minutes at an average light level of 1.0 lux.

The average loss of chlorophyll a during the experiment was slightly different at each station. Chlorophyll samples from lower Twin (station 2) had an average decline in chlorophyll a of about 25 percent within 30 minutes of initial light exposure (fig. 1). Samples collected from upper Twin (station 4) showed a 29 percent average decline in chlorophyll a in 30 minutes of light exposure (fig. 2).

CONCLUSION

Three possible sources for the observed error in the ratio of cholorophyll a/c were studied. These are: (1) technical error in the operation of the spectrophotometer used to process extracted pigment samples, (2) preservatives used during field collection of chlorophyll samples, and (3) exposure of extracted samples to indoor fluorescent lighting.

Spectrophotometer operation error was found to have significant effects on estimations of chlorophyll c biomass and the ratio of chlorophyll a/c. This

error can be minimized by proper "zeroing" of the instrument during laboratory processing of extracted chlorophyll pigments.

The addition of preservatives to chlorophyll samples may decrease estimation of chlorophyll a biomass if the time between collection and processing is less than 3 weeks. An average decrease in chlorophyll a of about 14 percent was observed in relicate samples processed within a few days of collection. If chlorophyll samples are held for longer than 3 weeks, the best results were found in samples which were preserved by pretreating filters with 1 ml of magnesium carbonate solution.

Exposure of extracted pigments to indoor fluorescent lighting resulted in a 25-percent decrease in estimated chlorophyll a biomass within 30 minutes. The longer extracted pigments are exposed to light, the greater the decomposition. It is recommended that reduced lighting be used throughout the chlorophyll analysis procedure.

Campbell 10/19/81

Copy to: D-915
D-1522
D-1522 (Campbell)

Table 1. - Effect of preservatives on chlorophyll samples from Twin Lakes, Colorado
(Samples extracted and read May 14, 1979)

Group	Replicate number	Volume filtered (mL)	Sample collection date	Location of collection	Chl a (mg/m^3)	Chl b (mg/m^3)	Chl c (mg/m^3)	Chl a (Mean)
Control No preservative	1	750	1-11-79	Twin Lakes, station 2	4.32	0.39	1.38	
	2				3.72	0.41	1.12	3.96
	3				3.83	0.78	2.09	
$MgCO_3$ treated filters	1				5.79	0.74	2.10	
	2				5.79	0.74	2.10	5.74
	3				5.64	0.80	2.16	
$MgCO_3$ added to water	1				2.84	0.90	1.41	
	2				2.96	0.42	1.64	2.92
	3				2.96	0.42	1.64	
Control No preservative	1	50	1- 5-79	Laboratory culture of *Selenastrum* sp.	135.99	14.52	45.19	
	2				128.93	20.08	34.98	135.37
	3				141.18	25.85	44.11	
$MgCO_3$ treated filters	1				164.77	21.73	43.96	
	2				154.77	20.08	49.15	159.24
	3				158.08	25.85	53.12	
$MgCO_3$ added to water	1				112.88	7.22	41.74	
	2				119.45	10.82	34.00	121.87
	3				131.23	18.77	39.55	

Table 2. - Effect of preservatives on chlorophyll samples from a laboratory culture of *Selenastrum capricornutum* (samples run January 5, 1979)

		a	b	c
Selenastrum culture	Control 50 mL	22.8	3.3	5.0
		24.5	7.0	8.3
		24.8	3.3	5.0
		24.8	3.3	5.0
		29.2	4.8	7.7
	$MgCO_3$ + filter	22.7	0.7	1.9
		20.4	1.8	2.2
		24.8	3.3	5.0
		20.4	1.8	2.2
		20.1	5.5	5.6
	$MgCO_3$ + H_2O	18.0	2.9	2.6
		22.7	0.7	1.9
		20.4	1.3	7.2
		22.4	4.9	0.4
		22.4	4.9	0.4

Control average = 25.2 *
$MgCO_3$ + filter average = 21.7
$MgCO_3$ + H_2O average = 21.2

* Sample average is highest if samples are run within 2 weeks.

Table 3. - Effect of fluorescent light exposure on extracted pigments

	Preservation method	Time of exposure (minutes)	Absorbance (nanometers) 665	645	630	Time of exposure (minutes)	Absorbance (nanometers) 665	645	630
1.	None	0	0.017	0.008	0.008	60	0.014	0.007	0.006
2.	$MgCO_3$ filter	0	0.015	0.008	0.007	60	0.013	0.006	0.006
3.	$MgCO_3$ H_2O	0	0.016	0.006	0.006	60	0.015	0.007	0.006
4.	None	15	0.015	0.005	0.004	120	0.010	0.002	0.001
5.	$MgCO_3$ filter	15	0.012	0.005	0.004	120	0.008	0.003	0.003
6.	$MgCO_3$ H_2O	15	0.016	0.006	0.006	120	0.012	0.007	0.006
7.	None	30	0.016	0.006	0.006	180	0.011	0.005	0.006
8.	$MgCO_3$ filter	30	0.014	0.006	0.006	180	0.007	0.003	0.003
9.	$MGCO_3$ H_2O	30	0.017	0.007	0.006	180	0.007	0.004	0.004
10.	None	45	0.017	0.007	0.008	240	0.008	0.004	0.004
11.	$MgCO_3$ filter	45	0.015	0.008	0.007	240	0.007	0.004	0.004
12.	$MgCO_3$ H_2O	45	0.020	0.009	0.008	240	0.007	0.006	0.006
13.	None	0	0.012	0.005	0.004	60	0.009	0.003	0.003
14.	$MgCO_3$ filter	0	0.008	0.004	0.004	60	0.006	0.003	0.003
15.	$MgCO_3$ H_2O	0	0.012	0.005	0.004	60	0.009	0.004	0.003
16.	None	15	0.012	0.004	0.003	120	0.006	0.001	0.001
17.	$MgCO_3$ filter	15	0.010	0.005	0.004	120	0.006	0.003	0.003
18.	$MgCO_3$ H_2O	15	0.011	0.005	0.004	120	0.005	0.002	0.003
19.	None	30	0.011	0.005	0.004	180	0.006	0.003	0.003
20.	$MgCO_3$ filter	30	0.008	0.003	0.003	180	0.005	0.003	0.003
21.	$MgCO_3$ H_2O	30	0.012	0.006	0.006	180	0.004	0.003	0.003
22.	None	45	0.010	0.005	0.004	240	0.005	0.003	0.003
23.	$MgCO_3$ filter	45	0.007	0.004	0.004	240	0.002	0.001	0.001
24.	$MgCO_3$ H_2O	45	0.010	0.004	0.004	240	0.003	0.002	0.002

EFFECT OF FLUORESCENT LIGHT ON EXTRACTED CHLOROPHYLL PIGMENTS

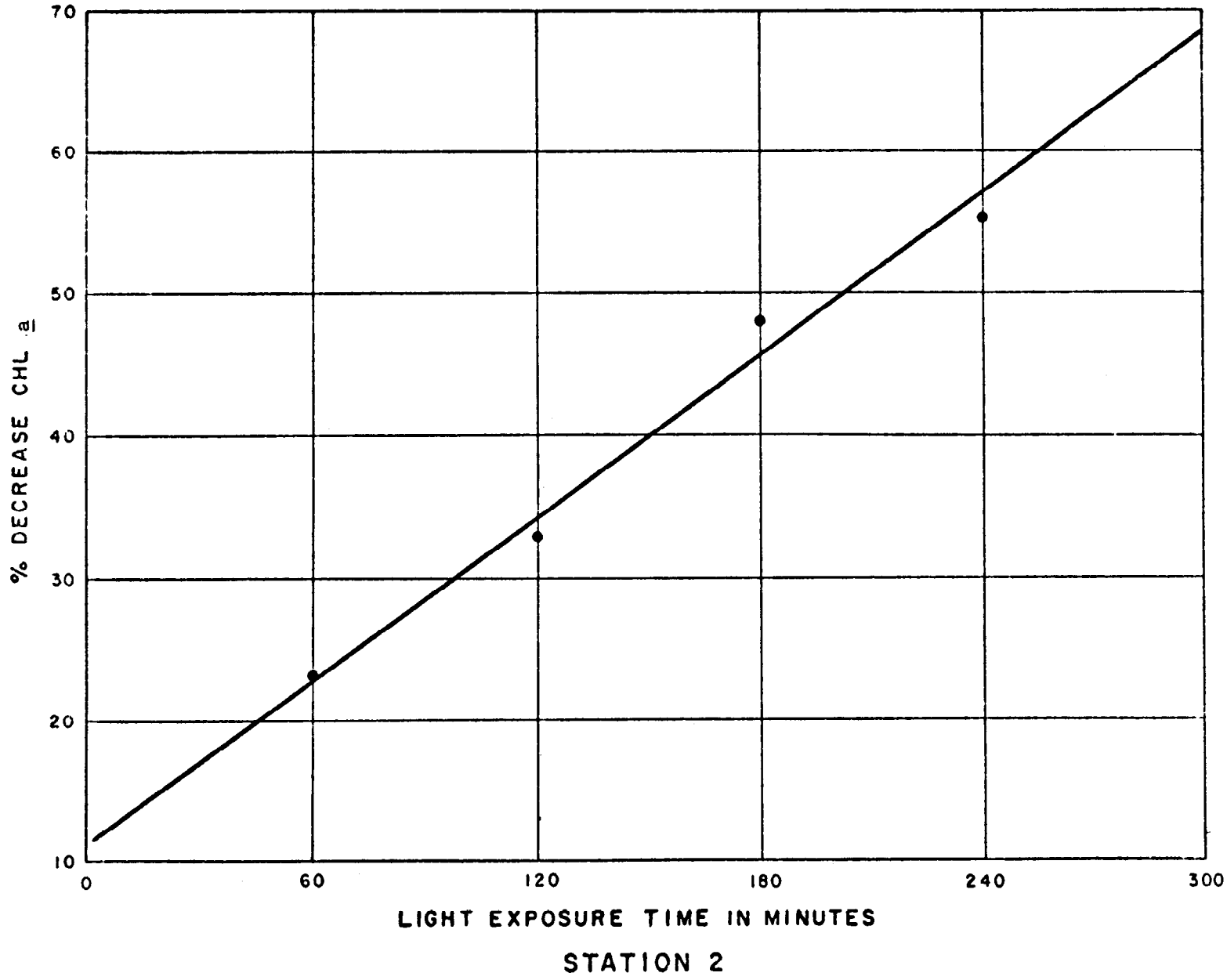

STATION 2

FIGURE-1

EFFECT OF FLUORESCENT LIGHT ON EXTRACTED CHLOROPHYLL PIGMENTS

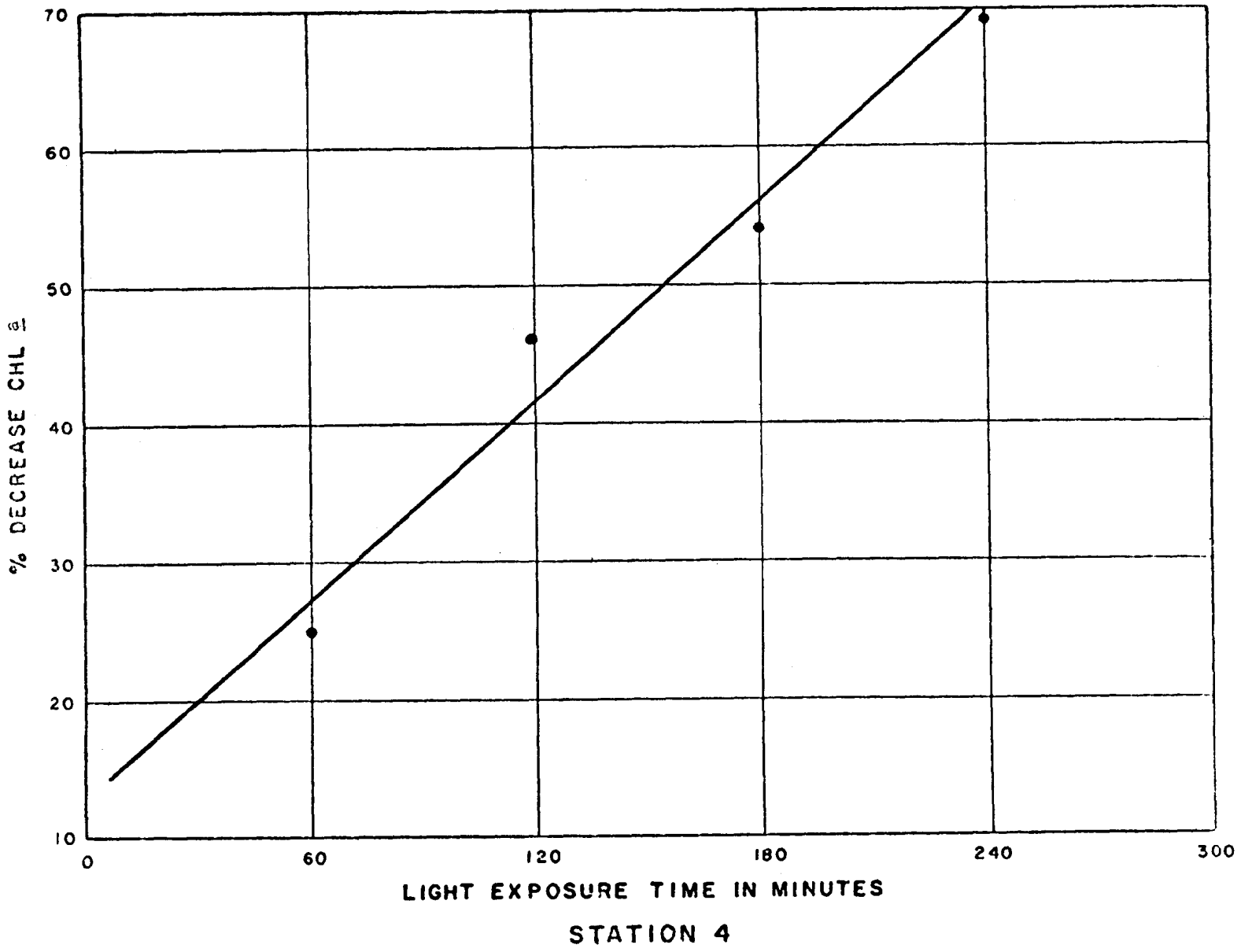

STATION 4

FIGURE-2

LITERATURE CITED

[1] Lieth, H., and R. W. Whittaker, Primary Productivity of the Biosphere, 339 pp., Springer-Verlag, New York, New York, 1975

[2] Strickland, J.D.H., and T. R. Parsons, A Practical Handbook of Seawater Analysis, 310 pp., Fisheries Research Board of Canada, Ottawa, 1972

[3] Holm-Hansen, O., and B. Riemann, "Chlorophyll a Determination: Improvements in Methodology," OIKOS, 30:438-447, 1978

APPENDIX A

Laboratory procedure for chlorophyll analysis 1/.

1. Count and sort chlorophyll samples in descending order from 0.1 to 15.0 meters.

2. Record sample origin, sample collection date, volume of water filtered, and depth interval of each sample in laboratory notebook and return to freezer.

3. Prepare sufficient 90 percent acetone* extraction solution to process (10 mL for each sample, plus 100 mL for blank, flushing of spectrophotometer, etc.).

4. Fill the requisite number of test tubes with 10 mL each of the 90 percent acetone extraction solution.

5. Place test tubes in freezer for at least 30 minutes prior to beginning extraction.

6. After 30 minutes, put each filter in a test tube and fragment with a narrow spatula, distributing fragments fairly evenly throughout the 90 percent acetone solution.

7. Cap each tube and place in the refrigerator for 18 to 20 hours to allow maximum pigment extraction.

8. After extraction, remove from refrigerator and centrifuge each test tube at 2,000 r/min for 60 seconds to compact filter particulates in the bottom of the tube.

9. Turn the Beckman spectrophotometer on and allow the instrument to warm up for at least 10 minutes prior to processing extracted pigments.

10. Fill the blank cuvette with 90 percent acetone and flush the flow cell with about 25 mL of 90 percent acetone until the digital readout falls to a low value.

11. Scan backward from 700 nanometers to 600 nanometers to verify that the reading does not increase more than 0.001 units.

1/ ALL ANALYSIS TO BE PERFORMED UNDER REDUCED LIGHTING, INCLUDING BOTH EXTRACTION SETUP AND SPECTROPHOTOMETER PROCESSING.

* Ninety percent acetone should be freshly prepared with each sample setup. The water content of the solution tends to increase through time as the acetone portion of the solution evaporates more quickly than the water portion. Only spectrograde acetone should be used since it is most nearly water free and allows a more precise 90 percent solution to be made.

12. Place a tube under the clinical sipper and push the pressure plate behind the Teflon tubing. Approximately 1 mL of extracted pigment solution will be drawn up into the flow cell inside the instrument by the perisaltic pump.

13. Zero the machine at 700 nanometers after each sample is "sipped." This removes background interference from silt, dissolved substances, etc., in extracted solution.

14. Record the reading at 663, 645, and 630 nanometer settings for each extracted sample.

15. Flush the instrument with 25 mL of distilled water after each use to prevent flow cell contamination and collapse of the rubber tubing on the perisaltic pump.

16. Discard test tubes and contents.

APPENDIX B

CHLOROPHYLL *a* CONCENTRATIONS (mg/m^3) IN TWIN LAKES, COLORADO FROM 1974 THROUGH 1981

APPENDIX B

Chlorophyll a concentrations (mg/m^3) in Twin Lakes, Colorado, from 1974 through 1981

Date	Station	0.1 m	1.0 m	3.0 m	5.0 m	9.0 m	15.0 m	Areal chlorophyll a (mg/m^2)
07-28-74	2		1/2.18		1/2.18			2.01
	4		1/1.60		1/6.10			3.54
08-28-74	2		1/3.10		1/7.39	1/27.65		28.29
	4		1/2.03		1/7.39			5.75
09-24-74	2		1/4.37		1/4.35			4.01
	4		1/7.40		1/10.78			8.36
10-24-74	2		1/5.37		1/5.37			6.55
	4		1/8.69		1/8.69			10.60
11-20-74	2		1/4.35		1/4.35			5.31
	4		1/4.35		1/4.35			5.31
07-08-75	2	2.01	2.10	3.34		1.05		4.09
	4	0.03	0.07	0.00		0.28		0.29
07-24-75	2	0.67	2.74	1.95	7.83	1.27		6.84
	4	2.84	0.50	0.96	0.82	0.38		1.43
08-13-75	2	3.38	3.85	3.81	4.35	5.62		7.80
	4	0.77	1.11	0.99	2.82	0.84		2.82
09-04-75	2	2.18			1/2.62	1/6.49		4.81
	4	1.84			1/1.95	1/0.47		3.58
09-25-75	2	3.07	3.65	4.09	4.02	6.49	3.02	13.69
	4	2.27	2.55	3.03	2.94	4.37	2.12	9.56
10-08-75	2	5.02	4.87	5.07	5.39	4.62	5.05	14.78
	4	3.90	3.62	5.49	3.56	3.54	4.02	11.69
10-21-75	2	4.10	3.49	3.48	3.62	4.95	4.77	12.76
	4	3.05	3.33	3.58	4.01	4.32	4.97	12.38
11-05-75	2	2.75	2.79	3.43	4.14	1.23	2.51	7.65
	4	1.51	3.07	5.17	4.84	4.99	4.53	13.71
11-19-75	2	3.81	3.75	3.48	3.24	3.41	3.76	10.43
	4	4.75	5.11	5.27	5.10	5.72	5.47	16.08
12-18-75	2	3.76	3.40	3.89	3.75	3.58	3.62	10.88
	4	4.05	5.53	6.82	6.42	6.14	5.67	18.09
02-11-76	2	5.25	5.12	4.70	4.81	4.38	2.79	12.78
	4	4.41	6.92	5.92	3.75	2.79	1.66	10.81
03-23-76	2	0.92	0.91		3.77		0.91	6.72
	4	0.55	0.89		0.96		0.54	2.37
05-19-76	2	1.32	1.87	1.82	2.17	2.29	3.22	6.91
	4	2.39	2.39	2.17	2.63	2.42	1.86	6.89
06-15-76	2		2.29	2.65	2.54			2.03
	4	0.29	0.42	0.29				0.21
08-10-76	2	1.82	1.89	1.96	2.09	9.26	1.02	12.62
	4	1.40	1.98	1.78	1.87	1/0.73	0.00	3.45
10-06-76	2	1.69	3.22	4.30	4.48	4.27	4.54	12.49
	4	3.30	2.86	2.75	2.56	2.23	0.78	6.46

1/ Sampled at various depths, but closest to depth indicated.

APPENDIX B

Chlorophyll a concentrations (mg/m^3) in Twin Lakes, Colorado, from 1974 through 1981 - continued

Date	Station	0.1 m	1.0 m	3.0 m	5.0 m	9.0 m	15.0 m	Areal chlorophyll a (mg/m^2)
01-13-77	2	1.94	2.24	2.43	2.69		2.22	72.4
	4	3.51	3.77	3.83	3.78	3.92	2.95 1/	129.6
02-17-77	2	1.69	2.23	3.00	2.88	3.52	2.30	86.3
	4	4.82	8.07	7.14	7.26	6.17	2.44	176.2
03-17-77	4	2.28	5.19	9.08	3.33	1.58	1.14	96.0
04-19-77	4		0.98		3.93		1.25	71.4
05-16-77	2	1.20	1.12	0.95	1.20	1.14	0.85	31.8
	4	1.98	1.65	1.92	1.85	1.66	1.53	51.1
05-23-77	2	1.08	0.95	1.08	1.22	0.94	1.21	32.0
	4	2.70	2.92	3.15	3.41	2.69	1.72	81.2
06-29-77	2	1.54	1.61	3.28	2.68	2.39	1.24	33.9
	4	1.53	1.65	7.23	1.51	3.34	0.15	40.0
07-11-77	2	2.78	2.04	2.70	2.89	3.45	2.40	44.7
	4	7.01	7.74	8.82	18.08	11.78	0.26	148.8
07-26-77	2	1.76	1.85	2.08	2.14	2.67	1.75	33.5
	4	3.08	5.40	6.45	13.55	4.12	0.60	95.9
08-11-77	2	1.03	1.11	1.19	1.97	1.47	1.19	20.8
	4	2.19	2.60	2.74	3.21	4.22	0.90	44.4
08-22-77	2	2.87	2.74	2.80	2.53	2.85	1.78	38.7
	4	2.65	2.68	2.16	1.95	4.85	0.77	45.2
09-08-77	2	1.65	1.60	1.79	1.61	2.68	4.45	38.4
	4	2.17	1.76	1.49	0.75	1.49	1.65	20.8
09-19-77	2	2.38	1.95	1.69	2.17	2.44	2.51	33.8
	4	1.96	2.10	2.04	1.90	2.14	2.59	32.7
10-06-77	2	3.08	2.79	3.15	3.07	3.03	3.32	46.0
	4	2.49	2.50	2.48	2.47	2.43	2.28	36.1
10-19-77	2	2.24	1.83	2.73	3.20	4.26	4.01	52.9
	4	2.89	2.08	2.56	2.32	2.91	2.12	37.3
11-03-77	2	2.79	2.84	4.57	4.50	4.09	4.58	63.3
	4	1.87	2.05	2.06	2.27	1.86	2.11	30.9
11-15-77	2	3.25	3.02	2.96	3.16	2.95	3.50	47.3
	4	2.96	2.53	2.53	2.40	2.59	2.58	38.0
12-21-77	2	4.13	13.13	3.29	3.85	2.99	1.51	59.3
	4	6.09	5.06	4.92	3.79	3.50	2.30	56.3
01-05-78	2	6.82	6.38	3.49	3.45	2.59	0.84	45.1
	4	12.04	4.34	3.35	3.63	3.47	2.34	53.7
01-19-78	2	4.18	5.62	2.04	2.12	1.98	0.95	33.2
	4	8.42	3.03	1.97	2.40	2.18	0.67	32.3
02-02-78	2	2.61	2.46	2.18	2.25	2.12	0.76	28.7
	4	36.72	12.17	2.17	1.97	2.23	0.87	116.4
02-15-78	2	2.27	1.91	2.41	2.32	1.81	0.75	26.8
	4	2.68	2.75	2.40	2.12	2.05	0.83	29.1
03-07-78	2	2.98	3.47	2.91	2.57	2.06	0.70	32.3
	4	7.12	4.91	4.26	4.20	1.90	0.61	42.8

APPENDIX B

Chlorophyll a concentrations (mg/m^3) in Twin Lakes, Colorado, from 1974 through 1981 - continued

Date	Station	0.1 m	1.0 m	3.0 m	5.0 m	9.0 m	15.0 m	Areal chlorophyll a (mg/m^2)
03-21-78	2	0.93	1.08	1.95	1.96	1.94	0.58	23.2
	4	1.59	1.79	1.79	1.65	1.39	0.22	119.5
04-04-78	2	1.51	1.66	1.58	1.58	1.59	1.59	23.7
	4	1.65	1.72	1.52	1.57	1.66	1.72	24.5
04-19-78	2	1.13	1.55	2.35	2.30	2.63	2.35	34.6
	4	1.42	2.79	3.69	3.30	3.20	3.42	48.2
05-15-78	2	1.23	0.77	1.01	1.56	1.71	1.27	20.7
	4	1.83	1.77	2.69	2.94	4.08	3.30	47.9
06-06-78	2	2.93	2.85	2.34	4.35	4.91	5.06	62.9
07-05-78	2	3.64	3.64	2.78	5.19	1/5.34	1/3.06	64.0
	4	1.07	0.85	2.71	1.50	1/0.42	1/0.00	13.8
08-17-78	2	13.18	4.77	2.64	6.41	4.27	6.05	76.9
	4	1.07	2.64	1.36	3.77	8.34	1.50	64.6
10-05-78	2	3.64	4.56	5.19	5.13	4.35	4.56	69.4
	4	3.41	3.35	5.92	4.49	4.06	4.07	64.2
11-01-78	2	4.57	5.11	5.84	7.40	5.95	6.00	91.1
	4	1.69	3.24	3.46	3.81	3.33	3.17	50.0
11-02-78	2	4.88	4.55	5.11	5.25	5.62	5.50	79.3
	4	2.79	2.88	3.70	3.32	2.97	2.60	45.5
11-15-78	2	3.20	3.22	5.97	5.68	6.09	4.76	79.8
	4	2.92	3.03	4.26	4.74	4.43	4.48	64.0
11-29-78	2	4.43	4.27	4.64	4.54	4.63	4.62	68.1
	4	4.50	4.49	4.35	4.61	4.63	4.28	67.1
12-18-78	2	5.24	5.09	4.82	4.89	4.73	3.95	69.6
	4	3.95	6.08	6.11	6.25	6.09	1.24	76.8
01-10-79	2	3.26	3.88	3.60	3.89	2.94	1.18	44.2
	4	4.10	6.58	6.58	4.81	4.57	0.89	64.5
01-31-79	2	2.00	2.62	2.36	2.01	1.20	0.50	23.0
	4	0.50	0.99	1.27	1.21	1.12	0.55	15.1
02-20-79	2	2.15	2.42	2.85	2.03	1.41	1.38	27.5
	4	1.33	2.07	1.06	1.13	0.86	0.64	15.4
03-12-79	2	3.21	3.61	3.97	3.50	2.40	0.83	39.6
	4	0.95	0.84	0.83	0.96	0.61	0.61	11.1
04-04-79	2	2.19	1.62	2.63	2.83	1.28	0.49	25.0
	4	0.28	0.28	0.06	0.00	0.15	0.14	1.8
04-19-79	2	2.76	2.63	2.74	2.88	2.60	2.80	40.6
	4	0.76	0.70	0.73	0.74	0.79	0.59	10.8
05-16-79	2	2.49	2.86	3.77	3.90	4.05	4.04	56.9
	4	1.06	1.18	1.17	1.44	1.43	1.37	20.1
06-05-79	2	2.03	2.24	4.58	4.73	5.59	4.71	69.6
	4	0.78	0.86	1.02	1.25	0.71	0.58	12.7
06-20-79	2	3.64	4.18	4.96	5.47	4.94	3.32	68.7
	4	0.21	0.29	0.35	0.35	0.35	0.34	5.1
07-05-79	2	2.61	3.16	8.94	7.70	2.46	1.92	64.8
	4	0.45	0.45	0.73	0.66	0.44	0.51	8.1

APPENDIX B

Chlorophyll a concentrations (mg/m^3) in Twin Lakes, Colorado, from 1974 through 1981 - continued

Date	Station	0.1 m	1.0 m	3.0 m	5.0 m	9.0 m	15.0 m	Areal chlorophyll a (mg/m^2)
07-18-79	2	7.44	6.83	7.67	5.97	3.70	1.31	68.9
	4	0.92	0.93	1.24	1.84	0.72	0.49	14.9
08-02-79	2	2.64	3.24	4.37	4.90	52.18	1.98	296.2
	4	0.95	1.10	1.49	1.72	4.96	0.83	37.4
08-13-79	2	3.00	3.09	3.46	3.78	9.57	1.36	76.0
	4	1.78	1.70	2.55	4.21	6.16	0.92	54.5
09-06-79	2	1.11	1.40	1.96	3.33	2.41	1.63	33.7
	4	1.03	1.18	1.25	1.25	2.94	0.86	25.7
09-19-79	2	2.27	1.98	2.35	2.57	3.10	1.87	37.4
	4	0.95	1.26	0.74	1.18	2.03	0.75	19.6
10-10-79	2	5.08	5.22	4.96	5.37	5.37	6.22	81.4
	4	2.60	2.37	2.88	2.76	2.30	3.50	40.7
11-05-79	2	6.14	6.06	5.85	6.14	6.52	6.30	93.2
	4	2.95	3.09	3.25	3.32	3.17	3.32	48.0
11-29-79	2	3.88	4.25	4.63	4.92	4.93	5.31	72.5
12-17-79	2	5.68	5.35	5.22	5.06	5.21	5.44	78.3
	4	1.65	2.12	2.23	2.24	2.33	2.18	33.2
01-09-80	2	4.08	5.55	4.23	5.99	6.28	6.48	87.2
	4	1.80	2.86	2.17	2.10	2.03	1.39	29.2
02-13-80	2	4.59	5.53	3.44	2.04	0.95	1.43	32.1
	4	2.94	0.84	0.75	0.86	0.77	0.77	12.8
03-11-80	2	1.95	2.94	2.10	1.56	1.19	1.03	23.1
	4	0.76	1.05	1.45	0.87	0.64	0.64	12.5
04-14-80	2	3.44	2.98	1.83	1.05	0.99	0.60	19.4
	4	1.53	1.29	0.91	0.46	0.39	0.38	8.8
05-19-80	2	2.05	2.06	2.06	2.14	2.14	1.99	31.1
	4	1.55	1.36	1.28	1.29	1.35	1.37	20.0
06-11-80	2	1.98	1.98	2.14	2.74	2.90	3.59	41.5
	4	1.52	1.60	2.05	0.97	0.91	0.84	17.1
07-14-80	2	2.85	2.84	2.92	3.13	2.91	1.25	38.9
	4	0.95	0.94	1.02	2.55	0.50	0.27	14.8
08-11-80	2	1.71	1.79	1.87	1.78	3.61	3.69	40.6
	4	2.09	1.87	2.25	3.33	6.83	0.89	55.0
09-08-80	2	1.62	2.00	1.99	2.07	2.39	6.55	45.4
	4	2.30	2.31	4.20	18.29	3.20	0.94	86.5
09-24-80	2	3.22	3.28	3.20	3.21	3.21	3.28	48.2
	4	7.94	7.95	8.02	8.18	7.87	1.69	100.8
10-08-80	2	1.96	1.97	2.14	2.29	3.90	2.99	43.3
	4	7.09	7.17	15.08	11.15	2.37	1.31	93.0
10-21-80	2	2.74	2.89	3.58	3.72	3.58	3.58	52.4
	4	4.16	6.79	6.95	7.40	7.93	5.32	103.4
11-03-80	2	4.14	4.13	4.13	4.12	4.12	4.25	61.8
	4	5.72	6.51	6.55	6.41	6.84	6.91	99.3
11-19-80	2	4.89	4.97	6.13	4.97	5.26	4.40	76.1
	4	7.32	7.70	8.22	9.22	8.27	7.55	32.9

APPENDIX B

Chlorophyll a concentrations (mg/m^3) in Twin Lakes, Colorado, from 1974 through 1981 - continued

Date	Station	0.1 m	1.0 m	3.0 m	5.0 m	9.0 m	15.0 m	Areal chlorophyll a (mg/m^2)
01-07-81	2	1.96	3.17	3.85	4.07	3.85	3.70	55.7
	4	2.26	5.20	5.04	5.06	4.82	4.30	70.8
02-04-81	2	3.17	5.20	5.43	5.73	4.98	4.15	74.3
	4	3.70	7.84	8.44	8.30	2.94	2.26	76.3
03-02-81	2	2.49	3.17	3.32	3.01	4.67	5.43	61.0
	4	2.49	3.17	3.85	4.37	4.60	2.34	56.6
04-01-81	2	1.73	2.04	2.18	2.64	2.56	1.89	34.5
	4	1.20	1.44	2.04	2.26	1.20	1.36	23.6
04-15-81	2	1.81	1.81	2.04	2.26	3.62	3.47	42.6
	4	1.36	1.36	2.26	3.17	3.54	2.49	41.8
04-30-81	2	1.37	1.89	2.27	2.14	2.37	2.21	32.8
	4	1.46	1.37	1.44	1.59	1.74	1.98	24.9
05-20-81	2	2.88	2.80	2.65	2.59	2.76	2.75	40.5
	4	2.06	2.15	2.36	2.45	2.43	2.43	35.6
06-01-81	2	2.05	2.06	2.28	2.29	2.58	4.09	40.5
	4	1.61	1.52	2.96	3.80	2.96	1.74	40.3
06-24-81	2	2.16	2.40	2.45	3.45	4.84	4.23	56.6
	4	1.56	1.22	1.83	3.45	1.01	0.54	23.1
07-08-81	2	1.97	1.98	1.90	2.20	5.03	4.11	51.7
	4	2.21	2.20	2.36	3.65	2.14	0.29	31.5
07-22-81	2	2.22	2.06	2.13	2.60	4.88	3.20	50.1
	4	3.90	3.94	4.58	5.58	14.41	0.45	106.8
08-05-81	2	1.14	1.66	1.90	2.44	3.37	1.83	36.4
	4	1.81	1.90	3.11	11.58	17.62	8.37	157.7
08-18-81	2	1.48	1.74	1.46	1.91	2.37	2.22	30.4
	4	1.14	2.15	3.60	3.90	15.56	1.07	103.6
09-02-81	2	2.51	2.29	2.05	1.83	3.50	2.49	39.0
	4	1.57	2.13	3.39	2.97	27.19	1.13	158.9
09-16-81	2	1.83	2.35	2.80	2.05	3.87	1.88	41.0
	4	2.34	3.02	4.50	6.12	5.74	1.83	67.0
09-29-81	2	1.45	2.34	2.87	2.70	1.49	2.94	34.2
	4	3.35	3.42	3.72	3.95	4.02	1.28	49.7
10-14-81	2	4.13	4.12	4.17	4.12	5.32	5.01	70.1
	4	3.41	3.50	3.89	4.25	3.88	3.88	58.2
10-38-81	2	4.73	5.10	4.87	4.87	5.08	5.39	75.5
	4	4.27	4.27	4.41	4.42	4.58	4.48	66.5
11-11-81	2	3.86	4.17	4.70	4.26	4.02	5.10	65.4
	4	2.58	3.81	4.55	4.40	4.61	4.44	65.3

TWIN LAKES, COLO. – BUREAU OF RECLAMATION LIMNOLOGY REPORTS

REC-ERC-

76-12 ***Studies of the Benthic Environment of Twin Lakes, Colorado,*** LaBounty, James F., ed.

76-14 ***Ecology of*** Mysis Relicta ***in Twin Lakes, Colorado,*** Greg, Ronald E., (Colorado Cooperative Fishery Unit, CSU, Ft. Collins)

76-15 ***Dive Studies at Twin Lakes, Colorado, 1974-75,*** LaBounty, J.F., R.A. Crysdale, and D.W. Eller.

77-4 ***The Lake Trout of Twin Lakes, Colorado,*** Griest, John R. (Colorado Cooperative Fishery Research Unit, CSU, Ft. Collins)

77-13 ***Historical, Physical, and Chemical Limnology of Twin Lakes, Colorado,*** Sartoris, J.J., J.F. LaBounty, and H.D. Newkirk.

79-17 ***Movements of Lake Trout in Twin Lakes, Colorado, in Relation to the Mt. Elbert Pumped-Storage Powerplant,*** Walch, Leonard A. (Colorado Cooperative Fishery Research Unit, CSU, Ft. Collins)

80-2 ***Ecology of Catostomids in Twin Lakes, Colorado, in Relation to a Pumped-Storage Powerplant,*** Krieger, Douglas A. (Colorado Cooperative Fishery Research Unit, CSU, Ft. Collins)

80-5 ***Results of Fisheries Investigations at Twin Lakes, Colorado 1973-1976,*** Finnell, L.M., (Colorado Div. of Wildlife)

80-7 ***Studies of the Effects of Operating the Mt. Elbert Pumped-Storage Powerplant on Twin Lakes, Colorado: 1979 Report of Findings,*** LaBounty, James F., James J. Sartoris, Sharon G. Campbell, John R. Boehmke, and Richard A. Roline

81-4 ***Hydroacoustic Surveys of Fish Abundance and Distribution in Twin Lakes, Colorado,*** Thorne, Richard E., G.L. Thomas, (Fisheries Research Institute, College of Fisheries, U. of Washington)

82-3 ***The Relative Abundance of*** Mysis Relicta ***in Twin Lakes, Colorado, Using a Benthic Trawl,*** Nesler, T.P.

82-4 ***Twin Lakes Studies: A Characterization of the Twin Lakes Fishery via Creel Census with an Evaluation of Potential Effects of Pumped-Storage Power Generation,*** Nesler, T.P.

82-6 ***Limnology of Mt. Elbert Forebay, 1978-79,*** Boehmke, J.R., J.F. Labounty, J.J. Sartoris, and R.A. Roline.

82-7 ***Studies of the Effects of Operating the Mt. Elbert Pumped-Storage Powerplant on Twin Lakes, Colorado, 1980 Report of Findings,*** LaBounty, J.F. and J.J Sartoris

82-8 ***Colorado Cooperative Fishery Research Unit Studies of Twin Lakes, Colorado: 1980 Report of Findings,*** Bergersen, Eric P. and Melo Maiolie (Colorado Cooperative Fishery Research Unit, CSU, Ft. Collins)

82-21 ***Common Plankton of Twin Lakes, Colorado,*** Lieberman, Davine M.

83-2 ***Effects of Operating the Mt. Elbert Pumped-Storage Powerplant on Twin Lakes, Colorado: 1981 Report of Findings,*** LaBounty, James F. and James J. Sartoris

84-23 ***Effects of Operating Mt. Elbert Pumped-Storage Powerplant on Twin Lakes, Colorado: 1982 Report of Findings,*** LaBounty, James F., James J. Sartoris, and Davine M. Lieberman

OTHER FRYINGPAN-ARKANSAS PROJECT LIMNOLOGY REPORTS

75-5 ***Assessment of Heavy Metals Pollution in the Upper Arkansas River of Colorado,*** LaBounty, J.F., J.J. Sartoris, L.D. Klein, E.F. Monk, and M.A. Salman

81-15 ***Heavy Metals Pollution of the Upper Arkansas River and the Effects on the Distribution of the Aquatic Macrofauna,*** Roline, R.A. and J.R. Boehmke

82-5 ***Studies of the Limnology, Fish Populations, and Fishery of Turquoise Lake, Colorado – 1979-80,*** Nesler, T.P.

GPO 847-328

Mission of the Bureau of Reclamation

The Bureau of Reclamation of the U.S. Department of the Interior is responsible for the development and conservation of the Nation's water resources in the Western United States.

The Bureau's original purpose "to provide for the reclamation of arid and semiarid lands in the West" today covers a wide range of interrelated functions. These include providing municipal and industrial water supplies; hydroelectric power generation; irrigation water for agriculture; water quality improvement; flood control; river navigation; river regulation and control; fish and wildlife enhancement; outdoor recreation; and research on water-related design, construction, materials, atmospheric management, and wind and solar power.

Bureau programs most frequently are the result of close cooperation with the U.S. Congress, other Federal agencies, States, local governments, academic institutions, water-user organizations, and other concerned groups.

A free pamphlet is available from the Bureau entitled "Publications for Sale." It describes some of the technical publications currently available, their cost, and how to order them. The pamphlet can be obtained upon request from the Bureau of Reclamation, Attn D-922, P O Box 25007, Denver Federal Center, Denver CO 80225-0007.