AUTOMATIC GENERATION CONTROL—NOTES AND OBSERVATIONS

Engineering and Research Center
Bureau of Reclamation

October 1978

MS-230 (1-76)
Bureau of Reclamation

TECHNICAL REPORT STANDARD TITLE PAGE

1. REPORT NO. REC-ERC-78-6	2. GOVERNMENT ACCESSION NO.	3. RECIPIENT'S CATALOG NO.
4. TITLE AND SUBTITLE AUTOMATIC GENERATION CONTROL - NOTES AND OBSERVATIONS		5. REPORT DATE October 1978 6. PERFORMING ORGANIZATION CODE
7. AUTHOR(S) W. B. Gish		8. PERFORMING ORGANIZATION REPORT NO. REC-ERC-78-6
9. PERFORMING ORGANIZATION NAME AND ADDRESS Bureau of Reclamation Engineering and Research Center Denver, Colorado 80225		10. WORK UNIT NO. 11. CONTRACT OR GRANT NO. 13. TYPE OF REPORT AND PERIOD COVERED
12. SPONSORING AGENCY NAME AND ADDRESS Same		14. SPONSORING AGENCY CODE

15. SUPPLEMENTARY NOTES

16. ABSTRACT

The concept of automatic generation control is often considered complex because of the freedom each utility has in choosing individual characteristics within a basic control philosophy. This report endeavors to separate the basic philosophy from the individual characteristics to allow a clearer understanding of the control philosophy. Discussions of individual characteristics used by the Bureau of Reclamation are also presented.

17. KEY WORDS AND DOCUMENT ANALYSIS

a. *DESCRIPTORS*—/ *load-frequency control/ *interconnected systems/ *power system operations/ *power interchange/ algorithms/ automatic control/ control systems/ governors/ power dispatching/ baseloads/ generating capacity/ hydroelectric power/ electric generators/ computer applications

b. IDENTIFIERS—/ automatic generation control

c. *COSATI Field/Group* 09B *COWRR:* 0902

18. DISTRIBUTION STATEMENT *Available from the National Technical Information Service, Operations Division, Springfield, Virginia 22151.*	19. SECURITY CLASS (THIS REPORT) *UNCLASSIFIED*	21. NO. OF PAGES 25
	20. SECURITY CLASS (THIS PAGE) *UNCLASSIFIED*	22. PRICE

REC-ERC-78-6

AUTOMATIC GENERATION CONTROL—NOTES AND OBSERVATIONS

by

William B. Gish

October 1978

Electric Power Branch
Division of Research
Engineering and Research Center
Denver, Colorado

SI METRIC

UNITED STATES DEPARTMENT OF THE INTERIOR * BUREAU OF RECLAMATION

ACKNOWLEDGMENTS

The contributions of Mr. Brich of the Watertown Operations Office, Western Area Power Administration, and Messrs. Knutson and Realson of the Phoenix District Office, Western Area Power Administration, in reviewing the text and suggesting modifications are greatly appreciated.

CONTENTS

TABLE

FIGURES

ABBREVIATIONS AND SYMBOLS

ACE	area control error
AGC	automatic generation control
AR	area regulation
B	frequency bias in megawatts per 0.1 hertz
B_{Gi}	base point for generating plant "i"
F_A	actual power system frequency
F_S	scheduled frequency
i	the number of the generating plant
II	inadvertent interchange
k	the index for summing plants
K_D	derivative gain
K_F	total frequency bias
K_I	integral gain
K_p	proportional gain
K_s	system synchronizing coefficient
K_{SL}	speed-level motor gain
K_T	time error sensitivity
MVA	megavolt ampere rating of equipment
MWS	megawatt second inertia constant
N	the total number of generating plants in a control area
NAPSIC	North American Power Systems Interconnection Committee
P	participation factor for a plant
P_A	actual total interchange
P_c	contracted power schedule between utilities
P_{DY}	dynamic schedule
P_{Gi}	power generated by generating plant "i"
P_{LL}	lower limit power of a plant
P_m	measured intertie power
P_{nm}	intertie power not measured
P_s	total interchange schedule
P_{UL}	upper limit power for a plant
PID	proportional-integral-derivative
PR	plant requirement or station requirement
s	LaPlace variable
SHADE	measurement error correction
SLM	speed-level motor
T_A	actual or clock time measured measured from power system frequency
T_g	governor equivalent time constant
T_m	mechanical time constant (related to inertia)
T_s	standard time from WWV

INTRODUCTION

The electric power systems of the United States and Canada contain control systems to regulate and control energy flow of immense proportions. These control systems work together to maintain clocks to within 4 seconds of WWV standard time while simultaneously controlling the weekly generation and distribution of 40 to 50 terawatthours of energy (145×10^{15} to 180×10^{15} joules). This very significant engineering accomplishment is often overlooked.

The control system for this major task uses over 100 separate primary control units operating in parallel to command thousands of generator speed controllers (governors). Each of the primary control units has different characteristics and control philosophies, and only the most basic concepts are similar. These basic concepts for control are contained in the NAPSIC operating manual [9].[1]

The primary controller is the AGC (automatic generation control) system. The AGC system concepts have been described and discussed in a multitude of books and technical articles. A very basic text for help in understanding AGC system concepts is *Control of Generation and Power Flow on Interconnected Systems* by Mr. Cohn [12]. The comments and notes on AGC contained in this report were developed on the basic principles given by Mr. Cohn. This report is a series of discussions of techniques used in AGC that are relative to applications within the Bureau of Reclamation and the Western Area Power Administration.

SUMMARY

The AGC concept is not a complicated control philosophy. Complications arise as the requirements of energy marketing and resource management are factored into the control philosophy. The philosophy becomes more involved as the opinions of good performance criteria are included. Although the basic AGC concept is used throughout the power industry, each utility will interpret the energy marketing, resource management, and performance criteria differently, and an individualized control concept will be developed. This report is to help separate the basic control concepts from the individualized characteristics and promote understanding of the automatic generation control.

[1]Numbers in brackets identify selected references listed in the Bibliography.

BASIC AGC CONTROL CONCEPTS

The actual operation of the power system requires a form of speed control. The basic controller for speed is the governor which maintains control of the "prime mover" energy of a generator in response to generator speed. All governors on all the generators within a power system work in parallel because all generators are locked together in synchronism. Application of this concept alone could adequately control a power system provided all the tielines could withstand the resultant power flows. However, several improvements to system operations are implemented when a master control supervises the governor settings. These improvements include:

- Ability to determine the individual system loads and allow each system to carry its own load.
- Maintaining tieline flows to interconnected utilities to allow accounting of power sales between utilities.
- Maintaining system frequency at 60 Hz which permits the widespread use of electric clocks.

Note that the AGC is a supervisor of the normal governor. The AGC should never attempt to overpower the governor during system transients. Although a control to dampen intertie swings could be developed for AGC [29], the basic concept of AGC is to allow such swings to be controlled by governors, voltage regulators, power system stabilizers, and d-c interties.

Power systems operating personnel view AGC systems differently than control engineers. Operating personnel associate the AGC directly with interchange schedules, frequency, and time error. The control engineer views these as results of the AGC. The control engineering concepts presented in the next few paragraphs is an effort to provide as broad an understanding as possible. The remainder of the report does not require these concepts for a basic level of understanding.

The basic system response which the AGC attempts to control is "accelerating power." Accelerating power is the difference between all system generation power and the total system load including losses. If the power system is connected to a neighboring utility, the power on the tieline flowing out of the system is considered a load.

The frequency deviation is a measure of the integral of the total accelerating power on the entire power system. Because of the synchronizing effect of all interconnections, and because the AGC should ignore power changes due to synchronizing effects, the AGC frequency input is assumed the integral of accelerating power. The tieline flow error from the scheduled flow (or interchange power deviation) is proportional to accelerating power. In figure 1, T_m is the mechanical time-constant related to inertia and K_S is the synchronizing coefficient related to tieline strength [66]; system damping is not shown for simplicity. The remainder of the basic AGC system is shown in figure 2. The constant K_F is normally known as the AGC bias term, 10B. The constants K_{SL} and T_g are related to speed-level motor gain and governor response time, respectively. The LaPlace variable, *s*, is used in the denominators to indicate integration. This type of control system is similar to a PID (Proportional-Integral-Derivative) control system shown in figure 3, except the derivative gain, K_D, is zero. The input reference to the AGC is zero level accelerating power which always remains the reference. The interchange schedule and frequency schedule are used to facilitate the energy and time accounting and are not the actual reference to the control system.

Since the accelerating power is constantly disturbed by random load changes and power system disturbances, the AGC attempts to keep the first and second integral of accelerating power (frequency and time) at zero. The proportional and derivative of accelerating power are controlled by the synchronizing and damping forces of the synchronizing loop. The first integral of accelerating power is also controlled by the governor in parallel with AGC. However, the droop of the governor forces accelerating power to zero after a frequency shift occurs (proportional control of accelerating power). Again, the proportional-integral-derivative control from the synchronizing loop and the governors must never be overpowered by the first and second integral control from the AGC unless all governor and system characteristics are completely known.

AREA CONTROL ERROR FORMATION

The discussion of AGC control usually falls into two categories. The first category includes the formation of the ACE (area control error) and the second is the disposition of the ACE or the allocation process. The formation of the ACE is discussed in this section. The ACE is an error signal which, when positive, indicates excessive generation. A positive ACE always requires a

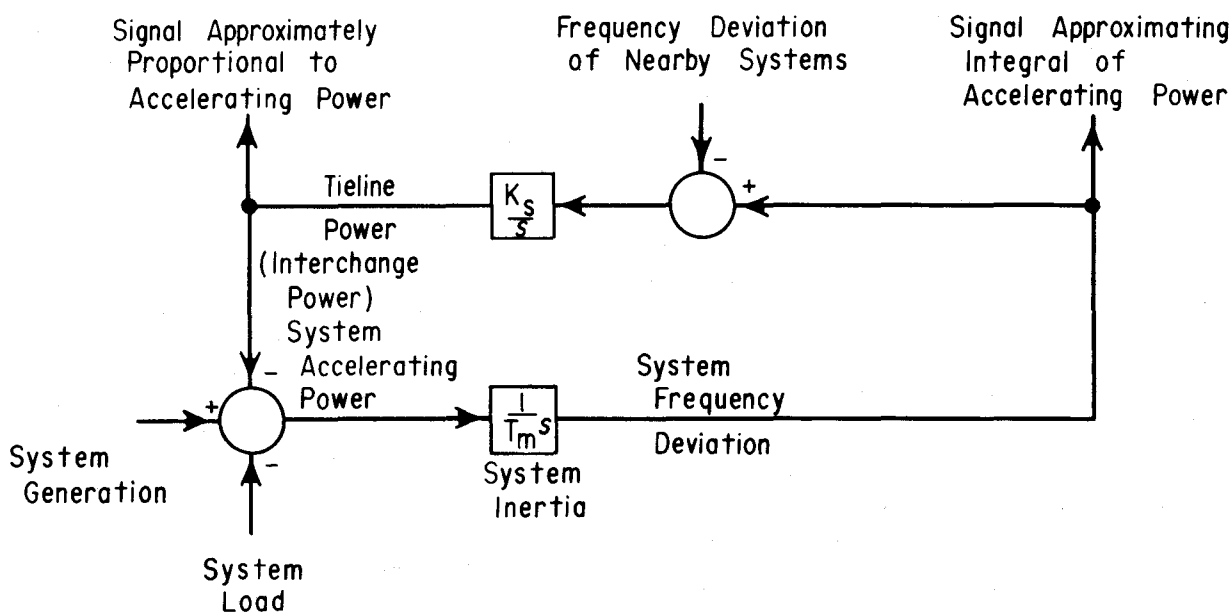

Figure 1. Simplified diagram of the system synchronizing loop.

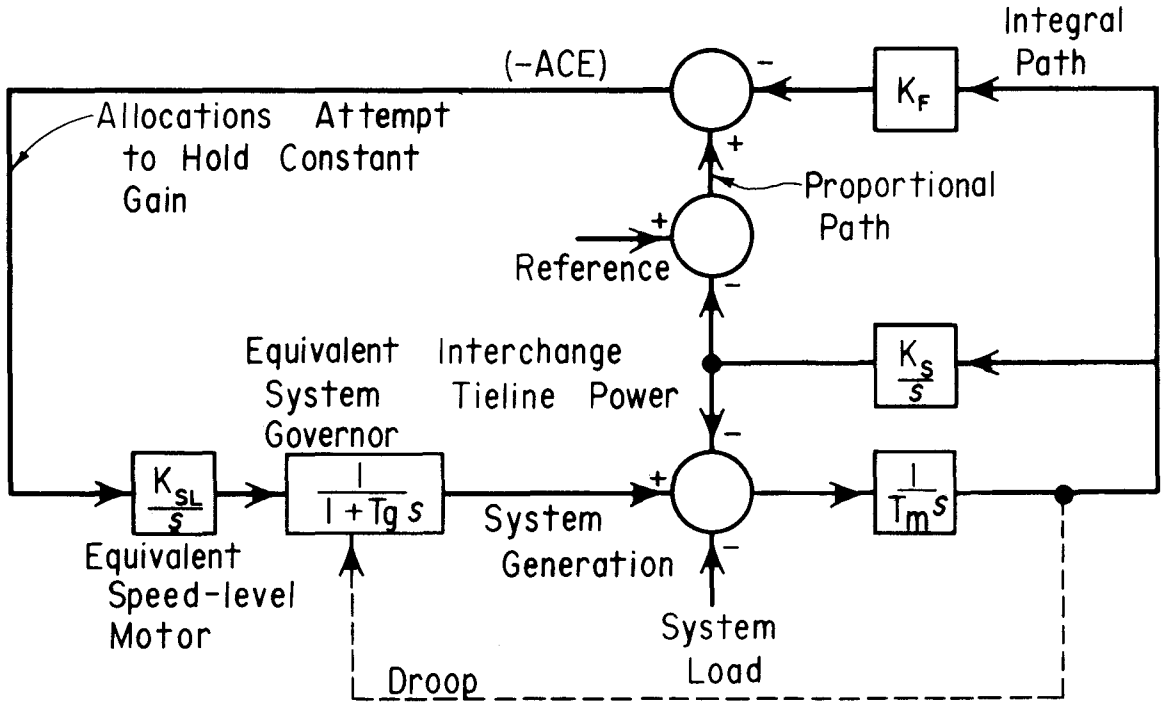

Figure 2.—Simplified AGC controller.

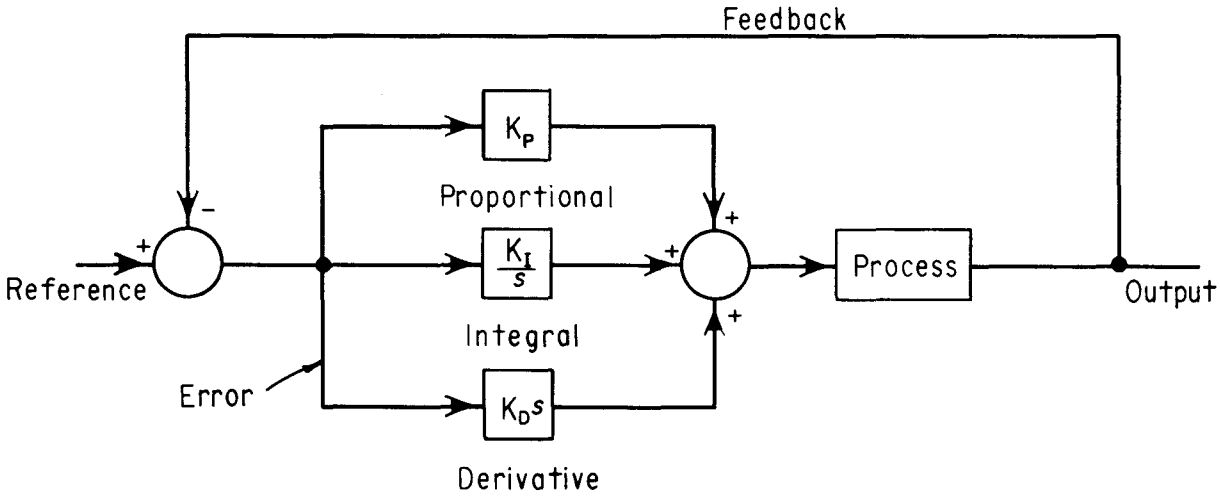

Figure 3.—Typical PID controller.

reduction in generation. The ACE signal is always opposite in polarity to the normal error signal used in most other types of control systems. Normally, the ACE has the units of megawatts.

The equation assumed by NAPSIC for all AGC controllers is

$$ACE = (P_A - P_S) - 10B\,(F_A - F_S)$$

where P_A is the actual total interchange power in megawatts with positive power flowing out of the system; P_S is the total interchange schedule for the system; F_A is the actual frequency of the system in hertz; F_S is the scheduled frequency; and 10B is the system frequency bias in megawatts per hertz (B is always negative). The subtraction of reference from the actual quantities is the reverse from normal control system procedures.

Interchange Power

Although the interchange power deviation is a measure of accelerating power, the primary purpose of the interchange power is for accounting. The AGC is primarily used to maintain interchange schedules and it accomplishes this task by holding the accelerating power to zero, using the generation, rather than the tieline, to adjust accelerating power. Because power generated in the system will use the path of least impedance to seek a load, there is no way to constantly determine the exact power flow path between several interconnected utilities. An energy meter on a specific intertie cannot easily determine the energy flow for the several utilities which may have power contributions on the intertie. Thus, the schedules and related rates for the buying and selling of power between utilities is recorded as contracted schedules and the total schedule of all interchanges is developed. If the actual total interchange deviates from this total schedule, it is not usually possible to properly adjust any individual schedule or to determine the correct charges. The total interchange deviation from scheduled becomes "inadvertent interchange," and special arrangements must be made to pay for the energy. Normally, agreements exist between utilities to allow payback of inadvertent interchange at agreeable times and thus reduce the inadvertent interchange to zero.

Measurement errors and SHADE.—The accurate measurement of power (and frequency) and the accurate setting of schedules is important; however, errors in measurement and setting do exist [11]. Each utility creates their own special way of compensating for these errors. One way is to adjust the schedule to account for the errors. This adjustment is called "SHADE."

SHADE is defined as the integral of the errors and is added to the schedule. Thus:

SHADE = OLD SHADE - ADJUSTED ACE

This is calculated every hour or every day as the system requires. The ADJUSTED ACE is the error calculation and is divided into several components;

ADJUSTED ACE = inadvertent interchange,
adjusted time,
adjusted frequency,
adjusted ramps, and
scheduled inadvertent interchange.

If the components are broken up, SHADE calculated for 1 hour can be shown to equal the quantities: (SHADE from last hour) - (Metered energy sum from all boundary ties over last hour) + (The scheduled power over the last hour times 1 hour) + {(Bias setting for frequency bias in megawatts per 0.1 hertz (Base reference frequency setting for last hour minus 60.00)} + {(Scheduled power at the start of the hour minus scheduled power at the end of the last hour minus scheduled power at the start of the last hour plus scheduled power at the end of the hour before last)/48} + (Total scheduled inadvertent interchange desired by the dispatcher).

The dynamic schedule.—The dynamic schedule concept helps the smaller utilities which own or share in ownership of large generators. The smaller utility is not required to regulate the large generator alone but can share regulation over several areas more compatible with the generator size.

Before dynamic scheduling, it was customary to develop a schedule for 1 hour of operation and leave the schedule constant. Many occasions required schedule changes in the middle of the hour or at other times. A dynamic schedule system was developed for use with certain large generators having multiple ownership to allow continual changes in schedules.

The generator must never be considered joint operated, but rather joint owned. The operating utility where the generator is physically located

must be in control of the unit. Many various techniques are used to generate and account for the dynamic schedule. One method suggests that:

- Each owner calculates (or allocates) the desired power requirement or schedule for the owner's share of the generation. This does not necessarily have to be constant, but may be allocated dynamically. This allocation can be identical to the normal allocation of any generation within the owners' system.

- All the owners' power requirements are transmitted to the operating owner's system where they are summed.

- The operating owner controls the generator power output with a closed loop power controller.

- The generator power output is continually divided into the percentages for each owner. This percentage is determined by the percentage of the owner's power requirement to the total power requirement.

- The owners' share of power output is dynamically (continually) added to the owners' system boundary.

- The energy reading for each owner, except the operating owner, is the owner's share of generator power output integrated over each hour. The operating owner subtracts the total energy for all other owners from the actual energy reading and uses the result as his energy usage.

The operating owner must treat all other owners' power output as power out of the system rather than input. See figure 4.

Another use for dynamic schedule involves the accommodation of another utility's loads (or generation) completely enclosed by the control area. In this situation, there is no way of predicting the actual load ahead of time. Thus, there can be no scheduling of the load. If the load power requirement is used as a dynamic schedule for the control area surrounding the load, that control area can eliminate power flow to the isolated loads from their interchange readings. Likewise, the neighboring utility which owns the load uses the same dynamic schedule to adjust his interchange readings. The load then seems to be in the control area of the utility owning the load. The schedules used for contracting for the transfer of energy throughout the control area surrounding the load is calculated after the fact by averaging the actual load energy used over the hour.

Metering the interties and accuracy.—The metering of the interties between a system and neighboring systems may be divided into two areas, the accuracy of the signal and the detection of errors.

The accuracy of the signal is again of more concern to the accounting procedures than to the control system. The accuracy of transducers range from 1 to 0.1 percent error at full scale. The metering potential and current transformers have an accuracy between 0.1 and 0.3 percent error at rated voltage or current. With scaling resistors, temperature coefficients, and telemetry electronics, and accuracy of 0.5 percent of the reading is normally obtained at the location of the AGC equipment. If the energy (MW·h) monitoring equipment is assumed errorless (as is normal for accounting), the transducer accuracy may be somewhat improved by a method similar to SHADE. The energy is read every hour and the power output read from the transducer is continuously integrated over the hour. By comparing the actual and calculated energy used, an error correction may be applied to the next hour of power data. Thus:

$$\text{Calculated power (MW)} = \text{Actual power reading (MW)} \times \frac{\text{Energy (MW·h) last hour}}{\text{Calculated energy (MW·h) last hour}}$$

This concept works well if the power readings do not change often and are not below 10 percent of the transducer full scale. An alternative method uses the same actual energy value divided by the calculated energy, and then a table of values is formed for each range of average power readings over the hour. This table is stored and used to multiply the actual power reading for each reading. In other words, a semidynamic calibration curve is used. This concept is rather complicated to implement and update, and does not work well unless the transducer is frequently operated over its range.

Analog telemetry channels usually involve some delay or filtering of the power reading. In digital

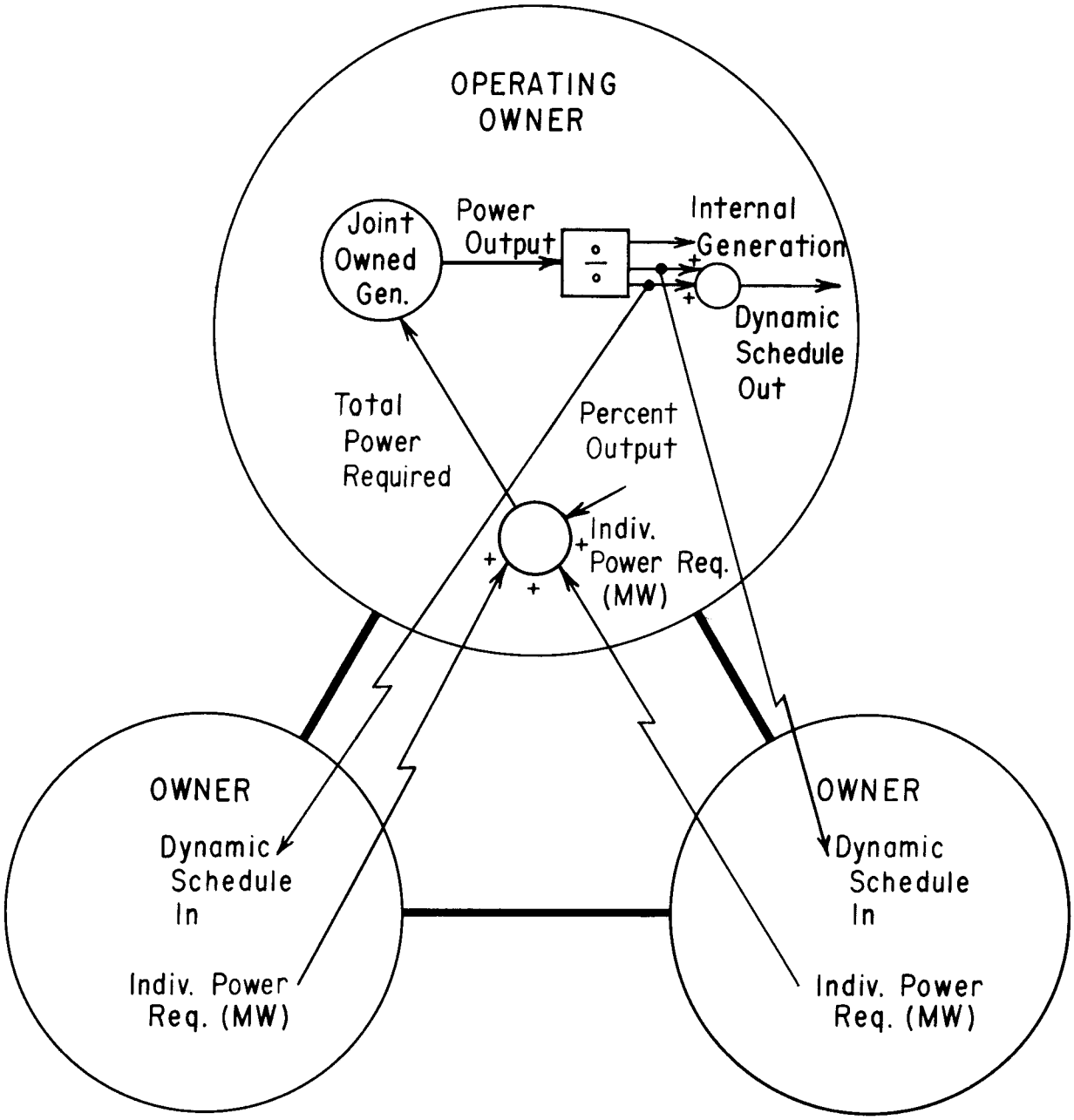

Figure 4.—Dynamic schedule of a joint-owned generator.

systems, the sampling rate forms a delay and often several computers must transmit the data to the AGC computer, with a delay in the data at each computer. In the Bureau of Reclamation and Western Area Power Administration systems, the sampling rate is normally 2 seconds with transport delays often as long as 6 seconds. Thus, the coherency of the various power readings becomes an important question. If the primary concept of AGC is not to control intertie swings, then AGC response to signals faster than 0.016 Hz (1 cycle per minute) is really not necessary. It should be realized that with a frequency response of 1 cycle per minute, the transient response of the AGC is not delayed by 1 minute but rather responds slowly at first to an error. There are no intentional delays of the ACE signal. In addition, the governors which the AGC controls usually cannot function effectively above this frequency. Thus, filters with time constants above 0.16 Hz (10 times the 0.016-Hz frequency) will cause very little phase shift or gain reduction. Sampling theory indicates that the samples should be at least 10 times faster than the highest frequency of the controller (0.16 Hz). Thus, a sampling frequency faster than 0.16 Hz (or a sampling period of 6.25 seconds) should be used. It is always best to sample as often as possible. Randomness in the sampling time of 6 seconds can be tolerated (the maximum sampling period) without seriously affecting the control. Thus, a sampling period of 2 seconds with a maximum of 4 seconds of random transport delay would not seriously affect the AGC control. If frequencies above 1 cycle per minute are required to be controlled, the sampling periods and filter frequencies must also be raised. The governors seldom respond faster than on a 10-second time constant which has a filter frequency of 0.16 second. Many hydroelectric generator governors have a 30- to 40-second time constant or more with response frequencies of 0.5 to 0.4 Hz. Normally, good control of the governors can be achieved at one-fifth the time-constant frequency or 0.3 to 0.08 Hz (the gain and phase are seriously dropping by this time). This becomes the fastest an AGC can be expected to control. Fortunately, these fast response times are not usually required and tuning of the AGC is not as difficult. Actual AGC systems usually have equivalent time constants of less than 0.0003 Hz or 0.018 cycle per minute. At 1 cycle per minute, the gain may be down more than 40 decibels.

Since aliasing (or sampling frequencies higher than one-half the sample frequency) is normally expected from intertie oscillations between systems, an analog filter before the analog to digital converter is absolutely necessary. The time constant of the filter should be no higher than one-forth the sampling frequency or 0.7 second for a 2-second sampling period. Good results with aliasing reduction utilizes 3-second filters with a 2-second sample period. The gain is then down for the high frequencies without undue phase shift at a 1 cycle per minute control frequency.

Errors in metering the interties.—A very serious problem to the total summation of the intertie power is the loss of an intertie reading. If the transducer or telemetering equipment fails, large changes in ACE will occur falsely causing unnecessary control, inadvertent interchange, and time error. Since most of the failures occur in the transmission link, the easiest failure to detect is loss of carrier frequencies. Normally, contacts are provided on telemetering or microwave equipment which close on loss of carrier signals. The AGC equipment can monitor these contacts and should one close, the AGC is tripped or "suspended" until the trouble can be remedied. With digital computers, the last good reading can be saved and a timer started, but the AGC continues to operate. If the timer, usually 20 to 30 seconds, times out without the carrier signal returning, then the AGC is suspended. If the carrier returns a second timer, 10 to 20 seconds may be used to insure the signal is steady before the reading is again updated. Should the second timer, or the "thawing" timer, not completely cycle, the first timer is not reset but continues. Thus, bouncing contacts will cause a time-out. Once the AGC is suspended, the operator must remove the tie from monitoring status on AGC and adjust the schedule, usually with a manual substitution interchange value, before allowing the AGC to become active again.

Failure of a transducer may be detected by monitoring the rate of change of the metered power, and if it is large and the final power reading is near zero, an alarm may be sounded. Unfortunately, the same effect may be produced by transmission line tripping or intertie oscillations and care must be taken not to "save the old value" unless the transducer is the device known to have failed.

A help in increasing the security of the intertie readings is to have alternate transmission paths. These alternate paths are then used when the primary path has a carrier signal failure. However, the secondary source must have the

same error detection as the primary and should be constantly checked to ensure the channel is working when the secondary channel is needed.

Another source of error of the intertie power readings is channel noise. These usually are most serious in the form of noise spikes caused by electromagnetic interference. One method of reducing the effect of noise spikes is to digitally filter the input reading. Single time constant filters (recursive filters) with approximately 4-second time constants work well in 2-second sampling systems. Averaging filters which sum the last one or two readings with the present reading and divide by the number of readings will also help with noise spikes. The averaging process should not have more than three stages in order to preserve the phase shift of the signal at a frequency one-tenth the sampling frequency. The AGC control will automatically filter these noise spikes because of the integrator (speed-level motor) in the control path. The noise spikes do increase the activity of the ACE.

If PMSC (programmable master supervisory control) systems are used to obtain the intertie readings, it is not always possible to determine the loss of a reading because the reading may have been skipped when the equipment may have been busy transmitting status events. A method of flags and timers is sometimes used to ensure that a reading is indeed transmitted. Another method uses a separate square wave voltage signal applied to an A/D input at the same remote terminal unit metering the intertie. The square wave has a period of 4 to 6 seconds. If this change is not detected by the AGC computer, the signal is assumed to have failed. The best method depends on the communication procedures of the particular PMSC.

The summation of power or the intertie power deviation.—When all intertie readings have been taken, and the schedule entered, including manual entry of unmonitored interties, the schedule is subtracted from the total intertie readings and the "intertie power deviation" is formed. This quantity is used in the formation of ACE and the determination of inadvertent interchange.

If the total intertie reading is subtracted from the total generation of the system, the result is an approximate value of the system load. If the frequency is varying, some of the power calculated as load is actually accelerating power. The tieline losses are also included in the value of load.

Inadvertent interchange.—Inadvertent interchange is a concept developed for accounting and is not directly used by the AGC control. Inadvertent interchange (II) is defined as

$$II = \int P_S dt - \Sigma\, MW{\cdot}h \Big|_{\text{over 1 hour}}$$

and is calculated when the energy (MW·h) readings are available, normally once an hour. The P_S is usually calculated from the start of the last hour to the start of the present hour. This calculation does not include the ramping of the schedule from normally 5 minutes before the hour to 5 minutes after the hour which is reflected in the energy readings. Thus, a ramp correction must be made to the integral of the schedule.

Integration of intertie power deviation from power measurements also generates inadvertent interchange as a continuous value. Although this value is not based on the energy readings (which are assumed perfect by the accountants), the value can be used to aid the dispatcher in determining the ability for the AGC systems to maintain the interchange schedule. It should be remembered that inadvertent interchange is an energy error between systems and may be caused by many circumstances outside a particular AGC system. Therefore, inadvertent interchange cannot be used alone to determine the quality of AGC control of a particular system. This calculated interchange may be used in a coordinated inadvertent interchange payback method proposed by Mr. Cohn [11]. It also can be used as a component of the integral of ACE discussed in succeeding material.

Reducing the inadvertent interchange.—Care must be taken when reducing the inadvertent interchange since reduction of inadvertent interchange for one system may increase the inadvertent interchange in a neighboring system. The payback of inadvertent interchange should be negotiated between two systems so that the payback will help both systems. This is called "bilateral payback." If this coordinated payback is not possible, then a "unilateral payback" may be made but only if time error is decreased. Another concept would be to institute a "synchronized" or coordinated payback system using time error as well as II where all members of a large power pool would payback II according to a signal from a "master utility." [11] This does require that all utilities use the same metering methods and the same methods for calculating II.

Frequency and Time Signals

The ACE is formed by two types of signals - the interchange deviation power and the frequency bias. If only interchange power is used, the control is considered "flat tieline" control. The utility must then depend on other utilities for frequency and time correction and the utility will unnecessarily participate in disturbances within neighboring utilities. Thus, this control is used only when frequency is temporarily not available. If only frequency bias is used, the control is known as "flat frequency control." This control forces a utility to provide power for all disturbances on the entire system and does not allow for reasonable accounting procedures. Flat frequency control is seldom used. "Tieline bias control" exists when both frequency bias and tieline deviation is used and is the normal, recommended method of control. Each utility then shares equitably in a system disturbance. Western utilities also add time deviation signals to automatically correct time. Eastern utilities correct time using the frequency reference offset method. Western utilities will also correct large time errors with the frequency reference offset method.

Frequency signal accuracy.—The frequency signal should have accuracy to 0.001 Hz or better and have near perfect long term stability. Fortunately the frequency signal need not be fast since the AGC need not attempt to correct intertie oscillations. Therefore, a filtering system or a method of measurement can have as much delay as a simple filter with a 3-second time constant. The phase lag should be maintained as low as possible in the 1 cycle per minute range. Also, since the AGC is to ignore intertie swings, frequency is assumed the same over the entire system and the frequency is monitored at the nearest power system bus to the AGC equipment. Failure of the signal can usually be detected by the signal going out of limits. These limits are usually set at 59.8 and 60.2 Hz. If the system frequency is outside these limits for any reason, it is customary to suspend AGC operation. The power system is in serious trouble if frequencies of these magnitudes are experienced, and the AGC can do little to help. If the frequency is telemetered, the loss of carrier must suspend control. A similar timing system to the interchange power monitoring system may be used and alternative sources of frequency should be provided.

Frequency bias.—The setting of the frequency bias is a very controversial concept. Figure 1 shows that the frequency signal is essentially the integral of the accelerating power. Because the accelerating power is the variable to be controlled, the integral of accelerating power can be used as a valuable signal for the controller. However, the frequency is the integral of accelerating power times T_m^{-1} where T_m is the mechanical time constant of the system within the AGC control boundaries including the inertia of the loads. To obtain the pure integral of accelerating power when frequency is summed into the ACE signal, the frequency bias, 10B, should be equal to T_m, where

$$T_m \simeq 2 \sum_{\substack{\text{all} \\ \text{equipment}}} \frac{MWS_{rated}}{MVA_{rated}}$$

where the MWS is the inertia constant for the equipment in megawatt seconds and MVA is the megavolt-ampere rating of each piece of equipment. Because this quantity is continually changing as different generators and different loads are connected to the system, the bias should be continually changing. If the AGC control were required to perform excellent control for tieline oscillations, then the bias should theoretically be less than this value (usually indicated as β in many references). However, the AGC is not normally used for tieline oscillations and a bias equal to or greater than the T_m or B is usually recommended. The method of determining the bias, 10B, is described in the NAPSIC manual [9].

In practice, the power system is far too complicated to adequately measure T_m of a specific control area, and the bias is based on the control area peak generation during the year. The value of B may be 1 to 2 percent of the peak generation.

Frequency Schedules and Use in Time Correction.—Since the inability to maintain the intertie schedule results in movement of accelerating power, a frequency error is introduced. The frequency error then results in a time error that can be seen on electric clocks connected to the system. Therefore, the time is normally monitored by one utility in the system and compared to an accurate time standard such as WWV or WWVB radio stations. When time corrections are needed (when the error is 3 to 6 seconds) an

order is sent from the "time" utility to all other utilities requesting a time correction. All the utilities change their frequency schedule (usually by 0.02 Hz) for a period of several hours. This is the same as changing the schedule interchange if the bias, 10B, is included; however, it is more convenient to change the frequency reference the same for all AGC controls working within the overall system.

The time error may not be corrected during peak system loads in some situations because the added energy for time correction utilizes higher cost fuel. The time may be "overcorrected" or advanced using lower cost fuel in the early mornings in anticipation of the heavy system loads.

Time Deviation Signals.—It is now possible for all utilities within the overall system to monitor accurate time from WWV at a reasonable cost. If all the utilities monitor time and bias ACE for time correction, then time can be continuously corrected without resulting inadvertent interchange (from time correction). This is the very same concept as changing the frequency schedule except the schedule is changed continuously and automatically. To be successful, all utilities must use the same amount of offset for the same amount of time deviation. This quantity is usually called "sensitivity" of the time deviation correction system. In the Western systems, a sensitivity of 0.02 hertz per second has been used. In reference 11, a system is presented that uses a signal from the "timekeeping" utility to all utilities to synchronize both time and inadvertent interchange. Unfortunately, all utilities must participate to allow accurate corrections.

Usually the time deviation signal is limited to a preset value so the ACE is not greatly biased for large time errors. For minimum inadvertent interchange, all utilities must use the same limit value as they must use the same sensitivity. The time deviation error must not have much gain (or time must not be corrected quickly) since the time deviation is the second integral of accelerating power control.

The Final Form of ACE.—The final formation of ACE is shown in figure 5. The basic equation is:

$$ACE = (P_A - P_s) - 10B \left\{(F_A - F_S) + K_T(T_A - T_s)\right\}$$

$$\text{and } P_A = (\Sigma P_m) + P_{nm}$$

where P_m is the measured tieline power flows in megawatts and is positive for power flow out of the control area. The P_{nm} is an entry from the dispatcher to account for interties not measured because of equipment failure or other technical or economic considerations. The scheduled power $P_s = (\Sigma P_c) + P_{DY}$ + SHADE where P_c is the contracted power sold or bought between utilities, P_{DY} is the dynamic schedule from joint-operated generators or loads, and SHADE is the measurement error correction factor. The values of P_c, P_{DY}, and SHADE are in megawatts and are positive for power or energy leaving the system (or energy sold). The frequency bias, B, is the bias value which converts a frequency deviation into an equivalent power change; it is in megawatts per 0.1 hertz and it is always a negative number. The measured or actual system frequency, F_A, is measured on the power system near the AGC equipment and is in hertz. The schedule frequency is the frequency desired by the dispatcher; it may be different than 60 hertz for time error correction. The constant K_T is the time sensitivity factor and is related to the total time desired for correction. The units are hertz per second. All utilities with automatic time deviation correction must use the same K_T. Sometimes the time sensitivity is reported as $10BK_T$ and is given in megawatts per second. The time, T_A, is measured by integrating system frequency and has the units of seconds. The time, T_s, is the standard time from WWV.

AREA CONTROL ERROR DISPOSITION

Once the ACE has been formed, the signal must be routed to generator governors so that the generation of the system can be changed. The principal function of this part of the AGC control is to establish control loop gain. Before the ACE is formed, the control gain could not be easily implemented since all signals contributing to ACE would have to be multiplied by the same factor. After ACE is formed, a multiplying factor can be applied to a single signal. After the ACE is formed, the gain should be as high as possible without instability. There are two major concerns. First, the gain of the speed-level motors differ from unit to unit and more than one SLM (speed-level motor) may respond. There is always the problem of deadband and hysteresis in the SLMS and governors. Second, the control must activate the SLM, governor, and prime mover controls such as throttles or wicket gates. These devices are mechanical in nature and wear out with constant use. Unnecessary movement of

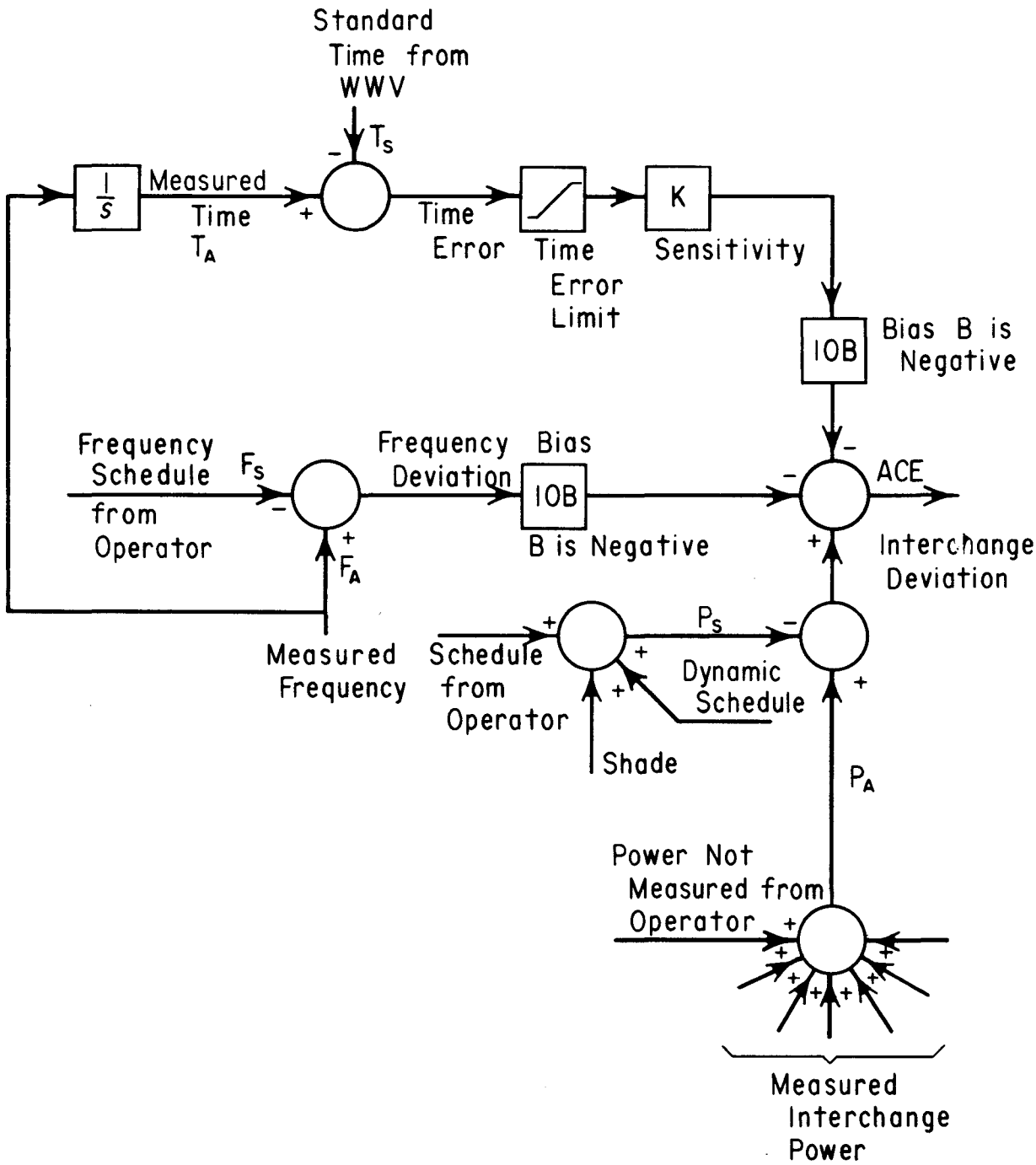

Figure 5.—Components of ACE.

these devices creates additional maintenance costs. Thus, a strong incentive is present to reduce the number of movements or control operations if such a reduction does not greatly increase the inadvertent interchange. This reduction of control activity is implemented by modifying the ACE and by the design of the allocator.

Modifying the ACE

Modification of ACE is usually an attempt to reduce the random noise inherent in the ACE signal. The power system load is constantly changing in a somewhat random manner and the power system often restores itself by random disturbances which cancel the previous change. Thus, the accelerating power is constantly in motion and, for a large percentage of the time, is constantly fluctuating about zero. The AGC control cannot remove this "noise" from the power system with the slow speed-level motors and governors. Further, to control such self-correcting variations causes unnecessary wear and tear on the mechanical parts. Therefore, two criteria are usually used to decide when ACE is valid. First, slow drifts within the ACE must be corrected to minimize the inadvertent interchange and the time error. These slow drifts, due to slow load changes, are of the range of 5- or 10-minute duration or more. Second, large rapid changes of ACE indicate the loss of generation or load. A reasonably rapid response of the AGC will allow a control area to rebalance generation to load without unnecessary or lengthy assistance from neighboring utilities. It should be noted that many AGC systems do not modify ACE and do work satisfactorily. However, the use of some ACE modifications has significantly reduced activity of certain AGC systems.

Limiting and Deadband.—The most simple modification to ACE is to provide a deadband sized to remove some of the random "noise." The deadband works well to reduce activity and to allow rapid recovery of system disturbances. However, the deadband may mask a small, slow change or offset in the ACE. Another modification to ACE is to provide a limit. The limit is especially useful in systems where a larger ACE could not influence more generation anyway and, thus, the dynamic range of the ACE is not excessive for the hardware. Often, ACE levels cause a switch of gain on the ACE signal by changing the type of allocator used. Such a switch may be called "emergency assist" mode. It is generally acknowledged that deadbands and limits can be applied elsewhere in the control system with perhaps better results and that little is accomplished by modifying ACE itself.

Smoothing Functions.—Smoothing filters can be applied to modify ACE. These filters are normally simple, single-pole time constant filters which work to reduce the gain of the "noise" and allow the slow changes to have full gain. A time constant of 120 seconds has been used to reduce system "noise." [33] This filter does reduce "noise" and allow correction of slow changes, but the rapid, large system disturbances are not responded to.

A possible remedy for the rapid, large system disturbances is to switch to an "emergency assist" allocator using unmodified ACE when the unmodified ACE reaches a present level. The filtered ACE is then used when the ACE returns to the normal operating levels.

The Probability Filter.—Many AGC systems have adopted some form of a probability filter. The basic filter design was presented by Dr. Ross [33] using the designation "Error Adaptive Control Computer." The adoption of the filter to Bonneville Power Administration is reported by Taylor and Cresap [42].

The description of the filter is not overly complicated, but the description of the adjustment of the filter parameters is very difficult. The adjustment depends on the operating characteristics of the power system which are difficult to measure and interpret. The following paragraphs attempt to describe the needs for the filter, the basic design of the filter, and a basic concept of filter adjustment.

The "Error Adaptive Control Computer" described by Ross is based on the need for discrimination of three different types of signals found in power system control. These are "deterministic," "probabilistic," and "sustained" error signals.

- Deterministic error signals have characteristics which are known although their occurrence may be random. These deterministic errors may be caused by intertie swings, periodic load fluctuation (i.e., rolling mills or arc furnaces) or large, sudden changes in load or generation.

- Probabilistic error signals are random in nature but may have some definable amplitude level and

frequency band. These errors may be caused by the normal, random changing of load on the power system.

- Sustained error signals are usually caused by the control system errors from either man or equipment. These errors develop into inadvertent interchange and/or time deviation.

The filter attempts to discriminate the signals of each type into errors which need correction (or more accurately, which will respond to correction and benefit the system in an economical sense) and errors which can be safely ignored. The result of the discrimination process is an "amplitude modulation" of the ACE. The amplitude modulation is usually in discrete steps, such as multiplying the ACE by zero, one, or two. The ACE is never "phase shifted," because an amplitude modulation is used, however, the error is used to control governors and power system inertia, and the time constants of these devices use the overall effect of the modulated wave and effective phase shifting does occur. The process is very similar to the firing of SCR's (silicon controlled rectifiers) into an inductive load. The individual pulses of voltage are smoothed into a current and the overall effect is very nearly the same as if the voltage were amplitude controlled and phase shifted (instead of being switched).

As described, the output of the filter is switched between two or three gains. This switching process is basically caused by the ACE crossing zero, and the weighted ACE (a constant times ACE) plus the integral of the ACE exceeding a preset value for a preset time. Usually several filter elements are used in a specific filter application.

The error signal crossing zero.—When the ACE crosses zero, an assumption is made that the power system is restoring itself and no control action is required. Each time the ACE crosses zero, the gain applied to the ACE is set to zero (this is the concept described by Taylor [42]). The gain remains at zero until a timer times out or ACE again crosses zero. This provides a very effective "filter" of all frequencies having periods of less than twice the timer setting. Taylor sets the timer to 3 seconds and all frequencies above approximately 0.16 Hz receives no control. It also should be noted that this type of zero crossing filter will allow slow or sustained ACE of about one-half the random noise signal amplitude to continue without control action.

Ross implies the opposite concept. When the zero crossing occurs, a separate timer is reset to zero, and if no other filter elements are active, the gain is set to zero. This does not necessarily filter the high frequencies because other filters may be active but does provide strong control of "sustained" ACE. Ross also suggests two different timers to provide even higher gain for "sustained" ACE that do not seem to respond to control.

The weighted error signal and the integral of the error signal exceeding a preset limit for a preset length of time.—This filter element works on the concept that if the ACE and the integral of ACE are not sustained for a given length of time, control is "probably" not required. The difficulty lies in the word "probably." To one observer, the control is too active, and to another, the same control is very quiet. The measurement of "probably" is usually control activity. There is further discussion of the "activity" in succeeding material.

Both Ross and Taylor describe a probability filter with two of these filter elements. However, the method of determining the integral used by these elements differs. Ross indicates that the integrator should be periodically reset to the inadvertent interchange and time deviation as calculated from sources other than ACE (such as watthour totalizers, etc.). This implies that the integral stage can have a substantial, sustained, but limited value. Taylor uses an integral with very low limits and thus provides a hysteresis effect on the weighted ACE.

The weighted ACE signal is essentially an artificial error energy signal in the same manner that the integral of ACE is the actual error energy signal. (Another way to look at the signals is to realize that a power error, ACE, applied to the system inertia procedures frequency error.) The artificial error energy indicates what energy is in the ACE signal if it had continued at the present level for a preset (or weighted) time. This can be considered a method of predicting for a short period of time what the error energy will be. The sum of the actual error energy and the "predicted" or artificial error energy give a total error energy or a total expected energy that indicates how serious the error is. If the error energy exceeds a preset level, the error is serious and may require control. A timer is included to ensure that the serious error energy remains serious long enough to "probably" require control (or that the expected time error is enough to "probably" require control).

If the error energy builds to a high level in a short time, the error is considered serious. But, if the error energy builds to a medium level for a longer period of time, the error is more serious and the gain is then doubled. This long duration may indicate that the error is not responding to control action. The result of the filter element is that a certain area of frequencies include the higher frequencies. Also, a deadband effect occurs because the filter will not respond to low level signals.

It is important as noted by Ross that the integral output does not ever exceed the preset level for switching gain of the sum of the integral plus the weighted ACE. Otherwise, the ACE would become active (have a gain other than zero) when excessive inadvertent interchange is present and the control would become extremely active (but miscontrol would not result). For this reason, a hard limit on integral of ACE is required.

There are numerous ways to adjust the probability filter elements. The adjustment is primarily based on activity and speed of system recovery; neither of these concepts are well defined. Systems have operated (and are still operating) without the filter; however, on these systems, there have been some complaints about the control being too active or not fast enough. It is known that if activity is reduced, the speed of recovery or response can be increased. Because increased response usually implies lower levels of inadvertent interchange, speed of recovery may become important. The response speed also depends on other factors such as the number and size of the generators responding and the response of the powerplant controllers, and because the inadvertent interchange depends on many different parameters, the only quickly observable characteristics of an AGC system is activity. Therefore, a "feel" for systems activity is usually developed by anyone who has responsibility for an AGC system. Activity can usually be mentally equated to "wear and tear" of equipment. The speed-level motor may wear out faster when the AGC is active, but it is debatable whether the governor suffers from added "wear and tear" since there is always a little governor activity due to the power system frequency. Because inadvertent interchange is more "important" than speed-level motors, the normal association should be "less activity to allow for more response to reduce inadvertent interchange." Unfortunately, as the activity decreases, the ability to respond to certain types of errors decreases and the dispatcher becomes aware of circumstances when the control is too quiet. Reasonable settings for the filter elements must be determined despite the conflicting condition.

One method for adjusting the filter is to precalculate the settings based on some simple data measurements and then tune the system while in service. Ross discusses this approach. The "optimum" tuning can be done by a very knowledgeable installer who fully understands the filter. Unfortunately, few people fully understand the filter and often less knowledgeable people will later alter the tuning to suit their "feel" of the system.

A second method of adjustment is by simulation as described by Taylor. This method usually allows a parameter study to be made so that the change in operation from the change of any parameter can be understood. Usually, most of the parameters are then defined as "best," and one or two parameters are left for the tuning process during normal operation. System simulation is not an easy task and very often parameters found from simulation neglect some characteristics of the system which the filter must either accept or reject.

Biasing the ACE with the Integral of ACE.—Some AGC systems use the integral of ACE to bias the ACE; this helps correct slow drifts in ACE. The principal effect is the reduction of opposite polarity pulses to the generators resulting in reduced activity. As an example, during an extended loading period (such as the morning loading), the integral of ACE will restrict "lower" generator pulses and favor "raise" pulses. The activity is reduced because a lower pulse would require a raise pulse in a short time. Improved results with the integral of ACE can be obtained by also using a filtered ACE (as previously described). The reduction in activity will be between the filtered ACE alone and a well tuned probability filter.

The Allocator

The allocator is the most controversial and complex part of the AGC system. The control system requires that the ACE is delivered to a generator to alter the generation and thus the accelerating power. The principal question is which generator must be controlled. The first area of concern is the range between "permissive"

and "mandatory" control concepts. These concepts are based on the requirement for baseload setpoints.

Baseload Setpoints.—The generators used in a power system have many constraints. Some generators may be required to run at a fixed load for mechanical reasons. Other generators have auxiliary equipment which runs best between two specific (and usually close together) load levels. Other generators may have reservoir level or river flow constraints. Thus, when the dispatcher selects generators to supply the load, many generators must be maintained at a basepoint generation level.

If the basepoints are allowed to change, often the movement of the generator to the new basepoint must be done as quickly as practical to avoid turbine rough zones or switching of auxiliary systems. Thus, some generators must be ramped to the new basepoint without regard to the immediate need of the power on the system.

The same concepts of baseloading and ramping also occur for entire powerplants. Hydroelectric installations may be required to pass large volumes of water or must be run to maintain a certain river flow, and the requirements of the immediate system are less important.

Permissive or Mandatory Control.—A permissive allocator can be defined as an allocator which never causes a control output that either perturbs or conflicts with ACE (i.e., the immediate system energy balance is most important). This is the best controller from the control theory standpoint. The ACE is always in control and no unnecessary control actions occur. The probability filter used to modify ACE works especially well on a permissive control since the closed filter (or zero ACE) will not cause any control which will attempt to open or activate the filter. All filter activations are caused by the power system loads and frequency shifts.

A mandatory allocator attempts to hold all plants at a basepoint. The plants move their power in response to the ACE but when the ACE is zero, the plants return toward the basepoint. This system works well when generators have severe constraints. The ACE is always perturbed as soon as it is zero unless the unlikely situation occurs where all the plant basepoints match the required system generation.

Actual allocators of the various AGC controllers usually use a combination of permissive and mandatory operation. Some examples include (1) placing baseload on mandatory control with basepoints and the AGC generators on permissive control without basepoints; (2) executing all baseload changes with all generators in mandatory and then operating the rest of the time in permissive mode; and (3) not allowing baseload changes to oppose the ACE (but if ACE is zero, the mandatory movement is made). There are numerous variations. However, the basic concept is that the permissive control provides good control with minimum activity and the mandatory control provides good capability to honor generator or powerplant constraints.

Participation Factors.—Participation factors are the crux of the allocating system. Unfortunately, they are also difficult concepts to define. The normal definition of participation factor is the fractional part of the ACE that is allocated to a specific generator or plant. In most systems, the participation factor is only a small part of the determination of the amount of ACE that is allocated to a plant. A few examples (not an exhaustive summary) of actual systems will demonstrate the various uses of participation factors.

Permissive control with plant and area requirements.—Figure 6 shows the basic block diagram for the allocator using station requirement, area regulation, and variable-gain, permissive control. The effect of variable gain is present because the switch to send ACE to a plant may be closed for more than one plant at a time and there are a variable number of plants or generators responding to the ACE. The permissive concept is that only ACE signals are sent to the plant, and even though the "station requirement" has a value, no control is present until an ACE is present. The AR (area regulation) is:

$$AR = ACE + \sum_{i=1}^{N} (B_{Gi} - P_{Gi})$$

where P_{Gi} is the monitored generator power for plant i and B_{Gi} is the basepoint setting that the dispatcher has selected for plant i. The total number of plants in the control area is N. The station requirement (or plant requirement) is

$$PR = P_G - B_G + P\left[ACE + \sum_{i=1}^{N} (B_{Gi} - P_{Gi})\right]$$

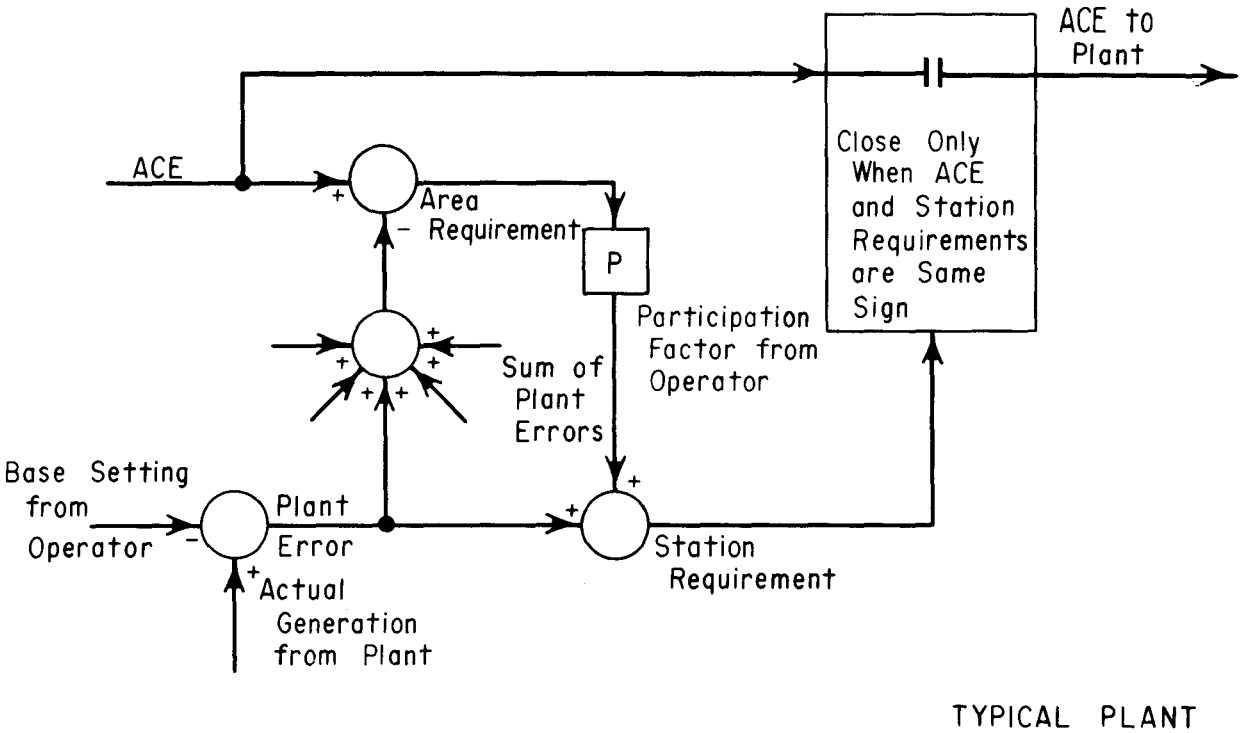

Figure 6.—Example allocator with variable-gain, permissive control with area requirement and plant requirement.

where P_G is the monitored plant generation, B_G is the basepoint for the plant and P is the participation factor selected by the dispatcher. The sum of all the participation factors for all the plants should be 100 percent.

For control analysis, the "participation" of the plant is not the participation factor alone but the fact that ACE and PR are the same sign. The participation factor actually acts as a bias to determine which plant will be favored to receive ACE. However, a plant may receive ACE even if the participation factor is zero. Note that the difference between plants on "automatic" and plants on "baseload" is that the plants on baseload have a zero participation factor. Also, positive ACE, AR, and PR indicate the generation should be reduced.

Mandatory control with plant requirements and area regulations.—Figure 7 shows the basic block diagram for the allocator. The concept looks very much the same as figure 6 as far as the form of the equations. However, a more careful search will show that ACE is not ever sent directly to the plant. Rather the plant requirement is sent to the plant and ACE is only one of the components.

The plant requirement is:

$$PR = P_G - B_G + P\left[ACE + \sum_{i=1}^{N}(B_{Gi} - P_{Gi})\right]$$

where the variables are the same as in the previous example. If all the plant requirements of this example are summed together,

$$\sum_{i=1}^{N} PR = \sum_{i=1}^{N} P_{Gi} - \sum_{i=1}^{N} B_{Gi} + \sum_{i=1}^{N} P\left[ACE + \sum_{k=1}^{N}(B_{Gk} - P_{Gk})\right]$$

where $\sum_{i=1}^{N} P$ is always 100 percent. Thus

$$\sum_{i=1}^{N} PR = ACE$$

and the system is "mandatory" in the form that control signals will be sent even if ACE is zero, but since the sum of all control signals

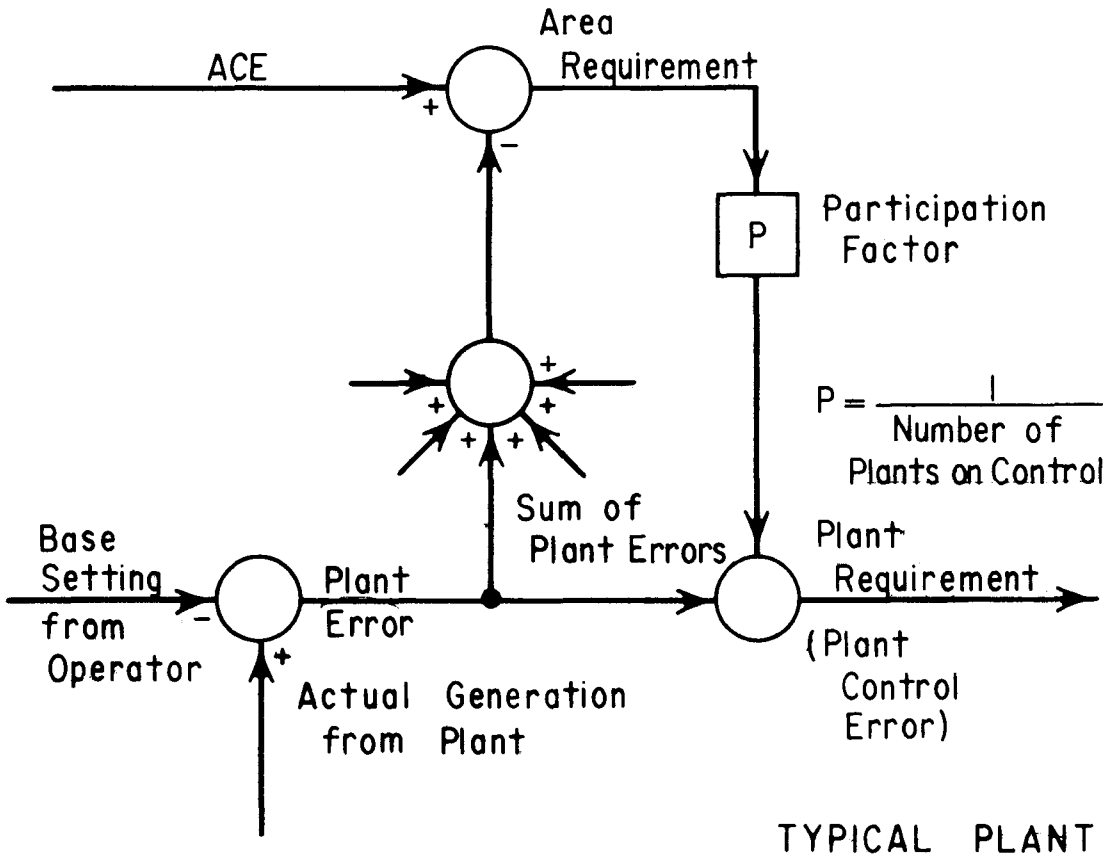

Figure 7.—Example allocator with mandatory control with area requirement and plant requirement.

is ACE, the system is somewhat like "permissive" control. In theory, the control is very good. In practice, the response of the plants to the control signals will not be proportional to ACE because each plant may have a different gain to the plant requirement. The concept will work but perturbations of ACE will continually occur as the plants seek a balance point among themselves. This control exibits more activity than the purely permissive controls.

In this example, the baseload plants simply have zero participation factor (in practice they also have a frequency regulation term while in baseload). Also, the participation factor is simply 100 percent divided by the number of plants on automatic control. This implies that all plants are approximately the same size and will respond nearly the same for a plant requirement signal.

This type of control can be made more permissive by limiting the plant requirement. When this is done, the concept of the total PR being equal to ACE is lost. Ways of providing more permissive control are:

- Limit the PR if it opposes the ACE. If ACE is zero, or not in opposition, the PR is not limited.

- Set PR to zero if the PR opposes the ACE. If ACE is zero or not in opposition, send the PR.

- Set the PR to zero if the ACE is zero or opposes the PR. If ACE does not oppose the PR, send the PR.

- Set the participation factor to zero and PR to zero if ACE is zero or opposes the PR. Then the participation factor is 100 percent divided by the number of plants on control and have a PR that aids ACE.

The progression from the first to the third concept tends to reduce activity but also allows the gain on ACE to become more variable. The

last concept is nearly the permissive control of the first example except the gain is more constant. The mandatory changes are removed and a plant will respond only to signals in phase with the ACE.

Permissive control with participation factors based on plant limits.—Figure 8 shows the signals used in a permissive automatic control with participation factors based on plant limits. It is noteworthy that the basepoint allocator is mandatory control (with a frequency regulation term). This system has basically the same equations as the first and second example. A major difference is that baseload plant errors are not summed into the area regulation but rather are used to directly bias the ACE for ramp changes. Because the participation factors are dynamic (they change with generator loading), the allocator can be reduced to a "floating" basepoint controller where no base setting is required for plant on automatic control.

If

$$PR = P_G - P_B + P \sum_{i=1}^{N} (P_{Bi} - P_{Gi}) + ACE$$

in the sum of all the participation factors in subsection 1, and if $P_{Bi} - P_{Gi}$ are summed only for units on control, then

$$\sum_{i=1}^{N} PR_i = ACE$$

However, if the basepoint (P_B) is eliminated, the same effect can be obtained from

$$PR = P(ACE) \text{ and}$$

$$\sum_{i=1}^{N} PR_i = ACE$$

because $\sum_{i=1}^{N} P = 100$ percent

The floating basepoint is superior to the fixed basepoint system in practice although they are the same theoretically. The fixed basepoint will cause ACE perturbation because the gains of the various plants are not equal. Whereas, the "floating" basepoint concept does not cause such perturbation.

The participation factor itself is calculated using the polarity of ACE. If ACE is positive, the generation is excessive and must be reduced. The actual plant power is subtracted from the lower power limit of the plant (determined by the dispatcher) and divided by the summation of all the differences of power and lower limit. Thus, for positive ACE,

$$P_i = \frac{P_G - P_{LL}}{\sum_{i=1}^{N} \left| P_{Gi} - P_{LLi} \right|}$$

where P_{LL} is the lower power limit of the plant. For negative ACE,

$$P_i = \frac{P_G - P_{UL}}{\sum_{i=1}^{N} \left| P_{Gi} - P_{ULi} \right|}$$

Where P_{UL} is the upper power limit of the plant. This procedure works well since the plant farthest away from the limit will have the highest participation and a plant at the limit will have no participation. Two problem areas exist however. If the $P_G - P_{LL}$ or $P_G - P_{UL}$ terms become negative, the control would reverse the plant requirement and the control would become mandatory. Thus, negative terms in the numerator of P_i must be set to zero. Also, the absolute value is not necessary since the negative terms in the summation should also be set to zero before summing. The second problem occurs when all plants are at or beyond the limit. Then the denominator becomes zero and P_i must be limited to a number below overflow within the computer.

The actual participation is:

$$P = \frac{P_i}{\Sigma P_i}$$

This relationship provides that the sum of P will be one. However, as the sum of P_i becomes zero because all plants are at zero, a zero over zero condition occurs which should be avoided. This relationship is not necessary if negative terms in the numerator and within the absolute value of the denominator are set to zero. The possibility of having no participation is present and should be brought to the operators attention.

An additional approach of changing all plant limits to emergency limits when all participation factors are zero would provide automatic emergency allocation.

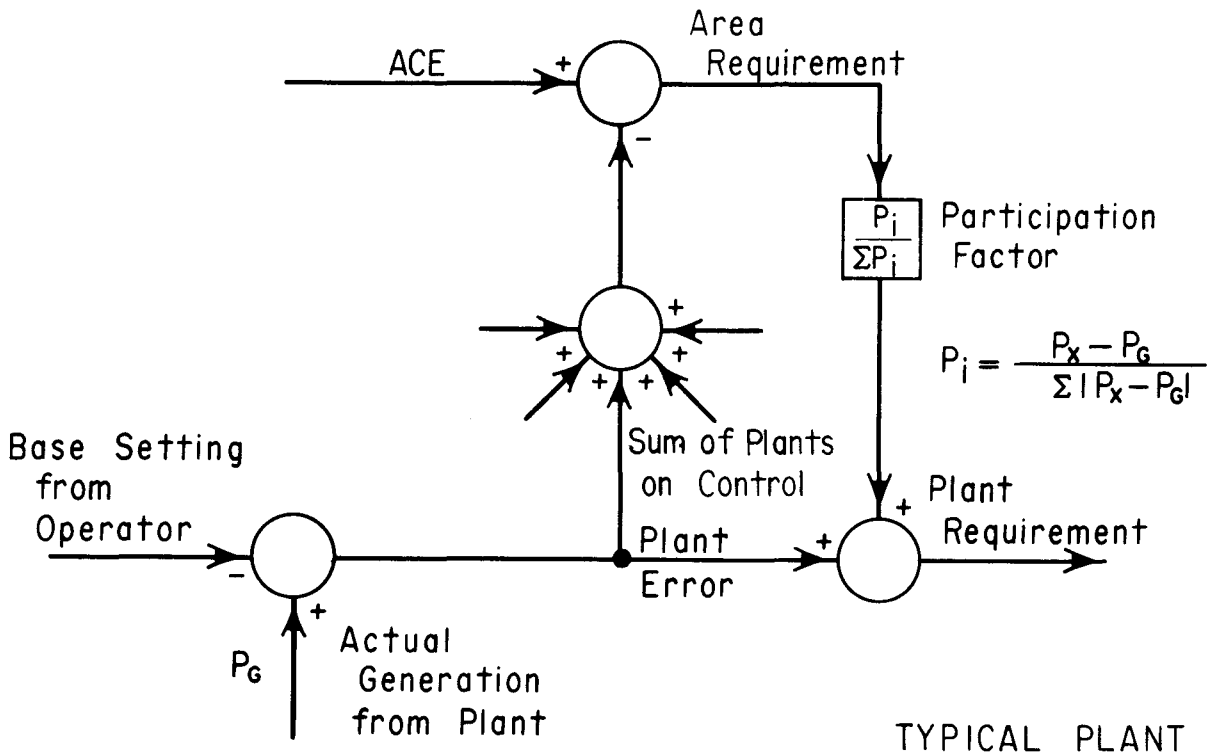

Figure 8.—Example allocator with permissive control and participation factors based on plant limits. (P_x = Upper plant limit for - ACE and lower plant limit for + ACE. Limits are entered by operator. P_G = Actual generation from plant.)

The mandatory baseload system is not really compatible with the above concept. An attempt to overcome baseload changes by biasing ACE with baseload changes helps overcome some of the problem, but still causes perturbations to ACE which the floating base point system for automatic generation attempted to eliminate. If a plant is required to have specific ramp rates and mandatory settings, the plant error (i.e., P_G - P_B) should be subtracted from ACE rather than the change of P_B only, and ACE will perturb less (theoretically, not at all). However, if the loading of a plant can be permissive, the upper and lower limit could be set to the desired basepoint. Then loading would be done according to the needs of ACE. Also changing limits in an emercency would automatically include the plant baseload in the allocator.

There are many forms of participation factors besides the "coefficient-of-ACE" factor described in the preceeding three examples. Circular allocators will load plants according to the size of the plant similar to the third example, except small allocations during each pass (which may be within a deadband in the generator controller) are avoided. Therefore, a response to the loading signal is usually more precise, the gain of the system is held more constant, and the baseload units can be used if the rate of system response becomes too low.

Participation factors are also used in economic dispatch. The concept of economic dispatch is outside the scope of this report.

Emergency Assist and Standby Generation.—When the ACE becomes very large, most AGC systems have provision for providing very high gain and, thus, quick generation response. Usually, the resulting gain is actually larger than normal control would allow. If the gain is active for more than the minimum time to reverse the ACE trend, the AGC will tend to become unstable. The emergency assist may take many forms.

- All plants connected to the AGC system including baseload plants are sent the ACE when the ACE exceeds a present limit. There is no

participation and all plants receive the ACE, thus multiplying the effect of the ACE many times. When the ACE recrosses a preset value (a little hysteresis is used), normal allocation procedures are then used. On special occasions, the ACE may oscillate several times but will stabilize.

- A baseload assist system is used when the ACE becomes large or when the ACE cannot be allocated to control plants (because of limits). The gain is changed by providing a second allocator to allocate to the baseload plants in the same manner that the main allocator used. Therefore, the gain is approximately doubled (unless the main allocator cannot allocate due to limits). If the ACE is large, plants on "standby" are included in the allocation. These "standby" plants have their generation controlled at the plant, and in "emergency" conditions, the ACE is used by the plant.

The emergency assist is actually an attempt to reduce the system droop. The speed-level motors move the speed reference of the governor so that more generation is changed than would have been possible with the droop alone. Care must be taken not to cause a larger disturbance than the original disturbance.

Signal to the Plant.—Once the allocator has calculated the plant requirement, the signal must be transmitted to the plant. This communication can take place in several ways.

Pulse systems.—The size of the ACE is periodically converted to pulse width modulation and sent to the plant. There is a definite period to the pulse (2 to 6 seconds) and the width of the pulse has a maximum value. Since the speed-level motor will integrate these pulses (after being allocated to the generators at the plant), the system is considered a "rate-limited" control system. The generation can move only at a certain maximum rate limited by the maximum speed of the motor and the maximum pulse width. Thus, the gain change during emergency assists actually increases the rate limit by using more than one plant.

The plant is in a "rate-limited" power feedback loop if measured plant power is used in the AGC allocator. Since the rate-limited control automatically reduces gain when the speed of the disturbance is rapid, system damping is not seriously impaired. Further power-rate feedback is usually not provided and the control gain around the plant power control is usually low.

Plant control error.—The plant control error is sent directly to the plant by digital or analog transmission. This system provides an accurate power controller around the plant and has a very definite maximum gain for the SLM integrator. If the gain becomes too high, oscillations develop. One method of controlling the gain is to allocate the error at the plant in the form of pulses to each generator using a sophisticated plant allocator. This control system must also be rate limited to ensure that system damping is not impaired.

Power setpoint signal.—Another method for controlling the plant is the use of a power setpoint transmitted either with analog or digital equipment. The allocated error must be integrated in the AGC controller (replacing the SLM integration). Then the powerplant may use an allocator and closed-loop power controller. This places the closed-loop controller at the individual generator and also allows the use of local constraints (breakers, gate limit, rough zone, efficiency, temperature, etc.) to modify the individual controllers. Usually a rate-of-power or a predictor closed-loop controller is used [35, 65]. The rate-of-power controller usually has a rate-limit or loading rate included. The predictor controller does not require a rate-limit system and may respond at nearly the maximum linear rate of the governor (if the windings, fuel handling equipment, or river level can tolerate the loading speeds). This speed of response is not usually needed by by the AGC, however.

Plant Regulation Included in the Signal.—Since all AGC allocators, with the possible exception of the floating basepoint concept, use a form of closed-loop power control, the long term effect of the droop of the governor (or the speed regulation of the governor) will be negated. The basic concept of the AGC system is to use the droop characteristic of the system as a basic assumption and reregulate the system around the droop characteristic. The bias setting on the frequency component of ACE includes the system droop characteristic. Thus, removal of the droop by a constant power controller opposes the basic AGC concepts and opposes the natural system response.

It is preferable to have every generator controller which is not being directly influenced by ACE to have some type of frequency bias allowing the droop to work. Even plants directly affected by ACE should have some type of frequency bias to

aid in system load stability although the ACE may overcome the frequency bias over the long term. This concept becomes more important as the strength of the closed-loop power controller around the plant increases.

Another problem in plant control is the governor with the dashpot bypassed, or governors that have been tuned to give very quick responses. These governors usually depend on the power system for control loop damping and they will not operate with an isolated load. The power system can support many governors of this nature but there is a maximum limit. Unfortunately, when the limit is reached, system oscillations may begin without any obvious cause or warning. Thus, the number of "fast" governors should be kept to a minimum.

Calculations Useful for Plant Allocation.—Several calculations and tabulations are useful for operation of the AGC and, in particular, for determining the capability of the system in the event of a disturbance.

Plant response errors.—A powerplant may not respond to AGC commands for a variety of reasons including all generators at limits or loss of communications. This condition may be detected by finding the plant power outside a deadband from the base generation plus plant requirement. Another method is to monitor the rate of change of plant power to determine if the direction of the plant requirement and plant power correspond. Once the slow response has been detected, a signal may be sent to the plant to determine if any response is possible. If no response is found the plant should be removed from allocation and an alarm generated.

Disturbances outside the AGC system.—Often, severe disturbances outside the AGC area may require action by the dispatcher or system operator. Such disturbances can be alarmed to the operator by using the tieline power error and the frequency bias terms usually added for ACE. However, the two are subtracted to give the "ACE" for the neighboring systems. If the disturbance is within the local system, the ACE will become large. When the disturbance is outside the system, the ACE should remain small, but the "reverse ACE" will become large. If the equivalent external system bias can be found, the signal may contain the actual disturbance size information.

The regulation margins.—The difference between the present generation and the maximum capability (or limit of generation) for each plant on automatic should be calculated. Also, the difference between the minimum plant power limit and the present power output for all plants on automatic should be calculated. These two calculations will provide alarms when plants can be put on or taken off automatic to ensure an adequate operating range for the AGC system.

Spinning reserve.—The spinning reserve is used as an indicator of system reliability and is usually the difference between the total maximum limit of generation for every generator on-line and the present power output of every generator on line.

QUALITY OF THE AGC

The NAPSIC operating guide [9] defines a minimum operating criteria. This criteria is summarized in table 1.

Table 1.—*AGC minimum operating criteria*

For normal system conditions:

- Area control error (ACE) must equal zero at least one time in all 10-minute periods.
- The average deviation of ACE from zero for all 10-minute periods must be within a specified limit, L_d, based on system generation. The value of L_d can be found from calculations in the NAPSIC manual and is based on maximum rate of change of load.

For disturbance conditions:

- ACE must be returned to zero within 10 minutes.
- Corrective action must be observable in the ACE within 1 minute of the disturbance.

This criteria is easy to use since it depends only on measurements taken from chart recordings of ACE.

Theoretically, each AGC system is "independent" of the neighboring AGC systems since the addition of frequency bias to the tieline error results in an ACE that should respond only to disturbances internal to the system and ignore

disturbances in neighboring systems. In practice, the setting of the frequency bias is not equivalent to the system characteristics, and interaction does occur.

Thus, the ACE of a given system cannot be relied upon for fine tuning of an AGC system. The ACE will indicate course adjustments improvement, but the ACE changes due to activity in a neighboring system will mask fine adjustments and improvements will not be conclusively indicated.

Another problem lies in the difficulty of the lack of definition of good AGC operation. The definition seems to cover at least three areas. First, the integral of ACE should be maintained as close to zero as possible. Second, the AGC should respond to transients and disturbances, and, third, the AGC must not create unnecessary operation of the mechanical equipment in the system. Unfortunately, only the first area can be analytically measured. The second and third areas are defined more by opinion than by analytical testing.

A possible solution would be to develop an "index" of performance which, over a 10-minute period, would measure the activity of the ACE, the integral of ACE, and the activity of commands to the speed-level motor. A single number of "goodness" would be generated. However, interpretation of this number may be difficult and involve opinions and may cause more problems than it solves.

Another possible solution is to use a fast Fourier transform calculated every 10 minutes for ACE, speed-level motor activity, and the integral of ACE. Then comparisons of the amplitude of the frequency components could be made. Because the response of various frequencies may not be as dependent on neighboring AGC systems (each system will have characteristic frequencies of activity), the effects of fine tuning of filters and other constants may be easier to see. However, in the final analysis, the improvement will still be a matter of opinion.

BIBLIOGRAPHY

GENERAL AGC OPERATION

1 A. R. Benson, "Control of Generation in the U.S. Columbia River Power System," Bonneville Power Administration, 1960.

2 W. R. Brownlee, "How to Account for Energy in Complex Interconnections," Electrical World, October 23, 1961.

3 H. J. Fiedler, "Power System Operation," Indian Journal of Power and River Valley Development," vol. 21, No. 7, July 1971.

4 C. J. Frank, "Generation Control Research Opportunities," Power System Control Workshop, San Louis Obispo, CA, April 1977.

5 H. J. Holley and J. C. Hung, "Load-Frequency Control of an n-Area Power System Interconnected by AC Lines and DC Links," International Electrical, Electronics Conference, Toronto, Ontario, October 1971.

6 Mochon, "Power System Planning and Operations: Future Problems and Research Needs," EPRI EL-377-SR, February 1977, Henniker Conference 1976.

7 R. Podmore, "Recommendations for Control of Jointly Owned Generating Units," System Control, Inc., September 1975.

8 R. O. Usry, "Inadvertent Energy Interchange - Causes, Remedies, and Balancing," IEEE PAS, vol. PAS-87, No. 2, February 1968.

[9] _____, "NAPSIC Operating Manual," North American Power Systems Interconnection Committee, April 1976.

10 L. A. Mollman and T. Kennedy, "Interrelationship of Time Error, Frequency Deviation, and Inadvertent Flow on an Interconnected System," IEEE PAS, vol. PAS 87, No. 2, February 1968.

AGC THEORY

[11] N. Cohn, "Energy Balancing On Interconnected Systems," Proceedings of the Americal Power Conference, vol. 35, 1973.

[12] N. Cohn, "Control of Generation and Power Flows on Interconnected Systems," John Wiley and Sons, 1966.

13 N. Cohn, "A Step-by-Step Analysis of Load-Frequency Control Showing the System Regulating Response Associated with Frequency Bias," presented at the Interconnected Systems Committee Meeting, Des Moines, IA, 1956.

14 N. Cohn, "Techniques for Improving the Control of Bulk Power Transfers on Interconnected Systems," IEEE PAS, vol. PAS 90, No. 6, Nov/Dec 1971.

15 N. Cohn, "The Use of Synchronized Time and Frequency Standards to Improve Control of Interconnected Electric Power Systems," presented to North American Power System Interconnection Committee, Atlanta, GA, February 1969.

16 N. Cohn, "Considerations in the Regulation of Interconnected Areas," IEEE PAS, vol. PAS 86, No. 12, December 1967.

17 N. Cohn, "Research Opportunities in the Control of Bulk Power and Energy Transfers on the Interconnected Systems," EPRI EL-377-SR, February 1977, pp 6-1 through 6-30, Henniker Conference, 1976.

18 N. Cohn, "Some New Thoughts on Energy Balancing and Time Correction on Interconnected Systems," Power System Control workshop, San Louis Obispo, CA, April 1977.

19 N. Cohn, "Area Wide Generation Control - A New Method for Interconnected Systems," Electric Light and Power, June, July, August 1953.

20 N. Cohn, "Some Aspects of Tieline Bias Control on Interconnected Power Systems," AIEE Transactions, February 1957.

21 C. Concordia and L. K. Kirdhmayer, "Tieline Power and Frequency Control of Electric Power Systems, Part I and II," AIEE Transactions, June 1953 and April 1954.

22 R. L. Cresap, D. N. Scott, and C. W. Taylor, "Closed Loop Digital Hydroplant Controller for Automatic Generation Control," Bonneville Power Administration, September 1973.

23 J. F. Engle, "Effect of Grand Coulee Derivative Type Governor on Automatic Generation Control," Bonneville Power Administration, July 1974.

24 D. N. Ewart, "Automatic Generation Control - Performance Under Normal Conditions," Henniker Conference 1975.

25 C. W. Ross and K. W. Goff, "An Experimental Correlation Analyzer for Measuring System Dynamics," IEEE Transactions on Communication and Electronics, vol. 82, 1963.

26 _____, "IEEE Standard Definition of Terms for Automatic Generation Control," IEEE Standard No. 94, IEEE PAS, July/August 1970.

27 F. P. deMello, R. J. Mills, and W. F. B'Rells, "Automatic Generation Control Part II - Digital Control Techniques," IEEE PAS, March/April 1973.

28 F.P. deMello, R. J. Mills, and W. F. B'Rells, "Automatic Generation Control Part I - Process Modeling," IEEE PAS, March/April 1973.

[29] C. E. Fosha, Jr., and O. I. Elgerd, "The Megawatt-Frequency Control Problem: A New Approach Via Optimal Control Theory," IEEE PAS, vol. PAS 89, No. 4, April 1970.

[30] O. I. Elgerd and C. E. Fosha, Jr., "Optimum Megawatt-Frequency Control of Multiarea Electric Energy Systems," IEEE PAS, vol. PAS 89, No. 4, April 1970.

31 K. Honda, "A Filtering Method Applied to Load Frequency Control," Electrical Engineering in Japan, vol. 93, No. 4, 1973.

32 T. W. Jenkens, Jr. and B. Littman, Response Capability in the Control of Large Generating Units," IEEE Paper 71 CP 73 PWR, IEEE Winter Power Meeting, January 1971.

33 C. W. Ross, "Error Adaptive Control Computer for Interconnected Power Systems," IEEE PAS, vol. PAS 84, No. 7, July 1966.

34 C. W. Ross, "A Comprehensive Direct Digital Load Frequency Controller," IEEE PICA Conference Record, Pittsburgh, PA, 1967.

[35] D. N. Scott, R. L. Cresap, R. F. Priebe, D. E. Tebrink, and K. A. Takeuchi, "Closed Loop Digital Automatic Generation Controller," IEEE Conference paper C 73, July 1973.

36 C. Taylor, "Effect of Sampling Rates on Digital Automatic Generation Control," Bonneville Power Administration, August 1974.

37 J. Weiss, "Digital Load Frequency Control in Multiarea Power System," Fourth IFAC/IFIP International Conference on Digital Computer Applications to Process Control, Zurich, Switzerland, March 1974.

38 J. L. Willems, "Sensitivity Analysis of the Optimum Performance of Conventional Load-Frequency Control," IEEE PAS, vol. PAS 93, 1974.

39 J. Zaborszki, A. K. Subramanian, and K. M. Lu, "Control Interfaces In Generation Allocation," Henniker Conference 1975.

GENERAL AGC PERFORMANCE

40 C. W. Ross and T. A. Green, "Dynamic Performance Evaluation of a Computer Controlled Electric Power System," IEEE PAS, vol. PAS 91, No. 4, Sept - Oct 1972.

41 C. W. Taylor, "Analysis of Dittmer Power System Frequency Deviation Records," Bonneville Power Administration, March 1976.

AGC SIMULATION

[42] C. W. Taylor and R. L. Cresap, "Real-Time Power System Simulation for Automatic Generation Control," IEEE PAS, vol. PAS-95, No. 1, January/February 1976.

43 J. E. Van Ness and R. Rajagopalan, "Effects of Digital Sampling Rate on System Stability," PICA Conference Record, Pittsburgh, PA, May 1967.

44 K. N. Stanton, "Power System Dynamic Energy Balance," Proceedings of the Symposium on Real-Time Control of Electric Power Systems, Brown, Boveri, and Company Limited, Baden, Switzerland, 1976.

45 L. H. Fink, L. M. Smith, and R. P. Schulz, "Dynamic Mathematical Model of Interconnected Electric Power System," Modeling and Simulation, IEEE/ISA, vol. 5, Pittsburgh, PA., 1974.

46 L. M. Smith, L. H. Fink, and R. P. Schulz, "Use of Computer Model of Interconnected Power System to Assess Generation Control Strategies," IEEE PAS, vol. PAS 94, No. 5, Sept/Oct 1975.

47 H. G. Kwatny, K. C. Kalnitsky, and A. Bhatt, "An Optimal Tracking Approach To Load-Frequency Control," IEEE PAS, vol. PAS 94, No. 5, Sept/Oct 1975.

48 M. Ehsan and M. J. Short, "Digital Simulation for On-Line Load-Frequency Control Studies," IEEE, 1976.

ADVANCED CONTROL THEORY

49 R. Aggarwal and F. Bergseth, "Large Signal Dynamics of Load Frequency Control Systems and Their Optimization Using Nonlinear Programming, I and II," IEEE PAS, vol. PAS 87, No. 2, Feb 1968.

50 R. K. Cavin, M. C. Budge, Jr., and P. Rasmussen, "An Optimal Linear Systems Approach to Load-Frequency Control," IEEE PAS, vol. PAS 90, No. 6, Nov/Dec 1971.

51 T. W. Reddoch, P. M. Julich, T. O. Tan, and E. C. Tacker, "Models and Performance Functionals for Load Frequency Control in Interconnected Power Systems," IEEE Conference on Decision and Control, Miami Beach, FL, December 1971.

52 J. D. Glover and F. C. Schweppe, "Advanced Load Frequency Control," IEEE PAS, vol. PAS 91, No. 5, Sept/Oct 1972.

53 S. M. Miniesy and E. V. Bohn, "Optimum Load Frequency Continuous Control with Unknown Deterministic Power Demand," IEEE PAS, vol. PAS 91, No. 5, Sept/Oct 1972.

54 E. V. Bohn and S. M. Miniesy, "Optimum Load-Frequency Sampled - Data Control with Randomly Varying System Disturbances," IEEE PAS, vol. PAS 91, No. 5, Sept/Oct 1972.

55 M. Calovic, "Linear Regulator Design for a Load and Frequency Control," IEEE PAS 91, No. 6, Nov/Dec 1972.

56 E. C. Tacker, C. C. Lee, T. W. Reddoch, T. O. Tan, and P. M. Julich, "Optimal Control of Interconnected Electric Energy Systems-A New Formulation," Proceedings of IEEE, vol 60, No. 10, October 1972.

57 E. C. Tacker, C. C. Lee, P. M. Julich, and T. O. Tan, "Models and Optimal Stochastic Controller Designs for Interconnected Power Systems, "Region III, IEEE Conference, 1972.

58 W. R. Barcelo. "Effect of Power Plant Responses of Optimum Load Frequency Control System Design," IEEE PAS, vol. PAS 92, No. 1, Jan/Feb 1973.

59 N. G. Malek, O. T. Tan. P. M. Julich, and E. C. Tacker, "Trajectory-Sensitive Design of Load-Frequency Control Systems," Proceedings IEEE, vol. 120, No. 10, October 1973.

60 E. C. Tacker, T. W. Reddoch, O. T. Tan, and T. D. Linton, "Automatic Generation Control of Electric Energy Systems - A Simulation Study," IEEE Trans on System, Man, and Cybernetics, vol. SMC 3, No. 4, July 1973.

61 T. W. Reddoch, P. M. Julich, G. J. Burchert, Jr., O. T. Tan, and E. C. Tacker, "On the Use of Advanced Control Theory in the Design of Automatic Generation Controllers," IEEE Conference Paper C 73, 101-3, January 1973.

62 V. R. Moorthi and R. P. Aggarwal, "Damping Effects on Excitation Control in Load-Frequency Control System," Proc. IEEE, vol. 121, No. 11, November 1974.

63 O. T. Tan, E. C. Tacker, and D. R. Fischer, "Automatic Generation Control Systems Containing Governor Dead Band," IEEE Conference Paper C 74, 127-7, January 1974.

64 T. W. Reddoch, "Load Frequency Control Performance Criteria With Reference to the Use of Advanced Control Theory," Henniker Conference, 1975.

DIGITAL LOAD CONTROL

[65] W. B. Gish, "Digital Load Control for Hydroelectric Powerplants," U. S. Department of the Interior, Bureau of Reclamation, REC-ERC-77-10, August 1977.

[66] W. B. Gish, T. R. Whittemore, and U. Milano, "Grand Coulee Third Interim Controller Prototype Digital Load and Voltage Control," U.S. Department of the Interior, Bureau of Reclamation, REC-ERC-76-8, July 1976.

GPO 848-069

ABSTRACT

The concept of automatic generation control is often considered complex because of the freedom each utility has in choosing individual characteristics within a basic control philosophy. This report endeavors to separate the basic philosophy from the individual characteristics to allow a clearer understanding of the control philosophy. Discussions of individual characteristics used by the Bureau of Reclamation are also presented.

ABSTRACT

The concept of automatic generation control is often considered complex because of the freedom each utility has in choosing individual characteristics within a basic control philosophy. This report endeavors to separate the basic philosophy from the individual characteristics to allow a clearer understanding of the control philosophy. Discussions of individual characteristics used by the Bureau of Reclamation are also presented.

ABSTRACT

The concept of automatic generation control is often considered complex because of the freedom each utility has in choosing individual characteristics within a basic control philosophy. This report endeavors to separate the basic philosophy from the individual characteristics to allow a clearer understanding of the control philosophy. Discussions of individual characteristics used by the Bureau of Reclamation are also presented.

ABSTRACT

The concept of automatic generation control is often considered complex because of the freedom each utility has in choosing individual characteristics within a basic control philosophy. This report endeavors to separate the basic philosophy from the individual characteristics to allow a clearer understanding of the control philosophy. Discussions of individual characteristics used by the Bureau of Reclamation are also presented.

REC-ERC-78-6
Gish, W. B.
AUTOMATIC GENERATION CONTROL - NOTES AND OBSERVATIONS
Bur Reclam Rep REC-ERC-78-6, Div Res, Oct 1978. Bureau of Reclamation, Denver 25 p., 8 fig, 66 ref

DESCRIPTORS—/ *load-frequency control/ *interconnected systems/ *power system operations/ *power interchange/ algorithms/ automatic control/ control systems/ governors/ power dispatching/ baseloads/ generating capacity/ hydroelectric power/ electric generators/ computer applications

IDENTIFIERS—/ automatic generation control

COSATI Field/Group 09B COWRR: 0902

REC-ERC-78-6
Gish, W. B.
AUTOMATIC GENERATION CONTROL - NOTES AND OBSERVATIONS
Bur Reclam Rep REC-ERC-78-6, Div Res, Oct 1978. Bureau of Reclamation, Denver 25 p., 8 fig, 66 ref

DESCRIPTORS—/ *load-frequency control/ *interconnected systems/ *power system operations/ *power interchange/ algorithms/ automatic control/ control systems/ governors/ power dispatching/ baseloads/ generating capacity/ hydroelectric power/ electric generators/ computer applications

IDENTIFIERS—/ automatic generation control

COSATI Field/Group 09B COWRR: 0902

REC-ERC-78-6
Gish, W. B.
AUTOMATIC GENERATION CONTROL - NOTES AND OBSERVATIONS
Bur Reclam Rep REC-ERC-78-6, Div Res, Oct 1978. Bureau of Reclamation, Denver 25 p., 8 fig, 66 ref

DESCRIPTORS—/ *load-frequency control/ *interconnected systems/ *power system operations/ *power interchange/ algorithms/ automatic control/ control systems/ governors/ power dispatching/ baseloads/ generating capacity/ hydroelectric power/ electric generators/ computer applications

IDENTIFIERS—/ automatic generation control

COSATI Field/Group 09B COWRR: 0902

REC-ERC-78-6
Gish, W. B.
AUTOMATIC GENERATION CONTROL - NOTES AND OBSERVATIONS
Bur Reclam Rep REC-ERC-78-6, Div Res, Oct 1978. Bureau of Reclamation, Denver 25 p., 8 fig, 66 ref

DESCRIPTORS—/ *load-frequency control/ *interconnected systems/ *power system operations/ *power interchange/ algorithms/ automatic control/ control systems/ governors/ power dispatching/ baseloads/ generating capacity/ hydroelectric power/ electric generators/ computer applications

IDENTIFIERS—/ automatic generation control

COSATI Field/Group 09B COWRR: 0902