RECLAMATION

Managing Water in the West

Guide To Concrete Repair

Second Edition

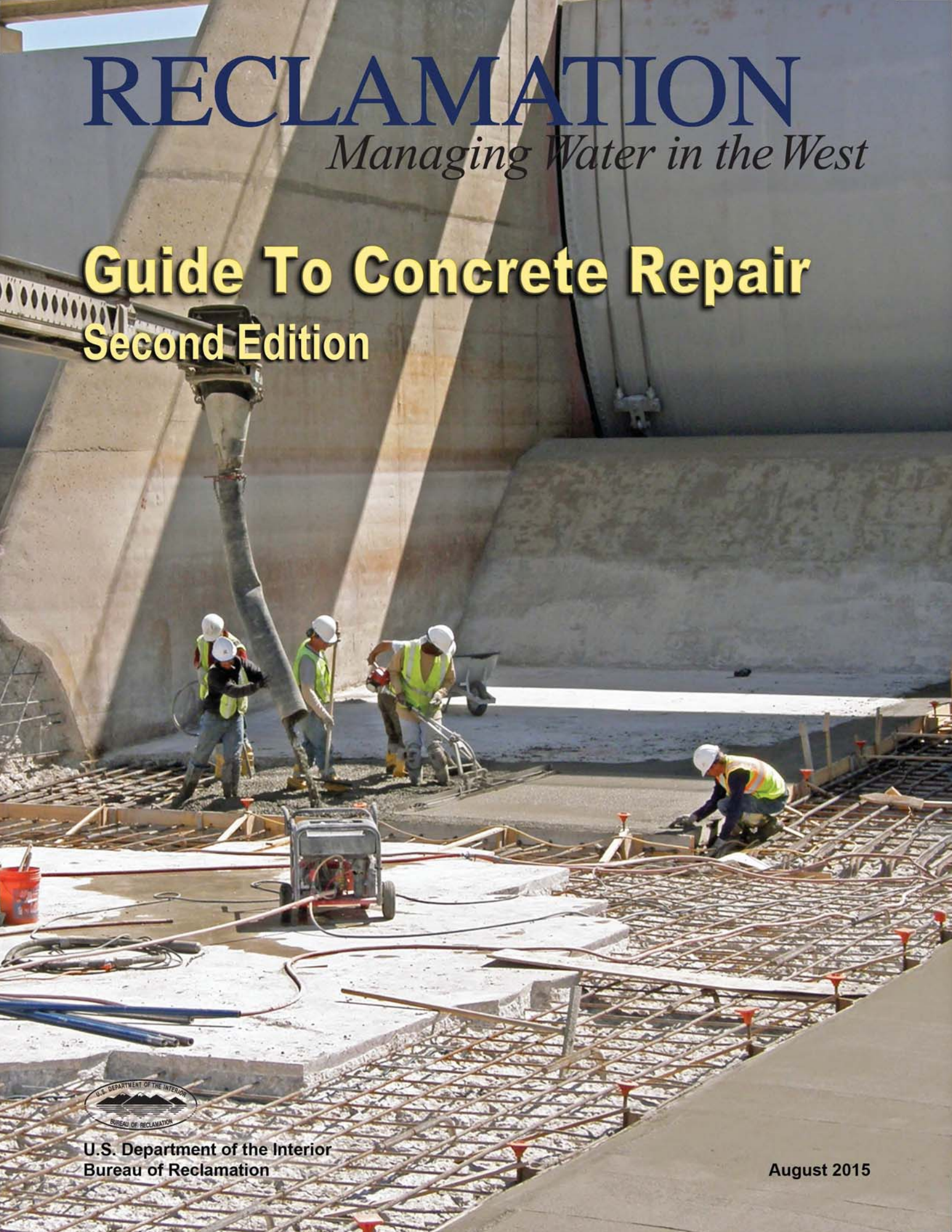

U.S. Department of the Interior
Bureau of Reclamation

August 2015

Guide to Concrete Repair

Second Edition

Prepared by:

Kurt F. von Fay, Civil Engineer
Concrete, Geotechnical, and Structural Laboratory

U.S. Department of the Interior
Bureau of Reclamation
Technical Service Center

August 2015

Mission Statements

The U.S. Department of the Interior protects America's natural resources and heritage, honors our cultures and tribal communities, and supplies the energy to power our future.

The mission of the Bureau of Reclamation is to manage, develop, and protect water and related resources in an environmentally and economically sound manner in the interest of the American public.

Acknowledgments

Acknowledgment is due the original author of this guide, W. Glenn Smoak, for all his efforts to prepare the first edition.

For this edition, many people were involved in conducting research and field work, which provided valuable information for this update, and their contributions and hard work are greatly appreciated. They include Kurt D. Mitchell, Richard Pepin, Gregg Day, Jim Bowen, Dr. Alexander Vaysburd, Dr. Benoit Bissonnette, Maxim Morency, Brandon Poos, Westin Joy, David (Warren) Starbuck, Dr. Matthew Klein, and John (Bret) Robertson. Dr. William F. Kepler obtained much of the funding to prepare this updated guide. Nancy Arthur worked extensively on reviewing and editing the guide specifications sections and was a great help making sure they said what I meant to say. Teri Manross deserves recognition for the numerous hours she put into reviewing, editing and formatting this Guide. The assistance of these and numerous others is gratefully acknowledged.

Contents

PART I: RECLAMATION'S METHODOLOGY FOR CONCRETE MAINTENANCE AND REPAIR

Page

A. Repair and Maintenance of Concrete

1. Introduction I-1
   a. Concrete Repair and Maintenance System I-2
2. Maintenance of Concrete I-3
3. General Requirements for Quality Repair I-8
   a. Workmanship I-9
   b. Procedures I-9
   c. Materials I-10

B. Using Reclamation's Concrete Maintenance and Repair System

1. Determine the Cause(s) of Damage I-13
2. Evaluate the Extent of Damage I-16
3. Evaluate the Need to Repair I-19
4. Select the Repair Method and Material I-25
5. Prepare the Existing Concrete for Repair I-26
   a. Saw Cut Perimeters I-26
   b. Concrete Removal I-29
   c. Reinforcing Steel Preparation I-34
   d. Primary Cleaning I-36
   e. Protecting the Prepared Area I-37
   f. Secondary Cleaning I-37
6. Apply the Repair Method I-39
7. Cure the Repair Properly I-39

C. Causes of Damage to Concrete

1. Excess Concrete Mix Water I-41
2. Faulty Design I-43
3. Construction Defects I-48
4. Sulfate Deterioration I-51
5. Alkali-Aggregate Reaction I-52
6. Deterioration Caused by Cyclic Freezing and Thawing Weather I-56
7. Abrasion-Erosion Damage I-60
8. Cavitation Damage I-65
9. Corrosion of Reinforcing Steel I-68

Contents (continued)

Page

10. Acid Exposure I-70
11. Cracking I-72
12. Structural Overloads I-81
13. Multiple Causes of Damage I-83

D. Standard Methods of Concrete Repair

1. Sealers and Coatings I-88
   a. High Molecular Weight Methacrylic Sealing Compounds I-90
      (1) Preparation I-91
      (2) Materials I-92
      (3) Application I-92
      (4) Curing and Protection I-93
   b. Low Viscosity Epoxy Sealing Compounds I-93
      (1) Preparation I-94
      (2) Materials I-95
      (3) Application I-96
      (4) Curing and Protection I-96
   c. Silane and Siloxane Sealing Compound I-96
      (1) Preparation I-97
      (2) Materials I-97
      (3) Application I-98
      (4) Curing I-99
   d. Coating Compounds for Concrete I-99
      (1) Preparation I-100
      (2) Application I-102
      (3) Curing I-103
2. Thin Repairs I-103
   a. Surface Grinding I-104
   b. Portland Cement Mortar I-105
      (1) Preparation I-106
      (2) Materials I-107
      (3) Application I-107
      (4) Curing I-108
   c. Dry Pack and Bonded Dry Pack I-108
      (1) Preparation I-109
         (a) Method 1 ..... I-110
         (b) Method 2 ..... I-110
         (c) Method 3 ..... I-110
      (2) Materials I-111

Contents (continued)

Page

(3) Application I-111
(4) Curing and Protection I-112
d. Polymer Concrete, Including Epoxy Mortar I-112
(1) Preparation I-114
(2) Materials I-115
(3) Mixing and Handling I-116
(4) Application I-118
(5) Curing I-120
(6) Storage I-121
e. Epoxy-Bonded Replacement Concrete I-121
(1) Preparation I-122
(2) Materials I-122
(3) Application I-123
(4) Curing I-124
f. Packaged Cementitious and Chemical Repair Mortars I-124
(1) Preparation I-125
(2) Application I-125
(3) Curing I-126
3. Thick Repairs I-127
a. Replacement Concrete I-127
(1) Preparation I-127
(2) Materials I-130
(3) Application I-131
(4) Curing and Protection I-133
b. Preplaced Aggregate Concrete I-134
(1) Preparation I-135
(2) Materials I-135
(3) Application I-136
(4) Curing I-138
c. Shotcrete I-138
(1) Preparation I-140
(2) Materials I-140
(3) Application I-141
(4) Curing I-141
d. Silica Fume Concrete I-141
(1) Preparation I-143
(2) Materials I-143
(3) Application I-143
(4) Curing I-144

Contents (continued)

Page

4. Crack and Water Leak Repairs I-144
   a. Resin Injection I-146
      (1) Epoxy Resins I-146
      (2) Polyurethane and Methacrylic Acrylate Resins I-147
      (3) Preparation I-149
      (4). Materials I-154
      (5) Injection Equipment I-155
      (6) Application I-159
         (a) Application of Epoxy Resin by Pressure Injection I-159
         (b) Application of Polyurethane Resin by Pressure Injection for Sealing Leaks I-162
      (7) Cleanup I-165

E. Nonstandard Methods of Repair

1. Use of Nonstandard Repair Methods I-167
   a. Preparation I-168
   b. Materials I-168
   c. Application I-168
   d. Curing I-168

Bibliography I-169

Figures

Figure *Page*

1 Freeze-thaw damage that could have been prevented by proper maintenance I-4
2 Removing the source of water properly would have resulted in significantly less damage I-5
3 Freeze-thaw damage that could have been reduced by changing operation of the structure I-7
4 Formwork used to maintain the existing joints in a spillway floor repair I-11
5 Poor quality aggregate used in concrete placed in the late 1960s led to the need for expensive repairs in the 2000s I-15
6 Obtaining concrete samples is very important to properly assess the cause and extent of damage I-15

Figures

Figure *Page*

7 Inspecting a spillway floor using steel bars to sound the concrete I-17
8 A drawing showing the original estimated limits of removal (black cross hatch) and the actual limits of removal (black and red cross hatch) I-18
9 A structure experiencing freeze-thaw deterioration that will not need repair for many years I-19
10 Freeze-thaw damage that should have been repaired before damage became so extensive I-20
11 Damage from absorptive aggregates I-20
12 Damage from absorptive aggregates deteriorating from freezing and thawing weather that extends several inches into the concrete I-21
13 Damage that appears serious, but because of the characteristics of the spillway, repairs are not needed immediately I-21
14 A spillway that appeared to be in good shape I-22
15 Abrasion erosion damage to the flip bucket and energy dissipaters I-24
16 After beginning concrete removal, the extent of damage was much worse than originally believed I-24
17 Coring through the temporary shotcrete repairs to obtain samples of concrete for testing and examination I-25
18 Using a large, rail-mounted saw to cut completely through a concrete slab I-27
19 Saw cutting the perimeter after hydrodemolition removed most of the concrete I-27
20 Examples of saw cut shapes I-28
21 Rounded corners are best I-29
22 Hydrodemolition using water pressure of 20,000 psi to remove about 6 inches of concrete I-30
23 The first calibration test resulted in excessive concrete removal and bent rebar I-31
24 Using a small electric chipping hammer to remove damaged concrete I-32
25 Shotblasting using a small unit prior to application of a healer-sealer (Sealers and Coatings) I-32
26 Sand blasting a concrete deck prior to application of a healer-sealer (Sealers and Coatings) I-33
27 A scabbler used to remove concrete I-33
28 View of the bits in a scabbler used to remove concrete I-34
29 A schematic of the proper method for concrete preparation for a concrete spall repair I-35

Figures

Figure *Page*

30 A schematic of the proper method for preparing a hole through a concrete wall I-36
31 A properly prepared area for repair to a spillway approach apron I-36
32 Using high-pressure water jetting for secondary cleaning (4,000 psi) I-38
33 Using water spray to keep the substrate surface in an SSD condition between placements I-39
34 Durability improves with lower water content and the use of entrained air in the concrete I-42
35 Thermal cracking in a thick concrete wall I-44
36 Corrosion of reinforcing steel from deicing salts used on the bridge I-45
37 Damage resulting from expansion at tight joints I-46
38 Joint detail for joints that experience excessive expansion that results in damage I-47
39 Large voids, rock pockets, and honeycombs resulting from inadequate concrete consolidation I-48
40 An example of inadequately consolidated concrete that needs repair I-49
41 The addition of water or other substances during finishing can lead to weakened and damaged concrete surfaces I-49
42 Surface damage appearing in new concrete caused by the addition of water during finishing I-50
43 Salt scaling that resulted when water containing deicing salts froze on poor quality concrete surfaces I-50
44 Repairs that were damaged by sulfate attack I-52
45 A cross section of backfill grout showing replacement of cement grout with thaumasite, a form of sulfate attack I-52
46 Evidence of ASR provided by gel-filled cracks and reaction rim around some aggregate particles I-54
47 Extensive cracking which can indicate ASR I-54
48 Examining concrete deterioration in a structure built in the 1970s I-56
49 Freeze-thaw deterioration in a spillway slab occurring below the exposed surface, due to moisture and temperature gradients I-57
50 The top of a spillway wall suffering damage from cycles of freezing and thawing weather I-57
51 Another example of freeze-thaw deterioration I-58
52 Example of D-cracking that resulted from freezing and thawing weather damage to absorptive aggregates I-59
53 Repairs that were not thick enough to prevent cycles of freezing and thawing weather from damaging the underlying concrete I-60

Figures

Figure *Page*

54 Top: Insulating panel and concrete debris on the pumping plant floor I-61
55 Abrasion-erosion damage to concrete I-62
56 Abrasion-erosion damage from flowing water with small abrasive particles showing a polished surface I-63
57 Placing silica fume concrete in a stilling basin in central Colorado to repair abrasion-erosion damage I-64
58 High-strength silica fume concrete materials were delivered in 3,000-pound sacks and mixed onsite with water and liquid admixtures I-64
59 Typical pattern for cavitation damage in a spillway tunnel I-65
60 Cavitation damage can be very extensive, as shown here, where the damage extended deep into foundation material I-66
61 The early stages of concrete erosion and possible cavitation I-67
62 High chlorides in water, leading to corrosion of reinforcing steel I-69
63 Examples of acid exposure on concrete I-71
64 There are many types of cracks that can affect concrete structures. I-73
65 Plastic settlement cracking I-74
66 Excessive drying shrinkage cracking due to loss of water from the concrete after hardening I-74
67 Plastic shrinkage cracking in concrete placed in hot, dry weather I-75
68 Foundation settlement in this water treatment plant caused cracking in one of the water bays I-76
69 A dial gauge used to monitor crack movement I-76
70 Photogrammetric techniques can be used to measure movement of cracks and joints by using data from digital photographs I-77
71 An example of improper crack repair, resulting in an unsightly appearance I-79
72 Improperly repairing cracks often makes the repair very short lived I-79
73 Reflective cracking from cracks below the concrete overlay I-80
74 Classification system for drying shrinkage values I-81
75 Structural damage from a collapsed roadway that impacted a pier of a siphon I-82
76 Core from concrete placed in the 1960s I-83
77 An example of multiple causes of damage. In this case, ASR, freeze-thaw, and conduits are too close to the surface of the concrete I-84
78 A low viscosity epoxy resin was poured into plastic shrinkage cracks I-90
79 Application of HMWM to the top of a concrete dam I-91
80 Application of an epoxy sealer to a pumping plant deck I-94

Figures

Figure *Page*

81 Steel shotblasting a concrete deck prior to application of an epoxy sealer I-95
82 Application of a siloxane sealing compound I-98
83 Cracked concrete canal lining repaired with an elastomeric polyurea I-100
84 Insufficiently thick repairs on a spillway wall made with concrete subject to freeze-thaw deterioration resulted in failure of the repair and additional damage to the surrounding concrete I-104
85 Portland cement mortar is suitable for repairing voids resulting from air and bleed water trapped under forms, as long as it is done in a timely manner I-105
86 Portland cement mortar repairs made to a shallow defect I-106
87 Using low-pressure spray equipment to apply Portland cement mortar I-107
88 Cutting a slight key into the hole to help hold the repair material in place I-109
89 Drying the surface of concrete using oil-free compressed air to meet the surface moisture requirements of the manufacturer I-114
90 Using heaters in an enclosed area to increase the temperature to meet application requirements I-115
91 Using a simple bucket mixer to mix epoxy resin I-117
92 Mixing epoxy mortar ingredients in buckets I-117
93 Placing polymer concrete to repair shallow damage to a stilling basin I-119
94 Using drywall mud application tools to apply epoxy mortar I-119
95 Consolidating polymer concrete with a vibrator I-120
96 Protecting the polymer concrete until it gets hard I-120
97 Applying heat to speed curing of a polymer concrete repair I-121
98 Placing concrete on an epoxy bonding resin I-123
99 Extensive cracking in a packaged thin repair mortar applied to a spillway crest I-125
100 Applying a stiff repair mortar using hand packing I-126
101 An outlet works repair being prepared for replacement concrete I-129
102 Form details for placing concrete in vertical repair holes I-129
103 The upstream face of Barker Dam was repaired with a combination of precast panels and preplaced aggregate concrete I-135
104 Using shotcrete to repair a spillway floor. Shotcrete was used here because of the remoteness of the site I-138

Figures

Figure *Page*

105 Even though space was limited, due to the complicated geometry of this outlet works, shotcrete was used to make concrete repairs I-139
106 Abrasion-erosion test results showing that the SFC mixture withstood abrasion erosion much better than conventional concrete I-142
107 Adding additional reinforcement to the exterior of a large-diameter siphon I-145
108 Installing carbon fiber reinforced polymer to repair a large concrete pipe I-146
109 High-volume water leaks can be repaired using polyurethane resins I-148
110 Ground hydrophilic rubber deposited in front of a leaking contraction joint I-149
111 Cleaning the surface of a crack using a small grinder prior to gluing on the port and sealing the face of the crack with epoxy resin I-150
112 Using compressed air to clean dust and debris from the crack opening I-150
113 Ports glued to the face of cracks prior to epoxy injection I-151
114 Sealing the crack opening for epoxy resin injection after attaching the injection ports I-151
115 Drilling an injection hole to intercept the leak several inches from the face for polyurethane resin injection I-152
116 Ports placed into holes for injecting polyurethane rein into a leaking expansion joint in a powerplant deck I-153
117 Placing resin soaked jute or open cell backer rod into large cracks or joints can help contain the polyurethane injection resin for large cracks and joints I-153
118 Two-component cartridge system for injecting resin into cracks I-156
119 A small pressure pot for injecting mixed epoxy resin into a crack I-156
120 A resin injection system specifically manufactured for injecting epoxy resins I-157
121 Hand-operated pump used to inject resin in difficult access areas I-158
122 Airless paint sprayers can be used for some injection applications I-158
123 A high-pressure resin injection pump capable of injecting two components and water I-159
124 Simultaneous injection of multiple injection ports for epoxy injection I-161

Figures

Figure *Page*

125 The exposed crack, after removing the injection port, is filled with cured epoxy I-161
126 There are a wide variety of ports available for resin injection, including hammer-in ports, mechanical ports, and twist-in wall spears I-162
127 Grouting is progressing from one end of the leaking expansion joint to the other I-163
128 A large packer for injecting resin through a drilled hole I-164

Appendix IA: Historical Development of Durable Concrete for the Bureau of Reclamation IA-1

Appendix IB: Petrographic Analysis for Concrete IB-1

Part II: Standard Specifications for Repair of Concrete, M-47

The Seven Steps of Concrete Repair and Maintenance II-2
1. Determine the cause(s) of damage II-3
2. Evaluate the extent of damage II-3
3. Evaluate the need to repair II-4
4. Select the repair method and material II-4
5. Prepare the existing concrete for repair II-4
6. Apply the repair method II-5
7. Cure the repair properly II-5

Appendix IIA: Guide Specifications IIA-1

Guide to Concrete Repair

Part I: Reclamation's Methodology for Concrete Maintenance and Repair

A. Repair and Maintenance of Concrete

1. Introduction

For decades, the Bureau of Reclamation (Reclamation) has published both the *Concrete Manual* and the *Standard Specifications for Repair of Concrete, M-47*.[1] The subsequent revisions of these two documents (Bureau of Reclamation, 1975 and 1996), particularly chapter 7 of the *Concrete Manual*, have formed the basis for much of the concrete repair performed on Reclamation projects. The first edition of Reclamation's *Guide to Concrete Repair* (Smoak, 1996) presented a revised and updated M-47 and a narrative about the process that Reclamation recommends for obtaining successful repairs to concrete.

This second edition of the *Guide for Concrete Repair* updates and revises the original Guide and M-47 to include much of the information gathered over the last 20 years through field work, international workshops, and collaborative research projects. The Guide is now in two parts: Part I consists of chapters A. through E., with appendices. Part II contains the M-47, which is updated with new information and formatted to follow current Reclamation specification standards.

Reclamation operates and maintains hydroelectric and water resources structures in the Western United States. It serves as the fifth largest electric utility in the 17 Western States and the Nation's largest wholesale water supplier, administering 348 reservoirs with a total storage capacity of 245 million acre-feet (1 acre-foot, or 325,851 gallons of water, supplies enough water for a family of four for 1 year). Reclamation provides 1 out of 5 Western farmers (140,000) with irrigation water for 10 million farmland acres that produce 60 percent of the Nation's vegetables and 25 percent of its fruits and nuts. In addition, Reclamation operates 58 hydroelectric powerplants averaging 42 billion kilowatt-hours annually. Reclamation also delivers 10 trillion gallons of water to more than 31 million people each year, and it manages in partnership 308 recreation sites visited by 90 million people per year.

Concrete repair industry experts estimate that $18 billion to $21 billion (Vision 2020, 2006) (Emmons and Sordyl, 2006) are spent every year for concrete

[1] The first edition of the *Concrete Manual* was published in July 1938, and the first edition of the *Standard Specifications for Repair of Concrete, M-47* was printed in November 1970.

repairs in the U.S. alone. However, at least $1.2 billion (Vision 2020, 2006) of the approximately $20 billion total represent the estimated cost for annual repairs to water storage, hydroelectric, and management facilities and related structures.

Clearly, there is a need for sound concrete repair and maintenance practices. The first edition of the Guide stated: "It has become apparent that there is need for modernization and expansion of the information on the methods, materials, and procedures of concrete repair originally found in chapter 7 of the *Concrete Manual* (Bureau of Reclamation, 1975)." That still holds true, and the process of updating continues with this edition. Much of the information in the original Guide is still relevant. There are some significant changes in other areas. These changes are the result of several collaborative workshops and research efforts by Reclamation and others (NIST, 1995, 1999), (Naval Facilities Engineering Service Center, 2001), (Bureau of Reclamation, 2003), (Morency et al., 2005), (von Fay et al., 2009), (Bissonnette et al., 2012), as well as knowledge gained from project and field work.

Part I of this Guide discusses Reclamation's methodology for concrete maintenance and repair and is designed to serve as a supplement for the "Standard Specifications for Repair of Concrete, M-47," in Part II. Part I addresses the more common causes of damage to Reclamation concrete, including recommendations for the types of repair methods and materials most likely to be successful in repairing concrete damage resulting from those causes. Finally, the Guide contains a detailed description of the uses, limitations, materials, and procedures of each of the standard repair methods/materials included in the "Standard Specifications for Repair of Concrete, M-47."

a. Concrete Repair and Maintenance System

Concrete repairs have occurred on Reclamation projects since the first concrete was placed in 1903. Unfortunately, even though the best available knowledge and materials were used, many repair failures have occurred during the 112 years since that first concrete was placed. As a first step to increase the likelihood of a successful repair, it is paramount to use a consistent, systematic approach to concrete repair.

Reclamation's concrete repair and maintenance system consists of seven basic steps:

1. Determine the cause(s) of damage
2. Evaluate the extent of damage
3. Evaluate the need to repair
4. Select the repair method and material
5. Prepare the existing concrete for repair

6. Apply the repair method
7. Cure the repair properly

There are several similar repair approaches or systems currently in use. The U.S. Army Corps of Engineers (USACE) lists an excellent system in the first chapter of its manual, *Evaluation and Repair of Concrete Structures* (U.S. Army Corps of Engineers, 1995). Other organizations, such as the American Concrete Institute (ACI), the Portland Cement Association, the International Concrete Repair Institute, and private authors (Emmons, 1994) have also published excellent methodologies for concrete repair.

The above seven-step repair system has been developed, used, and evaluated by Reclamation over an extended period of time. This process is appropriate for repairing construction defects in newly placed concrete, as well as old concrete that has suffered damage. The repair system is designed to be followed in sequential order. Reclamation has found that, all too often, the first issues discussed are how to fix a problem (what material to use) and how much it will cost. Although these questions are relevant, for an effective repair, it is more useful to know the cause and extent of damage before selecting a repair method and material.

When questions are asked in the right order, the necessary information can be obtained to design an effective repair. Of course, the information gathered must be viewed as part of a system of the existing structure, the deterioration or damage affecting the structure, and its service environment (Vaysburd et al., 2014) for the repairs to be as durable and long lasting as possible. Whether a concrete maintenance or repair activity is being pursued, following the steps outlined above will result in a better, more cost effective outcome.

2. Maintenance of Concrete

Many times, concrete is viewed as a maintenance-free material. Modern concrete is a very durable construction material. If properly proportioned and placed, concrete will have a very long service life, usually without the need for any maintenance, at least for some time.

Unfortunately, there are times when concrete does need maintenance to extend or prolong its service life. Many Reclamation concrete structures were constructed using early concrete technology, and they have already provided well over 50 years of service under harsh conditions. Concrete in these circumstances should be inspected regularly to ensure that it is receiving the maintenance necessary to retain serviceability.

In addition, new technology concrete can be placed in extremely aggressive environments. The life of that concrete can be extended by establishing and following a well planned maintenance program.

Performing an effective maintenance program to prolong the life of a concrete structure is usually much more economical than taking no action. Failure to promptly provide the proper maintenance will usually result in expensive repairs or replacement. Figures 1 and 2 demonstrate the consequences of inadequate or inappropriate maintenance. These two structures now require replacement at a cost many times greater than the preventive maintenance that could have extended their serviceability.

Figure 1. Freeze-thaw damage that could have been prevented by proper maintenance.

During development of a maintenance program, or before specific maintenance activities are performed, it is good practice to review the seven steps, which are explained in Chapter B, “Using Reclamation's Concrete Repair and Maintenance System.” The approach presented there will help ensure that the maintenance plan and activities are well conceived and executed.

A good maintenance program will involve regularly scheduled inspections. Suspect areas should be monitored. Photographs and notes should be collected and stored to establish a record that can be reviewed at a later date. Photogrammetric or other methods to generate three-dimensional (3D) point clouds of the condition of concrete structures can provide valuable information (Klein, 2014). The information can be used to relatively easily quantify the progression of damage, changes in cracking, or movement of slabs and walls, for example.

Figure 2. Removing the source of water properly would have resulted in significantly less damage.

Many of Reclamation's maintenance activities are focused on keeping aggressive compounds out or off of concrete. They are designed to limit the intrusion of water into concrete, especially for older or poorer quality concrete that is not air-entrained. Chlorides, carbon dioxide, sulfates, and other contaminants can damage concrete, depending on concrete quality and service exposure.

Reclamation experience has shown that there are certain portions of exposed concrete structures that are more vulnerable than others to deterioration from freezing climates. These include exposed surfaces of the top of walls, piers, posts, handrails, and parapets; all of curbs, sills, ledges, copings, cornices, and corners; and surfaces in contact with spray or water at frequently changing levels during freezing weather. The durability of these surfaces can be considerably improved, and serviceability can be greatly prolonged by protective maintenance such as weatherproofing treatment with concrete sealing compounds (see section D.1).

Before the availability of more modern materials, linseed oil-turpentine-paint preparations were widely used by Reclamation to retard concrete deterioration caused by weathering. These preparations, when applied correctly, were

effective. Modern concrete sealing compounds are much simpler to apply and provide superior protection of the concrete. The use of the linseed oil system is no longer recommended.

Penetrating sealers, including silanes, siloxanes, and blended products, are a cost-effective means of protecting new and existing surfaces. When applied properly, penetrating sealers can serve as chloride screens and dampproofing to improve durability against destructive corrosion of embedded reinforcement and damage from freezing and thawing weather. Exposed concrete building exteriors, parking structures, and bridge decks are typical applications. Sealers can be applied at the time of original construction, as part of a maintenance program, and as protection for repairs.

High molecular weight methacrylate (HMWM) and suitable low viscosity epoxies are Reclamation's choice for sealing concrete that has small cracks on its surface (von Fay and Pepin, 2013). Low viscosities are needed for these products to be effective, and viscosities should be below 200 centipoise (cps). Suitable epoxies are available that have viscosities below 100 cps, and many HMWMs have viscosities below 50 cps. Epoxies will tend to work better than HMWMs in damp cracks, but the mixture proportions must be closely followed. HWMWs can be mixed at somewhat different ratios, which can be used to adjust set time. These materials are very effective in “gluing” the small cracks together and keeping water out of the concrete.

Selecting the most satisfactory protective treatment depends, to a considerable extent, on correctly assessing the exposure conditions. Concrete sealing compounds and coatings that provide good protection from weathering in an essentially dry environment may perform poorly when exposed to wet conditions, such as on some bridge curbs and railings, stilling basin walls, and piers. Freezing and thawing tests of concrete specimens protected by a variety of concrete sealing compounds and coatings have been performed in Reclamation laboratories and include linseed oil, fluosilicates, epoxy and latex paints, chlorinated rubber, and waterproofing and penetrating sealers. These tests indicate that proprietary epoxy formulations, siloxane and silane formulations, and HMWM formulations clearly excel in resisting deterioration caused by repeated freezing and thawing in the presence of water. None of these formulations, however, will totally "waterproof" concrete (i.e., they will not prevent treated concrete from absorbing water and becoming saturated under conditions of complete or long-term submergence).

For typical Reclamation exposure conditions, concrete sealing compounds are usually not applied on new concrete construction. The treatments are most commonly used on older surfaces when the earliest visible evidence of weathering appears. The treatment is best used before deterioration advances to a stage where it cannot be effectively slowed or halted. Such early evidence consists primarily of fine surface cracking that is close and parallel to edges and corners of

concrete structures. The need for protection may also be indicated by pattern cracking, surface scaling or spalling, and shrinkage cracking. By treating vulnerable surfaces in the early stages of deterioration, later repairs may be avoided or at least postponed.

Other maintenance actions can include making changes to the operation of the facility to protect the concrete. For concrete that is subject to damage from freezing and thawing weather, reducing the number of cycles of freezing and thawing while the concrete is critically saturated can extend its service life. This can be done by insulating the concrete or by changing operating procedures to keep critical areas under water (that does not freeze) in cold weather, or by varying the depth of water over the years to avoid concentrating the damage at one elevation. For example, the concrete damage shown in figure 3 could have been reduced if the water level was varied during cycles of freezing and thawing weather.

Figure 3. Freeze-thaw damage that could have been reduced by changing operation of the structure.

Concrete in contact with high velocity flowing water has special needs. Small offsets at joints, or cracks or small holes in the concrete surface, can result in cavitation damage to concrete. The hole or offset causes the flowing water to separate from the concrete surface. This separation causes vapor bubbles to form in the flowing water. When these bubbles collapse downstream, they exert forces that destroy concrete and most other rigid materials including high strength stainless steel.

Proper concrete maintenance in high velocity waterflow structures includes eliminating offsets and holes, and repairing observed cavitation damage before it can enlarge to cause more damage. No material will stand up to cavitation indefinitely; therefore, the long-term solution is to manage the flow to avoid conditions that will cause cavitation.

Another form of damage resulting from flowing water is abrasion erosion. Flowing water, even at velocities too low for cavitation damage, can wear away or even destroy concrete structures by the impact and grinding action of silt, sand, and rock carried in the water.

Proper maintenance means reducing the amount of debris in flowing water. Screens or settling areas at inlet structures can help. Retaining walls to protect flowing water from rock slides, and fences to keep people from throwing rocks into the water, are sometimes needed. In some stilling basins, rock and other debris are not swept out. A ball mill action is established with small to large aggregate and boulders beating on the concrete. Removing these materials from stilling basins should be a part of routine maintenance. A longer-term solution would be to change the stilling basin's characteristics to prevent drawing materials into or trapping them in the basin.

3. General Requirements for Quality Repair

The term "concrete repair" refers to any replacing, restoring, or renewing of concrete or concrete surfaces after initial placement. It can, in fact, be a part of some maintenance activities.

Historically, the repair of concrete has been based at least as much on art as it has on science. Specific training related to concrete repair was limited or nonexistent, with most knowledge gained from years of experience, which can be a very expensive process. Many people in the concrete repair industry are working to change that by working to improve practices, knowledge, and training related to concrete repair (Vision 2020, 2006).

While this document provides methods to greatly improve the success rate of concrete repairs, there are many times when repairs still fail prematurely. The failure rate for concrete repairs remains unacceptably high (Goodwin, 2008); therefore, before repairs are commenced, the method and materials proposed for use should be approved by someone knowledgeable and trained in the field of concrete repairs. Understanding all the issues related to material compatibility for the substrate concrete, exposure conditions, and service, as well as how they interact for the repaired structure is very important for achieving successful repairs (Vaysburd et al., 2014) (Vaysburd et al., 2015)

There has been a relative explosion of packaged cementitious repair materials as the size of the repair industry grows. Choosing which of these products to use can be a daunting task because very often the information needed to make such a decision is not readily available. Material suppliers do not always supply all the desired information, and the information can be generated differently among different manufacturers, making it impossible to compare products. For this reason, it is very important to select materials that have been tested according to either the ACI or International Concrete Repair Institute (ICRI) data sheet protocol (ACI 364.3R, 2009) (ICRI 320.3R, 2012).

The need for repairs can vary from minor imperfections, such as she bolt holes, snap tie holes, or normal weathering, to major damage resulting from chemical or physical deterioration, water energy, or structural failure. Although the procedures described for repairs may initially appear to be unnecessarily detailed, experience has shown that no step in a repair operation can be omitted or carelessly performed without detriment to the serviceability of the entire repair. Inadequate workmanship, procedures, or materials will result in inferior repairs, which will likely fail prematurely.

a. Workmanship

Workmanship and skill of the craftsperson are of paramount importance for a successful concrete repair project, especially because most repair procedures involve predominantly manual operations. Repair personnel are responsible for making repairs that are durable, ideally crack-free, and, when appropriate, well bonded to existing surfaces. It is particularly important that key personnel be fully instructed concerning procedural details of repairing concrete and the reasons for the procedures. Some products may require that personnel are certified by the material manufacturer prior to a material's use. Craftspeople should also be informed of the more critical aspects of repairing concrete. Proper inspection must be performed to ensure compliance with standards of workmanship.

b. Procedures

Serviceable concrete repairs result only if proper methods are chosen and techniques are carefully performed. Wrong or ineffective repair or construction procedures, coupled with poor workmanship, lead to poor quality repairs. Many proven procedures for making high quality repairs are detailed in this Guide; however, not all procedures used in repair or maintenance are discussed. Therefore, it is incumbent upon the personnel doing the work to use procedures

that have been successful, that have a proven high reliability factor, or that are well formulated and planned if no established methods exist.

Whenever possible, repairs made on new or old concrete should be made as soon as possible after the need for repair is realized. Especially for new concrete work, repairs that will develop the best bond and are most likely to be durable and permanent are repairs that are made immediately after stripping forms, while the concrete is still green. For this reason, repairs to newly constructed concrete should be completed within 24 hours after the forms have been removed and no more than 72 hours after the concrete is placed. For this type of repair, curing should be interrupted only in the area of repair operations and restarted as soon as possible.

Long lasting repair of deteriorated or damaged portions of concrete structures cannot be ensured unless there is complete removal of all deteriorated and affected concrete (Bissonnette et al., 2012), proper preparation of the remaining concrete (Morency et al., 2007), careful replacement in strict accordance with a standard or approved procedure, and the anchorage is secure. Consequently, work of this type should not be undertaken unless or until ample time, personnel, and facilities are available. Only as much of this work should be undertaken as can be completed correctly; otherwise, the work should be postponed, but not so long as to allow further deterioration. When the need for repairs is recognized, repairs should always be made at the earliest possible date.

Joints that are in damaged concrete should be maintained in the repair (figure 4). For partial depth repairs or overlays, cracks in the substrate concrete may reflect through the repair material. Almost always, joints also need to be preserved for a partial depth repair or overlay. If the repair material bonds on both sides of a joint, the repair material will crack.

c. Materials

Materials to be used in concrete repair must be of high quality, within their shelf life, and capable of meeting specifications requirements for the particular application or intended use. Mill reports or testing laboratory reports should be required of the supplier or manufacturer as an indication of quality and suitability. As an alternative, certifications should be required from the supplier to verify that the materials meet certain specification requirements.

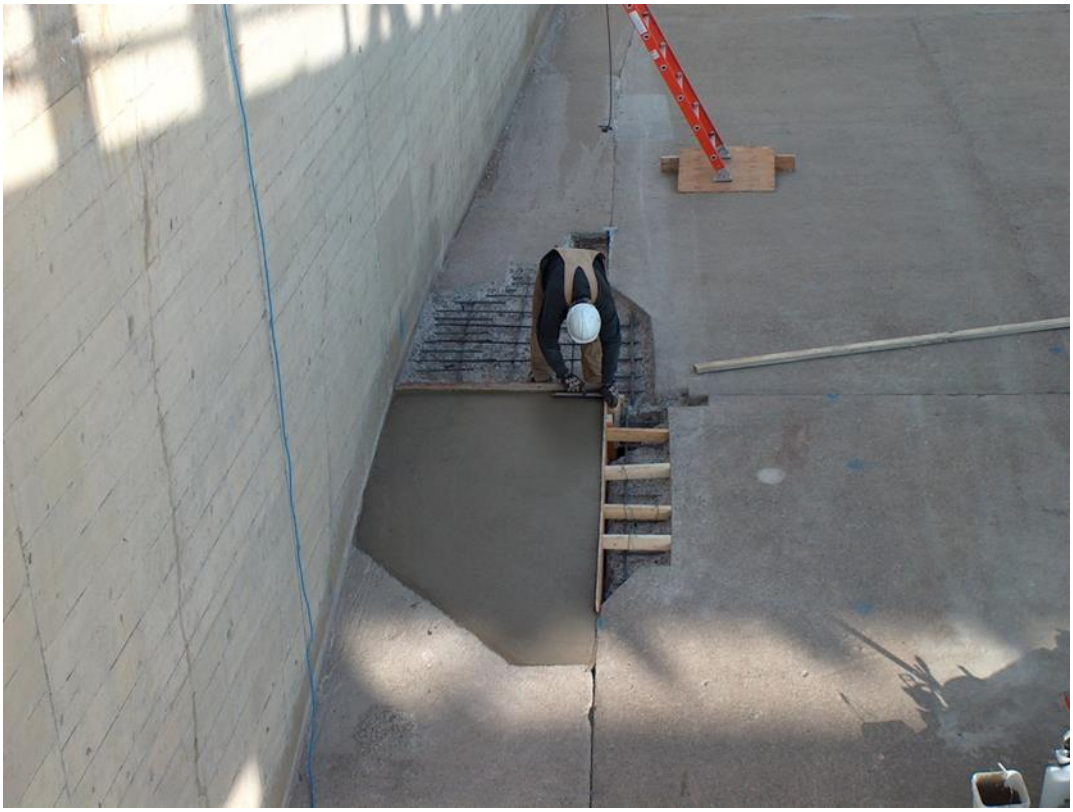

Figure 4. Formwork used to maintain the existing joints in a spillway floor repair.

The use of standardized methods and materials described in this Guide should always be the first choice when planning repairs. Due to the high cost associated with subsequent removal and replacement of new or unproven materials, if they prove unsuitable for the job, they should not be used in concrete repair unless both of these criteria are met:

- The standard repair materials and methods have been determined unsuitable
- The owners and all other parties to the repair have been informed of the need to use nonstandard materials and the associated risk

There are numerous packaged, proprietary, thin repair products available for use for thin repairs. The data sheets for these products should be reviewed before selection. Many of them boast rapid strength gain; but for most Reclamation repair situations, rapid strength gain is not important. In most cases, rapid strength gain is not needed and can, in many cases, result in a less durable repair. When comparing different products, they should be evaluated using ICRI 320.3, “Guideline for Inorganic Repair Material Data Sheet Protocol” (ICRI 320.3R, 2012) or ACI 364.3R-09, “Guide for Cementitious Repair Material Data Sheet” (ACI 364.3R, 2009). That way, users can be reasonably certain that products from different manufacturers are tested similarly.

Packaged and proprietary materials selected for repair application must be used in accordance with manufacturers' recommendations or other approved methods. Many times, the properties of these materials can be significantly impacted by small changes in mixing procedures and ingredients. Mixing, proportioning, and handling must be in accordance with the highest standards of workmanship.

In addition, there are many products and technologies available to mitigate for the corrosion of reinforcing steel in concrete when the concrete is repaired. Products that are being considered for use to help control steel corrosion should be evaluated based on data generated using M-82, “Standard Protocol to Evaluate the Performance of Corrosion Mitigation Technologies in Concrete Repairs” (Bureau of Reclamation, 2014).

B. Using Reclamation's Concrete Maintenance and Repair System

As mentioned in chapter A, Reclamation developed the following seven-step process to help improve concrete repair practices and to ensure that repairs are conducted in a logical sequence:

1. Determine the cause(s) of damage
2. Evaluate the extent of damage
3. Evaluate the need to repair
4. Select the repair method and material
5. Prepare the existing concrete for repair
6. Apply the repair method
7. Cure the repair properly

The first three steps of the system comprise the functions necessary to perform a condition survey of the concrete structure and the guidelines here provide information for that process. Also, more information can be found in (ACI 201, 2008) (ACI 364.1, 2007). Once a condition survey is completed, a suitable repair material can be selected.

Generally, obtaining concrete cores will provide valuable information that will significantly add to the findings from the condition survey process. While the costs may seem high for obtaining and examining concrete cores, the results are almost always well worth the cost.

1. Determine the Cause(s) of Damage

The first and very important step of repairing damaged or deteriorated concrete is to correctly determine the cause of damage. Knowing what caused the damage, and reducing or eliminating that cause, will make the repair last longer. If no attempt is made to eliminate the original cause of damage, the repair may fail as the original concrete did, resulting in wasted effort and money. Freezing and thawing weather, structural overload, cavitation, abrasion-erosion, sulfate bearing waters or soils, acids, alkali-aggregate reaction, carbonation, and corrosion of

reinforcing steel are some examples of causes of damage to concrete. Design and construction defects can result in concrete damage. Foundation movement, poor quality concrete, poor finishing, and poor curing can lead to concrete that suffers damage.

All construction materials deteriorate eventually. Good design, construction, and maintenance will lengthen service life. Good concrete in the right environment can last hundreds or thousands of years. Some Roman concrete structures, including the Pantheon and some aqueducts, are still functional after 2,000 years.

Since many Reclamation structure are quite old, having a historical perspective can help determine possible causes of damage. Refer to appendix IA for information about the development of durable concretes at Reclamation.

If the original damage is the result of a one- time event, such as a flood that caused a roadway retaining wall to collapse on a siphon pier (structural overload), remediation of the cause of damage does not need to be addressed. It is unlikely that such an event will occur again. If, however, the cause of damage is continuing or recurring, remediation must be addressed. For example, the repair method and materials must, in some manner, be resistant to predictable future damage. The more common causes of damage to Reclamation concrete are discussed in chapter C. A quick review of these common causes of damage reveals that the majority of them are of a continuing or recurring nature.

It is important to differentiate between causes of damage and symptoms of damage. In the above case of the retaining wall hitting the siphon pier, the cause of damage is the impact to the concrete. The resultant cracking is a symptom of that impact. In the event of deterioration to modern concrete, the cause of damage may well lie with the use of low quality or dirty aggregates in the concrete mix or an improperly batched load of concrete (figure 5). The resultant damage is a symptom of low durability concrete. The application of high cost repairs to low quality concrete may be necessary, but the life of the repairs will likely be shorter than desired.

With Reclamation’s older concrete structures, it is common to find multiple causes of damage (see section C.13). Older design standards, low quality materials, and poor construction practices reduced the durability of concrete and increased its susceptibility to deterioration (appendix IA). Similarly, sulfate or alkali-silica deterioration cause cracks in the exterior surfaces of concrete. Those cracks can allow accelerated deterioration from cycles of freezing and thawing weather, or the reverse can occur (freeze-thaw deterioration can occur, allowing alkali-silica reaction or sulfate attack).

Figure 5. Poor quality aggregate used in concrete placed in the late 1960s led to the need for expensive repairs in the 2000s.

Unfortunately, it is often difficult or impossible to confirm a cause of damage by visual examination alone. Evaluating several samples of concrete by obtaining concrete cores provides very valuable information (figure 6). The information is very important to support any decisions to make or to postpone repairs. The concrete cores can be tested for physical properties. In addition, a petrographic exam of representative concrete cores helps to determine the cause and extent of damage. Refer to Appendix IB, "Petrographic Analysis for Concrete," and section B.2. for more information about the uses of petrographic exams of concrete.

Figure 6. Obtaining concrete samples is very important to properly assess the cause and extent of damage. In this case, the concrete apron was a few inches below the water surface.

Finally, it is important to fully understand the original design intent of a damaged structure before attempting repair. A classic example of misunderstanding the intent of design occurred several years ago on a project in Nebraska. A concrete sluiceway that would experience great quantities of waterborne abrasive sand was designed with an abrasion-resistant protective overlay of silica fume concrete. This overlay was intentionally designed so that it would be easy to replace when required by the anticipated abrasion-erosion damage, so bond to the parent concrete was not required, nor was any reinforcing steel specified. This design concept, however, was not communicated to construction personnel. They became deeply concerned when the silica fume overlay was observed to have cracks in it and was found to be “disbonded" shortly after placement and curing was completed. Some difficulty was experienced in preventing field personnel from requiring the construction contractor to repair a perfectly serviceable overlay that was performing exactly as intended.

2. Evaluate the Extent of Damage

The next step of the repair process is to evaluate the extent and severity of damage. The intent of this step is to determine how much concrete has been damaged, and how this damage will affect serviceability of the structure (how long, how wide, how deep, and how much of the structure is involved). This activity can include predicting how quickly the damage may increase and how the damage may progress.

Damage resulting from cyclic freeze-thaw, sulfate exposure, and alkali-aggregate reaction can appear to be similar. The damage caused by alkali-aggregate reaction and sulfates can be far more severe than damage caused by freeze-thaw, although all three of these causes can result in destruction of the concrete and loss of the affected structure. The main difference in severity is based on the fact that freezing and thawing is limited to portions of the concrete that are at least 90-percent saturated and then freeze, so the damage tends to manifest itself on outdoor surfaces. When alkali-aggregate reaction and sulfate attack occur, much more of the structure can be affected.

One of the easiest and most common techniques used to quickly estimate the extent of damage is sounding the damaged and surrounding undamaged concrete with a hammer or other large metal object to listen for a hollow or drummy sound (figure 7). If performed by experienced personnel, this simple technique can provide needed information on the extent of damage in many instances. In sounding suspected delaminated or disbonded concrete, it should be remembered that deep delaminations, or delaminations that contain only minute separation, will not always sound drummy or hollow. An indication of the relative strength of concrete can also be determined by hammer blows. Good quality concrete develops a distinct ring from a hammer blow, and the hammer rebounds smartly. Low quality concrete resounds with a dull thud and little rebound of the hammer.

There are a number of nondestructive testing (NDT) methods that can be used to evaluate the extent of damage (Giannini et al., 2012) (ICRI 210.4, 2009). The Schmidt Rebound Hammer is perhaps the cheapest and simplest tool to use. Rebound hammer data provides relative quality information, which might be useful when comparing similar concretes in different areas of a structure. However, rebound data, particularly on older concrete, should not be relied on too heavily to provide meaningful information. It is usually more effective for newer concrete structures that have not experienced much weathering or deterioration.

Figure 7. Inspecting a spillway floor using steel bars to sound the concrete. The soundings indicated delaminations in the spillway floor.

Ultrasonic pulse velocity and acoustic pulse echo devices measure the time required for a sound wave to either travel through a concrete section or to travel to the far side of a concrete section and rebound. Damaged or low quality concrete deflects or attenuates such sound waves and can be detected by comparison of the resulting travel time with that of sound concrete. Acoustic emission devices detect the elastic waves that are generated when materials are stressed or strained beyond their elastic limits. With such devices, it is possible to "hear" the impulses from development of microcracks in overly stressed concrete. One of the main advantages of this type of technology is the ability to evaluate large areas of concrete relatively quickly.

However, the technology is not suitable for making stand-alone conclusions. Results from these technologies need to be correlated to actual core strength test results (ACI 228.1R, 2003). Without confirmation from coring, results can be

misleading. For a complete description of the uses of various NDT methods used for evaluating concrete, refer to (ACI 228.2R, 2013).

Cores taken from the damaged areas can be used to detect subsurface deterioration, to determine strength properties through laboratory testing, and to perform petrographic exams. Petrographic examination of concrete (appendix IB) obtained by coring is also the best method for determining the specific causes of deterioration. It is also very effective for finding microcracks in the concrete, which can indicate areas where deterioration has occurred or is starting to occur, but cannot be detected by sounding or other methods.

The areas of deteriorated or damaged concrete discovered by these methods should be mapped or marked on drawings of the affected structure. This will provide information for subsequent calculations of the area and volume of concrete to be repaired, as well as for preparation of repair specifications. Even though care is taken in these investigations, it is common during preparation of the concrete for repair to find that the actual area and volume of deteriorated concrete exceeds the original estimate.

For example, sometimes removal of existing constraining damaged concrete allows previously undetected damaged concrete to strain and crack. For this reason, it is usually a good idea to increase the computed quantity estimates by 15 to 25 percent to cover overruns (figure 8).

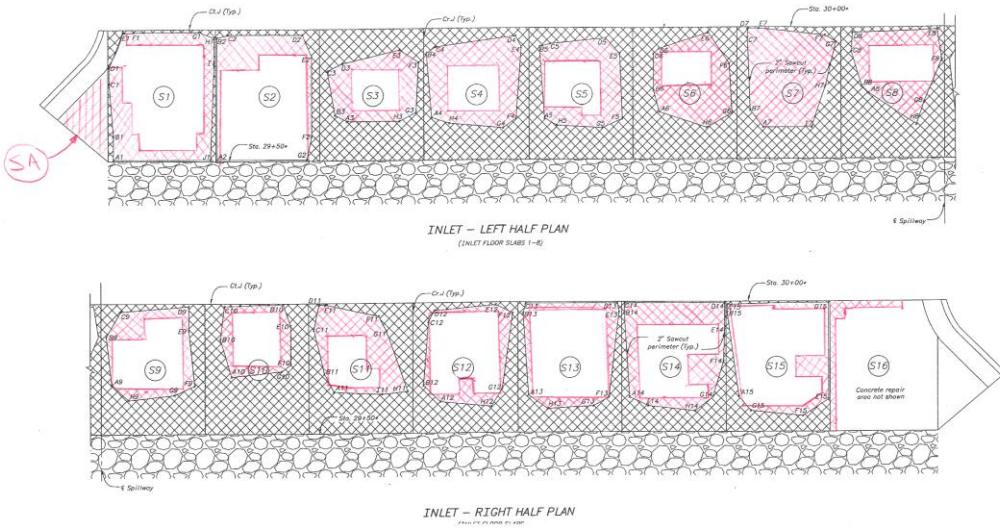

Figure 8. A drawing showing the original estimated limits of removal (black cross hatch) and the actual limits of removal (black and red cross hatch).

3. Evaluate the Need to Repair

Not all damaged concrete requires immediate repair. Many factors need to be considered before the decision to perform repairs can be made. Obviously, repair is required if the damage affects safety or safe operation of the structure (von Fay et al., 2004). Similarly, repairs should be performed if the deterioration has reached a state, or is progressing at a rate, such that future serviceability of the structure will be reduced. Most concrete damage, however, progresses slowly, and several options are usually available if the deterioration is detected early. With early detection, it may be possible to arrest the rate of deterioration using maintenance procedures. Even if repair is required, early detection of damage will allow orderly budgeting of funds to pay the costs of repair.

Some types of concrete deterioration can simply be ignored. Thermal cracking or cracking due to drying shrinkage and freeze-thaw deterioration is common on the downstream face of many older Western dams. These types of damage are unsightly, but repair can seldom be justified for only cosmetic purposes. Conversely, structural cracks due to foundation settlement and freeze-thaw deterioration to the walls or floor of a spillway will usually require repair, if not immediately, at some point in the future. Figure 9 shows freeze-thaw damage to the face of a dam that does not require repair for safe operation of the structure. Figure 10 shows similar damage that should have been repaired long ago.

Figure 9. A structure experiencing freeze-thaw deterioration that will not need repair for many years.

Figure 10. Freeze-thaw damage that should have been repaired before damage became so extensive.

Damage caused by absorptive aggregate popouts can be common on some concrete surfaces (figure 11). As long as the damage is only surficial and the concrete is not exposed to high velocity waterflows, where the offsets caused by popouts can result in cavitation damage, repairs are probably not necessary. Absorptive aggregates can, in some cases, lead to extensive damage of concrete structures when the aggregates stay wet and undergo repeated cycles of freezing and thawing weather. Figure 12 shows damage from absorptive aggregates that extends deep into the structure, requiring extensive repairs. Several structures in Kansas and Nebraska have been affected by this form of deterioration.

Figure 11. Damage from absorptive aggregates.

Figure 12. Damage from absorptive aggregates deteriorating from freezing and thawing weather that extends several inches into the concrete.

Figure 13 shows damage to a spillway that appears quite serious, and repair seems to be required. This spillway, however, is constructed with a very thick slab and does not experience high velocity waterflow. The repairs can be scheduled at some future date to allow an orderly process of budgeting to obtain the required funding. It should be noted, however, that proper maintenance might have eliminated the need to repair this spillway.

Figure 13. Damage that appears serious, but because of the characteristics of the spillway, repairs are not needed immediately.

Figure 14 shows a spillway that appeared to be in overall good condition; however, a void at the top of the spillway wall could not be kept full (it was initially assumed to be an animal burrow). After the void was filled, the fill material would subside. Closer examination revealed that spillway foundation material had been removed from a very large area beneath the spillway floor slab and that immediate repair was needed. Without repair, this spillway may have experienced extensive additional damage if operated during periods of high flows.

Figure 14. A spillway that appeared to be in good shape. Subsequent investigations discovered large voids under large sections of the spillway.

Selecting or scheduling the most optimum time to perform needed concrete repair should be part of the process of determining the need to repair. Except in emergencies, many irrigation structures cannot be removed from service during times of water delivery. The expense or loss of income involved with taking a structure out of service to perform repairs may exceed the costs of the repairs by many times.

In many cases, the cost of access to the areas needing repair (for example, dewatering costs) can be quite high. In these cases, timing the outages and adjusting the scope of the repair work may make sense. For example, if the cost of dewatering a stilling basin is higher than repair costs, it can make sense to expand the scope of the repairs to include more of the structure and to use more expensive repair materials that will last longer.

As noted earlier, these first three steps of the seven-step process (determining the cause of damage, evaluating the extent of damage, and evaluating the need to repair) form the basis of what is known as a "condition survey." If the damage is not extensive, or if only a small part of a structure is involved, the condition survey could be simply a mental exercise. If major repair or rehabilitation is required, a detailed condition survey should be performed and documented. Such a survey can consist of a review of the plans, specifications, and operating parameters for the structure; determination of concrete properties; and any additional field surveys, engineering studies, or structural analysis required to fully evaluate the present and desired conditions of the structure. The final feature of a condition survey, completed only after the above items have been completed, is a list of the recommended repair methods and materials.

A recent repair program demonstrated the importance of conducting a condition survey. There was abrasion erosion damage to a spillway for a small water diversion structure in southern Colorado (figure 15). Obtaining cores to verify the cause of the abrasion erosion damage (i.e., was the damage from abrasive materials or some form of deterioration resulting in poor quality concrete that abraded easily) was recommended. However, to save money, the decision was made to forego obtaining cores and evaluating the concrete. A repair specification was developed using hydrodemolition to remove damaged concrete. It soon became apparent that the damage was much more widespread and serious than originally thought (figure 16). Concrete was easily removed to significant depth over most of the spillway. Because the end of the construction season was fast approaching, and there was insufficient budget or design detail for a large repair, the decision was made to cap the structure with shotcrete to protect the remaining concrete over the winter and spring. A thorough investigation was conducted the next spring and summer by obtaining and examining cores from several areas (figure 17). The underlying cause of damage was determined to be from alkali-silica reaction, and a majority of the structure is affected by this. With this new information, proper designs can be developed and budgets prepared before beginning repairs.

Figure 15. Abrasion erosion damage to the flip bucket and energy dissipaters. The underlying cause of the damage was not determined prior to starting repairs.

Figure 16. After beginning concrete removal, the extent of damage was much worse than originally believed. Concrete was easily removed due to extensive deterioration.

There is a tendency to start thinking about repair material options early in the repair process. Repair professionals should try to avoid this. Without enough information, making proper, economical, and successful decisions is almost impossible.

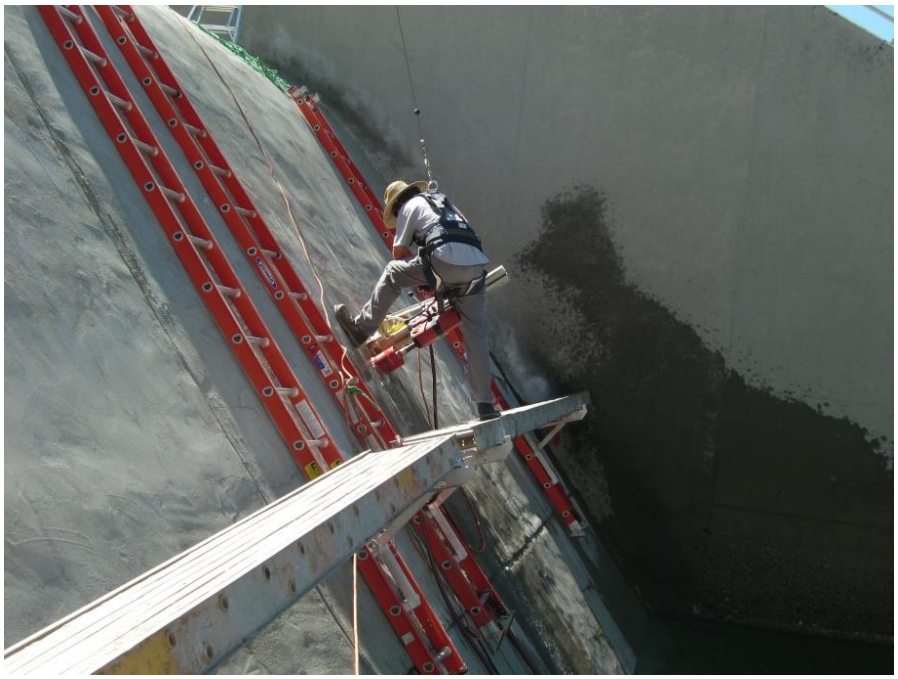

Figure 17. Coring through the temporary shotcrete repairs to obtain samples of concrete for testing and examination.

4. Select the Repair Method and Material

Once the first three steps of the repair process have been completed, the selection of proper repair methods and materials usually becomes more straightforward. These steps define the types of conditions the repair must resist, the available repair construction timeframe, and when repairs must be accomplished. This information, in combination with data on the volume and area of concrete to be repaired, will usually determine which of the standard repair materials should be used. Also, this information will determine when the standard repair materials cannot be expected to perform well and when nonstandard materials should be considered (see chapter E). Chapter D contains a detailed discussion of each of the standard repair materials. In addition, when selecting the repair method and material, it is important to consider compatibility issues (Vaysburd et al., 2014). Selecting a repair material and method that may lead to subsequent damage or accelerate damage to the existing concrete or reinforcing steel must be avoided.

In addition to the information presented here, ICRI 320.2R, "Guide for Selecting and Specifying Materials for Repair of Concrete Surfaces" (ICRI 320.2R, 2009), and ACI 546.3R, "Guide for the Selection of Materials for the Repair of Concrete" (ACI 543.3R, 2006), offer guidance for the selection of repair materials.

5. Prepare the Existing Concrete for Repair

Preparing the existing concrete for repair is very important for accomplishing durable repairs. This step involves removing all the deteriorated and damaged concrete and leaving a sound surface for the repair material to bond to. If this step is not done properly, then regardless of how well the other steps are performed, the repair will likely fail prematurely. It is essential that all of the unsound or deteriorated concrete be removed before repair materials are applied.

Because this phase of a repair project is so important, final acceptance of a proposed concrete removal and cleaning plan should be based on actual results. The proposed methods should be evaluated by testing the methods on the concrete to be repaired. Results should be examined to ensure that the proposed removal and cleanup will meet specification requirements, including surface roughness and bond strength requirements. It is typically not difficult to test bond strength; refer to (ACI 503R, 1993) (ICRI 210.3, 2004).

a. Saw Cut Perimeters

Usually, the first step in preparing the old concrete for repair is to saw cut the perimeter of the repair area to a minimum depth of 1 inch, or more if possible (figure 18). For thinner repairs, grinders can be used to prepare edges to a minimum depth of ¼ inch. The exceptions are when removing concrete by hydrodemolition (figure 19) and when removing concrete damaged from reinforcing steel corrosion. In the case of hydrodemolition, the concrete removal process leaves rough edges, so saw cutting after removal saves time and money. For concrete removal around corroded reinforcing steel, it is important to continue to remove concrete beyond the areas of corrosion. That area is not precisely known until the concrete is removed, at which time the saw cuts can be made. During saw cutting, it is important to ensure that any embedded items, including reinforcing steel, are not damaged.

The purpose of the square perimeter edges is to provide a retaining boundary against which the repair material can be compacted and consolidated. Without square edges, poor compaction and feather (very thin) edges of repair material will result at the repair perimeters. Experience shows that these repair areas will usually fail quickly; thus, feather edge perimeters to repair areas are not allowed. Cutting to the full depth of the repair is not usually necessary, although doing so is advisable whenever possible. The saw cuts should be perpendicular to the concrete surface, or tilted inward between 5 and 10 degrees, to provide a retaining keyway that can mechanically hold the repair material into the area. Tilting the

saw inward more than 10 degrees may result in a repair with weak top corners and hard to fill areas in the lower corners of the repair cavity. The saw cut edges should never be beveled outward.

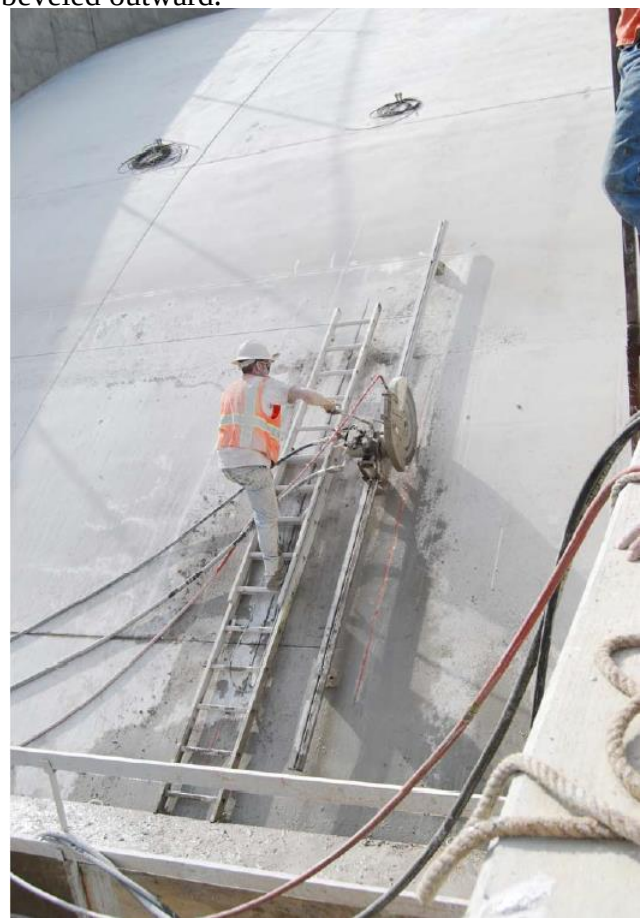

Figure 18. Using a large, rail-mounted saw to cut completely through a concrete slab.

Figure 19. Saw cutting the perimeter after hydrodemolition removed most of the concrete.

Closely following the shape of the repair area with multiple short saw cuts, as seen at the bottom of figure 20, is usually counterproductive. The cost of sawing such a shape most likely will exceed the cost of increased concrete removal, and the resulting repair may be less attractive than repairs with simple rectangular shapes. In addition, many corners and angles will increase the likelihood of cracking in the repair material. Finally, saw cuts should not meet in acute angles, as shown at the top of figure 20. It is difficult to properly compact repair material into such sharp corners.

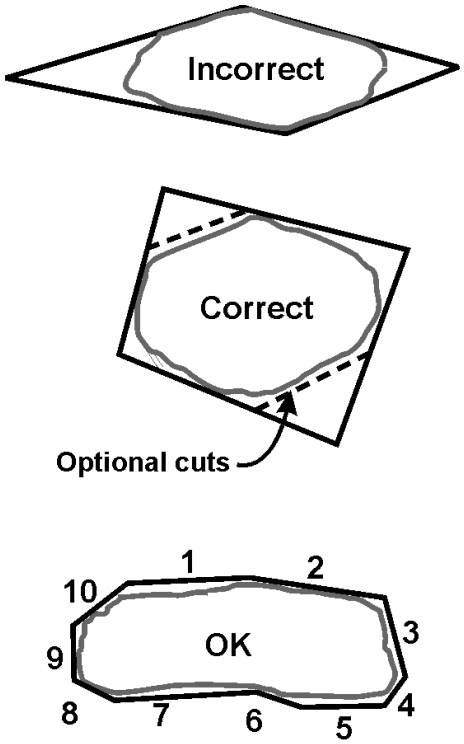

REPAIR PERIMETER SHAPES

Figure 20. Examples of saw cut shapes.

Saw kerfs should not cross. Doing so results in grooves in the existing concrete that are difficult to fill and that can serve as a site for further deterioration or cracking, due to trapped water and other debris. The saw cut perimeters should have rounded corners, as shown in figure 21, whenever reasonable. Rounded corners cannot be cut with a circular concrete saw, but the cuts can be stopped short of the intersection and rounded using a chipping hammer carefully held in a vertical orientation. Another option is to take short cores at the corners.

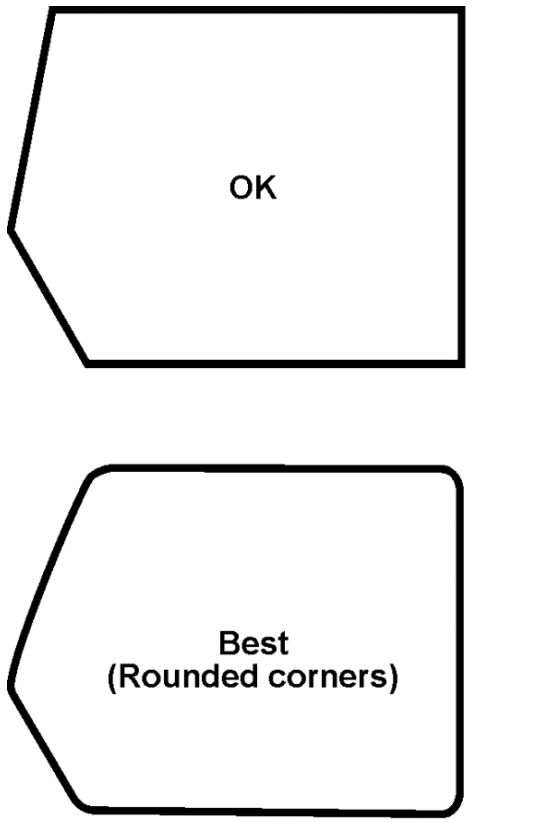

REPAIR PERIMETER SHAPES

Figure 21. Rounded corners are best.

b. Concrete Removal

All deteriorated or damaged concrete must be removed from the repair area to provide sound concrete for bonding of the repair material. No repair material will be effective long term when placed on damaged or deteriorated concrete. In most cases, it is good practice to remove at least 1-½ inches of concrete. Experience shows that repairs thinner than 1-½ inches may not be as durable. However, this is a very rough rule of thumb, and the focus should be on using a repair thickness that is suitable for the situation and that will be long lasting. There are many cases where 1-½ inches will not be thick enough and some cases where it may not be advisable to remove concrete to that depth.

The first choice of concrete removal techniques should be high pressure (8,000 to 40,000 pounds per square inch [psi]) hydroblasting or hydrodemolition (figure 22). These methods can be very effective for large jobs. They have the advantage of removing the unsound concrete, while leaving high quality concrete

in place. A further advantage is that they do not leave microfractured surfaces on the old concrete. To use hydrodemolition equipment, typically one or more calibration tests are conducted to determine the operating parameters of the equipment to achieve the desired depth of removal (figure 23). Additional calibration tests may be needed if concrete conditions change, or if a different depth of removal is needed for different areas of the repair. When using hydrodemolition or other high water pressure concrete removal and preparation methods in areas with unbonded prestressing steel reinforcement, care must be exercised to prevent water from entering into the sheathing surrounding the steel. Further damage may result, or the long-term durability of the steel could be compromised. A disadvantage of high pressure water blasting techniques is that the waste water and debris must be handled in an environmentally acceptable manner as prescribed by regulations. Concrete debris left in hydrodemolition cavities can be difficult to remove if they are allowed to dry.

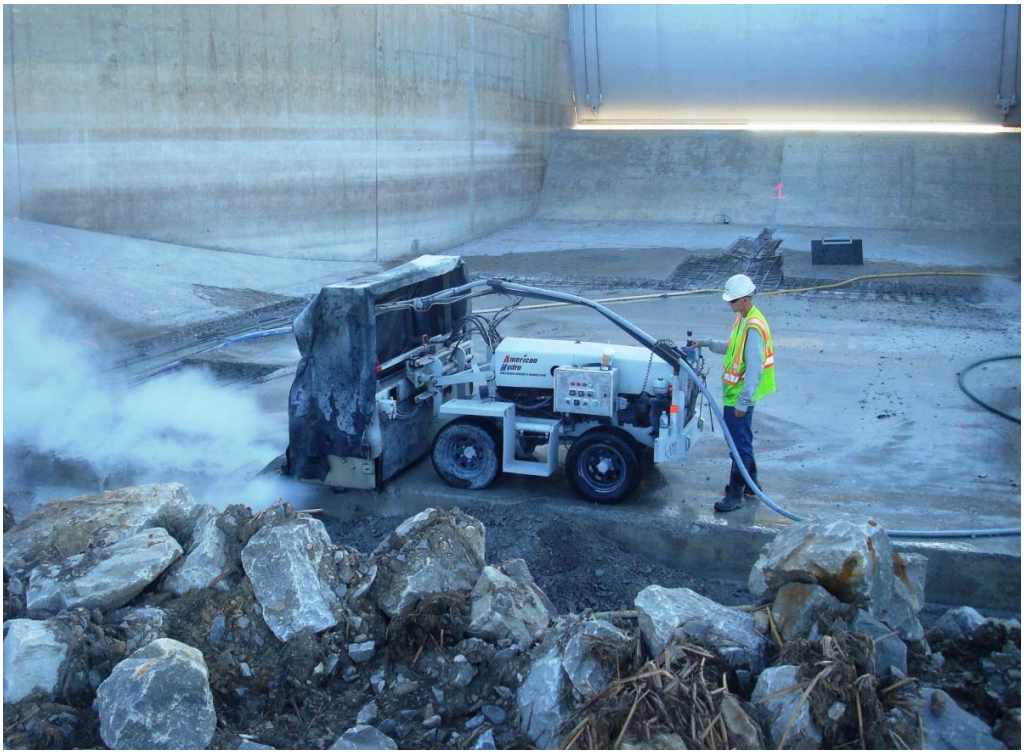

Figure 22. Hydrodemolition using water pressure of 20,000 psi to remove about 6 inches of concrete.

Impact concrete removal techniques for partial depth repairs, such as jackhammering for large jobs and bush hammering and scabblers for smaller areas, have been used for many years. These removal procedures are quick and economical, but the costs of subsequent removal of the microfractured surfaces resulting from these techniques must be included when comparing the costs of these techniques to the costs of high-pressure water blasting. For partial depth repairs with reinforcing steel, the maximum size of jackhammers should usually

be limited to 15 or 30 pounds (figure 24). Larger jackhammers remove concrete at a high rate but are more likely to damage surrounding sound concrete. The larger hammers can also impact and loosen the bond of concrete to reinforcing steel for a significant distance away from the point of impact. Pointed hammer bits, which are more likely to break the concrete cleanly, rather than to pulverize it, should be used to reduce the occurrence of surface microfracturing. Bits should be kept sharp throughout the removal process. Using spade shaped bits is appropriate near saw cut perimeters.

Figure 23. The first calibration test resulted in excessive concrete removal and bent rebar.

Shallow surface deterioration (usually less than ½-inch deep) is best removed with shot blasting (figure 25) or dry or wet sand-blasting (figure 26). Shot blasting equipment is very efficient and usually includes some type of vacuum cleanup for resulting dust and debris. The use of such equipment is much more environmentally acceptable than dry sand blasting. The need for removal of deteriorated concrete to shallow depths is seldom encountered in Reclamation repairs, except for removal of microfractured surfaces, for cosmetic surface cleaning, or for application of a surface treatment.

Figure 24. Using a small electric chipping hammer to remove damaged concrete.

Figure 25. Shotblasting using a small unit prior to application of a healer-sealer (Sealers and Coatings). Even though this unit is small, it is capable of preparing a large area fairly quickly.

Figure 26. Sand blasting a concrete deck prior to application of a healer-sealer (Sealers and Coatings).

Shallow deterioration to concrete surfaces can also be removed with tools known as scabblers (figure 27) and bush hammers, but their use is discouraged. These tools usually have multiple bits (figure 28) or heads with points that pound and pulverize the concrete surfaces in the removal process. Their use greatly increases the occurrence of microfractures in the remaining concrete surfaces. Extensive high-pressure water, sand, or shot blasting efforts are then needed to remove the resulting microfractured surfaces. Such efforts are seldom achieved under field conditions. For this reason, Reclamation's specifications prohibit the use of scabblers and bush hammers for concrete removal.

Figure 27. A scabbler used to remove concrete.

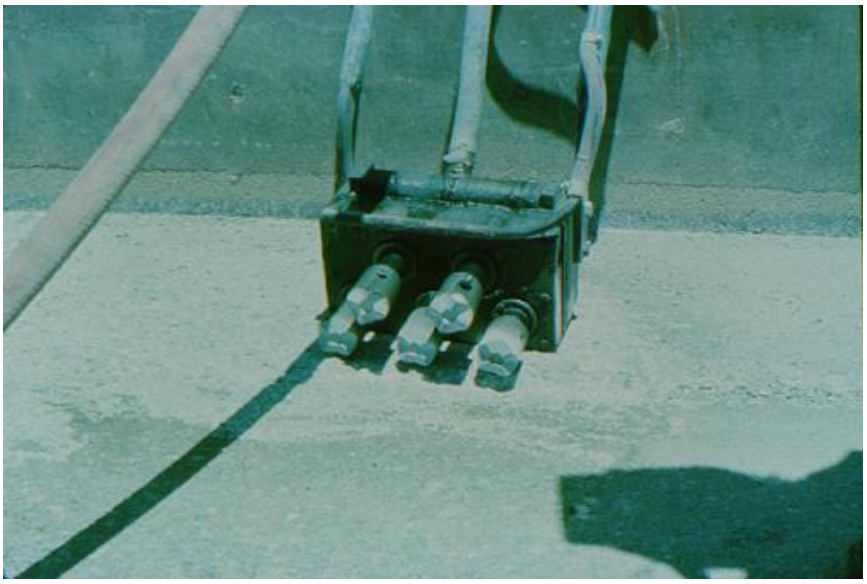

Figure 28. View of the bits in a scabbler used to remove concrete. Similar bits can be used in bush hammers.

c. Reinforcing Steel Preparation

Reinforcing steel exposed during concrete removal requires special treatment. In general, if more than one-third of the circumference of the steel is exposed, the concrete should be completely excavated from around the steel. In other cases, it is best to completely expose the reinforcing steel if any of it is exposed during concrete removal. For concrete repairs that may be subjected to unusual loads, it may be appropriate to excavate around reinforcing steel, even if the damage is shallow. The depth of excavation under reinforcing steel should be at least equal to the nominal maximum size aggregate of the repair material plus ¼ inch, or at least 1 inch deep, whichever is greater.

If the steel is corroded, it should be completely exposed, and all surrounding concrete should be removed. The bars should be exposed to the point where the concrete is well bonded to the steel, and the steel is not affected by corrosion. The cause of the corrosion should be determined. If the corrosion is a result of chloride contamination, all concrete with water soluble chloride content higher than about 0.15 percent to 1.00 percent, by mass, of cementitious materials should be removed, depending on service conditions. However, this limit varies among national and international standards, and it can be affected by a number of factors. A corrosion specialist should be consulted if repairs to concrete damaged by reinforcing steel corrosion are planned. If contaminated concrete is not removed, there is a good chance that corrosion of the steel near the intersection of the new and old concrete will accelerate, which is commonly called the “halo” or “ring” effect.

When the reinforcing steel is exposed, all loose scale, rust, and concrete must be removed by wire brushing or high-pressure water or sand blasting. It is not necessary to clean the steel to white metal condition; just remove all the loose or poorly bonded debris that would affect bond between the repair material and the reinforcing steel.

If corrosion has reduced the cross section of the steel to less than 80 percent of its original diameter, a structural analysis may be needed to determine if the steel is still adequate. Guidelines for performing this analysis for buildings are found in ACI 562 (ACI 562, 2013). If the remaining steel is deemed inadequate, the affected bars should be removed and replaced using reinforcing steel in accordance the latest guidance from ACI Committee 318 (ACI 318, 2013).

Figure 29 shows a schematic of the correct concrete removal and preparation process for repairing a delamination occurring at the top mat of reinforcing steel of a concrete slab. Figure 30 shows correct preparation of a concrete defect that extends entirely through a wall. Figure 31 shows a properly prepared repair area on a spillway approach apron.

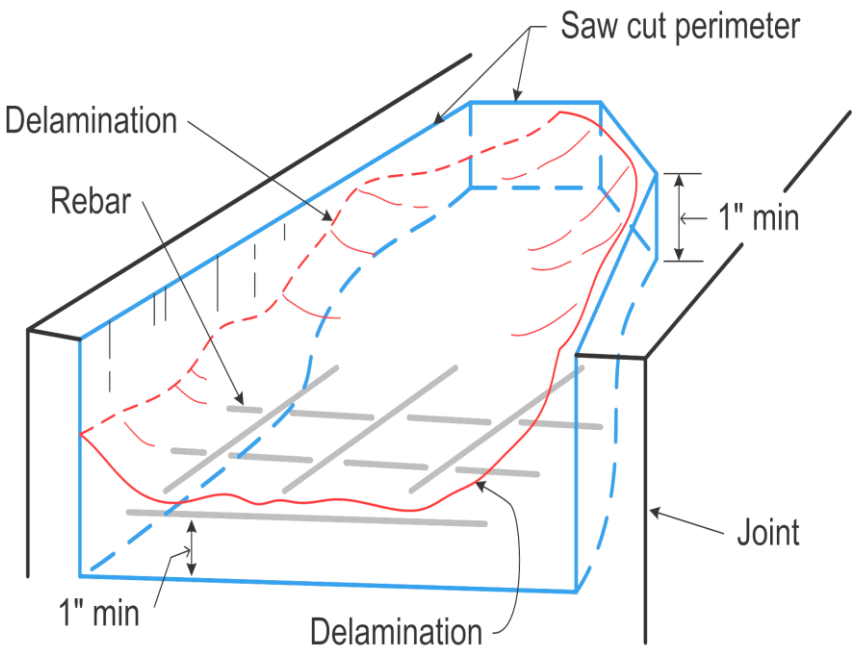

Figure 29. A schematic of the proper method for concrete preparation for a concrete spall repair.

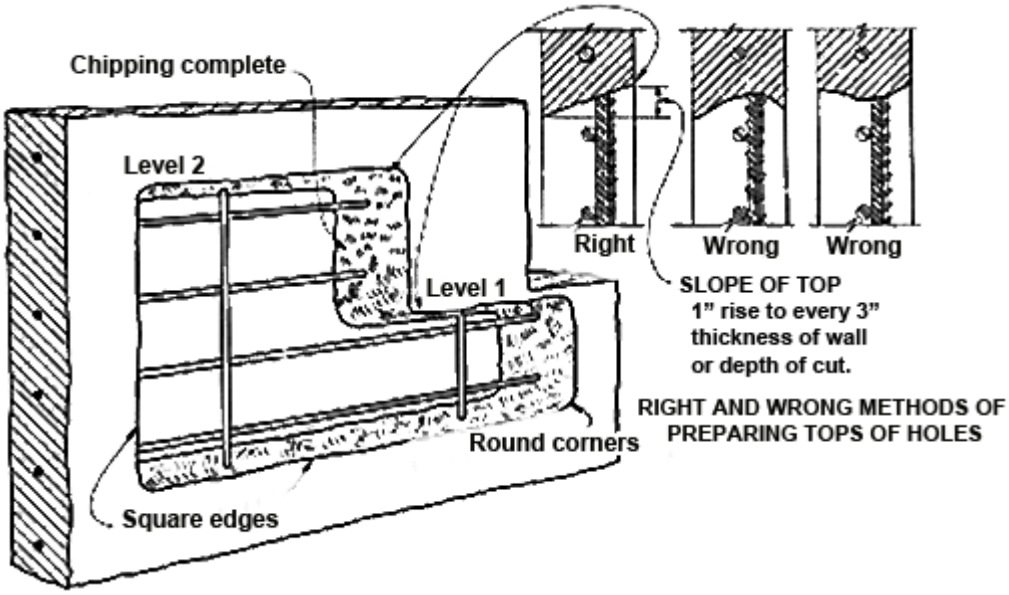

Figure 30. A schematic of the proper method for preparing a hole through a concrete wall.

Figure 31. A properly prepared area for repair to a spillway approach apron.

d. Primary Cleaning

After concrete removal and preparation of the reinforcing steel are completed, primary cleaning must be performed. Some steps for this have already been described and include contained shotblasting, sandblasting, or water blasting to

remove any weakened or microfractured surfaces resulting from the initial concrete removal. Essentially all mechanical concrete removal techniques leave behind some microfractured concrete that should be removed by cleaning (Bissonnette et al., 2012) (Morency et al., 2007). If water blasting is used, use pressure that is sufficiently high to prepare the surface. Pressures up to 15,000 psi may be necessary, depending on the condition of the concrete surface, although 4,000 to 5,000 psi may also work.

Remove any other materials that will weaken the bond between the remaining concrete and the repair material. Include saw cut or ground faces in this step.

e. Protecting the Prepared Area

After the repair area has been prepared, it must be kept clean and protected from damage until the repair materials can be placed and cured. In hot climates, this might involve providing shade to keep the concrete cool, thereby reducing rapid hydration or hardening. If cold weather conditions exist, steps must be taken to provide sufficient insulation and/or heat to prevent the repair area from being covered with snow or ice.

Repair activities can contaminate or damage a nearby properly prepared site. Workers placing repair materials in one area of a repair can track debris into an adjacent repair area. Once deposited on a prepared surface, this material will serve as a bond breaker if it is not cleaned up before the new repair material is placed. Additional preparation will be needed if a repair area is allowed to become damaged or contaminated.

f. Secondary Cleaning

Within 48 hours prior to placement of repair material, use low-pressure water jetting to remove any materials that will impair bond (figure 32). Wash all surfaces thoroughly. Pressures up to 5,000 psi may be required for this step. Ensure that surface moisture conditions meet the repair material requirements. Surfaces should be kept wet or dry, depending on the repair material to be used. Surfaces that will receive polymer concrete or epoxy-bonded materials should be kept as dry as possible. Some epoxies will bond to damp concrete, but they always bond better to dry concrete.

Surfaces that will be repaired with a cementitious repair material should be in a saturated surface dry (SSD) condition immediately prior to material application. This condition is achieved by soaking the surfaces with water for 2 to 24 hours just before repair material application. Immediately before material application, the repair surfaces should be allowed to start drying, using natural means or by using oil-free compressed air. The surface should appear slightly damp, with no

standing water (figure 33). In many cases, a slightly dry condition is much better than a wet condition. The SSD condition prevents the existing concrete from absorbing excess mix water from the repair material and promotes development of adequate bond strength between the repair material and the substrate concrete. The presence of free water on the repair surfaces during application of the repair material must be avoided. Excess water at the repair surfaces creates a higher water content at the interface of the new and old concrete, resulting in decreased bond strength and durability.

Figure 32. Using water jetting for secondary cleaning (4,000 psi).

The influence of surface moisture on the bond between old concrete and repair is an issue of significant importance. As described above, SSD conditioning of the substrate prior to application of cementitious repair materials is usually recommended and used. However, there is no clear physical meaning that defines the SSD condition, and there exists no strict definition of what actually constitutes SSD: saturation to what degree, to what depth, how to measure it, etc. Investigation is currently taking place to better determine what is needed for optimal moisture content to achieve the best bond (Bissonnette et al., 2013).

For noncementitious repairs or surface treatments, different surface moisture conditions from those discussed above are usually required. Some materials require that the surfaces be dry, while others can tolerate some surface moisture. When using these types of materials, be sure to follow the manufacturer’s surface moisture requirements.

Figure 33. Using water spray to keep the substrate surface in an SSD condition between placements.

6. Apply the Repair Method

There are 14 different standard concrete repair methods/materials described in chapter D, and guide specifications are provided in Reclamation's M-47 specification (Part II of the Guide). Each of these materials has unique requirements for successful application. Whenever a repair is planned, the information provided in chapter D and the guide specifications in Part II should be reviewed.

7. Cure the Repair Properly

All of the standard repair materials require proper curing procedures. Some systems require extensive water curing, others require water curing followed by drying, and some systems require protection with no water exposure until they are hardened. Curing is usually the final step of the repair process, followed only by cleanup and demobilization. It is common to find that the curing step has been shortened, performed haphazardly, or eliminated entirely as a result of workers eager to leave the job site.

Proper curing is critical to long-term repair material performance. Money and effort to adequately cure the repair represent a sound investment to ensuring long-term performance. Inadequate or improper curing can result in significant loss of repair material performance and, ultimately, a loss of money. At best, improper curing will reduce the service life of the repairs. More likely, inadequate or improper curing will result in the need to remove and replace the repairs. The costs of the original repair are completely lost, and the costs of the replacement repair will be greater because the replacement repairs will be larger and must include the cost of removing the failed repair material.

C. Causes of Damage to Concrete

This chapter discusses the common causes of damage to Reclamation concrete. The discussion for each cause of damage consists of the following:

1. A description of the cause and how it damages concrete

2. A discussion and/or listing of appropriate methods and materials to repair that particular type of concrete damage

This sequence for discussion was chosen to highlight the importance of first determining the cause(s) of damage to concrete before trying to select a repair material or method. Before a repair is attempted, the full description of the selected repair method, found in chapter D, should be reviewed.

In general, if there is damage to concrete, then it was not durable for its service or exposure condition(s). Thus, the causes of damage can be broadly divided into three categories:

- An inability to withstand its intended design loadings, such as normal structural loads, or unusual loadings caused by flooding or earthquakes

- An inability to withstand the physical environment, such as abrasion-erosion, cavitation, and freezing and thawing

- An inability to withstand the chemical environment, such as sulfate attack, alkali-aggregate reaction, or chloride intrusion (leading to corrosion of embedded reinforcing steel)

Factors that can lead to damage resulting from these conditions are described below. Many of these factors are also described in Appendix IA, "Historical Development of Durable Concrete for the Bureau of Reclamation."

1. Excess Concrete Mix Water

The use of excessive mix water was common practice in many Reclamation structures built before about 1920 (appendix IA). The excessive mix water certainly made placing concrete easier in many cases, but it resulted in a low quality material that would likely not have a service life as long as was anticipated and desired. Unfortunately, the use of excessive mix water still occasionally occurs today.

Excessive water reduces strength, increases drying shrinkage, increases porosity, increases creep, and reduces the abrasion resistance of concrete. All these factors mean that the concrete will not be durable in many exposure conditions.

Figure 34 shows the effect of water-cement ratio on the durability of concrete. In this figure, high durability is associated with low water-cement ratio and the use of entrained air.

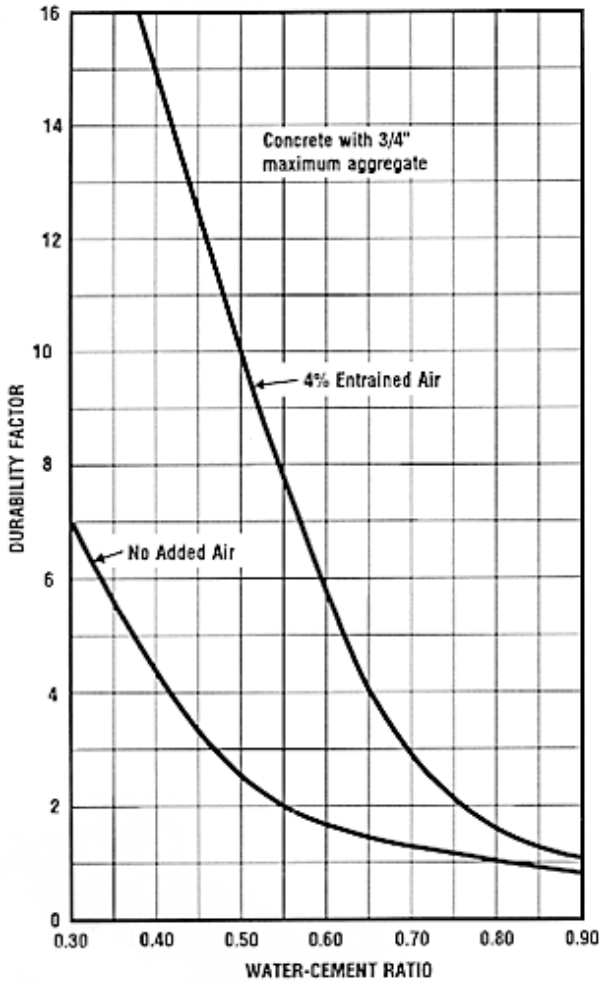

Figure 34. Durability improves with lower water content and the use of entrained air in the concrete.

Damage resulting from the use of excessive mix water can be difficult to diagnose because it can be masked by damage from other causes. Freeze-thaw cracking, abrasion erosion damage, or drying shrinkage cracking, for example, are often blamed for damage to concrete when, in reality, excessive mix water caused the low durability that allowed these other mechanisms to damage the concrete.

To help identify if excessive mix water is the cause of damage, it is usually necessary to obtain samples of similar but undamaged concrete. During a petrographic examination, excessive mix water in hardened concrete can be detected by the presence of bleed water channels and pockets under aggregate particles caused by bleed water. If available, examination of the batch sheets, mixture records, and field inspection reports may provide confirmation of the use of excessive mix water in damaged concrete. However, water added to transit truck mixers at the construction site, or applied to concrete surfaces during finishing operations, often goes undocumented. For that reason, Reclamation's concrete guide specification requires that all water added to the concrete mixture be documented.

Repairs bonded to this type of concrete will likely have a short service life. The only permanent repair for concrete made with excessive mix water is removal and replacement of much or all of the original concrete.

However, depending on the extent and nature of damage, a number of maintenance or repair methods can be useful in extending the service life of such concrete. If the damage is detected early, application of concrete sealing compounds such as the high solids content (greater than 20 percent) siloxane or silane systems (section D.1.c.), HMWM systems, or low viscosity epoxies (sections D.1.a. or D.1.b.) will reduce water penetration and improve resistance to freeze-thaw damage and other deterioration mechanisms. In addition, coatings may provide protection to the concrete (section D.1.d.). Such treatments are not permanent and will require reapplication at 5- to 20-year intervals.

For repairs less than 1-½ inches thick, the guidance given in section D.2 can be used, depending on the specific nature of the repair. In many cases, holes in concrete can be repaired using the information provided in section D.2.c. Epoxy bonded replacement concrete (section D.2.e.) can be used under special circumstances for thinner repairs. In general, however, bonding agents are not recommended. Instead, proper practices and procedures for concrete removal, cleaning, and adequate curing are required. For repairs that are about 1-½ inches thick and thicker into the concrete, information from sections D.2.f. through D.3.d. can be used, again depending on the specific needs of the repair.

2. Faulty Design

Design faults can create many types of concrete damage. The simplest case of damage occurs when the concrete is not sufficient for the actual loading, which rarely occurs in Reclamation structures. However, one type of design fault that is somewhat common is positioning embedded items, such as electrical conduits or

outlet boxes, too near the exterior surfaces of concrete structures. Cracks can form in the concrete over and around such embedded metal features and allow moisture into the concrete. This can lead to accelerated deterioration to concrete susceptible to freeze-thaw deterioration or alkali-silica reaction (ASR). Bases of handrails or guardrails are sometimes placed too close to the exterior corners of walls, walkways, and parapets with similar results. These bases or intrusions into the concrete expand and contract with temperature changes at a rate different from the concrete. Tensile stresses, created in the concrete by expanding metal, lead to cracking and allow for additional moisture penetration, which can lead to freeze-thaw or ASR damage. Long guardrails or handrails can create a different problem. The pipe used for such rails also undergoes thermal expansion and contraction. If sufficient slip joints are not provided in the rails, the expansion and contraction causes cracking at the points where the rail attachment bases enter the concrete. This cracking also allows accelerated damage to the concrete, similar to the description above. In other cases, the holes in the concrete for the rail posts can fill with water and freeze, causing cracking.

Another case of faulty design involves using inappropriate concrete mixture proportions for a concrete component of a structure. For example, using a structural concrete mixture for thick, large placements may cause thermal cracking (section C.11) as a result of the heat that is generated while the concrete cures (figure 35).

Figure 35. Thermal cracking in a thick concrete wall. The concrete got fairly hot during curing and then cooled too quickly. The picture shows epoxy resin injection repairs underway.

Insufficient concrete cover over reinforcing steel is a common cause of damage to concrete structures. Insufficient cover allows for easier corrosion of the reinforcing steel. The iron oxide byproducts of this corrosion occupy more space in the concrete than the reinforcing steel originally occupied, which results in cracking and delaminating in the concrete (figure 36).

Figure 36. Corrosion of reinforcing steel from deicing salts used on the bridge.

Reclamation usually requires a minimum of 2 inches of concrete cover over reinforcing steel, or, 3 inches of cover if the concrete is in contact with the ground. However, for concrete exposed to aggressive or corrosive environments, this may be insufficient. Additional coverage in these exposure conditions should be considered. Design experts should be consulted in this case, to consider the potential for larger drying shrinkage cracks in the surface of the concrete as a result of having the reinforcement at a greater depth.

Failure to provide adequate joints, or failure to make expansion joints wide enough to accommodate temperature expansion in concrete slabs, can result in damage. The concrete will crack wherever a joint was needed but not provided. Unfortunately, such cracks will not be as visually attractive as a formed, tooled, or sawed joint. Formation of cracks relieves tensile stresses and, though unsightly, may not require repair. If repairs are needed, many times the best option is to treat the crack as a joint and repair it using techniques appropriate for a joint.

Inadequate joints (too few or too narrow) can cause serious damage to bridge deck surfaces, dam roadways, and the floors of spillways. Such concrete can experience large daily and seasonal temperature changes, resulting in relatively

large expansions and contractions. The resulting concrete expansion is greater in the top surfaces of the slabs, where the concrete temperatures are higher, and the expansion is lesser in the cooler, bottom areas. Such expansion can cause the upper portions of concrete in adjacent slabs to butt against one another at the joints between the slabs. The only possible direction of relief movement in such slabs is upward. Either by expansion on its own or, in some cases, when these forces are combined with effects of deterioration, cracking and delaminations can form in the concrete, starting at the joints and extending 1 or 2 inches back into the slab. These delaminations are commonly located at the top mat of reinforcing steel. In cold climates, water can enter the cracks and delaminations, where it undergoes cycles of freezing and thawing. This action causes the delaminations to grow and extend to as much as 3 to 5 feet away from the joint.

Figure 37 is an exaggerated example of such damage.

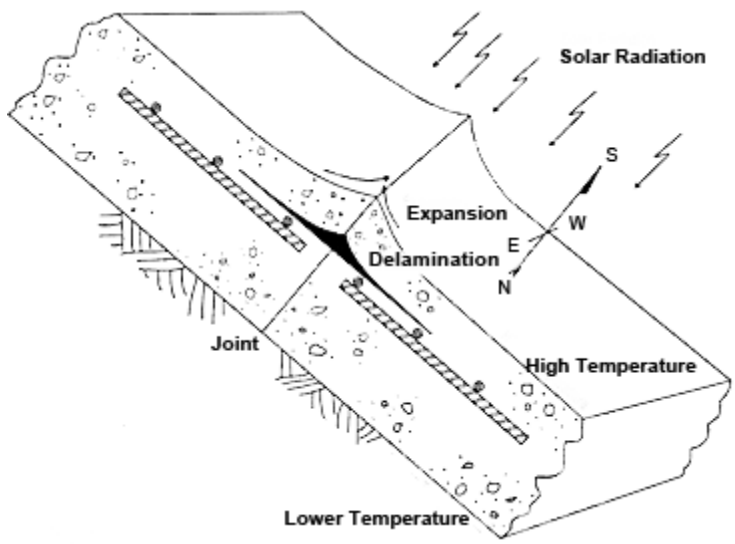

Figure 37. Damage resulting from expansion at tight joints.

For exposure conditions where this might occur, a modified joint detail was developed and has been used recently during the repairs of several spillways (figure 38) (von Fay K., 2007). For this detail, it is important to realize that the joint sealant is not intended to seal the joint from water intrusion (there is a waterstop for that); rather, it is intended to keep debris out of the expansion slot. Further, a thick layer of sealant will help ensure that the material stays in place during spilling.

Repair of damage caused by faulty design may be very difficult if the design feature cannot be easily adjusted. Embedded metal features can be removed, handrails can be provided with slip joints, and guardrail attachment bases can be changed to bolt-on bases. Mitigation of insufficient concrete cover over reinforcing steel can be difficult because additional cover needs to be added,

which can lead to other required changes. In some cases, repairs can be made with concrete sealing compounds or coatings (section D.1.d.) to reduce water or chloride penetration.

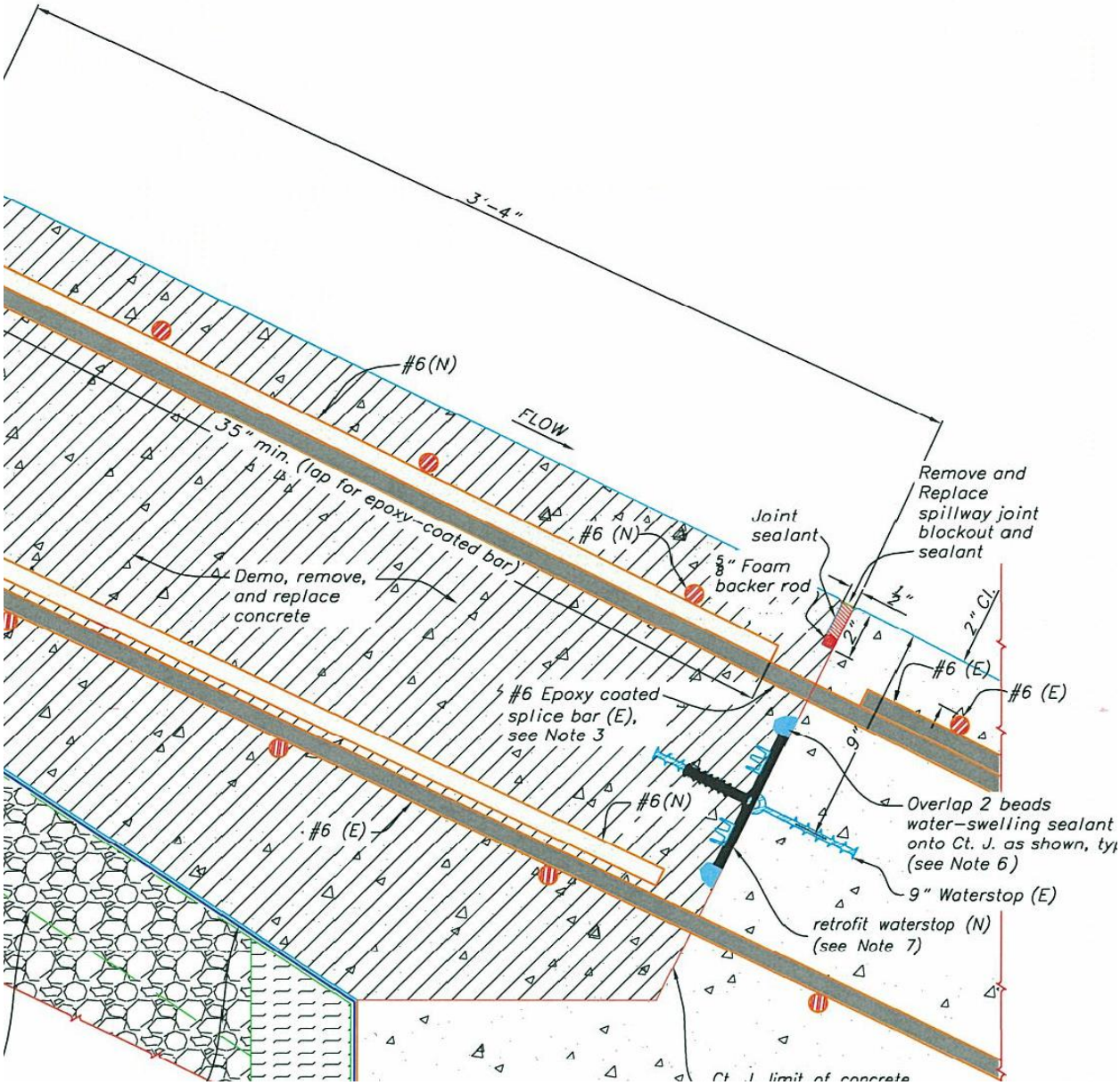

Figure 38. Joint detail for joints that experience excessive expansion that results in damage. This detail shows an example for placing a new slab next to an existing slab.

Damage caused by design faults can most likely be repaired using replacement concrete (section D.3.a.), polymer concrete (section D.2.d.), a suitable packaged repair material (section D.2.f.), or resin injection (section D.4.a.).

3. Construction Defects

Some of the more common types of damage to concrete that are caused by construction defects are rock pockets and honeycombs, form failures, dimensional errors, and finishing defects.

Honeycombs and rock pockets are areas of concrete where voids are left, due to failure of the paste or concrete to completely fill the spaces around coarse aggregate particles and reinforcing steel (figures 39 and 40). These defects, if minor, can be repaired with Portland cement mortar (section D.2.b.) if less than 24 hours have passed since form removal and not more than 72 hours has passed since concrete placement. If repair is delayed longer than this, or if the rock pocket is extensive, the defective concrete must be removed and replaced with dry pack mortar (section D.2.c.), a packaged repair material (section D.2.f.), or a thick repair method (replacement concrete [section D.3.a.], preplaced aggregate concrete [section D.3.b.], shotcrete [section D.3.c.], or silica fume concrete [section D.3.d.]).

Figure 39. Large voids, rock pockets, and honeycombs resulting from inadequate concrete consolidation.

Some minor defects resulting from form movement or failure can be repaired with surface grinding (section D.2.a.). More likely, the resulting defect is either simply accepted by the owner, or the contractor is required to remove the defective concrete and reconstruct that portion of the structure.

Dimensional errors can occur in concrete construction. Whenever possible, it is usually best to accept the resulting defect, rather than attempt to repair it. If the

deficiency cannot be accepted, complete removal and replacement is probably the best option. Occasionally, dimensional errors can be corrected by removing the defective concrete and replacing it with a thick concrete repair.

Finishing defects usually involve overfinishing or adding water, cement, or other substances to the concrete surface during finishing procedures (figure 41). In each instance, the resulting surface can be porous, permeable, or have low durability

Figure 40. An example of inadequately consolidated concrete that needs repair.

Figure 41. The addition of water or other substances during finishing can lead to weakened and damaged concrete surfaces.

Poorly finished surfaces can exhibit surface spalling early in their service life (figure 42). Repair of surface spalling involves removal of the weakened concrete and replacement using a packaged repair material (section D.2.f.) or replacement

concrete (section D.3.a.). If the deterioration is detected early, the service life of the surface may be extended by using concrete sealing compounds (sections D.1.a. through D.1.c.). The service life of sealing compounds for low quality concrete surfaces will likely be short.

Finally, surface defects do not always indicate improper finishing. Other forms of deterioration can cause surface defects, including aggregate popouts, salt scaling (figure 43) and freeze-thaw damage.

Figure 42. Surface damage appearing in new concrete caused by the addition of water during finishing.

Figure 43. Salt scaling that resulted when water containing deicing salts froze on poor quality concrete surfaces.

4. Sulfate Deterioration

Sodium, magnesium, and calcium sulfates are salts commonly found in the alkali soils and groundwater in the Western United States. These sulfates react with the hydrated lime and hydrated aluminate in cement paste and form calcium sulfate and calcium sulfoaluminate. The volume of these reaction byproducts is greater than the volume of the cement paste from which they are formed, causing cracking of the hardened concrete. Once the cause of damage is confirmed, repairs must be performed using sulfate resisting materials, including using low permeable concrete (low water/cement and higher cement and fly ash contents), and incorporating a sulfate resisting cement (Type II and Type V), which have a low calcium aluminate content. Reclamation's concrete guide specifications and ACI 318 provide guidance on selecting cement types and mixture proportions based on sulfate contents in the soil or groundwater.

Concrete that is undergoing active deterioration and damage due to sulfate exposure can sometimes be maintained by applying a coating (section D.1.d.) or concrete sealing compounds (sections D.1.a. through D.1.c.). Alternate wetting and drying cycles can accelerate sulfate deterioration. Some slowing of the rate of deterioration can be accomplished by interrupting the cyclic wetting and drying. Procedures for eliminating or removing waterborne sulfates are also helpful if this is the source of the sulfates. Otherwise, the deteriorating concrete should be monitored and considered for removal and replacement with concrete proportioned using Type II or Type V cement, perhaps including a Class F fly ash, as appropriate.

Sulfate attack can also manifest itself in different ways. An interesting example of sulfate attack occurred recently in a spillway in central Kansas. Concrete below the gallery drains was damaged and then repaired (figure 44). However, the repairs soon began to fail. Evaluation of cores taken from the site revealed that the damage was confined to the areas that were wet from the gallery drains, and it did not extend more than about 1 inch into the concrete. Subsequent water tests revealed that during hot summer months, the water exiting from the galleries, and then evaporating, had high sulfate contents, which resulted in sulfate attack. Once the cause of damage was determined, repairs could be made with concrete that contained sulfate resistant cement; in this case, a Type V cement.

A rare form of sulfate attack occurred recently at a west-central Montana dam. Quality issues led to installation of poor quality backfill grout to support new stoplog guides. Due to the unique exposure conditions (circulation of water near the guides to prevent water freezing near the gates, the presence of calcium carbonate constituents in the reservoir water, and very cold water), the thaumasite form of sulfate attack occurred, leading to significant weakening of the backfill grout (figure 45) (Hurcomb, 2006). The deterioration occurred relatively quickly, over just a few years. With the cause of deterioration determined, proper repairs were made during replacement of the grout.

Figure 44. Repairs that were damaged by sulfate attack. New repairs were performed using materials that are durable when exposed to sulfates.

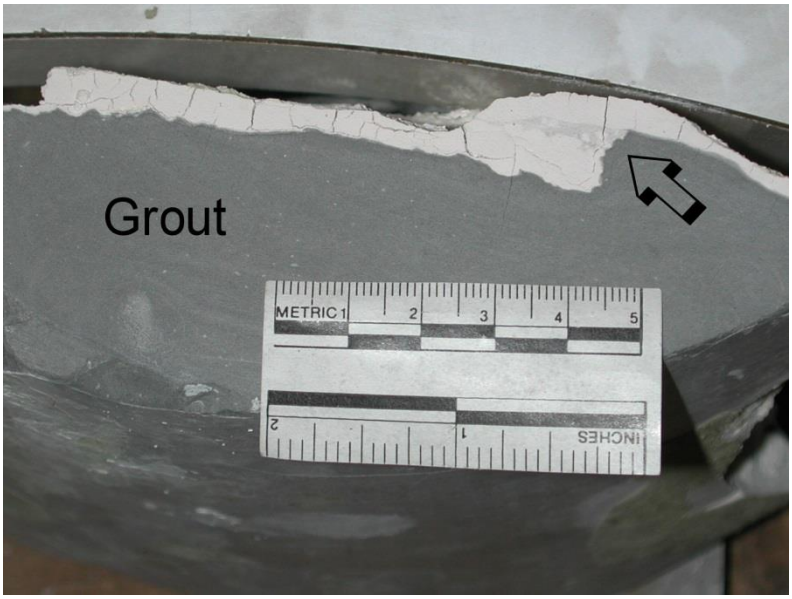

Figure 45. A cross section of backfill grout showing replacement of cement grout with thaumasite, a form of sulfate attack.

5. Alkali-Aggregate Reaction

Alkali aggregate reaction (AAR) is typically not a problem for concrete placed after about the early 1940s. For ASR (one form of AAR), alkalies in cement react with certain glassy, siliceous aggregates such as opals, chalcedony, cherts, andesites, basalts, and some quartz. The reaction products, in the presence of

water, have a swelling nature, leading to tensile stresses that cause cracking within the concrete. The cracking may allow moisture to be more readily absorbed by the silica gel, which further increases the swelling or allows or accelerates freeze-thaw damage. The problem was first observed early in Reclamation's history, but it was not fully studied until the late 1930s, after the construction of Parker Dam. At that time, the steps identified to prevent ASR were to use petrographic techniques to identify those aggregates with the potential for reaction and to specify a 0.6-percent limit of sodium and potassium hydroxide alkalies in the cement. Reclamation instituted the low-alkali limit for concrete with potentially reactive aggregates in the early 1940s (Bureau of Reclamation, 1942). Unfortunately, there are still occasions when reactive aggregates are used in concrete construction, leading to ASR damage in concrete placed well after the 1940s.

These reactions, although observed and studied for many years, still require additional research work to fully understand. Some concrete that contains alkali reactive aggregate shows immediate evidence of destructive expansion and deterioration. Other concrete might remain undisturbed for many years. Undoubtedly, both the exposure conditions and the type of aggregate involved play a role. There are no widely accepted methods to stop the reaction in existing concrete, although treatment with lithium compounds may help in some situations. In addition, although several methods have been evaluated to measure how much expansion may be left in a concrete structure, none have proven entirely satisfactory.

Petrographic examination of reactive concrete shows that a gel is formed around the reactive aggregate. This gel undergoes extensive expansion in the presence of water or water vapor (a relative humidity of 80 to 85 percent is all the water required), creating tension cracks around the aggregate and expansion of the concrete (figure 46). If unconfined, the expansion within the concrete is first apparent by pattern cracking on the surface. Usually, some type of whitish deposit will be evident in and around the cracked concrete, although that can occur for other reasons as well. In extreme instances, these cracks can become very large (figure 47). It is common for such expansion to cause significant offsets in the concrete, as well as binding or seizure of control gates on dams. In large concrete structures, ASR may occur only in certain areas of the structure, usually because multiple aggregate or cement sources were commonly used to construct large concrete structures (Stark and DePuy, 1995). Only portions of the structure constructed with concrete containing alkali reactive sand and/or course aggregate will exhibit expansion due to ASR. In addition, alkalies may migrate through concrete due to moisture gradients. This can increase the concentration of alkalies near surfaces that are exposed to wetting and drying conditions.

In new construction, low-alkali Portland cement and fly ash (pozzolan) can be used to mitigate ASR. In some cases, however, these methods may not be sufficient to stop it. If so, lithium-based admixtures may be used because they

have proven to prevent expansion due to ASR. In addition, there are American Society for Testing and Materials (ASTM) procedures for detecting potentially reactive aggregates. Reclamation has developed language for its concrete specifications to help determine if aggregates are reactive and how to mitigate for reactive aggregates and/or high alkali cement if they must be used in concrete.

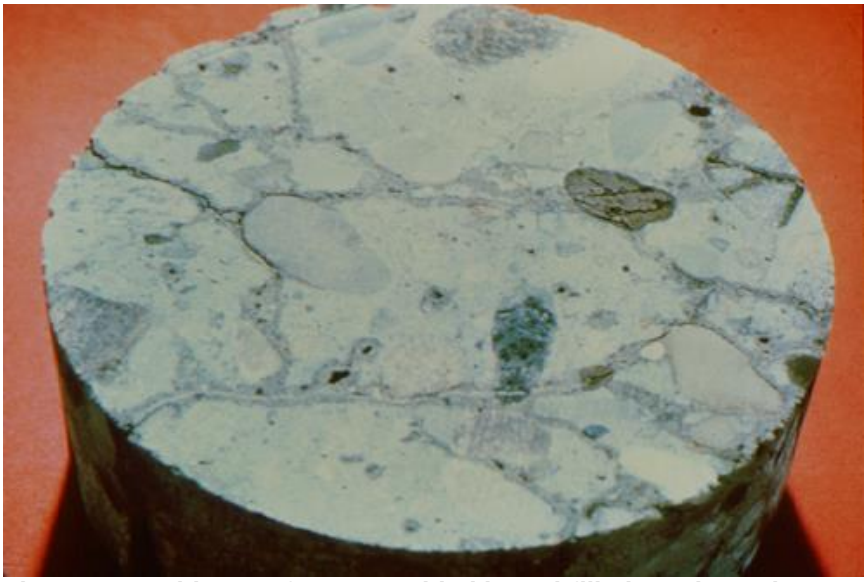

Figure 46. Evidence of ASR provided by gel-filled cracks and reaction rims around some aggregate particles.

Figure 47. Extensive cracking which can indicate ASR.

Although there are no widely applicable methods of eliminating the deterioration of alkali-aggregate reaction, the rate of expansion can sometimes be reduced by taking steps to maintain the concrete in a condition that is as dry as possible. Low viscosity epoxies and HMWM, when applied as a “healer-sealer,” can sometimes slow the rate of deterioration by lowering the moisture content of the concrete.

Repairs to concrete undergoing ASR will likely be short lived. The continuing expansion within the concrete will simply disrupt and destroy the repair material. However, in some cases, making repairs that will likely be short lived may still be the best alternative.

Structures undergoing active deterioration should be monitored for rate of expansion and movement, and the only repairs that should be made are those necessary to maintain safe operation of the facility. The binding gates of several dams have been relieved and returned to operation by using wire saws to make expansion relief cuts in the concrete on either side of the binding gates. The cuts were subsequently sealed to water leakage using polyurethane resin injection techniques (section D.4.a.). With continuing expansion of the concrete, relief cuts may have to be repeated several times.

In some structures, the expansion and movement associated with ASR slow down and cease when all the alkali components are consumed. Once the expansion ceases, repairs can be performed to rehabilitate and restore the structure to full operation and serviceability. However, it should be anticipated that, ultimately, it may be necessary to replace structures that are undergoing alkali-aggregate deterioration. This was the case with the 1975 replacement of Reclamation's American Falls Dam in Idaho. It was constructed in 1927 and replaced after extensive studies conducted by Reclamation’s Denver concrete laboratories revealed that it had been severely damaged by ASR.

Finally, even though ASR is typically associated with older structures, it can still occur in newer construction when improper concrete materials are used. For example, in the early 1970s, a new dam was constructed in Idaho. A review of construction documents indicated that some studies to determine the reactivity of the aggregates used standards that were available at the time. However, those studies either failed to show reactivity of the aggregates, or they were not done properly. When field crews began doing spall repairs in the early 2000s, they observed significant areas of deterioration (figure 48), which was determined to be from ASR.

Figure 48. Examining concrete deterioration in a structure built in the 1970s. It was later determined that the deterioration was caused by ASR.

6. Deterioration Caused by Cyclic Freezing and Thawing Weather

Freeze-thaw deterioration is a common cause of damage to concrete that was constructed in colder climates prior to the 1940s. All three of the following factors must be present for freeze-thaw damage to occur:

- Cycles of freezing and thawing temperatures
- Concrete that is saturated or nearly saturated with water
- Concrete without an adequate air void system

When all three factors are present, water in the concrete freezes and expands about 9 percent as it becomes ice. The expansion causes cracking and forces the concrete apart. During thawing, more water enters and fills the enlarged cracks and voids. In the next freezing cycle, the concrete is further damaged by water expanding into ice.

For concrete that is not properly air entrained, if the pores and capillaries in concrete are saturated or nearly saturated during freezing, the expansion exerts tensile forces that fracture the cement mortar matrix. This deterioration usually occurs from the outer surfaces inward in almost a layering manner. However, the damage can also occur below the exposed concrete surface if the moisture

gradient and temperatures are such that the saturated zone of concrete is below the surface and freezes (figure 49).

Figure 49. Freeze-thaw deterioration in a spillway slab occurring below the exposed surface, due to moisture and temperature gradients.

The rate of progression of freeze-thaw deterioration depends on the number of cycles of freezing and thawing, the degree of saturation during freezing, the porosity of the concrete, and the exposure conditions. The tops of walls (figure 50) exposed to snowmelt or water spray, horizontal slabs exposed to water, and vertical walls at the water line are the locations most commonly damaged by freeze-thaw deterioration. If such concrete has a southern exposure, it may experience freezing during the night and thawing during the day, leading to many freezing and thawing cycles throughout the year. Conversely, concrete with a northern exposure may only experience one cycle of freezing and thawing each winter, a far less damaging condition. Figure 51 shows a typical example of freeze-thaw deterioration.

Figure 50. The top of a spillway wall suffering damage from cycles of freezing and thawing weather.

Figure 51. Another example of freeze-thaw deterioration. It is common for the damage to be more pronounced at joints because they will likely stay saturated longer.

As discussed earlier in section B.1, another type of deterioration caused by cycles of freezing and thawing is damage to low quality, absorptive aggregates. If poor quality aggregates are used, they can absorb water, and then crack and deteriorate during freezing conditions. The damage typically becomes apparent at slab joints and joint corners, and the cracking pattern is typically referred to as D-cracking. A series of roughly parallel cracks exuding calcite usually cuts across the corners of such damage (figure 52). In some structures, the damage can be quite severe and require extensive repairs (section B.3; figures 10 and 12).

In 1948, Reclamation began to widely specify the use of air entraining admixtures (AEA) to protect concrete from freeze-thaw damage. Concrete structures built prior to that date did not contain AEA. Angostura Dam, begun in 1946, was the first Reclamation dam constructed with specifications that required the use of AEA (Price, 1981). This type of admixture produces small air bubbles in the concrete matrix that provide space for water expansion during freezing. If the proper AEA, used at the correct concentration, is properly mixed into high quality concrete, there should be very little damage resulting from cyclic freezing and thawing, except in very severe climates or if poor quality absorptive aggregates were used. If freeze-thaw damage is suspected in modern concrete, investigations should be performed to determine if an AEA was used, or if it was not effective. Except in cases of extremely cold and wet exposure, modern concrete that exhibits freeze-thaw damage has most likely suffered low durability from some other cause (section C.13), or the AEA did not function properly.

Figure 52. Example of D-cracking that resulted from freezing and thawing weather damage to absorptive aggregates.

For concrete susceptible to damage from freezing and thawing weather, successful mitigation of deterioration involves either reducing or eliminating the cycles of freezing and thawing, or reducing the moisture content of the concrete. It usually is not practical to protect or insulate concrete from cycles of freezing and thawing temperatures, but concrete sealing compounds (sections D.1.a. through D.1.c.) can be applied to exposed concrete surfaces to prevent or reduce water absorption. The sealing compounds are not effective in protecting inundated concrete, but they can provide protection to concrete exposed to rain, windblown spray, or snowmelt.

Repair of concrete damaged by freeze-thaw deterioration is most often accomplished with replacement concrete (section D.3.a.). The replacement concrete must contain an AEA. Making shallow repairs to concrete that has been damaged by freeze-thaw deterioration is usually not successful (figure 53). It is important that the repair be sufficiently thick to reduce or eliminate freezing and thawing cycles of the underlying concrete, or thick enough to reduce the water content of the remaining concrete. Otherwise, there is a possibility that the deterioration will continue in the remaining concrete, and the repair will debond in a relatively short time. In some cases, insufficiently thick repairs may accelerate the deterioration of the existing concrete.

Figure 53. Repairs that were not thick enough to prevent cycles of freezing and thawing weather from damaging the underlying concrete.

Concrete that is exposed to moisture and cycles of freezing and thawing weather, including concrete that is air entrained, should not be encapsulated. Encapsulating or sealing all surfaces in such conditions can lead to rapid deterioration of the concrete (Emmons and Vaysburd, 1993). This situation occurred at a pumping plant in North Dakota, where the concrete parking deck had a geomembrane between concrete layers and watertight insulating panels that were glued to the underside of the deck. Significant freeze-thaw damage occurred in the layer of concrete between the geomembrane and the insulating panels (figure 54).

7. Abrasion-Erosion Damage

Concrete structures that transport water containing silt, sand, gravel, or rock, or water at high velocities, are subject to abrasion damage. Abrasion-erosion damage results from the grinding action of silt, sand, and rock. Some stilling basins experience abrasion damage when the flows do not sweep debris from the basin, and some can have turbulent flow patterns that cause downstream sand, gravel, and rock to be pulled upstream into the basins. This material can be retained in the basin, where it produces significant damage during periods of high flow (figure 55). With larger particles, the damage can be extensive.

Figure 54. Top: Insulating panel and concrete debris on the pumping plant floor. Bottom: Original location of the panel in the ceiling below the parking deck.

Concrete surfaces damaged by smaller particles usually have a polished appearance (figure 56). The coarse aggregate is often exposed and somewhat polished due to the action of the silt and sand on the cement mortar matrix. The extent of abrasion-erosion damage is a function of many variables—duration of exposure, shape of the concrete surfaces, flow velocity and pattern, flow direction, and aggregate loading— so it is difficult to develop general theories to predict concrete performance under these conditions. Consequently, hydraulic model studies are often required to define the flow conditions and patterns that exist in damaged basins and to evaluate required modifications. If the conditions that caused abrasion-erosion damage are not addressed, repairs will also be damaged. Using high-strength repair materials will lessen the damage.

Figure 55. Abrasion-erosion damage to concrete.

It is generally understood that high quality concrete is far more resistant to abrasion damage than low quality concrete, and a number of studies (Smoak, 1991) clearly indicate that the resistance of concrete increases as the compressive strength of the concrete increases.

Figure 56. Abrasion-erosion damage from flowing water with small abrasive particles showing a polished surface.

Abrasion-erosion damage is best repaired with silica fume concrete (section D.3.d.) or polymer concrete (section D.2.d.). These materials have shown the highest resistance to abrasion damage in laboratory and field tests. Figure 57 shows the placement of silica fume concrete to repair an area of abrasion-erosion damage to a spillway located in central Colorado. For this repair, concrete was removed using hydrodemolition.

Using silica fume concrete repairs for abrasion erosion damage at remote sites can be problematic, due to the specialized materials and long haul times. Two recent jobs (Bureau of Reclamation, 2006) (Bureau of Reclamation, 2009), overcame this issue by using shotcrete-type mixtures supplied in super sacks. All the dry ingredients were delivered to the jobsite in super sacks. A transit mixer was used to mix the dry ingredients from the super sacks with water and additional admixtures (figure 58). Using this method resulted in high-strength concrete that worked well for these jobs.

Figure 57. Placing silica fume concrete in a stilling basin in central Colorado to repair abrasion-erosion damage.

Figure 58. High-strength silica fume concrete materials were delivered in 3,000-pound sacks and mixed onsite with water and liquid admixtures.

8. Cavitation Damage

Cavitation damage occurs when high velocity waterflows encounter rough areas on the flow surface. A standard rule of thumb is that cavitation damage will not occur at flow velocities less than about 40 feet per second (ft/s) at ambient pressures.

At higher velocities, roughness in the flow path may cause the water to lift off of the flow surface and create negative pressure zones that result in bubbles of water vapor. These bubbles travel downstream and collapse. If the bubbles collapse against a concrete surface, a zone of very high-pressure impact occurs over a small area of the surface. Such high impacts can remove particles of concrete, forming more rough areas, which then can create more extensive cavitation damage. Figure 59 shows the classic "Christmas tree" pattern of cavitation damage that occurred in a large concrete-lined tunnel at Glen Canyon Dam during flood releases in 1983. In that instance, cavitation damage extended entirely through the concrete tunnel lining and 40 feet into foundation rock (figure 60).

Figure 59. Typical pattern for cavitation damage in a spillway tunnel.

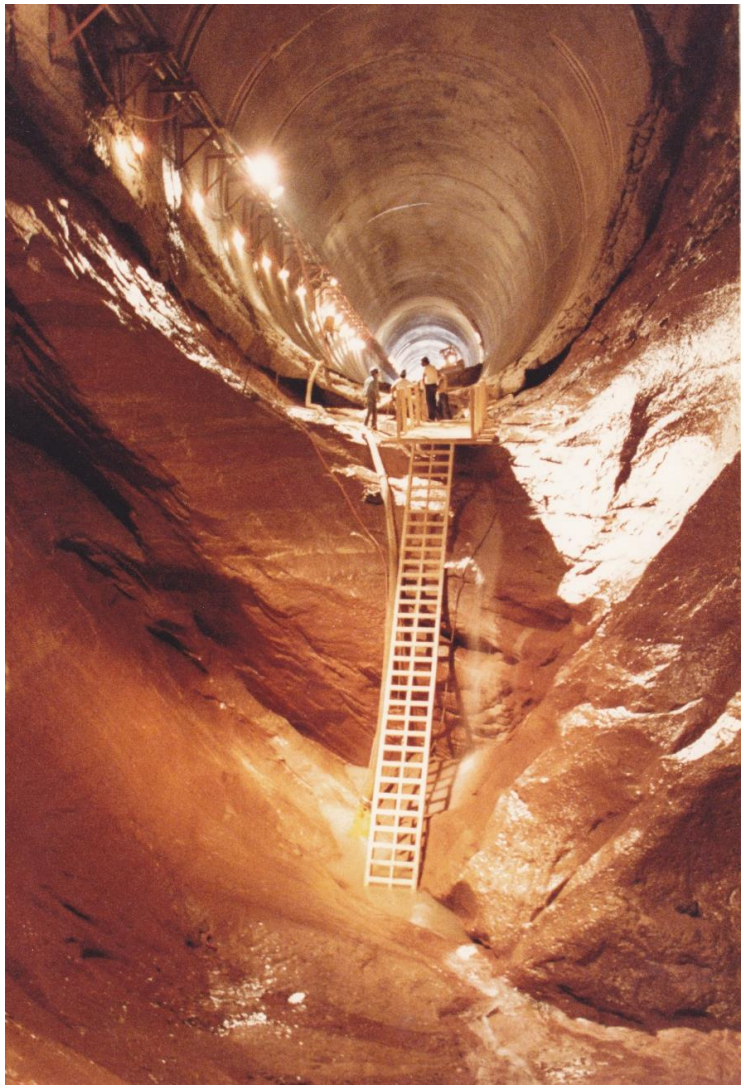

Figure 60. Cavitation damage can be very extensive, as shown here, where the damage extended deep into foundation material.

Figure 61 shows an early stage of erosion from abrasion damage to a stilling basin wall. Due to the turbulence over the step at certain flow conditions, flow velocities can be high enough to lead to cavitation. Cavitation damage is also common on and around water control gates and gate frames. Very high velocity flows occur when control gates are first being opened, or as they close, and at small gate openings. These flows can cause cavitation damage just downstream from the gates or gate frames.

Laboratories of Reclamation, the USACE, and others have tested the cavitation resistance of many different repair materials; however, to date, no material, including stainless steel and cast iron, has been found capable of withstanding fully developed instances of cavitation. Successful repairs must first include mediation of the causes of cavitation.

Figure 61. The early stages of concrete erosion from ebrasion and possible cavitation. Subsequent damage may lead to further cavitation damage.

As flow velocities approach the 40-ft/s threshold, it becomes necessary to ensure that there are no offsets or discontinuities on the surfaces in the flow path. Actual acceptable roughness and offsets will depend on actual flow conditions, and specialists may need to be consulted. Reclamation's specifications require very tight tolerances for finishing surfaces of concrete structures that will experience high velocity flows. Repairs to newly constructed concrete that fail to meet these requirements can sometimes be accomplished by surface grinding (section D.2.a.). More likely, however, concrete that does not meet surface specifications must be removed and replaced with replacement concrete (section D.3.a.).

In many cases, cavitation damage at, or adjacent to, control gates can be repaired with polymer concrete or epoxy mortar (section D.2.d.) depending on exposure conditions, packaged cementitious and chemical repair mortars (section D.2.f.), or replacement concrete (section D.3.a.). Fortunately, such damage is usually not very extensive in nature.

However, depending on the nature of the damage, great consideration must be given to how to perform the repairs. For example, in cases of shallow damage (less than 1-½ inches deep), and where polymer concrete (section D.2.d.) may not be effective, it may not be advisable to remove sound concrete material to achieve a minimum repair thickness of 1-½ inches. For these cases, using a thin, packaged cementitious or chemical repair mortar (section D.2.f.) may be warranted. Reclamation has not had consistent performance with these types of materials, so they must be carefully considered. A program to evaluate thin repair materials for use at Yellowtail Dam Spillway Tunnel was conducted to select a repair material that would have the best chance of being successful, given the difficult placement and harsh exposure conditions (von Fay K., 2009).

Fortunately, cavitation damage is usually discovered before major repairs become necessary. Repairs in areas of this type should be monitored because the damage

mechanism can occur frequently if the underlying cause of damage is not addressed. If epoxy mortar or polymer concrete is used for repairs, the repairs should be inspected frequently, because these types of materials may become unbonded over time due to thermal property incompatibilities with the underlying concrete. After performing such repairs, it may help to apply a 100-percent solids epoxy coating (section D.1.d.) to the concrete around the repair to make the surface very smooth. The glass-like surfaces of epoxy coatings may help prevent cavitation damage to the concrete. It should be understood, however, that epoxy coatings will not resist fully developed instances of cavitation damage. In addition, these coatings have a limited service life, so they should be routinely inspected.

Successful repair of cavitation damage to spillway, outlet works, or stilling basin concrete almost always requires making major modifications to the damaged structure to prevent recurrence of damage. Changes in operating procedures can also have a significant impact on the occurrence of cavitation. Consideration should be given to conducting hydraulic model studies to ensure the correctness of the design of such repairs and facility modification and/or changes in operating procedures. One modification technique, the installation of air slots in spillways and tunnels, has been very successful in eliminating or significantly reducing cavitation damage. Replacement concrete is usually used for construction of such features and the repair of the cavitation damaged concrete.

9. Corrosion of Reinforcing Steel

Corrosion of reinforcing steel can be either a cause, or a symptom, of damaged concrete. In other words, the concrete could be cracked from some other damage mechanism, which then allows steel corrosion to occur.

The alkalinity of Portland cement (pH of about 12) used in concrete normally creates a passivation layer around the reinforcing steel, which protects it from corrosion. When that layer is lost or destroyed, or when the concrete is cracked or delaminated sufficiently to allow free entrance of water and air, corrosion can occur. The passivation can be lost by intrusion of chloride ions from deicing salts or carbonation of the concrete. Carbonation is a natural process where atmospheric carbon dioxide reacts with compounds in the concrete to form calcium carbonate. The process lowers the pH of the concrete, and once it gets down to a pH of about 9, the protective passivation can be lost, allowing for corrosion. The iron oxides formed during steel corrosion require more space in the concrete than the original reinforcing steel. This creates tensile stresses within the concrete and results in additional cracking and/or delamination, which can accelerate the corrosion process.

For Reclamation, some of the more common forms of deterioration that can lead to corrosion of reinforcing steel are cracking associated with freeze-thaw deterioration, sulfate exposure, alkali-silica reaction, acid exposure, and loss of alkalinity due to carbonation (usually from insufficient cover, as discussed above).

In addition, exposure to chlorides can lead to corrosion. Chlorides change the passivation layer and greatly accelerate the rate of corrosion. Exposure to chlorides can occur from a number of sources and in several ways. The application of deicing salts (sodium or magnesium chloride) to concrete to accelerate thawing of snow and ice is a common source of chlorides. Chlorides can also be present in the sand, aggregate, and mixing water used to prepare concrete mixtures. Some irrigation structures located in the Western States transport waters that have high chloride content (figure 62). Concrete structures located in marine environments experience chloride exposure from the sea water or from windblown spray. Finally, it was once a somewhat common practice to use concrete admixtures containing chlorides to accelerate the hydration of cement in concrete placed during cold weather conditions.

Figure 62. High chlorides in water, leading to corrosion of reinforcing steel.

The occurrence of corroding reinforcing steel can usually, but not always, be detected by the presence of rust stains on the exterior surfaces and by the hollow or drummy sounds from tapping the affected concrete with a hammer. It can also

be detected by measuring the half cell potentials of the affected concrete using special electronic devices manufactured specifically for this purpose. When the presence of corroding steel has been confirmed, it is important to define what actually caused the corrosion because the cause(s) of corrosion will usually determine which repair procedure should be used. Further discussion of such repair procedures can be found elsewhere in this Guide. Once the cause of corrosion damage has been defined and mitigated, proper preparation of the corroded steel exposed during removal of the deteriorated concrete becomes important. See the discussion under Reinforcing Steel Preparation for guidelines. Corroded reinforcing steel may extend from areas of obviously deteriorated concrete well into areas of apparently sound concrete. Care must be taken to remove sufficient concrete to include all the corroded steel.

10. Acid Exposure

The more common sources of acidic exposure involving concrete structures occur in the vicinity of underground mines. Drainage waters exiting from such mines can contain acids of sometimes surprisingly low pH value. A pH value of 7 is defined as neutral. Values higher than 7 are defined as basic, while pH values lower than 7 are acidic. A 15- to 20-percent solution of sulfuric acid will have a pH value of about 1. Such a solution will damage concrete very rapidly. Acidic waters having pH values of 5 to 6 will also damage concrete, but only after long exposure.

It is very easy to detect concrete that has been damaged by acids. The acid reacts with the Portland cement mortar matrix of concrete and converts the cement into calcium salts that slough off or are washed away by flowing waters. The coarse aggregate is usually undamaged but left exposed. The appearance of acid-damaged concrete is somewhat like that of abrasion damage, but the exposure of the coarse aggregate is more pronounced and does not appear polished. Figure 63 shows the typical appearance of concrete that has been damaged by acid exposure. Acid damage begins, and is most pronounced, on the exposed surface of concrete, but it can extend into the concrete past the surface. The acid is most concentrated at the surface. As it sits on the concrete surface or penetrates into it, the acid is neutralized by reaction with the paste. If the acid is in flowing water, the damage can progress quickly as the damaged materials are washed away and fresh acid is exposed to the concrete. Preparation of acid-damaged concrete, therefore, may involve removal of more concrete than would otherwise be expected. Failure to remove all the concrete affected and weakened by the acid will result in bond failure of the repair material.

As with all causes of damage to concrete, it is generally necessary to remove the source of damage prior to repair. The most common technique used with acid damage is to dilute the acid with water. Low pH acid solutions can be converted to higher pH solutions having far less potential for damage in this manner.

Alternately, if the pH of the acid solution is relatively high, coatings can be applied over repair materials to prevent the acid from redamaging the surfaces. Laboratory tests have revealed very few economical coatings that are capable of protecting repair materials from low pH solutions.

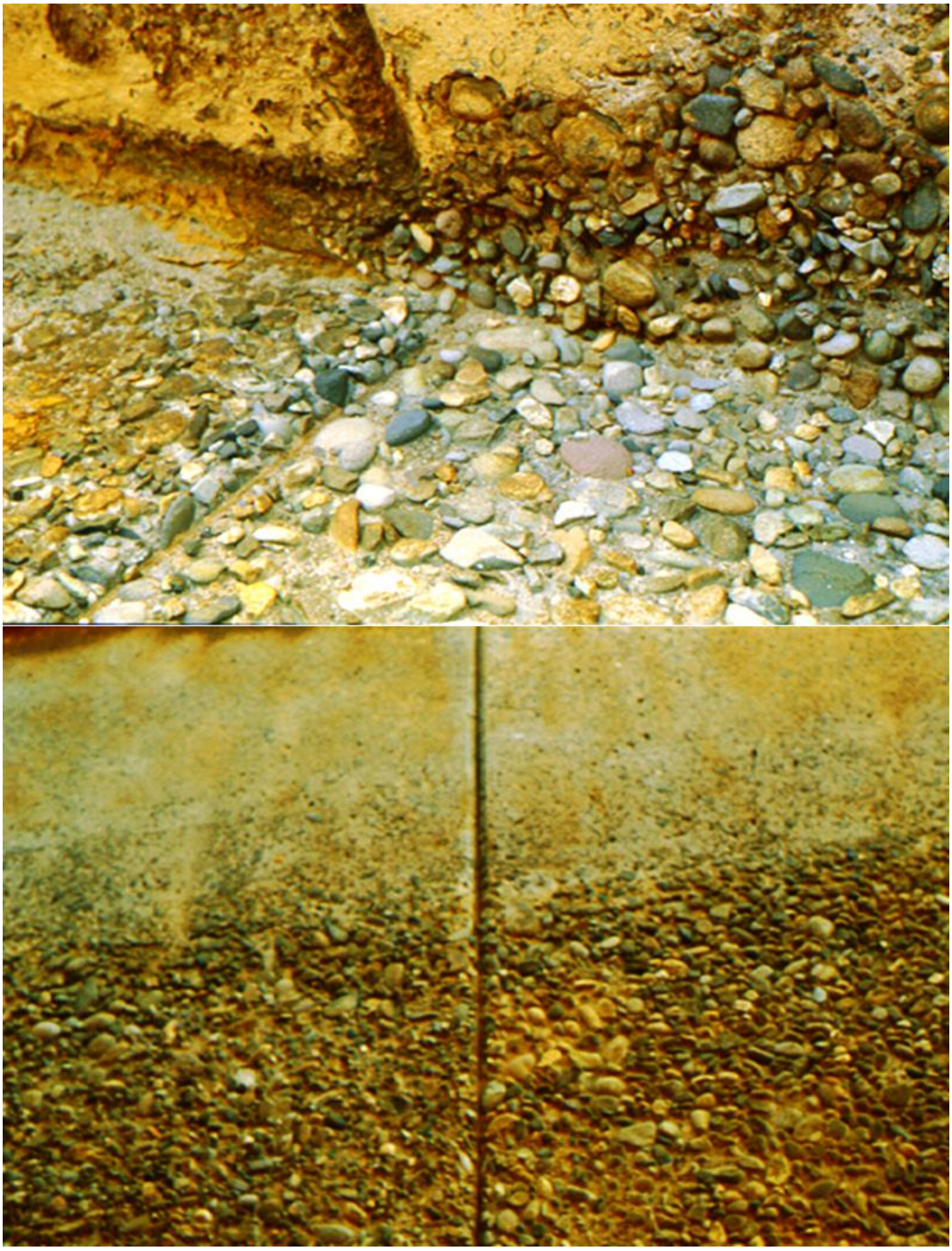

Figure 63. Examples of acid exposure on concrete.

Repairs to acid-damaged concrete can be made using replacement concrete (section D.3.a.), and polymer concrete (section D.2.d.). Polymer concrete and epoxy mortar, which do not contain Portland cement, offer the most resistance to acid exposure conditions. In addition, there are non-Portland cement based repair mortars (section D.2.f.) that can be proportioned to make them acid resistant.

Acid washes were once permitted as a method of cleaning concrete surfaces in preparation for repairs. Reclamation has learned, however, that bond failures would occur unless extensive efforts were made to remove all traces of acid from the concrete. Reclamation specifications no longer permit the use of acid washes to prepare concrete for repair or to clean cracks subject to resin injection repairs.

Finally, it should be mentioned that damage from pure water can look like acid attack. This type of damage usually occurs at higher elevations where the water is very pure. The pure water has a high affinity for minerals in the concrete and can dissolve concrete surfaces with which it comes in contact.

11. Cracking

There are many types of cracks in concrete. Figure 64 (Concrete Society, 1992) shows many of them. While cracking is sometimes a cause of damage, it is usually a result of some type of deterioration mechanism or damage. Many times, once the concrete has cracked, other forms of deterioration can occur or accelerate.

As discussed earlier, ASR, freeze-thaw, and sulfate attack can cause cracking. Improperly proportioned or placed concrete can settle around the reinforcing steel as it cures, resulting in plastic settlement cracks (figure 65).

All Portland cement concrete undergoes some degree of shrinkage during hydration and curing. This shrinkage can be comprised of several components, including thermal shrinkage, plastic shrinkage, drying shrinkage, and autogenous shrinkage. Many concrete practitioners believe that reinforcing steel will prevent shrinkage and thermal cracking. However, the steel will not entirely prevent cracking, although it will certainly influence cracking size and location. Drying shrinkage is best known because of its prevalence and negative effects on durability as a result of the numerous cracks it can produce (figure 66). In the case of drying shrinkage, water is usually lost by evaporation after the concrete hardens. The loss can also occur when underlying dry concrete or soil dries the concrete. In some cases, depending on exposure conditions, drying shrinkage cracks can be small (crazing) and may not need repair.

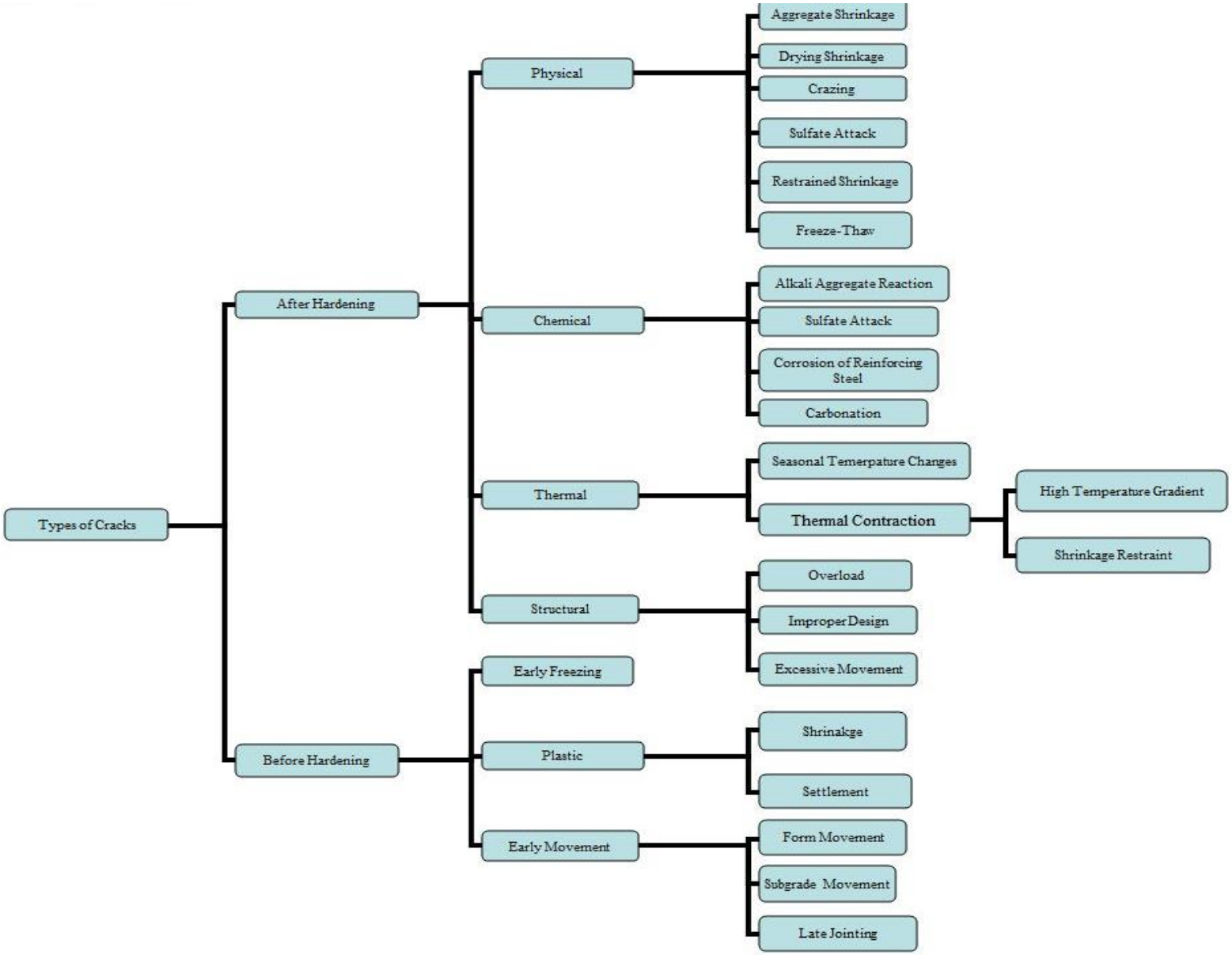

Figure 64. There are many types of cracks that can affect concrete structures.

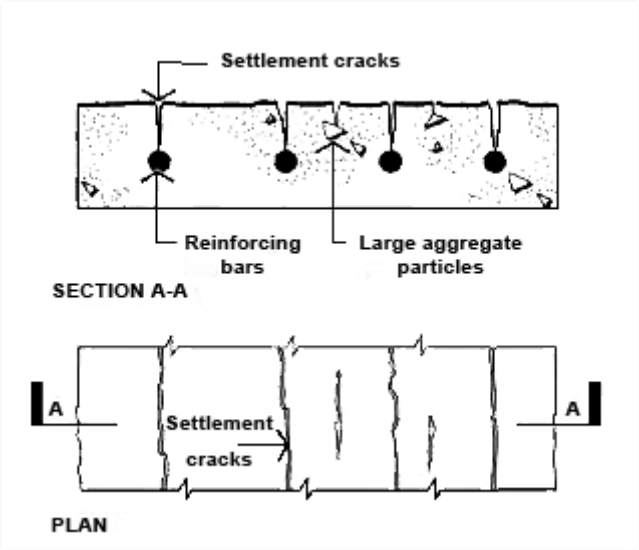

Figure 65. Plastic settlement cracking.

Figure 66. Excessive drying shrinkage cracking due to loss of water from the concrete after hardening.

Plastic shrinkage cracking occurs when the fresh concrete is exposed to conditions that result in high rates of evaporation from the concrete surface (wind, moderate to high temperatures, and low humidity). The resultant shrinkage, due to the water loss, causes cracking while the concrete is still plastic (figure 67). Plastic shrinkage cracks can be deeper than drying shrinkage cracks. They typically exhibit numerous short cracks that are parallel to each other and can lead to accelerated deterioration. In some conditions, plastic shrinkage cracking can be repaired during finishing operations by working the fresh concrete until the cracks close. This should be done without adding water to the concrete surface.

Thermal cracking can result from excessive concrete heating during curing and subsequent rapid cooling, or by the normal expansion and contraction of concrete during changes in ambient temperature if joints are not properly placed. Concrete has a linear coefficient of thermal expansion of about 5.5 millionths inch per inch per degree Fahrenheit (°F). This can cause concrete to undergo length changes of about 0.5 inch per 100 linear feet for an 80 °F temperature change. If joints to accommodate this length change are not provided in the design, the concrete will simply crack and provide joints where needed. This type of cracking will normally extend entirely through the member and create a source of leakage in water retaining structures. Thermal cracking can also result from heat generation during curing

and subsequent cooling. During curing, the cement hydrates and generates heat. The concrete can harden while at elevated temperatures, and subsequent contraction of exposed surfaces upon rapid cooling can lead to internal tensile stresses and cracking.

Figure 67. Plastic shrinkage cracking in concrete placed in hot, dry weather.

Inadequate foundation support is another common cause of cracking in concrete structures. The tensile strength of concrete is usually only about 200 to 400 psi. Foundation settlement can easily create displacement conditions where the tensile strength of concrete is exceeded, leading to cracking (figure 68).

Because of the challenges related to repairing cracks, monitoring crack movement prior to attempting repair (figure 69) is usually justified. Traditional methods to monitor movements involved the use of manual or electronic gauges. Newer technology can capture very accurate movement data using digital images from cameras or smart phones (figure 70), as well as special photogrammetric software. To use this method, digital images of the joint or crack need to be captured periodically (Klein, 2014).

Movement should be monitored for extended periods of time to determine if the cracks are simply opening and closing as a result of daily or seasonal temperature changes, or if there is a continued or progressive widening of the cracks resulting from foundation or load conditions. Repairs should be attempted only after the cause and behavior of the cracking are understood.

Figure 68. Foundation settlement in this water treatment plant caused cracking in one of the water bays.

Figure 69. A dial gauge used to monitor crack movement.

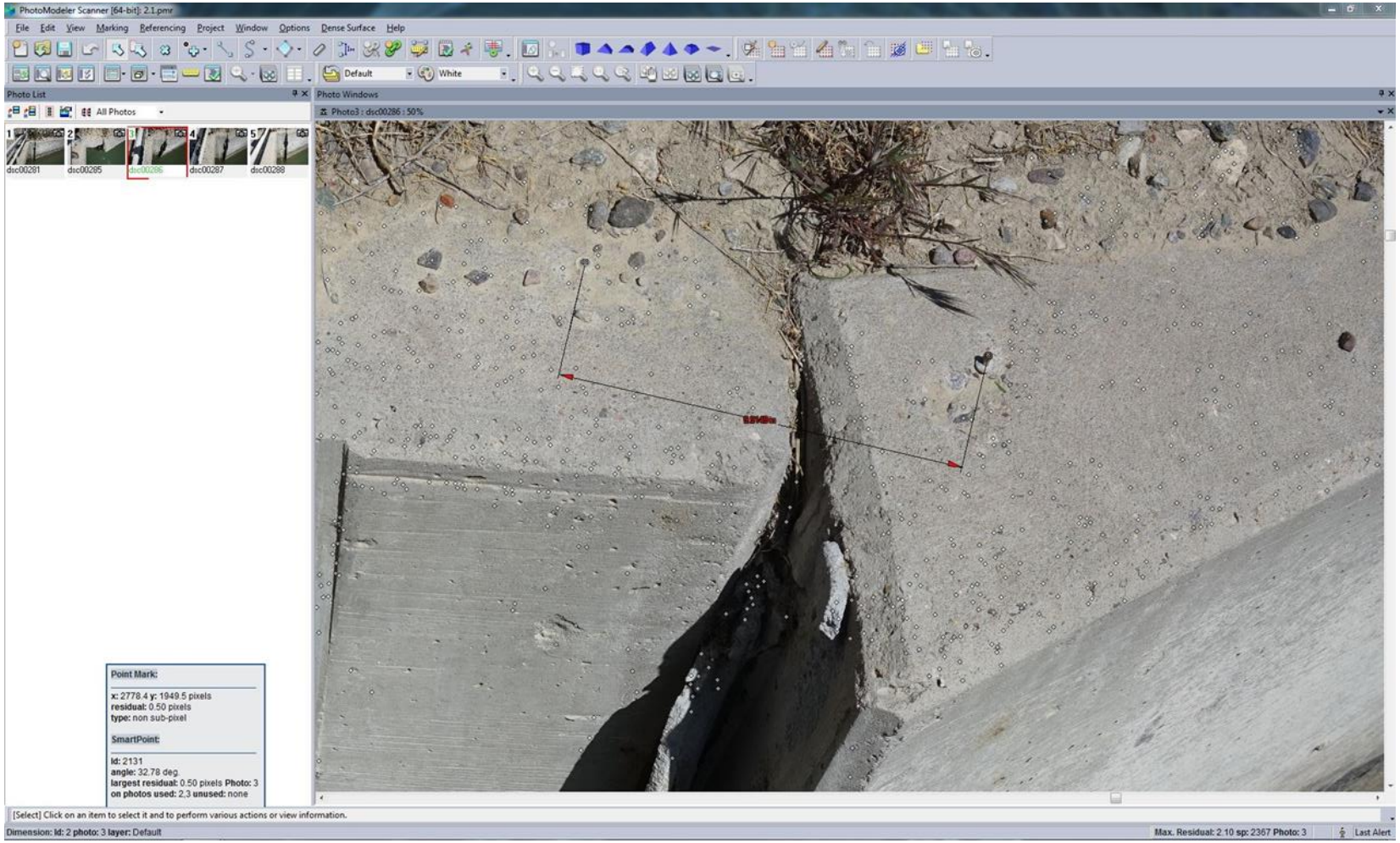

Figure 70. Photogrammetric techniques can be used to measure movement of cracks and joints by using data from digital photographs.

The role of concrete cracking related to corrosion of rebar is not always clear. Studies have shown that cracks less than approximately 0.3 millimeter (0.012 inch) wide have little influence on the corrosion of reinforcing steel (Atimay and Ferguson, 1974). However, other research (Darwin et al., 1985) (Oesterle, 1997) has shown that corrosion is not clearly correlated with surface crack widths, perhaps because there is poor correlation between surface crack openings and crack widths near rebar. ACI 222R-01 (ACI 222R-01, 2010) states, "Cracks that follow the line of a reinforcing bar (as might be the case with a settlement crack) are much more damaging because the corroded length of the bar is greater and the resistance of the concrete to spalling is reduced." ACI 318 (ACI 318, 2013) states that although a number of studies have been conducted, clear experimental evidence is not available to show how wide a crack can become before corrosion danger exists. Exposure tests indicate that concrete quality, adequate consolidation, and proper concrete cover may be of greater importance for corrosion protection than crack width at the concrete surface.

Other investigations show no relationship between crack width and corrosion (Beeby, 1978a) (Tremper, 1947) (Martin and Schiessel, 1969) (Raphael and Shalon, 1971). One study (Beeby, 1978b) showed that closely spaced cracks can actually cause greater corrosion rates than with more widely spaced, wider cracks. A detailed discussion relating to cracking is available in ACI 224 (ACI 224, 2013).

It is often very difficult to attain successful repair of cracks. The type of repair that is required depends, to a great extent, on the type and nature of the cracks. For many crack repairs, it is necessary to determine if the cracks are "live" or "static." If the cracks are cyclically opening and closing, or progressively widening, structural repair becomes very complicated and may require adding reinforcement to correct. If the cracks are moving or changing, there are several nonstructural repair options. It is better to leave most types of concrete cracking unrepaired than to perform inadequate or improper repairs (figures 71 and 72). The selection of methods for repairing cracked concrete depends on the cause of the cracking. If improper methods are used, cracks will usually reoccur in the repair material or adjacent concrete, and it may make the initial damage worse.

For some cracks, epoxy or polyurethane resin injection (section D.4.a.) can be used. Epoxy resin would typically be used to structurally rebond the concrete. If the objective of the repair is to seal water leakage, rather than to accomplish structural rebonding, the cracks or joints can be injected with polyurethane or similar resins. Epoxy resin injection can sometimes be used to seal low volume water leakage, while structurally rebonding cracked concrete members. Epoxy resins cure to form hard, brittle materials that will not withstand movement of the injected cracks. Polyurethane resins cure to a flexible, low tensile strength, closed cell foam that is effective in sealing water leakage; however, it cannot normally be used for structural rebonding. These flexible foams can experience 300- to 400-percent elongation, due to crack movement. Some two component

polyurethane resin systems cure to form flexible solids that may be useful for structural rebonding. For more detailed information, see MERL 2013-58, *Guide to Chemical Grouting of Joints and Cracks in Concrete* (Joy, 2013).

Figure 71. An example of improper crack repair, resulting in an unsightly appearance.

Figure 72. Improperly repairing cracks often makes the repair very short lived.

For other cracks, surface sealing and coatings may be appropriate (section D.1). These methods are typically used when numerous smaller cracks exist that would be difficult to repair using injection methods.

Many times, damaged concrete can contain cracks that are not related to the primary cause of damage (section C.13). If the depth of removal of the damaged or deteriorated concrete does not extend below the depth and extent of the existing cracks, then the existing crack will likely reflect into and through the new repair materials. Reflective cracking is common in bonded overlay repairs to bridge decks, spillways, and canal linings (figure 73). If reflective cracking is intolerable, special steps must be taken, which may include preventing bond in the area of the crack, adding additional reinforcement in the repair material over the crack, or creating additional joints in the repair material to match the existing cracks. As a last resort, it may be appropriate to let the reflective cracking occur, then repair the cracks.

Figure 73. Reflective cracking from cracks below the concrete overlay.

Finally, restrained shrinkage cracking of concrete repair materials is a common problem with overlays and patches. The term restrained shrinkage comes from the fact that the repair material is restrained from shrinking by the bond to the underlying concrete. Restraint from bond development can occur faster than the increase in tensile strength of the repair material. As a result, as the repair material cures and shrinks, it is likely to crack much more than if it was unrestrained. Many times, these cracks are small and may not significantly impact the life of the repair. In other cases, the cracks can potentially shorten the

repair service life. In almost all cases, they are unsightly and may raise concern about the durability of the repairs. The only way to reduce or prevent them is to use low shrinkage repair materials, usually proportioned with shrinkage reducing additives (von Fay K., 2011). A USACE study to develop performance criteria for concrete repair materials proposed the classification listed below for drying shrinkage (figure 74) (Emmons and Vaysburd, 1995). Using low to very low magnitude shrinkage materials should always be a high priority.

Magnitude (%)	Classification
< 0.025	Very low
0.025 to 0.05	Low
0.05 to 0.10	Moderate
> 0.10	High

Figure 74. Classification system for drying shrinkage values.

12. Structural Overloads

Concrete damage caused by structural overloading is usually very obvious and easy to detect. Frequently, the event causing the overload is known and is a matter of record (figure 75). The stresses created by overloads result in distinctive patterns of cracking that indicate the source and cause of excessive loading and the point(s) of loading. Normally, structural overloads are one-time events and, once defined, the resulting damage can be repaired with the expectation that the cause of the damage will not reoccur to create damage in the repaired concrete.

Usually, the assistance of a knowledgeable structural engineer will be required to perform the analysis needed to fully define and evaluate the full consequences of most structural overloads, as well as to assist in determining the extent of repair required. This analysis should include determination of the loads the structure was designed to carry and the extent to which the overload exceeded design capacity. A thorough inspection of the damaged concrete should be performed to determine the entire effect of the overload on the structure. The inspection should also look for any secondary damage that might have occurred. Care should be taken to ensure that some other cause of damage did not first weaken the concrete and make it incapable of carrying the design loads. If the overload caused yielding of the reinforcing steel, the steel will most likely need to be replaced. Thus, the need for repair and/or replacement of damaged reinforcing steel should be anticipated and included in the repair procedures.

Figure 75. Structural damage from a collapsed roadway that impacted a pier of a siphon. The road was undercut by flooding and then collapsed against the pier. Structural analysis indicated that the reinforcing steel was not yielded, so epoxy injection was used to repair the pier.

13. Multiple Causes of Damage

Multiple causes of damage should be suspected whenever damage or deterioration is discovered. It is fairly common to see multiple damage mechanisms with Reclamation's older structures.

Modern concrete (concrete constructed since about 1950) has the benefit of various admixtures and advanced concrete materials technology, and it should not be damaged by many of the causes listed in this section. If deterioration or damage has occurred, it is likely that modern practices were not followed during material selection, mixture proportioning, placement, or curing (figure 76).

Figure 76. Core from concrete placed in the 1960s. It has been damaged by alkali-silica reaction and freezing and thawing weather. Reactive aggregates were used in the concrete mixture.

Failure to recognize and mitigate all of the causes of damage will most likely result in poor repair serviceability. Figure 77 shows the results of multiple causes of damage (note the repair overlay that is also cracking). This concrete is suffering from AAR cracking that has also accelerated freeze-thaw deterioration of the surface. It is also being damaged by faulty design or construction techniques that located the electrical conduits too close to the exterior surface of the concrete and a walkway post spanning a joint.

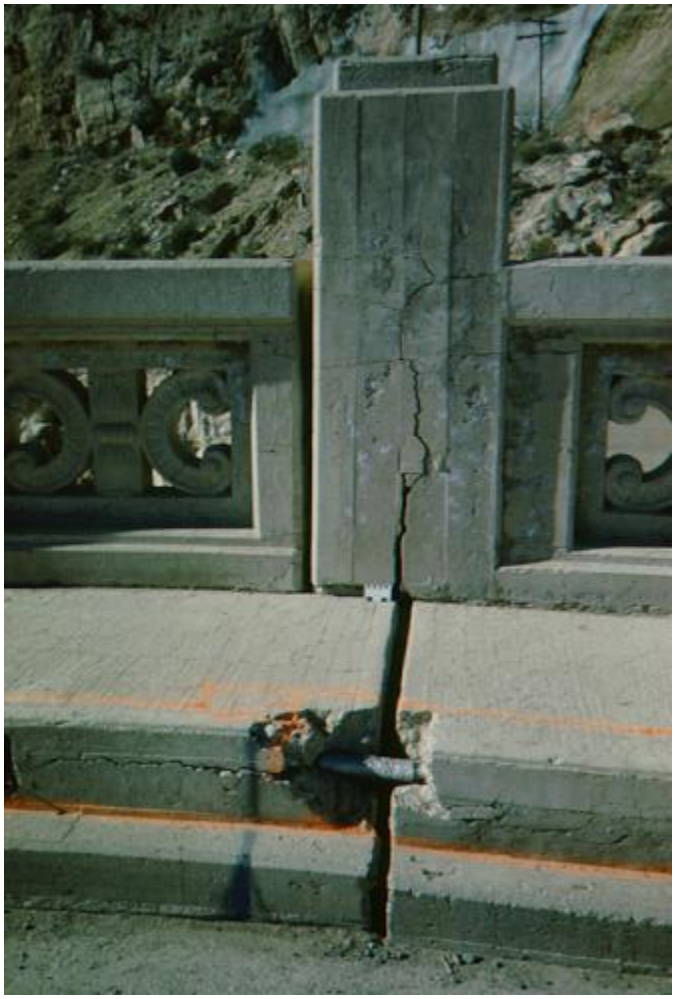

Figure 77. An example of multiple causes of damage. In this case, ASR, freeze-thaw, and conduits are too close to the surface of the concrete.

The proper use of air-entraining admixtures in modern concrete has greatly increased the resistance of concrete to freeze-thaw deterioration. However, freeze-thaw deterioration is often still blamed as the cause of damage to modern concrete. There are many factors that can interfere with the ability of air-entraining admixtures to properly protect the concrete. Mix records and aggregate quality test results may indicate that the concrete was poorly proportioned or that the available aggregate was of low quality. Construction inspection records may indicate that placing and finishing techniques were inadequate. Petrographic examination of the affected concrete may reveal that alkali-silica reaction, sulfate exposure, or steel corrosion have weakened the concrete and allowed freeze-thaw damage to occur. These findings might indicate that the problem is far more extensive than first thought, and that it requires more extensive preventative or corrective action than simple replacement of the deteriorated concrete. The use of excessive mix water, improper cement type, poor construction practices, improper mixture proportioning, dirty or low quality aggregate, and inadequate curing all contribute to low durability concrete.

Selection of the proper methods and materials for repair of concrete damaged by multiple causes depends on determining the primary and secondary (and perhaps other) deterioration mechanisms. Once the primary cause is fully understood, it is usually necessary to take preventative measures to protect the remaining original concrete from additional damage. The application of concrete sealing and coating compounds (section D.1) may prove useful. If no preventative measures are judged useable, repair of the damaged concrete can be made as discussed in previous sections; however, a short repair service life and the need for additional future repairs should be anticipated.

D. Standard Methods of Concrete Repair

This chapter describes standard methods of repairing and maintaining concrete. Generally, repairs can be thought of in four broad categories:

- Sealers and coatings, which can be used to protect concrete and to repair surface damage and small cracks (used frequently for maintenance)
- Thin repairs, which are less than about 2 inches thick and do not encompass any reinforcing steel
- Thick repairs, which typically extend behind at least one mat of reinforcing steel or are at least 6 inches thick
- Crack and water leak repairs

Thinking of repairs this way can be advantageous because it helps with the selection of an appropriate repair material and method. There will also be cases when there is an overlap between what would be considered a thin or thick repair in some applications (for example, when a polymer concrete [PC] repair, generally considered a thin repair, is made that encompasses rebar). In some repair applications, a combination of methods will be needed. For example, if there are cracks leaking water into a repair cavity, the cracks may need to be sealed using one of the crack sealing methods before the cavity is repaired. Lastly, shrinkage of repair mortars and concrete can be a significant issue for these materials (Vaysburd et al., 2014). Shrinkage can lead to cracking, which may reduce durability and weaken bond strength. As stated earlier, steps should be taken to select and/or proportion repair mortars that are as low shrinkage as possible (figure 74).

This chapter contains detailed discussions of each of the standard repair methods. Detailed guide specifications are contained in the latest revision of Reclamation's Guide to Concrete Repair, Part II - Standard Specifications for Repair and Maintenance of Concrete, M-47 for:

- Concrete removal, including hydrodemolition
- Concrete repair, including small and large repairs
- Concrete surface repair using polymer concrete (including epoxy mortar)
- Crack repair using epoxy injection
- Chemical grout to seal leaks

- Concrete crack healer and penetrating sealer
- Coating concrete

Specifications for concrete used for replacement concrete, shotcrete, silica fume concrete, and other forms of concrete that might be used for repair (for example, self-consolidating concrete) are covered in Reclamation's concrete and shotcrete guide specifications, which are also included in Part II. In addition, while preplaced aggregate concrete is a very effective repair method, it has rarely been used by Reclamation, especially over the last 20 years. If a repair using preplaced aggregate concrete is being considered, please contact staff in the Concrete, Geotechnical, and Structural Laboratory (CGSL) for assistance.

The provisions contained in this Guide should be closely followed during repair of Reclamation concrete. However, these "standard" methods and specifications may not apply to unusual concrete repair jobs. Assistance with unusual repair problems can be obtained by contacting CGSL personnel. In addition, all of the methods and materials discussed here have specific safety requirements for proper use. The user should always ensure that all appropriate safety protocols are followed.

1. Sealers and Coatings

Concrete sealing and coating compounds are applied to cured, dry concrete as a maintenance and repair procedure to reduce or prevent penetration of water, aggressive solutions, or gaseous media. They help to reduce or prevent associated deterioration such as corrosion of rebar, freeze-thaw, carbonation, or sulfate damage. These materials are not suitable for repairing badly damaged or deteriorated concrete, but they are suitable for sealing concrete surfaces and cracks in concrete that is in overall good condition. In many cases, small areas of damaged and deteriorated concrete can be repaired prior to application of one of these products. Linseed oil based treatment, which was generally misunderstood and often misused, is no longer recommended for use on Reclamation concrete.

Cracks in concrete are widely regarded as a long-term durability and maintenance problem because they increase the permeability of the concrete. Cracks can allow ingress of moisture and other compounds into concrete, leading to further deterioration. Cracking is a problem that occurs in most geographical locations and climates, and in many types of concrete structures. Reclamation has a large inventory of aging concrete that is experiencing deterioration resulting in cracking or exacerbated by cracking. Effective sealing and coating compounds for smaller cracks could slow or halt deterioration in some cases.

A variety of different membrane forming (paints or coatings) and surface penetrating chemicals are manufactured and sold as sealing compounds for concrete surfaces. Some of these materials provide very good protection to the

concrete for discrete periods of time (ACI 515, 2013). Other commercially available sealing materials, however, may consist of little more than mineral spirits and linseed oil. Such systems will, at best, do little harm to the concrete. Their application may, however, prevent subsequent treatment with sealing compounds that have proven more effective. For this reason, only products that have been proven effective in standardized laboratory evaluations should be used on Reclamation concrete.

There are three basic categories of protective surface treatment that can be performed on concrete. These treatment methods include:

(1) The concrete surface can be treated with a coating that essentially covers the surface. These surface treatments are typically polymeric materials such as epoxy, polyurethane or polyurea.

(2) The concrete surface can be protected by low viscosity crack sealers, which can fill surface voids and cracks. They can be applied by flooding the surface, spraying onto surfaces, or placing into cracks (figure 78). These surface treatments are typically low viscosity epoxies, high molecular weight methacrylates (HMWM), and urethanes. These products have been successfully used on cracks as small as 0.002 inch, by gravity feed, and as large as about 0.5 inch wide, as long as they are clean and dry. For large cracks, it may be possible to prefill the cracks with a gap-graded, clean, high quality sand. Best results are obtained when cracks are treated as soon as possible after they form. These products can also glue fine cracks together. If crack penetration is the primary goal, cracks will be more open during cooler seasons or during cooler parts of the day. Of course, this has to be balanced against the ambient and surface temperature requirements of the product being used. The viscosity of these products can change significantly with changing temperatures, becoming much thicker (higher viscosity) at lower temperatures.

(3) The concrete surface can be treated with surface sealers. Surface sealers saturate the concrete surface with a penetrating water repellant compound that leaves the pores and cracks open, but repels water on the treated concrete surface. These products do not rebond cracks. For small cracks, about 0.002 inch or smaller, these materials can seal cracks, if they are clean and dry. Two types of surface sealing treatments are frequently used in the concrete industry. One type is a silane or siloxane based water repellant (both are based on silicon technology). The other type is a sodium silicate solution. Both types of sealing treatments penetrate concrete pores and cracks, and react with hydrated cement particles. Silanes or siloxanes react to form a hydrophobic lining of the pores. The sodium silicates react to fill the pores and cracks with reactant products, and they function more as pore blockers. The effectiveness of these

silicates has been hard to quantify and, in some cases, the reaction may be damaging to concrete (Al-Otoom et al., 2007).

Figure 78. A low viscosity epoxy resin was poured into plastic shrinkage cracks. Although unsightly, the resin was effective in filling and sealing the cracks.

There are several concrete sealing technologies that would be effective for reducing water infiltration on Reclamation's structures. Depending on exposure conditions and anticipated use, silanes, siloxanes, HMWM, and low viscosity epoxies can be effective. For applications using silanes, the newer formulations of gels and creams seem to be the most effective at achieving deeper penetration (Jian-Guo Dai, 2010).

a. High Molecular Weight Methacrylic Sealing Compounds

One type of sealing compound that has proven effective in Reclamation laboratory tests and field applications is known as a high molecular weight methacrylic healer-sealer. This sealing compound is composed of a methacrylic monomer and appropriate polymerization "catalysts" that are very similar to some of the monomer systems used in polymer concrete (section D.2.d.). It is a very thin, amber colored liquid that is easily spread over horizontal concrete surfaces with brooms or squeegees. The liquid can penetrate the concrete surface to a depth of about 1/16 inch or less, but it is most effective in penetrating and sealing fine cracks in the concrete surface. This sealer will act like a membrane-forming

system if a thick coat is applied, or if two or more applications are made. The appearance of the concrete following application will be somewhat like a varnished or wet surface and may be splotchy in areas of high and low absorption. Cured sealer left on the surface of the concrete will be deteriorated by solar radiation within 1 to 2 years and will disappear. If the purpose of the application is to seal cracks, the loss of this surface material is immaterial because the sealer in the cracks is protected from solar radiation. The expected service life of properly applied methacrylic sealing compound under typical Western State climatic conditions is about 10 to 20 years. Reapplication is then necessary. Figure 79 shows application of HMWM sealing compound to the crest of a dam in central Wyoming.

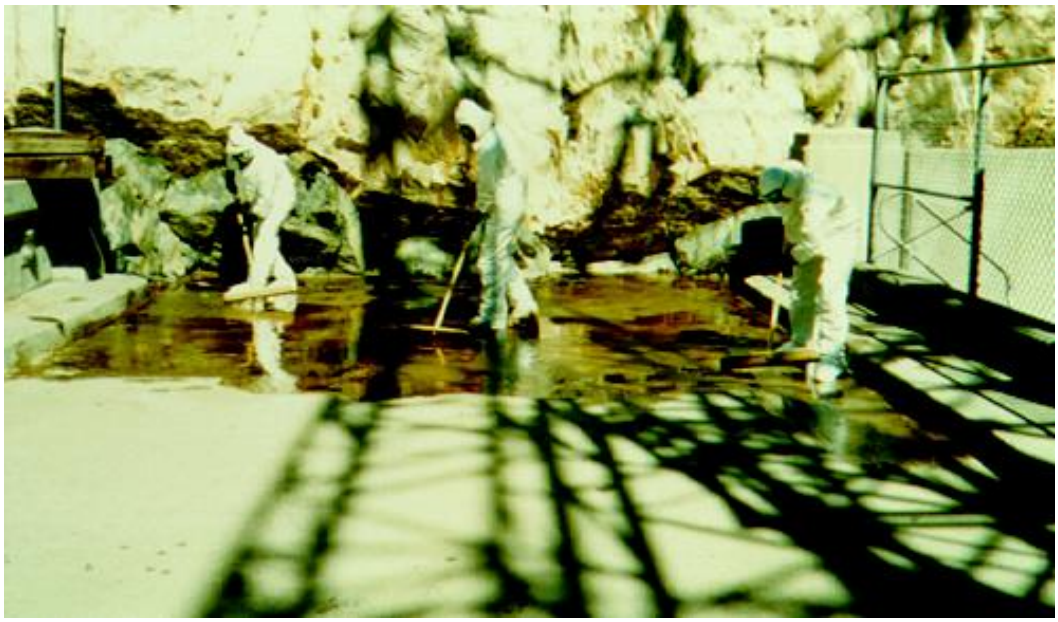

Figure 79. Application of HMWM to the top of a concrete dam.

(1) Preparation

Concrete to receive methacrylic sealing compound must be dry, clean, and sound. The cracks and pores of wet or damp concrete will be completely or partially filled with water, which will prevent the desired penetration of the sealing compound. In most cases, the concrete is suitably dry if no moisture appears under a sheet of transparent polyethylene taped to the concrete surface during a 2-hour exposure to full sunlight.

Proper surface preparation usually includes light sandblasting or steel shot blasting, power sweeping or hand brooming, and then blowing with oil-free, high-pressure air to remove all debris from the surface and within cracks. Dirt and debris in cracks will greatly limit penetration of the product. Very small

areas of paint, asphalt, rubber, or similar types of coatings can usually be ignored. It should be expected, however, that the methacrylic monomer system will attack and deteriorate most markings or coatings intentionally placed on the concrete. Deteriorated or unsound concrete should be removed by following the methods described in section B.5 and then be repaired (typically sections D.2.c. through D.2.f.) prior to applying the sealing compound. After proper preparation, the concrete must be protected from construction traffic and wetting.

(2) Materials

The HMWM sealing compound is usually obtained from the manufacturer as a three component system:

1. A thin liquid methacrylic monomer
2. Cuemene hydroperoxide initiator (or catalyst)
3. Cobalt napthenate promoter

Each manufacturer will specify the proper proportions for mixing these materials, and these instructions must be closely followed. As a general rule, it can be expected that the initiator will be added to the monomer at about 4 to 6 percent, by weight, and the promoter at about 1 to 3 percent, by weight. The initiator and promoter must never be directly mixed with each other because an extremely violent and explosive chemical reaction could result. Instead, the initiator should first be thoroughly mixed with the monomer, and then the promoter should be added and mixed with the monomer-initiator mixture.

Some manufacturers supply a two-part monomer system that already contains the proper proportion of promoter. With these systems, it is necessary to add only the proper quantity of initiator. Once all the components are mixed, the sealing compound system will have a definite and short pot life that cannot be extended under normal conditions.

(3) Application

The following information provides general guidelines, but specific products might have somewhat different requirements. With these systems, it is very important to closely follow manufacturer’s instructions. Surface and ambient temperature requirements must be met. Surfaces need to be clean and dry. The mixed system has a short pot life at normal ambient temperatures, so applicators should not mix more material than can be easily applied before the system becomes too thick (usually about 15 to 20 minutes). If the material is being applied by two workers, and the application path is clear and easily attained, mixing up to 5-gallon quantities of material is typical, unless the ambient temperature is high. The sealant should be applied immediately after mixing.

Applying the sealant to concrete in direct sunlight may cause rapid curing. Squeegees, industrial size paint rollers, push brooms, brushes, and airless spray systems can be used to apply the sealant. If a specific thickness of resin is desired for later application of sand, tined squeegees can be used. The goal is to flood the concrete with a heavy, uniform coverage without leaving puddles of excess material. It may be appropriate to push puddles of the material back and forth over the surface to help it penetrate into areas of higher permeability. Vertical surfaces should receive two or more brushed, sprayed, or rolled applications. Repeat applications should be made immediately without waiting for the sealant to cure.

If a skid-resistant surface is required for foot or vehicular traffic, or if protection from solar radiation is desired, sand must be broadcast over the liquid sealant system within 15 to 20 minutes of application. The sand is usually broadcast to refusal (which means that the sand layer is thick enough so that the top of the sand layer is not in contact with the resin), then excess sand is removed after curing. In some cases, this can be done two or more times to build up the thickness.

(4) Curing and Protection

After application, the treated surfaces should be protected for a minimum of 24 hours. Protection should be provided for 48 to 72 hours if ambient temperatures are lower than 50 °F to allow the sealant to fully cure. Sealant applied at night will be quickly cured by solar radiation heating the following morning. Night applications allow for maximum penetration into cracked surfaces and should be pursued whenever feasible.

b. Low Viscosity Epoxy Sealing Compounds

Another type of sealing compound that is being used more and has proven effective in Reclamation laboratory tests and field applications is low viscosity epoxy sealing compounds. They can be somewhat easier and safer to use than HMWM, with more flexibility in cure times. However, they tend to have a higher viscosity than HMWM, so they may not penetrate fine cracks as effectively.

This sealing compound is composed of an epoxy resin and an appropriate catalyst or hardener. These types of epoxies are specifically formulated to be very low viscosity to penetrate fine cracks in concrete. They are easily spread over horizontal concrete surfaces with brooms or squeegees. The use and performance of this sealer is very similar to an HMWM. It can penetrate the concrete surface to a depth of about 1/16 inch or less, but it is most effective in penetrating and sealing cracks in the surface. It will also act like a membrane-forming system if two or more applications are made. The appearance of the concrete following application will be somewhat like a varnished or wet surface and may be splotchy

in areas of high and low absorption. Cured sealer left on the surface of the concrete will be deteriorated by solar radiation within 1 to 2 years. If the purpose of the application is to seal cracks, the loss of the surface material is of no consequence because the sealer in the cracks is protected from solar radiation. The expected service life of properly applied epoxy sealing compound under typical Western State climatic conditions is about 10 to 20 years. Reapplication is necessary thereafter. Figure 80 shows application of an epoxy sealing compound to the concrete deck of a southern Colorado pumping plant.

Figure 80. Application of an epoxy sealer to a pumping plant deck.

(1) Preparation

Concrete that will receive an epoxy sealing compound must be dry, clean, and sound. The cracks and pores of wet or damp concrete will be completely or partially filled with water that will prevent the desired penetration of the sealing compound. The concrete is suitably dry if no moisture appears under a sheet of transparent polyethylene taped to the concrete surface during a 2-hour exposure to full sunlight.

Proper surface preparation usually includes light sandblasting or steel shot blasting (figure 81), power sweeping, or hand brooming, which is followed by

blowing with oil-free, high-pressure compressed air to remove all debris from the surface. Removing dirt and debris from cracks will improve penetration of the resin. Very small areas of paint, asphalt, rubber, or similar type coatings can usually be ignored. Deteriorated or unsound concrete should be removed following the methods described in section B.5 and repaired (typically sections D.2.c. through D\.2.f) prior to sealing. After proper preparation, the concrete must be protected from construction traffic and moisture.

Figure 81. Steel shotblasting a concrete deck prior to application of an epoxy sealer.

(2) Materials

The epoxy sealing compound is a two-component epoxy system: the epoxy resin and a hardener. When selecting epoxy products for sealing concrete, ensure they are expressly manufactured for that purpose. Select low viscosity products that are made for the expected service conditions. For assistance selecting products, contact CGSL staff.

Each manufacturer will specify the proper methods and proportions for mixing these materials, and those recommendations must be closely followed.

(3) Application

Prior to mixing, the components must be conditioned to the proper temperatures. Ambient and surface temperatures must meet the manufacturer's requirements. It is important to avoid mixing more material than can be easily applied before the system becomes too thick— normally within 15 minutes to 1 hour. The epoxy should be applied immediately after mixing. Applicators can use squeegees, industrial-sized paint rollers, push brooms, brushes, and airless spray systems to apply the epoxy. The area being sealed should be flooded with a heavy, uniform coverage without leaving puddles of excess material. If a specific thickness of resin is desired for later application of sand, tined squeegees can be used. Prefilling larger cracks may be necessary. It may be appropriate to push puddles of the material back and forth over the surface to help it penetrate into cracks and areas of higher permeability. Vertical surfaces should receive two or more brushed, sprayed, or rolled applications. Back brushing after spraying may help the material soak into vertical surfaces.

If a thicker overlay, a skid-resistant surface, or protection from solar radiation is desired, sand should be broadcast over the epoxy system while it is still tacky. The sand is usually broadcast to refusal (which means that the thickness prevents the top layer from contacting the resin), and then excess sand is removed after curing. In some cases, this can be done two or more times to build up the thickness.

(4) Curing and Protection

After application, protect the treated surfaces until cured. Protection times will vary depending on the specific product and exposure conditions.

c. Silane and Siloxane Sealing Compound

Silanes and related products have been receiving attention because of their effectiveness and ease of use. They have been used to seal concrete surfaces and cracks smaller than about 0.002 inch wide. They are effective in reducing water penetration into treated concrete (Aitken and Litvin, 1989) (Attanayaka et al., 2002), provided that the sealing compound contains a minimum of 20-percent solids and as long as the cracks are not too large (greater than about 0.01 inch). For larger cracks, application of a silane/siloxane and an epoxy or HMWM sealer has worked well.

The silane and siloxane solids are suspended in a carrier such as water, alcohol, or mineral spirits that evaporates from the concrete following application. Solvent-based sealers seem to work better than water-based sealers, and, as

mentioned earlier, the newer gel and cream formulations have been shown to work very well. Since the molecules are slightly larger for siloxanes than for silanes, they can work well in older, more porous concrete. Silanes will generally penetrate to a deeper level. Silanes need a high pH to cure properly, while siloxanes do not.

Use of these sealing compounds does not significantly change in the appearance of the treated concrete, except that the darkening normally associated with wetting of concrete does not occur. When the surfaces get wet, the water usually forms beads. These sealing compounds will not provide protection to concrete that is completely inundated in water, except for short periods. They should not be used under conditions that involve prolonged inundation, which occurs with stilling basins, canal floors, or spillway floors, unless there are significantly long dry periods between inundations, and it is acceptable to reapply the sealing compound following inundation. They are best used to protect concrete from rain, snowmelt, and water splash.

These materials have a relatively limited service life, and reapplication should be scheduled about every 5 to 7 years for optimum protection. Application of these materials, however, proceeds very quickly on horizontal and vertical concrete surfaces. Two workers can be expected to treat 10,000 to 15,000 square feet of horizontal surface in 1 day.

(1) Preparation

Concrete surfaces to be treated with a silane or siloxane sealing compound should be dry, clean, and sound. Any material that will block absorption of the sealing compound in the concrete should be removed. For new concrete that will be treated, planning is needed to ensure that proper curing occurs without using difficult to remove curing compounds. All deteriorated concrete should be removed (section B.5), and all needed repairs should be accomplished prior to application. As a general rule, power sweeping and, in some instances, high-pressure (less than 8,000 psi) water washing or shot blasting of surfaces will be sufficient. The concrete should be allowed to dry for 24 to 48 hours following wetting. Cracks in the concrete should be cleaned and blown out with compressed air to remove any debris. Once preparation (including drying if needed) is completed, the sealing compound should be applied within 24 hours.

(2) Materials

These sealing compounds should be one-part, ready to apply, and contain no less than 20-percent active solids. Sealing compounds that contain less than

20-percent active solids do not provide sufficient protection to the concrete and are not recommended. The material should be supplied in 5-gallon pails or 55-gallon drums. No additional mixing or blending should be necessary prior to application. No additional solvents or diluents should be added to the supplied sealing compound.

(3) Application

Manufacturer's application guidelines should always be followed. The following are general guidelines that may not always correspond exactly to a specific manufacturer's recommendations. The sealing compound should be applied to the concrete using squeegees, push brooms, paint rollers (figure 82), or low-pressure airless spray equipment. Adjacent glass, metal, and painted surfaces must be protected from the sealing compound. Overspray protection must be provided if spray application equipment is used. Fine spray mists can travel extensively and damage downwind structures, equipment, and automobiles.

Figure 82. Application of a siloxane sealing compound.

Follow the manufacturer's recommendations for application rate and allowable time between coats. Two coats of 20-percent solids material provide about the same protection as one coat of 40-percent solids. Excess sealant should be

broomed or rolled out until it is absorbed by the concrete. Low density areas of the concrete surface need the most protection, and these areas are the most absorptive.

(4) Curing

Treated concrete must be protected from foot and vehicular traffic, and water wetting, for 24 hours following application. Should the concrete experience rain or heavy water splashing during this period, repeat drying and apply additional material.

d. Coating Compounds for Concrete

The reasons for coating concrete typically fall into one of four categories.

1. Waterproofing is typically used to prevent the flow of water into or out of concrete. Positive side (the side exposed to water) waterproofing is recommended to produce a dry surface for the application of coatings on the opposite side of a structure. However, waterproofing systems can be designed for either negative or positive side installation. Waterproofing coatings are generally thicker film asphalts, urethanes, or epoxies, and they can be spray applied or installed in layup sheets.

2. Dampproofing is used to seal the porosity of concrete and prevent absorption of water. Dampproofing systems are generally thin film asphaltic emulsions and are not usually effective against hydrostatic pressure. A common use of dampproofing is to seal concrete and masonry structures to prevent water absorption and prevent freeze-thaw damage.

3. Decorative coatings change the appearance of concrete and masonry to enhance aesthetics. Decorative coatings and sealers can be used to obtain a specific color or texture, to increase stain resistance, and to make it easier to clean and maintain an acceptable appearance.

4. Barrier coatings are installed over concrete and masonry when conditions require the concrete and masonry to be isolated from its service environment. This is usually necessary to either protect the concrete and masonry from exposure to chemicals or to protect a product from being contaminated by direct contact with the concrete or masonry.

While the success of any coating applied to a concrete surface is largely dependent upon the thoroughness of the surface preparation, coating material selection and application are equally critical. Some examples of coating materials that are compatible with concrete are epoxies, acrylics, polyurethanes, polyureas (figure 83), vinyl esters, chlorinated rubbers, and elastomeric coatings. Many concrete coatings are not able to properly bridge cracks in concrete, so careful selection of surface coatings should be made when coating concrete that contains cracks.

For more information about coating concrete, refer to Reclamation's Guide to Coating Concrete (Pepin, 2015).

Figure 83. Cracked concrete canal lining repaired with an elastomeric polyurea.

(1) Preparation

Proper surface preparation includes the following:

- Inspection of the concrete substrate
- Removal and replacement of nondurable concrete
- Decontamination of concrete and masonry surfaces
- Creation of a surface profile
- Repair of surface irregularities

Inspection of the concrete substrate is critical to determine its general condition and soundness, whether contaminants or moisture vapor emissions are present, and to determine the best methods for preparing the surface to meet the job requirements. A proper evaluation will result in selection of the proper tools and equipment to accomplish the objective.

Removal and replacement of nondurable concrete must be accomplished prior to installation of the coatings. Localized weak or deteriorated concrete must be removed from sound concrete and replaced. Repair of surface damage, including spalls, cracks, deteriorated joints, and other damage, should be performed prior to the placement of the coatings, according the appropriate sections of this Guide. Only specialized coatings in certain conditions can bridge large or moving cracks, so most coatings should not be expected to repair cracks.

Decontamination and cleaning of the concrete surface requires the removal of oils, grease, wax, fatty acids, and other contaminants. This may be accomplished by using detergent scrubbing with a cleaner and degreaser, low-pressure water cleaning (less than 5,000 psi), steam cleaning, or chemical cleaning. The success of these methods depends on how deeply the contaminant has penetrated. In areas where the contaminants cannot be removed, the contaminated concrete must be removed and replaced.

For many coating compounds, a surface profile in the concrete needs to be created to provide for adhesion of the coating. The surface profile is the measure of the average distance from the peaks of the surface to the valleys, as seen through a cross-sectional view of the surface of the concrete. This dimension is defined pictorially and through physical samples in ICRI 310.2R (ICRI 310.2R, 2014) and is expressed as a Concrete Surface Profile (CSP) number (CSP 1-10). The creation of a surface profile can be accomplished by a number of methods, each using a selection of tools, equipment, and materials to accomplish the intended purpose.

The preferred methods for creating a surface profile, including the removal of dirt, dust, laitance, and curing compounds, is steel shot blasting (figures 25 and 81), abrasive (sand) blasting (figure 26), and scarifying. Chemical (acid) etching is generally not allowed to create a surface profile and is only allowed for concrete coatings when required by the coating manufacturer. If acid etching is used, extra care is needed to ensure all acid is removed before applying the coating. Vertical and overhead surfaces should be prepared using methods of grinding, scarifying, abrasive (sand) blasting, needle scaling, high-pressure water jetting (5,000 to 45,000 psi), or vertical steel shot blasting.

Surfaces to receive coatings must be inspected after the surface is prepared to ensure that the substrate is sound and structurally durable. Areas found to be

unsound or nondurable must be removed and replaced. Dust or other deleterious substances not removed after the initial surface preparation must be vacuumed, leaving the surface clean and free of dust.

Surface preparation selection is dependent on the type of surface to be prepared and the type of system to be installed. In addition, floors, walls, ceilings, trenches, tanks, and sumps each have their own particular requirements. The type and thickness of the selected coating also play an important role in the selection process. Regardless of the method selected or tools employed, a surface that will accept the application of polymer-based products and allow the mechanical bond of the polymer securely to the concrete must be provided. The type of service to which the structure will be subjected will also help to define the degree of profile required.

- Thin film linings up to 20 mils dry film thickness (dft) need a surface profile of CSP 2 to 3, typically accomplished through decontamination and cleaning of the concrete surface, followed by grinding or light shot blast.

- Medium film linings and flexible coatings up to 40 mils dft need a surface profile of CSP 3 to 5, typically accomplished through decontamination of the concrete surface, followed by light shot blasting, light scarification, or medium shot blasting.

- Laminate linings and self-leveling mortar coatings need a surface profile of CSP 4 to 6, typically accomplished through decontamination and cleaning of the concrete, followed by light scarification, medium shot blasting, or medium scarification.

- Mortar coatings and mortar laminates need a surface profile of CSP 5 to 9, typically accomplished through decontamination and cleaning of the concrete, followed by medium shot blasting, medium scarification, heavy abrasive blasting, or heavy scarification.

(2) Application

Manufacturer application guidelines should always be followed. The following are general guidelines that may not always correspond exactly to a specific manufacturer’s recommendations. The coating compound can be applied to the concrete using squeegees, push brooms, paint rollers, or airless spray equipment. Some coatings will require specialized equipment and certified personnel. Adjacent glass, metal, and painted surfaces must be protected from the coating compound. Overspray protection must be provided if spray application

equipment is used. Fine spray mists can travel extensively and damage downwind structures, equipment, and automobiles.

(3) Curing

Manufacturer's curing requirements should be followed. Different materials will have different curing requirements, and exposure conditions will impact curing time.

2. Thin Repairs

Thin repairs are generally from about ¼- to about 2 inches deep and do not encompass any existing reinforcing steel. Typical examples of thin repairs include surface grinding, Portland cement mortar, some coatings and surface sealers, dry pack mortar, packaged cementitious and chemical repair mortars, and polymer mortars (including epoxy mortars).

Unfortunately, insufficiently thick repairs to some concretes should not be considered permanent. In some circumstances, thin repairs my lead to accelerating deterioration behind or adjacent to the repair. A few examples that show where this can occur are:

- New concrete placed over old concrete subject to freeze-thaw deterioration. Because of the lower porosity of the new concrete, moisture can be trapped behind the repair material, increasing the moisture content beneath the repair, and accelerating freeze-thaw deterioration in the original concrete. This can lead to debonding of the repair material (figure 84).

- New concrete placed over concrete susceptible to alkali-silica reaction. The new concrete may contribute some alkalies to the existing concrete at the interface between the new and old concrete, and increase the moisture content in the existing concrete, which could accelerate deterioration due to ASR in the original concrete near the repair.

- New concrete covering rebar that extends into old concrete. In some cases, corrosion of the rebar occurs around the perimeter of the repair due to the ring or halo effect, which is caused by a conductor (the rebar) connecting concrete that has different electrical potentials (typically resulting from different pH, permeability, and/or different chloride ion contents).

Figure 84. Insufficiently thick repairs on a spillway wall made with concrete subject to freeze-thaw deterioration resulted in failure of the repair and additional damage to the surrounding concrete.

a. Surface Grinding

Surface grinding can be used to repair some bulges, offsets, and other irregularities that exceed desired surface tolerances. Excessive surface grinding, however, may result in weakening of the concrete surface, exposure of easily removed aggregate particles, or an unsightly appearance. For these reasons, surface grinding should be performed subject to the following limitations:

- Grinding of surfaces subject to cavitation erosion (hydraulic surfaces subject to flow velocities exceeding 40 ft/s) should be limited in depth, so that no aggregate particles more than ¼ inch in cross section are exposed at the finished surface.

- Grinding of surfaces exposed to public view should be limited in depth, so that no aggregate particles more than ½ inch in cross section are exposed at the finished surface.

- In no event should surface grinding result in exposure of aggregate of more than one-half of the diameter of the maximum size aggregate.

Where surface grinding has caused, or will cause, exposure of aggregate particles greater than the limits described above, the concrete must be repaired by removing and replacing the concrete in accordance with sections D.2.d. through D.3.a.

b. Portland Cement Mortar

Portland cement mortar may be used for repairing defects on new or green concrete. This method may be used provided that the repairs are performed within 24 hours of removing the concrete forms and not more than 72 hours after concrete placement (figure 85), and that repairs meet the following requirements:

- Any single defect less than about 6 inches across
- Where the defects are too shallow for concrete filling and no deeper than the bottom of the nearest reinforcement
- Surfaces are not prominently exposed
- Where the defects are too wide for dry pack filling

.

Figure 85. Portland cement mortar is suitable for repairing voids resulting from air and bleed water trapped under forms, as long as it is done in a timely manner.

Repairs may be made either by low-pressure spray application or by hand application methods

Portland cement mortar was used in the past to repair old or deteriorated concrete on Reclamation projects. However, we now know that making Portland cement mortar repairs to older concrete is rarely successful. Evaporative loss of water from the surface of the repair mortar, combined with capillary water loss into the old concrete, results in unhydrated or poorly hydrated cement in the mortar. Additionally, there can be relatively large amounts of shrinkage that can cause cracking of the mortar and poor bond to the substrate.

A Portland cement mortar patch is usually darker than the surrounding concrete unless precautions are taken to match colors (figure 86). A leaner mix will usually produce a lighter color patch. Also, white cement can be used to produce a patch that will blend with the surrounding concrete. The quantity of white cement to use must be determined by trial.

Figure 86. Portland cement mortar repairs made to a shallow defect. Note how it differs in color from the parent concrete.

(1) Preparation

Concrete to be repaired with Portland cement mortar should be prepared in accordance with the provisions of section B.5. After preparation, the areas should be cleaned, roughened if necessary (preferably by water jetting or wet

sandblasting), and surface dried to a SSD condition. The mortar should be applied immediately after preparation.

(2) Materials

Portland cement mortar contains water, Portland cement, and sand. In addition, prepackaged materials can be used, as long as the materials are suitable for the specific application and exposure conditions. The cement should be of the same type used in the concrete being repaired. The water and sand should be suitable for use in concrete, and the sand should pass a No. 16 sieve. The cement to sand ratio should be between 1:2 and 1:4, by volume, depending on the application technique. Only enough water should be added to the cement-sand mixture to permit placing, which is usually a thick, creamy consistency if it is placed by hand.

(3) Application

For larger areas, best results with replacement mortar are obtained when the material is pneumatically applied using low-pressure, mortar spraying equipment. Equipment commonly used for shotcreting is too large to be satisfactory for the ordinarily small size mortar repairs of new concrete. However, small equipment, such as that shown in figure 87, has been satisfactory for small-scale repair work when the mortar was premixed to a consistency of dry-pack material.

Figure 87. Using low-pressure spray equipment to apply Portland cement mortar.

No initial application of cement, cement grout, or wet mortar should be made. If repairs are more than 1 inch deep, the mortar should be applied in layers not more than ¾ inch thick to avoid sagging and loss of bond. After completion of each layer, there should be a lapse of 30 minutes or more before the next layer is placed. It is not necessary to scratch or otherwise prepare the surface of a layer before applying the next layer, but the mortar must not be allowed to dry between applications.

When completing the repair, the defect should be slightly overfilled. After the material has partially hardened but can still be trimmed off with the edge of a steel trowel, excess material should be shaved off, working from the center toward the edges. Extreme care must be used to avoid impairment of bond.

For minor restorations, satisfactory mortar replacement may be performed by hand. The success of this method depends on complete removal of all defective concrete, good bonding of the mortar to the concrete, elimination of shrinkage of the patch after placement, and thorough curing.

(4) Curing

The most common cause of failure of Portland cement mortar is improper curing. It is essential that mortar repairs receive a thorough water cure starting immediately after initial set and continuing for 14 days. In no event should the mortar be allowed to become dry during the 14-day period following placement. Following the 14-day water cure, and while the mortar is still saturated, the surface of the mortar should be coated with two coats of a curing compound that meets Reclamation concrete curing specifications. If this curing procedure cannot be followed, or if conditions at the job site will not allow it, it would be more cost effective to use a different repair material.

c. Dry Pack and Bonded Dry Pack

Dry pack is a combination of Portland cement and sand passing a No. 16 sieve, mixed with just enough water to hydrate the cement (when formed into a ball, by hand, it is fairly stiff but sticks together). The material is placed in holes using vigorous rodding and tamping methods. If done properly, dry pack is a very durable, long-lasting repair method that is fairly low cost and easy to apply.

Dry pack should be used for filling holes that have a depth equal to, or greater than, the least surface dimension of the repair area. Dry pack repair is suitable for cone bolt holes, she bolt holes, core holes, grout holes, holes left by the removal of form ties, and for narrow slots cut for repair of dormant cracks. It can be used

to cover the exposed ends of cut reinforcement after the reinforcement is removed to a minimum 2-inch depth below the surface.

Do not use dry pack for relatively shallow depressions where lateral restraint cannot be obtained, for filling behind or under reinforcement, or for filling holes that extend completely through a concrete section. For dry pack to be successful, it must have a restraining recess to pack against.

For the dry pack method of concrete repair, holes should be sharp and square at the surface edges, but corners within the holes should be rounded, especially when it is required to be watertight. The interior surfaces of holes left by cone bolts and she bolts should be roughened to develop an effective bond. This can be done with a notched, tapered reamer or a star drill. Other holes should be undercut slightly in several places around the perimeter, as shown in figure 88. Holes for dry pack should have a minimum depth of 1 inch.

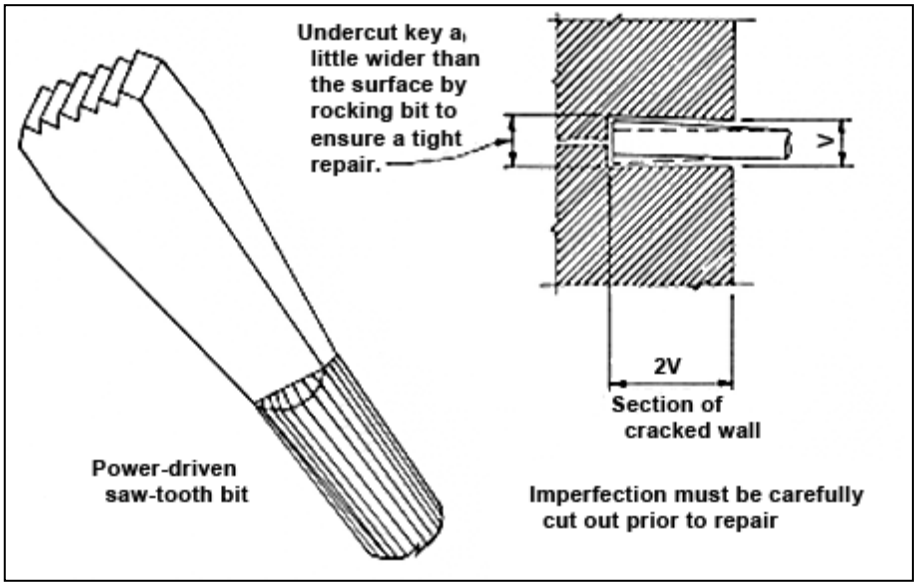

Figure 88. Cutting a slight key into the hole to help hold the repair material in place.

(1) Preparation

Before applying dry pack mortar, carefully inspect the hole to make sure it is thoroughly clean and free from loose or cracked pieces of aggregate. One of the three following methods should be used to ensure good bond of the dry pack repair.

(a) Method 1

The preferred method of ensuring good bond starts with presoaking the hole with wet rags or burlap. The hole is left slightly wet, with a small amount of free water on the inside surfaces. Immediately prior to placing the dry pack material, spray the hole with oil-free air until the surfaces just start to dry. These steps ensure that the concrete repair surface is SSD.

(b) Method 2

The next preferred method is to apply a stiff mortar or grout bond coat immediately before applying the dry pack mortar for holes that are more than 2 inches in minimum cross section and that have rough sides. The bond coat is used to prefill rough areas and holes within the repair void before applying the dry pack. The bonding grout mixture is 1:1 cement and fine sand, by volume, mixed with enough water to produce a thick fluid paste consistency. All surfaces of the hole are thoroughly brushed with the grout, and dry packing takes place quickly before the bonding grout can dry. Under no circumstances should the bonding coat be so wet, or applied so heavily, that the dry pack material becomes more than slightly rubbery. When a grout bond coat is used, the hole to be repaired can be dry. Presoaking the hole with wet rags or burlap prior to dry packing may sometimes give better results by reducing the loss of hydration water, but there must be no free surface water in the hole when the bonding grout is applied.

(c) Method 3

Under special circumstances; for example, with older, poor quality concrete, a third method of ensuring bond is to use an epoxy bonding resin. The epoxy bonding resin should meet the requirements of ASTM C-881 for a Type II, Grade 2, Class B or C resin, depending on the job site ambient temperatures. Epoxies bond best to dry concrete. It may be necessary to dry the hole immediately prior to dry packing using compressed oil-free air, heating, or other appropriate methods. The concrete temperature, however, should not be high enough to cause instant setting of the epoxy. After being mixed, the epoxy is thoroughly brushed to cover all surfaces. Excess epoxy should be immediately removed. Dry pack mortar is then applied before the epoxy starts to harden. The epoxy must be either fluid or tacky when dry packing takes place. If it appears that the epoxy may become hard before dry packing is complete, fresh fluid epoxy can be brushed over epoxy that has become tacky. If the epoxy becomes hard, it must be removed before a new coat is applied. The epoxy ensures a good bond between the dry pack repair and the old concrete. It also reduces the loss of hydration water from the repair to the surrounding concrete, thus assisting in good curing. However, the epoxy-bonded dry pack still requires curing as discussed below. It is not recommended that epoxy be used on the surface, instead of a curing compound, on Reclamation projects.

Using bond coats should never be considered a substitute for quality work. In addition, if not properly used, bond coats can be problematic and will reduce the effectiveness of the repair.

(2) Materials

Dry pack mortar is usually a mixture (by dry volume or weight) of 1 part cement to 2-½ parts sand that will pass a No. 16 screen. While the mixture is rich in cement, the low water content prevents excessive shrinkage and gives high strengths. A dry pack repair is usually darker than the surrounding concrete, unless special precautions are taken to match the colors. Where uniform color is important, white cement may be used in sufficient amounts (as determined by trial) to produce a uniform appearance. For packing cone bolt holes, a leaner mix of 1:3 or 1:3-½ will be sufficiently strong and will blend better with the color of the wall. Sufficient water should be used to produce a mortar that will just stick together while being molded into a ball with the hands, and will not ooze water but will leave the hands damp. The proper amount of water will produce a mix that is just at the point of becoming rubbery when solidly packed. Using any less water will prevent a sound, solid pack, and any more water will result in excessive shrinkage and a loose repair.

(3) Application

Dry pack mortar should be placed and packed in layers that are thin enough to ensure complete packing of the lift. For small holes, the lifts may have a compacted thickness as small as about 3/8 inch. Layers that are too thick will not be well compacted at the bottom of the lift. The surface of each layer should be scratched to facilitate bonding with the next layer. One layer may be placed immediately after another, unless an appreciable rubbery quality develops. If this occurs, delay the repair work to allow the dry pack to stiffen slightly, usually about 30 to 40 minutes. Under no circumstances should alternate layers of wet and dry materials be used. Each layer should be solidly compacted over the entire surface by placing a hardwood dowel or rod against the mortar and striking the rod with a hammer. These rods should be long enough to reach the bottom of the hole, and they should leave enough clearance above the hole to allow easy striking with a hammer. The diameter of the rod should be sufficiently small to allow for good compaction. The use of hardwood rods is preferred, rather than metal bars, because the latter tend to polish the surface of each layer, thus making a less certain bonding and a less uniform fill. Much of the tamping should be directed at a slight angle and toward the sides of the hole to ensure maximum compaction in these areas. After the last lift, the holes should be slightly overfilled, then dry packing should be completed by laying the flat side of a hardwood piece against the fill and striking it with several good hammer blows.

If necessary at a later time, a few light strokes with a damp rag or wood float may improve appearance. Steel finishing tools should not be used, and water must not be used to facilitate finishing.

(4) Curing and Protection

Procedures for curing and protecting dry pack are essentially the same as those used for concrete, and they are described in section D.3.a. Additionally, the dry pack repair area should be protected and not exposed to freezing temperatures for at least 3 days after application of the curing compound. In some cases, it may be possible to cover the repair with a damp cloth and tape plastic over it to provide a moist cure.

d. Polymer Concrete, Including Epoxy Mortar

Polymer concrete (PC) is a concrete material in which Portland cement is replaced with a polymeric resin binder. The binder is combined with fine and coarse aggregate (and perhaps other fillers) to make PC. Typically, the aggregates consist of fine to coarse sand. Water is not used in the mix. There are many types of resins used in PC with a wide range of properties and application requirements. Typical polymeric binders include many epoxies, vinyl esters, polyurethanes, and methyl methacrylates, to name a few. Epoxy PC systems tend to be stiffer than other PC systems. Throughout this section, the term “PC” includes all of the many types of polymer resins used in mortars, including epoxy resins.

PC strengthens and hardens during a chemical reaction between the liquid resin (monomer) and various initiators, promoters, and/or hardeners to chemically link and cross link the monomers. This reaction forms a hard, plastic-like material known as a polymer. There is a wide variety of commercially prepared PCs formulated for a wide variety of concrete repair applications. Whenever a PC is deemed the appropriate repair material, properties and mixing procedures of candidate commercial products should be evaluated. It may be advisable to perform trial placements on mockups. The material with the best performance for the specific application should be selected for use. This process was recently used to help select epoxy mortar for the repair of concrete surfaces of some of the draft tubes at Grand Coulee Dam (Bureau of Reclamation, 2012).

The polymers used in PCs are formulated to provide special properties needed for high performance repair materials. Some of these systems cure very quickly and are very useful in repairing structures that must be immediately returned to service. As an example, some types of PCs are commonly used to repair potholes in concrete highway bridge decks, thereby eliminating the need for long and costly road closures or detours. They are also useful for repairs to structures, such as tunnel linings, that can be maintained in a dry condition for only short periods

of time, as well as for cold weather repairs down to temperatures as low as 15 °F. PC repairs can be accomplished in thicknesses varying from about ¼ inch to several feet if appropriate precautions are taken. Epoxy PC systems must meet the appropriate requirements of ASTM C881 (100-percent solids, Type III, Grade 2, Class B or C). Class B epoxy is used between 40 and 60 °F. Class C epoxy is used above 60 °F up to the highest temperature defined by the epoxy manufacturer.

PC should be used where the exposure conditions are expected to remain at a relatively constant temperature. PCs have thermal coefficients of expansion that may be significantly different from conventional concrete. If such materials are used under conditions of wide and frequent temperature fluctuations, they will cause failure just below the bond surface in the base concrete. For this reason, current Reclamation practice discourages the use of PC under conditions of frequent or large temperature fluctuations. Examples of suitable applications include tunnel linings, indoor or interior concrete, the underside of concrete structures such as bridge decks, continuously inundated concrete such as stilling basin floors, canal linings below water line, or concrete pipe.

Many PC systems must be applied to dry concrete. Some of them (especially some epoxy mortars) can be applied to damp concrete. Properly applied PC repairs have a long history of successful performance on Reclamation concrete when used under appropriate conditions.

Different formulations have different thermal coefficients, and a suitable material may be found for a specific application by considering different resins and aggregates. In some circumstances, it may be necessary to use PC for its special properties (i.e., curing in very cold weather), even though it might be in an environment not ideally suited for the material (i.e., high seasonal temperature fluctuations). In those cases, the practitioner needs to realize that the repair will likely not be long lasting.

Applying PC to repair areas of concrete deterioration caused by corroding reinforcing steel is not recommended. The materials have different electrochemical properties than the surrounding concrete. These areas where materials have differing properties and are connected with a conductor (reinforcing steel) can form a corrosion cell that will accelerate corrosion at the repair area perimeters.

PC can develop strength and durability properties very quickly and is useful where rapid repairs to concrete are required. They can be quite strong and very durable. Some PCs can be put into service in a very short time. This feature makes them useful as protective overlays on conventional concrete exposed to corrosive or severe environments.

CGSL personnel can provide guidance and recommendations for the use of these materials.

(1) Preparation

Concrete preparation for PC repairs should be in accordance with section B.5. Although some manufacturers say that PC may be used for feather edge repairs, Reclamation recommends at least a ¼-inch squared edge to improve repair quality. Special care should be taken to ensure that the base concrete is dry prior to application of the repair material if required by the PC system manufacturer (figure 89). If a dry substrate is required, it must remain dry throughout the curing process. Generally, the concrete can be considered suitably dry if no moisture appears under a sheet of transparent polyethylene taped to the concrete surface during a minimum 2-hour exposure to full sunlight. Flowing water may remove the fresh polymer concrete if it is allowed on the concrete prior to development of initial set.

Figure 89. Drying the surface of concrete using oil-free compressed air to meet the surface moisture requirements of the manufacturer.

If rebar is encountered in the repair, it may require a bond coat if required by the manufacturer. As with other repairs, the rebar must be clean and free of materials that will impair bond. If the rebar is corroded and is the cause of damage, the use

of PC should be carefully evaluated to avoid additional corrosion, as described above. For some applications of PC, the concrete may need to be heated to sufficient depth, so that the surface temperature does not drop below the minimum temperature requirements during the application and curing of the mortar. This may require several hours of preheating with radiant heaters or other approved means (figure 90). If existing conditions prohibit meeting these temperature requirements, suitable modifications should be adopted upon the approval of the inspector or other responsible official. The concrete temperature during preheating should never exceed the upper limits set by the product manufacturer, nor should the PC components be heated above manufacturer requirements.

Figure 90. Using heaters in an enclosed area to increase the temperature to meet application requirements.

(2) Materials

A number of manufacturers have developed prepackaged PC systems containing aggregate, resins, and other necessary ingredients. It is also possible for the user to extend the polymer concrete, particularly when used to fill depressions deeper

than 1 inch, by supplying and adding coarse aggregate to the prepackaged PC system during mixing. The prepackaged polymer concretes may also contain bond coat systems that must be mixed and applied to the base concrete prior to application of the polymer concrete mixture.

For critical repair jobs, such as areas of high velocity flow, or for repairs requiring a considerable quantity of materials, the staff at the CGSL should evaluate samples of resin and aggregates for use in mix design determinations. The samples should consist of a minimum of 1 gallon total quantity of resin components and a minimum of 50 pounds of graded sand and/or aggregate. Samples should be submitted at least 30 days prior to use and be labeled or otherwise identified with the specifications number under which the material is to be used.

(3) Mixing and Handling

PC systems have specific mixing requirements as directed by the PC manufacturer. Mixing PC involves premixing proper quantities of resin and other ingredients, and then mixing the resin system with sand or aggregate.

The PC components require accurate combination of components and mixing prior to use. Once mixed, the material has a limited pot life and must be used quickly. Pot life refers to the period of time elapsing between mixing of ingredients and their stiffening to the point where the material cannot be used satisfactorily. The repair resin should be prepared by adding the required quantity of hardener to the resin, in proportions recommended by the manufacturer, followed by thorough mixing using equipment made for mixing resin systems. Because the pot life of the mixture depends on the temperature (longer at low temperature, much shorter at high temperature), the quantity mixed at one time should be applied within about 30 minutes. The addition of nonreactive thinners or diluents to the resin mixture is not permitted because they weaken the PC.

The PC is composed of aggregates and resin suitably blended to provide a workable mix. Mix proportions should be established, batched, and reported on a weight basis, although the dry sand and mixed resin may be batched by volume using suitable measuring containers that have been calibrated on a weight basis. If equivalent volume proportions are being used, care must be taken to prevent confusing them with weight proportions.

Figures 91 and 92 show simple methods for combining mortar ingredients that are adequate for mixing epoxy mortar for both small and large repairs.

Figure 91. Using a simple bucket mixer to mix epoxy resin.

Figure 92. Mixing epoxy mortar ingredients in buckets.

(4) Application

Each manufacturer of packaged PC provides detailed instructions for storing, proportioning, mixing, and applying its product. These instructions must be closely followed to obtain a satisfactory repair.

If required by the PC manufacturer, a bond coat system is mixed and applied to the prepared concrete prior to application of the PC. Care must be taken to proportion and mix the bond coat components properly. Some manufacturers specify that the bond coat be applied and cured prior to placing the PC. Others specify that the PC be applied while the bond coat is still in the liquid state. It is important to follow the procedures recommended by the manufacturer of the product actually being used.

Polymer concrete can be mixed in paddle-type, rotary drum-type, or other types of power equipment suitable for mixing concrete repair mortars. Small quantities of PC can even be mixed in the original shipping containers. For conventional mixing for larger quantities, it is common practice to first add the dry powder and aggregate components to the mixer, and then add the liquid resin. With some systems, the liquid component may require a separate premixing step to combine the monomer with the catalyst or initiators needed for polymerization. Other manufacturers include the initiators in the powder-fine aggregate component, thereby eliminating the premixing requirement.

The mixed PC can be placed using the same tools and procedures used for conventional concrete (figure 93). Some PC mixtures can be almost self-leveling and require only a minimum finishing operation, while others can be very stiff. Other formulations can be mixed to the consistency of drywall taping compound and applied using drywall mud application techniques (figure 94). Still others can be spray applied, using mortar spray equipment, and then smoothed with a float or trowel.

Light mechanical vibration should be provided to consolidate placements thicker than 2 or 3 inches (figure 95). Once the PC has been placed and consolidated, it should be screeded to proper grade and quickly finished. The top surface of the repair can form a “skin” soon after placement. If troweling is attempted after the skin forms, it will tear and cause an unsightly surface.

Polymer concrete develops a strong bond to most materials. If forms are used, they must be leakproof and provided with some kind of bond breaker or release agent. Wrapping the forms with polyethylene film has proven very effective for preventing bond between the form and the PC.

Figure 93. Placing polymer concrete to repair shallow damage to a stilling basin.

Figure 94. Using drywall mud application tools to apply epoxy mortar.

Figure 95. Consolidating polymer concrete with a vibrator.

(5) Curing

Polymer concretes can harden very quickly under most ambient conditions and can develop nearly full strength relatively quickly (from a few hours to a few days, depending on the system). During this time, the fresh concrete must be protected from water and not disturbed (figure 96). Epoxy PC systems must be formulated for the anticipated ambient and placement conditions, and placements must occur within the temperature limits specified by the epoxy resin manufacturer. Cure times for all polymer materials are affected by temperature. Some PC systems allow mixture ingredients to be adjusted to shorten or lengthen cure times in colder or hotter weather. Alternately, the repairs can be made during different parts of the day to better match curing requirements.

Figure 96. Protecting the polymer concrete until it gets hard.

Postcuring, if required or allowed by the manufacturer, can then be initiated at elevated temperatures by heating the PC and the concrete beneath the repair. Post-curing should continue for a minimum of 4 hours at a surface temperature generally not less than 90 °F and not more than 110 °F. The heat could be supplied by portable propane-fired heaters, infrared lamp heaters, or other approved sources that are positioned to attain the required surface temperatures (figure 97).

Figure 97. Applying heat to speed curing of a polymer concrete repair. Note the soil berms to prevent water from flowing into the repair area.

(6) Storage

Some polymer concrete components are heat sensitive and flammable. These materials should be stored out of direct sunlight, in the original shipping containers, and in well-ventilated areas away from sources of ignition. The storage temperature should not exceed 80 °F. Storage requirements must meet the manufacturer's recommendations.

e. Epoxy-Bonded Replacement Concrete

Epoxy-bonded concrete repairs are used for special circumstances. No other type of bonding agent is approved by Reclamation, unless it is a bonding agent required by a specific repair material manufacturer. If there is uncertainty about using a specific bonding agent, consult with CGSL staff.

Using a bonding agent for replacement concrete repairs is usually not appropriate or necessary. Rather, every effort should be made to perform proper surface preparation, repair material placement, and curing to ensure quality repairs. All too often, bonding agents are used as a substitute for quality work.

Epoxy-bonded replacement concrete is generally used for repairs to concrete that are between about 1-½ and 6 inches thick. In general, this method should be used when the parent concrete is of questionable quality, and deeper repairs are not practical. In this case, the epoxy bond coat is used to somewhat improve the existing concrete, giving the replacement concrete a somewhat stronger substrate. The epoxy bonding resin is used to improve bond between the existing concrete and the replacement concrete.

When making this decision, it is important to consider all aspects of the repair. For example, the durability of the substrate concrete in freezing and thawing weather could be an important consideration. If the substrate is not durable in this exposure, it is important to determine whether the epoxy bond coat might trap moisture in the substrate, thereby increasing the rate of deterioration in freezing and thawing weather. Also, as with PC, care should be exercised if epoxy-bonded concrete will be used to repair shallow deterioration resulting from corroding reinforcement. The epoxy bond coat may create electrical potentials that differ sufficiently from those in the surrounding concrete, resulting in accelerated corrosion at repair perimeters.

(1) Preparation

Concrete to be repaired with epoxy-bonded concrete must be prepared as described in section B.5.

(2) Materials

The materials used in epoxy-bonded concrete repairs consist of conventional Portland cement concrete and an epoxy resin bonding agent.

The concrete used for epoxy-bonded repairs is the same as that used for replacement concrete repairs (section D.3.a.).

A number of proprietary epoxy formulations prepared for bonding new concrete to old concrete are available. Many of these materials are high quality products that can be used with reasonable certainty. Care should be taken to use only the epoxy bonding resins that meet the requirements of ASTM C-881 for a Type II, Grade 2, Class B or C epoxy system. Class B epoxy should be used when the temperatures are above 40 °F but below 60 °F. Class C epoxy should be used

when concrete temperatures are from 60 °F up to the maximum temperature recommended by the epoxy manufacturer.

The epoxy resin used for epoxy-bonded concrete is a two component, 100-percent solids resin system that requires accurate proportioning and thorough mixing prior to use. Manufacturer recommendations should be followed during preparation and application of the resin. Concrete should be used as described in section D.3.a.

(3) Application

Use of epoxy-bonded concrete in repairs that require forming, such as on steeply sloped or vertical surfaces, is only appropriate when sufficient time is available to place concrete into the forms while the epoxy bonding resin is still fluid. If the resin cures before the concrete is placed, no bond will develop between the old and new concrete. It is a good idea to practice installing forms at least once before actually applying the epoxy bond coat.

Immediately after application of the epoxy resin bonding agent, and while the epoxy is still fluid, concrete should be placed using appropriate concrete placing practices (section D.3.a., figure 98). After placement, the concrete should be given a proper finish, as required. Troweling, if required, should be performed at the proper time and with heavy pressure to produce a smooth, dense surface free of defects and blemishes.

Figure 98. Placing concrete on an epoxy bonding resin.

(4) Curing

Even though an epoxy bond coat is used, it is still important to properly cure epoxy-bonded concrete. As soon as the epoxy-bonded concrete has hardened sufficiently to prevent damage, the concrete should be properly cured (section D.3.a.).

f. Packaged Cementitious and Chemical Repair Mortars

There are a large number of products that fall into this category of repair materials. Some products contain Portland cement and other hydrating cementitious compounds, while others contain various chemically reacting cementing compounds that do not hydrate with water (for example, magnesium phosphate compounds). They are proportioned to have a wide variety of consistencies, ranging from self-consolidating (requiring little or no vibration), to very stiff for vertical and overhead application. These products typically gain strength fairly quickly, although rapid strength gain is usually not necessary for Reclamation repair work and can lead to shrinkage problems. They can also be proportioned to be durable in a variety of different exposure conditions, including acid exposure. They are generally proportioned to repair shallow defects from about ¼ inch to 2 inches thick. In many cases, they can be used for deeper repairs; however, as repairs get larger, the material savings of using cast in place concrete becomes important.

Unfortunately, the performance of these products has been inconsistent (Smoak and Husbands, 1996). Thus, Reclamation has been reluctant to use them and typically classifies them as nonstandard repair materials (chapter E). Recently, there have been some improvements in this area, in that some materials have been specially proportioned to greatly reduce or eliminate shrinkage cracking. Cracking (figure 99) of some of these thin repair mortars is a significant issue for long-term durability. Formulations for these products frequently change, so testing the products before use is advised.

Recently, a select few products have been specified for some Reclamation concrete repair work. The CGSL staff should be consulted for specific material recommendations. Some manufacturers may claim that their packaged repair mortars can be applied with feather edges, but Reclamation experience shows otherwise. Squared-up perimeters of repair areas are required if high quality repairs are to be achieved. In some applications, it may be appropriate to ask the material manufacturer to certify that their product is suitable for use for the intended application.

Figure 99. Extensive cracking in a packaged thin repair mortar applied to a spillway crest. Unfortunately, this occurs too often for thin repair mortars.

(1) Preparation

Concrete that will be repaired with packaged cementitious and chemical repair mortars must be prepared as described in section B.5. In addition, some of these repair mortars may have specific surface preparation requirements in addition to those mentioned in section B.5. Some products may require application to SSD surfaces, or require a bond coat, and some products may require that the existing concrete surface be dry. If a bond coat is recommended, the user should ensure that it is absolutely necessary before applying it; otherwise, it may simply serve as another area where the repair could eventually fail.

(2) Application

Due to the large number of products available, manufacturer recommendations should always be followed. Application methods for one product could be vastly different for another product, even if both products are supplied by the same manufacturer. In general, high slump products are applied to horizontal surfaces or into forms. If the higher slump materials are placed in forms, the provisions described in section D.3.a. apply. The forms must be tight, structurally adequate,

and well anchored. Products made for vertical and overhead application (very stiff) must be applied with sufficient force and effort to ensure they are in intimate contact with the substrate to facilitate an adequate bond (figure 100). Many of these types of products can generate significant heat during curing, and some may require that the repair material be placed in thin lifts to prevent the heat from damaging it. In addition, some products are suitable for spray application methods (spray-applied mortars). When using these materials, it is always advisable to use trained workers and to perform test placements.

Figure 100. Applying a stiff repair mortar using hand packing.

(3) Curing

As with application, there are numerous products that have various methods to achieve curing. Manufacturer's recommendations should always be followed. Some require normal concrete curing practices; some require moist curing for a few days, followed by drying; and some require no special curing steps. However, they all must be protected until the concrete hardens, and some require that temperatures remain within specified ranges for a limited time.

3. Thick Repairs

In general, thick repairs refer to repairs that are about 3 inches thick and that completely encompass at least some reinforcing steel from the existing structure. If the repairs do not encompass any steel from the existing structure, they are typically at least 6 inches thick. In such cases, consideration should be given to anchoring additional reinforcement (that will be embedded in the repair material) to the existing concrete. Typical examples of thick repairs include replacement concrete, preplaced aggregate concrete, shotcrete, and silica fume concrete.

a. Replacement Concrete

Replacement concrete is the most predominant concrete repair method Reclamation uses. It will meet the needs of a majority of concrete repair projects. It is generally the most cost-effective method and usually works better than other methods. This method should be used:

- When repairs are made with concrete without special bonding agents
- When the repair area exceeds about ½ square foot and has a depth sufficient to expose more than one-third of the circumference of reinforcing steel (requiring removal of concrete around the steel), or when the repair area is 6 inches deep and no reinforcing is present
- For holes greater than about 3 inches across and that extend entirely through concrete sections

Replacement concrete repairs are made by placing new concrete in the repair area without the use of a bonding agent or Portland cement grout. The combination of an appropriate repair thickness, quality concrete, good surface preparation, and good curing practices ensures adequate hydration and a good bond between the new concrete and existing substrate. Because the defective concrete is being replaced with high quality concrete, the properties of the repair material are reasonably similar in many ways to the parent concrete. For this reason, replacement concrete is the best repair method in many cases.

(1) Preparation

Deteriorated or unsound concrete should be removed, following the methods described in section B.5. The perimeter of the repair area should be saw cut to a minimum depth of 1 inch. If the shape of the defect makes it advisable, the remainder of the concrete may be removed by chipping below the vertical saw cut

and continuing until an appropriate depth is reached. Reinforcing steel should not be left partially embedded. Instead, concrete should be removed around each bar to provide at least 1 inch of clearance, or the maximum aggregate size of the replacement concrete plus ¼ inch, whichever is greater.

Repairs to exposed horizontal flat surfaces are fairly straightforward. Forming is fairly basic, and no special access to place the concrete is needed. However, repairs to vertical surfaces, the underside of beams, enclosed horizontal surfaces, or sloped surfaces will require special formwork and steps to ensure that the concrete is properly placed and consolidated.

For concrete replacement repairs to damage in walls, the saw cut should be made square to the surface, and concrete should be removed in a way that creates an upward slope (generally about 1:3) from the back of the repair to the front, from which the concrete will be placed (see figure 30, section B.5). This slope is necessary so that concrete can be placed without leaving air pockets at the top of the repair. Sometimes, when the damage extends through a wall or beam, it may be necessary to fill the area from both sides and modify the slope at the top of the repair accordingly.

The bottom and sides of the repair area should be square with the face of the structure. When the defect or repair area extends through the concrete section, perimeter saw cuts are also needed on the back face to prevent spalling and feather edges. All interior corners should be rounded to a minimum radius of 1 inch to prevent trapping air.

For repairs on surfaces subject to destructive water action, and for other repairs on exposed surfaces, the perimeters of areas to be repaired should be saw cut as directed and, if possible, to a depth of 1-½ inches before the defective concrete is removed. The new concrete should be secured by keying methods, if possible. Figure 101 shows the invert of an outlet works properly prepared for replacement concrete.

The construction and setting of forms are important steps in the procedure for satisfactory concrete replacement, where the concrete must be placed from the side of the structure. An example of form details for walls is shown in figure 102. To obtain a tight and acceptable repair, the guidelines below should be followed:

- For low slump conventional concrete, the front forms for wall repairs more than 18 inches high should be constructed in horizontal sections, so the concrete can be conveniently placed in lifts not more than about 12 inches thick. For concrete formulated with a higher slump (for example, self-consolidating concrete), higher lifts can be used. The back form may be built in one piece. As concreting progresses, the fit of form sections to be set should be tested before placement begins.

Figure 101. An outlet works repair being prepared for replacement concrete.

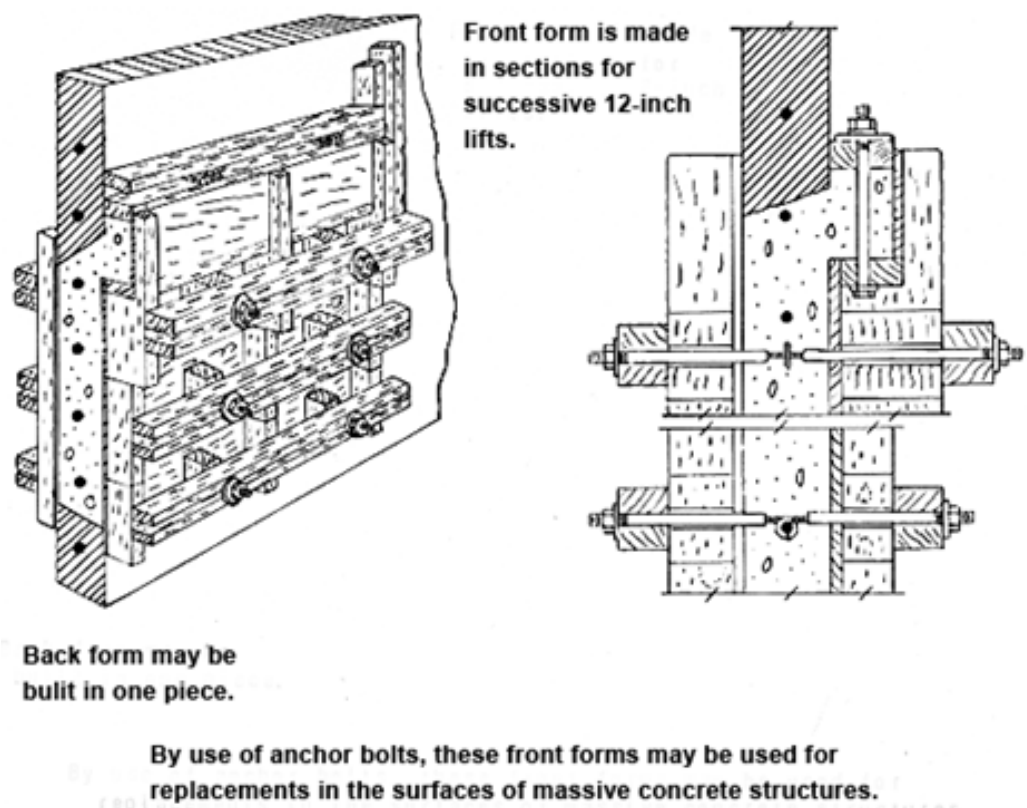

Figure 102. Form details for placing concrete in vertical repair holes.

- To exert pressure on the largest area of form sheathing, tie bolts should pass through wooden blocks fitted snugly between the walers and the sheathing.

- For irregularly shaped holes, chimneys may be required at more than one level. When beam connections are required, a chimney may be necessary on both sides of the wall or beam. For such construction, the chimney should extend the full width of the hole.

- Unless a low shrinkage, low bleed concrete mixture is used, forms should be sufficiently strong so that pressure can be applied to the chimney using a pressure cap. The pressure cap can help offset the effects of shrinkage and bleed water.

- Forms must be mortar tight at all joints between adjacent sections, between the forms and concrete, and at tie bolt holes to prevent the loss of mortar if pressure is applied during the final stages of placement. Jute, twisted or stranded caulking cotton, folded canvas or burlap strips, or similar material should be used as the forms are assembled to make them mortar tight.

- For concrete proportioned to be high slump, placement practices and form design must be adjusted to accommodate the higher slumps (see Reclamation's concrete guide specifications in Part II).

Surfaces of old concrete to which new concrete is to be bonded must be clean, rough, and in a SSD condition.

(2) Materials

For larger placements, and for standard concreting practices, including placing, consolidating, finishing, and curing, consult Reclamation's concrete guide specifications in Part II to select the appropriate concrete mixture types and proportions. For smaller placements that can be mixed by hand or in small portable mixers, some bagged cementitious and chemical repair mortars can be used (refer to section D.2.f.).

For replacement concrete repair applications, special emphasis should be placed on using low shrinkage and low bleed concrete mixtures. Concrete for repair should have the same water to cementitious ratio as used for similar new structures, but it should not exceed 0.45, by weight, of cementitious materials. The largest appropriate maximum size aggregate, and a slump as low as is consistent with proper placing and thorough vibration, should be used to minimize water content and shrinkage. Sometimes, especially when repairing new concrete because of large voids or rock pockets in the placement, a repair material is batched with the same mixture that was used as the parent concrete, except that

the large aggregate is removed. This practice is inappropriate. The resultant mixture will have a higher paste content than needed, and it will very likely experience excessive shrinkage and bleed water. Instead, a new mixture should be used that is properly proportioned and is low shrinkage.

In almost all cases, the concrete should be air entrained. Where surface color is important, the cement should be carefully selected or blended with white cement to obtain the desired results, or coloring agents should be used, as described in Reclamation's concrete guide specifications in Part II.

Shrinkage related to replacement concrete can be a significant issue because it may lead to disbonding and cracking. Reclamation's concrete guide specifications contain materials and proportioning guidelines for placing low shrinkage concrete, including the use of chemical and dry shrinkage reducing additives. To minimize shrinkage, the concrete should be kept as cool as practical during placement, preferably at about 70 °F or lower. Materials should, therefore, be kept in shaded areas during warm weather. It may sometimes be necessary to use ice in mixing water. Batching of materials should be by weight, but batch boxes may be used if they are of the exact size needed. Because batches for this class of work will be small, the uniformity of the materials is important.

For two recent concrete replacement repair projects in remote areas, concrete batches were prepared dry in large sacks (3,000 pounds) and then shipped to the site (see section C.7). After arrival, the sacks were emptied into transit mixers, water and additional admixtures were added, and the concrete was then mixed and placed. This method resulted in high-quality, high-strength concrete needed to resist abrasion erosion. However, as with all concrete batches, it is important to follow proper quality assurance procedures to ensure that the ingredients are as specified and are proportioned properly in the bags.

(3) Application

For general concrete placement considerations, Reclamation's concrete guide specification should be consulted. When placing concrete in lifts, placement should not be continuous. For conventional concrete, some time should elapse between placements to allow for some water bleeding and slight stiffening of the concrete. However, in no case should the concrete be so stiff that the concrete vibrator cannot easily penetrate the previous lift. When chimneys are required at more than one level, the lower chimney should be filled and allowed to remain for about 30 minutes between lifts. When chimneys are required on both faces of a wall or beam, concrete should be placed in only one of the chimneys and allowed to move to the other chimney because air pockets may become trapped in the concrete if it is placed in both chimneys at the same time.

The quality of a repair depends not only on use of high-quality concrete, but also on the thoroughness of the vibration during and after concrete placement. Care should be taken to use proper vibration methods. Immersion-type vibrators should be used if there is suitable access. If not, this type of vibrator can sometimes be effectively used on the outside of the forms for smaller repairs. Form vibrators should also be considered. Form vibrators can be used to good advantage on forms for large inaccessible repairs, especially on a one-piece back form, or they can be attached to large metal fittings such as hinge base castings. If self-consolidating concrete is used, vibration is likely not needed or advised.

For repairs that will use pressure caps to help reduce the effects of shrinkage and bleed water, pressure should be applied, and the form should be vibrated immediately after the repair area has been completely filled. This operation should be repeated at about 30-minute intervals until the concrete hardens enough to no longer respond to vibration. Pressure is applied by wedging or by tightening the bolts that extend through the pressure cap (figure 102). When filling the top of the form, concrete to a depth of only 2 or 3 inches is needed in the chimney under the pressure cap. A greater depth tends to dissipate the pressure. After the hole has been filled and the pressure cap is placed, the concrete should not be vibrated without a simultaneous application of pressure. Doing so may produce a film of water at the top of the repair that will prevent bonding.

Traditionally, aluminum powder was sometimes added to concrete, which causes the concrete to expand, as described in section 182 of the Concrete Manual (Bureau of Reclamation, 1975). Now there are other shrinkage compensating additives and admixtures also available for use. Under favorable conditions, these compensated mixtures have been successfully used to secure tight, well-bonded repairs in locations where the replacement material was introduced from the side. Forms similar to those shown in figure 102 should be used. Time should not be allowed for settlement between lifts. When the top lift and the chimney are filled, no pressure need be applied, but the pressure cap should be secured in position, so that expanding concrete will be confined to, and completely fill, the area undergoing repair. There should be no subsequent revibration. For information about additives and admixtures that can be used to reduce or eliminate shrinkage and bleeding, consult CGSL.

Concrete replacement in open top forms (such as for reconstruction of the tops of walls, piers, parapets, and curbs) is a comparatively simple operation. The best durability will be achieved by using the largest practical maximum size aggregate and the lowest practical percentage of sand. No special features are required in the forms, but they should be mortar tight when vibrated, and they should give the new concrete a finish similar to the adjacent areas. The top surfaces should be sloped to provide drainage. Manipulation during finishing operations should be held to a minimum, and a wood float finish is preferable to a steel trowel finish. Reclamation concrete guide specifications do not permit steel trowel finishing of air-entrained concrete exposed to freezing and thawing weather. Edges and

corners should be tooled or chamfered. Use of water for finishing is prohibited. As for many other repair cases, use of low shrinkage materials will improve repair results.

Forms for concrete replacement repairs can usually be removed the day after casting, unless form removal would damage the green concrete. In this case, stripping of forms should be postponed. The concrete left in the chimneys should normally be removed within 24 hours of placement. If the trimming is done earlier, the concrete tends to break back into the repair. The chimneys should always be removed by working up from the bottom because working down from the top tends to break concrete out of the repair. The rough area resulting from trimming should be filled and stoned to produce a surface comparable to that of surrounding areas. If necessary, a Portland cement mortar repair can be used to smooth the surface.

Some replacement concrete does not require forms. Replacement of damaged or deteriorated paving or canal lining slabs, wherein the full depth of the slab is replaced, involves procedures no different from those required for the best results in original construction. Contact edges at the perimeter should be saw cut square with the surface.

Special repair techniques are required for restoring damaged or eroded surfaces of spillway or outlet works tunnel inverts and stilling basins. In addition to the usual forces of deterioration, such repairs often must withstand enormous dynamic and abrasive forces from fast flowing water and, sometimes, from suspended solids. For repairs to be durable in this environment, high-quality aggregate and high compressive strength concrete are needed. High strength silica fume concrete (section D.3.d.) is the repair material of choice for these types of repairs.

(4) Curing and Protection

The importance of curing replacement concrete repairs cannot be overemphasized. Complete failure of repairs has been attributed to improper curing. There is no known condition, aside from flooding the repaired structure (which, in itself, is an excellent curing method), that does not require curing of cementitious repairs. Because of the relatively small volume of most repairs, and the tendency of old concrete to absorb moisture from new material, water curing is a highly desirable procedure, at least during the first 24 hours after placement or form removal. When forms are used for repair, they can be removed and then reset to hold a few layers of wet burlap in contact with new concrete. One of the best methods of water curing is to lay burlap over the repair area, followed by placing a soil soaker hose beneath a plastic membrane.

When a curing compound is used, the best curing combination is to allow an initial water curing period of 7 days (never less than 24 hours) and then apply a

uniform coat of curing compound while the surface is still damp. It is always essential that repairs, even dry pack repairs, receive some water curing and be thoroughly damp before the curing compound is applied. If nothing better can be devised for the initial water curing of the dry pack and similar repairs, a reliable worker should be assigned to make the rounds with water and a large brush, or a spraying device, to keep the repaired surfaces wet for 24 hours prior to application of a curing compound. White curing compound may be used only when its color does not create an objectionable contrast in appearance.

b. Preplaced Aggregate Concrete

Preplaced aggregate concrete is an excellent repair material that has not been used much in recent years. Preplaced aggregate concrete is made by injecting Portland cement grout, with or without sand, into the voids of a formed, compacted mass of clean, graded, coarse aggregate. The preplaced aggregate is washed and screened to remove fines before it is placed into the forms. As the grout is injected or pumped into the forms, it displaces any included air or water and fills the voids around the aggregate, thus creating a dense concrete having a high aggregate content.

Because the aggregate has point-to-point contact prior to grout injection, preplaced aggregate concrete undergoes very little settlement, curing, or drying shrinkage during hydration. Drying shrinkage of preplaced aggregate concrete containing 1-½ inch maximum size aggregate is about 200 to 400 millionths, whereas drying shrinkage of conventional concrete containing the same size maximum aggregate is about 400 to 600 millionths.

Another advantage of preplaced aggregate concrete is the ease with which it can be placed in certain situations where placement of conventional concrete would be extremely difficult or impossible. Preplaced aggregate concrete is especially useful in underwater repair construction. It has been used in a variety of large concrete and masonry repairs, including bridge piers and the resurfacing of dams. It has been used to construct atomic reactor shielding and plugs for outlet works and tunnels in mine workings, and it has been used to embed penstocks and turbine scroll cases. Figure 103 shows the upstream face of Barker Dam, near Boulder, Colorado, which was resurfaced with a combination of precast facing elements and preplaced aggregate concrete cast between the facing elements and the existing dam.

Although preplaced aggregated is adaptable to many special repair applications, it is essential that the work be undertaken by well-qualified personnel who are willing to follow the construction procedures required for this repair material. Form work for preplaced aggregate concrete requires special attention to prevent grout loss. Leaking forms can cause significant problems. The injected grout flows much more easily than plastic concrete, and it takes longer to set. Forms,

therefore, must be constructed to handle more pressure than would be necessary with conventional concrete. Form bolts should fit tightly through the sheathing, and all possible points of grout leakage should be plugged or caulked. Additional information is available from ACI (ACI 304.1, 2005).

Figure 103. The upstream face of Barker Dam was repaired with a combination of precast panels and preplaced aggregate concrete.

(1) Preparation

The preparation of concrete to be repaired by preplaced aggregate concrete is identical to the preparation required for replacement concrete (section D.3.a.) if the development of bond is required.

(2) Materials

Grout for preplaced aggregate concrete can be mixed with sand either of the gradation specified for conventional concrete or with fine sand, fly ash, water-reducing admixtures, and pumping admixtures as dictated by the smallest void space between the coarse aggregate particles. If the smallest coarse aggregate particle is 1-½ inches, then the sand gradation is that specified for conventional concrete. The Portland cement, water, and sand are mixed using high-speed centrifugal grout mixers that produce well-mixed grouts of a creamy consistency. If coarse aggregate particles are as small as ½ inch, a grout mixture is prepared containing fine sand passing a No. 8 screen, and with at least 95 percent passing a No. 16 screen. Best pumping characteristics will be obtained with a fineness modulus between 1.2 and 2, and with the rounded shape of natural sands as opposed to crushed sands.

Adding fly ash and water-reducing admixtures improves the grout's ability to flow and increases its ultimate strength. Proprietary pumping admixtures are commonly used to increase the penetration and pumpability of the final grout. The consistency of grout for preplaced aggregated should be uniform from batch to batch and capable of being readily pumped into the voids at relatively low pressure. Consistency is affected by water content, sand grading, filler type and content, cement type, and admixture type. For each mix, there are optimum proportions that produce the best grout pumpability or consistency, and tests are necessary for each job to determine these optimum proportions. Each proposed grout mix should be evaluated using the appropriate grout tests to ensure that the properties are suitable (Madera and Joy, 2014).

The maximum size coarse aggregate used with the grout is the largest available, provided that the aggregate can be easily handled and placed. Coarse aggregate should meet all of the requirements of coarse aggregate for conventional concrete. It is essential that the coarse aggregate be clean. The aggregate should be well graded from the smallest size (½-inch minimum or 1-½-inch minimum) up to the maximum size, and when compacted into the forms, should have a void content of 35 to 40 percent.

(3) Application

The grout piping system used with preplaced aggregate concrete must be designed to serve at least three purposes: (1) to deliver and inject grout, (2) to provide means for determining the grout level in the forms, and (3) to serve as vents in enclosed forms for the escape of air and water. Proper design and location of the grout piping system are essential for successful placement.

The grout delivery pipeline should be a recirculating system (i.e., the grout delivery pipeline should extend from the grout agitator or holding tank to the grout pump, then to the injection manifold, and return to the grout agitator tank). With this type of pipeline, the grout can be kept moving and circulating in the delivery pipeline, even when no grout is being injected into the aggregate. Such a system prevents stoppages and clogging of the delivery line. Noncirculating or deadheaded systems should not be used. The delivery line should be kept as short as possible, and the pipe size should be such that normal grout flow velocities range between 2 and 4 ft/s. For most applications, a 1-inch inside diameter (ID) grout line will suffice. All valves used in the grout piping system should be quick opening ball valves that can be readily cleaned.

The simplest piping system is a single recirculating delivery line that is attached via a manifold and valves to a single injection line. The injection line should extend to the lowest point in the form. Multiple injection lines are used for larger projects. Spacing of the injection lines is variable, depending on the form

configuration, aggregate gradation, and other factors, but spacing of 4 to 6 feet is common. In preparing the layout of the grout delivery system, it is normally assumed that the slope of the grout face will be 4:1 for work in the dry and 6:1 for underwater work. Much flatter slopes are common with actual grout surfaces.

Sounding wells constructed from 2-inch ID slotted pipe are installed to allow determination of the level of grout during injection. Similarly, windows can be installed in the forms to allow visual determination of grout levels. The number and location of sounding wells are determined by the size and configuration of the aggregate mass. The ratio of sounding wells to injection pipes should be from 1:4 to 1:8.

Grout injection should begin at the lowest point of the form and continue uniformly until the entire form is filled. After sufficient grout has been pumped to raise the level of grout in the form to about 18 inches above the outlet of the injection line, the injection line can be progressively raised, maintaining about 12 inches of pipe embedment below the level of the grout surface at all times. A great deal of thought and planning is required if multiple injection lines are used. The objective is to entirely fill the form without trapping air or water. Vents must be located where needed, and the injection sequence must be designed to promote complete filling.

It is not possible to use internal vibrators to consolidate preplaced aggregate concrete. External vibrators, however, can be attached to the forms and used advantageously. External vibration will eliminate the splotchy appearance that can occur where coarse aggregate particles contact the forms.

Underwater applications of preplaced aggregate concrete require additional considerations. During injection, grout pumping must continue until an undiluted flow of grout emerges from the top of the form. Formwork is usually closed at the top to prevent washout or dilution of the grout after placement, especially if flowing water is encountered. Anti-washout admixtures might prove useful for underwater applications of preplaced aggregate concrete. Care must be taken when using several different types of admixtures (e.g., anti-washout, pumping aids, or high-range water reducers) to ensure that undesirable combinations are avoided. For example, some anti-washout admixtures can significantly reduce the pumpability benefits of some high-range water reducers.

The minimum volume of the grout mixer tank and the grout agitator tank should be 17 cubic feet. The grout should be mixed using a high-speed centrifugal mixer operating at a minimum of 1,500 rotations per minute. The grout pump should be a progressive cavity pump (commonly known as a “Moyno” grout pump) that is capable of pumping at least 20 gallons of grout per minute at the specified injection pressure. More information about grouting equipment and requirements can be found in Reclamation’s grouting guide specification.

Quality control of preplaced aggregate concrete lies with proper compaction of the aggregate into the forms and maintenance of proper grout consistency throughout the job. Compaction requirements must be satisfied by visual inspection during placement and before grout is introduced into the forms.

(4) Curing

The curing requirements for preplaced aggregate concrete are the same as for replacement concrete (section D.3.a.). Preplaced aggregate concrete placed during underwater applications will normally achieve excellent curing.

c. Shotcrete

Shotcrete, sometimes called gunite, is an application method for concrete. Typically, the concrete materials are selected and proportioned to make application effective. Shotcrete is defined as "mortar or concrete pneumatically projected at high speed onto a surface" (ACI 506R, 2005). There are two basic types of shotcrete: dry mix and wet mix. In dry mix shotcrete, the dry cement, sand, and coarse aggregate, if used, are premixed with only sufficient water to reduce dusting. This mixture is then forced through the delivery line to the nozzle by compressed air. At the nozzle, sufficient water is added to the moving stream to meet the requirements of cement hydration. For wet mix shotcrete, the cement, sand, and coarse aggregate are first conventionally mixed with water, and the resulting concrete is then pumped to the nozzle, where compressed air propels the wet mixture onto the desired surface (figure 104).

Figure 104. Using shotcrete to repair a spillway floor. Shotcrete was used here because of the remoteness of the site.

The two types of shotcrete produce mixes with different water contents and different application characteristics as a result of the distinctly different mixing processes. Dry mix shotcrete suffers high dust generation and rebound losses that vary from about 15 percent to 50 percent. Wet mix shotcrete must contain enough water to permit pumping through the delivery line. Wet mix shotcrete, as a result, may experience significantly more cracking problems due to more water and drying shrinkage. Advances in the development of high-range, water reducing admixtures; pumping aids; and concrete pumping equipment since about 1960 have greatly reduced these problems, and wet mix shotcrete is now used more frequently in repair construction.

Shotcrete is a very versatile construction material (figure 105) that can be readily placed and successfully used for a variety of concrete repair applications. The necessity of form work can be eliminated in many repair applications by using shotcrete. Shotcrete has been used to repair canal and spillway linings and walls, faces of dams, tunnel linings, highway bridges and tunnels, deteriorating natural rock walls, and earthen slopes, as well as to thicken and strengthen existing concrete structures. Provided that the proper materials, equipment, and procedures are employed, shotcrete repairs can be accomplished quickly and economically. However, the apparent ease of application should not lead to the mistaken belief that shotcrete repair is a simple procedure, or one that can be haphazardly or improperly applied. The following two paragraphs contain a very descriptive warning of such practices:

Figure 105. Even though space was limited, due to the complicated geometry of this outlet works, shotcrete was used to make concrete repairs. The shotcrete was later finished to a smooth surface.

> "Regardless of the considerable advantages of the shotcrete process and its ability to provide finished work of the highest quality, a large amount of poor and sometimes unacceptable work has unfortunately occurred in the past, with the result that many design and construction professionals are hesitant to employ the process. As with all construction methods, failure to employ proper procedures will result in inferior work. In the case of shotcrete the deficiencies can be severe, requiring complete removal and replacement.
>
> Deficiencies in shotcrete applications usually fall into one of four categories: failure to bond to the substrate, delamination at construction joints or faces of the application layers, incomplete filling of the material behind reinforcing, and embedment of rebound or other unsatisfactory material." (Warner, 1995)

Each of these deficiencies has occurred on Reclamation repair projects. Perhaps more important with shotcrete than with any other standard concrete repair method, if highly qualified, well trained, and competent personnel cannot be employed, it is advisable to consider using some other repair procedure. The quality of shotcrete closely depends on the skill and experience of one person: the nozzle operator. Reclamation specifications require that only formally certified nozzle operators be employed for shotcrete repairs. Prior to the nozzle operator's arrival at the job, they should obtain necessary on-the-job training to develop the experience and skill needed to obtain certification for Reclamation work.

For repair work that will involve shotcrete, Reclamation's guide specification for shotcrete should be consulted.

(1) Preparation

Concrete to be repaired with shotcrete should be prepared in a manner identical to the preparation required for replacement concrete (section D.3.a.(1)). It is essential that the shotcrete have a clean, sound concrete base for bond.

(2) Materials

Cement used for shotcrete should meet the same requirements as cement used for replacement concrete. For example, if sulfate exposure conditions exist, type V Portland cement should be specified. Normally, however, Type II, low alkali (LA) cement is adequate.

Water, sand, and coarse aggregate used in shotcrete should also meet the requirements shown in Reclamation's shotcrete guide specification in Part II. Likewise, admixtures and additives should meet the requirements in the guide specification. In addition, specialty admixtures can be used to increase strength and reduce shrinkage.

Generally, shotcrete should be proportioned to contain 6- to 8-percent entrained air. It is sometimes desirable to use accelerating admixtures in shotcrete where rapid setting or rapid strength development is required. Calcium chloride accelerators have long been used, but there are now sufficient nonchloride containing accelerators available to make the use of calcium chloride inadvisable. The use of calcium chloride accelerators is particularly unadvisable in shotcrete applications containing reinforcing steel or steel fibers. ACI has published a guide for fiber reinforced shotcrete (ACI 506.1R, 2008), and this document should be consulted if the use of fiber reinforced shotcrete is considered. It should be recognized that application of fiber reinforced shotcrete is more difficult and requires more experienced nozzle operators.

(3) Application

A detailed discussion of shotcrete application techniques and technology is beyond the scope of this Guide; however, ACI has published a recommended practice and a specification for materials, proportioning, and application of shotcrete (ACI 506R, 2005) (ACI 506.2, 2013). In addition, Reclamation has developed guide specifications for using shotcrete. These documents should be consulted before shotcrete repairs are attempted.

(4) Curing

Proper curing of shotcrete is essential if high-strength properties, durability, and long service life are to be obtained. It is important to begin curing by applying approved curing compounds or water spray before there has been evaporative water loss from the shotcrete, particularly during periods of high temperatures, low humidity, or high wind conditions. Improvements in quality and a reduction in potential shrinkage cracking will be obtained by curing for longer periods.

d. Silica Fume Concrete

Silica fume concrete (SFC) is conventional Portland cement concrete that contains silica fume. Silica fume is an ultrafine powder that results from the production of silicon and ferrosilicon alloy. The particles are spherical and extremely fine (on the order of 150 nanometers [nm]). When mixed into Portland cement concrete, silica fume acts as a “super pozzolan.” Concrete that has a low water to cementitious materials ratio and contains 10- to 15-percent silica fume, by weight, of cement can develop 10,000- to 15,000-psi compressive strengths at 28 days’ age, and have a reduced tendency to segregate, very low permeability, and enhanced freeze-thaw and abrasion-erosion resistance.

Special repair techniques are required for restoration of eroded surfaces of spillway or outlet works tunnel inverts and stilling basins. In addition to the usual forces of deterioration, such repairs often must withstand large dynamic and abrasive forces from fast flowing water and, sometimes, from suspended solids. The enhanced abrasion-erosion resistance and high strength of SFC makes it the repair material of choice for these types of repairs (figure 106). Polymer concretes can also be used for this purpose, but they are much more expensive. It should be recognized, however, that the cause(s) of the original damage must be mitigated if a permanent repair is to be achieved. Otherwise, the repair material will be similarly damaged, but should last much longer than the original concrete.

Figure 106. Abrasion-erosion test results showing that the SFC mixture withstood abrasion erosion much better than conventional concrete.

Reclamation's concrete guide specifications provide guidance for SFC. The net water cementitious materials ratio for these mixtures is typically low and should not exceed 0.35, by weight, for achieving high strength. The addition of silica fume to concrete will increase the water requirement, due to the high surface area of the very fine silica fume particles. It is necessary to use a high-range, water-reducing admixture (HRWRA) to obtain the maximum strength and durability with SFC. Because SFC usually has a low water to cementitious materials ratio, it is very important to place and finish SFC quickly, before excessive mix water evaporates and stiffening occurs. The slump gain from the HRWRA commonly offsets some of the "stickiness" of SFC. Depending on the actual compressive strength desired, an air-entraining agent may not be necessary. Set-retarding and extending admixtures have been successfully used when the interval between mixing and placing is quite long. Recently, these high-strength mixtures have been proportioned with a chemical and drying shrinkage reducing additive to reduce cracking with very good results.

SFC can be used for thin or thick repairs. However, because of the types of repairs for which SFC is typically used, it is almost always applied as a thick repair. For thin repairs, it is advisable to place SFC no less than 2 inches thick. SFC requires a very thorough curing procedure, however, and should not be used unless this procedure can be thoroughly accomplished. Otherwise, this repair material is used in accordance with the provisions for conventional replacement concrete.

The silica fume admixture is generally supplied as a densified silica fume powder with or without HRWRA and other dry admixtures. It is sometimes also available in a water slurry with HRWRA and other admixtures.

The densified powder form is currently the most convenient form to ship and use. In this form, the silica fume powder is compacted and densified, so it does not produce nearly as much dust as the undensified form. Because it has been compacted into clumps, sufficient mixing is needed to fully break up and disperse the densified silica fume admixture in the concrete mixture.

As with any concrete mixture, it is essential that trial batches be prepared and tested during mix design to ensure development of the desired concrete properties. Silica fume increases the cohesion or “stickiness” of the concrete, and it can result in workability and finishing problems for workers who are inexperienced in proper finishing techniques. It is recommended that trial placements be performed using similar placement geometries and haul times, along with finishing and curing methods, so that construction personnel can become familiar with the material.

(1) Preparation

Concrete to be repaired with SFC should be prepared in accordance with the requirements of section B.5.

(2) Materials

Materials for SFC are the same as for conventional concrete, except for the addition of the silica fume, the low water to cementitious materials ratio, and the addition of HRWRA to make the mixture workable. Complete material information is provided in Reclamation’s concrete guide specification.

(3) Application

Silica fume concrete must be mixed, transported, and placed in accordance with the procedures for conventional concrete and with the provisions of section D.3.a. and Reclamation’s concrete guide specification.

Silica fume concrete is placed and finished using conventional equipment (figure 57). As previously discussed, placement should take place quickly to allow finishing before drying and stiffening occur. Consolidation and compaction should be accomplished with internal vibrators. Vibrating screeds can be used for larger placements; usually, a single pass of multirow screeds will provide an adequate surface finish. Hand troweling silica fume concrete is usually not very effective, except for small repairs, because it takes too long. There is very little bleed water development after placing SFC. This can result in plastic shrinkage cracking under conditions of elevated temperatures, low humidity, and high wind conditions, which cause rapid water evaporation from the concrete surface (see section (4) below). The use of a long chain, cetyl alcohol, evaporation retarding aid is highly recommended under such conditions.

(4) Curing

Silica fume concrete must be properly cured to achieve a successful repair. As stated above, fresh silica fume concrete has very low or no bleed water development, due to the affinity silica fume has for water and the low water to cementitious ratio of the mix. If the rate of evaporative water loss from the surface of freshly placed silica fume concrete exceeds the rate of bleed water development, plastic shrinkage cracking of the surface will result. Evaporative water loss can be prevented by immediately applying curing compound, covering the fresh concrete with a plastic membrane, water fogging or flooding, or using an evaporation retarder. The common practice with conventional concrete of allowing the development and evaporation of bleed water from the surface prior to beginning curing will almost always result in cracking of silica fume concrete. It is best to begin the curing of silica fume concrete immediately after finishing. Very successful curing of stilling basin repairs has resulted from flooding the repair area with water immediately after the silica fume concrete has attained initial set. Even so, water evaporation from the concrete surface must be prevented prior to flooding. Water soaker hoses can be placed under polyethylene as soon as the concrete has attained initial set, and water should be applied continuously for 14 days. If good proportions are developed, and good placing and curing practices are followed, the repairs should be virtually crack-free.

4. Crack and Water Leak Repairs

Crack and leak repair methods are described below. They are treated separately from other concrete repair methods because they are significantly different from methods for thin or thick repairs. In many ways, properly repairing cracks and leaks can be the most difficult type of repair. In many Reclamation structures, if the concrete cracks, there is also a water leak. In addition, improperly constructed or

deteriorated joints can leak water. As with repairs in general, Reclamation's seven-step process should be followed for crack repairs. In other words, the cause and extent of the cracks or leaks should be determined, including whether the cracks are dormant or active (moving); exposure conditions should be considered, wetting and drying, etc. (section C.11).

There are two basic types of crack repair: (1) resin injection, and (2) adding additional reinforcement. These two methods can be performed separately or in combination. Additional reinforcement is typically added if the shear or tensile capacity of a structural element has been, or might be, exceeded. This can occur if existing reinforcing is somehow damaged (for example, by corrosion), or if loading conditions or design standards have changed (for example, earthquake loads may be higher than originally thought). These types of repairs can be performed a number of different ways, including anchoring posttensioning wires or bars to existing elements (figure 107) or gluing special high-strength fiber mats (glass or carbon, for example) to portions of structures (figure 108). Usually, adding additional reinforcement involves a significant design and construction effort, so a discussion of that repair method is beyond the scope of this document. Reclamation has prepared a guide specification for using carbon fiber reinforced polymer for repair of large-diameter concrete pipe (figure 108). A copy can be obtained from the CGSL.

Figure 107. Adding additional reinforcement to the exterior of a large-diameter siphon.

Figure 108. Installing carbon fiber reinforced polymer to repair a large concrete pipe.

a. Resin Injection

Resin injection is used to repair concrete that is cracked or delaminated, as well as to seal cracks or joints in concrete that is experiencing water leakage. Two basic types of resin injection techniques are used to repair Reclamation concrete: (1) use of epoxy resins, and (2) use of polyurethanes and methacrylic acrylates. Epoxy resins are used to structurally rebond cracks that are dormant and relatively dry, while various polyurethanes and some methacrylic acrylates are used to seal cracks or joints that leak water. It is usually not possible to structurally rebond cracks that are leaking water, are dirty, or are very wet. Also, due to the high cost of resin injection, it is not normally used to repair shallow cracks, drying shrinkage cracks, or pattern cracking. Therefore, if repairs are needed for these types of cracks, a sealing approach is usually more effective.

(1) Epoxy Resins

Epoxy resins cure to form solids with high strength and relatively high modulus of elasticity. These materials bond readily to concrete and are capable, when properly applied, of restoring the original structural strength to cracked concrete. The high modulus of elasticity causes epoxy resin systems to be unsuitable for rebonding cracked concrete that will undergo subsequent movement.

Cracks to be injected with epoxy resins should be between 0.002 inch to 0.25 inch in width. It is difficult or impossible to inject resin into cracks less than about 0.002 inch in width, and it is very difficult to retain injected epoxy resin in cracks greater than 0.25 inch in width, although high viscosity epoxies have been used with some success. Epoxy resin bond strengths can easily exceed the shear or tensile strength of the concrete. If these materials are used to rebond cracked concrete that is subsequently exposed to loads that exceed the tensile or shear strength of the concrete, cracks will likely recur adjacent to the epoxy bond line. In other words, epoxy resin should not be used to rebond "working" cracks.

Epoxy resins will bond with varying degrees of success to wet concrete. There are a number of special techniques that have been developed and used to rebond and seal leaking cracks with epoxy resins. These special techniques and procedures are highly technical and, in most cases, are proprietary in nature. They may have application on Reclamation projects, but only after a thorough analysis has been performed to ensure that the more standard repair procedures will not be successful or cost effective.

Epoxy resins used to rebond concrete should meet the requirements of ASTM C881, "Standard Specification for Epoxy-Resin-Base Bonding Systems for Concrete" (ASTM C881/C881M, 2013). In addition to information in this guide for epoxy resin injection, ACI (ACI 503.7, 2007) provides a guide specification.

(2) Polyurethane and Methacrylic Acrylate Resins

These resins are used to seal and eliminate or reduce water leakage from concrete cracks and joints (Joy, 2013) (von Fay and Joy, 2013). They can also be injected into cracks that experience some degree of movement. Such systems, except the two-part solid polyurethanes, have relatively low strengths and should not be used to structurally rebond cracked concrete.

Cracks to be injected with polyurethane resin should not be less than 0.005 inch in width, while cracks smaller than that can be injected with methacrylic acrylates. Using methacrylic acrylates requires special mixing procedures and stainless steel pumping equipment; however, in some applications, it is very effective at sealing very small leaking cracks, due to its very low viscosity. For more information about using these products on Reclamation facilities, contact staff from the CGSL. No upper limit on crack width has been established for polyurethane resins at the time of publication. For very large cracks, expanding resin can exert enough pressure that extra steps, such as wood wedges or bulkheads, may be needed to contain the grout in the crack. When cracks and voids are injected with these materials, the best results are typically obtained when they are confined, so they cannot freely expand.

Polyurethane materials can also be used to stop high-volume water leaks under some conditions (figure 109). This usually requires gaining control of the water and then injecting resin to plug the leak. Steps for this process are described below. In addition, a novel approach was recently tested, which involved using a solid form of hydrophilic polyurethane that had been ground up into fine particles, and then releasing it in front of a high-volume water leak through a contraction joint in a dam (Starbuck, 2014). Preliminary results using this approach appeared to be successful (figure 110).

Figure 109. High-volume water leaks can be repaired using polyurethane resins.

Polyurethane resins are available that have properties and formulations that vary substantially from one another. Some polyurethanes cure into flexible foams. Other polyurethane systems cure to semiflexible, high-density solids that can be used to rebond concrete cracks that are subject to movement, as long as the movements are not too large. Most of the foaming polyurethane resins require some water to initiate the curing reaction and, therefore, are a natural selection for use in repairing concrete that is exposed to water or wet environments. Currently, there are no standard specifications for polyurethane resins for injecting cracks in concrete that are equivalent to ASTM C-881 for epoxy resins. The lack of

standards, combined with the wide variations in polyurethane properties, means that great care must be exercised in selecting polyurethane resins for concrete repair. "Cookbook" type application of these resins will likely be unsuccessful. The CGSL is continuously evaluating these very useful resin systems. They can provide advice and guidance for field applications on Reclamation facilities if requested.

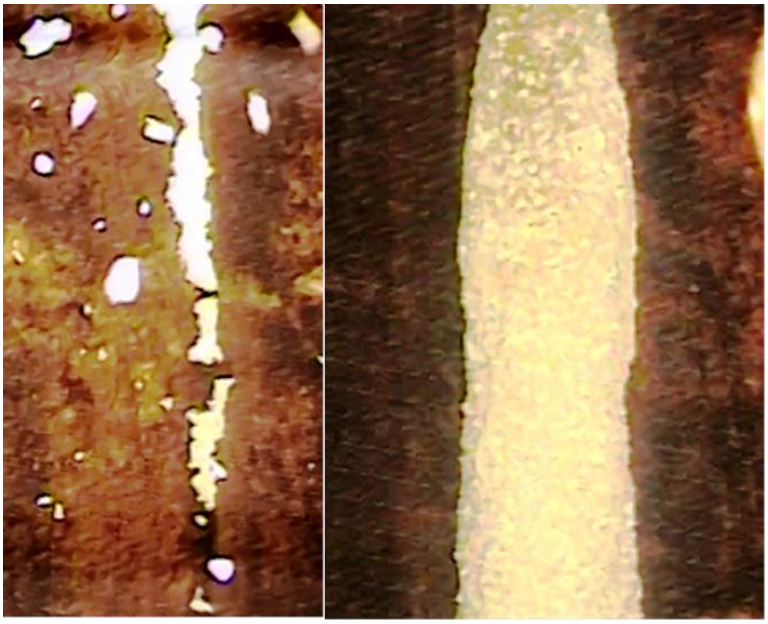

Figure 110. Ground hydrophilic rubber deposited in front of a leaking contraction joint. Left: Particles being pulled into the joint. Right: Particles completely plugging the joint.

(3) Preparation

Cracks, joints, or lift lines to be injected with resin should be cleaned to remove all the contained debris and organic matter possible, including debris next to the crack that may prevent bond of a crack seal coat or may block visibility of the crack (figure 111). Several techniques have been used to clean debris from within a crack, with varying degrees of success. In some cases, blowing oil-free, high-pressure air through a small tube directed at the crack can remove debris (figure 112). For some types of resin injection, once injection holes have been drilled and ports installed, repeated cycles of alternately injecting compressed air, followed by water, have been very useful in flushing and cleaning cracks. For small cracks, ports may need to be drilled or cored with vacuum bits or water wash bits to prevent concrete dust and cuttings from plugging the cracks. Successful use of soaps in the flushing water has been reported by some practitioners. However, complete removal of such materials once they have been injected into cracks is difficult and may create more problems than it is worth. The use of acids to flush and clean cracks is not allowed by Reclamation. Cracks to be structurally repaired using epoxy injection should not normally be injected with water or other liquids. Some epoxy resins will bond to wet concrete, but

they will develop higher bond strength when bonding to dry concrete. Finally, successfully injecting resins into fine cracks that are partially plugged with calcite can be very difficult.

Figure 111. Cleaning the surface of a crack using a small grinder prior to gluing on the port and sealing the face of the crack with epoxy resin.

Figure 112. Using compressed air to clean dust and debris from the crack opening.

When epoxy resin injection is performed, the resin is typically injected directly into the crack opening using glued-on ports (figure 113). For some projects, however, drilled-in mechanical ports may be needed. Once the ports are installed, the crack opening is sealed using a suitable epoxy capping material (figure 114), usually one recommended by the manufacturer of the injection epoxy.

Figure 113. Ports glued to the face of cracks prior to epoxy injection.

Figure 114. Sealing the crack opening for epoxy resin injection after attaching the injection ports.

Because polyurethane resins have relatively high viscosities and fast cure times, resin injection holes are typically drilled on alternate sides of the leak (figure 115), usually at a maximum spacing of 24 inches. The alternating pattern is used to ensure that the crack is intercepted, because the location of the crack underneath the surface is usually unknown. For joints, or areas where the leak path is known, drilling on one side is acceptable. In these situations, installing ports directly into a joint may also be acceptable under certain circumstances (for example, leaking concrete pipe joints). For angled holes, the holes are drilled offset from the leak opening to intercept the crack at a depth of 8 to 24 inches (as concrete thickness allows, these holes should extend as deeply as possible), or at the midpoint of the thickness for thinner sections.

Figure 115. Drilling an injection hole to intercept the leak several inches from the face for polyurethane resin injection.

Once the holes are drilled, ports can be installed (figure 116). Injection ports of various designs may be installed in the drilled holes, depending on the injection plan and the presence of flowing water. For polyurethane resin injection, the joint or crack openings do not always need to be sealed because these resins usually cure quickly. Sealing is typically only done if the water leaks are large enough to wash the resin out before it cures, or if the opening is so large that the resin is not constrained. If the joint or crack needs sealing due to high waterflows, special steps are needed to slow the waterflows (see section (6)(b), below). If the opening is so large that the resin is not adequately contained, then special jute or open cell backer rod (figure 117) can be soaked in resin and pushed into the joint or crack to form a bulkhead. For very large cracks, additional steps may be needed to contain the grout.

Figure 116. Ports placed into holes for injecting polyurethane resin into a leaking expansion joint in a powerplant deck. The holes are drilled to intercept the joint between the rubber waterstop and an embedded metal plate.

Figure 117. Placing resin soaked jute or open cell backer rod into large cracks or joints can help contain the polyurethane injection resin for large cracks and joints.

(4) Materials

Epoxy resin used for crack injection should be a 100-percent solids resin meeting the requirements of ASTM C-881 for Type I or IV, Grade 1, Class B or C (ASTM C881/C881M, 2013). If the purpose of injection is to restore the concrete to its original design load bearing capabilities, a Type IV epoxy should be specified and used. If the purpose does not involve restoration of load bearing capabilities, a Type I epoxy is sufficient. Solvents or unreactive diluents should not be mixed into the resin.

As stated above, there are many types of polyurethane resins. Reclamation almost exclusively uses water activated, single component hydrophilic or hydrophobic resins. Accelerators and catalyst may be used to adjust the reaction rate. Elastomeric polyurethanes are two component, and they do not require water to react. Reclamation typically uses these polyurethanes only in special circumstances (for example, to fill voids behind steel draft tube liners, or to plug high-volume water leaks), so they will not be discussed further. Polyurethane resins can react and harden within 1 minute to several minutes, and they can expand significantly or only slightly, depending on formulation and confinement.

Hydrophilic resins require water to react, typically at a water-to-resin ratio of 1:1, but that ratio can be as high as 20:1. Depending on the amount of water used for the reaction, the end product will be either a foam (1:1 to about 5:1 mix ratios) or a gel (5:1 and higher mix ratios). A potential problem with hydrophilic foams is shrinkage in dry conditions. If the final product is not in a high relative humidity environment or in contact with water, shrinkage will occur due to water evaporating from the cured grout. After drying and shrinking, many products will swell after additional exposure to moisture. Many products can go through multiple wet-dry cycles, but the effectiveness of the products may be negatively impacted after several of these cycles.

Hydrophobic resins require little water to react. These products consist of a resin mixed with a small amount of catalyst, and they require a small amount of water to propagate the reaction. Adding some additional water does not appreciably change the reaction, but it may lower the quality of the final product.

The difference between some modern and historical hydrophobic polyurethanes lies in the final product. Traditionally, hydrophobic resins produced foams that were very stiff and not very flexible. Today, there are hydrophobic resins available that produce a flexible foam, much like hydrophilic resins. This can be advantageous because the final product will not shrink very much in a dry environment, whereas hydrophilic grouts will shrink. This leads to a much larger product base to choose from for a given project. One major difference to consider is cost. While the base resin prices are similar for hydrophilic and hydrophobic

resins, hydrophilic resins are injected with equal amounts of water at a minimum, which reduces material costs substantially.

Water activated polyurethane resin used for crack injection should be composed of 100-percent polyurethane resin as one part, and water as the second part. The polyurethane resin, when mixed with water, should be capable of forming either a closed cell, rigid or flexible foam, or a cured gel, depending on the specific resin used and the water to resin mixing ratio. However, the resin should, with appropriate water to resin mixing ratios, result in a cured resin foam with properties that match the crack characteristics and exposure conditions. For example, for cracks that are moving significantly or leaking joints, strong bond, tensile strength, and high elongation will be needed. If the crack will dry out, then hydrophobic grouts should be considered. Contact manufacturers for specific recommendations and certification that their product meets job requirements before accepting the injection resins for use on a project.

As stated earlier, there are many, many types of resins and application methods available for crack repair. Because of this, CGSL staff should be consulted about their use on Reclamation projects.

(5) Injection Equipment

Resins can be injected with many types of equipment. Small repair projects can be performed using caulk cartridge-type equipment (figure 118), and several firms make their products in cartridges for such application. Airless paint sprayers, paint pressure pots, and a variety of specialized pumps are examples of the equipment that is available.

Small projects that employ epoxy resin can use any system that will successfully deposit the epoxy in the required area. For these systems, the epoxy components are mixed together and then poured into the injection equipment (figure 119). Once mixed, the epoxy must be injected before it starts to thicken. Longer pot life epoxies should be used for this technique.

Large epoxy injection projects generally require a single-stage injection method by which the two epoxy components are pumped independently from their separate reservoirs to the mixing nozzle. At the mixing nozzle, the epoxy components are mixed and then injected. The epoxy used with this injection technique must have a low initial viscosity and a closely controlled set time. Several firms have proprietary epoxy injection systems (figure 120) that work very well.

Figure 118. Two-component cartridge system for injecting resin into cracks.

Figure 119. A small pressure pot for injecting mixed epoxy resin into a crack.

Figure 120. A resin injection system specifically manufactured for injecting epoxy resins.

Many polyurethane resins have a much shorter pot life after mixing than epoxies. As stated earlier, there are many types of pumps that can be used for polyurethane resin injection (Joy, 2013), depending on the resin being used. Polyurethane injection equipment varies from small, hand-operated pumps to full-size commercial equipment capable of discharging many cubic feet of resin per hour (figures 121, 122, and 123). Use of high-quality, polyurethane resin injection equipment is always recommended as a first choice.

For hydrophilic and two-component (elastomeric) resins, Reclamation usually requires that the resins be prepared and injected with multiple component, single-stage equipment. In some special situations, commercial grade airless paint sprayers can be connected together for injecting multiple components. With this method, it can be difficult to control injection pressures, and the resin components must be in graduated containers to ensure that the components are being properly proportioned. Pressures of the individual pumps may need to be adjusted to ensure proper proportioning. Only very experienced personnel should be allowed to perform polyurethane injection on a Reclamation project with equipment designed for, or adapted from, other operations.

These resins should always be mixed and injected with the appropriate amount of water or other components necessary to achieve the desired final product. Using existing water in the leaking joint or crack as mix water for hydrophilic resin is almost never allowed because it would be nearly impossible to ensure adequate mixing in the joint or crack.

Figure 121. Hand-operated pump used to inject resin in difficult access areas.

Figure 122. Airless paint sprayers can be used for some injection applications. However, personnel who use such equipment need to be well versed in their use for proper resin injection work.

Figure 123. A high-pressure resin injection pump capable of injecting two components and water.

The pumping pressure required of polyurethane injection equipment may exceed 2,000 psi. However, because the resin is fairly viscous, the pressures typically dissipate within a very short distance of the injection point. On one recent job, an impromptu pressure test was performed. Pressures were monitored in an adjacent port located about 2 feet from the injection port. No pressure was registered on the adjacent ports, even though injection pressures approached 800 psi for a short time.

(6) Application

The success of resin injection repair projects is directly related to the experience and knowledge of the injection contractor. Reclamation requires that an injection contractor have a minimum of three similar projects within the last 5 years. However, Reclamation may accept an injection contractor who has not had the required experience provided that the work is performed under technical supervision of the injection resin manufacturer, and provided that the manufacturer has a minimum of 10 years of experience providing resins for applications similar to those specified.

(a) Application of Epoxy Resin by Pressure Injection

The objective of epoxy resin injection is to completely fill the crack or delamination being injected and retain the resin in the filled voids until it has

cured. The first step in the resin injection process is to thoroughly clean the concrete surface in the vicinity of the cracks of all loose or deteriorated concrete and debris. The area of injection is then inspected, and the injection port location pattern is established. Several different types of injection patterns can be used and are discussed below:

- If the cracks are clearly visible and relatively open, injection ports can be installed at appropriate intervals by installing the ports directly onto the crack surface. The ports can be glued directly on the surface if the surface is high quality and the injection pressures are not too high (generally less than 400 psi). If the surface is not of high quality and/or the injection pressure will be high, then mechanical ports can be installed in holes that are drilled into the crack from the crack opening or angled in from the side of the crack, similar to polyurethane resin injection techniques (see below). When drilling the ports, care should be taken to prevent drilling debris and dust from blocking or sealing the openings. Special vacuum drill bits and water swivel chucks are available for this work. The surface of the crack between ports is then sealed with epoxy paste, and the paste is allowed to cure. For vertical cracks, epoxy injection begins at the lowest elevation port and proceeds along and up the crack to the highest port.

- A sometimes more effective but more time-consuming method is to drill holes on alternate sides of the crack, angled to intersect the crack plane at an appropriate depth below the surface. This method ensures that the crack will be intersected, even if it strikes or dips in unexpected directions. The top surface of the crack is then sealed with epoxy paste, and injection is accomplished as described above.

Many times, multiple adjacent ports can be injected at the same time (figure 124). Usually, better results are obtained by using lower injection pressures and allowing more time for the epoxy to fill cracks and voids. It is important to match injection time to pot life. The use of high injection pressures may be quicker, but it can result in flow blockage and incomplete filling. Whenever injection quantities are higher than expected, work should be stopped until a reason for the higher quantities is found. The perimeter of repair areas should be observed to ensure that the epoxy resin is not traveling to an area where it is not desired. When injection is completed at a port or ports, the injected ports are capped or closed. Tracking the progress of resin injection is usually possible by observing nearby ports that have not been capped or closed.

The best method to ensure quality epoxy injection work is to require the contractor to prepare and submit for approval the overall, detailed injection plan and then to obtain small-diameter cores from the injected concrete to verify filling of the crack or voids. If more than 90 percent of the voids in the cores are filled with hardened epoxy, the injection can be considered complete. If injection is not complete, the contractor should be required to reinject the concrete and obtain

additional cores. In addition, observing the crack directly underneath the injection port, after injection has been completed, can provide an indication of success of the injection (figure 125).

Figure 124. Simultaneous injection of multiple injection ports for epoxy injection.

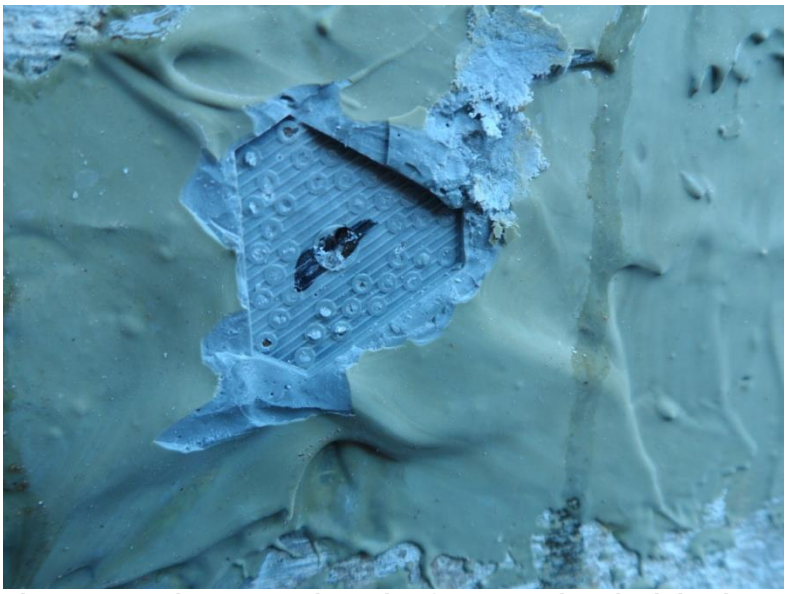

Figure 125. The exposed crack, after removing the injection port, is filled with cured epoxy.

(b) Application of Polyurethane Resin by Pressure Injection for Sealing Leaks

The basic procedure for polyurethane injection consists of first gaining control of the leaking water if leaks are high, followed by pressure injecting resin to seal the cracks.

For high-volume flows, the first step is to gain control of the waterflow. There are several ways this can be done. For example, one method involves drilling holes to intercept the flow paths as far as possible from the concrete surface. For this method, valved ports, known as "wall spears" (figure 126), are installed in the drilled holes, opened, and used to relieve water pressure in the cracks or joints near the surface. The cracks or joints are then temporarily sealed with wood wedges, or resin soaked jute rope or open-cell backer rod, to prevent excessive loss of injection resin. For other situations, it may be necessary to inject a very fast-setting resin behind the leak to slow down the flow, and then proceed with standard grouting practices.

Figure 126. There are a wide variety of ports available for resin injection, including hammer-in ports, mechanical ports, and twist-in wall spears.

Another method to seal large waterflows is to intermittently inject resin into a port. With this technique, a preselected quantity of resin is slowly injected into a port, followed by a waiting period before repeating the injection. Several cycles of injection may be necessary to control and seal large waterflows. Once there is sufficient control of the waterflow, leak sealing may begin.

For lower volume waterflows, the resin may cure so quickly that no special steps are necessary to control the flow. In this case, it is fairly easy to judge the effectiveness of the grouting because the leaking will slow or cease as grouting proceeds.

Polyurethane resin injection should occur according to a preplanned sequence (figure 127). Injection pressures should be the minimum pressures necessary to accomplish resin travel and void filling. Even so, pump pressures of 1,500 to 2,000 psi are common in this work. Each injection hole should be closed by using ports that will maintain injection pressure for a period of 10 to 15 minutes after injection flow has ceased or the resin has cured. However, holding high pressures on some resins (over about 300 to 400 psi) will prevent them from curing properly.

Figure 127. Grouting is progressing from one end of the leaking expansion joint to the other. The presence of foam indicates that the joint is full of grout. The grout is contained by packing the joint with jute from below, the joint sealant at the top of the joint, and the zerk fittings on the ports.

Maintaining confinement is almost always necessary to ensure that the foam attains maximum density in the crack or joint and becomes a permanent repair. Allowing the resin to free foam will result in a low-density, poor quality product. If such a procedure is followed, the poor quality, low-density foam can be pushed out of the crack or joint system by hydrostatic pressure, and repeat injection will be required to seal the resulting leakage.

For some types of leak sealing work, it is not unusual for new leaks to appear as the old leaks are sealed. This occurs because the water travels to the most open path first, and once it is blocked, the water will start leaking out of the next easiest path, if one is available. In this case, new ports and additional injection may be necessary.

Hydrophobic resins are usually not mixed with water before injection because it takes little water to start the resin's reaction. Small, wet cracks and voids usually contain enough moisture to begin the reaction process. Small dry cracks, on the other hand, can be injected with water before resin is injected. This practice, however, can lead to very poor results for large cracks, joints, and voids. In some situations, insufficient water is present to properly cure the resin, so only the outer area of the resin is reacted. In other cases, there may be plenty of water available, but there is insufficient mixing, so the resin only reacts on exposed surfaces. This results in a reacted outer surface and unreacted interior resin, which is sometimes referred to as "egg-shelling." When this occurs, the leak repair will usually be unsuccessful or will fail prematurely. In these cases, intermittently injecting a small amount of water into the grout stream may produce enough mixing to get the resin to cure properly.

Hydrophilic polyurethane resin can be injected with varying water to resin ratios. If waterflow is high, it may be desirable to inject water to resin ratios as low as 0.5:1. To accomplish this, variable ratio pumps are needed. Alternatively, the water and resin may be introduced and mixed in a "residence tube" of sufficient length before the point of injection so the foaming reaction may be well underway upon entering the crack or joint network.

Special downhole packers can be used to inject resin at points deep within a structure. These special packers (figure 128) provide tubes to keep the resin components separate until they reach the end of the packer, where they are mixed together with a static mixer.

Figure 128. A large packer for injecting resin through a drilled hole. The packer is about 3 inches in diameter and 4 feet long.

The necessity of using experienced injection contractors or technical advisors for work of this nature cannot be overemphasized.

(7) Cleanup

At the completion of resin injection, all injection ports, excess resin, and crack surface sealers should be removed from surfaces that are visible to the public. This can be accomplished by scraping, high-pressure water blasting, or grinding. The use of dry pack mortar or other replacement repair material should be used to fill injection holes.

E. Nonstandard Methods of Repair

1. Use of Nonstandard Repair Methods

The standard concrete repair methods and materials discussed in chapter D will meet many concrete repair needs. There will be occasions, however, resulting from unusual causes of damage and exposure conditions or special repair needs, when the standard repair methods may not meet the performance needs. In these instances, nonstandard repair methods may be required.

Repair materials are considered nonstandard if they have not been thoroughly tested and evaluated for Reclamation applications. Many times, the use of packaged, thin repair materials (section D.2.f.) falls into this category because there are so many of them available, with many different formulations. The use of such materials involves a certain element of risk because the performance characteristics of these materials are unknown, may be variable, or are not fully defined. The application of nonstandard materials can be justified only when it is determined that no standard repair material will work, and only if all parties associated with, or responsible for, accomplishing the repairs understand the risks and agree to accept the uncertainties and possible consequences.

An example of a situation that required the use of nonstandard concrete repair methods was when repairs were needed on small areas of concrete damage on a cold, wet tunnel spillway that was subject to cavitation flows in the event of a spill. No standard repair method exists for such shallow repairs in areas exposed to these conditions. Therefore, in this situation (and in others), it was undesirable to remove sound concrete to a sufficient depth for a standard repair. In addition, it would be very expensive to gain access to make the repairs. Therefore, facility personnel decided it was cost effective to use funds to conduct a study to evaluate potential materials that would be suitable for placement and curing under the cold temperatures and damp conditions in the spillway tunnel (von Fay K., 2009). Of the many materials evaluated, two epoxy mortars and two cementitious mortars showed promise. After further testing, one cementitious mortar was selected for application. In this example, the facility personnel were informed about the risks associated with using an unproven repair material. With the information gathered

from the study, a sound decision could be made that the benefits of performing the shallower repairs would outweigh the uncertainties associated with unproven performance.

a. Preparation

Preparing concrete for repair with nonstandard materials should be in accordance with section B.5, unless otherwise required by the material manufacturer. The recommendations of the manufacturer should be closely followed.

b. Materials

Nonstandard repair materials will usually be proprietary or commercial products. Manufacturer's technical representatives should be contacted and made fully aware of the nature of the problem and the reasons for selecting nonstandard repair materials. They need to be informed of any factors that affect the repair plan, such as the need to perform repairs on an emergency basis, or the need to coordinate and schedule repairs at facilities that can only be taken out of service at certain times. Copies of material warranties should be obtained if available. Technical representatives should be questioned closely about the conditions under which their materials would not be suitable for use, or when the materials warranties would not apply. The manufacturer should be able to supply case studies or project histories showing that their materials were used to repair similar damage. However, if the manufacturer makes claims that seem too good to be true; for example, that no surface preparation is needed, the claims are likely not true.

c. Application

Application of nonstandard repair materials must be made in exact conformance to the manufacturer's recommendations. Failure to apply the materials properly will void any warranties and is a commonly cited reason for material failure. Construction inspection reports should closely note any contractor variance from the manufacturer's recommended application procedures.

d. Curing

Curing of nonstandard repair materials must be performed as recommended by the materials manufacturer.

Bibliography

ACI 201. 2008. Guide to Durable Concrete. ACI 201.2R-08. Farmington Hills: American Concrete Institute.

ACI 222R-01. 2010. *Protection of Metals in Concrete Against Corrosion*. Reapproved 2010. Farmington Hills: American Concrete Institute.

ACI 224. 2013. *Cracking.* Farmington Hills: American Concrete Institute.

ACI 228.1R. 2003. *In-Place Methods to Estimate Concrete Strength.* Farmington Hills: American Concrete Institute.

ACI 228.2R. 2013. *Report on Nondestructive Test Methods for Evaluation of Concrete in Structures.* Farmington Hills: American Concrete Institute.

ACI 304.1. 2005. *Guide for the Use of Preplaced Aggregate Concrete for Structural and Mass Concrete Applications.* ACI 304.1-92 - Reapproved 2005. Farmington Hills: American Concrete Institute.

ACI 318. 2013. *Building Code Requirements for Reinforced Concrete.* Farmington Hills: American Concrete Institute.

ACI 364.1. 2007. *Guide for Evaluation of Concrete Structures Before Rehabilitation*. Farmington Hills: American Concrete Institute.

ACI 364.3R. 2009. *Guide of Cementitious Repair Material Data Sheet.* Farmington Hills: American Concrete Institute.

ACI 503.7. 2007. *Specification for Crack Repair by Epoxy Injection*. Farmington Hills: American Concrete Institute.

ACI 503R. 1993. *Use of Epoxy Compounds with Concrete*. Farmington Hills: American Concrete Institute.

ACI 506.1R. 2008. *Guide to Fiber-Reinforced Shotcrete*. Farmington Hills: American Concrete Institute.

ACI 506.2. 2013. *Specification for Shotcrete*. Farmington Hills: American Concrete Institute.

ACI 506R. 2005. *Guide to Shotcrete*. Farmington Hills: American Concrete Institute.

ACI 515. 2013. *Guide to Selecting Protective Treatments for Concrete.* Farmington Hills: American Concrete Institute.

ACI 543.3R. 2006. *Guide for the Selection of Materials for the Repair of Concrete*. Farmington Hills: American Concrete Institute.

ACI 562. 2013. *Code Requirements for Evaluation, Repair, and Rehabilitation of Concrete Buildings* (and commentary). Farmington Hills: American Concrete Institute.

Aitken, C.T., and Litvin, G.G. 1989. "Laboratory Investigation of Concrete Sealers." *Concrete International: Design and Construction,* Vol. 11, No. 11, p. 37-42.

Al-Otoom, A., Al-Khlaifa, A., and Shawaqfeh, A. 2007. "Crystallization Technology for Reducing Water Permeability into Concrete," *Ind. Eng. Res.*, American Chemical Society, p. 5463-5467.

ASTM C881/C881M. 2013. *Standard Specification for Epoxy-Resin-Base Bonding Systems for Concrete.* West Conshohocken: American Society for Testing and Materials.

Atimay, E., and Ferguson, P. 1974. "Early Chloride Corrosion of Reinforced Concrete - A Test Report," *Materials Performance*, Vol. 13, No. 12, p. 18-21.

Attanayaka, U., Aktan, H., and Ng, S. 2002. *Criteria and Benefits of Penetrating Sealants for Concrete Bridge Decks.* Research Report RC-1424, Lansing: Michigan Department of Transportation.

Beeby, A.W. 1978a. "Corrosion of Reinforcing Steel in Concrete," *The Structural Engineer*, Vol. 56A, No. 3., p. 77-81.

Beeby, A.W. 1978b. *Concrete in the Oceans—Cracking*. Department of Energy, London: CIRIA/UEG, Construction Industry Research and Information Association.

Bissonnette, B., Vaysburd, A.M., and von Fay, K.F. 2012. *Best Practices for Preparing Concrete Surfaces Prior to Repairs and Overlays*. MERL 12-17, Denver: Bureau of Reclamation.

Bissonnette, B., Vaysburd, A.M., and von Fay, K.F. 2013. *Moisture Content Requirements for Repair Part 1: Concrete Repair Testing.* Report No. MERL-2013-63, Denver: Bureau of Reclamation.

Bureau of Reclamation. 1942. *Alkalies in Cement and their Effect on Aggregate and Concretes.* Report No. Ce40, Denver: Bureau of Reclamation.

Bureau of Reclamation. 1975. *Concrete Manual.* Denver, Colorado: Technical Service Center.

Bureau of Reclamation. 2003. "IV International Workshop - Bringing the Concrete Repair Industry into a New Era of Sustainable Development." Summary of Workshop, A.M. Vaysburd, K. von Fay, and D.F. Burke (eds.). San Diego, California.

Bureau of Reclamation. 2006. *Lake Sheburne Dam, Appurtenant Works Rehabilitation, Milk River Project, Montana.* Vol. Contract No. 07CC603360.

Bureau of Reclamation. 2009. Yellowtail Afterbay Dam Rehabilitation. Vol. Solicitation No. R10PS60025.

Bureau of Reclamation. 2012. G22, 23, and 24 Overhaul, Grand Coulee Third Powerplant. Solicitation No. R10PS10048.

Bureau of Reclamation. 2014. *Standard Protocol to Evaluate the Performance of Corrosion Mitigation Technologies in Concrete Repairs, M-82.* M0820000.714. Denver.

Concrete Society. 1992. Technical Report No. 22. Third Edition.

Darwin, D., Manning, D., and Hognestad, E. 1985. "Debate: Crack Width, Cover, and Corrosion," *Concrete International*, Vol. 20, No. 35.

Emmons, P. 1994. *Concrete Repair and Maintenance Illustrated*. Kingston, Massachusetts: R.S. Means Company, Inc.

Emmons, P.H., and Sordyl, D.J. 2006. "The State of the Concrete Repair Industry and a Vision for its Future," July/August, *Concrete Repair Bulletin*, p. 7-14.

Emmons, P.H., and Vaysburd, A.M. 1995. *Performance Criteria for Concrete Repair Materials, Phase 1*. Technical Report REMR-CS-47, Vicksburg: U.S. Army Engineer Waterways Experiment Station.

Emmons, P., and Vaysburd, A. 1993. "Factors Affecting Durability of Concrete Repairs - The Contractor's Viewpoint," *Proceedings of the Fifth International Conference on Structural Faults and Repairs*, p. 253-268, Edinburgh, UK.

Giannini, E., K. Folliard, J. Zhu, O. Bayrak, Z. Keeitmaan, Z. Webb, et al. 2012. *Non-Destructive Evaluation of In-Service Concrete Structures Affected by Alkali-Silica Reaction (ASR) or Delayed Ettringite Formation (DEF).* Final Report, Part 1, University of Texas at Austin, Center for Transportation Research, Austin, Texas.

Goodwin, F. 2008. "Renovation of the Concrete Repair Industry," March/April, *Concrete Repair Bulletin*, 7-14.

Hurcomb, D. 2006. *Petrographic Examination of Stoplog Guide Grout.* Petrographic Referral Code 05-02. Denver: Bureau of Reclamation.

ICRI 210.3. 2004. *Guide for Using In-Situ Tensile Pull-Off Tests to Evaluate Bond of Concrete Surface Materials*. Rosemont: International Concrete Repair Institute.

ICRI 310.2R. 2014. *Selecting and Specifying Concrete Surface Preparation for Sealers, Coatings, Polymer Overlays and Concrete Repair.* Farmington Hills: International Concrete Repair Institute.

ICRI 320.2R. 2009. *Guide for Selecting and Specifying Material for Repair of Concrete Surfaces*. Farmington Hills: International Concrete Repair Institute.

ICRI 320.3R. 2012. *Guideline for Inorganic Repairs Material Data Sheet Protocol.* Farmington Hills: International Concrete Repair Institute.

Jian-Guo Dai, Y.A. 2010. "Water Repellent Surface Impregnation for Extension of Service Life of Reinforced Concrete Structures in Marine Environments: The Role of Cracks," *Cement and Concrete Composites*, 101-109.

Joy, W. 2013. *Guide to Chemical Grouting of Joints and Cracks in Concrete*. Technical Memorandum No. MERL-2013-58, Denver: Bureau of Reclamation.

Klein, M. 2014. Close-Range Aerial Cameras for Photogrammetry. Presentation September 4, 2014, San Francisco, California: American Concrete Institute, Strategic Development Council.

Madera, V., and Joy, W. 2014. Effects of Chemical Admixtures of Cementitious Grouts. MERL-2014-23, Denver: Bureau of Reclamation.

Martin, H., and Schiessel, P. 1969. *The Influence of Cracks on the Corrosion of Steel in Concrete.* Preliminary Report, RILEM International Symposium on the Durability of Concrete, Prague.

Morency, M., Vaysburd, A., Bissonnette, B., and von Fay, K. 2007. "Surface Preparation of Concrete for Repair." 11th RILEM-TC-RLS 189, *Bonded Cement-Based Material Overlays for the Repair, the Lining, or the Strengthening of Slabs or Pavements*, Liege, Belgium.

Morency, M., Vaysburd, A., von Fay, K., and Bissonnette, B. 2005. *Development of a Test Method to Evaluate Cracking Tendency of Repair Materials.* Phase 1 Report, Research Report 2004-1, Concrete Repair Engineering and Experimental Program (CREEP), Denver: Bureau of Reclamation.

Naval Facilities Engineering Service Center. 2001. *Improving the Performance of Repaired Concrete Structures, Summary of Workshop.* A.M. Vaysburd, B. Bissonnette, and D.F. Burke (eds.). Special Project SP-2123-SHR, Quebec City, Canada: Naval Facilities.

NIST. 1995. *Research Needs for Establishing Material Properties to Minimize Cracking in Concrete Repairs.* A.M. Vaysburd (ed.), Gaithersburg, Maryland: National Institute of Standards and Technology.

NIST. 1999. *Predicting the Performance of Concrete Repair Materials, Summary of Workshop.* A.M. Vaysburd, N.J. Carino, and B. Bissonnette (eds.), NIST IR 6402, Durham, New Hampshire: National Institute of Standards and Technology.

Oesterle, R. 1997. *The Role of Concrete Cover in Crack Control Criteria and Corrosion Protection*. RD Serial No 2054, Skokie: Portland Cement Association.

Pepin, R. 2015. *Coatings for Concrete*. Report No. MERL 2015-01, Denver: Bureau of Reclamation.

Price, W. 1981. In the Beginning. Concrete Laboratory Technical Conference, Denver: Bureau of Reclamation.

Raphael, M., and Shalon, R. 1971. *A Study of the Influence of Climate on Corrosion of Reinforcement.* RILEM Symposium on Concrete and Reinforced Concrete in Hot Countries, Building Research Station, p. 77-96, Haifa, Israel.

Smoak, G. 1996. Guide to Concrete Repair. Denver: Bureau of Reclamation.

Smoak, G.W. 1991. "Repairing Abrasion-Erosion Damage to Hydraulic Concrete Structures," June, *Concrete International*, Vol. 3, No. 6.

Smoak, G.W., and Husbands, T.B. 1996. *Results of Laboratory Tests on Materials for Thin Repair of Concrete Surfaces.* REMR-CS-52, Vicksburg: U.S. Army Corp of Engineers, Waterways Experimental Station.

Starbuck, W. 2014. *Sealing Leaking Contraction Joints.* Science and Technology Project ID: 3191, Technical Memorandum No. MERL-2014-96, Denver: Bureau of Reclamation.

Stark, D., and DePuy, G. 1995. Investigations of Alkali-Silica Reactivity in Five Dams in the Northwestern United States. Report No. R-95-05, Denver: Bureau of Reclamation.

Tremper, B. 1947. "The Corrosion of Reinforcing Steel in Cracked Concrete," *ACI Journal, Proceedings,* Vol. 43, p. 1137-1144, American Concrete Institute.

U.S. Army Corps of Engineers. 1995. *Evaluation and Repair of Concrete Structures*. Engineer Manual, EM 1110-2-2002, Washington, DC.

Vaysburd, A.M., Bissonnette, B., von Fay, K.F., and Morin, R. 2015. "The Compatibility in Concrete Repair - Random Thoughts and Wishful Thinking," *Proceedings, 4th International Conference on Concrete Repair, Rehabilitation and Retrofitting,* ICCRRR IV, October 5-7, p. 5, Leipzig, Germany.

Vaysburd, A., Bissonnette, B., and von Fay, K.F. 2014. *Compatibility Issues in Design and Implementation of Concrete Repairs and Overlays*. Project ID: 0385, Report No. MERL-2014-87, Denver: Bureau of Reclamation.

Vision 2020. 2006. *Vision 2020 - A Vision for the Concrete Repair, Protection, and Strengthening Industry.* Version 1, June.

von Fay, K.F. 2007. *Laboratory Evaluation of Joint Sealants for Spillway Joints.* Memorandum, MERL-07-23, Denver: Bureau of Reclamation.

von Fay, K.F. 2009. *Laboratory Evaluation of Concrete Thin Repair Materials - Yellowtail Dam Spillway Tunnel Repairs*. MERL-2009-36, Denver: Bureau of Reclamation.

von Fay, K.F. 2011. *Evaluation of New Concrete Shrinkage Reducing Additive for Glen Elder Dam Spillway Inlet Slab Repair*. Memorandum, MERL 2011-34, Denver: Bureau of Reclamation.

von Fay, K.F., and Joy, W. 2013. "Repairing Leaking Expansion Joints at Reclamation Facilities," March/April, *Concrete Repair Bulletin,* p. 18-21.

von Fay, K.F., and Pepin, R. 2013. Concrete Sealers Scoping Study. Science and Technology Project, Denver, Colorado: Bureau of Reclamation.

von Fay, K.F., Morency, M., Bissonnette, B., and Vaysburd, A.M. 2009. *Development of Test Methods to Evaluate Cracking Tendency of Repair Materials - Field Study Phase II.* MERL Research Report 2009-1, Concrete Repair Engineering Experimental Program, Denver: Bureau of Reclamation.

von Fay, K., Dolen, T., and Scott, G. 2004. "Effects of Concrete Deterioration on Safety of Dams: the U.S. Bureau of Reclamation Experience," *Proceedings of the First International Conference on Innovative Materials for Technologies for Construction and Restoration*, Vol. 1, Lecce, Italy.

Warner, J. 1995. "Understanding Shotcrete - The Fundamentals," May, *Concrete International Magazine*, Vol. 17, No. 5.

Guide to Concrete Repair

Part I: Appendix A

Historic Development of Durable Concrete for the Bureau of Reclamation

Appendix A

Historical Development of Durable Concrete for the Bureau of Reclamation

Timothy P. Dolen
Edited for the *Guide to Concrete Repair b*y Kurt F. von Fay

Introduction

The Bureau of Reclamation (Reclamation) infrastructure stretches across many different climates and environments in the 17 Western States. Many of the dams, spillways, pumping plants, powerplants, canals, and tunnels are constructed with concrete. These structures were built from Arizona to Montana, across the plains, and in the mountains and deserts. Concrete structures have had to remain durable to resist both the design loads and the natural environments of the Western climate zones. Many natural environments can be quite destructive to concrete, and the earliest Reclamation projects were faced with a variety of durability problems. The state-of-the-art of concrete construction advanced from hand mixing and horse and wagon transporting operations to automated mixing plants, underwater canal construction, and pumping and conveyor placing. This appendix begins with an overview of the challenges that have faced concrete construction beginning in the 20th century. It then traces Reclamation's role in the development of durable concrete to resist the environments of the West.

What is Concrete?

The American Concrete Institute (ACI) defines concrete as "a composite material that consists essentially of a binding medium within which are embedded particles or fragments of aggregate, usually a combination of fine aggregate and coarse aggregate; in Portland cement concrete, the binder is a mixture of Portland cement and water."[1] The earliest concretes date at least as far back as early Roman times, including the aqueducts and the historic Pantheon in Rome. These concretes did

[1] American Concrete Institute, ACI 116R, *Report on Cement and Concrete Terminology*, Farmington Hills, Michigan, 2001.

not use Portland cement as a binder; rather, they used combinations of lime and pozzolanic sands that were mixed with broken rocks and shards of pottery.

Most modern concrete is composed of about 75-percent aggregates, by volume, and about 25-percent "Portland cement paste." The paste is the binder and contains cementitious materials and water. The cementitious materials include primarily Portland cement and sometimes an additional cementing material, such as a pozzolan. Pozzolans are finely ground, calcined (heated to a high temperature) materials that react with lime from cement hydration to form compounds similar to Portland cement. Natural pozzolans are formed by events like volcanoes. Artificial pozzolans, such as fly ash, are calcined in a kiln. The ratio of water to cementitious materials is about 1.5:1 by solid volume, or 1:2 by weight. The individual components are mixed wet for about 5 to 10 minutes and then are placed in forms to harden into their final shape.

Concrete does not harden by drying, as do some clay bricks and lime mortars. The chemical process that turns the wet concrete into a hardened mass is called "hydration," a reaction between the cement and water that forms strong chemical bonds. It must retain the moisture to allow the cement to chemically hydrate; usually for about 1 month. The best concrete stays continuously moist at a temperature of about 40 to 70 degrees Fahrenheit, such as the center of a mass concrete dam. The strongest concretes contain just sufficient water to chemically react with the available cement, which is about 25 to 40 percent water to cement, by weight. The weakest concretes contain excess water or prematurely dry out, which stops the hydration reaction prematurely. Most pozzolanic materials do not naturally harden through hydration with water; however, in the presence of either calcium hydroxide or lime, combined with water, a hydration reaction occurs. Fortunately, one of the chemical byproducts of cement hydration is calcium hydroxide (lime). Thus, added pozzolans, when combined with cement and water, make concrete even stronger and often more durable. Cement hydration also generates heat and can lead to temperature cracking when the interior mass is hot, and the exterior contracts as it cools. Thus, any means of reducing the cement content or adjusting cement chemistry or cement particle size to reduce heat generation lowers the potential for thermal cracking.

The durability of concrete depends on the durability of its constituents: cement paste and aggregates. A concrete with strong paste may not be durable if it is combined with poor aggregate, and vice versa. One of the most important parameters is the "porosity" of the paste, which is a function of the amount of water relative to the cementitious materials. Excess water can dilute the cement paste, leaving a more porous medium. This can be attacked more easily by deleterious substances and physical processes. The climate is a significant factor that influences the long-term durability of concrete structures. One of the reasons the ancient structures have survived is because they were constructed in relatively dry, temperate climates.

Early Obstacles to Durable Concrete

Historically, the quality of concrete was impaired by a lack of knowledge about the quality of materials and the methods of construction. In some instances, a lack of understanding about the quality of basic concrete materials (cement, sand, and gravel), as well as the proportioning of ingredients, impaired quality concrete construction under the severe exposures and harsh climates of the West. In other instances, the methods of batching, mixing, placing, and protecting the concrete limited the rate of construction and the overall quality of the structures. In addition, the methodology behind concrete design and construction was just developing and was not well documented or understood. Over time, however, a number of significant events and innovations during the 20th century contributed to the development of concrete as a durable engineering material, resulting in what is now considered "modern concrete."

Mechanisms of Deterioration in the Western United States

The three most critical natural deterioration mechanisms that widely affect Reclamation structures, primarily because of their age, are sulfate attack, alkali-silica reaction (ASR), and freeze-thaw (FT) attack. These three mechanisms are described in the paragraphs below. In many cases, concrete deterioration is caused by a combination of aggressive environments, such as wetting and drying in concert with sulfate attack in some California desert climates, or FT attack and ASR in the Northwest. Here, microfractures caused by one destructive element allow moisture to more easily penetrate the paste and contribute to a secondary reaction. One exposure condition that is common to United States highways and bridges is chloride/corrosion of reinforcing steel and the resulting deterioration. There are, of course, many other factors that can damage concrete, and those factors that are most relevant to Reclamation concrete are described in the *Guide to Concrete Repair*.

Concretes that remain durable under these conditions were proportioned in some way to withstand the elements, either accidentally or purposely. Some advances in the development of durable concrete resulted from observing concretes that essentially used chemically resistant cements or "accidentally" introduced beneficial admixtures, and then comparing them with those that rapidly fell to pieces.

Sulfate Attack

Sulfate attack is a chemical degradation of cement paste that is caused by high concentrations of sulfates in soils and ground water. Sulfate attack is caused by

chemical interactions between sulfate ions and constituents of the cement paste. The disintegration appears to be caused by chemical reactions with cement hydration products and the formation of a secondary compound, ettringite, accompanied by a large volumetric expansion and cracking of the concrete. Sulfate attack was also known as "cement corrosion" in the early 1900s and is very common in the white "alkali flats" of the arid Western States and in seawater, particularly tidal zones. Sulfate attack was noted in Reclamation structures on the Sun River Project in Montana in 1908, shortly after the formation of the U.S. Reclamation Service.[2]

Figure 1 shows the disintegration of a concrete canal lining in the Central Valley Project only 5 years after construction.[3] Early observations of such failures identified certain cement brands as more resistant to deterioration than others in these exposure conditions. "Bad" cements were less resistant and avoided, if possible, in favor of more resistant "good" cements.

Figure 1. Sulfate attack on a 5-year-old concrete canal lining, Central Valley Project, California. The ground water sulfates infiltrate the concrete and chemically react with certain cement hydration products. The expansive reaction causes cracking.

Alkali-Aggregate Reactions

Alkali aggregate reactions (AAR) are the chemical reactions between certain specific mineralogical types of aggregates (either sand or gravel) and the alkali compounds (generally less than 2 percent of the cement composition) of cement

[2] Jewett, J.Y., "Cement and Concrete Work of the United States Reclamation Service with Notes on Disintegration of Concrete by Action of Alkali Waters," *Proceedings of ASTM*, Vol. 8, p. 480-493, Philadelphia, Pennsylvania, 1908.

[3] Harboe, E.M., *Longtime Studies and Field Experiences with Sulfate Attack*, American Concrete Institute Special Publication No. 77-1, Detroit, Michigan, 1977.

in the presence of moisture. "Typical manifestations of concrete deterioration through ASR are expansion; cracking, which frequently is of such nature that it is designated as "pattern" or "map" cracking; exudations of jelly-like or hard beads on surfaces; reaction rims on affected aggregate particles within the concrete; and sometimes popouts."[4] The reaction products have a swelling nature, which leads to tensile stresses that cause cracking within the concrete. The cracking may allow moisture to more readily be absorbed by the silica gel or accelerate freeze-thaw damage.

Alkalies in cement can react with certain "glassy," siliceous aggregates such as opals, chalcedony, cherts, andesites, basalts, and some quartz (termed ASR), and certain specific carbonate aggregates (called alkali-carbonate reaction [ACR]).[5] ACR is rare in the Western U.S. ASR, shown in figure 2, was probably first experienced by Reclamation at American Falls Dam in Idaho, which was completed in 1927. However, extensive freeze-thaw deterioration and poor quality construction practices masked ASR as a primary cause of deterioration at American Falls Dam. Some structures, such as Parker Dam and Stewart Mountain Dam, suffered early rapid expansion and distress and then became relatively stable after a few years as the available alkalis and reactive aggregates were consumed early in the process. Other structures, such as Seminoe Dam, are showing continued expansion and resulting distress even 50 years after construction.[6]

Figure 2. One of the earliest photos of alkali-silica "gel" common to expansive AAR. These gels swell in the confined concrete matrix, causing expansion and cracking in the aggregates and concrete. Bureau of Reclamation Concrete Laboratory file photo (about 1940).

[4] American Concrete Institute, "Durability of Concrete Construction," ACI Monograph No. 4, Detroit, Michigan, Iowa State University Press, Ames, Iowa, p. 59-60, 1968.

[5] Meilenz, R.C., *Petrographic Examination of Concrete Aggregate to Determine Potential Alkali Reactivity*, Highway Research Report No. 18-C, p. 29-35, 1958.

[6] Mohorovic, C.E., and T.P. Dolen, *1998-99 Concrete Coring-Laboratory Testing Program, Seminoe Dam, Kendrick Project, Wyoming*, Bureau of Reclamation Technical Service Center, Denver, Colorado, August, 1999.

Freezing and Thawing Deterioration

Freezing and thawing (FT) deterioration is the deleterious expansion of water within the cement paste, which results in destruction of the concrete. Water present in the cement paste expands about 9 percent upon freezing. When confined within a rigid, crystalline microstructure, the expanding ice crystals can exert pressures far exceeding the tensile capacity of the paste, causing cracking and, ultimately, failure of the concrete.

Figure 3. FT deterioration of a spillway training wall at Lahontan Dam in California. The "sand cement" concrete, placed in 1915, was severely damaged by FT in the colder and mountainous regions of the West. Notice that the shady area is less damaged than the section exposed repeatedly to cold temperatures at night and sunlight during the day.

The concrete must be saturated, or nearly saturated, when it undergoes freezing in order for this form of deterioration to take place. Repeated cycles of FT are common in Reclamation water conveyance structures. Areas subject to cyclic freezing, such as the spillway shown in figure 3, and particularly those in fluctuating water surface levels or in splash or spray zones, are the most susceptible to deterioration.[7] Freeze-thaw deterioration is most pronounced in more porous concrete that has a high water-to-cement ratio and concretes without purposely entrained air bubbles; the very same concretes commonly used in early 20th century construction.

Freeze-thaw deterioration was first identified early in Reclamation history under the general term, "durability of concrete without specific causes or solutions." This form of damage is present in the colder and mountainous regions and

[7] Von Fay, Kurt, *Guide to Concrete Repair*, Bureau of Reclamation Technical Service Center, Denver, Colorado, August 2015 (original edition: Smoak, W. Glenn, April, 1997).

nonexistent in the desert Southwest. A mixture placed on the All-American Canal would have no problems, but the very same concrete placed on the Yakima Project would be severely affected.

Developing the State-of-the-Art of Concrete Technology

Even with quality materials, durable concrete could not effectively be mixed and placed in the larger Reclamation structures without improved construction practices and equipment. The historical development of durable Reclamation concrete can roughly be divided into four generations with regard to both materials and methods of construction. Each generation contributed to the knowledge base of the developing state-of-the-art. The first generation of Reclamation concrete technology covers the period from its inception in 1902 until about World War I. These practitioners were the first "pioneers" of Reclamation concrete construction. The next generation, from 1918 until the late 1920s, began developing concrete as an engineering material. The Boulder/Hoover Dam generation began in the late 1920s and continued up to World War II. This generation solved many of the fundamental problems encountered in massive concrete construction and many of the standardized quality concrete construction practices. They uncovered the mysteries of sulfate attack, AAR, and FT durability, leading to the first truly engineered, modern, durable concretes. The post-war generation (late 1940s to present) incorporated the basic concepts of modern concrete into a multitude of applications for dams, pumping and power plants, canals, and tunnels under a variety of differing site conditions.

The Early Years - The Concrete Pioneers

The first generation of concrete practitioners developed the technology largely through trial and error and continued observation. The earliest concrete was composed of poorly manufactured cements and/or unprocessed aggregates, and it was mixed by hand or with small mixers. The materials themselves (cement, sand, and gravel) were subject to great variability. The concrete mixture was proportioned by "recipe," based on previous experience, not necessarily on physical properties of the material. Many early Reclamation projects were somewhat isolated geographically, and there was less communication beyond regional boundaries. A change in location or structural design was not necessarily followed by an appropriate change in concrete mixture design, which resulted in spotty performance. Labor was cheap, but equipment and cement were expensive. The resulting mixtures contained the least amount of cement necessary to meet low strength requirements, at least by today's standards.

Concrete was largely transported by wheelbarrows and compacted in place by manual tamping, spading, and rodding. The production rates were very slow, resulting in frequent "cold joints" or unplanned flaws that allowed seepage and subsequent deterioration.

A major change in building technology, the introduction of steel-reinforced, concrete structures, at first did not improve concrete quality. Pre-1900 structures were more massive and used a stiffer concrete that was tamped into place. The resulting concrete was less permeable and somewhat more resistant to the elements due to its low porosity; water simply had difficulty entering the matrix to cause damage. Reinforced concrete structures took advantage of the tensile strength capacity of the steel, and the size of structural members was reduced. In addition to thinner structures, the reinforcing steel interfered with the placing and tamping practices. As a result, water was added to the concrete mixture to make it more fluid and, thus, easier to place. However, more cement was not necessarily added, and the weaker, more porous concretes started falling apart in the field in only a few years.[8]

The earliest Reclamation construction projects did not have the benefit of specific practices and equipment for concrete construction. Construction practices gradually improved during the first Reclamation construction era. Many structures fortunately used techniques that helped them resist degradation. Theodore Roosevelt Dam in Arizona used masonry facing and cyclopean concrete methods: large "plum stones" were placed followed by smaller cobbles and boulders, and then the concrete was added to fill the remaining voids. This construction technique left large stones across the construction joint surface that reduced shear planes. The mixtures had a low cement content on a per-cubic-yard basis that reduced thermal cracking and concrete cost.[9]

One construction advance, called "chuting" (shown in figure 4), could result in poor quality concrete. Considered an "improvement" over the back-breaking manual hauling by buckets, long chutes were used to transport concrete to the forms. This permitted a centralized concrete batching and mixing location, and larger batches could be fed to sometimes intricate, gravity-fed chute systems. Water was added to make the concrete flow down relatively flat, sloping chutes. The extra water diluted the cement paste in the concrete. These mixes were much weaker and had poor durability. The quality of the concrete could vary throughout the structure as the chute slope decreased and the distance from the mixing location increased. To discourage this practice, engineers finally specified that the slope of the chutes could not be flatter than about 35 degrees from horizontal.[10]

---

[8] Engineering News Record Editorial, *Some Doubts About Concrete*, Vol. 90, February 1923.

[9] Department of the Interior, Bureau of Reclamation, *Dams and Control Works*, Third Edition, Washington, DC, p. 57-60, 1954.

[10] Walter, L.W., "Thirty Years' Experience with Concrete," *Proceedings of the American Concrete Institute*, Vol. 25, Detroit, Michigan, p. 54, 1929.

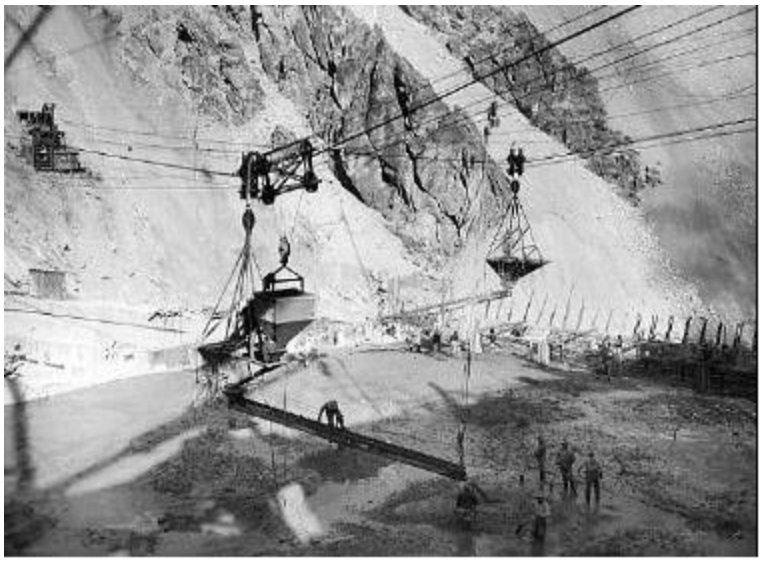

Figure 4. Chuting wet concrete into place at Arrowrock Dam (about 1912). Elaborate chute systems required a very fluid concrete mixture to be placed and spread in the forms. Water was the "admixture" of choice to improve the fluidity! (Bureau of Reclamation historical photographs)

The developing state-of-the-art had a few "hiccups" along the way. "Sand-cement" was introduced to reduce the cost of cement by intergrinding crushed rock flour during the manufacturing process.[11] The finely ground rock flour was introduced as a "pozzolan" to react with the cement for increased strength, and, indeed, the sand-cement mixtures had higher 7- and 28- day compressive strengths compared to the control mixtures. However, the compressive strength development did not continue much after 28 days, as is the case with Portland cement plus real pozzolans. Thus, the sand-cement reacted faster, but it did not act as a pozzolan because the rock flour was not calcined. Arrowrock Dam, in Idaho, constructed using sand-cement in 1915, was rehabilitated with a higher strength concrete facing in the mid-1930s to stop continued FT damage.[12]

First generation Reclamation concretes were vulnerable to sulfate attack, ASR, and FT deterioration. In spite of these problems, some concretes seemed remarkably durable. Engineers and scientists began examining concrete materials to try to improve the quality. Beginning in 1914, studies were conducted at the Lewis Institute in Chicago to shed new light on the engineering properties of concrete.

[11] Savage, J.L., "Special Cements for Mass Concrete," Second Congress of the International Commission on Large Dams, World Power Conference, Washington, DC, Bureau of Reclamation, Denver, Colorado, 1936.

[12] Studebaker, C.A., *Tentative Report on Gunite at Arrowrock Dam,* U.S. Department of the Interior, Bureau of Reclamation, Boise Project, Boise, Idaho, January 22, 1937.

The Abrams Generation

The first major advance in concrete technology during the 20th century occurred about 1918 with the publication of Duff Abrams' *Design of Concrete Mixtures*.[13] Abrams improved on the recipe proportioning methods through deliberate design practices with proportioning methods and mix design tables. Abrams classic research and his "water to cement ratio law" provided the foundation of concrete mix design still followed today. He found concrete strength and, thus, quality could be controlled by the relative proportions of water and cement. He also found it was possible to design mixes for the same strength using different materials. Concrete mixes could be designed and proportioned to meet a variety of conditions and structural requirements. Stronger concretes were developed to resist deterioration by the environment. Researchers began investigating the fundamental physical-chemical reactions that were needed to advance the state-of-the-art. One of the first inroads to developing durable concrete took place with the identification of the chemical reaction products of cement hydration, and a method to compute the relative proportions of each constituent in cement by Bogue in 1927.[14] This important step was necessary to formulate different compositions of cement. Without the knowledge of its composition, it was not possible to purposely change materials and manufacturing processes to enhance the performance of Portland cement.

Concrete manufacturing methods also improved during the 1920s, including centrally batched and mixed concrete plants and systems to haul and transport concrete to the site, as shown in figure 5. The daily output of concrete plants increased, resulting in fewer cold joints. The horse and wagon was being replaced by the locomotive and trucks. Larger projects were constructed, and more mechanized processes were developed. Still, the process of consolidating concrete was left to the common laborer through rodding and spading. The first methods to consolidate concrete with mechanical equipment were just being developed. Better treatment of cold joints was developed during this time, improving the continuity between adjacent placements. For the first time, control tests were used to design and monitor concrete mixtures within specific parameters. Abrams' generation of concrete technologists provided the foundation of knowledge for the next generation, beginning with the decision to construct Boulder (Hoover Dam) on the Colorado River in December 1928.

---

[13] Abrams, D.A., *Design of Concrete Mixtures*, Structural Materials Research Laboratory, Lewis Institute, Chicago, Illinois, 1918.

[14] Bogue, R.H., "Calculation of the Compounds in Portland Cement," *Industrial and Engineering Chemical Analysis,* Vol. 1, No. 4, October 1929

Figure 5. Early concrete canal lining. Horse and buggy transporting gave way to central batch plants and the first motorized transporting buggies. Still, the concrete placing and compacting processes were performed by laborers with shovels (Bureau of Reclamation historical photographs).

Boulder Dam/The "Hoover Generation"

In 1928, the Boulder Canyon Act ratified the Colorado River Compact and authorized construction of Hoover Dam.[15] The size of Hoover Dam required a completely new technology for large-scale concrete design and construction.

The Hoover generation raised concrete materials technology, design methods, and concrete construction technology to unprecedented heights. This generation of concrete technologists formulated large-scale research and development programs using special cements to meet the specific engineering properties for massive concrete structures. They answered some fundamental questions about cement chemistry and its effects on mass concrete. Solving these questions required close cooperation and communication between government agencies, manufacturers, contractors, and private and academic research institutions. The application of scientific methods to solve complex durability problems led to what we now know as "modern concrete."

One of the first steps required for concrete for Hoover Dam was to investigate the composition of cement to reduce the amount of heat generated as it hydrated. Extensive research on cement composition resulted in developing a low-heat cement for mass concrete, now known by the American Society of Testing and Materials (ASTM) as Type IV cement. The hydration product "tri-calcium

[15] Bureau of Reclamation, *Brief History of the Bureau of Reclamation*, Bureau of Reclamation History Program, Denver, Colorado, p. 4, July 2000.

aluminate," abbreviated in a simplified form as "C_3A," was found to be one of the principal compounds that generates heat during the hydration process. Reclamation specified the chemical composition of cement supplied to Hoover Dam in 1933 to ensure a low heat of hydration. The low-heat cement also had improved durability because the low C_3A cements had better resistance to sulfate attack. This improved resistance to sulfate attack was the basis for specifying less than 5 percent C_3A for cement used on the Kendrick Project in 1938, another forerunner of the ASTM Type V (sulfate-resisting) cement.[16]

Construction of such large projects as Hoover and Grand Coulee Dams could not have been accomplished without advances in concrete aggregate processing, concrete manufacturing, transporting, and placing. The use of block construction techniques (shown in figure 6) and artificial post-cooling reduced the potential for thermal cracking. Specialized concrete batch plants with rail transporting and "high-lines" or cable ways were used to transport and place large quantities in round-the-clock operations. One of the underappreciated advances in concrete quality developed by eliminating the back-breaking "tamping" techniques of consolidation with the high-frequency, mechanical concrete vibrator (shown in figure 7).[17] Vibrators allowed a lower unit water content of the mixture, thus lowering the cement content. The concrete generated less heat, became less porous, and it was less costly.

Figure 6. Mass concrete block construction at Hoover Dam (1930s). The size and scope of this project led to many innovations ranging from advances in cement chemistry to new methods of batching, mixing, transporting, placing, cooling mass concrete (Bureau of Reclamation historical photographs).

[16] Moran, W.T., *Bureau of Reclamation Viewpoint on Portland Cement Specifications*, 1952.

[17] McCarty, M.I., "High Frequency Vibratory Machines for Concrete Placement," *Proceedings of the American Concrete Institute*, Vol. 30, ACI, Detroit, Michigan, September 1933.

Figure 7. The mechanical concrete vibrator was first introduced to Reclamation during construction of Hoover Dam. The laborer's job of hand tamping and spading was replaced with mechanical equipment. However, even though the consolidation process was accomplished by machine, it took a strong person to manipulate these vibrators! (Bureau of Reclamation historical photographs)

The size of Hoover Dam required not only significant advances in construction equipment and materials processing, but also in construction project management and process quality control techniques. The designers and constructors of Hoover and Grand Coulee Dams were diligent, meticulous, and, to some degree, lucky. Fortunately, one of the chemical processes that could cause expansion, cracking, and deterioration of concrete (AAR) was avoided at Hoover Dam. The cements furnished to the dam had a high alkali content, and fortunately, the concrete was mostly free from potentially reactive aggregates (although not by design because the alkali-aggregate phenomena had not yet been identified and studied).[18]

Two of the indirect products of the Hoover generation were the founding of the Concrete Laboratory in Denver, Colorado, in 1931, and the first printing of the *Concrete Manual* in 1936. The Concrete Laboratory and *Concrete Manual* grew out of the need for a better understanding of the behavior of concrete and the

[18] DePuy, William, personal communication, Concrete and Structural Branch, Bureau of Reclamation, Denver, Colorado.

control of concrete construction. Over 100,000 copies of the *Concrete Manual* have been printed in nine editions and at least four languages. "Concrete schools" were developed for training engineering and field personnel, and they have continued to this day. The Reclamation concrete technologists were active participants in ASTM and ACI, serving as both committee chairmen and as president. This commitment to voluntary standards organizations continues today.

As the U.S. entered World War II, the last two pieces of the durability puzzle were identified and largely corrected. AAR was encountered by Reclamation at American Falls Dam, and about 150 miles downstream of Hoover Dam at Parker Dam. While American Falls Dam was undergoing rehabilitation from a variety of causes, Parker Dam was just being completed in 1937. Within 2 years, cracks appeared in the dam.[19] The cracking at Parker Dam was severe enough to warrant a large-scale research investigation and a blue ribbon panel of consultants. In the end, the chemical reactions between certain altered andesites and rhyolites in less than 2 percent of the aggregates and the alkalies in the cement fostered a deleterious, expansive reaction (ASR).[20] First observed in Pennsylvania in the early 1920s at the Buck Hydroelectric Plant, ASR became a noticeable problem throughout the country in the 1930s and early 1940s.[21] The first solution to ASR was to use petrographic techniques to identify those aggregates with the potential for expansion and to specify a 0.6-percent limit of alkalies in the cement[19] Reclamation quickly instituted the low-alkali limit for concrete with potentially reactive aggregates by April 1941.[22]

In 1938, the last major advance in developing durable concrete was the result of both accident and observation. In New York State, certain highway pavements were observed to have superior performance when a particular brand of cement was used in the concrete. The highway departments began specifying this particular brand of cement for all their highway construction without fully understanding the reason for superior performance. Microscopic examination of the concrete revealed a paste structure containing tiny, entrained air bubbles brought about by using beef tallow in the cement kilns during manufacturing.[23]

---

[19] DePuy, G.W., "Petrographic Investigations of Concrete and Concrete Aggregates at the Bureau of Reclamation," ASTM STP-1061, *Petrography Applied to Concrete and Concrete Aggregates*, ASTM, Philadelphia, Pennsylvania, p. 33-46, 1990.

[20] Stanton, T.E., "Expansion of Concrete Through Reaction Between Cement and Aggregates," *Transactions of ASCE*, Vol. 66, p. 1781-1811, December 1940.

[21] Kammer, H.A., and R.W. Carlson, "Investigation of Causes of Delayed Expansion of Concrete in Buck Hydroelectric Plant," *Proceedings of ACI*, Vol. 37, p. 665, June 1941.

[22] Dolen, T.P., "Cement History Database," Bureau of Reclamation, Science and Technology Program, Research Project FI908, *Decision Support System for Aging Concrete*, 2000.

[23] Lawton, E.C., "Durability of Concrete Pavement - Experiences in New York State," Proceedings of ACI, Detroit, Michigan, Vol. 35, p. 561, June 1939.

This produced the first "air- entrained" cement, accompanied by significantly improved FT resistance compared to other cements. The microscopic air bubbles absorbed the expansive forces of freezing ice crystals within the paste, preventing microcracking. Though not a direct player in the initial identification of entrained air, Reclamation began testing concrete for FT durability in the mid-1930s as a means of evaluating concrete, aggregate quality, and other additives, some of which may have accidentally entrained air. The perceived superior durability of Grand Coulee Dam concrete in the 1930s may have resulted from specifications allowing grinding aids during cement manufacturing that may have entrained some air.[24] Anecdotal evidence points to other accidental introductions of air in concrete in the U.S. as early as the 1920s. These concretes were quickly rejected due to lower density and compressive strength! Higginson even refers to the possibility of forms of entrained air in stucco specified by Marcus Vitrivius Pollio in the first century A.D.[25] Reclamation quickly changed its specifications and switched to air-entrained concrete by 1942.[26] By the end of World War II, Reclamation had largely overcome the three primary causes of concrete durability problems in the West, resulting in what is considered "modern concrete," an engineered concrete capable of resisting the physical and chemical forces of nature.

The Post-War Generation: "The Constructors"

The post-war generation of concrete technologists applied the fundamentals of modern concrete to "customize" it for a variety of new applications and over a wide range of different environments. This generation began as post-war citizen soldiers returned to the U.S. and continued through the Cold War. These people were the constructors. During the 1950s and 1960s, Reclamation was completing "a dam a year." Large, thick arch dams became high-strength, double curvature, thin arch dams. Projects were constructed across the desert and through 14,000-foot-high mountain ranges. Some of the largest water development and distribution systems were completed during this era: the Central Arizona and Central Utah Projects. The concretes used new additives to achieve greater durability, economy, and performance. These concretes should remain durable through the next century.

One of the most significant contributions of this generation improved durability and also made concrete less expensive. The purposeful addition of natural

[24] Bureau of Reclamation, *Effect of the Admixture, T.D.A., on the Durability of Concrete*, Cement Laboratory Report No. Ce-33, Denver, Colorado, June 30, 1942.

[25] Higginson, E.C., "Air-Entrained Concrete in Modern Construction," presented before the Engineering Section of the Colorado-Wyoming Academy of Science, Boulder, Colorado, May 2, 1952 .

[26] Price, W.H., "In the Beginning," Bureau of Reclamation, Concrete Laboratory Technical Conference, December 1981.

pozzolans in the early 20th century was made, in part, as a cost-saving measure, and then later to reduce the temperature rise of mass concrete. Reclamation began investigating a power plant byproduct, fly ash, in the 1930s and 1940s, as a substitute for natural pozzolans in mass concrete. The first large-scale specified use of fly ash was at Hungry Horse Dam in 1950.[27] Reclamation continued research on fly ash, yielding other benefits such as improving the sulfate resistance of concrete. In the 1970s, cement shortages prompted Reclamation to begin using fly ash in normal structural concrete and canal linings to save cement. The U.S. Environmental Protection Agency's implementation of the Resource Conservation Recovery Act, beginning in 1980, strongly encouraged the reuse of recycled materials, including fly ash, in concrete.[28] The long-term benefits of using fly ash will continue for generations, as these concretes are less porous and more resistant to sulfate attack and ASR, even more so than sulfate-resisting, low-alkali cements.[29]

The advances in construction equipment design dramatically increased concrete production during this time. Large-size canal linings are now placed at 10 times the rate as in the early days. Instead of adding water to increase fluidity, superplasticizers are now added to make concrete flow like water, yet be twice the strength of its predecessors. Concrete linings were even placed underwater to reduce leakage in unlined canals.[30] Concrete vibrators capable of consolidating 25 to 50 cubic yards of concrete per hour were replaced by 10-ton, vibratory rollers capable of placing 500 cubic yards per hour in roller-compacted concrete (RCC) dams.[31] It is interesting to note that the earliest Reclamation concretes were of such a consistency that they had to be manually "rammed" into place. The era of Reclamation concrete dam construction concluded at Upper Stillwater Dam using RCC of such consistency that it was mechanically "rammed" into place!

The Present Generation and Beyond

By about 1990, the last large dams were being completed, and a new era was underway. Most of Reclamation's construction program is now devoted to rehabilitation of the existing structures. The Reclamation Safety of Dams Act of

---

[27] Bureau of Reclamation, *Laboratory and Field Investigations of Concrete, Hungry Horse Dam, Hungry Horse Project,* Concrete Laboratory Report No. C-699, Denver, Colorado, December 4, 1953.

[28] Harboe, E.M., "Fly Ash and the EPA Guidelines," presentation to the Division of Design, February 1984.

[29] Kalousek, G.L., L.C. Porter, and E.J. Benton, "Concrete for Long-time Service in Sulfate Environment," *Cement and Concrete Research*, Vol. 2, Pergamon Press, New York, p. 79-89, 1972.

[30] Kepler, W.F., "Underwater Placement of a Concrete Canal Lining," *ACI Concrete International: Design and Construction*, Detroit, Michigan, p. 54-59, June 1990.

[31] American Concrete Institute, *Guide for Consolidation of Concrete*, Committee 309, Detroit, Michigan, 1999.

1978 provided the Secretary of the Interior with the authority to construct, restore, operate, and maintain new or modified features at existing Federal Reclamation dams for safety of dams purposes.[32] As the inventory of dams was closely examined, it became apparent that many dams were in need of attention. The safety of dams program recognized that dams constructed prior to changes in the state-of-the-art in dam design and construction were candidates for funding under this act. In addition to dam safety needs, many aging Reclamation structures were in need of some type of repair due to the ravages of time. One example is Tieton Dam (figure 8), constructed in Washington in 1925. The concrete-lined spillway suffered from serious FT deterioration. It was first rehabilitated in the 1970s, and again in 1999, with operations and maintenance funding. Concrete canals, power and pumping plants, and appurtenant structures are also being rehabilitated throughout the West. The present generation of concrete technologists benefitted from four generations of research and development. They must continue to apply the hard won practical knowledge of their predecessors to maintain the existing infrastructure well into the 21st century.

Figure 8. Tieton Dam spillway reconstruction in 1999, Yakima Project, Washington. The challenge for the 21st century: identify, protect, and preserve. The spillway was completed in 1925 and suffered from severe FT deterioration. It was extensively repaired after about 40 years and reconstructed in 1999. These types of rehabilitation efforts will take center stage in 21st-century Reclamation construction. (Construction records, Yakima Construction Office, Washington)

[32] U.S. Government, Public Law 95-578, November 2, 1978.

Conclusions

This paper reviewed the most significant causes of concrete deterioration and Reclamation's role in improving the technology to the current state-of-the-art. Without durable concretes, Reclamation could not have developed the western water resources infrastructure we enjoy today. The development and rapid implementation of these advances kept Reclamation at the forefront of the state-of-the-art through the 20th century. This has extended the long-term service life of its infrastructure well into the 21st century. Figure 9 summarizes many of the steps encountered in developing durable, modern concrete. Although the list of accomplishments is long, the author nominates the following as the "top five" contributions to durable concrete in the 20th century (in chronological order):

1. Abrams' design of concrete mixtures and "water-cement ratio law." Abrams applied engineering practices to concrete mixtures, and he was the first to institutionalize control of the water content to improve concrete quality.

2. Development of special cements to improve concrete quality, such as low-heat and sulfate resisting cements.

3. Development of the internal vibrator to consolidate concrete, which significantly reduced the water content of concrete, making it less permeable.

4. Determination of the causes of and solutions to AAR and FT attack, using scientific methods such as petrographic mineralogical examination and long-term testing, to identify the parameters which affected the durability of concrete under these conditions.

5. Incorporation of fly ash in Reclamation concrete construction, which improved concrete workability, decreased the porosity of the cement paste, and improved its resistance to sulfate attack and ASR.

Bureau of Reclamation Steps to developing durable concrete			
Poor Quality	Better Quality	Best Quality	"Modern Concrete"
"Pioneers" Hand mixing Low output (cold joints) Poor quality materials *Sulfate attack* *Alkali-aggregate reaction* *Freeze-thaw attack* Recipe mix design Reinforced concrete "Add more water!"	"Abrams" Water/cement ratio Quality materials Mix design Volumetric batching Sulfate attack Alkali-aggregate reaction Freeze-thaw attack "Chuting" "Add more water!"	"Hoover" Weigh batching Internal vibration (less water) Block construction Low-heat cement Use of pozzolans Type II, V cement Low-alkali cement Air-entrained concrete Process quality control Concrete Laboratory Concrete Manual "Add more water!"	"Post War" Pozzolans (fly ash) Automoted Construction (tunnels, canals) Admixtures Concrete repair Superplasticizers Silica fume Roller-compacted concrete~~CC~~
1902	1918	1928	1948 2002

Figure 9. Steps leading to the development of durable Reclamation concrete throughout the 20th century.

Guide to Concrete Repair

Part I: Appendix B

Petrographic Analysis for Concrete

Appendix B

Petrographic Analysis for Concrete

By Doug Hurcomb, Bureau of Reclamation

Introduction

Petrography is an observational science, performed by a person who is usually titled "the petrographer," which is used to study concrete quality and technology problems. The petrographer is usually asked to help answer questions about the quality of concrete and concrete aggregates, and to help determine cause and extent of damage to existing concrete.

One well-known petrographer described his role as the "eyes of the engineer, the chemist, and concrete technologist investigating the properties of concrete and the materials that go into making concrete" (DePuy, 1990). Usually, the petrographer evaluating concrete is a geologist with at least 5 years' experience in petrographic examination of concrete and concrete-making materials. The concrete petrographer should have knowledge to evaluate the effects of aggregates and supplementary cementing materials on the physical and chemical properties of hardened concrete, including concrete durability.

The Reclamation petrographer performs the analysis of hardened concrete in accordance with American Society for Testing and Materials Standard Guide C 856, *Standard Practice for Petrographic Examination of Hardened Concrete* (ASTM, 1999) and USBR 4856, *Petrographic Examination of Hardened Concrete* (Bureau of Reclamation, 1992).

Value of Petrographic Examination

Petrography is a way to diagnose concrete problems and to evaluate the performance of repairs. Unfortunately, there is no apparatus that allows rapid and thorough examination of concrete and provides complete analysis. Concrete petrography is the commonly accepted method of diagnosing the quality and condition of concrete and concrete-making materials.

The concrete petrographer assists the engineer who is contemplating a repair by providing an assessment of the concrete quality and composition. If the concrete

is damaged, the petrographer determines the cause and extent of concrete damage so that a proper repair can be designed and engineered.

The petrographic examination helps answer questions about what caused concrete failure and the extent of damage. Experience has shown that performing repairs without properly identifying the cause and extent of concrete damage usually leads to failed repairs.

Petrography can provide the information needed to help with repair decisions. The petrographer helps to formulate the sampling plan. Typically, samples (concrete cores) are selected from competent concrete and damaged concrete. If a concrete core sample is obtained through the damaged area to competent concrete, the petrographer can determine the quality of underlying concrete and the depth of deterioration. That information helps determine the depth of excavation needed for a good repair and assists in providing some diagnostic information about the damaged materials and the cause and extent of deterioration.

Information Provided by a Petrographic Examination

The Bureau of Reclamation's Petrographic Laboratory has experience investigating materials associated with the design and construction of Reclamation structures. The petrographer uses various techniques, instruments, and expertise based on training and experience.

Concrete petrography can provide:

- Detailed description of concrete or grout condition and composition.
- Quality evaluation of concrete and concrete aggregates.
- Air void system parameters including percent air content.
- Composition of segregated areas of grout and concrete.
- Quality of lift joint bond. Any materials affecting the contact between two concrete masses are easily observed and analyzed.
- Degree of cement hydration and estimates of water-cement ratio.
- Cause and extent of deterioration.
- Identification of physical quality problems including freezing and thawing damage.

- Identification of finishing and workmanship problems.
- Identification of deleterious materials such as alkali-silica gel or alkali-reactive glasses in aggregates.
- Identification of secondary reactions and products. Petrography can identify the crack filling or void filling material or the alteration of concrete, grout, or mortars due to exposure.
- Carbonation depth. Carbonation occurs when concrete is exposed to CO_2 in the air. Carbonation results in lower pH of the affected concrete and decreased porosity. The area around superficial cracks and surface exposures is typically carbonated, which is not a problem. Concrete is designed to be dense, and minor carbonation is not significant. However, carbonation can be a good indicator that the concrete has experienced other cracking due to ASR or freezing and thawing deterioration.
- Loss of mass due to acid attack. Flowing acidic waters can quickly attack concrete surfaces and cause significant deterioration.
- Diagnosis of concrete repair failures.

How Petrography is Used

The main power of petrography is information. Usually, the information is used by the person requesting the petrographic examination to solve a problem, identify materials or processes, or identify and document the condition of materials.

Hardened concrete, typically a concrete core, is submitted to the Petrographic Laboratory to evaluate condition or quality of the concrete, such as satisfactory, fair, or poor; to determine cause of inferior quality, distress, or deterioration; to evaluate specimens tested to failure; or to determine air void parameters.

The petrographic report details condition and workmanship; determines cause and extent of inferior quality, distress, and/or deterioration; describes aggregate rock types and physical and chemical quality, paste composition and condition, voids, secondary and hydration products, and fractures; and determines air void parameters including air content and size and distribution of air voids.

Uses of the Petrographic Report

The petrographic report documents the condition of the as-received samples, sample locations, background information such as who requested the petrographic examination, purpose of the petrographic examination, techniques used, and results.

The report typically contains an examination sheet, which provides detailed information on aggregates, paste, voids, secondary and hydration products, fractures, and other salient and notable features of the concrete. The information is evaluated, and conclusions address the concerns of the client and the general condition of the samples.

After completing the petrographic examination, results are interpreted and conclusions are made concerning the quality of the concrete based upon apparent durability and extent of damage.

- Satisfactory quality concrete generally exhibits only minimal damage that will not affect the durability or service life of the structure.
- Fair quality concrete exhibits minimal to moderate damage, and the durability and service life of the structure will not be seriously affected.
- Poor quality concrete exhibits extensive damage, and the durability and service life of the structure will be seriously impaired.

The report can be filed for future use, appended to an engineer's report, or stand alone as the primary report.

Tools of the Petrographer

Techniques and instruments include chemical analysis, X-ray diffraction analysis, X-ray fluorescence, petrographic and stereoscopic microscopy, scanning electron microscopy, energy dispersive X-ray microanalysis, and other miscellaneous techniques. The instruments are only as good as the skill and experience of the petrographer in obtaining and interpreting scientific evidence.

The stereoscopic, petrographic, and reflected light microscopes are the work horses of the petrographer. The stereoscopic microscope is simply a microscope equipped with a light source and zoom magnification. It is used for low magnification examinations of foundation rock, soil, concrete aggregate, riprap, concrete, and Portland cement grout, as well as for photomicrographs on the order of several millimeters in diameter.

The petrographic microscope is a microscope with a polarized light source used for higher magnification examinations. Polarized light analyzes properties of the material, and the information is used by the analyst to identify materials. It is used for low to higher magnification examination of thin sections and small particles of foundation rock, soil, concrete aggregate, riprap, concrete, and Portland cement grout, as well as for taking photomicrographs on the order of fractions of a millimeter.

The reflected light microscope is similar to the petrographic microscope and typically uses top-light illumination to examine polished specimens of concrete and Portland cement grout. The microscope may also be used to identify opaque minerals.

X-ray diffractometry (XRD), X-ray bombardment of a powder sample or a single crystal, provides identification of crystalline compounds (i.e., calcium carbonate). Typical samples are fine-grained rock, soil, concrete, and Portland cement grout, as well as precipitates, cement, pozzolan, stains, scales, coatings, paint pigments, sludge, filter residues, organics, corrosion products, and metals. XRD produces a "fingerprint" and is a fast, inexpensive way to analyze fine-grained materials.

Scanning electron microscopy (SEM), or electron bombardment of the sample, produces images with very high magnifications. The SEM and its accompanying energy dispersive spectrometer (EDS) can be used to analyze both crystalline and noncrystalline materials. The instruments can provide detailed images of very small particles on a submicron scale and provide their elemental compositions. The elemental data from EDS data, coupled with compound information from XRD, can potentially identify any compound previously identified using a database of X-ray diffraction data.

References

ASTM 1999. C856, "Standard Practice for Petrographic Examination of Hardened Concrete," *1999 Annual Book of Standards.* Section 4, Vol. 04.02, p. 413-427.

Bureau of Reclamation. 1992. USBR 4856, "Petrographic Examination of Hardened Concrete," *Concrete Manual*. Part 2, 9th edition, p. 597-615.

DePuy, G.W., 1990. ASTM STP 1061, *Petrographic Investigations of Concrete and Concrete Aggregates at the Bureau of Reclamation, Petrography Applied to Concrete and Concrete Aggregates.* B. Erlin and D. Stark (eds.), American Society for Testing and Materials, Philadelphia, Pennsylvania.

Sheldon, G.J. 1985. *Petrographic Laboratory Analytical Techniques and Capabilities Reference*, 28 pp.

Guide to Concrete Repair

Part II: Standard Specifications for Repair and Maintenance of Concrete, M-47

M0470000.715

Standard Specifications for Repair and Maintenance of Concrete, M-47

U.S. Department of the Interior
Bureau of Reclamation
Technical Service Center
Concrete, Geotechnical, and Structural Laboratory
Denver, Colorado

August 2015

Standard Specifications for Repair and Maintenance of Concrete

In order to achieve the best results in the repair and maintenance of concrete, follow the seven-step repair process described in detail in Part I of this *Guide to Concrete Repair* (Guide), as well as the information presented here in Part II.

Part II of the Guide begins with the assumption that steps 1 through 4 (as described in part I, chapter A) have been properly conducted and that repairs are planned and budgeted. After a repair material/technique has been properly selected, it becomes fairly straightforward to select which specification section to use. Thus, the next logical step is preparing repair specifications, either as a stand-alone project or as a part of a larger project. The best results will be obtained by using the information in Part I, chapter D, to help adjust the guide specification for an actual project. In addition, because it can be difficult to achieve long service life concrete repairs, and these documents do not cover all possible repair scenarios, personnel in the Concrete, Geotechnical, and Structural Laboratory (CGSL) are always available to provide expert advice and assistance.

Part II includes an appendix with the following separate specification sections:

- Concrete removal, including hydrodemolition
- Concrete repair, including small and large repairs
- Concrete surface repair using polymer concrete (including epoxy mortar)
- Crack repair using epoxy injection
- Chemical grout to seal leaks
- Concrete crack healer and penetrating sealer
- Coating concrete

Appendix IIA also includes the Bureau of Reclamation's (Reclamation) concrete and shotcrete guide specifications, which pertain to concrete that might be used for replacement concrete, shotcrete, silica fume concrete, or other forms of concrete used for repair (such as self-consolidating concrete).

While preplaced aggregate concrete is a very effective repair method, it has rarely been used by Reclamation, especially over the last 20 years; therefore, if a repair using preplaced aggregate concrete is under consideration, please contact staff at CGSL for assistance.

When developing concrete repair specifications that are appropriate for a specific job, users can select which specification section, or parts of a section, to use.

(Refer to guidance contained in Part I of the Guide.) It will also be helpful to consult with CGSL staff, as they continually update these guide sections. Finally, it should be recognized that no two repair projects are the same, so each project will require modification and changes to these specification sections.

The standard concrete repair and maintenance materials and techniques described in this Guide have been developed and evaluated by Reclamation over many years. In many cases, repair is synonymous with maintenance – the activities followed are similar, and the goal of extending the service life is the same. Sometimes, the distinction is only related to the scope or size of a project.

As mentioned above, the Guide now contains a section on coating concrete. If a decision is made to coat concrete for purposes of repair or maintenance, there must be specific reasons and objectives for the coating, and a logical process must be followed to ensure that the coating will last as long as possible.

These guide specifications will be updated periodically (more frequently than the entire Guide to Concrete Repair). For questions related to this Guide, any assistance with concrete repair and maintenance issues, or to obtain information about the latest concrete repair guide specifications, please contact:

Kurt von Fay, Westin Joy, Warren Starbuck, or Matthew Klein
Bureau of Reclamation
Technical Service Center
Concrete, Geotechnical, and Structural Laboratory
Attention: 86-68530
PO Box 25007
Denver Federal Center
Denver, CO 80225

The Seven Steps of Concrete Repair and Maintenance

Unfortunately, many repair failures have occurred on Reclamation concrete structures, even though very durable repair materials were specified and used. This has been a problem not only for Reclamation, but for the entire concrete repair industry. As a result, in the early 1970s, the industry started receiving more attention and resources to help improve the performance of concrete repairs.

In evaluating the causes of these failures, one lesson that was learned is that it is essential to consistently use a systematic approach to repairing concrete. Several agencies and authors have developed similar systems, and this Guide does not discuss or evaluate which of these systems is best for any set of field conditions. The purpose of this Guide is to present a concrete repair system Reclamation has

used over a long period of time, which has resulted in many successful concrete repairs. This system, known as "The Seven Steps of Concrete Repair and Maintenance," is suitable for both construction defects in new concrete and for old concrete that has been damaged by long exposure to field conditions. When using this approach, it is necessary to take the steps in the correct order. Many times, the first questions asked when damaged concrete is detected are: "What should be used to fix this?" and "How much will the repair cost?" These are good questions, but they are asked at the wrong time. With a systematic approach, these questions are asked after enough information is available to provide good answers.

The seven steps of concrete repair and maintenance are:

1. Determine the cause(s) of damage
2. Evaluate the extent of damage
3. Evaluate the need to repair
4. Select the repair method and material
5. Prepare the existing concrete for repair
6. Apply the repair method
7. Cure the repair properly

It is also important to view the information gathered as part of a system of the existing structure and the quality of the concrete, the deterioration or damage affecting the concrete, and its service environment for the repairs to be as durable and long lasting as possible. Always consider how these aspects will interact so that a repair plan is developed that will not worsen the damage or deterioration.

Step 1. Determine the Cause(s) of Damage

It is essential to determine the causes(s) of damage to the concrete in order to achieve long-lasting repairs. If the cause of damage is not discovered or an incorrect determination is made, the repair will most likely deteriorate for the same reason the original concrete became damaged. The repair will be short lived, and the new repair will likely be larger and more expensive.

Step 2. Evaluate the Extent of Damage

The objective of this step is to determine how much of the structure is damaged and to what extent it is damaged. This helps designers and planners to properly determine how much concrete, steel, etc., might require removal (in the case of repair) or how much of the surface should be sealed or coated (in the case of maintenance).

Step 3. Evaluate the Need to Repair

Not all damage to concrete needs repair. Repairs should be undertaken only if they will result in longer or more economical service life, a safer structure, or necessary cosmetic improvements in the structure. This step also includes determining when the structure can be taken out of service for repairs, estimating how long repairs will last, and deciding how the costs of the repairs will be budgeted.

Steps 1-3, as explained above, are the major components of a condition assessment or survey. Steps 4-7 of the concrete repair process should only be taken after steps 1-3 have been properly performed.

Step 4. Select the Repair Method and Material

After completing steps 1-3, and considering the existing condition and quality of the concrete and its service environment, an appropriate repair system can be selected that takes into consideration the many factors essential to a successful repair. In a majority of repair situations, the standard materials and methods in this specification will fully meet all repair or maintenance needs. However, certain service conditions or special repair situations will occur when these "standard methods and materials" will not meet the special requirements, and it will be necessary to resort to "nonstandard" repair materials or methods.

Nonstandard repair materials are continually being tested and evaluated by Reclamation laboratory and field offices. They include materials that may have performed well in laboratory tests but have not yet been applied in the field, materials that do not yet have long or sufficient field service to determine service life expectancy, or newly developed commercial materials that have not yet been tested or evaluated by Reclamation.

The only time it is appropriate to use nonstandard or unproven repair materials is when a determination is made that none of the standard repair methods and materials will work properly, and only when all involved parties fully understand and agree that the risks of using unproven materials are justified by the expected benefits of the repair.

Step 5. Prepare the Existing Concrete for Repair

The most common cause of repair failure is poor preparation of the existing concrete prior to application of the repair material. Even if every other step is done perfectly, if this step is done improperly, the repair will likely fail. Even the best repair materials will give poor service life if they are bonded to dirty, weakened, or deteriorated concrete. The specification sections that follow

provide only the minimum preparation requirements. Also, different repair materials may have special preparation requirements. For example, the preparation requirements for replacement concrete differ from those for polymer concrete. Therefore, to find the preparation requirements for a specific type of concrete repair, refer to the section of this Guide that pertains to the repair materials under consideration.

Step 6. Apply the Repair Method

Each standard and nonstandard repair material has application procedures specific for that material. As noted above, the procedures necessary for replacement concrete are vastly different from those necessary for polymer concrete. It is essential that proper application techniques for each material be followed exactly.

Step 7. Cure the Repair Properly

Another common cause of repair failures involves improper or inadequate curing. Each repair material has specific curing requirements. For example, replacement concrete benefits from long periods of water curing, while some packaged repair mortars require a few hours of water curing, followed by drying. Polymer concrete has essentially no curing requirements (protect until hard), while those of silica fume concrete are exceedingly exact. Failure to achieve proper cure for the proper duration will likely result in an inferior repair at the final step of the process.

Guide to Concrete Repair

Part II: Appendix A

Guide Specifications

SECTION 03 30 00
CAST-IN-PLACE CONCRETE

GUIDE SPECIFICATION
DEPARTMENT OF THE INTERIOR - BUREAU OF RECLAMATION

REVISIONS

Reference Standards Checked/Updated: 11/20/14

Content Revisions:

11/13/13	Significant changes throughout Section, too numerous to list.
4/6/09	Changed Section number
3/12/08	Added optional paragraphs for Contractor Quality Testing. Added requirement that curing compound in contraction joints prevents bond.
8/3/07	Revised cementitious materials payment footnote, added appendix A address for M-47 reference, revised repair submittal, added ICRI requirements for surface prep of construction joints and existing concrete, added mortar requirement to U2 finish when used for U3, added broom finish, and added finish slope requirements for unformed finishes.

Editorial/Format Revisions:

7/24/15	Changed template
4/6/09	Changed template
8/3/07	Changed template and added blank page code to end.

Template: CSI_15a.dotx

NOTES

(1) ASTM C94 has three options for concrete mixture: Option A - Manufacture required to assume full responsibility for selection of proportions of concrete mixture. Option B - Purchaser assumes full responsibility for proportioning of concrete mixture. Option C - Manufacturer required to assume full responsibility for selection of proportion of concrete mixture with minimum allowable cement content specified. This guide is written assuming Option A applies.

SECTION 03 30 00
CAST-IN-PLACE CONCRETE

GUIDE SPECIFICATION
DEPARTMENT OF THE INTERIOR - BUREAU OF RECLAMATION

(2) Recovered/Recycled materials:
Agencies that procure $10,000 or more worth of cement and concrete, including concrete products, in one fiscal year are required by 40 CFR 247 to specify that such items contain coal fly ash (Class C or F) or ground granulated blast furnace slag (GGBF). Exceptions are made only if fly ash is too costly, not readily available, or not suitable for performance requirements.
Solicitations mandating use of fly ash must contain FAR clauses 52.223-4 "Recovered Material Certification" and 52.223-8 "Estimate of percentage of Recovered Material Content for EPA-Designated Products – Alternate I". Coordinate with issuing office to ensure these clauses are included in the solicitation.

(3) TSC Concrete, Geotechnical, and Structural Laboratory (CGSL - 86-68530) may be contacted when assistance or specialized knowledge for concrete is required. (Contact phone number - 303-445-2373)

(4) Quality Testing: Historical practice for Reclamation was to have Government personnel perform extensive Quality Assurance testing for concrete. Due to various factors, Reclamation has at times needed to rely on testing agencies to perform testing for Quality Assurance purposes. See the footnote attached to Contractor Quality Testing Article (2.11) or discussion of testing procedures and appropriate specifications editing.

(5) When concrete structures are very simple and tolerances are not required, Very Short Form version of Cast-In-Place Concrete guide spec may be used. When concrete tolerances are required, this guide spec should be used.

Standard drawings:

40-D-6263 General Notes and Minimum Requirements for Detailing Reinforcement

40-D-7012 General Concrete Outline Notes

Please provide corrections or comments to address shown on home page of USBR Guide Specifications intranet site: intra.usbr.gov/guidespecs

SECTION 03 30 00
[1]CAST-IN-PLACE CONCRETE

PART 1 GENERAL

1.01 MEASUREMENT AND PAYMENT

A. [2][Concrete:

1. [3][Measurement: Volume of concrete measured to structure neatlines shown on drawings.]

   a. [4][Where concrete is placed on or against excavated surfaces, measurement will be made to lines for which payment for excavation is made.

   b. Measurement of other concrete will be made to structure neatlines shown on drawings.

   c. Volume of openings, recesses, embedded pipes, and metalwork larger than 100 square inches in cross section will be deducted.]

2. Payment: Cubic yard price offered in the Price Schedule. Includes cost of labor and materials for concrete [5][except as specified].

   a. [6][Includes cost of concrete reinforcement.]

B. [7][Cementitious Materials:

1. Measurement: Weight of cementitious materials used in concrete based on batch weights and batch counts at batch plant measured in most practical manner.

---

1 Delete "(Ready Mix Form)" from footer. (Match Section title)

2 When appropriate for the job, this Section may have multiple pay items for concrete with pay item titles describing the structures included in each pay item. In the rare situation that all concrete will be paid for in other item(s) of work, delete concrete pay items and include appropriate statements in Cost paragraph.

3 Revise as required. Delete measurement when concrete is paid by lump price (infrequently used).

4 Delete or revise as required

5 Include when cementitious materials is separate pay item. Delete when cementitious materials cost is included in price offered for concrete. See footnote for Cementitious Materials pay item.

6 Delete when solicitation includes separate pay item for Concrete Reinforcement. Include when cost of concrete reinforcement is included in price offered for Concrete.

7 Delete this pay item when the Contractor is responsible for mix design. Cost of cementitious materials should be included in payment for concrete when the Contractor is responsible for concrete mix design. This guide is written assuming Contractor is responsible for mix design (see Article 2.08).

Include payment for cementitious materials when Government will be responsible for concrete mix design (the Contractor does not have control over how much cementitious materials are used per cubic yard of concrete). Coordinate with Mix article (2.08) as required.

a. Includes portland cement, {blended hydraulic cement,} and supplementary cementitious materials (SCM).

b. One bag of cement will be measured as 0.047 ton.

c. Does not include weight of cementitious materials in concrete that is wasted.

2. Payment: Ton price offered in the Price Schedule.]

C. [8][Cost:

1. Include cost of concrete for chain link fence in price offered in the Price Schedule for Chain Link Fence.

2. Include cost of concrete for bridge deck in price offered in the Price Schedule for Pretensioned Concrete Bridge Beams.]

1.02 ACRONYMS

A. NRMCA: National Ready Mixed Concrete Association

1.03 DEFINITIONS

A. [9][Architectural Concrete: Concrete of special architectural importance placed as shown on the drawings.

1. Colored Concrete: Cast-in-place concrete using integral coloring additives added at batch plant and delivered in concrete mixture.

2. Stained Concrete: Cast-in-place concrete with penetrating stain applied after hardening.

3. Textured Surface Form Lined Concrete: Cast-in-place concrete that is placed against textured form.]

B. [10][Chemical and Drying Shrinkage-Reducing Additive Concrete (CDSRA Concrete): Concrete with use of Chemical and Drying Shrinkage-Reducing Additive (CDSRA) specified. Applicable concrete mix(es) in Table 03 30 00A - Concrete Mixes are identified as CDSRA Concrete in Notes column.]

---

[8] Include when contract includes items that require concrete and cost of concrete for those items is included in prices offered for those items. Some examples are provided. Edit cost items as appropriate for job.

[9] Delete when job does not include architectural concrete. Not frequently used. Edit list of architectural concrete types as appropriate for job.

[10] Delete when specifications do not include CDSRA Concrete. Specify CDSRA Concrete only for applications requiring special control of shrinkage. Not required for most applications. Use will be based on structure type.

C. [11][Shrinkage Reducing Admixture Concrete (SRA Concrete): Concrete with use of Shrinkage Reducing Admixture (SRA) to reduce material shrinkage due to drying. Applicable concrete mix(es) in Table 03 30 00A – Concrete Mixes are identified as SRA Concrete in the Notes column.]

D. [12][Reinforced Structural Mass Concrete (RSMC): Placement greater than {2.5-feet} in least direction {and designated as RSMC on drawings}. Specified requirements for RSMC lessen potentially detrimental thermal stresses from heat generated during curing.]

E. [13][Self-Consolidating Concrete (SCC): Highly flowable, non-segregating concrete that spreads into place, fills formwork, and encapsulates congested reinforcement, without mechanical vibration.]

F. Supplementary Cementitious Materials (SCM): Cementitious materials other than portland cement.

1.04 REFERENCE STANDARDS

A. American Concrete Institute (ACI)

---

[11] Delete when specifications do not include SRA Concrete. Specify SRA Concrete only for applications requiring control of shrinkage caused by drying. This is not an alternative for CDSRA Concrete. Use will be based on structure type.

[12] Delete when specifications do not include concrete placements that are relatively thick. Include when job contains thick concrete placements and a determination is made that special measures are required to deal with heat generated during curing. Revise dimension as appropriate for job.

The statement "and designated RSMC on the drawings" may be deleted when all placements exceeding specified minimum thickness shall be mixed and placed in accordance with RSMC requirements. Include statement when only some placements exceeding the specified minimum dimension need RSMC requirements. Designate those placements on the drawings.

Note to Designers: RSMC generally consists of concrete placements where the minimum section is greater than 2 to 3 feet. Consult with 86-68530 for dimension that is appropriate to use for specific jobs. Designate placements that are RSMC on drawings.

Without preventive measures, heat generated during curing may result in unacceptable stresses due to thermal gradients in mass concrete before adequate strength is developed. Preventive measures specified include: Increased content of pozzolan in cementitious material, lower concrete mix temperature at placement, insulating during initial curing (as needed), and internal cooling (as needed). Finite element analysis (can be performed by 86-68110), or ConcreteWorks software may be useful to determine limits, http://texasconcreteworks.com.

Even though minimum dimensions exceed the threshold, nonstructural (and possibly some structural) concrete placements where potential cracking due to thermal stresses is not critical do not need RSMC requirements specified.

Inclusion of RSMC in the specifications requires this Section to be edited to include various Articles and paragraphs in other locations of the Section.

[13] Delete when job does not include self consolidating concrete. Not frequently used. Use as needed based on concrete placing requirements. When included, edit Section 03 11 10 - Concrete Forming to require submittal of design calculations certified by a P.E. Calculations shall be based on full hydraulic head of a placement.

1.	[14][ACI 117 - 10	Tolerances for Concrete Construction and Materials
2.	ACI 201.2R – 08	Guide to Durable Concrete
3.	ACI 301-10	Structural Concrete
4.	[15] [ACI 303.1-97	Cast-In-Place Architectural Concrete]
5.	ACI 304R-00(2009)	Guide for Measuring, Mixing, Transporting, and Placing Concrete
6.	ACI 305.1-14	Hot Weather Concreting
7.	ACI 306.1-90(2002)	Cold Weather Concreting
8.	ACI 318-11	Building Code Requirements for Structural Concrete

B. ASTM International (ASTM)

1.	ASTM C31/C31M-12	Making and Curing Concrete Test Specimens in the Field
2.	ASTM C33/C33M-13	Concrete Aggregates
3.	ASTM C39/C39M-15a	Compressive Strength of Cylindrical Concrete Specimens
4.	ASTM C42/C42M-13	Obtaining and Testing Drilled Cores and Sawed Beams of Concrete
5.	ASTM C94/C94M-15	Ready-Mixed Concrete
6.	ASTM C114-17	Chemical Analysis of Hydraulic Cement
7.	ASTM C117-13	Materials Finer than 75-µm (No. 200) Sieve in Mineral Aggregates by Washing
8.	ASTM C136-14	Sieve Analysis of Fine and Coarse Aggregates
9.	ASTM C138/C138M-14	Density (Unit Weight), Yield, and Air Content (Gravimetric) of Concrete
10.	ASTM C143/C143M-12	Slump of Hydraulic-Cement Concrete
11.	ASTM C150/C150M-12	Portland Cement
12.	ASTM C157/C157M-08(2014)	Length Change of Hardened Hydraulic-Cement Mortar and Concrete
13.	ASTM C171-07	Sheet Materials for Curing Concrete

[14] Delete this reference for most jobs. This reference included only when Surfaces Tolerances Table (03 30 00D) is not included. Specs need to be revised to incorporate this reference.

[15] Delete this reference for most jobs. Include only if decorative or architectural concrete is specified.

14.	ASTM C231/C231M-14	Air Content of Freshly Mixed Concrete by the Pressure Method
15.	ASTM C260/C260M-10a	Air-Entraining Admixtures for Concrete
16.	ASTM C309-11	Liquid Membrane-Forming Compounds for Curing Concrete
17.	ASTM C494/C494M-13	Chemical Admixtures for Concrete
18.	ASTM C595/C595M-14	Blended Hydraulic Cements
19.	ASTM C618-12a	Coal Fly Ash and Raw or Calcined Natural Pozzolan for Use in Concrete
20.	[16][ASTM C979/C979M-10	Pigments for Integrally Colored Concrete]
21.	[17][ASTM C989/C989M-14	Slag Cement for Use in Concrete and Mortars]
22.	ASTM C1017/C1017M-13	Chemical Admixtures for Use in Producing Flowing Concrete
23.	ASTM C1064/C1064M-12	Temperature of Freshly Mixed Hydraulic-Cement Concrete
24.	[18][ASTM C1074-11	Estimating Concrete Strength by the Maturity Method]
25.	ASTM C1260-14	Potential Alkali Reactivity of Aggregates (Mortar-Bar Method)
26.	ASTM C1293-08b	Determination of Length of Change of Concrete Due to Alkali-Silica Reaction
27.	ASTM C1315-11	Liquid Membrane-Forming Compounds Having Special Properties for Curing and Sealing Concrete
28.	ASTM C1567-13	Determining the Potential Alkali-Silica Reactivity of Combination of Cementitious Materials and Aggregate (Accelerated Mortar-Bar Method)
29.	[19][ASTM C1581/C1581M-09a	Determining Age at Cracking and Induces Tensile Stress Characteristics of Mortar and Concrete under Restrained Shrinkage]

[16] Include only when colored concrete specified.

[17] Include only when slag cement is included as Supplementary Cementitious Material (SCM).

[18] Include only when estimating concrete strength by maturity method is specified.

[19] Include only when CDSRA is specified.

30.	ASTM C1602/C1602M-12	Mixing Water Used in the Production of Hydraulic Cement Concrete
31.	[20][ASTM D1751-04(2013)	Preformed Expansion Joint Filler for Concrete Paving and Structural Construction (Nonextruding and Resilient Bituminous Types)]
32.	[21][ASTM D1752-04a(2013)	Preformed Sponge Rubber Cork and Recycled PVC Expansion Joint Fillers for Concrete Paving and Structural Construction]

C. U.S. Army Corps of Engineers (COE)

1.	COE CRD-C 662-10	Determining the Potential Alkali-Silica Reactivity of Combinations of Cementitious Materials, Lithium Nitrate Admixture and Aggregate (Accelerated Mortar-Bar Method)

D. International Concrete Repair Institute (ICRI)

1.	ICRI 310.2-2013	Guide for Selecting and Specifying Concrete Surface Preparation for Sealers, Coatings, and Polymer Overlays (formerly No. 03732)

E. Bureau of Reclamation (USBR)

1.	USBR M-47	Standard Specifications for Repair of Concrete, August 2015 (Part 2, Appendix 1 of "Guide to Concrete Repair" available at http://www.usbr.gov/ (insert URL _____)
2.	USBR Concrete Manual	Concrete Manual, Eighth Edition, Revised Reprint, 1981

F. NSF International (NSF)

1.	NSF/ANSI 61-2013	Drinking Water System Components – Health Effects

[20] Include when bituminous joint filler specified. Delete when sponge rubber joint filler specified or there is no joint filler required (i.e. no expansion joints).

[21] Include when sponge rubber joint filler specified. Delete when bituminous joint filler specified or there is not joint filler required (i.e. no expansion joints).

1.05 SUBMITTALS

A. Submit the following in accordance with Section 01 33 00 - Submittals.

B. RSN 03 30 00-1, Approval Data:

1. Mix Design: For each concrete mix.
   a. Mixture proportions.
   b. Material sources.
      1) Name and manufacturer of each cementitious material.
      2) Name of aggregate source(s).
      3) Product name and manufacturer of admixtures to be used in mix. Certify that admixtures:
         a) Contain no purposefully added chlorides.
         b) Chloride ion limits in accordance with ACI 201.2R.
      4) Government reserves the right to require submission of samples of concrete materials for testing before or during use in concrete.
   c. Physical properties:
      1) Compressive strength:
         a) Test data: ACI 301, paragraph 4.2.3.4.
         b) Field test data: Performed within past 24 months.
         c) Trial mixtures:
            i. Incorporate admixtures that will be used in production mixes into trial mixes.
            ii. Results from trial batches made within past 6 months.
            iii. Trial mix test results, three six-inch diameter cylinders each at 7, and 28 [22][, and 56] days.
            iv. Average compressive strength of trial batch cylinders at specified design age.
      2) [23][Shrinkage test results for CDSRA Concrete mix.]
      3) [24][Shrinkage test results for SRA Concrete mix.]

---

22 Include when RSMC requirements included. Delete when RSMC not required. Design compressive strength of RSMC is specified at 56 days to control heat of hydration. Other design ages may be specified, but very infrequently used.

23 Delete unless CDSRA Concrete specified.

24 Delete unless SRA Concrete specified.

d. Resubmit mix design for change in material source or type.

2. Name and manufacturer of curing compounds, and joint filler.

a. Include application instructions for curing compound.

3. [25][Concrete coloring admixture:

a. Manufacturers brand names, instructions and recommended dosages, and standard color chart.]

4. Certifications and test reports:

a. Sealed by Professional Engineer.

b. Less than 12 months old.

c. Certifications and test reports:

1) Cementitious materials manufacturer.

2) Aggregate producer for:

a) ASTM C33 physical properties

b) ASR testing reports for each aggregate source.

3) Mixing water: ASTM C1602.

d. Submittal of certifications and test reports shall not relieve Contractor of responsibility for furnishing materials meeting specified requirements.

C. [26][RSN 03 30 00-2, Concrete Placement Drawings:

1. Drawings for individual concrete placements. More than one placement may be shown on a drawing.

a. An individual concrete placement is defined as a portion of concrete work placed in one continuous operation between specified lines or joints.

b. List contract drawing(s) from which details for placement were obtained.

c. Show locations, elevations, dimensions, blockouts, openings, recesses, waterstops, and finishes.

d. Show details of items embedded in or associated with placement except reinforcing steel.

e. Reference related reinforcement drawing(s) associated with placement.

[25] Delete unless colored concrete specified.

[26] Delete when concrete placement drawings not required. Coordinate requirement for placement drawings with designers.

2. Include separate drawing(s) showing placement sequence.]

3. Identify proposed changes to joint locations.

D. [27][RSN 03 30 00-3, Concrete Placement Schedule:

1. Complete, detailed concrete placement schedule showing Contractor's plan for individual placements including placement of reinforcement and embedded items.

2. Detail as necessary to show location, sequence, and date of concrete placements scheduled for each item of concrete work.

3. [28]{Show submittal schedule for placement and reinforcement drawings.}]

E. [29] [RSN 03 30 00-4, RSMC Temperature Control Plan:

1. Design temperature control plan using finite element type software capable of running thermal analysis to evaluate internal concrete temperature with ambient and construction influences.

2. Show location, sequence, and date of concrete placements scheduled for each RSMC designated structure.

   a. Anticipated maximum temperature of concrete in each placement and methods used to calculate maximum temperature.

   b. Methods used to control temperature.

   c. When internal cooling will be used, include detailed cooling plan with at least the following.

      1) Type, size, location, spacing, and diameter of cooling pipes; water cooling equipment; and flow.

   d. Identify how sequencing of adjacent RSMC placements will be determined.

3. Include name and manufacturer of temperature monitoring device, placement locations and temperature monitoring plan.]

F. RSN 03 30 00-5, Certifications:

1. NRMCA Certification of Production Facilities. NRMCA certification shall include automatic digital recording of cementitious materials, aggregate, water, and chemical admixtures.

---

[27] Delete if not required. Coordinate requirement for placement schedule with designers. Simpler jobs do not require placement schedule.

Submit RSN 03 30 00-2, Concrete Placement Drawings before or at the same time as RSN 03 30 00-3, Concrete Placement Schedule and RSN 03 20 00-1, Reinforcement Diagrams and Lists.

[28] Verify placement and reinforcement drawings are required.

[29] Delete unless RMSC included. Include when RMSC specified.

2. [30][ACI Aggregate Testing Technician certification(s).
3. ACI Concrete Flatwork Finisher certification(s).
4. ACI Concrete Field Testing Technician certification(s).
5. ACI Concrete Strength Testing Technician certification(s).]

G. [31][RSN 03 30 00-6, Estimating Concrete Strength by Maturity Method Plan:
1. List concrete placements where estimating concrete strength by maturity method will be used for early form removal or loading.
2. Name and manufacturer of maturity monitoring devices.
3. Placement locations of maturity monitoring devices.
4. Report of maturity relationships {for applicable mixes} used in accordance with ASTM C1074.]

H. RSN 03 30 00-7, Cementitious Materials Certification and Test Reports
1. Less than 3 months old.
2. Certify materials were tested during production or transfer in accordance with specified reference standards.

I. [32][RSN 03 30 00-8, Test Reports
1. Aggregate test results as required by Table 03 30 00B – Contractor Batch Plant Quality Testing.
2. Concrete test reports as required by Table 03 30 00E- Contractor Field Quality Testing.

---

30 Coordinate inclusion of certifications for technicians with appropriate Articles. Delete certifications for those technicians not included those Articles

Aggregate testing technician: Batch Plant Quality Testing (2.12)

Finishers: Finishing Article (3.06.C).

Field testing and strength testing technicians: Contactor Field Quality Testing (3.10).

31 Include only when maturity method included in specifications. See Mix Article (2.08.G)

Paragraph 4. - Delete “for applicable mixes” when there is only one mixed specified for the job.

Recommended submittal time in Table 01 33 00A: At least 28 days before using maturity values to predict strength

32 Coordinate with Contractor Quality Testing articles (2.11 and 3.10). Include RSN when Contractor Quality Testing is specified.

Recommended submittal time: Within 24 hours after completion of tests.

1.06 QUALIFICATIONS

A. Ready mix plant: Certified by NRMCA. NRMCA certification shall include automatic digital recording of cementitious materials, aggregate, water, and chemical admixtures

B. [33][ACI Aggregate Testing Technician: Currently certified ACI Aggregate Testing Technician - Level 1

C. ACI Concrete Flatwork Finisher: Currently certified as ACI Concrete Flatwork Finisher.

D. ACI Concrete Field Testing Technician: Currently certified ACI Concrete Field Testing Technician - Grade I.

E. ACI Strength Testing Technician: Currently certified ACI Strength Testing Technician]

1.07 [34][MOCK-UPS

A. {Colored Concrete Test Panels:

1. Place cast-in-place colored concrete test panels at least 28 days prior to placement of colored concrete.
2. Demonstrate forming methods and equipment for cast-in-place colored architectural concrete.}

B. {Architectural Concrete Test Panels:

1. Place cast-in-place architectural concrete test panels at least 28 days prior to placement of colored concrete.
2. Demonstrate sand-blasted finish for exposed, architectural concrete surfaces.}]

1.08 DELIVERY, STORAGE, AND HANDLING

A. Furnish legible and digitized batch ticket with each batch of concrete in accordance with ASTM C94. Deliver ticket to COR at jobsite during batch delivery.

B. [35][Sponge rubber joint filler storage:

---

33 Coordinate inclusion of qualifications for technicians with appropriate Articles. Delete qualifications for those technicians not included those Articles.

Aggregate testing technician: Batch Plant Quality Testing (2.12)

Finishers: Finishing Article (3.06.C).

Field testing and strength testing technicians: Contactor Field Quality Testing (3.10).

34 Include only when field mock-ups required for colored or architectural treatment of concrete specified. Not used very often. Edit as appropriate.

35 Delete when sponge rubber joint filler not specified. Sponge rubber joint filler used for expansion joints. See Joints and Edges Article (3.07).

1. Store in protected area at temperature of 70 degrees F (21 degrees C) or less.
2. Do not expose to direct sun.]

1.09 [36][PRE-PLACING MEETING

A. At least 14 days before first concrete placement {for _____}, meet with COR for pre-placement meeting.

B. Coordinate time and place of meeting with COR at least 14 days before meeting.

C. Contractor attendees shall be at least the following:
1. Contractor onsite supervisor.
2. Concrete forming, placing, and finishing onsite supervisor(s); Contractor or subcontractor(s) employee as applicable.
3. Technical specialist from ready-mix supplier.
4. Concrete pump subcontractor onsite supervisor, if applicable.
5. Testing agency onsite supervisor(s).]

PART 2 PRODUCTS

2.01 CEMENTITIOUS MATERIALS

A. Portland cement:
1. ASTM C150, Type [37][____].
   a. Meet equivalent alkalies requirements of ASTM C150 - Table 2.
      1) Low-alkali limitation for portland cement may be waived when tests of concrete aggregate source show that low-alkali cement is not required for ASR mitigation. See Concrete Aggregate Materials article (2.03).
   b. Meet false-set requirements of ASTM C150 - Table 4.

---

36 Include pre-placing meeting requirement based on potential problems with concrete supply, or complexity of concrete placements.

Paragraph A. - Revise time (14 days) as required. List structures that need discussions when only part of the work requires. Do not include list (i.e. delete {for___}) when all of the work needs discussion.

Paragraph B - Revise time (14 days) as required.

Paragraph C - Revise list when appropriate.

37 Specify Type. Default is type II. Consult with 86-68530 for selection. Types of portland cement covered in ASTM C150: I, IA II, IIA, II(MH), II(MH)A, III, IIIA, IV, and V. Note: I/II is not a type.

B. Blended hydraulic cement:

1. ASTM C595, Type [38] [____].

2. Meet equivalent alkalies requirement of ASTM C595, Table 2, Option G. or Table 3.

C. SCM:

1. Pozzolan:

a. ASTM C618, Class F

1) Except:

a) Sulfur trioxide, maximum: 4.0 percent.

b) Loss on ignition, maximum: 2.5 percent.

2) In addition:

a) Meets Effectiveness in Controlling Alkali-Silica Reaction in Table 3 Supplementary Optional Physical Requirements of ASTM C618.

b) Calcium oxide, maximum: 8.0 percent.

c) Pozzolan "R" factor less than 2.5. Pozzolan with this "R" factor shall not decrease sulfate resistance of concrete.

i. R = (C-5)/F

ii. C: Calcium oxide content of pozzolan in percent determined in accordance with ASTM C114.

iii. F: Ferric oxide content of pozzolan in percent determined in accordance with ASTM C114.

2. [39][Slag Cement:

a. ASTM C 989, Grade {100} or {120}.]

2.02 WATER

A. ASTM C1602, including optional requirements of Table 2.

2.03 AGGREGATE MATERIALS

A. Fine aggregate: ASTM C33

1. [40][Percent material passing No. 200 sieve: Less than 3 percent.]

---

38 IP or IS. (use HS) if type V is needed

39 Include when slag cement is option. Select appropriate grade or include both.

40 Include for most jobs. For purchasing of fine aggregate, ASTM C33, paragraph 4.2.4.3 - states "The appropriate limit for material finer than 75-µm (No. 200) sieve (see Table 1). If not stated, the 3.0% limit

B. Coarse aggregate: ASTM C33, Class 4S, Size No. specified in Table 03 30 00A – Concrete Mixes.

C. Alkali Silica Reaction (ASR):

1. Test fine and coarse aggregates in accordance with ASTM C1260 for potential deleterious ASR.

   a. [41] [For ASTM C1260, and other tests when required, continue readings for 28 days after the zero readings.

   b. Acceptance criteria specified below are based on [42][{14} {28} day readings after the zero readings.]

   c. Expansion is no greater than 0.10 percent: Aggregates are acceptable.

   d. Expansion is greater than 0.10 percent:

      1) Test aggregates according to ASTM C1567 using components (e.g. coarse aggregate, fine aggregate, cementitious materials, and ASR inhibiting admixtures) in proportions proposed for mixture design

         a) For mixes using lithium admixtures use test procedure COE CRD-C 662.

         b) Expansion of proposed mixture design test specimens, tested in accordance with ASTM C1567 does not exceed 0.10 percent:

            i. Aggregates are acceptable.

         c) Expansion of proposed mixture design test specimens is greater than 0.10 percent:

            i. Aggregates are not acceptable unless adjustments to mixture design can reduce expansion to less than 0.10 percent, or testing by ASTM C1293 indicates aggregates will not experience deleterious expansion.

      2) Use tested materials. Materials may be rejected if they do not match tested materials.

---

shall apply." Table 1 allows up to 3% passing the 75-µm (No. 200) sieve for concrete subject to abrasion, and up to 5% passing the 75-µm (No. 200) sieve for all other concrete. Including the statement in the specs precludes any ambiguity for that requirement.

41 Include when slow or late reacting aggregates are a possibility. Extended testing ages are necessary for regions with slow reacting aggregates; based on preliminary aggregate survey or local experience. Known areas include but are not limited to parts of ID, NM, and AZ. The normal period for taking readings is 14 days after the zero reading.

42 Select appropriate days for readings. 14 days is appropriate unless slow or late reacting aggregates are possible. See previous footnote.

2. ASTM C1293 test results may be substituted for ASTM C1260 test results.

   a. Average ASTM C1293 concrete prism expansion less than 0.04 percent at one year: Aggregates acceptable.

D. Appropriate for use in accordance with ASTM C 295.

2.04 ADMIXTURES

A. Air-entraining admixture: ASTM C260.

B. Chemical admixtures:

1. Do not use chemical admixtures which contain more than 0.1 percent chloride, by weight.
2. Admixtures shall be compatible with each other.
3. Allowable chemical admixtures:
   a. [43]ASTM C494, Type A, D, F, G, or S.
   b. [44]ASTM C1017, Type I or II.
   c. [45][ASTM C494, Type C and E, provided they do not contain chlorides.]

C. [46][Specialized chemical admixtures:

1. When batch plant has not previously used a specialized chemical admixture, admixture manufacturer shall provide on-site representative to assist with mix design and to trial batch plant personnel in dispensing and mixing operations.
2. Do not use specialized chemical admixtures which contain more than 0.1 percent chloride, by weight.
3. [47] [CDSRA:

---

[43] Admixture types:

A – Water-reducing Admixtures
D – Water-reducing and retarding admixtures.
F – Water-reducing, high range admixtures
G – Water-reducing, high range, and retarding admixtures
S - Specific performance admixtures

[44] Admixture types:

I – Plasticizing
II – Plasticizing and retarding.

[45] Include for cold weather use or when high-early strength is required only. Admixture types:
C – Accelerating admixtures
E – Water-reducing and accelerating admixtures

[46] Include specialized admixtures only when required. Coordinate with Mix article.

[47] Include only when low shrinkage concrete specified. Typically only needed for thin overlays or placement where recommended maximum joint spacing will be exceeded. Coordinate with Mix article.

a. PREVent-C manufactured by Premier Magnesia, Construction Products Group. www.premiercpg.com; or equal, with the following essential characteristics:

1) Designed to facilitate expansion of concrete at essentially the same rate as shrinkage during curing period.

2) Designed to reduce capillary surface tension of pore water.

3) Provides at least 60 percent shrinkage reduction.

4) Formulated for use in freezing weather.

5) Mortar and concrete under restrained shrinkage test, ASTM C1581: No cracking for minimum 90 days.

b. Coordinate with manufacturer regarding dosage.]

4. [48][SRA:

a. ASTM C494, Type S

b. Provides length change not exceeding 0.05 percent when tested in accordance with ASTM C157.]

5. [49][Alkali Silica Reaction (ASR) Inhibiting Admixture:

a. Lithium Nitrate Admixture for ASR mitigation of reactive aggregates having the following characteristics:

1) Meets NSF/ANSI 61.

2) Nominal 30 percent aqueous solution of Lithium Nitrate

a) Density: 10 pounds/gallon [1.2 kg/L}.

b) Approximate chemical constituents (percent by mass):

i. LiNo3 (Lithium Nitrate): 30 plus or minus 0.5

ii. SO4-2 (Sulfate Ion), maximum: 0.1

iii. Cl- (Chloride Ion), maximum: 0.2

iv. NA+ (Sodium Ion), maximum: 0.1

v. K+ (Potassium Ion), maximum: 0.1

b. Coordinate with manufacturer regarding Lithium Nitrate dosage.]

c. Do not use Lithium Nitrate Admixture for concrete in continuous or nearly continuous contact with water.

6. [50][Extended set control admixture:

---

48 Include when drying shrinkage reduction is required vs. chemical and drying shrinkage reduction. Contact 86-6180 before specifying

49 Include for VERY SEVERE ASR ONLY. Contact 86-68180 before specifying.

a. [51]Delvo Stabilizer manufactured by BASF Construction Chemicals, Inc. www.basf-admixtures.com; or equal, with the following essential characteristics:

1) Meets ASTM C494, Type B.

2) Retards setting.

3) Does not reduce concrete strength.

b. Use within manufacturer's time limits.

c. Include admixture on batch ticket.

d. Admixture quantity required to stabilize concrete shall be pre-determined using jobsite materials. Initial concrete setting time shall be monitored and adjusted during project by qualified concrete technician.

7. [52][Viscosity Modifying Admixture:

a. V-Mar 3 manufactured by Grace Concrete Products, www.na.graceconstruction.com; or equal with the following essential characteristics:

1) Meets ASTM C494 Type S.

2) Designed to increase viscosity of concrete while still allowing concrete to flow without segregation.

3) Does not contain chlorides.

4) Does not significantly affect slump, air content or time of set.

b. For controlling rheology of concrete mixtures: Incorporated into concrete mix at batch plant in manufacturer's recommended dosage.]

8. [53][Anti-washout admixture:

a. Rheomac UW 450 manufactured by BASF Construction Chemicals, Inc., www.basf-admixtures.com; or equal with the following essential characteristics:

1) Water-soluble polymer.

2) Designed to minimize washout of fines and cement.

3) Does not significantly affect slump or time of set.

---

[50] Include extended set control admixture only when concrete haul times are expected to be greater than 90 min. ASTM C 494 Types D and G are also retarding (are water reducing and retarding). They are allowed in paragraph B - Chemical admixtures.

[51] Use Delvo stabilizer to control cement hydration for concrete subjected to hauls in excess of 1-1/2 hours or concrete placements requiring specific delays in setting time.

[52] This admixture is used to prevent segregation and is often used when pumping concrete.

[53] Use when placing concrete underwater.

b. For {fresh concrete placed in contact with water} {drilled shaft} concrete only.

c. Incorporate into concrete mix at batch plant in manufacturer's recommended dosage.]

2.05 [54][CONCRETE COLOR ADMIXTURES

A. Integral color additive made for use in concrete.

B. {Color chart number/ name}, manufactured by { }; or equal with the following essential characteristics:

1. Concentrate mineral pigment milled for mixing into concrete.
2. Resistant to alkalis, weathering, and ultraviolet.
3. Meets ASTM C979.

C. Obtain COR approval of color selection of color additive prior to casting {items of colored concrete} {colored concrete test panels}.]

2.06 CURING MATERIALS

A. Water: ASTM C1602, including optional requirements of Table 2.

B. [55][Curing compound: {ASTM C309} {ASTM C1315}.

---

54 Include only when color concrete specified. When test panels are required, coordinate with mock-ups article in Part 1.

55 For general construction, specifying C309 for curing compound is adequate. ASTM C1315 would only be specified when special properties are required. ASTM C1315, Class A is specified when non-yellowing curing compound is required. ASTM C309-11, Section 6 limits moisture loss to 0.55 kg/m2 in 72 hours. ASTM C1315-11, Section 6 limits moisture loss to 0.40 kg/m2 in 72 hours

Curing compound types:

ASTM C309:

Type	Description
Type 1	Clear or translucent without dye
Type 1-D	Clear or translucent with fugitive dye
Type 2	White pigmented

(dissolved solids shall be one of the classes)

Class	Description
Class A	No Restrictions
Class B	Must be a resin defined in Terminology D883

ASTM C309 compounds are generally easy to remove. Class A is wax base, general purpose. Class B is resin base, will meet Class A, and clings better to vertical surfaces.

ASTM C1315:

Type	Description
Type I	Clear or translucent

Class	Description
Class A	Essentially non-yellowing

1. Capable of meeting moisture retention at manufacturer's application rate.
2. Meet Federal, state, and local regulations for VOCs.

C. Sheet materials:

1. Polyethylene film: ASTM C171, [56][{white opaque} {clear}].
2. [57][White burlap-polyethylene sheeting: ASTM C171.]

2.07 ACCESSORIES

A. [58][{Sponge rubber joint filler:

1. ASTM D1752, Type I, except:
   a. Test specimen compression load: 50 to 150 lb/in^2.
2. Joint filler adhesive: Nonbituminous adhesive recommended by filler manufacturer.}

B. {Bituminous joint filler: ASTM D1751.}]

C. [59][Elastomeric sealant: ASTM C920, polyurethane, Use M, Grade NS, Class 25.]

D. [60][Temperature monitoring devices for monitoring RSMC placements :

Type II	White pigmented

Class B	Moderate yellowing not prohibited
Class C	Not restricted with regard to yellowing or darkening

ASTM C1315 is more permanent and is also considered as a sealer. Often used on bridge structures and roadways. It adds salt protection, resists drying and sunlight, and is super high performance. ASTM C1315 compounds are generally significantly more costly than ASTM C309 compounds.

56 Specify white opaque for exterior use. Specify clear for interior use.

NOTE: Do not specify "Black" - ASTM C171 includes only clear and white opaque as types for polyethylene film. Black is not a color option. Also, black polyethylene film would not increase the protection of concrete from freezing during cold weather (coldest temperatures occur when the sun is not shining). Specifying black polyethylene film could result in temperature rise during the day that could cause undesirable thermal stresses in the concrete. Protection of concrete during cold weather is addressed in Protection article.

57 Include when specified in "Formed Surfaces" and "Unformed Surfaces" tables. Use for colored concrete flatwork or other flatwork

58 Include when expansion joints specified. Include appropriate paragraphs for type of material used for expansion joints. Delete when expansion joints not required.

59 Include only when elastomeric sealant required and is not specified in another Section. Sealants often covered in Division 7. Class M - multicomponent. Grade NS - nonsag when applied between 40 and 122 degrees F. Class 25 - withstands 25 percent decreases or increase in joint width.

60 Include when RSMC specified

1. Measuring device: Thermocouple, thermistor, or Resistant Temperature Device (RTD)
   a. Operating range: 14 degrees F to 185 degrees F.
   b. Accuracy: 1.8 degrees F (1 degree C) or better.]
2. Recording device:
   a. Record temperature as a function of time.
   b. Records temperature at least once per hour and maximum and minimum over a 24-hour period can be obtained.
   c. Records data in digital format.

E. [61][Temperature monitoring devices for estimating concrete strength by the maturity method:
1. Embedded digital devices that measure temperature with recording device that stores data as a function of time.
2. Measuring devices:
   a. Thermocouple, thermistor, or Resistant Temperature Device (RTD)
   b. Accuracy: 1.8 degrees F (1 degree C) or better.
3. Recording device:
   a. Commercial maturity instruments that automatically compute and display either temperature-time factor or equivalent age.
   b. Recording time interval shall be 1/2-hr or less for the first 48 hours and 1-hour or less thereafter.]

F. [62][Evaporation control:
1. MasterKure ER 50 manufactured by BASF Construction Chemicals, Inc., www.basf-admixtures.com; or equal having the following essential characteristics:
   a. Monomolecular film forming compound applied to exposed concrete slab surfaces for temporary protection from rapid moisture loss.
   b. For application after finishing and prior to applying curing compound.
   c. For use when the evaporation rate is high.
2. Do not use as finishing aid.]

---

[61] Include when estimating concrete strength by maturity method specified.

[62] Include only when extra low humidity and high wind situations are anticipated or silica fume concrete is specified. Consult 86-68530 for proper use

G. [63][Plastic vapor retarder:

1. Preformed flexible membrane meeting ASTM E1745, Class { }.

   a. Thickness: 10 mils, minimum.

2. Sealing materials for laps and protrusions: Recommended by manufacturer.]

2.08 MIX

A. The Contractor shall design and adjust concrete mix.

1. [64]The Government reserves the right to adjust mix proportions when need for adjustment is indicated by results of materials testing.

   a. When required, adjustment of mix proportions by the Government will be in accordance with USBR Concrete Manual.

B. [65][Cementitious materials options:

1. [66][Specified portland cement only.]
2. Specified portland cement plus specified pozzolan by percent weight specified in Table 03 030 00A - Concrete Mixes.
3. [67][Specified portland cement plus specified slag cement by percent weight specified in Table 03 03 00A - Concrete Mixes.]
4. [68][Blended Hydraulic: ASTM C595 provided, specified portland cement with percent of specified pozzolan or specified slag cement specified in Table 03 03 00A - Concrete Mixes.]

---

63 Include only when specified. Typical use of plastic vapor retarders are on top of soil or granular fill beneath concrete building slabs. Vapor retarders reduce moisture condensation within a structure therefore impeding growth of molds, mildews, and fungi; protect flooring materials installed on the concrete slab from detrimental moisture; and can be used a component of sulfate resistance or radon mitigation systems.

ASTM E1745 specifies three classes - A, B, and C. All three classes require maximum water vapor permeance of 0.3 perms. The difference between the classes is the tensile strength and puncture resistance, with Class A being the strongest (see ASTM E1745 for values). Minimum mil thickness requirement would be in addition to ASTM E1745 requirements. It may be desirable to specify minimum thickness to get a stronger material. The 10 mil thickness is only an example.

Add ASTM E1745 to Reference Standards article.

Vapor retarder for walls would be covered in Div. 7

64 Use statement at client's request

65 Modify allowed cementitious materials options as appropriate for job.

66 Include only when circumstances require. Examples when portland cement only will be required or allowed are high early strength concrete or integrally pigmented concrete. Consult with 86-68530 for structural concrete requiring high early strength. Coal fly ash (Class F pozzolan) may not be suitable for inclusion with pigments. Consult with project architect for integrally pigments concrete. If fly ash will not be allowed, complete form "Exception to the Use of Recovered Materials."

67 Include when slag cement option is specified in Table 03 30 00A - Concrete Mixes.

5. [69][Ternary blends.]

C. Design concrete mixes in accordance with Table 03 30 00A – Concrete Mixes. General concrete mix shall be used for concrete unless otherwise specified.

1. Net water-cementitious materials ratio (w/c) is maximum, by weight. Cementitious material weight is cement plus SCM.

2. [Slump at point of placement: In accordance with ASTM C143{, except SCC

3. SCC slump flow at point of placement: In accordance with ASTM C1611.]

4. Air Entrainment: Percent air by volume of concrete as discharged at point of placement, in accordance with ASTM C231.]

[70]Table 03 30 00A – Concrete Mixes

Mix No	Feature	f'c (lb/in^2)	[71]Max w/c*	[72]NMSA **	Percent SCM*** A: Class F Pozzolan B: Slag Cement C: Silica Fume	Slump [73][or Slump flow] (in)	[74]Air Content (%)	Notes
1	General Concrete	4500 at 28 days	0.45	[No. 457, 57, 467, or 67]	A or B: 20 ± 5	2 to 4	4.5 to 7.5	
2	Structural Concrete	4500 at 28 days	0.45	[No. 457, 57, 467, or 67]	A or B: 20 ± 5	2 to 4	4.5 to 7.5	[1, 5]

68 Edit as appropriate for inclusion of pozzolan and/or slag.

69 Include only when needed to achieve specified mix properties. Ternary blends are a combination of three or more cementitious materials, sometimes necessary to obtain special properties, including ASR mitigation of highly reactive aggregates.

70 Revise table for project requirements. Feature names provided are some of the more typical examples. Delete unnecessary rows. Fill in all cells for mixes specified.

71 Select w/c ratio based on durability requirements (freeze/thaw, sulfate resistance) and desired strength. Consult 86-68530 and designers. See table 5, USBR 4211, USBR Concrete Manual, Part 2, Ninth Edition. A w/c of 0.45 should be the maximum selected for most jobs. A lower w/c may be required for some applications – durability issues, saturated concrete, exposer to freeze/thaw.

72 Select appropriate size. Consult 86-68530 and designers. Recommended sizes for most applications: ASTM C 33 No. 467 (1-1/2 in. to No. 4) or No. 57 (1 in. to No. 4).

73 Slump flow required for SCC. Delete when SCC not included.

74 Select air content based on maximum aggregate size and freeze-thaw environment; see Concrete Manual or ACI 318.

[70]Table 03 30 00A – Concrete Mixes

Mix No	Feature	f'c (lb/in^2)	[71]Max w/c*	[72]NMSA **	Percent SCM*** A: Class F Pozzolan B: Slag Cement C: Silica Fume	Slump [73][or Slump flow] (in)	[74]Air Content (%)	Notes
3	High Slump Structural Concrete	4500 at 28 days	0.45	[No. 457, 57, 467, or 67]	A or B: 20 ± 5	4 to 7	4.5 to 7.5	[1, 2, 5]
4	Interior Slabs	4500 at 28 days		[No. 457, 57, 467, or 67]	A or B: 20 ± 5	2 to 4		[1,5]
5	RSMC	4500 at 56 days		[No. 467]	A: 35 ± 10 or B: 50 to 80	1 to 3		[1,3,5]
6	Drilled Shafts	4500 at 28 days		[No. 57 or 67]	A or B: 20 ± 5	5 to 7		
7	Lean Concrete	2500 at 28 days		[No. 57 or 67]	A or B: 20±5			
8	Colored Concrete	4500 at 28 days	0.45	[No. 457, 57, 467, or 67]	A or B: 20±5	2 to 4	4.5 to 7.5	[5]
9	SCC	4500 at 28 days	0.45	1/2 inch	A: 20±10 or B: 20 to 70 Or A+B<70	22 to 24	5.5 to 8.5	[1,2,6,7, 8]
10	High Strength	8000 at 28 days			C: 5 to 10			[1,2,5]

[70]Table 03 30 00A – Concrete Mixes

Mix No	Feature	f'c (lb/in^2)	[71]Max w/c*	[72]NMSA **	Percent SCM*** A: Class F Pozzolan B: Slag Cement C: Silica Fume	Slump [73][or Slump flow] (in)	[74]Air Content (%)	Notes

[75] *Maximum water/cementitious materials ratio.
**Nominal Maximum Size Aggregate.
*** SCM as percent of total cementitious material, by weight.
[76] [NOTES:
1. Ternary blended cementitious materials which meet the specifications may be submitted for approval.
2. Concrete with ASTM C1017, Type I or II plasticizing admixtures, ASTM C494 Type F high-range water-reducing admixtures, or Type G high-range water-reducing and retarding admixtures:
   i. Admixture shall be incorporated into trial batch or historical data.
   ii. Use slump appropriate for placing conditions.
3. RSMC requires temperature control measures.
4. Color admixture dosage rate as recommended by the manufacture
5. CDSRA required. Shrinkage Test results shall be submitted with mix design. See Shrinkage Testing Procedure paragraph.
6. SRA required. Shrinkage test results shall be submitted with mix design. Test mix in accordance with ASTM C157.
7. Aggregate gradation for SCC concrete may deviate from ASTM C33.
8. For SCC, deviating from the table may be acceptable provided resulting mixture meets performance targets for fresh and hardened SCC and deviations are approved by COR.]

D. Submit design mixes for each type and strength of concrete substantiated by either laboratory trial batch or field performance methods as specified in ACI 301. For trial batch method, mix shall be proportioned and stamped by a professional engineer.

E. Concrete trial mixes:

1. [77]Average compressive strength of trial batch cylinders at design age: Design strength {plus 1,200 lbs/in^2 for concrete between 3,000 and 5,000 psi}, {1.10f'c + 700 psi for concrete with specified design strength greater than 5,000 psi}.

[75] Editing note: These asterisk notes and "NOTES" are contained within a single cell at the bottom of the table.

[76] Revise, add, or delete notes to agree with table. Verify Shrinkage Testing Procedure article number when CDSRA specified.

[77] Determine criteria for overdesign based on mixes listed in Table 03 30 00A – Concrete Mixes.

2. [78][Average 28 day compressive strength of trial batch cylinders for lean concrete only: Design strength plus 500 lbs/in^2, or field data meeting the over design requirements of ASTM 301.]

3. Admixtures to be used in mix shall be incorporated into mix design submitted for approval.

4. Air content: Within 1 percent of top of specified range.

5. Slump: Within 1 inch of top of specified range.

6. [79][When CDSRA required:

   a. Mortar and concrete under restrained shrinkage test in accordance with ASTM C1581.

   b. Except, no cracking for minimum of 90 days.]

7. [80][When SRA required:

   a. Mortar and concrete tested in accordance with ASTM C157.

   b. Except: Length change shall not exceed 0.05 percent after 7 days of moist curing followed by 28 days of air drying.]

F. [81][Estimating concrete strength by maturity method:

1. Prepare concrete maturity calibration mixture test specimens with same mixture proportions, materials sources, admixture dosages, and fresh properties for which maturity method will be applied.

2. Cast test specimens cast for maturity calibration from same batch of concrete and cure in same conditions and temperature.

   a. Specimens for maturity calibration mixtures may be prepared from either laboratory trial batches or from field specimens cast and cured in conditions similar to project conditions. If the later method is used, maturity relationships cannot be used to predict strength until maturity report has been submitted and approved by the COR.

3. Test compressive strength cylinders in pairs. Schedule tests such that at least three sets of tests yield results which are at or below [82] [2000 psi] and at least one set is above [2000 psi]. Perform testing is accordance with ASTM C39.]

---

[78] Include only when lean concrete specified.

[79] Include only when CDSRA required.

[80] Include only when SRA required.

[81] Include only when use of estimating concrete strength by maturity method is appropriate for the job.

[82] Strength appropriate for early form stripping, loading, backfill, traffic, etc.

2.09 BATCHING, MIXING, AND TRANSPORTING

A. Batch plant: NRMCA certified with automatic digital recording of cementitious materials, aggregate, water, and chemical admixtures

B. Manufacture and deliver in accordance with ASTM C94 and ACI C304R.

1. Prepare batch ticket in accordance with ASTM C94 for every batch of concrete.

C. [83][Cold weather: When air temperature has fallen to or is expected to fall below 40 degrees F, prepare ingredients and mix in accordance with ACI 306.1.

1. Do not use frozen materials or materials containing ice or snow.

2. Uniformly heat water and aggregates before mixing to obtain concrete mixture temperature of not less than 50 degrees.]

D. [84][Hot Weather: When precautions are necessary, prepare ingredients and mix in accordance with ACI 305.1.

1. Cool ingredients before mixing to maintain specified maximum concrete temperature at time of placement

2. Mixing water may be chilled or chopped ice may be used to control temperature, provided water equivalent of ice is calculated to total amount of mixing water. Ice replacing batch water shall be melted prior to discharge

3. Using liquid nitrogen to cool concrete is Contractor's option.

E. Prevent appreciable segregation of ingredients.

F. Place concrete within 90 minutes from introduction of cement to water or aggregates.

1. [85][For placing times exceeding 90 minutes, extended set control admixtures may be used when approved by COR.]

2.10 CONCRETE TEMPERATURE

A. [86][Concrete temperature at placing:

1. Concrete other than RSMC: 50 to 90 degrees F (10 to 32 degrees C).

---

83 Include when cold weather concreting is possibility.

84 Include when hot weather concreting is possibility.

85 Include only when expected haul distance or other factors will result in the Contractor not being able to reasonable place concrete within the 90 minute window. When this statement is included, include extended set control admixture in Admixture article.

86 When job does not include RSMC, include temperature range on first line.

When job includes RSMC, include two subparagraphs.

Revise temperature ranges when necessary.

2. RSMC: 50 to 70 degrees F (10 to 21 degrees C).]

   a. Maximum temperature may be lower according to the Temperature Control Plan.

2.11 [87][CONTRACTOR QUALITY TESTING

A. [88][{Contractor} {Independent testing agency}] shall perform sampling, testing, and reporting as required in Table 03 30 00B - Batch Plant Testing.

---

87 Before editing the Contractor Quality Testing and Quality Assurance Articles, the specifications author should be aware how the office responsible for field inspection plans to have quality testing of concrete performed. This would best be accomplished by contacting that office.

The major issue concerning quality testing of concrete is what party will perform testing that will be used to determine acceptability of work. Primary responsibility for quality testing for acceptance is anticipated to be one of the following scenarios. They are listed in preferred order of acceptance testing:

Government personnel perform full Quality Assurance testing

Government retains independent testing agency to perform full Quality Assurance testing

Contractor required to retain independent testing agency to perform testing

Include the Contractor Quality Testing Article when the Contractor is required to retain independent testing agency to perform quality testing that the Government plans to use for acceptance. The Contractor Quality Testing Article is optional when the Government or Government retained testing agency will be performing Quality Assurance testing. Quality testing by the Contractor would then be presumed to be part of the Contractor's Quality Control program.

Recommended practice for Reclamation is to have Government personnel perform full Quality Assurance testing of concrete. When Government personnel will not be performing full Quality Assurance testing of concrete, an option is for the Government to contract with a testing agency to perform Quality Assurance testing. The specifications would be the same for these two situations. Testing agency personnel would be acting on behalf of the Government when performing tests, so the relationship to the construction Contactor would be the same if Government personnel were performing the tests.

When Government personnel or Government retained testing agency personnel will be performing Quality Assurance testing, the Contractor Quality Testing Article may be deleted. The clause at FAR 52.246-12, Inspection of Construction states "the Contractor shall maintain an adequate inspection system and perform such inspections as will ensure that the work performed under the contract conforms to contract requirements." Tests specified in the Article should be part of the Contractors inspection system. Generally, Reclamation does not specify details of Contractor's Quality Control. However, this article can be included when requested by the inspection office. In this situation, the Contractor would generally not be required to retain an independent testing agency to perform concrete quality tests. Contractor quality tests could be performed by qualified Contractor or batch plant personnel.

When the inspection office plans to use Contractor performed testing in lieu of Government Quality Assurance testing for acceptance of work (i.e. Government personnel or Government retained testing agency personnel will not perform full Quality Assurance testing of concrete), the Contractor shall be required to retain an independent testing agency to perform quality testing of concrete. When independent testing agency is specified, include Section 01 46 20 - Testing Agency Services in specifications. Include Cast-In-Place Concrete in list of Sections requiring testing in Section 01 46 20. (Note: Having a testing agency hired by the Contractor to perform tests that are anticipated to be used for acceptance is less desirable than having the tests performed by Government personnel or a Government retained testing agency. Government contract personnel need to be aware that there is added risk of false reporting when the Contractor pays the testing agency that is performing tests that are anticipated to be used for acceptance.)

When Contractor Quality Testing Article is included, see next two footnotes for recommended editing.

See Section 01 46 00 - Quality Procedures for definitions of Quality Assurance, Quality Control, and Contractor Quality Testing.

1. [89][Independent testing agency shall meet requirements specified in Section 01 46 20 - Testing Agency Services.]

2. Personnel conducting tests: Qualified as ACI Aggregate Testing Technician, Level 1; or equal.

B. Perform tests at least as often as frequencies specified in Table 03 30 00B - Batch Plant Testing.

C. Notify COR immediately of test results showing failure of materials to meet specifications. Provide passing test to COR within 24 hours. Submit reports of test results as specified.

2.12 GOVERNMENT CONTRACT QUALITY ASSURANCE - SOURCE

A. [90][The Government will perform, as a minimum, tests listed in Table 03 30 00B - Batch Plant Testing. This testing is in addition to the Contractor's Quality Control program and does not relieve the Contractor of performing adequate Quality Control testing. The list of tests is provided to alert the Contractor to potential impacts to work scheduling.

B. Government testing frequency is at the discretion of the COR. Greater frequency testing is normally performed at start of placing a mix design, when changing a mix design, when inconsistencies of materials is noticed, or when significant changes are made at batch plant. Testing frequency listed in Table 03 30 00B - Batch Plant Testing is provided only as approximation of Government testing.]

C. [91][In addition to specified Contractor Quality Testing, the Government may also perform the tests listed in Table 03 30 00B - Batch Plant Testing.]

2.13 BATCH PLANT TESTING

---

88 Select "Contractor" when Government will be performing Quality Assurance testing. Requiring the Contractor to hire an independent testing agency is usually not needed when the Government will perform full Quality Assurance testing.

Select "Independent testing agency" when Government plans to perform little or no Quality Assurance testing and plans to use independent testing agency test results for evaluating acceptability of work.

See previous footnote.

89 Include only when independent testing agency required to perform testing.

90 Include paragraphs A and B when the Government will be conducting full Quality Assurance testing of concrete. See footnote for Contractor Quality Testing article (2.11) for discussion of Reclamation practice. As noted in paragraph A, this information is provided to the Contractor for information as to potential impacts for scheduling his activities.

91 Include paragraph C only when the Government will be performing little or no Quality Assurance testing. The Contractor is required to retain independent testing agency to perform tests that the Government anticipates using for determining acceptability of work. See footnote for Contractor Quality Testing article (2.11) for discussion of Reclamation practice

Table 03 30 00B- Batch Plant Testing

TESTS OF	TEST STANDARD	STANDARD TITLE	REQUIREMENT	[92]TESTING FREQUENCY
Aggregate Gradation	ASTM C136	Sieve Analysis of Fine and Coarse Aggregates	Fine and Coarse Aggregate meets sizing requirements per ASTM C33.	At beginning of placing each mix. At change in mix design. At least every 500 yd3 of placing a mix.
Aggregate Fines content	ASTM C117	Materials Finer than 75-µm (No. 200) Sieve in Mineral Aggregates by Washing	Fine aggregate meet specified allowable fines content (material passing No. 200 sieve)	At beginning of placing each mix. At change in mix design. At least every 500 yd3 of placing a mix.
Aggregate moisture content	ASTM C566	Total Evaporable Moisture Content of Aggregate by Drying	Verify that moisture meter at batch plant is accurate with the material batched.	At beginning of placing each mix. At change in mix design. At least every 500 yd3 of placing a mix.

PART 3 EXECUTION

3.01 PREPARATION

A. Remove standing water, mud, and debris from foundation surfaces to be covered by concrete.

B. Prepare rock surfaces free from oil, objectionable coatings, and loose, semidetached, and unsound fragments. Immediately before placement of concrete, wash rock surfaces with air-water jet and dry to uniform surface-dry condition.

C. Prepare earth foundations free from frost or ice.

D. Thoroughly moisten surfaces of absorptive foundations to be covered with concrete so that moisture will not be drawn from fresh concrete. Keep subgrade moisture uniform without puddles or dry areas.

E. [93][Vapor retarder:

1. Place vapor retarder membrane over foundations to be covered with concrete {at locations shown on drawings}.

[92] Revise testing frequencies as appropriate for job.

[93] Typical use of vapor retarder is under building slabs. For discussion of use, see footnote for vapor retarder material in Accessories Article (2.07). Delete when vapor retarder not used.

a. Where vapor retarder is installed, moistening absorptive foundations specified above will not be required.

2. Overlap sheets minimum of 6 inches and seal as recommended by manufacturer.

3. Seal penetrations as recommended by membrane manufacturer.]

F. Clean, roughen, and surface dry surfaces of construction joints [94][and existing concrete] to be covered with fresh concrete.

1. Remove laitance, loose or defective concrete, coatings, sand, curing compound, and other foreign material.

2. [95]Sandblast, steel shotblast, or high-pressure water jet surfaces, or use other method approved by COR to create a surface {equivalent to or larger than CSP 5 in accordance with ICRI 310.2}{equivalent to or larger than CSP 8 in accordance with ACI 318}.

3. Wash surface thoroughly, and surface dry immediately before placement of adjoining concrete.

3.02 [96][TEMPERATURE CONTROL OF RSMC

A. Design RSMC Temperature Control Plan for:

1. Maximum temperature of 155 degrees F in concrete during curing and protection.

2. Maximum temperature differential of 35 degrees F between center of thickest section and outside face.

3. Installation and monitoring of at least 2 monitoring devices for every 150 cubic yards of concrete or each individual placement at each of the following locations:

a. At center of thickest sections.

b. Along coolest anticipated concrete face(s) at depth of 1-1/2 inches from surface.

4. Monitoring ambient temperature for temperature control duration.

B. Install temperature monitoring devices prior to placement according to approved RSMC Temperature Control Plan.

C. Continually record temperature readings until temperature differentials are within requirements. Temperature information in digital format shall be available to COR daily.

---

[94] Include when required.

[95] Choose CSP 5 for most cases and CSP 8 if shear transfer is needed. For shear, Refer to ACI 318, Section 11.6.9, (¼" amplitude required).

[96] Include this Article only when job includes RSMC.

D. Maintain specified temperature differential between temperature monitoring devices at center of thickest section and outside face.

1. Insulate concrete with blankets or other approved insulation as necessary.
2. Do not discontinue temperature monitoring or remove insulation until temperature at outside face is within 35 degrees F of lowest ambient temperature in 24 hour period.
3. Internally cool concrete as necessary.
4. Evaluate temperature records daily and adjustment temperature control methods as necessary.

E. If internal concrete temperatures or concrete temperature differentials exceed specified limits, revise RSMC Temperature Control Plan and resubmit for approval prior to further placements.]

3.03 [97][MONITORING FOR ESTIMATING CONCRETE STRENGTH BY MATURITY METHOD

A. Monitor internal concrete temperature with a minimum of two (2) monitoring devices every 150 cubic yards of concrete or in each individual placement.

B. Position maturity testing sensors throughout the placement. Locate at least one recording device within the final load of concrete from each placement and in areas of excess shade.

C. Install temperature monitoring sensors prior to placement according to approved maturity meter plan.

D. Do not pass wires through {unformed finished surfaces} {ogee crest} except as approved by the COR.

E. Compliance with project specifications for design strength of concrete will continue to be based on standard laboratory cured 6- by 12-inch cylinders tested at design age.]

3.04 PLACING

A. Notify COR at least 24 hours before placing concrete.

B. Do not place concrete without approval of the COR.

C. Place concrete in presence of COR.

---

97 Include this Article only when time available for construction is so limited that the Contractor will be required to impose loads on concrete placements before the time of design strength age has elapsed. Typical uses include determining strength for form stripping, backfilling, post tension stressing, and pavement early opening.

D. [98][Placing concrete {for placement specified below} shall be performed under direct supervision of a Craftsman certified as ACI Concrete Flatwork Finisher.

1. A minimum of one certified ACI Concrete Flatwork Finisher is required at each {specified} placing operation.

2. {Placements requiring ACI Concrete Flatwork Finisher:}

a. {list placements}]

E. [99][Allow at least 7 days between adjacent placements, or as approved by COR.

1. [100][For RSMC, COR may require more than 7 days between adjacent placements based on temperature control plan or actual temperature data of RSMC.]

F. Do not use aluminum pipes and chutes for placing or pumping concrete.

G. Adding water to concrete batch at site will be allowed only once and only when approved by the COR.

1. Additional water shall be added before concrete is discharged.

2. Do not exceed specified water to cement ratio.

3. After water is added, concrete shall be mixed for at least 30 revolutions of mixer drum at mixing speed.

4. Record added water on the batch ticket to nearest gallon.

H. Adding air entraining admixtures to concrete batch at site will be allowed only once when approved by the COR.

1. After air entraining admixture is added, concrete shall be mixed for minimum of 30 revolutions of mixer drum at mixing speed.

2. Take slump and air content after air-entraining admixture addition and additional revolutions.

3. Record added air entraining admixture on batch ticket to nearest ounce.

---

98 Include only when determination is made that placing concrete shall be done under the supervision of certified ACI Concrete Flatwork Finishers. List structures when some, but not all, of the concrete placements require supervision by certified finisher. When all concrete placements require supervision by certified finisher, delete the list and "for the structures specified below", and "specified" in subparagraphs 1 and 2.

Note: ACI Concrete Flatwork Finisher certification requires passing a written test plus successfully completing a performance examination and possessing actual on-the-job finishing experience (performance test plus 1,500 hours experience), or possessing a higher level of actual on-the-job experience (4500 hours experience). ACI also has certification for a Concrete Flatwork Technician. This certification has less rigorous qualification requirements and is not recommended.

99 Include when delay between placements is required. Consult with designer about including this requirement. When used, revise delay time as appropriate.

100 Include only when RSMC specified.

I. Do not use concrete which has become so stiff that concrete cannot be properly placed.

J. Place formed concrete in continuous, approximately horizontal layers. Do not exceed 20 inches in depth of layers.

K. Vibrate concrete until concrete has been consolidated to maximum practical density, is free from pockets of coarse aggregate, and closes snugly against surfaces of forms and embedded materials.

L. Hot Weather:

1. Place concrete in accordance with ACI 305.1.
2. Protect reinforcing steel so that steel temperature does not exceed ambient air temperature immediately before placing concrete.
3. Fog spray forms, reinforcing steel, and subgrade just before placing concrete. Keep subgrade moisture uniform without puddles or dry areas.

M. Cold weather:

1. Place concrete in accordance with ACI 306.1.
2. Do not place concrete on frozen subgrade or subgrade containing frozen materials.

N. [101][Colored Concrete:

1. Schedule placement of cast-in-place colored architectural concrete so that adjacent placements of colored concrete are placed within 2 weeks time.
2. Cast field cured test cylinders to determine compressive strength of concrete prior to application of light sand-blast finish. Schedule sand-blasting so surfaces of cast-in-place colored concrete are same strength.
3. Perform light sand-blast finish to cast-in-place colored concrete in accordance with ACI 303. Surface of light sand-blast finish should expose fine aggregate and occasional coarse aggregate with a maximum reveal of approximately 1/16- inch.]

3.05 [102][PLACING CONCRETE UNDERWATER

A. As concrete is placed underwater, do not allow turbid water to discharge into Waterways.

1. For discharge of turbid water, refer to Section 01 57 30 – Water Pollution Control.
2. Placement operations shall not increase pH, turbidity, or temperature of water.

B. Equipment:

---

[101] Include only when colored concrete required.

[102] Include only when concrete placing underwater is required. This article written for drilled shafts. It can be revised for other applications.

1. Not fabricated of aluminum.
2. Provide suitable tremie delivery system or pump:
   a. Tremie system:
      1) Delivery system shall be watertight, fabricated of heavy-gauge steel pipe.
      2) Tremie pipe diameter: At least 6 times maximum size of aggregate but not less than 10-inches in diameter.
      3) A funnel or hopper shall facilitate transfer of concrete from delivery device to the tremie.
      4) Provide stable, stationary platform to support tremie during placement.
   b. Pump:
      1) Slickline shall be watertight.
      2) Slickline minimum diameter: 5 inches.
3. Mark tremie pipe or pump slickline to allow quick and accurate determination of distance from surface of water to mouth of discharge pipe.
4. Equip tremie pump or slickline with suitable power hoist to facilitate vertical movement during concrete placement.
5. Air-lifts or pumps shall be available to remove unsuitable material which accumulates in low areas during placement.
6. Depending upon method selected for sealing tremie or slickline at beginning of the placement, adequate supply of end closure devices or plugs shall be available.

C. Placing:
1. Ensure that concrete is delivered to point of placement without free-fall.
2. Place concrete in continuous manner from bottom to top. Place by method which minimizes washout.
3. Construction joint surfaces shall be jetted to remove mud, algae, laitance, and other unsuitable material prior to placing adjacent concrete.
4. Start placements using a dry pipe technique and end closure device shall be filled with concrete before being raised off bottom. Discharge pipe shall then be raised maximum of 6 inches to initiate flow.
5. Do not lift discharge pipe further until a mound is established around the discharge mouth. Initial lifting of discharge pipe shall be done slowly to minimize disturbance of material surrounding pipe mouth.
6. Placements started using a plug shall be lifted 6 to 18 inches to allow water to escape. Concrete shall be added slowly to force the plug downward. Plugs shall

be removed, or made of a material approved by COR not to cause a defect in the concrete if not removed.

7. Furnish uninterrupted concrete supply to discharge pipe at beginning of placement until a mound sufficient to seal tremie pipe or slickline has been established.

8. Once established, maintain embedment of tremie pipe or slickline in fresh concrete at least 5 feet. Exact embedment depths shall depend upon placement rates and setting time of concrete.

   a. Control vertical movement of tremie pipe or slickline to prevent loss of seal.

   b. If loss of seal occurs, placement shall be halted immediately.

   c. Remove pipe, replace end closure device, and restart flow in presence of the COR.

      1) To prevent washout of already placed concrete, a plug shall not be allowed to restart after loss of seal.

9. Clear blockages in discharge lines to prevent loss of seal.

10. As temporary casing is withdrawn, maintain minimum head of 5 feet of concrete above bottom of casing.]

3.06 FINISHING

A. Notify COR before finishing concrete.

B. Finish concrete in presence of Government inspector unless inspection is waived in each specific case.

C. [103][Finishing {for the placements specified below} shall be performed under direct supervision of Craftsman certified as ACI Concrete Flatwork Finisher.

1. A minimum of one certified ACI Concrete Flatwork Finisher is required at each {specified} finishing operation.

2. {Placements requiring certified ACI Concrete Flatwork Finisher:}

---

[103] Include only when determination is made that certified ACI Concrete Flatwork Finishers are required for job. List structures when some, but not all, of the concrete placements require supervision by certified finisher. When all concrete placements require supervision by certified finisher, delete the list and "for the structures specified below", and "specified" in subparagraphs 1 and 2. Examples of concrete placements that could justify requiring a certified ACI Concrete Flatwork Finisher include low surface tolerances, surfaces that would have supercritical slow, and silica fume concrete.

Note: ACI Concrete Flatwork Finisher certification requires passing a written test plus successfully completing a performance examination and possessing actual on-the-job finishing experience (performance test plus 1,500 hours experience), or possessing a higher level of actual on-the-job experience (4500 hours experience). ACI also has certification for a Concrete Flatwork Technician. This certification has less rigorous qualification requirements and is not recommended.

a. {list placements}]

D. [104][Finish surfaces as specified in Table 03 30 00F – Formed Surfaces and Table 03 30 00G – Unformed Surfaces.]

E. Where finishes are not specified or shown on drawings for a particular surface, finish concrete as specified for similar work.

F. Formed surfaces:

1. Finish class is designated by symbols [105][F1, F2, F3, and F4].

2. Finish F1:

a. Applies to formed surfaces to be covered by fill material, grout, or concrete, and construction joint surfaces as specified in Table 03 30 00F – Formed Surfaces.

b. Protect form tie rod ends on surfaces in contact with fill material from moisture where they will be below water table or waterline.

1) Recess tie rod ends and fill recess with dry pack or other material approved by COR.

c. Cut off flush with formed surface form tie rod ends on surfaces in contact with concrete or fill material and above maximum water table or waterline elevation.

3. Finish F2:

a. Applies to exposed formed surfaces not permanently concealed by fill material, grout, or concrete, and not required to receive finish F3 or F4, and to contraction joint surfaces and expansion joint surfaces as specified in Table 03 30 00F – Formed Surfaces.

1) Recess tie rod ends and fill recess with dry pack or other material approved by COR.

4. Finish F3:

a. Applies to formed surfaces with special appearance requirements, such as surfaces exposed to view, and not required to receive finish F4, as specified in Table 03 30 00F - Formed Surfaces.

b. After required patching and correction of imperfections has been completed, sack rub surface as follows:

1) Thoroughly wet surface and sack rub while surface is still damp.

---

104 Verify table numbers. When table numbers change, edit table numbers in following paragraphs.

105 Select required formed finish class symbols and include following required paragraphs.

2) Use mortar consisting of 1 part cement; 2 parts, by volume, of sand passing No. 16 screen; and enough water so that mortar has consistency of thick cream. Blend standard cement with white cement as necessary to obtain color which will match surrounding concrete surface.

3) Thoroughly rub mortar over area with clean burlap or sponge rubber float to fill pits, bugholes, and other defects.

4) While mortar in pits is still plastic, rub surface with dry mix of above proportions and material to remove excess plastic material and place enough dry material in pits to stiffen and solidify mortar so that filling will be flush with surface. Remove material remaining on surface except material within pits.

5) Continue curing surface as specified.

5. Finish F4:

a. Applies to formed surfaces with accurate alignment and evenness of surface requirements to eliminate destructive effects of water as specified in Table 03 30 00F – Formed Surfaces.]

G. Unformed surfaces:

1. Do not use dry portland cement or additional water during finishing.

2. Do not use "jitterbugs" or other tools to force coarse aggregate away from surface.

3. Finish class is designated by symbols U1, [106][U2, U3, or broom finish.]

4. Finish U1 (Screeded Finish):

a. Applies to unformed surfaces to be covered by fill material, grout, or concrete as specified in Table 03 30 00G - Unformed Surfaces.

b. Use as first stage of finish U2 and U3.

c. After concrete is placed and consolidated, strike off and level concrete to produce even uniform surface.

5. Finish U2 (Floated Finish):

a. Applies to unformed surfaces not permanently concealed by fill material, grout, or concrete, and not required to receive finish U3, as specified in Table 03 30 00G – Unformed Surfaces.

b. Begin floating as soon as screeded surface has sufficiently stiffened and bleed water sheen has disappeared.

[106] Select required unformed finishes and include required paragraphs. When U2 or U3 finishes are specified, include U1 paragraphs even if there is no U1 finish in table (first stage of U2 and U3). When U3 finish is specified, include U2 paragraphs even if there is no U2 finish in table (second stage of U3). Delete last subparagraph (e) of U2 finish when there is no U3 finish.

c. Use hand- or power-driven equipment.

d. Finish surface with minimum floating necessary to produce surface that is free of screed marks and is uniform in texture.

e. [107][Use as second stage of finish U3. Floating shall bring small amount of mortar without excess water to surface, so as to permit effective troweling.}

6. Finish U3 (troweled finish):

a. Applies to unformed surfaces where appearance and porosity is considered by Government to be of special importance as specified in Table 03 30 00G – Unformed Surfaces.

b. Begin steel troweling after bleed water has disappeared and floated surface has sufficiently hardened to prevent excess of fine material from being drawn to surface.

c. Trowel with firm pressure to flatten sandy texture of floated surface.

d. Trowel to a dense uniform surface free from blemishes and trowel marks. Do not excessively trowel surface.]

7. Broomed finish:

a. Apply broom finish immediately after concrete receives U2 finish.

b. Edge transverse joints before brooming.

c. Produce a scored surface by brooming with fiber-bristle brush in direction transverse to that of traffic with adjacent strokes slightly overlapping.

d. Finished surface shall have uniform appearance and shall be free of abrupt corrugation exceeding 1/8-inch in depth.

e. Brooming shall eliminate flat surface left by the surface face of the edger.

8. Slope interior surfaces for drainage where shown on drawings or as directed by COR. Slope surfaces exposed to weather for drainage as directed by COR.

9. Slope narrow surfaces, such as tops of walls and curbs, approximately 3/8-inch per foot of width, unless use of other slopes or level surface is indicated on drawings or is directed by the COR.

10. Slope broader surfaces; such as walks, platform, and decks; approximately 1/4-inch per foot unless use of other slopes or level surfaces is indicated on drawings or is directed by the COR

3.07 JOINTS AND EDGES

A. Construction joints (CJ):

[107] Delete when U3 finish not included.

1. Construction joints are joints which are purposely placed in concrete to facilitate construction, reduce initial shrinkage stresses and cracks, allow time for installation of embedded metalwork, or allow for subsequent placing of other concrete.
2. Bond is required at construction joints regardless of whether or not reinforcement is continuous across joint.
3. Locate construction joints where shown on drawings. Relocation, addition, or elimination of construction joints will be subject to approval by the COR. .
4. Clean, roughen, and surface dry surfaces of construction joints to be covered with fresh concrete. See Preparation article.
5. Do not use a mortar layer on construction joints.

B. [108][Control joints (Ct.J):

1. Control joints are joints placed in concrete to provide for control of initial shrinkage stresses and cracks of monolithic units.
2. Construct control joints so no bond exists between concrete surfaces forming the joint.
   a. Construct control joints by placing concrete on one side of joint and allowing it to set before concrete is placed on other side of joint.
   b. Coat surface of concrete first placed at control joint with curing compound that prevents bond before placing concrete on other side of joint.
3. Reinforcement is continuous across tooled or saw cut control joints

C. [109][Partial Contraction Joints, (Partial Cr. J):

1. Construct partial contraction joints so no bond exists between concrete surfaces forming the joint.
   a. Construct partial contraction joints by placing concrete on one side of joint and allowing it to set before concrete is placed on other side of joint.
   b. Coat surface of concrete first placed at partial contraction joint with curing compound that prevents bond before placing concrete on other side of joint.
2. At partial contraction joints, discontinue every other reinforcement bar perpendicular to the joint; i.e. 1/2 of perpendicular reinforcement shall cross the joint. End discontinued bars 2 inches from face of joint.]

---

[108] Include when control joints are required and the slab thickness will not allow for saw cut joints to be installed per ACI 302.1R. Control joints are joints placed in concrete to provide for control of initial shrinkage stresses and cracks of monolithic units.

[109] Include only when partial contraction joints are required.

D. [110][Contraction joints (Cr.J):

1. Contraction joints are joints placed in concrete to provide for volumetric shrinkage of a monolithic unit or movement between monolithic units.

2. Construct contraction joints so no bond exists between concrete surfaces forming the joint.

   a. Construct contraction joints by placing concrete on one side of joint and allowing it to set before concrete is placed on other side of joint.

   b. Coat surface of concrete first placed at contraction joint with curing compound that prevents bond before placing concrete on other side of joint.

3. Except as provided for dowels, reinforcement is not continuous across a contraction joint.]

E. [111][{Expansion joints (EJ):

1. Cut sponge rubber joint filler to size and shape of joint surface to receive filler.

2. Adhere filler to concrete in accordance with adhesive manufacturer's recommendations.

3. Butt sections of filler with tight-fitting butt joints to prevent mortar from seeping through joint.}

F. {Expansion joints (EJ):

1. Form joint in concrete.

2. Fill joint with bituminous joint filler.

3. Butt sections of filler with tight-fitting butt joints.}]

G. [112][Saw cut joints:

1. Saw cut joints shall be completed within 24 hours following concrete placement.

2. Joints shall have straight, sharp edges and cut to minimum width possible with type of saw used.

3. Minimum depth of saw cuts shall be 1/4 of depth of concrete unless otherwise indicated on the drawings.]

4. Early-entry, dry-cut saw cutting is not permitted.

---

110 Include when contraction joints required.

111 Include only when expansion joints required. Include applicable paragraphs. Generally only one set of paragraphs is necessary. First paragraphs are for expansion joints with sponge rubber joint filler. Second set of paragraphs are for expansion joints with bituminous joint filler.

112 Include only when saw cut joints are required as shown on drawings. Saw cut joints typically only used for flatwork where there will not be interference from reinforcing steel.

H. Edges:

1. Permanently exposed concrete, except slabs and top edges of curbs: Chamfer edges with 45 degree bevel 3/4-inch by 3/4-inch; unless otherwise shown on drawings.

2. Exposed edges of slabs and top edges of curbs: Tool to radius of 1/4 inch.

I. Preformed joints consisting of plastic or metal strips not allowed.

3.08 STRUCTURAL DEVIATIONS AND SURFACE TOLERANCES

A. Structural deviations are defined as allowable variations from specified lines, grades, and dimensions.

B. Surface tolerances are defined as maximum allowable magnitude of surface irregularities.

C. Specified structural deviations and surface tolerances are consistent with modern construction practice and governed by effects that permissible variations may have upon a structure. COR reserves the right to diminish specified structural deviations and surface tolerances where such variations impair structural action, operational function, or architectural appearance of a structure or portion of structure.

D. Construct concrete within stated variations even though more than one may be specified.

1. Specified variation for one element of a structure will not apply when it will permit another element of same structure to exceed its allowable variation.

2. Where variations are not specified or shown on drawings for a particular structure, variations shall be those specified for similar work. As an exception to clause at FAR 52.236-21 “Specifications and Drawings for Construction,” specific tolerances shown on drawings in connection with dimension shall govern.

E. Structural deviations:

1. Check variations from specified lines, grades, and dimensions in hardened concrete to determine that structures are within tolerances specified in Table 03 30 00C - Deviations from Specified Lines, Grades, and Dimensions.

2. Variation is distance between actual position of structure or element of structure and specified position in plan for structure or particular element.

a. Plus or minus variations, shown as (∀), indicate a permitted actual position up or down and in or out from specified position in plan.

b. Variations not designated as (+) or (-) indicate maximum deviation permitted between designated successive points on completed element of construction.

3. Specified position in plan is defined as lines, grades, and dimensions described in these specifications, shown on drawings, or prescribed by COR.

[113][Insert table - see guide Section 03 30 00 - Concrete Deviations]

F. Surface irregularities:

1. Bulges, depressions, and offsets are defined as surface irregularities or roughness.
2. Surface irregularities are classified as "abrupt" or "gradual" and allowable tolerances are specified in Table 03 30 00D - Surface Tolerances.
   a. A surface tolerance is designated by a capital "T" followed by a number 1 through 5.
   b. Surface tolerance designations are separate from surface finishes and structural deviations.
3. Abrupt surface irregularities:
   a. Abrupt surface irregularities are defined as offsets such as those caused by misplaced or loose forms in which maximum dimension of irregularity perpendicular to surface is greater than maximum dimension of irregularity in plane of surface.
   b. Abrupt surface irregularities include isolated surface irregularities which exceed specified gradual irregularities.
4. Gradual surface irregularities:
   a. Gradual surface irregularities are defined as bulges and depressions resulting in gradual changes on surface.
   b. Gradual surface irregularities are further defined as isolated undulations on surface. Maximum dimension of undulation perpendicular to surface is small relative to maximum dimension of undulation in plane of surface.
5. Check magnitude of surface irregularities of formwork and finished surfaces to ensure that surfaces are within specified tolerances.

G. Surface tolerances:

Table 03 30 00D - Surface Tolerances

Concrete surface	Maximum allowable surface irregularity tolerance	
	Abrupt	Gradual
T1	1 inch	1/4 inch/inch
T2	1/2 inch	1/8 inch/inch
T3	1/4 inch	1/16 inch/inch

[113] Insert table for "Deviation from Specified Lines, Grades, and Dimensions". See file 03 30 00 - Concrete Deviations.docx. Edit table to remove structure types that do not apply. Change table designation (letter) as needed.

Table 03 30 00D - Surface Tolerances

Concrete surface	Maximum allowable surface irregularity tolerance	
	Abrupt	Gradual
T4	1/8 inch	1/32 inch/inch
T5	1/32 inch	1/120 inch/inch

H. Repair of hardened concrete not within specified tolerances:

1. Repair hardened concrete which is not within specified tolerances to bring it within those tolerances.

2. Perform repair after consultation with Government inspector regarding method of repair. Notify COR as to time when repair will be performed.

3. Repair concrete which will be exposed to view in manner which will result in concrete surface with uniform appearance.

a. When grinding surfaces exposed to view, limit depth of grinding such that no aggregate particles are exposed more than 1/16 inch in cross section at finished surface.

b. Where grinding has caused or will cause exposure of aggregate particles greater than 1/16 inch in cross section at finished surface, repair concrete by excavating and replacing concrete.

I. Field verification of surface tolerances:

1. Determine compliance of surface with specified surface tolerances.

2. Evaluate surface roughness.

a. Measure roughness height or depth and check for compliance with values specified in Table 03 30 00D - Surface Tolerances and Table 03 30 00C - Deviations from Specified Lines, Grades, and Dimensions.

b. When measured height or depth of roughness is less than value in abrupt tolerance specification and height or depth of roughness does not cause structure to exceed applicable value specified in Table 03 30 00C - Deviations from Specified Lines, Grades, and Dimensions, surface roughness is acceptable.

c. When roughness height or depth exceeds abrupt tolerance specification, determine roughness slope for comparison to gradual tolerance specification.

1) Measure roughness length and determine roughness slope by dividing roughness height or depth by roughness length (see Figure 1).

2) When roughness slope is greater than slope specified by gradual tolerance specification, surface roughness is unacceptable.

3) When roughness slope is less than gradual slope specified and gradual roughness does not cause structure to exceed allowable structural deviations, surface roughness is acceptable.

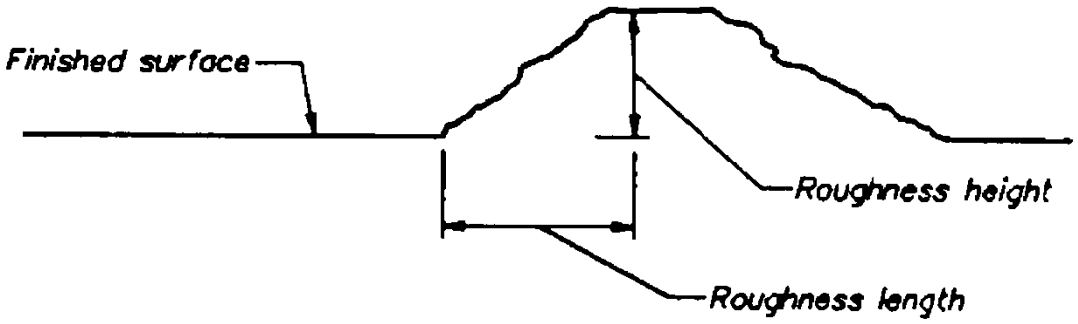

$$\text{Roughness slope ratio} = \frac{\text{Roughness height}}{\text{Roughness length}}$$

CASE 1 = Offset on the Surface

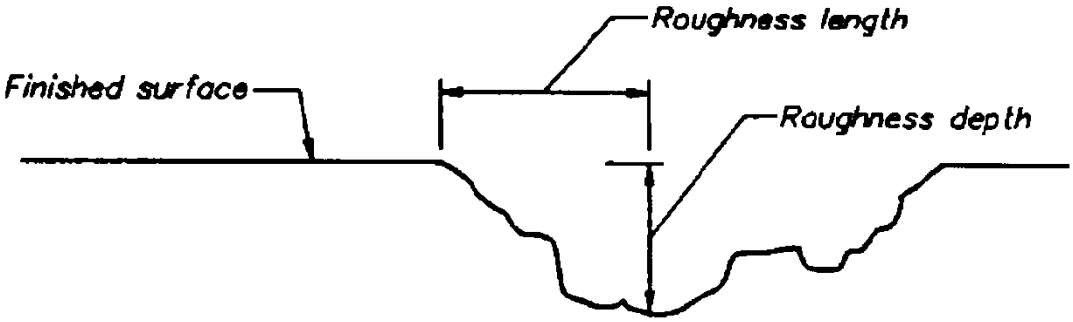

$$\text{Roughness slope ratio} = \frac{\text{Roughness depth}}{\text{Roughness length}}$$

CASE 2 = Offset into the Surface

FIGURE 1

J. Measuring surface roughness:

1. Examples below illustrate how to make necessary surface measurements for typical roughness.

2. Case 1 - Roughness Protruding above Surface:

   a. Measure roughness protruding above surface with straightedge that is at least 20 times longer than roughness height being measured.

   b. Position straightedge with one end resting on top of roughness, as shown in Figure 2 (case 1).

   c. Determine roughness height by measuring maximum gap that occurs normal to straight edge.

   d. Note position on the straightedge from which normal distance is measured.

   e. To determine roughness length, measure distance along straightedge from point where the height was measured to point of contact between straightedge and top of roughness.

   f. Roughness slope is defined as ratio of roughness height to roughness length.

   g. As roughness is seldom symmetric, moving position of straightedge about roughness may be necessary to locate point where maximum height and slope exists.

3. Case 2 - Roughness Extending below the Surface:

   a. A roughness occurring as an indentation to surface is measured by placing straightedge across indentation, as shown in Figure 2 (case 2).

   b. Measure maximum gap between straightedge and surface and note location of measurement on straightedge.

   c. From point of depth measurement, measure along straightedge in both directions to point of contact with surface.

   d. Use shortest length measured as roughness length.

   e. Divide roughness depth by roughness length to determine roughness slope.

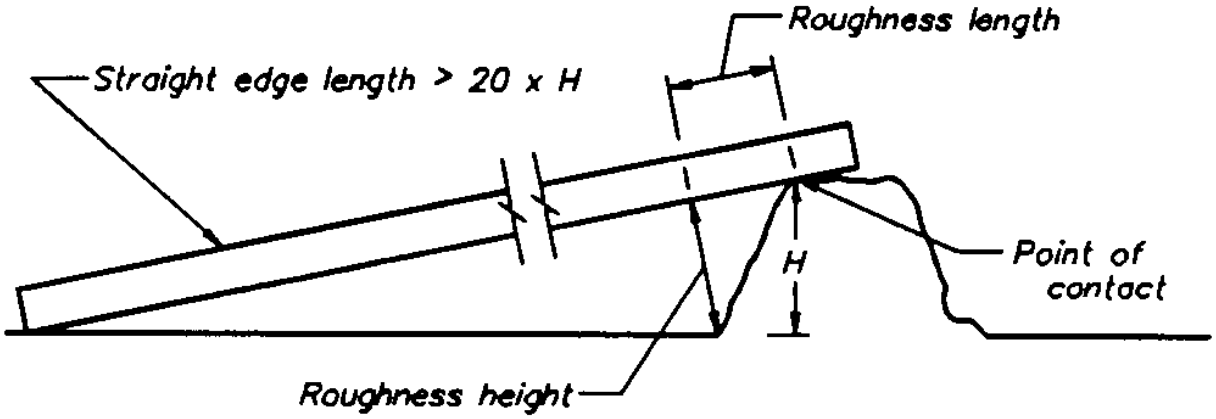

CASE 1

$$\text{Roughness slope} = \frac{\text{Roughness depth}}{\text{The shortest distance L1 or L2}}$$

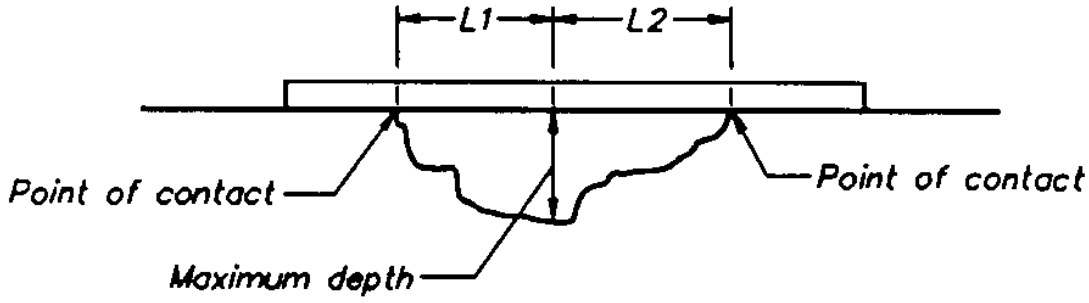

CASE 2

FIGURE 2

K. Prevention of repeated failure to meet tolerances:

1. When concrete placements result in hardened concrete which does not meet specified tolerances, submit to COR an outline of preventive actions such as modifications to forms, modified procedure for setting screeds, and different finishing techniques to be implemented to avoid repeated failures. Submit when requested by COR.

2. Government reserves the right to delay concrete placements until preventive actions which have been approved by COR are implemented.

3.09 CURING

A. Water curing:

1. Keep concrete surface wet for 14 days, minimum, from time concrete has attained sufficient set to prevent detrimental effects to surface.

2. Cure methods:

a. Water-saturated material.

b. System of perforated pipes, mechanical sprinklers, or porous hose.

c. Other methods which will keep surfaces wet.

d. Subject to approval by COR.

3. [114][When water curing is anticipated for RSMC, include water curing methods for RSMC in RSMC Temperature Control Plan. Provisions may be necessary to prevent rapid cooling of concrete surfaces.]

B. Curing with curing compound:

1. Apply to concrete surface to provide water-retaining film. Reapply as necessary to maintain continuous, water-retaining film on surface for 28 days.

2. Thoroughly mix compound and spray apply in one coat to provide continuous, uniform film over surface.

3. Do not exceed coverage rate recommended by curing compound manufacturer. Decrease coverage rate on rough surfaces as necessary to obtain required continuous film.

4. Ensure ample coverage on edges, corners, and rough surfaces.

5. Use spray equipment recommended by curing compound manufacturer.

C. Sheet material curing:

1. [115][Includes curing with {polyethylene film} {or white burlap-polyethylene sheet}.]

[114] Include only when RSMC specified.

2. Thoroughly moisten concrete surface by lightly spraying with water as soon as concrete has hardened sufficiently to prevent damage.
3. Completely cover concrete surface with sheet material to provide airtight, water-retaining film over entire surface.
4. Lap edges of sheet material to seal adjacent sheets.
5. Place tightly against concrete surface at extreme edge of curing area.
6. Secure sheet material to withstand wind and prevent circulation of air inside sheet material.
7. Keep surface covered for 14 days, minimum.

3.10 [116][CONTRACTOR FIELD QUALITY TESTING

A. [117][{Contractor} {Independent testing agency}] shall perform sampling, testing, and reporting as required in Table 03 30 00E - Field Testing.

1. [118][Independent testing agency shall meet requirements specified in Section 01 46 20 - Testing Agency Services.]
2. Personnel conducting plastic concrete field tests: Qualified as ACI Concrete Field Testing Technician, Grade 1; or equal.
3. Personnel conducting concrete specimen tests: Qualified as ACI Concrete Strength Testing Technician; or equal.

B. Perform tests at least as often as frequencies specified in Table 03 30 00E - Field Testing.

C. Notify COR immediately of test results showing failure of materials to meet specifications. Notify COR within 2 hours of test results showing materials meet specifications. Submit reports of test results as specified.

---

115 Revise for type(s) of sheet materials specified. Coordinate with Curing Materials article for materials specified. See footnotes for that article for discussion of appropriate sheet materials.

116 See footnote for Article "Batch Plant Quality Testing" (2.11) for discussion of Reclamation practice and recommendations for quality testing. Including Contractor Field Quality Testing is not necessary when the Government plans to perform full Quality Assurance testing, however

117 Select "Contractor" when Government will be performing Quality Assurance testing. Requiring the Contractor to hire an independent testing agency is usually not needed when the Government will perform full Quality Assurance testing.

Select "Independent testing agency" when Government plans to perform little or no Quality Assurance testing and plans to use independent testing agency test results for evaluating acceptability of work.

See previous footnote.

118 Include only when independent testing agency required to perform testing.

3.11 GOVERNMENT CONTRACT QUALITY ASSURANCE - FIELD

A. [119][The Government will perform, as a minimum, tests listed in Table 03 30 00E - Field Testing. This testing is in addition to the Contractors Quality Assurance/Quality Control (QA/QC) program and does not relieve the Contractor of performing adequate QA/QC testing. The list of tests is provided only to alert the Contractor to potential impacts to work scheduling.

B. Government testing frequency is at discretion of the COR. Greater frequency testing is normally performed at beginning of new work, new crew, or new equipment. Testing frequency listed in Table 03 30 00E - Field Testing is provided only as approximation of Government testing.]

C. [120][In addition to specified Contractor Quality Field Testing, the Government may also perform tests listed in Table 03 30 00E - Field Testing.]

3.12 FIELD TESTING

Table 03 30 00E- Field Testing

TESTS OF	TEST STANDARD	STANDARD TITLE	TESTING FREQUENCY
Fresh Concrete Properties - tests performed at site	ASTM C143	Slump of Hydraulic-Cement Concrete	1 set of tests per load for first two loads. When tested concrete meets specifications, 1 set of tests each day of placement for each mixture for first 50 or less cubic yards, and 1 set of tests for each additional 100 cubic yards of concrete. Minimum of 1 set of tests per hour during placements. When concrete does not meet specifications, test each load until 2 consecutive loads meet specifications, then resume testing frequency specified above.
	ASTM C231	Air Content of Freshly Mixed Concrete by the Pressure Method (alternative to ASTM C138 gravimetric method)	
	ASTM C1064	Temperature of Freshly Mixed Hydraulic-Cement Concrete	

[119] Include paragraphs A, B when the Government will be performing full Quality Assurance testing of concrete. See footnote for Contractor Quality Testing article (2.10) for discussion of Reclamation practice. As noted in paragraph A, this information is provided to the Contractor for information as to potential impacts for scheduling his activities

[120] Include paragraph C when the Government will perform little or no quality testing. The Contractor shall retain independent testing agency to perform tests that the Government evaluate when determining acceptability of work. See footnote for Contractor Quality Testing article (2.10) for discussion of Reclamation practice.

Table 03 30 00E- Field Testing

TESTS OF	TEST STANDARD	STANDARD TITLE	TESTING FREQUENCY
	ASTM C138	Density (Unit Weight), Yield, and Air Content (Gravimetric) of Concrete	
Compressive Strength,	ASTM C31 ASTM C39	Making and Curing Concrete Test Specimens in the Field Compressive Strength of Cylindrical Concrete Specimens	1 set of samples (6-inch by 12 inch for each day of placement for each mixture for the first 50 or less cubic yards, and 1 set of samples for each additional 100 cubic yards of concrete. A minimum of 5 samples for strength testing shall be made each time strength samples are collected. 2 additional field cured test cylinders during placement in adverse (hot or cold) weather. Cure these samples on jobsite under same conditions as concrete the cylinders represent for minimum of 7 days, then transfer to testing laboratory until testing at strength design days. Test 2 cylinders each at 7 days age and 2 cylinders at strength design age. Maintain last cylinder for testing in event that the strength design age test results fall below the required strength.
Concrete Cores	ASTM C42	Obtaining and Testing Drilled Cores and Sawed Beams of Concrete	At discretion of the Government when cylinder strengths fail to meet minimum requirements. The Contractor shall obtain core specimens in accordance with ASTM C42 at locations directed by COR, at no additional cost to the Government. The Contractor shall repair the core holes in accordance with USBR M-47 as directed by COR

A. Acceptance criteria:

1. Cylinder compressive strength:

a. In accordance with ASTM C94, except as follows:

1) 90 Percent of test cylinders exceed specified compressive strength at design age.

2) Average compressive strength of six consecutive test cylinders exceeds specified compressive strength at design age.

3) No individual strength test falls below specified compressive strength by more than 500 lb/in^2.

2. Drilled concrete cores:

a. [121][{Concrete in placement represented by core tests will be considered structurally adequate when average compressive strength of three cores is equal to at least 85 percent of specified compressive strength and no single core has a compressive strength of less than 75 percent of specified compressive strength.

b. Concrete in placement represented by core tests will be considered adequate for durability when average compressive strength of three cores is equal to at least 100 percent of specified compressive strength at design age.

3.13 PROTECTION

A. Protect concrete from damage until final acceptance by Government.

1. Do not load, remove forms or shoring, or backfill against concrete until concrete has gained sufficient strength to safely support its weight and imposed loads.

2. Protect fresh concrete against erosion from rain, hail, sleet, or snow; contamination from foreign materials; and damage from foot traffic until the concrete has hardened.

3. Protect concrete from heavy foot traffic and other construction activities by covering with plywood or other suitable material. Remove and dispose of temporary covering when no longer required.

B. [122][Protect concrete when freezing temperatures are imminent:

1. Maintain concrete at a temperature of 50 degrees F (10 degrees C) or greater for 72 hours, minimum, after placement. Vent heater and prevent concrete from drying where artificial heat is employed.

2. Protect concrete from freezing during water curing. After discontinuance of water curing, maintain at a temperature of 50 degrees F (10 degrees C) or greater for next 72 hours.

3. Discontinue protection against cold weather such that the drop in temperature of the concrete will be gradual and will not exceed 5 degrees F per hour and 40

---

121 Select subparagraph a or b. If a job has concrete placements where the different criteria would apply, need to list the placements that the different criteria would apply.

Paragraph b is appropriate for concrete exposure classes requiring 4500 psi or above concrete in accordance with ACI 318.

122 Include when there could be the possibility of placing concrete in freezing weather.

degrees F in 24 hours [123][for thin sections and 5 degrees F per hour and 20 degrees F in 24 hours for massive sections greater than 36 inches].

3.14 REPAIR

A. Repair concrete in accordance with USBR M-47.

B. Use repair or replacement method directed by COR.

3.15 FINISH, SURFACE TOLERANCES, AND CURING SCHEDULES

[124][*Insert tables*}

END OF SECTION

[123] Include when there will be concrete placement over 36 inches in all directions.

[124] Insert schedule tables for formed and unformed surface finish, tolerance, and curing method. See guide spec 03 30 00 - Concrete Schedule.docx. Edit tables to delete surfaces that do not apply.

SECTION 03 37 10 **SHOTCRETE**
GUIDE SPECIFICATION DEPARTMENT OF THE INTERIOR – BUREAU OF RECLAMATION
REVISIONS Reference Standards Checked/Updated: 7/13/15 Content Revisions: Editorial/Format Revisions: Template: CSI_15a.dotx
NOTES
Please provide corrections or comments to address shown on home page of USBR Guide Specifications intranet site: intra.usbr.gov/guidespecs

SECTION 03 37 10
SHOTCRETE

PART 1 GENERAL

1.01 MEASUREMENT AND PAYMENT

A. [1][Shotcrete:

1. Measurement: Volume discharged at nozzle.
2. Payment: Cubic yard unit price offered in the schedule. Does not include cementitious materials.

B. Cementitious materials in shotcrete:

1. Measurement: Weight based on batch weight.
2. Payment: Tons unit price offered in the schedule.]

C. [2][Cost: Include cost of shotcrete in linear foot price offered in the schedule for tunnel lining.]

1.02 REFERENCE STANDARDS

A. American Concrete Institute

1.	ACI 506R-05	Guide to Shotcrete

B. ASTM International (ASTM)

1.	ASTM C 33/C 33M-13	Concrete Aggregates
2.	ASTM C 42/C 42M-13	Obtaining and Testing Drilled Concrete Cores and Sawed Beams of Concrete
3.	ASTM C 94/C 94M-15	Ready-Mixed Concrete
4.	[3][ASTM C 150-15	Portland Cement]
5.	ASTM C 171-07	Sheet Materials for Curing Concrete
6.	ASTM C 309-11	Liquid Membrane-Forming Compounds for Curing Concrete
7.	ASTM C 1140/C 1140M-11	Preparing and Testing Specimens from Shotcrete Test Panels

---

[1] Include when shotcrete paid by volume. Revise if cementitious material to be included in payment for volume price offered for shotcrete.
[2] Include when tunnel lining paid by linear foot.
[3] Delete when there is a Section 03 30 00

8.	ASTM C 1141-08	Admixtures for Shotcrete
9.	ASTM C 1436-13	Materials for Shotcrete
10.	ASTM C 1583/ C 1583M-13	Tensile Strength of Concrete Surfaces and the Bond Strength or Tensile Strength of Concrete Repair and Overlay Materials by Direct Tension
11.	[4][ASTM C 618-12a	Coal Fly Ash and Raw or Calcined Natural Pozzolan for Use as a Mineral Admixture in Concrete]
12.	ASTM C 1602/C 1602M-12	Mixing Water Used in the Production of Hydraulic Cement Concrete

C. Bureau of Reclamation (USBR)

1.	USBR M-47	Standard Specifications for Repair of Concrete, August 2015 (Part 2, Appendix 1 of "Guide to Concrete Repair" available at http://www.usbr.gov/ (insert URL _____)

D. NSF International

1.	NSF 61-2013	Drinking Water System Components-Health Effects

1.03 SUBMITTALS

A. Submit the following in accordance with Section 01 33 00 - Submittals.

B. RSN 03 37 10-1, Shotcrete Mix Design:

1. Material proportions.
2. Manufacturer's certification and test reports for each cementitious material, aggregate source, and admixture
3. Prepare a test panel for each proposed mix, shooting orientation, and nozzleman prior to construction.
   a. Prepare and test panels in accordance with ASTM C1140.
      1) Minimum panel size: 18-inches by 18-inches by 4-inches thick.
      2) Provide reinforcement of the same size and grade specified.
      3) Extract cores in accordance with ASTM C42.
      4) Test three cores each at [5][8 hours, 24 hours, 7 and 28 days] for compressive strength.

[4] Delete when there is a Section 03 30 00

5) Provide three cores containing reinforcing steel for bar encapsulation verification.

C. RSN 03 37 10-2, Specific Operating Procedure:

1. Include engineering controls, protective clothing, eye protection, respiratory protection and air sampling as necessary to check control program effectiveness.

2. List of personnel and certification of Nozzlemen.

D. RSN 03 37 10-3,Test Panel Results.

1.04 DEFINITIONS

A. Dry-mix process:

1. Mix solid materials to a uniform color with no sand streaks, feed materials into a mechanical feeder or gun, carry materials by compressed air through a hose to a special nozzle, introduce water and mix with other ingredients at the nozzle, jet mixture from nozzle at high velocity onto surface.

2. Add liquid accelerator to mixture at nozzle.

3. Add powder accelerator to mixture as mixture enters mechanical feeder or gun.

B. Wet-mix process:

1. Mix ingredients, feed mixture into delivery equipment, deliver mixture by positive displacement or compressed air to nozzle, and then jet mixture from the nozzle at high velocity onto surface.

2. Add accelerator to mixture at nozzle.

1.05 QUALIFICATION

A. Certified nozzleman, ACI Shotcrete Nozzleman Certification.

PART 2 PRODUCTS

2.01 SHOTCRETE MATERIALS

A. In accordance with ASTM C 1436, except as detailed below.

2.02 CEMENTITIOUS MATERIALS

A. [6][In accordance with Section 03 30 00 – Cast-In- Place Concrete.]

---

[6] Delete if there is no Section 03 30 00

B. [7][Cementitious Materials Options:

1. Specified portland cement only.
2. Specified portland cement plus specified pozzolan.

C. Portland Cement:

1. ASTM C 150, Type [8][____].
2. Meet equivalent alkalies requirements of ASTM C 150 - Table 2.
3. Meet false-set requirements of ASTM C 150 - Table 4.

D. Pozzolan:

1. ASTM C 618, Class F.
2. Sulfur trioxide for Class F, maximum: 5.0 percent.
3. Loss on ignition, maximum: 6.0 percent.
4. Use pozzolan tested for effectiveness in controlling alkali-silica reaction under optional physical requirements in Table 2 of ASTM C 618. Use low-alkali cement for test.
5. Do not decrease sulfate resistance of concrete by use of pozzolan.
   a. Demonstrate pozzolan shall have an "R" factor less than 2.5.
      1) R = (C-5)/F
      2) C: Calcium oxide content of pozzolan in percent determined in accordance with ASTM C 114.
      3) F: Ferric oxide content of pozzolan in percent determined in accordance with ASTM C 114.]

E. [9][Low-alkali limitation for portland cement and mortar expansion limit for pozzolan may be waived by Government when concrete aggregate source has previously been tested by Bureau of Reclamation and aggregate source does not contain potentially deleterious amounts of particles which may react with alkalis in cementitious materials as evidenced by petrographic examination or mortar bar tests, or both.]

2.03 WATER

A. ASTM C 1602, including optional requirements of Table 2.

---

[7] Delete if there is no Section 03 30 00

[8] Specify Type (I, II, III, or V) if there is no Section 03 30 00.

[9] Delete if aggregate sources have not been tested.

2.04 AGGREGATE MATERIALS

A. Fine aggregate: ASTM C 33.

B. Coarse Aggregate: ACI 506R, Grading No.[10][1 or 2] from Table 1.1.

2.05 ADMIXTURES

A. Air-Entraining Admixture:

1. ASTM C1141 Type II, Grade 8.

B. Chemical Admixtures:

1. Allowable Chemical Admixtures:
   a. ASTM C1141 Type I or II, Grade 2.
   b. ASTM C 1141 Type II, Grade 7.
   c. [11][ASTM C 1141 Type I or II, Grade 1, provided they do not contain chlorides.]
2. Admixtures: Compatible with each other.
3. Do not use chemical admixtures which introduce more than 1/10 of 1 percent chloride, by weight of cementitious materials.
4. Class B accelerator may be used for dry-mix process
5. Do not use Class B accelerator in wet-mix process
6. Water-reducing, set-controlling admixture may be used. Meets ASTM C 494.

2.06 CURING MATERIALS

A. Water: ASTM C 1602, including optional requirements of Table 2.

B. Curing Compound: ASTM C 309.

C. Polyethylene Film: ASTM C 171, white opaque.

2.07 BATCHING AND MIXING

A. Mix:

1. [12][Compressive strength:600 psi at 8 hours age and 4,000 psi at 28 days based on 3- by 3-inch cores.]

---

[10] Specify aggregate grading necessary for the project.

[11] Include for cold weather use only.

[12] Edit to specify specific project requirements

2. Consistency:

   a. Dry mix process: Introduce water at nozzle and adjust so in-place shotcrete is compacted and shows no sags or excessive rebound.

   b. Wet-mix process: Maximum 3-inch slump.

B. Batching

1. Dry-mix process:

   a. Obtain uniform proportions of water, cementitious materials, sand, coarse aggregate, and admixture. Use equipment capable of controlling material delivery so inaccuracies do not exceed:

      1) 1 percent for water.

      2) 1-1/2 percent for cementitious materials.

      3) 2 percent for sand and coarse aggregate.

      4) 3 percent for admixture.

   b. Recalibrate auger feed as necessary to keep them within prescribed batching accuracy.

   c. Percent surface moisture in sand, by weight, ASTM C 128 and ASTM C 566: 3 to 6 percent.

   d. Waste shotcrete batches when cementitious materials have been in contact with wet aggregate or other moisture for more than 2 hours.

2. Wet-mix process: Manufacture in accordance with ASTM C 94.

2.08 MIXING

A. Dry-mix process:

1. Uniformly add cementitious materials, sand, coarse aggregate, and admixture and thoroughly mix before feeding into delivery equipment. Add liquid accelerator if used at nozzle.

2. Machine mix dry ingredients.

3. If mixers are used to mix dry ingredients without full amount of mix water added, discharge batch without segregation.

4. Test mixers for uniformity of coarse aggregate content from front to back of mixer.

5. Maximum permissible difference in percentage of coarse aggregate by weight sample shall not exceed 6 percent within a batch.

6. Equip discharge nozzle with a manually operated water injection system of sufficient pressure to provide an even distribution of water into dry shotcrete mixture at nozzle.

B. Wet-mix process: Manufacture in accordance with ASTM C 94.

PART 3 EXECUTION

3.01 PLACING

A. Use an air compressor of ample capacity to maintain a supply of clean, dry air adequate for maintaining a uniform nozzle velocity.

B. Place shotcrete by pneumatic pressure from discharge nozzle held about 2 to 5 feet from the surface in a stream as nearly normal as possible to surface being covered.

C. Rapidly gyrate nozzle while placing.

D. Place in layers having a thickness that assure complete adherence of shotcrete to the surface. Assure adequate bond is achieved between successive layers.

E. Remove and replace any shotcrete which sloughs or separates as determined by COR.

F. Prevent formation of sand pockets in shotcrete. If sand pockets form, remove immediately and replace with suitable shotcrete at Contractor's expense.

G. Do not use rebound as shotcrete aggregate. Remove and dispose of rebound accumulations.

H. Placing shotcrete temperature: Between 50 and 90 degrees F.

I. Do not place on frozen surfaces.

J. Keep applied shotcrete at temperature greater than 50 degrees for a minimum of 3 days immediately following application.

K. If using accelerating hardener, do not exceed shotcrete temperature of 80 degrees F.

3.02 CURING

A. Water Curing:

1. Keep concrete surface wet for 14 days, minimum, from time concrete has attained sufficient set to prevent detrimental effects to surface at a temperature above 40 degrees F.
2. Cure methods:
   a. Water-saturated material.
   b. System of perforated pipes, mechanical sprinklers, or porous hose.
   c. Other methods which keep surfaces wet.

d. Subject to approval by COR

B. Curing with Curing Compound:

1. Apply to concrete surface to provide a water-retaining film. Reapply as necessary to maintain a continuous, water-retaining film on surface for 28 days.
2. Thoroughly mix compound and spray apply in one coat to provide a continuous, uniform film over surface.
3. Do not exceed coverage rate of 150 square feet per gallon. Decrease coverage rate on rough surfaces as necessary to obtain required continuous film.
4. Ensure ample coverage on edges, corners, and rough surfaces.
5. Spray equipment and equipment performance subject to approval by the COR. Repair or replace equipment when directed by the COR.
6. Use personnel qualified in using specified spray technique, as determined by the COR, to perform application

C. Polyethylene Film Curing:

1. Thoroughly moisten concrete surface by lightly spraying with water as soon as concrete has hardened sufficiently to prevent damage.
2. Completely cover concrete surface with polyethylene film to provide an airtight, water-retaining film over entire surface.
3. Lap edges of polyethylene sheets to seal adjacent sheets.
4. Place tightly against concrete surface at extreme edge of curing area.
5. Secure film to withstand wind and prevent circulation of air inside curing film.
6. Keep surface covered for 14 days, minimum.

3.03 GOVERNMENT QUALITY ASSURANCE

A. If selected shotcreting system fails to provide satisfactory in-place shotcrete as determined by the COR, Contractor shall change to another system of either of the two processes, provide a redemonstration of the nozzleman's proficiency, or provide a new certified nozzleman.

3.04 CONTRACTOR QUALITY CONTROL

A. Field test panels: Prepare three test panels during shotcreting operations at locations requested by the COR. Prepare one set of three test panels for every 5,000 sf of shotcrete or one set per day, whichever is greater.

1. Prepare and test panels in accordance with ASTM C 1140.
2. Minimum panel size: 18-inches by 18-inches by 4-inches thick.
3. Provide reinforcement of the same size and grade specified.

4. Extract cores in accordance with ASTM C 42.
5. Test three cores each at [13][8 hours, 24 hours, 7 and 28] days for compressive strength.
6. Provide three cores containing reinforcing steel to the COR for bar encapsulation verification.

B. For shotcrete bonded to concrete:

1. Measure bond strength according to ASTM C 1583 at locations directed by COR.
2. Minimum bond strength: 100 psi.

END OF SECTION

[13] Edit to specify specific project requirements.

SECTION 03 81 10
CONCRETE REMOVAL

GUIDE SPECIFICATION
DEPARTMENT OF THE INTERIOR – BUREAU OF RECLAMATION

REVISIONS

Reference Standards Checked/Updated: 5/11/15

Content Revisions:

5/11/15 Changed "schedule" to "Price Schedule".

12/22/14 Added hydrodemolition and formatted.

1/17/13 Added Note. Added lump sum payment option. Added subparagraph that actual compressive strength may be higher than design compressive strength. Corrected reference to Section 01 74 00.

4/7/09 Changed Section number.

Editorial/Format Revisions:

5/11/15 Changed template

4/7/09 Changed template.

3/18/08 Changed template and added blank page code at end.

Template: CSI_15a.dotx

NOTES

This Section covers selective, partial removal of existing concrete required for modification to an existing structure. Removal of an entire concrete structure should be addressed with a Section number of 03 04 XX or 02 41 XX. See discussion of Section numbers in Reclamation Master. Also, this Section does not cover requirements for removing deteriorated concrete for repair of concrete. This activity should be covered in a Section with a number of 03 01 XX.

Please provide corrections or comments to address shown on home page of USBR Guide Specifications intranet site: intra.usbr.gov/guidespecs

SECTION 03 81 10
CONCRETE REMOVAL

PART 1 GENERAL

1.01 MEASUREMENT AND PAYMENT

A. [1][Concrete Removal:

1. Payment: Lump sum price offered in the Price Schedule.]

B. [2][Core Drilling X-inch Holes in Existing Concrete:

1. Measurement: Length of holes drilled in existing concrete.
   a. Holes drilled in concrete placed under this contract will not be included in measurement.
2. Payment: Foot price offered in the Price Schedule.
   a. {Includes core drilling used to round corners after hydrodemolition}[3]]

C. [4][Saw Cutting Existing Concrete:

1. Measurement: Length of saw cuts made for removal as shown on the drawings or directed by the COR.
   a. Saw cuts made in concrete place under this contract will not be included in measurement.
2. Payment: Linear foot price offered in the Price Schedule.
   a. {Includes saw cutting to square edges after hydrodemolition}[5]]

D. [6][Saw Cutting Existing Concrete:

1. Measurement: Area of existing concrete saw cut for removal.

---

[1] Include when concrete removal will be paid by lump sum price.

[2] Include when core drilling of concrete required – for instance if rounded surfaces are required at corners.

[3] Delete if hydrodemolition is not proposed.

[4] Include when saw cutting will be paid for by the linear foot. Typical method of payment when full depth saw cutting is not required. Include similar language for edge grinding if that is permissible. Edge grinding is for special circumstances when shallow repairs are planned. The minimum depth for edge grinding is ¼ inch. Consult with CGSL staff if edge grinding is anticipated.

[5] Delete if hydrodemolition is not proposed.

[6] Include when saw cutting will be made by the area of concrete cut. Can be used when full depth concrete cuts are required. Include similar language for edge grinding if that is permissible. Edge grinding is for special circumstanced when shallow repairs are planned. The minimum depth for edge grinding is ¼ inch. Consult with CGSL staff if this is anticipated.

a. Saw cuts made in concrete place under this contract will not be included in measurement.

2. Payment: Square foot price offered in the Price Schedule.

a. {Includes saw cutting to square edges after hydrodemolition}[7]]

E. [8][Concrete Removal:

1. Measurement: Volume of concrete removed.

2. Payment: Cubic yard price offered in the Price Schedule.]

F. [Concrete Removal, Hydrodemolition, [9][_]-Inch Calibration Settings:

1. Measurement: Area of concrete removed as shown on the drawings or as directed by COR.

2. Payment: Square yard price offered in the Price Schedule.][10]

1.02 [11][DEFINTIONS

A. Water jetting nose pressures for concrete removal and surface preparation:

1. Low: Up to 5,000 psi.

2. High: Between 5,000 and 20,000 psi.

3. Ultra high: Between 20,000 and 40,000 psi.]

1.03 REFERENCE STANDARDS

A. American Concrete Institute

1. ACI 318-11	Code Requirements for Structural Concrete and Commentary

B. Bureau of Reclamation (USBR)

1. USBR M-47	Standard Specifications for Repair of Concrete, August 2015 (Part 2, Appendix 1 of "Guide to Concrete Repair" available at http://www.usbr.gov/ (insert URL _____)

C. International Concrete Repair Institute (ICRI)

---

7 Delete if hydrodemolition is not proposed.

8 Used in conjunction with saw cutting pay items.

9 Indicate desired depth of removal, i.e 6. This depth is also used to calibrate the equipment. If more than one removal depth is anticipated, for example at joints, repeat this section for each depth.

10 Delete if hydrodemolition is not proposed.

11 Delete if hydrodemolition not used.

1. ICRI 310.2R-2013 Selecting and Specifying Concrete Surface Preparation for Sealers, Coatings, Polymer Overlays and Concrete Repair

1.04 SUBMITTALS

A. Submit the following in accordance with Section 01 33 00 - Submittals.

B. RSN 03 81 10-1, Concrete Removal Plan:

1. Methods and equipment used to locate embedded metalwork and reinforcement within concrete to be removed.
2. Methods, equipment, and sequence used for cutting and removing concrete.
3. [12][Hydrodemolition equipment, plans, methods, and sequence including handling and disposing of solid waste and wastewater from hydrodemolition and other waste resulting from concrete removal.
   a. Describe calibration plan for each pass, if multiple passes are required.
   b. If mechanical methods are proposed for use in small areas or to finish removal after hydrodemolition, describe equipment, plans, and methods.]
4. Describe cleanup operations, equipment and equipment locations.
5. Plans to prevent damage to remaining concrete.
6. Temporary barriers and enclosures to protect building occupants and contain dust during work.

C. [13][RSN 03 81 10-2, Hydrodemolition Calibration Test Data.

D. RSN 03 81 10-3, Changes to Removal Equipment Settings (if changes are made).]

1.05 EXISTING CONDITIONS

A. Existing concrete consists of cement, sand, and broken rock or gravel.

1. [14][Maximum aggregate size: ___-inch.
2. Design strength: _____ psi. Actual compressive strength of existing concrete may be significantly higher].

B. Information drawings provide general locations of embedded reinforcement, pipe, conduit, and metalwork. Actual locations may vary.

---

[12] Delete if hydrodemolition is not proposed.

[13] Delete if hydrodemolition not used.

[14] Insert maximum size aggregate and design compressive strength, if known, otherwise delete statements.

PART 2 PRODUCTS

Not Used

PART 3 EXECUTION

3.01 GENERAL

A. Cease operations and notify COR if concrete removal operations:

1. Contact electrical conduit containing energized circuits.
2. Crack concrete to remain in place.

B. Do not resume operations until directed by COR.

C. Coordinate performance of noisy, malodorous, or dusty work with the COR.

D. Control waste water in accordance with:

1. Approved plan.
2. Section 01 57 30 - Water Pollution Control.

3.02 EXAMINATION

A. Locate and mark embedded reinforcement, pipe, conduit and metalwork within concrete removal areas before beginning concrete removal.

3.03 [15][PREPARATION

A. Provide temporary barriers and enclosures to protect building occupants and equipment.

B. Erect and maintain weatherproof closures for exterior openings.

C. [16][Abate paint containing heavy metals in accordance with Section 02 83 30 - Removal and Disposal of Coatings Containing Heavy Metals.]

D. Location of concrete removal on drawings is approximate. Verify and adjust concrete removal areas with COR in the field.

E. Prior to starting removal work, obtain written permission from COR.

---

[15] Include preparation requirements that are appropriate for the job. Most jobs will not need all the preparation requirements listed.

[16] Delete if paint with heavy metals not present.

3.04 REMOVAL

A. Remove concrete such that minimum repair thickness is [17]___-inch.

B. Initially remove damaged, deteriorated, loosened, or unbonded portions of existing concrete by high and ultra-high pressure water blasting, jetting, hydrodemolition, jack hammering, or other approved method. Follow with approved mechanical means if necessary.

C. Produce rounded 1-inch radius corners.

D. Produce surfaces and edges suitable for required construction.

E. Use methods which will not damage concrete or reinforcement to remain in place.

F. [18][If damage to concrete is caused by intrusion of a contaminant, remove additional concrete until contaminant concentration is below acceptable threshold values.]

G. Do not use jackhammers in excess of 30 pounds or, dry sandblasting, without COR approval.

1. Points on jackhammer bits shall cleanly break the concrete.
2. Replace or sharpen jackhammer bits without points.

H. Do not line drill perimeters of large openings.

I. Do not pry on concrete to be removed or existing reinforcement.

J. Blasting not permitted.

K. Do not use bush hammers or scabblers.

L. [19][Hydrodemolition:

1. Calibration Test:
   a. [20]___-inch Calibration
      1) COR will designate approximately 30 square foot representative area of damaged concrete for hydrodemolition equipment calibrations.

---

[17] Select minimum repair thickness according to repair materials requirements.

[18] Use if chlorides or another contaminant is causing deterioration.

[19] Delete if hydrodemolition is not proposed.

[20] Specify depth. If more than one depth will be specified repeat section for each depth.

2) Contractor shall calibrate hydrodemolition equipment to achieve removal of[21] ___-inches of sound concrete, as measured from the original elevation.

3) Record nozzle pressure, speed of travel, flow rates, application heights and other parameters required for each calibration.

2. [22][For repair areas at [23][{___-inch}{location}].

a. Use hydrodemolition equipment at the ___-inch calibration settings to remove concrete as shown on the drawings and as verified by the COR.

b. Make one ___-inch pass in areas to minimum dimensions as shown on drawings.]

3. Continually monitor hydrodemolition effectiveness. Make calibration adjustments as required.

4. Remove deteriorated concrete in areas not accessible by hydrodemolition with other methods approved by COR.

5. After hydrodemolition, wash concrete surfaces with 2,000 psi water to remove loose and fragmented concrete debris and other contaminants. Remove cuttings from prepared surfaces before drying.]

M. [24][Drilling:

1. Drill cores at concrete removal corners as approved.

2. Drill holes through concrete where indicated on drawings.

3. Drill holes passing through concrete walls and floors with rotary diamond core bit.

4. Make cut edges clean and sharp.]

N. [25][Saw cutting:

1. [26][Perform after:

a. Hydrodemolition.

b. Removal of concrete damage resulting from reinforcing steel corrosion.]

---

21 Specify depth.

22 Repeat as necessary for more than one concrete removal depth.

23 Indicate concrete removal depth or area or both.

24 Use if drilling is allowed or required.

25 In special circumstances, edge grinding can be substituted for saw cutting. This is appropriate when repairs will be thin. The minimum depth should be no less than 1/4 inch. Consult with Concrete, Geotechnical, and Structural Lab staff if this is anticipated.

26 Delete if hydrodemolition not proposed or damage is not from reinforcing steel corrosion.

2. Fully encompass removal area.
3. Produce clean, sharp edges.
4. Saw cut depth: [27][{Shown on drawings}{___-inches}{full depth of concrete}.]
   a. Do not damage reinforcing steel.
   b. If embedment or other conditions prevent a minimum 1-inch saw cut depth, use a grinder to create a minimum 1/4-inch perpendicular face.
5. Limit number of corners.
6. Acute angels: Greater than approximately 70 degrees. Do not produce sharp corners.
7. Use diamond blade or diamond wire saws.
8. Make cuts normal to exposed concrete surface except as indicated on drawings.
9. Prevent kerfs from crossing.
10. Do not extend saw kerfs beyond specified limits of removal.
11. [28][Chamfer permanently exposed cut 3/4-inch.]

O. Reinforcement:
1. [Replace reinforcing steel bar or section of bar that has lost more than 25 percent of its cross-sectional area.
   a. If adjacent bars are damaged, replace adjacent bars with 20 percent or more loss in cross sectional area.
   b. Replace bars to match original bar size to according to ACI 318, Section 12.14 and 12.15 as appropriate or as approved by the COR.][29]
2. If epoxy coating on steel reinforcement is damaged, repair using a coating approved by the rebar manufacturer. Do not coat previously uncoated reinforcing steel.
3. Remove concrete shadows around circumferences of reinforcing bars.
4. When corroded reinforcement steel bars are exposed, remove additional concrete along corroded bars until a continuous length of 2-in of bar free from corrosion is exposed.
   a. Asses limit of active corrosion on a visual basis.
   b. Edges of additional areas removed shall be cut square as specified below.

[27] Select appropriate depth for saw cutting. Insert number of inches when that option selected.

[28] Include when permanently exposed saw cut edges require chamfer.

[29] Adjust acceptable losses based on design requirements.

c. Remove additional concrete along bar to accommodate couplers or lap splices for replacement reinforcement.

d. Obtain approval from COR prior to additional concrete removal.

5. [30][Where more than 1/3 of the diameter of a reinforcing bar is exposed by removal of concrete to required depth, remove additional concrete to minimum depth of ___ inches below the bar.]

6. When removing concrete in and around reinforcing steel to remain in place, use 15-pound or smaller chipping hammers, high or ultra-high pressure water jetting.

a. For removal away from saw cut edges, cleanly break concrete with pointed jackhammer bits. Replace or sharpen jackhammer bits that are not pointed.

b. Complete removal near repair boundaries with hammers fitted with spade bits.

P. Cleaning and Surface Preparation:

1. Primary Cleaning - Remove dust and debris resulting from concrete removal.

a. Use contained shotblasting, wet sandblasting, or water blasting to remove weakened or damaged concrete microfractured surfaces.

b. If water blasting, use pressure sufficiently high to prepare surface. Pressures up to 15,000 psi may be necessary.

c. Remove materials that weaken the bond between remaining concrete and repair material.

d. Include saw cut or ground faces.

e. After primary cleaning, protect surface from contaminants.

2. Secondary Cleaning - Within 48 hours prior to placement of repair material, use low pressure water jetting to remove materials that may impair bond.

3. Concrete substrate surface roughness: Equivalent to or larger than CSP[31][___] in accordance with ICRI 310.2R.

4. Clean and allow surfaces to dry thoroughly, unless specific repair technique requires application of materials to a saturated surface.

5. Do not use acids for cleaning or preparing concrete surfaces for repair.

---

30 Can be adjusted to “excavate around exposed reinforcing bars”. Consult with CGSL staff.

31 Select appropriate CSP number. 5 is typically used. Hydrodemolition will usually result in a much rougher surface. Choose CSP number 8 if shear transfer is needed. For shear refer to ACI 318, Section 11.6.9, (1/4-inch amplitude required).

3.05 REPAIR

A. Repair concrete and reinforcement outside of prescribed removal lines damaged or loosened during cutting and removal operations. Repair or replace:

1. As directed by COR.
2. In accordance with [32][{Section 03 01 36 - Concrete Repair}{Section 03 33 00 - Cast-in-Place Concrete}].

3.06 DISPOSAL

A. Dispose of removed materials in accordance with Section 01 74 00 - Cleaning and Waste Management.

END OF SECTION

[32] Select section, modify if necessary.

SECTION 03 81 14

CONCRETE REPAIR

GUIDE SPECIFICATION
DEPARTMENT OF THE INTERIOR – BUREAU OF RECLAMATION

REVISIONS

Reference Standards Checked/Updated: N/A

Content Revisions:

02/03/15 New Section

Editorial/Format Revisions:

Template: CSI_15a.dotx

NOTES

Please provide corrections or comments to address shown on home page of USBR Guide Specifications intranet site: intra.usbr.gov/guidespecs

SECTION 03 81 14
CONCRETE REPAIR

PART 1 GENERAL

1.01 MEASUREMENT AND PAYMENT

A. [1][Concrete Preparation:

1. Measurement: Area of concrete prepared.
2. Payment: Price offered in the Price Schedule.

B. Concrete Repair:

1. Measurement: Volume of concrete replaced.
2. Payment: Cubic foot price offered in the Price Schedule.]

C. Cost: Costs for repair of concrete damaged by the Contractor's operations are the Contractor's responsibility.

1.02 [2][DEFINTIONS

A. [3]{Refer to Section 03 81 10 - Concrete Removal.}

B. {Water jetting nose pressures for concrete removal and surface preparation:

1. Low: Up to 5,000 psi.
2. High: Between 5,000 and 20,000 psi.
3. Ultra high: Between 20,000 and 40,000 psi.}]

1.03 [4]REFERENCE STANDARDS

A. American Concrete Institute

1.	ACI 318-11	Building Code Requirements for Structural Concrete and Commentary
2.	ACI 364.3R-09	Guide for Cementitious Repair Material Data Sheet

---

[1] Include if concrete repair is part of the project. Delete if repair is due to contractor mistakes while placing new concrete.

[2] Delete if hydrodemolition not used.

[3] Use A. if defined Section 03 81 10 - Concrete Removal. Use B and C if not defined in Section 03 81 10 - Concrete Removal.

[4] Adjust according to actual repair materials specified.

B. ASTM International (ASTM)

1.	ASTM C 33/C 33M-13	Concrete Aggregates
2.	ASTM C 109/C 109M-13	Compressive Strength of Hydraulic Cement Mortars (Using 2-in. or [50-mm] Cube Specimens)
3.	ASTM C 157/C 157M-08(2014)	Length Change of Hardened Hydraulic-Cement Mortar and Concrete
4.	ASTM C 171-07	Sheet Materials for Curing Concrete
5.	ASTM C 309-11	Liquid Membrane-Forming Compounds for Curing Concrete
6.	ASTM C469/C469M-14	Static Modulus of Elasticity and Poisson's Ratio of Concrete in Compression
7.	ASTM C496/C496M-11	Splitting Tensile Strength of Cylindrical Concrete Specimens
8.	ASTM C 666/C 666M-03(2008)	Resistance of Concrete to Rapid Freezing and Thawing
9.	ASTM C 881/C 881M-14	Epoxy-Resin-Base Bonding Systems for Concrete
10.	ASTM C 882/C 882M-13a	Bond Strength of Epoxy-Resin Systems Used With Concrete By Slant Shear
11.	ASTM C 928/C 928M-13	Packaged, Dry, Rapid-Hardening Cementitious Materials for Concrete Repairs
12.	ASTM C 1315-11	Liquid Membrane-Forming Compounds Having Special Properties for Curing and Sealing Concrete
13.	ASTM C 1581/C 1581M-09a	Determining Age at Cracking and Induced Tensile Stress Characteristics of Mortar and Concrete under Restrained Shrinkage
14.	ASTM C 1602/C 1602M-12	Mixing Water Used in the Production of Hydraulic Cement Concrete

C. Army Corps of Engineers, Concrete Research Division (CRD)

1.	CRD C 39-81	Test Method for Coefficient of Linear Thermal Expansion of Concrete
2.	CRD C 164-92	Direct Tensile Strength of Cylindrical Concrete or Mortar Specimens

D. International Concrete Repair Institute (ICRI)

1. ICRI 320.3R-2012 — Guide for Inorganic Repair Material Data Sheet Protocol

E. Bureau of Reclamation (USBR)

1. USBR M-47 — Standard Specifications for Repair of Concrete, August 2015 (Part 2, Appendix 1 of "Guide to Concrete Repair" available at http://www.usbr.gov/ (insert URL _____)

1.04 SUBMITTALS

A. Submit the following in accordance with Section 01 33 00 - Submittals.

B. RSN 03 81 14-1, Concrete Preparation Plan:

1. Methods, equipment, and sequence used to cut and remove concrete and prepare the surface for repair. Include:

a. Methods and equipment used to locate embedded reinforcement within concrete to be removed.

b. Temporary barriers and enclosures to be provided for workers and containing dust during work.

C. RSN 03 81 14-2, Approval Data:

1. For packaged repair materials

a. Manufacturer's material data sheets for repair material in accordance with data sheet protocol for testing and reporting of data in ACI 364.3R and ICRI 320.3R including surface preparation, mixing, application, and curing instructions.

b. Manufacturer's certification that materials comply with specified requirements and is suitable for intended application.

2. For concrete, supply approval data according to Section 03 30 00 Cast in Place Concrete. Include mixing, transporting, application, and curing plan.

3. Method(s) used to place repair material.

D. RSN 03 81 14-3 Applicator's References and Qualifications:

1. Include project names and locations, name of engineer/architect, and type and quantity of repair material applied.

E. RSN 03 81 14-4, Placement Plan:

1. Describe method(s) to be used to place repair material.

a. Type and placement of formwork and sequence of installation.

b. Show location of chimney(s) to place concrete for repairs to holes. Method(s) for removing material in chimneys after formwork is removed.

1.05 QUALIFICATIONS

A. Employ persons trained for application of repair materials. Minimum of 3 similar repair projects within past 5 years.

1.06 DELIVERY, STORAGE, AND HANDLING

A. In accordance with manufacturer's instructions.

B. Keep materials in manufacturer's original, weatherproof, unopened containers and packaging until installation. Clearly label with product name and manufacturer.

C. Store materials in clean, dry conditions.

D. Protect materials to prevent contamination or damage.

E. [5][For site mixed or ready mixed concrete, meet requirements for Section 03 30 00 - Cast-in-Place Concrete.]

1.07 EXISTING CONDITIONS

A. [6]{Refer to Section 03 81 10 - Concrete Removal.}

B. {Existing concrete consists of cement, sand, and broken rock or gravel.

1. [7][Maximum aggregate size: ___-inch.
2. Design strength: _____ psi. Actual compressive strength of existing concrete may be significantly higher].

C. Information drawings provide general locations of embedded reinforcement, pipe, conduit, and metalwork. Actual locations may vary.}

1.08 AMBIENT CONDITIONS

A. Ambient and Surface Temperatures: [8][__ to __] degrees F at time of application.

B. Exterior Applications: If rain, snow, or excessive moisture is expected during application or within 24 hours after application, protect repairs from freezing and moisture.

---

[5] Delete in not using Section 03 30 00 - Cast-in-Place Concrete.

[6] Use A. if defined Section 03 81 10 - Concrete Removal. Use B and C if not defined in Section 03 81 10 - Concrete Removal.

[7] Insert maximum size aggregate and design compressive strength, if known, otherwise delete statements.

[8] Insert if known, otherwise indicate unknown.

PART 2 PRODUCTS

2.01 NEW CONCRETE REPAIR MATERIALS

A. Concrete Age: Between 24 and 72 hours.

B. Packaged Repair Material.

1. Depth: Between 1/4-inch and the bottom of the nearest reinforcing steel.
2. Too small for concrete.
3. Suitable for repair thickness.
4. [9][__], or equal with the following[10] essential characteristics
   a. Formulated for low shrinkage.
   b. Durable in exposure conditions.
   c. Compressive Strength, ASTM C109, 73 degrees Fahrenheit:
      1) 1 Day: Minimum 1,000 psi.
      2) 7 Days: Minimum 3,000 psi.
      3) 28 Days: Minimum 5,000 psi.
   d. 28 Day Drying Shrinkage, ASTM C157: Less than 0.050 percent.
   e. Static Modulus of Elasticity, ASTM C469, 28 Days: 3.0 to 3.5 x 10^6 psi.
   f. Coefficient of Thermal Expansion, CRD C 39: 7.5 to 8.5 x 10^{-6} in/in/degree F.
   g. Freezing and Thawing Resistance, ASTM C666, Procedure A: Average Durability Factor, 300 Cycles, greater than 90.
   h. Average age at cracking, ASTM C1581: Greater than 60 days.
   i. Direct Tensile Strength, CRD C 164, 2-inch by 4-inch specimens, Average Tensile Strength:
      1) 7 Days: Minimum 300 psi.
      2) 28 Days: Minimum 400 psi.
   j. Bond Strength, ASTM C882, Modified per ASTM C928, 3-inch by 6-inch slant-shear specimens, Average Slant-Shear Bond Strength:
      1) 7 Days: Minimum 1,000 psi.
      2) 28 Days: Minimum 2,000 psi.

---

[9] List name and manufacturer for repair materials. Repeat for each repair material option. Consult with CGSL for recommendations

[10] Consult with CGSL to select characteristics

k. Mix components in accordance with manufacturer's instructions.

C. Portland Cement Mortar

1. Depth: No deeper than the bottom of the nearest reinforcing steel.
2. Less than about 6-inches across.
3. Too small for concrete.
4. Portland cement: As specified in Section 03 30 00 – Cast-In-Place Concrete.
5. Sand: ASTM C33 fine aggregate, except 100 percent passing No. 16 sieve.
6. Clean water: ASTM C1602 including optional requirements of Table 2.
7. Consistency - 1 part cement; 2 parts, by volume, of sand; and enough water so that mortar has consistency of thick cream.

D. Dry Pack Mortar

1. For repairs deeper than opening (holes).
2. Minimum depth – one inch.
3. Depth equal to or greater than width.
4. Does not extend through section
5. Does not extend behind or under reinforcing steel.
6. Less than 1 square foot in surface area.
7. Portland cement: As specified in Section 03 30 00 – Cast-In-Place Concrete.
8. Sand: ASTM C33 fine aggregate, except 100 percent passing No. 16 sieve.
9. Clean water: ASTM C1602 including optional requirements of Table 2.
10. Consistency - 1 part cement to 2.5 parts sand with sufficient water so that the mortar will stick together when squeezed by hand but not exude water.
11. [[11]{Bond Coat: 1 part cement to 1 parts and mixed with sufficient water to create a fluid paste} {Epoxy bond coat: ASTM C881 type II, grade 2, [class B] [C resin]}].

2.02 OLD CONCRETE REPAIR MATERIALS

A. Concrete Age: Greater than 72 hours.

B. [12][Packaged Repair Material.

1. Used on both new and old concrete.

[11] Select type of bond coat if needed. Consult with Part 1 of M47 and CGSL staff.

[12] Use this paragraph if Packaged Repair Material used.

2. Refer to Packaged Repair Material in New Concrete Repair Materials above.]

C. [13][{Concrete meeting the requirements of Section 03 30 00 - Cast- in-Place Concrete} {Silica fume concrete meeting the requirements of Section 03 30 00 - Cast- in-Place Concrete } {Shotcrete meeting the requirements of Section 03 37 02 - Shotcrete} proportioned to be shrinkage compensating with:

1. PREVent C, as manufactured by Premier Magnesia, www.premiercpg.com, or equal with the following essential characteristics:

   a. Facilitate expansion of concrete at essentially the same rate as shrinkage during the curing period.

   b. Reduce the capillary surface tension of pore water.

   c. Provides at least 60 percent shrinkage reduction.

   d. Formulated for use in freezing weather.

   e. ASTM C1581: No cracking for a minimum of 90 days.]

D. Dry Pack Mortar:

1. Used on both new and old concrete.

2. Refer to Dry Pack Mortar in New Concrete Repair Materials above.

2.03 CURING MATERIALS

A. [14]{Refer to Section 03 30 00 - Cast-in-Place Concrete}

B. {Water: ASTM C1602, including optional requirements of Table 2.

C. Curing compound:

1. ASTM C309, type 1-D.

2. ASTM C1315, type I-A

D. Polyethylene film: ASTM C171, white opaque.}

PART 3 EXECUTION

3.01 GENERAL

A. Cease operations and notify COR if concrete repair operations:

---

[13] Use this paragraph if concrete, shotcrete, silica fume concrete or other special concrete will be used for repair.

[14] Delete A if Section 03 30 00 - Cast-in-Place is not included in the project. Delete B, C and D if Section 03 30 00 - Cast-in-Place Concrete is included with project.

1. Contact electrical conduit containing energized circuits.
2. Crack concrete to remain in place.
3. Do not resume operations until directed by COR.

B. Coordinate performance of noisy, malodorous, or dusty work with the COR.

C. Prior to starting removal work, obtain written permission from COR.

D. Do not place repair material until approved by COR.

E. Remove repair material outside of repair area.

F. Clean so repair material is flush with the surface.

G. Repair concrete and reinforcement outside of prescribed removal lines damaged or loosened during cutting and removal operations. Repair or replace as directed by COR.

3.02 NEW CONCRETE REPAIR

A. Grinding

1. To correct surface bulges, offsets, and other irregularities.
2. Concrete surfaces subjected to potential cavitation erosion – Limit grinding depth so that no more than 1/4-inch cross-section of aggregate particle is exposed.
3. Concrete surfaces exposed to public view - Limit grinding depth so that no more than 1/2-inch cross-section of aggregate particle is exposed.
4. Limit grinding depth so that no more than ½ the diameter of the largest aggregate particle is exposed.
5. If limits cannot be met, remove and replace concrete.

B. Preparation

1. Remove abrupt protrusions (i.e. form fins) flush with the concrete surface.
2. Remove surface contaminants such as latencies by pressure washing, or by other methods as approved by the COR. Adjust pressure to remove contaminants and limit concrete excavation, unless excavation is required.
3. Do not interrupt curing of adjacent concrete. Keep concrete surfaces moist until repairs are completed.

C. Portland Cement Mortar

1. Moisten surface and place mortar on damp surface.
2. For small repairs, use sponge rubber float to fill surface defects with mortar.
3. For larger repairs, spray apply mortar.

4. If repairs are more than 1 inch deep, apply mortar in layers not more than 3/4 of an inch thick. Allow sufficient time between layers so material does not sag.
5. Rub dry mix of same proportions to stiffen and solidify plastic material.
6. Curing
   a. Immediately after placement, bring concrete surface and surface of repair material to saturated surface dry (SSD) by misting.
   b. Maintain moist curing for 14 days
   c. Apply curing compound immediately after surface appears dry. Use curing similar to adjacent concrete.

D. Packaged Repair Material

1. Bring surface and surrounding area to [15][_].
2. For small repairs, use sponge rubber float to fill surface defects with mortar.
3. For larger repairs, spray apply mortar.
4. Follow manufacturer's curing requirements.

E. Dry Pack Mortar

1. Roughen surfaces using grinding wheel, grinding bit or other approved tools. Do not use metal.
2. Remove unconsolidated concrete, latencies, and other contaminants from hole
3. Remove abrupt protrusions (i.e. form fins) flush with the concrete surface.
4. [16][{Thoroughly moisten surface using damp rags placed in holes for a minimum 24 hours.} {Coat interior of the hole with a mortar bond coat consisting of 1 part cement to 1 part sand and sufficient water to produce a fluid past.} {Apply epoxy bond coat to interior surfaces of hole.}]
5. [17][{Immediately after removing rags, blow oil-free compressed air into the hole to dry the surfaces.} {Immediately after applying bond coat pack the hole with dry pack mortar.}
6. Pack in hole in lifts small enough to compact using a hardwood dowel and hammer. Lifts should be no more than 2-inches for large diameter holes, and may be as small as 3/8 inch for small diameter holes.
7. Pack the top by laying the flat side of a hardwood board against the fill and striking the board with a hammer.

---

[15] List required moisture content of surface. For cementitious repair materials, that is usually SSD. Other special repair materials may require different moisture conditions.

[16] Consult CGSL and M-47.

[17] Consult CGSL and M-47.

8. Thoroughly rub mortar over area with a sponge rubber float or steel trowel to finish surface.
9. Curing
   a. Immediately after placement of material, bring concrete surface and surface of repair material to SSD by misting.
   b. Once surface appears damp, discontinue misting and apply curing compound immediately after surface appears to dry.

3.03 OLD CONCRETE REPAIR

A. Shallow Repairs
   1. For defects where less than 1/3 circumference of reinforcing steel.
   2. Where needed, shape repair area to prevent trapping air in placement.
   3. Use materials suitable for thickness of repair and as approved.
   4. Contain materials with formwork as needed.
   5. For stiff repair materials, thoroughly pack material into void and rub over area with a sponge rubber float or steel trowel to fill defects.

B. Remove and prepare concrete in accordance with Section 03 -81 10 - Concrete Removal.

C. Bring concrete to [18][_] moisture condition before placement of repair material. Ensure surface moisture conditions meet repair material requirements.

D. Apply repair materials.
   1. Remove standing water.
   2. Mix components as approved.
   3. At locations indicated on drawings, or as directed by COR.
   4. Follow approved application instructions:
   5. For vertical and overhead repair (stiff) material, apply repair material with sufficient pressure to ensure intimate contact with substrate.
   6. For horizontal repair materials or repair materials contained by formwork, use placement methods to ensure intimate contact of repair material with substrate. Remove forms when repair mortar has reached sufficient strength so it is not damaged by form removal.

[18] For cementitious repair materials, use saturated-surface-dry (SSD). Presoak prepared concrete surface to SSD condition and surface dry immediately. Other repair materials may require different moisture conditions.

E. Curing: [19][{Follow manufacturer's instructions} {According to Section 03 30 00 Cast in Place Concrete} {Curing Compound: Apply curing compound in accordance with product instructions.} {Moist Curing:

1. Moist cure for [_] days, depending on drying conditions.
2. Include time in form.
3. Moist cure for [_] days in hot, dry, or windy conditions.}]

3.04 PROTECTION

A. Protect from direct sunlight, wind, and other conditions that could cause rapid drying.

B. Protect from damage or deterioration during project.

3.05 REINFORCING STEEL

A. [20][Replace any single reinforcing steel bar or section of bar that has lost more than 25 percent of its cross-sectional area.

1. If adjacent bars are damaged, replace adjacent bars with 20 percent or more loss in cross sectional area.
2. Replace bars to match original bar size according to ACI 318, section 12.14 and 12.15 as appropriate, or as approved by the COR.]

B. If epoxy coating on epoxy coated steel reinforcement is damaged, repair damaged coating using an epoxy coating approved by the rebar manufacturer. Do not coat previously uncoated reinforcing steel.

3.06 FORMING

A. [21][Use formwork to protect, prevent movement and leakage of repair material. Construct formwork in accordance with Section 03 11 10 - Concrete Forming for specified finish.

1. Repairs to holes:
   a. Construct formwork in sections to allow for concrete lift placement. Maximum placement height – [22][_ inches]
   b. Use form chimneys to allow for concrete consolidation and observe placement.
      1) Multiple chimneys may be needed.

---

19 Select the appropriate curing method.

20 As appropriate, adjust acceptable losses based on design requirements.

21 For formwork to repair holes in wall and other vertical or nearly vertical surfaces, refer to Chapter 4 of Part 1 of the Guide and CGSL staff for guidance.

22 Select maximum lift height. Refer to Chapter 4 of Part 1 of this Guide and CGSL staff for guidance

2) After form removal, remove chimney concrete and smooth to match adjacent surfaces. Depending on repair material, chimney concrete can be removed about 24 hours after placement.]

3.07 FINISHING

A. Tooled Edges: Tool exposed edges to a radius of ¼ inch.

B. Where finishes are not specified or shown on drawings for a particular surface, finish concrete as specified for similar work.

C. Finish concrete in presence of COR unless inspection is waived.

D. [23]{Formed surfaces:

1. Finish F2:

a. Applies to exposed formed surfaces as specified in Table 03 81 14A - Formed Surfaces.

b. Recess tie rod ends and fill recess with dry pack or other material approved by COR.

E. Unformed surfaces:

1. Finish class is designated by symbol U1.

2. Finish U1 (Screeded Finish):

a. Applies to unformed surfaces as specified in Table 03 81 14B - Unformed Surfaces.

b. Level and screed concrete to produce even uniform surfaces.}

F. {Refer to Section 03 30 00 - Cast-in-Place Concrete.}

3.08 [24]FINISH, SURFACE TOLERANCES, AND CURING SCHEDULES

A. {Meet requirements of Section 03 30 00 - Cast-in-Place Concrete for surface tolerances.}

---

[23] Select the appropriate finish and tolerance. The listed items are for example only. Different work may require different finished and different tolerances. If specification has Section 03 30 00 - Cast-in-Place delete D and E. If specification doesn't have Section 03 30 00 - Cast-in-Place use D and E, modified for project.

[24] Delete Table if specifications have Section 03 30 00- Cast-in-Place Concrete. If specifications do not have Section 03 30 00 - Cast-in-Place section, update table with required finishes and tolerances.

Table 03 81 14A - Formed Surfaces

Surface	Finish	Maximum Allowable Tolerances	Acceptable Curing Methods
All repair surfaces	F2	T3	Water White wax-base, or white water-emulsified resin-base curing compound

Table 03 81 14B - Unformed Surfaces

Surface	Finish	Maximum Allowable Tolerances	Acceptable Curing Methods
All repair surfaces	U1	T3	Water White wax-base or white water-emulsified resin-base curing compound

3.09 DISPOSAL

A. Dispose of removed materials in accordance with Section 01 74 00 - Cleaning and Waste Management.

END OF SECTION

SECTION 03 81 15
POLYMER CONCRETE SURFACE REPAIR

GUIDE SPECIFICATION
DEPARTMENT OF THE INTERIOR – BUREAU OF RECLAMATION

REVISIONS

Reference Standards Checked/Updated: 6/16/15

Content Revisions:

05/04/15 New Section

Editorial/Format Revisions:

Template: CSI_15a.dotx

NOTES

Refer to Part 1 of the Guide to Concrete Repair to determine if the repair method detailed in this specification is appropriate for the damaged concrete.

Please provide corrections or comments to address shown on home page of USBR Guide Specifications intranet site: intra.usbr.gov/guidespecs

SECTION 03 81 15
POLYMER CONCRETE SURFACE REPAIR

PART 1 GENERAL

1.01 MEASUREMENT AND PAYMENT

A. Concrete Surface Repair:

1. Measurement: Surface area of repair as directed by COR.
2. Payment: Square foot price offered in the Price Schedule.

1.02 [1][REFERENCE STANDARDS

A. ASTM International (ASTM)

1.	ASTM C307-03(2012)	Tensile Strength of Chemical Resistant Mortar, Grouts, and Monolithic Surfacings
2.	ASTM D570-98(2010)	Water Absorption of Plastics
3.	ASTM C579-01(2012)	Compressive Strength of Chemical-Resistant Mortars, Grouts, Monolithic Surfacings, and Polymer Concrete
4.	ASTM C881/C881M-14	Epoxy-Resin-Base Bonding Systems for Concrete
5.	ASTM D638-14	Tensile Properties of Plastics
6.	ASTM D695-10	Compressive Properties of Rigid Plastics
7.	ASTM D4541-09	Pull-Off Strength Using Portable Adhesion Testers

B. International Concrete Repair Institute (ICRI)

1.	ICRI 210.3R-2013	Guide for Using In-Situ Tensile Pulloff Tests to Evaluate Bond of Concrete Surface Materials
2.	ICRI 310.2R-2014	Selecting and Specifying Concrete Surface Preparation for Sealers, Coatings, Polymer Overlays and Concrete Repair

1.03 SUBMITTALS

A. Submit the following in accordance with Section 01 33 00 - Submittals.

[1] Adjust references for specific polymer selected.

B. RSN 03 81 15-1, Approval data:

1. Product Data:

a. Manufacturer's technical data including recommendations for application and use.

b. Test reports and certifications substantiating products comply with requirements.

2. Describe methods, equipment, and sequence to be used for placing repair mortar.

3. Certification of installer, if required by repair mortar manufacturer.

4. Concrete surface preparation method.

1.04 PROJECT CONDITIONS

A. Information drawings provide general locations of embedded reinforcement, pipe, conduit, and metalwork. Actual locations of these items may vary from what is shown on the drawings.

B. Coordinate performance of noisy or dusty work with the COR.

1.05 AMBIENT CONDITIONS

A. Ambient and Surface Temperatures: [2][__ to __] degrees F at time of application.

B. Exterior Applications: Do not apply repair mortar when rain, snow, or excessive moisture is expected during application or within 24 hours after application without protection.

PART 2 PRODUCTS

2.01 REPAIR MORTAR

A. Repair mortar: [3][_] or equal with the following essential characteristics:

1. 100 percent solids.

2. Low odor.

3. Trowelable to a smooth finish.

4. [4][ASTM C881 Type III, Grade 3, Class B, D, or E as appropriate:

a. Suitable for application to damp or wet concrete.

---

[2] Insert if known, otherwise indicate unknown.

[3] List suitable products here. Consult with CGSL staff for recommendations.

[4] List appropriate characteristics here. Values shown are for example only. Consult with CGSL staff for recommendations.

b. 3 component.

c. Compressive Strength:

1) ASTM D695: 6170 psi

2) ASTM C579: Maximum 6200 psi

d. Adhesion:

1) ASTM D4541: 600 psi

2) ICRI 210.3R: 300 psi

B. Tensile Strength, ASTM C307: 1810 psi

1. Tensile Elongation, unfilled, ASTM D638: 10 percent

2. Volatile Organic Compounds: 0 grams/liter.

3. Absorption, ASTM D570: 0.3 percent.]

PART 3 EXECUTION

3.01 REPAIRS

A. Repair concrete surfaces of [5][_]

3.02 PREPARATION

A. Prepare concrete according to 03 81 10-Concrete Removal.

B. Prior to preparing surface, obtain written permission from COR.

C. Wet sandblast, steel shotblast, or water jet surfaces, or other method approved by COR to create a surface profile equivalent to or larger than CSP [_][6] in accordance with ICRI 310.2R.

D. Concrete surface: Minimum 100 psi when tested in accordance with ICRI 210.3R.

E. Clean and allow surfaces to dry thoroughly, unless specific repair technique requires application of materials to a saturated surface.

F. Do not use of acids for cleaning or preparing concrete surfaces.

---

[5] List concrete surfaces to be repaired.

[6] Select appropriate CSP number. 5 is typically used. Hydrodemolition will usually result in a much rougher surface.

3.03 INSTALLATION

A. Follow manufacturer's instructions and requirements for:

1. Priming, mixing, placing and curing repair mortar.
2. Surface temperature.
3. Conditioning temperature of polymer compound components.

B. Completely cover exposed aggregate and match existing surfaces.

C. For thick repair areas place repair mortar in lifts or layers to limit heat generation during curing.

D. Finished surface: Smooth within [7][1/16] inch.

3.04 PROTECTION

A. Protect repair from weather and other damaging conditions.

B. [8]Repair concrete and reinforcement outside of prescribed removal lines damaged or loosened during cutting and removal operations. Repair or replace as directed by COR.

END OF SECTION

[7] Select maximum depth or height of offsets.

[8] Coordinate with Section 03 81 10 - Concrete Removal. Delete this paragraph in this Section if same paragraph is used Section 03 81 10 - Concrete Removal.

SECTION 03 81 16

EPOXY GROUT CRACK REPAIR

GUIDE SPECIFICATION
DEPARTMENT OF THE INTERIOR – BUREAU OF RECLAMATION

REVISIONS

Reference Standards Checked/Updated: 07/25/15

Content Revisions:

07/25/15 New Section

Editorial/Format Revisions:

Template: CSI_15a.dotx

NOTES

Refer to Part 1 of the Guide to Concrete Repair to determine if the repair method detailed in this specification is appropriate for the damaged concrete.

Please provide corrections or comments to address shown on home page of USBR Guide Specifications intranet site: intra.usbr.gov/guidespecs

SECTION 03 81 16
EPOXY GROUT CRACK REPAIR

PART 1 GENERAL

1.01 MEASUREMENT AND PAYMENT

A. Prepare Cracks:

1. Measurement: Length of prepared cracks.
2. Payment: Applicable lineal foot offered in Price Schedule.

B. Inject Cracks:

1. Measurement: Length of injected cracks.
2. Payment: Applicable lineal foot offered in Price Schedule.

1.02 REFERENCE STANDARDS

A. ASTM International (ASTM)

1. ASTM C 881/C 881M-14 — Epoxy-Resin-Base Bonding Systems for Concrete

B. Bureau of Reclamation (USBR)

1. USBR M-47 — Standard Specifications for Repair of Concrete, August 2015 (Part 2, Appendix 1 of "Guide to Concrete Repair" available at http://www.usbr.gov/ (insert URL _____)

1.03 SUBMITTALS

A. Submit the following in accordance with Section 01 33 00 - Submittals.

B. RSN 03 81 16-1, Epoxy Grout:

1. Epoxy Grout Plan: Include work sequence, ports and/or packers to inject grout into cracks, method of drilling holes if using mechanical packers, grout equipment, crack capping compound, and disposal of debris.
2. Manufacturer's product data.
3. Manufacturer's Certification: Epoxy grout and capping compound meets specified requirements.
4. Manufacturer's Instructions: Environmental, storage, surface preparation, mixing, installation, and cleanup instructions.

C. RSN 03 81 16-2, Qualifications.

1. Include project names and locations, type and quantity of grout applied, engineer or architect name, name of person applying grout.

1.04 QUALIFICATIONS

A. Applicator :

1. Minimum of 3 successfully completed epoxy grouting projects in the past 5 years.
2. Trained for application of epoxy grout.

B. Grout Manufacture's Representative: 5 years of experience with manufacturer's product used in similar applications.

1.05 DELIVERY, STORAGE, AND HANDLING

A. Deliver materials to jobsite in manufacturer's original unopened packaging with labels and seals intact.

B. Store materials in accordance with manufacturer's instructions.

C. Store joint sealant at temperatures between 40 degrees Fahrenheit and 80 degrees Fahrenheit or per manufacturer's instructions, whichever is more stringent.

1.06 ENVIRONMENTAL REQUIREMENTS

A. Install materials within temperature limits specified by materials manufacturer.

B. Maintain temperatures limits during curing as specified by materials manufacturer.

C. Comply with material manufacturer's environmental restrictions.

1.07 PROJECT CONDITIONS

A. Concrete to be removed consists of cement, sand, and broken rock or gravel.

1. Maximum aggregate size: _____-inch.
2. Design compressive strength: _____ lb/in^2 at 28 days.
3. Actual compressive strength may be substantially higher or lower than the design compressive strength.

B. Information drawings provide general locations of embedded reinforcement, pipe, conduit, and metalwork. Actual locations of these items may vary from what is shown on the drawings.

1.08 AMBIENT CONDITIONS

A. Exterior Applications: Do not apply repair mortar when rain, snow, or excessive moisture is expected during application or within 24 hours after application without protection.

PART 2 PRODUCTS

2.01 EPOXY

A. Injection epoxy: [1][_.

1. ASTM C881.
2. Viscosity: ___.
3. Gel time: ____.
4. Compressive Strength: ____.
5. Tensile Strength: ____]

B. Capping epoxy: As recommended by injection epoxy manufacturer

2.02 ACCESSORIES

A. Ports and Packers – As recommended by epoxy grout manufacturer

PART 3 EXECUTION

3.01 GENERAL

A. Cease operations and notify COR if concrete repair operations:

1. Contact electrical conduit containing energized circuits.
2. Crack concrete to remain in place.
3. Do not resume operations until directed by COR.

B. Coordinate performance of noisy or dusty work with the COR.

3.02 PREPARATION

A. Remove dirt and debris from within cracks prior to injection. If using water, dry as recommended by the grout manufacturer.

B. Install grout ports:

[1] List appropriate products and properties.

1. As recommended by grout manufacturer.
2. On surface of crack or in injection holes as approved by COR.

C. Seal crack openings as recommended by grout manufacturer.

1. Prepare surfaces adjacent to cracks to expose clean, sound concrete. Remove mortar, laitance, dust, coatings, curing compounds, petroleum products, corrosion, and other foreign material
2. Capture concrete debris.

D. Repair concrete outside of prescribed injection area which is damaged or loosened during repair operations. Repair in accordance with USBR M-47 as approved by COR.

E. Obtain approval of crack preparation from COR before installing epoxy in cracks.

3.03 EPOXY GROUTING

A. Completely fill cracks.

B. Multiple port injection allowed if approved by grout manufacturer.

C. Start injection at lower ports.

1. Attach injection lines to lowest injection port and proceed upward.
2. When grout is visible at elevation of next higher port, close or cap injection port attached to injection lines.
3. Proceed to next higher injection ports.

D. Keep ports capped or closed and in-place until grout is cured.

E. Pump:

1. Motor driven grout pump, not hand operated, made to pump epoxy grout:
2. Suitable for injecting approved grout at correct proportion.
3. Output: At least 0.4 gpm.
4. Output Pressure:
   a. Appropriate for grout plan and crack size.
   b. Pressures as high as 1,000 psi depending on crack characteristics.
5. Record grout pressures at ports.

F. Notify COR if quantity of injected grout is larger than expected.

3.04 FIELD QUALITY CONTROL

A. At job startup, onsite grout manufacturer's representative to approve:: :

1. Equipment and methods used for crack preparation, grout mixing, and grout installation before work begins.
2. Crack preparation.
3. Grout installation.

3.05 CLEANING

A. Remove ports, capping epoxy, and soiling from adjacent surfaces.

3.06 DISPOSAL

A. Dispose of removed materials in accordance with Section 01 74 00 - Cleaning and Waste Management.

END OF SECTION

SECTION 03 81 17
CHEMICAL GROUT CRACK REPAIR

GUIDE SPECIFICATION
DEPARTMENT OF THE INTERIOR – BUREAU OF RECLAMATION

REVISIONS

Reference Standards Checked/Updated: 06/25/15

Content Revisions:

05/19/15 New Section

Editorial/Format Revisions:

Template: CSI_15a.dotx

NOTES

Refer to Part 1 of the Guide to Concrete Repair to determine if the repair method detailed in this specification is appropriate for the damaged concrete.

Please provide corrections or comments to address shown on home page of USBR Guide Specifications intranet site: intra.usbr.gov/guidespecs

SECTION 03 81 17
CHEMICAL GROUT CRACK REPAIR

PART 1 GENERAL

1.01 MEASUREMENT AND PAYMENT

A. Holes:

1. Measurement: Number of holes drilled and grouted.
2. Payment: Hole price offered in the Price Schedule.
   a. Includes drilling hole, installing port, connection for injecting grout, and plugging hole after grouting.

B. Chemical grout:

1. Payment: Lump sum price offered in the Price Schedule.
   a. Price to include chemical grout material, dry oakum jute, curing, cleaning, any additives, and grouting.

1.02 [1][REFERENCE STANDARDS

A. Bureau of Reclamation (USBR)

1. USBR M-47 — Standard Specifications for Repair of Concrete, August 2015 (Part 2, Appendix 1 of "Guide to Concrete Repair" available at http://www.usbr.gov/ (insert URL _____)

1.03 SUBMITTALS

A. Submit the following in accordance with Section 01 33 00 - Submittals.

B. RSN 03 81 17-1, Chemical Grout:

   a. Manufacturer's product data for grout material and dry oakum jute.
   b. Manufacturer's certification that grout is suitable for intended service conditions and exposure.
   c. Manufacturer's environmental, storage, preparation, mixing, installation, and cleanup instructions for grout material.
   d. Grout plans to include method of drilling holes, equipment, ports and/or packers to inject grout into cracks and voids.

---

[1] Adjust according to actual chemical grout specified.

C. RSN 03 81 17-2, Qualifications:

a. Include project names and locations of past similar work, name of engineer/architect, and type and quantity of chemical grout applied.

1.04 QUALIFICATIONS

A. 3 similar projects within the past 5 years.

1.05 DELIVERY, STORAGE, AND HANDLING

A. Deliver materials to jobsite in manufacturer's original unopened packaging with labels and seals intact.

B. Store materials in protected area in accordance with manufacturer's instructions.

C. Store sufficient quantities of components onsite to not delay grouting operations.

1.06 EXISTING CONDITIONS

A. Existing concrete consists of cement, sand, and broken rock or gravel.

1. [2] [Maximum aggregate size: ___-inch.

2. Design strength: _____ psi. Actual compressive strength of existing concrete may be significantly higher].

B. Information drawings provide general locations of embedded reinforcement, pipe, conduit, and metalwork. Actual locations may vary.

1.07 AMBIENT CONDITIONS

A. Ambient and Surface Temperatures: [3][__ to __] degrees F at time of application.

1.08 ENVIRONMENTAL REQUIREMENTS

A. Install materials within temperature limits specified by materials manufacturer.

B. Comply with material manufacturer's environmental restrictions.

PART 2 PRODUCTS

2.01 MATERIALS

A. [4]Chemical Grout:

---

[2] Insert maximum size aggregate and design compressive strength, if known, otherwise delete statements.

[3] Insert if known, otherwise indicate unknown.

1. _, manufactured by Avanti International, 822 Bay Star Blvd., Webster, TX, 77598, 800-877-2570, www.avantigrout.com.
2. _, manufactured by Strata-Tech, 3601 104th Street, Des Moines, IA, 50322, 515-251-7770, www.strata-tech.com.
3. _, manufactured by W.R. Grace, 62 Whittemore Ave., Cambirdge, MA 02140, Phone: 800-732-0166, www.grace.com/construction/en-us/injection-materials.
4. _, manufactured by Resiplast US, PO Box 308, Cypress, TX 77410, 855-909-1800,. www.spetec.com/producten.html
5. [5]Use one of the above products or equal with the following essential characteristics:
   a. _____ polyurethane.
   b. Contains no solvents.
   c. Viscosity: ___ cps maximum.
   d. Expansion: ___ percent maximum.
   e. Specific gravity: _____.
   f. Cured Tensile Strength: ____psi +/- __psi.

B. Oakum jute: __, manufactured by __; or equal, with the following essential characteristics:
   1. Minimum: 7 strand.
   2. 1-1/4 to 1-1/2 turns per foot.
   3. 2-inch diameter

C. Accessories: Injection ports with valves or other back-flow preventer.

PART 3 EXECUTION

3.01 GENERAL

A. Cease operations and notify COR if concrete removal operations:
   1. Contact electrical conduit containing energized circuits.
   2. Crack concrete to remain in place.

B. Do not resume operations until directed by COR.

---

[4] Select at least 3 sources for grout and one for jute that are suitable for anticipated work. Consult with CGSL staff for recommendations.

[5] Fill in blanks of essential characteristics. Consult with CGSL staff for recommendations.

C. Coordinate performance of noisy, malodorous, or dusty work with the COR.

D.

3.02 PREPARATION

A. Offset drill holes along leaks to intercept leaks at least [6][_]-inches from surface or as approved by COR.

B. Space holes every [7][_]-inches or as approved by the COR.

C. Drill holes [8]{on alternating sides of cracks} {along joint} to ensure intersection.

D. Diameter of hole appropriate for injection ports.

E. If rebar is encountered, adjust location of hole to avoid rebar.

F. Blow out holes to remove dust created by drilling prior to placing packers.

G. Install ports. Use hammer-in, mechanical, or threaded ports or packers or other type as approved by COR in holes.

1. Use ports that prevent backflow.

H. Prior to injecting grout, flush water through ports to ensure connection of hole to voids and to clean debris from hole and voids. Alternating use of air pressure and water may be needed to clean void and crack.

1. Flush until water is clean.
2. [9]Do not exceed __ psi for flushing unless approved by COR.
3. If the hole does not intersect with the crack or joint, drill new hole.

I. Capture concrete debris, and drill cuttings.

J. Obtain approval of grout preparation from COR before injecting grout.

3.03 INSTALLATION

A. Equipment:

1. Grout pump:

---

[6] Typically, the intercept depth is half way through the section, or at least 12-inches deep for thick sections. Deeper is typically better.

[7] As needed to ensure proper filling of leak.

[8] Choose appropriate location

[9] Insert acceptable pressure.

a. Mechanically driven, not hand operated, specifically for viscous materials:

b. Capable of pumping grout component(s) at proper ratio.

c. Output: At least 1.0 gpm.

d. Output pressure: At least 1000 psi.

2. Two component grouts: Place components in graduated containers to monitor proportioning throughout grouting operations.

B. Chemical grouting:

1. Mix and install grout according to manufacturer's instructions. Use catalysts and/or accelerators as appropriate.

2. Just prior to injection, pump grout through grout line(s), into a suitable container to confirm grout is proportioned to cure. Record grout pressures at each port.

3. [10]Start injection at lowest area of leak and work across and up.

a. Attach injection lines to lowest injection port. Proceed across and upward.

b. When grout is visible at adjacent port(s), or at edge of leak, close injection port valve attached to injection lines

c. If excessive grout leaks from leak, plug leaks with resin soaked oakum or other material as approved by COR.

d. Proceed to next appropriate injection port.

e. Keep grout contained and in place until grout is cured.

C. Maximum injection pressure:

1. Do not exceed maximum injection pressure unless approved by COR.

2. Determine for each grout material just prior to injection.

3. Measure pressure at pump or other suitable location as approved by the COR.

4. Assemble grout, grout pump, grout lines, and grout injection gun as will be used during grouting operations and attach grout gun to injection port similar to those in drilled holes.

5. Determine base pressure needed to move grout through grout lines, injection gun, and injection port at appropriate quantity.

a. [11]Maximum pressure: Base pressure plus ___ psi.

b. Higher pressures subject to approval by COR

6. [12][Do not warp or deflect liners and plates.]

---

[10] Injection may require an iterative process after initial cure to ensure complete crack or joint seal.

[11] Insert maximum pressure.

[12] Include if appropriate – i.e. injecting behind a steel draft tube liner.

7. Notify COR any time quantity of injected resin is larger than expected.

3.04 REPAIR

A. Remove defective or contaminated grout. Reclean and replace grout.

3.05 CLEANING

A. Remove excess grout, and soiling from adjacent surfaces.

B. [13]Remove packers.

C. After grouting, repair drill holes using dry pack method in accordance with USBR M-47.

1. Repair to depth of 3 inches, to depth of open hole after grout port is removed, or to depth of top of cured grout in hole, whichever is greater.

END OF SECTION

[13] In some cases, the packers may be left in place.

SECTION 03 81 19
CONCRETE CRACK HEALER AND PENETRATING SEALER

GUIDE SPECIFICATION
DEPARTMENT OF THE INTERIOR – BUREAU OF RECLAMATION

REVISIONS

Reference Standards Checked/Updated: 07/25/15

Content Revisions:

07/25/15 New Section

Editorial/Format Revisions:

Template: CSI_15a.dotx

NOTES

Refer to Part 1 the Guide to Concrete Repair to determine if the repair method detailed in this specification is appropriate for the damaged concrete. Contact Concrete, Geotechnical, and Structurall Lab (CGSL) 86-68530 for appropriate use.

Please provide corrections or comments to address shown on home page of USBR Guide Specifications intranet site: intra.usbr.gov/guidespecs

SECTION 03 81 19
CONCRETE CRACK HEALER AND PENETRATING SEALER

PART 1 GENERAL

1.01 MEASUREMENT AND PAYMENT

A. Concrete Crack Healer and Penetrating Sealer:

1. Measurement: Area treated.
2. Payment: Square foot price offered in Price Schedule.

1.02 REFERENCE STANDARDS

A. ASTM International (ASTM)

1.	ASTM C881/C881M-14	Epoxy-Resin-Base Bonding Systems for Concrete
2.	ASTM C882/C882M-13a	Bond Strength of Epoxy-Resin Systems Used With Concrete By Slant Shear
3.	ASTM D93-15	Flash Point by Pensky-Martens Closed Cup Tester
4.	ASTM D638-14	Tensile Properties of Plastics
5.	ASTM D1084-08	Viscosity of Adhesives
6.	ASTM D1475-13	Density of Liquid Coatings, Inks, and Related Products
7.	ASTM D2369-10(2015)	Volatile Content of Coatings
8.	ASTM D3278-96(2011)	Flash Point of Liquids by Small Scale Closed-Cup Apparatus
9.	ASTM D4258-05(2012)	Surface Cleaning Concrete for Coating
10.	ASTM D4263-83(2012)	Indicating Moisture in Concrete by the Plastic Sheet Method

1.03 SUBMITTALS

A. Submit the following in accordance with Section 01 33 00 - Submittals.

B. RSN 03 81 19-1, Approval Data:

1. Certification from manufacturer that product is suitable for the intended application.
2. The manufacturer's current product data sheets.

3. [1][Data sheet(s) for broadcast sand].
4. Independent testing laboratory certification that the materials meet required specifications.
5. Manufacturer dates for polymer materials, lot numbers, and expiration date of each lot number.
6. Table with likely cure time in minutes for allowable ambient temperature ranges, in increments of 10 degrees F.

C. RSN 03 81 19-2, Qualifications:

1. Applicator.
   a. Relevant experience level of the site supervisor. No substitution allowed without resubmittal and approval.
   b. Applicator's key personnel (superintendent, assistant, and field installers).
2. Manufacture's technical representative.

D. RSN 03 81 19-3, Work Plans:

1. Work plan for each concrete surface to be treated.
2. Estimated times for surface preparation and healer/sealer application.
3. Manufacturer's recommendations for:
   a. Surface preparation.
   b. Mixing.
   c. Healer/sealer application method and equipment.
4. [2]Sand broadcasting method.

E. RSN 03 81 19-4, Quality Control Plan:

1. Methods to:
   a. Ensure equipment calibration.
   b. Ensure properly mixed components. Tests to verify resin mixture.
   c. Measure daily temperate and humidity.
   d. Material storage.
   e. Measure concrete moisture content.

F. [3]RSN 03 81 19 -5, Daily Records:

---

[1] Include if sand will be broadcast onto surface.

[2] Include if sand will be broadcast on surface.

[3] Submit at the end of each working day.

1. At a minimum, document following:
    a. Mix ratios used in each mix.
    b. Treated area (ft^2).
    c. Temperature and humidity.
    d. Concrete repair details if performed
    e. Concrete moisture content just prior to application

1.04 QUALIFICATIONS

A. Manufacturer's Technical Representatives:
1. Approved by manufacturer for services to be provided.
2. Familiar with installation and testing of product on a similar or larger size project.

B. Applicator:
1. Minimum of 10 similar field applications using a healer/sealer system for rehabilitation of concrete over the last 5 years.
2. Installation and design projects, contact names and phone numbers.

C. Superintendent, assistant, and laborers/field installers: Minimum 3 years' experience with similar repair projects.

1.05 DELIVERY, STORAGE AND HANDLING

A. Store sufficient material on-site to perform entire application prior to field preparation.

B. Deliver and store materials in manufacturer's original unopened packaging with labels and seals intact, in accordance with manufacturers' and or suppliers' requirements.

C. Keep storage space clean and dry.

D. Maintain the temperature of the storage space per the manufacturer's recommendations. Record temperatures using a high-low thermometer. Make available to COR upon request.

1.06 ENVIRONMENTAL CONDITIONS

A. Apply in accordance with following restrictions or in accordance with the manufacturer's instructions whichever is more stringent.
1. Apply on dry surfaces.
2. Do not apply if it has rained with in the past 24 hours or rain is expected within the next 8 hours.

3. Concrete moisture content: Not to exceed 4.5 percent when measured by an electronic meter.
4. Do not start application if temperature is expected to go below 50 degrees F before healer/sealer cured.

PART 2 PRODUCTS

2.01 ACCESSORIES

A. Electronic moisture meter: Prior to use, compare to moisture content measured by ASTM D 4263

2.02 MATERIALS

A. Concrete healer/sealer: formulated to seal small cracks in concrete surfaces.

B. HMWM: [_][4], or equal meeting the material properties of Table 03 81 19A – Material Properties.

C. Epoxy polymer: [_][5], or equal meeting the material properties of Table 03 81 19– Material Properties.

Table 03 81 19A - Material Properties

Material	Property Tested	Test Procedure	Acceptable Test Result
HMWM	Viscosity	ASTM D 1084	10 – 25 cps
	Specific Gravity	ASTM D1475	0.90 minimum @ 77 degrees F
	Tensile Elongation	ASTM D 638	30 Percent Minimum
	Odor	Manufacture Data Sheet	Low
	Vapor Pressure	ASTM D 638	0.02 psi @ 77 degrees F maximum
	Flash Point	ASTM D 93	175 degrees F minimum
	Solids Content	Manufacture Data Sheet	100 percent

[4] Insert specific HMWM. Contact CGSL for product information. Values in table for example only.

[5] Insert specific Epoxy polymer. Contact CGSL for product information. Values in table for example only.

Table 03 81 19A - Material Properties

Material	Property Tested	Test Procedure	Acceptable Test Result
	Bulk Cure	Manufacture Data Sheet	Less than 3 hours @ 73 degrees F
	Surface Cure	Manufacture Data Sheet	Less than 8 hours @ 73 degrees F Less than 24 hours at application temperature
	Gel Time	Manufacture Data Sheet	25-75 minutes at application temperature
	Percent Volatile	ASTM D 2369	30 percent maximum
Epoxy Polymer	Viscosity	ASTM D 2393	90 cps or less
	Tensile Elongation	ASTM D 638	30 percent minimum
	Tensile Strength	ASTM C 638	1500 psi minimum
	Flash Point	ASTM D 3278	175 degrees F minimum
	Solids Content	ASTM C 882	100 percent
	Pot Life	Manufacturer Data Sheet	20 to 60 min.
	Gel Time	ASTM C 881	20 to 30 minutes

D. Sand:

1. Clean silica sand.
2. Less than 0.5 percent moisture
3. Gradation: Refer to Table 03 81 19B - Sand Gradation

Table 03 81 19B - Sand Gradation

Sieve Size	Percent Passing
No. 8	100 percent
No. 16	80-100 percent
No. 50	0-72 percent

4. Or as approved by the healer/sealer manufacturer.

PART 3 EXECUTION

3.01 MANUFACTURER'S TECHNICAL REPRESENTATIVE

A. On-site during surface preparation and application to initial structure. Present as needed for remaining structures.

B. Instruct proper mixing, application technique, safety precautions, traffic opening time, and environmental requirements.

C. Approve products immediately before usage.

3.02 EQUIPMENT

A. Use only approved equipment.

B. Calibrated and maintained to assure constituent proportions.

3.03 SURFACE PREPARATION

A. Clean, prepare, treat and dry substrate according to manufacturer's written instructions, as listed below and per ASTM D 4258, whichever is more stringent.

B. Repair damaged or deteriorated concrete surfaces according to Section [6][{03 81 14 - Concrete Repair}{03 81 15 - Polymer Concrete Surface Repair}].

C. Use contained shotblasting, wet sandblasting, or water blasting to remove weathered, weakened or damaged concrete surfaces.

1. If water blasting, use pressure sufficiently high to prepare surface. Pressures up to 15,000 psi may be necessary.
2. Remove materials that weaken the bond between remaining concrete and healer/sealer material.

D. Immediately prior to application of healer/sealer, clean surfaces and cracks with oil free compressed air.

1. 100 psi minimum.
2. Direct air with nozzle into cracks.

E. Block off adjoining surfaces not receiving healer/sealer to prevent spillage affecting other construction.

[6] Select appropriate section for concrete repair. Contact CGSL for appropriate section.

F. Seal the underside of concrete surfaces, as needed, with a patching material to prevent leakage of the healer/sealer that might damage equipment or areas under the surface.

G. COR will approve final surface profile and preparation.

3.04 INSTALLATION

A. According to the approved work plan and manufacturer's instructions:

1. Mix components at correct speed.
2. Batch size.
3. Apply healer/sealer system.
4. Coverage rate.
5. Spray equipment: Airless.
6. Time limits.

B. Completely cover or flood area.

1. Sweep, squeegee, pour or spray area, allowing material to flow into cracks.
2. Repeat as necessary to fill cracks.

C. Do not use healer/sealer showing an increase in viscosity.

D. If healer/sealer does not penetrate surface of concrete, remove sealer, prepare surface and reapply.

E. [7][Broadcast sand to refusal within time limits specified by manufacturer after application of healer/sealer.

1. Usually within 15 to 20 minutes after final healer/sealer application
2. Remove excess sand within 24 hours after curing
3. [8][Repeat application of healer/sealer and sand to achieve desired thickness of treatment or as approved by COR.]
4. If broadcast sand did not adhere properly to the deck, reapply healer/sealer and re-broadcast sand as approved by COR. .]

3.05 CLEANING

A. Remove excess healer/sealer, [9][sand], and soiling from adjacent surfaces as approved by COR.

---

[7] Include if broadcast sand will be used.

[8] For repairs with broadcast sand, a minimum of 2 applications is usually performed.

[9] Include if broadcast sand will be used.

END OF SECTION

SECTION 09 91 11
PAINTING FOR CONCRETE

GUIDE SPECIFICATION
DEPARTMENT OF THE INTERIOR - BUREAU OF RECLAMATION

WARNING

Users of this guide specification should have expertise in the protective coatings field. This field is undergoing significant changes due to emerging technologies and environmental regulations that affect protective coatings formulation and performance. Reclamation has experienced unsuitable coating applications when users without adequate coating knowledge selected inappropriate materials. The Materials and Corrosion Laboratory, D-8540, in the Technical Service Center prepared this guide specification and is available to prepare or assist in preparing project specifications for coatings.

REVISIONS

Reference Standards Checked/Updated: 8/22/15

Content Revisions:

Editorial/Format Revisions:

Template: CSI_15a.dotx

NOTES

1. Use for the following substrate types: New and aged concrete.

2. Use on cementitious materials with surface tensile strength of 200 psi, minimum.

3. Project to test surface tensile strength after surface preparation methods listed herein and prior to commencement of work to estimate coating adhesion strength to the substrate.

Please provide corrections or comments to address shown on home page of USBR Guide Specifications intranet site: intra.usbr.gov/guidespecs

SECTION 09 91 11
PAINTING FOR CONCRETE

PART 1 GENERAL

1.01 COST

A. [1][Include cost in other items of price offered in the Price Schedule for items of work requiring coating.]

B. [2][Include cost in lump-sum price offered in the Price Schedule for [3]{ ____ }.]

1.02 REFERENCE STANDARDS

A. ASTM International (ASTM)

1.	ASTM C 920-14a	Elastomeric Joint Sealants
2.	ASTM D 4138-07a(2013)	Measurement of Dru Film Thickness of Protective Coatings by Destructive, Cross Section Means
3.	ASTM D 4259-88(2012)	Abrading Concrete
4.	ASTM D 4263-83(2012)	Indicting Moisture in Concrete by the Plastic Sheet Method
5.	ASTM D 4285-83(2012)	Indicating Oil and Moisture in Compressed Air
6.	ASTM D 4414-95(2013)	Measurement of Wet Film Thickness by Notch Gages
7.	ASTM D 6132-13	Nondestructive Measurement of Dry Film Thickness of Applied Organic Coatings Over Concrete Using an Ultrasonic Gage
8.	ASTM F 1869-11	Measuring Moisture Vapor Emission Rate of Concrete Subfloor Using Anhydrous Calcium Chloride

B. Federal Standards (Fed Std)

1.	Fed Std 595B-89	Colors Used in Government Procurement

C. The Society for Protective Coatings (SSPC)/NACE International (NACE)

1.	SSPC-AB1-15	Mineral and Slag Abrasives

---

1 Specify cost of coating work to be included.

2 Specify cost of coating work in one bid item.

3 Specify item or applicable items.

2.	SSPC-AB2-15	Cleanliness of Recycled Ferrous Metallic Abrasives
3.	SSPC-AB3-04	Newly Manufactured or Re-Manufactured Steel Abrasives
4.	SSPC-PA2-15	Measurement of Dry Paint Thickness with Magnetic Gages
5.	SSPC-QP1-12	Evaluating Painting Contractors (Field Application to Complex Industrial Structures)
6.	SSPC-QP3-10	Evaluating the Qualification of Shop Painting Contractors
7.	SSPC-SP13/NACE 6-04	Surface Preparation of Concrete

D. United States Bureau of Reclamation (USBR)

1.	USBR M-47	Standard Specifications for Repair of Concrete, August 2015 (Part 2, Appendix 1 of "Guide to Concrete Repair" available at http://www.usbr.gov/ (insert URL _____)

1.03 SUBMITTALS

A. Submit the following in accordance with Section 01 33 00 - Submittals.

1. Include following information with each set of data or certification:
   a. Applicable tabulation number from Coating Tabulations.
   b. Identification of items to be coated, including sub-letter and sub-number listed in Coating Tabulations.

B. RSN 09 91 11-1, Approval Data:

1. For each coating material:
   a. Manufacturer's product data, application, and SDS sheets
   b. Include:
      1) Supplier's name, address, and phone number.
      2) Manufacturer's designated product name.
2. [4][Paint Chip Samples:
   a. Color chip samples approximately 4 by 6 inch.
   b. Label each sample. Include manufacturer's designated product name; color; and gloss.

C. RSN 09 91 11-2, Final Approval Data:

[4] Include when matching existing color and gloss.

1. For each coating material:
   a. Purchase orders. Include:
      1) Supplier's name, address, and phone number.
      2) Purchase order number and date.
      3) Manufacturer's designated product name.
      4) Batch number(s) for each material, except thinners.
      5) Quantities ordered for each material, except thinners.

D. RSN 09 91 11-3, Certifications:
   1. [5][Current SSPC-QP1 certification for field application to complex structures.]
   2. [6][Current SSPC-QP3 certification shop application.]
   3. [7][Manufacturer's certification that materials certified by a Qualified Products List (QPL) meet specified requirements.]
   4. [8][National Sanitation Foundation (NSF) 61 certification that materials meet specified requirements for coating systems in-contact with potable water.]

E. RSN 09 91 11-4, Documentation:
   1. Applicator's qualifications by training or experience for each coating. For experience include:
      a. 3 recent jobs using comparable materials under similar conditions.
      b. Owners contact information of 3 recent jobs.

F. RSN 09 91 11-5, Contractor Quality Testing Data for "Shop or Field Applied" Coatings (not required for a manufacturer's standard coating systems):
   1. Date of work.
   2. Description of areas and work performed.
   3. Surface preparation.
   4. Surface cleanliness/ profile.

---

[5] Specify to pre-qualify painting contractor. Note: Number of qualified contractors in vicinity of jobsite may limit competition. Check list of qualified contractors on SSPC website www.sspc.org. Delete if number of potential contractors/subcontractors is insufficient to provide adequate competition.

[6] Specify to pre-qualify painting contractor. Note: Number of qualified contractors in vicinity of jobsite may limit competition. Check list of qualified contractors on SSPC website www.sspc.org. Delete if number of potential contractors/subcontractors is insufficient to provide adequate competition.

[7] Specify for Federal and Military coating specifications if applicable (see Coating Tabulations and Coating Categories).

[8] Specify for coating systems in-contact with potable water.

5. Ambient conditions.

6. Dry film thickness.

G. "Equal" Products:

1. List of projects (not less than three) where material has been successfully used in applications similar to this project. Include:

   a. Project name and location.

   b. Type of structure.

   c. Owner's name, address, and telephone number.

   d. Application dates.

2. Manufacturer's certification substitute coating material meets specified requirements. Include:

   1) Manufacturer's name, address, and phone number.

   2) Batch number(s) for each material, except thinners.

   3) Signature of manufacturer's technical representative and date of signature.

   b. Certified test reports that demonstrates substitute material meets or exceeds specified coating category requirements for physical and performance characteristics from each of following:

   1) Coating manufacturer.

   2) Independent laboratory.

1.04 QUALIFICATIONS

A. Coating applicators qualifications:

1. Qualified to apply specified coating materials by one of following:

   a. Successfully completed training in application of coating materials similar to materials and conditions specified.

   b. Skilled and experienced in application of coating materials similar to materials and conditions specified.

B. [9][Manufacturer's field representative:

1. Procure services of manufacturer's technical representative for coating material(s) listed in Coating Tabulation No.[10] {__} to comply with manufacturer's specification instructions for following:

---

[9] Specify coating manufacturer technical representative is required to be on the jobsite to supervise surface preparation and application of special materials, i.e. cavitation resistant.

[10] Specify tabulation listing special coating material.

a. Training.

b. Substrate surface preparation requirements.

c. Application requirements.]

C. Compliance Criteria for Coating Materials:

1. Material is of same composition and formulation to meet physical and performance test results for one of following:

a. Submitted batch or previously tested batch materials complies with these specifications.

b. Submitted batch materials are unchanged from previously tested batch materials that comply with manufacturer's quality control (QC) and quality assurance (QA) programs.

c. Submitted batch materials complies with manufacturer's quality control (QC) and quality assurance (QA) programs as listed on product data and application sheets.

1.05 DELIVERY, STORAGE, HANDLING

A. Deliver materials to jobsite in original, undamaged, unopened containers labeled with manufacturer's name, designated product name, batch number, date of manufacture, and any special instructions.

B. Deliver materials in containers not larger than 5 gallons as packaged by manufacturer unless suitable equipment is provided at jobsite to handle and thoroughly mix materials in larger containers.

C. Store materials in well ventilated area.

D. Do not expose to direct sunlight during storage.

E. Comply with manufacturer's storage instructions.

F. Do not use coating material which has exceeded manufacturer's specified storage stability period (shelf life).

1.06 ENVIRONMENTAL REQUIREMENTS

A. Comply with the most restrictive requirements of the coating manufacturer's and specifications.

B. Do not apply coatings:

1. Substrate surface temperature less than 5 degrees Fahrenheit above dewpoint.

2. Air and substrate surface temperature less than 50 degrees Fahrenheit and not to exceed manufacturer's recommended maximum temperature limit or 95 degrees Fahrenheit.

3. Humidity outside of manufacturer's recommended range.

C. Do not perform surface preparation or apply coatings when environmental conditions are not expected to meet specified requirements during surface preparation, coating application, and curing period.

D. Maintain environmental conditions to meet specified requirements during coating application and curing period. Provide heat and dehumidification required to maintain temperature and humidity conditions.

PART 2 PRODUCTS

2.01 MATERIALS

A. General:

1. Compliance criteria for coating materials:

a. Material is of same composition and formulation to meet physical and performance test results for one of following:

1) Submitted batch or previously tested batch materials complies with these specifications.

2) Submitted batch materials are unchanged from previously tested batch materials that comply with manufacturer's quality control (QC) and quality assurance (QA) programs.

3) Submitted batch materials complies with manufacturer's quality control (QC) and quality assurance (QA) programs as listed on product data and application sheets.

2. Materials required by these specifications and not listed in Coating Categories are subject to certification and testing in accordance with this Section.

3. Provide compatible products of same manufacturer for coating system components.

B. Abrasives:

1. Mineral and slag abrasives: SSPC-AB1, type I (natural minerals) and type II (slags), class A, except flint minerals are not permitted.

2. Ferrous metallic abrasives:

a. SSPC-AB2 for recycled cleanliness.

1) Screen and air wash abrasive recycled at the job site to remove dirt and fines.

2) Add new abrasive so combined new and recycled abrasive mixture meets specified abrasive requirements for moisture, friability, silica, anchor pattern, and oil content.

3) Do not recycle abrasive with toxic or hazardous material.

4) Do not recycle nickel slag.

b. SSPC-AB3 class I (steel) or II (iron) for angular shaped grit.

3. Make every commercially available effort to render the hazardous waste stream non-hazardous. [11][Additive stabilizers for leachable toxic metal wastes are allowed, except elemental iron is not permitted.]

4. Do not exceed toxicity threshold limit for hazardous materials.

C. Coatings:

1. Specified in Coating Categories.

2. Apply only one coating category per option in Coating Tabulations.

3. Volatile Organic Compounds (VOC):

a. Do not to exceed maximum permitted by Federal, State, and local air pollution control regulations.

b. Do not exceed maximum content as supplied in container or by addition of thinner material.

4. Factory color or tint. Do not color or tint at jobsite.

5. Use thinners recommended by manufacturer for each coating material.

6. Use of accelerator products is not permitted unless approved by Contracting Officer.

D. Fillers and Caulks:

1. Flexible gaps or crevices:

a. Coating manufacturer's standard flexible filler or caulk material.

b. Caulk material: Meet or exceed ASTM C 920-08 type S or M, grade NS, class 25, suitable for water immersion service.

2. Nonflexible gaps or crevices: Coating manufacturer's standard filler or caulk material.

E. [12][Soluble Salt Removal:

[11] Specify for removal of paints containing toxic (heavy) metals in conjunction with Section 02 83 30, Removal and Disposal of Coatings Containing Heavy Metals.

1. Chlor-Rid as manufactured by Chlor-Rid International Inc., PO Box 908 Chandler AZ 85244, 480-821-0039, www.chlor-rid.com, or equal with following essential characteristics:
   a. Water soluble.
   b. Biodegradable.
   c. Zero volatile organic compounds.
2. Deionized Water

PART 3 EXECUTION

3.01 PROTECTION

A. Protect adjacent items or from contamination and damage during cleaning and coating operations.
   1. Includes surfaces and equipment in physical contact with areas being cleaned or coated.
   2. Protect from abrasive blast particles and airborne coating particles.
   3. Prevent damage from bumping or striking with foreign objects.

B. Protect newly coated surfaces until coating is thoroughly dry or as determined by coating manufacturer's instructions.

3.02 SURFACE REPAIR

A. Repair contractor damaged or contaminated surfaces as determined by COR.
   1. Repair damaged surfaces to original condition and appearance.
   2. Before coating damaged coated surfaces, re-clean exposed surface and apply coating materials.

3.03 SURFACE PREPARATION

A. Curing: Cure at least 30 days before painting, except concrete slab on grade, which shall be allowed to cure 90 days before painting. Before coating application, repair cementitious defects greater than 3/4-inch in depth by one of following:
   1. [13][In accordance Section _____ Repair of Concrete.
   2. In accordance with USBR M47.
   3. In accordance with manufacturer's product instructions.]

---

[12] Specify for surfaces contaminated with soluble salts

[13] Specify repair procedure.

B. Remove dirt, dust, grease, oil, laitance, efflorescence, form oil, and curing compounds.

1. Dirt, Grease, and Oil:

a. Wash new and existing uncoated surfaces with a solution composed of 1/2 cup trisodium phosphate, 1/4 cup household detergent, and 4 quarts of warm water.

b. Then rinse thoroughly with fresh water.

c. Wash existing coated surfaces with a suitable detergent and rinse thoroughly.

d. For large areas, water blasting may be used.

2. [14][Fungus, mold, and mildew by one of following:

a. Wash brush affected area with solution of 5 ounces of trisodium phosphate, 3 ounces of household detergent, 1.25 percent sodium hypochlorite, and 3 quarts of warm potable water. After 24 hours, thoroughly flush with potable water. Repeat process if growth returns.

b. Use commercial products formulated and suitable for removal. Follow manufacturer's instructions.

3. Efflorescence:

a. Scrape or wire brush followed by washing with a 5 to 10 percent by weight aqueous solution of hydrochloric (muriatic) acid.

b. Do not allow acid to remain on the surface for more than five minutes before rinsing with fresh water.

c. Do not acid clean more than 4 square feet of surface, per workman, at one time.

C. Specific surface preparation methods:

1. [15][See Coating Tabulations:

2. Method T: SSPC-SP13/NACE 6, except as specified:

a. Section 4.3.3: Fractures and micro-cracks caused by impact tools are to be repaired in accordance with ASTM D 4259.

b. Do not use:

1) Section 4.3.3: Scabbling impact tool.

2) Section 4.4: Chemical surface preparation.

3) Section 4.5: Flame (Thermal) cleaning and blasting.

c. Paint and Loose Particles: Remove by wire brushing.

---

[14] Specify for surfaces with fungus, mold, and mildew growth.

[15] Specify specific surface preparation method(s) listed in Coating Tabulations(s).

3. Manufacturer's instructions.

D. Surface profile:

1. Prepare in accordance with manufacturer's instructions for cementitious materials and service environment.

2. Where manufacturer's instructions do not specify a surface profile, use on of the following:

a. Prepare surfaces to appearance of medium (100) abrasive paper, minimum or:

b. Atmospheric Service Environments: 1 mil or greater angular profile and less than specified millage of first applied coat.

E. Cosmetic Repair of Minor Defects: Repair or fill mortar joints and minor defects, including but not limited to spalls, in accordance with manufacturer's recommendations and prior to coating application.

F. After surface preparation, repair following surface irregularities:

1. Air pockets (bugholes): Greater than 1/8-inch in diameter by adhesive epoxy or manufacturer's repair compound filler.

2. Protrusions, fins, or bulges: Grind down by SSPC-SP13/NACE 6 surface preparation methods to 1/16-inch or less of surrounding surface.

3. Cracks: Use material compatible with manufacturer's coating material listed in Coating Tabulations.

G. Prepare surface free of moisture, frost, and ice before coating application.

H. Concrete moisture content:

1. Do not apply coatings to damp surfaces as determined by ASTM D 4263 and/or to horizontal surfaces that exceed 3 pounds of moisture per 1000 square feet in 24 hours as determined by ASTM F 1869.

2. In all cases follow manufacturer's recommendations:

3. Test substrate surface for moisture content before applying coating.

4. Perform one test per 1,000 square feet, minimum.

5. Perform tests in accordance with moisture content inspection procedures specified and coating manufacturer allowable moisture content.

I. [16][Soluble salt for field coated surfaces:

1. Test for soluble salts or chloride specific ion after surface preparation.

[16] Specify if soluble salts are suspect (Note: use on relatively smooth surfaces because test sleeves will not adhere to rough surfaces).

2. Perform two tests per [17]{1,000} square feet, minimum.
3. Measure or chloride soluble salt ion on concrete substrate surfaces by one of procedures in SSPC-Guide 15.
4. Procedure to have lower threshold limit of 1 micrograms per square centimeter.
5. Acceptance Criteria:
   a. Atmospheric service exposure: Do not exceed 7 micrograms per square centimeter.
   b. Burial and immersion service exposure: Do not exceed 3 micrograms per square centimeter.

J. Re-clean or perform additional surface preparation of completed surfaces contaminated before coating application.

3.04 APPLICATION EQUIPMENT

A. Air compressor and spray application equipment:
1. Equip with pressure gauges and pressure regulators.
2. Equip with air supply lines free from oil and moisture. Keep lines free of oil and moisture during work.
3. Inspect air supply lines on air compressors for oil and moisture in accordance with ASTM D 4285.

3.05 COATING APPLICATION

A. In accordance with manufacturer's instructions.

B. Surfaces exposed to public view shall display a uniform texture and color matched appearance.

C. Apply to surfaces free of moisture as determined by sight or touch.

D. Apply an even film of uniform thickness which tightly bonds to substrate or previous coat.
1. Fill crevices and cover irregularities. Work coating materials into joints, crevices, and open spaces. Edges, corners, and crevices receive a film thickness equal to adjacent painted surfaces.
2. Apply each coat so dry film shall be of uniform thickness and free from runs, drops, ridges, waves, laps, brush marks, or other voids and variations in color, texture, and finish. Hiding shall be complete.

[17] Square footage may increase or decrease according to job requirements.

3. Touch up damaged coatings before applying subsequent coats. Interior areas shall be broom clean and dust free before and during the application of coating material.

E. Primer Coats:

1. Cover peaks of surface profile by specified dry film thickness.
2. Apply stripe coats to edges, corners, and similar surfaces.

F. Intermediate and Topcoats:

1. Apply number of coats and coating thickness specified in Coating Tabulations.
2. Apply within re-coat window recommended by manufacturer.
3. Tint intermediate coats with manufacturer's standard color to differentiate between coats.

3.06 CONTRACTOR FIELD QUALITY TESTING

A. [18][Wet Film Thickness (WFT) Testing:

1. Inspect wet film thickness immediately after application in accordance with ASTM D 4414.
2. Compensate for reduced thickness to achieve specified thickness in Coating Tabulations.

B. [19][Dry Film Thickness (DFT) Testing and Acceptance:

1. Inspect hardened coating system before exceeding re-coating interval:
   a. ASTM D 4138.
   b. ASTM D 6132.
2. Number of tests and numerical averaging
   a. ASTM D 4138: Average of 3 tests per 1,000 square feet.
   b. ASTM D 6132: In accordance with SSPC-PA2.
3. Acceptance Criteria:
   a. 80 percent of minimum specified thickness.
   b. 150 percent of maximum specified thickness.
4. Repair areas tested by destructive method.

---

18 Specify in-lieu-of dry film thickness testing.

19 (a) Specify in-lieu-of non-destructive wet film thickness testing. (b) Specify if Project has DFT measurement capability for Tooke gauge (ASTM D 4138-destructive testing) and/or ultrasonic gauge (ASTM D 6132) or rely on Contractor to provided measurements.

C. [20][Discontinuity (Holiday) Testing:

1. Burial and Immersion Exposure: Inspect nonconductive coating in accordance with ASTM D 4787.

   a. Use maximum test voltage for any DFT as recommended by coating manufacturer to prevent coating damage.

   b. Do not use detergent wetting solution.

   c. Inspection of coating systems with aluminum, graphite, or other conductive pigments is not required.

3.07 COATING REPAIR

A. Repair within minimum and maximum re-coat window time in accordance with coating manufacturer's recommendations and applicable Coating Tabulation.

B. Repair pinholes, holidays, laps, voids, and other defects.

Inspect repaired areas for compliance with specifications

3.08 [21]COATING TABULATIONS

Tabulation No. 70		
Items to be coated: a. Concrete surfaces at canal safety ladders.		
Coating materials	Number and thickness of coats	Surface preparation method
For concrete surfaces: Base coats: Meets: CID A-A-3120*, Type C, chlorinated rubber base, or commercial equal for continuous immersion service. Color and gloss: see color schedule	2 or more heavy coats. Follow manufacturer's instructions for dry or wet film thickness per coat.	T
* CID A-A-3120 is prepared by Federal Supply Service, 1941 Jefferson Davis Highway, Crystal Mall Building 4, Arlington VA 22202		

[20] Specify only if one of following requirements can be meet: 1) Instrument ground connection to exposed steel reinforcement or embedded steel at several connection points. 2) If ground connection is not available, a conductive underlayment will be required (applied to prepared surface prior to application of nonconductive coating).

[21] Delete Tabulations not applicable to project.

Tabulation No. 70

099CT_70.DOC

Tabulation No. 71		
Items to be coated: a. Damp-proofing or moisture vapor barrier of below grade concrete surfaces. b. c.		
Coating materials	Number and thickness of coats	Surface preparation method
For concrete surfaces: Base coats: No. 35, Exterior Bituminous Coating Color: Manufacturer's standard color	2 or more heavy base coats. Follow manufacturer's instructions for dry or wet film thickness per coat.	T
Approved Materials: 1. Materials from MPI – Master Painters Institute, APL – Approved Products List www.paintinfo.com or www.mpi.net. 2. The Society for Protective Coatings (SSPC)/NACE International (NACE) www.sspc.org		

099CT_71.DOC

Tabulation No. 72		
Items to be coated: a. Interior surfaces of septic tanks and lift station for sewage treatment systems. b. Distribution boxes for sewage treatment systems. c.		
Coating materials	Number and thickness of coats	Surface preparation method

Tabulation No. 72		
For concrete surfaces: Base coats: Category options: IE-2AA IE-2AB Color: Manufacturer's standard black	2 or more coats, apply at 8 to 10 mils DFT, per coat. Follow manufacturer's instructions for wet film thickness per coat to achieve a total system of 16-mil DFT, minimum.	T

099CT_72.DOC

Tabulation No. 74		
Items to be coated: a. Exposed surfaces of concrete. b.		
Coating materials Epoxy	Number and thickness of coats	Surface preparation method
For cementitious surfaces subject to atmospheric or immersion exposure but not direct sunlight where color topcoat is not required: Base coats: Category options: IE-1A1 IE-1C IE-1D	2 or more base coats. Apply at 8 to 10 mils DFT, per coat. Total system: 16-mil DFT, minimum	T Follow manufacturer's surface preparation and application instructions to apply subsequent coats.
Coating materials Epoxy/polyurethane	Number and thickness of coats	Surface preparation method

Tabulation No. 74		
For cementitious surfaces subject atmospheric exposure and direct sunlight where color topcoat is required: Base coats: Category options: IE-1A1 IE-1C IE-1D	2 or more base coats. Apply at 8 to 10 mils DFT, per coat. Total system: 16-mil DFT, minimum	T Follow manufacturer's surface preparation and application instructions to apply subsequent coats.
Finish coats: Category options: AE-1AT over IE-1A1 AE-1CT over IE-1C AE-1DT over IE-1D Color and gloss: see color schedule	1or more compatible manufacturer's finish coats. Apply at 3 to 4 mils DFT, per coat. Total system: 19-mil DFT, minimum	Follow manufacturer's surface preparation and application instructions to apply subsequent coats.

099CT_74.DOC

Tabulation No. 78		
Items to be coated: a. Dustproofing interior floor and vertical concrete surfaces. b. c.		
Coating materials Epoxy	Number and thickness of coats	Surface preparation method
For concrete surfaces: Base coats: Amber clear epoxy	Follow manufacturer's instructions for number of coats and thickness per coat.	T

Tabulation No. 78	
Approved Material: CC400EP Clear Epoxy Sealer as manufactured by Hilti North American, 5400 South 122nd East Avenue, Tulsa OK 74146, 918-252-6000, www.hilti.com; or equal with following essential characteristics:	
Composite:	
Two component, amber clear, water-based, polyimide epoxy	
Performance characteristics:	
Flexibility, ASTM D 522:	Passes, 1/8–inch mandrel bend
Impact resistance, ASTM D 2794:	50 inch-pounds, minimum

099CT_78.DOC

Tabulation No. 79		
Items to be coated: Warehouse concrete floor.		
Coating materials Epoxy	Number and thickness of coats	Surface preparation method
For concrete floor surfaces: Category: AES-1F Color: see color schedule	1 or more prime coats, apply at 6 to 8 mils DFT, per coat.	T
	2 or more intermediate coats, apply at 1/16-inch, per coat.	Follow manufacturer's surface preparation and application instructions to apply subsequent coats.
	1 or more topcoats, apply at 8 to 12 mils DFT, per coat. Total system: 1/8-inch, plus or minus 1/64-inch	

099CT_79.DOC

3.09 [22] COATING CATEGORIES

Category IE-2AA

Amercoat 78HB; as manufactured by:

PPG Protective & Marine Coatings, One PPG Place, Pittsburgh, Pennsylvania 15272, 412-434-3131, www.ppgamercoatus.ppgmc.com

or equal, having following essential characteristics:

COMPOSITION:

Self-priming, two component, amine-cured, coal-tar epoxy

Lead and chromate free.

PHYSICAL CHARACTERISTICS:

Solids by volume:	75 percent, minimum
VOC, as supplied:	1.9 pounds per gallon (228 grams per liter), maximum
Mix ratio - resin:hardener:	19:1
Mixed usable pot life at 50 degrees F:	8 hours, minimum
Ambient application temperature:	50 degrees F, minimum
Surface application temperature above dew point:	5 degrees F, minimum
Maximum DFT per coat:	16 mils
Recoat time at 50 degrees F:	72 hours, maximum
Full cure time before immersion at 50 degrees F and 50 percent humidity:	14 days, minimum
Application methods:	Brush, roller, or spray
Color/finish:	Black or dark red/flat

PERFORMANCE REQUIREMENTS:

Fresh/deionized water immersion test, ASTM D 870:	passes, 3,000 hour test with aerated water held at ambient temperature with no blisters evident on either scribed or unscribed sides.
Salt water immersion test, ASTM D 870; ASTM D 1141 formula A with no heavy	passes, 3,000 hour test with aerated water held at ambient temperature

[22] Delete categories not applicable to project.

metals:	with no blisters evident on either scribed or unscribed sides.
Abrasion resistance, ASTM D 4060, CS-17 wheel, 1,000 cycles, 1-kg load:	120 milligram loss or less
Flexibility, ASTM D 522, 180 degree bend over 1-inch mandrel:	passes
Pencil hardness, ASTM D 3363:	2B, minimum
Pulloff adhesion, ASTM D 4541, annex A2, type II tester:	500 psi or greater
Pulloff tape, ASTM D 3359:	4A or better
Cathodic disbondment, ASTM G 8:	passes 90 day test

099XC_IE2AA.DOC

Category IE-2AB

Use one of following:

Bitumastic 300M; as manufactured by: Carboline, 350 Hanley Industrial Court, St. Louis MO, 314-644-1000, www.carboline.com

Targuard; as manufactured by: Sherwin-Williams, 101 Prospect Avenue NW, Cleveland OH 44115, 216-566-2000, www.sherwin-williams.com

Hi-Build Tnemec-Tar, Series 46H-413; as manufactured by: Tnemec Company, 6800 Corporate Drive, Kansas City MO 64141, 800-863-6321, www.tnemec.com

or equal, having following essential characteristics:

COMPOSITION:

Self-priming, two component, polyamide, coal-tar epoxy

Lead and chromate free.

PHYSICAL CHARACTERISTICS:

Solids by volume:	72 percent, minimum
VOC, as supplied:	1.88 pounds per gallon (225 grams per liter), maximum
Mix ratio - resin:hardener:	Varies by manufacturer
Mixed usable pot life at 75 degrees F:	2 hours, minimum
Ambient application temperature:	50 degrees F, minimum
Substrate temperature above dew point:	5 degrees F, minimum
Maximum DFT per coat:	16 to20 mils, varies by manufacturer
Recoat time:	Varies by manufacturer
Full cure time before immersion at 70 degrees F and 50 percent humidity:	14 days, minimum
Application methods:	Brush, roller, or spray
Color/finish:	Black or dark red/flat, gloss, or semigloss; varies by manufacturer

PERFORMANCE REQUIREMENTS:

Fresh/deionized water immersion test, ASTM D 870:	passes, 3,000 hour test with aerated water held at ambient temperature with no blisters evident on either scribed or unscribed sides.
Salt water immersion test, ASTM D 870; ASTM D 1141 formula A with no heavy	passes, 3,000 hour test with aerated water held at ambient temperature

metals:	with no blisters evident on either scribed or unscribed sides.
Abrasion resistance, ASTM D 4060, CS-17 wheel, 1,000 cycles, 1-kg load:	120 milligram loss or less
Flexibility, ASTM D 522, 180 degree bend over 1-inch mandrel:	passes
Pencil hardness, ASTM D 3363:	2B, minimum
Pulloff adhesion, ASTM D 4541, annex A2, type II tester:	500 psi or greater
Pulloff tape, ASTM D 3359:	4A or better
Cathodic disbondment, ASTM G 8:	passes 90 day test

099XC_IE2AB.DOC

Category IE-1A1

Amerlock 400 or Amerlock 2; as manufactured by:

PPG Protective & Marine Coatings, One PPG Place, Pittsburgh, Pennsylvania 15272, 412-434-3131, www.ppgamercoatus.ppgmc.com

or equal, having following essential characteristics:

COMPOSITION:

Self-priming, two component, polyamide epoxy

Lead and chromate free.

PHYSICAL CHARACTERISTICS:

Solids by volume:	80 percent, minimum
VOC, as supplied:	Amerlock 400: 1.4 pounds per gallon (168 grams per liter), maximum Amerlock 2: 1.5 pounds per gallon (180 grams per liter), maximum
Mix ratio - resin:hardener:	1:1
Mixed usable pot life at 50 degrees F:	2 hours, minimum
Ambient application temperature:	50 degrees F, minimum
Surface application temperature above dew point:	5 degrees F, minimum
Maximum DFT per coat:	10 mils
Recoat time at 50 degrees F:	Amerlock 400: 3 months, maximum Amerlock 2: 1 month, maximum
Full cure time before immersion at 50 degrees F and 50 percent humidity:	14 days, minimum
Application methods:	Brush, roller, or spray
Color/finish:	Variety of colors/semigloss

PERFORMANCE REQUIREMENTS:

Fresh/deionized water immersion test, ASTM D 870:	passes, 3,000 hour test with aerated water held at ambient temperature with no blisters evident on either scribed or unscribed sides.
Salt water immersion test, ASTM D 870; ASTM D 1141 formula A with no heavy metals:	passes, 3,000 hour test with aerated water held at ambient temperature with no blisters evident on either

	scribed or unscribed sides.
Abrasion resistance, ASTM D 4060, CS-17 wheel, 1,000 cycles, 1-kg load:	100 milligram loss or less
Flexibility, ASTM D 522, 180 degree bend over ¼-inch mandrel:	passes
Pencil hardness, ASTM D 3363:	2B, minimum
Pulloff adhesion, ASTM D 4541, annex A2, type II tester:	500 psi or greater
Pulloff tape, ASTM D 3359:	4A or better
Cathodic disbondment, ASTM G 8:	passes 90 day test

099XC_IE1A1.DOC

Category IE-1C

Hi-Build Epoxoline II, Series N69 or V69; as manufactured by:

Tnemec Company, 6800 Corporate Drive, Kansas City MO 64141
800-863-6321, www.tnemec.com

or equal, having following essential characteristics:

COMPOSITION:

Self-priming, two component, polyamidoamine epoxy

Lead and chromate free.

PHYSICAL CHARACTERISTICS:

Solids by volume:	67 percent, minimum
VOC, as supplied:	N69: 2.29 lbs/gal (275 grams/liter) V69: 1.95 lbs/gal (234 grams/liter)
Mix ratio - resin:hardener:	1:1
Mixed usable pot life at 50 degrees F:	15 hours, minimum
Ambient application temperature:	50 degrees F, minimum
Surface application temperature above dew point:	5 degrees F, minimum
Maximum DFT per coat:	10 mils
Recoat time at 50 degrees F:	12 hours, minimum
Full cure time before immersion at 50 degrees F and 50 percent humidity:	12 days, minimum
Application methods:	Brush, roller, or spray
Color/finish:	Limited colors/semigloss

PERFORMANCE REQUIREMENTS:

Fresh/deionized water immersion test, ASTM D 870:	passes, 3,000 hour test with aerated water held at ambient temperature with no blisters evident on either scribed or unscribed sides.
Salt water immersion test, ASTM D 870; ASTM D 1141 formula A with no heavy metals:	passes, 3,000 hour test with aerated water held at ambient temperature with no blisters evident on either scribed or unscribed sides.
Abrasion resistance, ASTM D 4060, CS-17 wheel, 1,000 cycles, 1-kg load:	100 milligram loss or less

Flexibility, ASTM D 522, 180 degree bend over 1-inch mandrel:	passes
Pencil hardness, ASTM D 3363:	2B, minimum
Pulloff adhesion, ASTM D 4541, annex A2, type II tester:	500 psi or greater
Pulloff tape, ASTM D 3359:	4A or better
Cathodic disbondment, ASTM G 8:	passes 90 day test

099XC_IE1C.DOC

Category IE-1D

Bar-Rust 235; as manufactured by:

ICI Devoe Coatings, 4000 Dupont Circle, Louisville KY 40207
502-897-9861, www.devoecoatings.com

or equal, having following essential characteristics:

COMPOSITION:

Self-priming, two component, modified polyamide-amine epoxy

Lead and chromate free.

PHYSICAL CHARACTERISTICS:

Solids by volume:	68 percent, minimum
VOC, as supplied:	2.40 pounds per gallon (292 grams per liter), maximum
Mix ratio - resin:hardener:	4:1
Mixed usable pot life at 77 degrees F:	4.5 hours, minimum
Ambient application temperature:	50 degrees F, minimum
Surface application temperature above dew point:	5 degrees F, minimum
Maximum DFT per coat:	10 mils
Recoat time at 60 degrees F:	6 hours, minimum
Full cure time before immersion at 60 degrees F and 50 percent humidity:	14 days, minimum
Application methods:	Brush, roller, or spray
Color/finish:	Variety of colors, off-white/semigloss

PERFORMANCE REQUIREMENTS:

Fresh/deionized water immersion test, ASTM D 870:	passes, 3,000 hour test with aerated water held at ambient temperature with no blisters evident on either scribed or unscribed sides.
Salt water immersion test, ASTM D 870; ASTM D 1141 formula A with no heavy metals:	passes, 3,000 hour test with aerated water held at ambient temperature with no blisters evident on either scribed or unscribed sides.
Abrasion resistance, ASTM D 4060, CS-17 wheel, 1,000 cycles, 1-kg load:	100 milligram loss or less

Flexibility, ASTM D 522, 180 degree bend over 1-inch mandrel:	passes
Pencil hardness, ASTM D 3363:	3H, minimum
Pulloff adhesion, ASTM D 4541, annex A2, type II tester:	500 psi or greater
Pulloff tape, ASTM D 3359:	4A or better
Cathodic disbondment, ASTM G 8:	passes 90 day test

099XC_IE1D.DOC

Category AE-1AT

Amercoat 450HS; as manufactured by:

PPG Protective & Marine Coatings, One PPG Place, Pittsburgh, Pennsylvania 15272, 412-434-3131, www.ppgamercoatus.ppgmc.com

or equal, having following essential characteristics:

COMPOSITION:

Topcoat – Two-component, aliphatic polyurethane

Lead and chromate free.

PHYSICAL CHARACTERISTICS, PRIMER:

Solids by volume:	63 percent, minimum
VOC, as supplied:	2.4 pounds per gallon (287.5 grams per liter), maximum
Mix ratio - resin:hardener:	4:1
Mixed usable pot life at 50 degrees F:	6 hours, minimum
Ambient application temperature:	50 degrees F, minimum
Surface application temperature above dew point:	5 degrees F, minimum
Maximum DFT per coat:	3 mils
Recoat time at 50 degrees F and 50 percent humidity:	12 days, minimum
Application methods:	Brush, roller, or spray
Color/finish:	Variety of colors/gloss

PERFORMANCE REQUIREMENTS:

QUV accelerated weathering test, ASTM D 4587, ASTM G 154:	Passes 3,000 hour test with no blisters evident on either scribed or unscribed sides, or color difference ASTM D 2244.
Flexibility, ASTM D 522, 180 degree bend over 1-inch mandrel:	passes
Pencil hardness, ASTM D 3363:	2B, minimum
Pulloff adhesion, ASTM D 4541, annex A2, type II tester:	500 psi or greater
Pulloff tape, ASTM D 3359:	equal to 4A or better

099XC_AE1AT.DOC

Category AE-1CT

Endura-Shield II, Series 1074, gloss, or Series 1075, semigloss; as manufactured by:

Tnemec Company, 6800 Corporate Drive, Kansas City MO 64141
800-863-6321, www.tnemec.com

or equal, having following essential characteristics:

COMPOSITION:

Topcoat – Two-component, aliphatic acrylic, polyurethane

Lead and chromate free.

PHYSICAL CHARACTERISTICS, PRIMER:

Solids by volume:	68 percent, minimum
VOC, as supplied:	1.84 lbs/gal (220 grams/liter)
Mix ratio - resin:hardener:	8:1
Mixed usable pot life at 77 degrees F:	2 hours, maximum
Ambient application temperature:	50 degrees F, minimum
Surface application temperature above dew point:	5 degrees F, minimum
Maximum DFT per coat:	5 mils
Recoat time at 75 degrees:	8 hours, minimum
Application methods:	Brush, roller, or spray
Color/finish:	Variety of colors/gloss or semigloss

PERFORMANCE REQUIREMENTS:

QUV accelerated weathering test, ASTM D 4587, ASTM G 154:	Passes 3,000 hour test with no blisters evident on either scribed or unscribed sides, or color difference ASTM D 2244.
Flexibility, ASTM D 522, 180 degree bend over 1-inch mandrel:	passes
Pencil hardness, ASTM D 3363:	2B, minimum
Pulloff adhesion, ASTM D 4541, annex A2, type II tester:	500 psi or greater
Pulloff tape, ASTM D 3359:	equal to 4A or better

099XC_AE1CT.DOC

Category AE-1DT

Devthane 379 UVA as manufactured by:

ICI Devoe Coatings, 4000 Dupont Circle, Louisville KY 40207
502-897-9861, www.devoecoatings.com

or equal, having following essential characteristics:

COMPOSITION:

Topcoat – Two-component, aliphatic acrylic, urethane

Lead and chromate free.

PHYSICAL CHARACTERISTICS, Topcoat:

Solids by volume:	63 percent, minimum
VOC, as supplied:	2.6 pounds per gallon (311 grams per liter), maximum
Mix ratio - resin:hardener:	4:1
Mixed usable pot life at 77 degrees F:	4 hours, minimum
Ambient application temperature:	50 degrees F, minimum
Surface application temperature above dew point:	5 degrees F, minimum
Maximum DFT per coat:	3 mils
Recoat time at 60 degrees F:	6 hours, minimum
Application methods:	Brush, roller, or spray
Color/finish:	Variety of colors, white/gloss

PERFORMANCE REQUIREMENTS:

QUV accelerated weathering test, ASTM D 4587, ASTM G 154:	Passes 3,000 hour test with no blisters evident on either scribed or unscribed sides, or color difference ASTM D 2244.
Flexibility, ASTM D 522, 180 degree bend over 1-inch mandrel:	passes
Pencil hardness, ASTM D 3363:	2B, minimum
Pulloff adhesion, ASTM D 4541, annex A2, type II tester:	500 psi or greater
Pulloff tape, ASTM D 3359:	equal to 4A or better

099XC_AE1DT.DOC

Category AES-1F

Series 201 Epoxoline, primer; Series 221 Lami-Tread, double broadcast, intermediate coat; Series 280 Tneme-Glaze, topcoat; as manufactured by:

Tnemec Company, 6800 Corporate Drive, Kansas City MO 64141
800-863-6321, www.tnemec.com

or equal, having following essential characteristics:

COMPOSITION:

Primer – Two-component, polyamine epoxy

Intermediate coat – Two-component, aggregate-filled, polyamine, epoxy

Topcoat – Two-component, polyamine epoxy

Lead and chromate free.

PHYSICAL CHARACTERISTICS, PRIMER:

Solids by volume:	94 percent, minimum
Weight per gallon:	8.63 pounds per gallon, minimum
VOC, as supplied:	0.33 pounds per gallon (39 grams per liter), maximum
Optimum application temperature:	70 to 90 degrees F
Maximum DFT per coat:	8 mils, varies by manufacturer
Recoat time at 75 degrees F:	16 hours, maximum
Application methods:	Brush, roller, squeegee, or spray
Color:	Clear

PHYSICAL CHARACTERISTICS, INTERMEDIATE COAT:

Solids by volume mixed with aggregate:	95.5 percent, minimum
VOC, as supplied:	0.75 pounds per gallon (90 grams per liter), maximum
Optimum application temperature:	70 to 90 degrees F
Maximum DFT per coat:	1/16-inch
Recoat time at 75 degrees F:	24-hours, maximum
Application methods:	Roller, trowel, or squeegee
Color:	Medium gray, tile red, buff

PHYSICAL CHARACTERISTICS, TOPCOAT:

Solids by volume:	96 percent, minimum
VOC, as supplied:	0.34 pounds per gallon (41 grams per liter), maximum
Optimum application temperature:	70 to 90 degrees F

Maximum DFT per coat:	12 mils
Recoat time at 75 degrees F:	24-hours, maximum
Application methods:	Brush, roller, or spray
Color/finish:	Variety of colors/gloss
PERFORMANCE REQUIREMENTS:	
Abrasion resistance, ASTM D 4060, CS-17 wheel, 1,000 cycles, 1-kg load:	90 milligram loss or less
Pencil hardness, ASTM D 3363:	2H, minimum
Pulloff adhesion, ASTM D 4541, annex A2, type II tester:	500 psi or greater
	099XC_AES1F.DOC

3.10 [23][COLOR SCHEDULE]

A. Colors and glosses of finished coats:

1. Meet requirements of schedule _____ (Color Schedule) specified below.
2. Meet accurate match of color and gloss of specified coated surfaces.

B. [24][Color [25]{and gloss} to meet one or more of following:

1. Munsell Book of Color.
2. Fed Std 595B.
3. Manufacturer's standard color.]

C. [26][Match existing color and gloss in Tabulation No. __.]

D. [27][Gloss abbreviations:

1. G - Full Gloss.
2. SG - Semigloss.

---

23 Alternative to using Color Schedule: For limited items to receive a specific color, finished colors may be specified in Coating Tabulation by Munsell Color, Federal Standard 595B, or manufacturer's standard color and gloss.

24 Specify color references listed in Color Schedule.

25 Specify if gloss column is listed in Color Schedule table.

26 Specify to match an existing color and gloss.

27 Specify gloss types if listed in Color Schedule table.

3. ES - Eggshell.
4. L - Lusterless.
5. VF – Velvet flat.
6. SF – Satin flat.
7. F - Flat.]

E. Color schedule table:

1. Numbers listed in the "Tabulation No." column correspond to Items to be coated listed in Coating Tabulations.

Schedule ____. - Color Schedule.

Tabulation No.	[28][Item Surface]	Color	Color No.	[29][Gloss]
2	Concrete floor.	Gray	[30][16440]	G
3	Vertical concrete walls.	Gray	[31][7.5YR7/4]	SG

3.11 [32][COLOR SCHEDULE

A. Color and gloss of finished coats to be selected by CO with approval of coatings.]

END OF SECTION

[28] Specify item surface with exact wording listed in Coating Tabulation.

[29] Specify gloss column if specified gloss type is available for coating products.

[30] Example of Federal Standard 595B notation.

[31] Example of Munsell Color notation.

[32] Specify if color and gloss of finished coated items are to be selected after bid acceptance and include responsible code or office in RSN table.