REC-ERC-71-42

DRAFT TUBE SURGES

A Review of Present Knowledge and an Annotated Bibliography

H. T. Falvey
Engineering and Research Center
Bureau of Reclamation

December 1971

MS-230 (8-70)
Bureau of Reclamation

TECHNICAL REPORT STANDARD TITLE PAGE

1. REPORT NO. REC-ERC-71-42	2. GOVERNMENT ACCESSION NO.	3. RECIPIENT'S CATALOG NO.
4. TITLE AND SUBTITLE Draft Tube Surges—A Review of Present Knowledge and an Annotated Bibliography		5. REPORT DATE Dec 71
		6. PERFORMING ORGANIZATION CODE
7. AUTHOR(S) H. T. Falvey		8. PERFORMING ORGANIZATION REPORT NO. REC-ERC-71-42
9. PERFORMING ORGANIZATION NAME AND ADDRESS Engineering and Research Center Bureau of Reclamation Denver, Colorado 80225		10. WORK UNIT NO.
		11. CONTRACT OR GRANT NO.
12. SPONSORING AGENCY NAME AND ADDRESS Same		13. TYPE OF REPORT AND PERIOD COVERED
		14. SPONSORING AGENCY CODE

15. SUPPLEMENTARY NOTES

16. ABSTRACT

A literature survey and a review of material related to draft tube surges is presented. The literature survey consists of an annotated bibliography of 68 articles published between 1910 and 1970. The review is restricted to three major areas: experiments with elementary models, experiments with model and prototype turbines, and field expedients to reduce surging. Velocity distributions and surge frequencies are given special attention in the first two areas. Present knowledge is sufficient for predicting the order of magnitude of draft tube surge frequencies and relative surge amplitudes. Additional studies are needed to refine prediction methods and to extend their scope to include pumps and pump-turbines. Model testing at full prototype heads is apparently not required to investigate draft tube surging. Has 68 references.

17. KEY WORDS AND DOCUMENT ANALYSIS

a. *DESCRIPTORS*-- / *draft tubes/ * turbines/ *surges/ *hydroelectric powerplants/ hydraulic machinery/ fluid mechanics/ unsteady flow/ laboratory tests/ model tests/ fluid flow/ non-uniform flow/ vortices/ bibliographies/ annotations/ velocity distribution/ amplitude/ air admission/ frequency

b. *IDENTIFIERS*-- /hydrodynamic stability

c. *COSATI Field/Group* 13G

18. DISTRIBUTION STATEMENT *Available from the National Technical Information Service, Operations Division, Springfield, Virginia 22151.*	19. SECURITY CLASS (THIS REPORT) *UNCLASSIFIED*	21. NO. OF PAGES 25
	20. SECURITY CLASS (THIS PAGE) *UNCLASSIFIED*	22. PRICE $3.00

REC-ERC-71-42

DRAFT TUBE SURGES

A Review of Present Knowledge and an Annotated Bibliography

by

H. T. Falvey

December 1971

Hydraulics Branch
Division of General Research
Engineering and Research Center
Denver, Colorado

UNITED STATES DEPARTMENT OF THE INTERIOR
Rogers C. B. Morton
Secretary

*

BUREAU OF RECLAMATION
Ellis L. Armstrong
Commissioner

CONTENTS

LIST OF FIGURES

APPLICATIONS

The results of this study are encouraging. Sufficient knowledge is presently available to permit the analytic prediction of draft tube surge frequencies and relative amplitudes knowing the wicket gate geometry and turbine characteristics. Additional studies are needed to refine existing surge prediction methods and to extend their scope to include pumps and pump-turbines. Testing models at the full prototype head does not appear to be necessary to investigate surge characteristics of a turbine. The quantities presented in the section "Field Expedients to Reduce Surging" represent observations of specific installations. The absolute value of these quantities will undoubtedly vary from installation to installation. However, the order of magnitude of the quantities can probably be used for estimations.

INTRODUCTION

Draft tube surge is the term applied to a hydrodynamic instability which forms in draft tubes containing swirling flow. The instability is present in almost every reaction-type installation when the unit is not operating near maximum efficiency. It has also been observed with Kaplan-type (propeller) runners.

Flow visulization studies with model turbines have shown that the instability or surging is intimately connected with the presence of a corkscrew or spiral-shaped vortex which rotates around the axis of the conduit, Figure 1. The surging exists with the vortex core filled with air, water, or water vapor. However, when the vortex core is filled with air or water vapor, the amplitude of the surges is reduced. A vortex core which forms coaxially with the conduit produces no surges. Apparently, the spiral vortex represents a flow configuration conducive to self-excited oscillations.

In hydroelectric plants, the surges are responsible for many undesirable operating characteristics which may occur individually or in combination. These undesirable characteristics are: noise, vibrations, variations in power output, vertical movement of the runner and shaft, and pressure pulsations in the penstock. The existence of so many different adverse characteristics of the draft tube surge, as well as inconsistencies in the character of the surge between apparently identical units, has led to much confusion in analyzing the problem.

This report presents a compilation and analysis of known facts and observations about the draft tube surges in an effort to explain some of the inconsistencies. In addition, an annotated bibliography is included to provide the reader with additional sources of information.

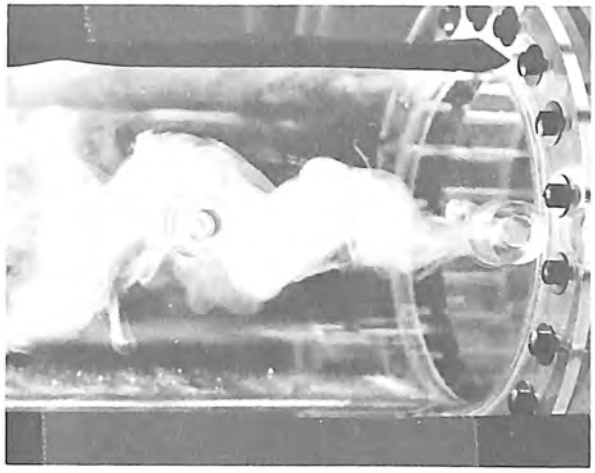

Figure 1. Spiral vortex in a cylindrical tube. Flow is from right to left.

In conducting the library study, any material pertaining to rotational flow in a conduit was gathered. Although the sources were often very remote from the field of hydraulic machinery, their inclusion in the bibliography adds insight into the nature of the problem.

EXPERIMENTAL OBSERVATIONS WITH SIMPLIFIED MODELS

General

In a normal Francis-type turbine installation, the analysis of the flow beneath the runner is made extremely complex by the effects of the bend in the draft tube, the conical diffuser section of the draft tube, and the velocity distribution imparted by the runner itself. Some authors have suggested that the flow distribution in the spiral case or distributor may also be a significant parameter. In view of the multitude of factors to be considered, investigations with simplified models is clearly indicated. With a simplified model, the effect of each factor can be investigated separately and its contribution to surging evaluated.

Tests of simplified models were made with either water or air flow in cylindrical, convergent, and divergent pipe sections. Swirl was imparted through rotation of upstream pipe sections, spiral chambers, vanes, and rotating perforated disks placed perpendicular to the

axis of the pipe. Axial, radial, and tangental velocity distributions were measured for conditions just preceding the transition into the spiral vortex, as well as for conditions with considerable swirl. In addition, frequency characteristics for various flow rates were observed.

Velocity Distribution

The velocity distribution in the conduits was found to depend upon both a characteristic Reynolds number and the amount of swirl in the flow. Six flow regimes with swirling flow in divergent conduits were identified (Harvey, So, Talbot), Figure 2.

A systematic study of the velocity distribution for each one of the flow regimes has not been conducted. However, some data have been published for certain specific cases. For instance, axial and tangential velocity distributions for Regimes 4 and 5 type flow have been measured. These measurements typically indicate a reduced axial velocity on the axis of the tube. The tangential velocity distribution with Regime 4 can be approximated with an equation of the type defining a viscous vortex,

$$V_t = \frac{AR}{r} \left(1 - e^{\frac{Br^2}{R^2}}\right) .$$

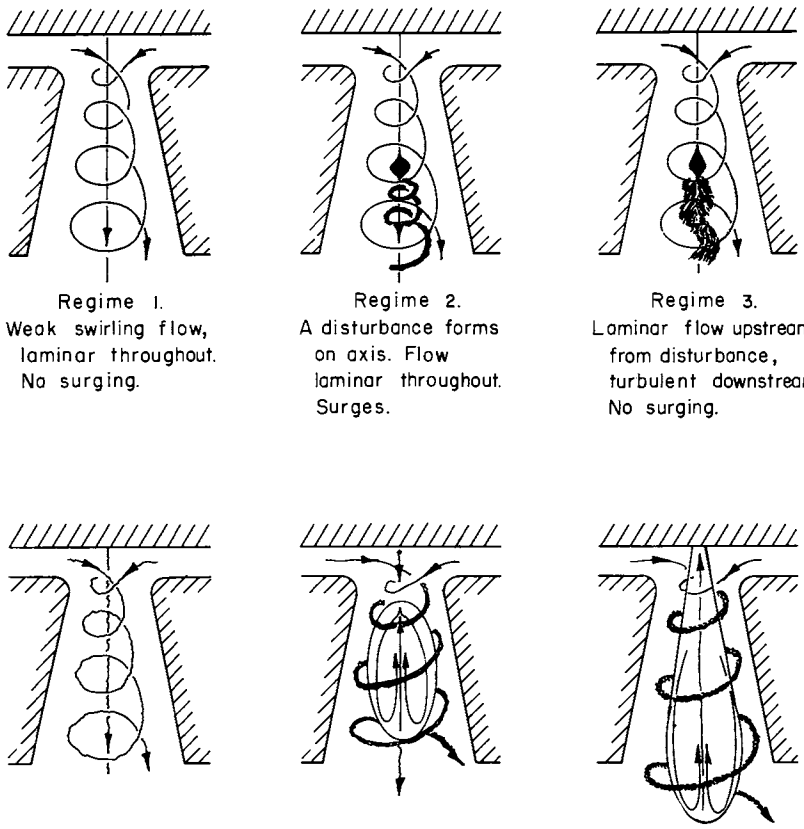

Regime 1. Weak swirling flow, laminar throughout. No surging.

Regime 2. A disturbance forms on axis. Flow laminar throughout. Surges.

Regime 3. Laminar flow upstream from disturbance, turbulent downstream. No surging.

Regime 4. Turbulent throughout. No surging.

Regime 5. Stall on center line of conduit. Turbulent throughout. Surge irregular.

Regime 6. Stall extends throughout conduit. Flow entirely turbulent. Surge is regular when stall region is small, irregular when stall region is large.

Figure 2. Flow regimes with swirling flow in divergent conduits.

Tests were also made with air in straight cylindrical conduits (Harvey). A series of vanes were used to induce spiral flow. The swirl angle upstream from the disturbance was measured directly with a stream of smoke. The author indicated that the flow was laminar upstream from the disturbance and turbulent downstream which is indicative of Regime 3 type flow. However, upstream flow conditions at which the tests were conducted give a Reynolds number of about 9 x 10^3 and thus indicate the inception of Regime 5 type flow. Tests have shown that moderate rotation or swirl has a dampening effect upon turbulence which could explain the laminar appearance of the flow even though it is in the turbulent range (i.e., Reynolds numbers greater than about 2 x 10^3). A viscous vortex equation could not be made to fit the swirl angle measurements exactly. This lack of fit is probably caused by a nonuniform axial velocity distribution across the cross section.

The rope-like vortex which precesses around the cell of reversed flow with Regime 5 or 6 type flows produces periodic variations in the velocity measurements. In general, the manner in which the various investigators analyzed these velocity fluctuations at a point to obtain a single mean velocity value was not indicated in their publications.

Surge Frequencies

The frequency of the oscillations was found to vary inversely as the diameter of the tube and inversely as the length of the tube. The amplitude of the fluctuation was lower with conically divergent tubes than with cylindrical tubes. In all the tests, the relationship between discharge and frequency was very linear for a given tube and inlet swirl condition. This concept has been used by at least one manufacturer in a flow-metering device.

Mathematical Description of the Swirling Flow

Many attempts have been made to describe the swirling flow in cylindrical and divergent tubes mathematically. Almost without exception, the basic assumptions restrict the classes of solutions to rotationally symmetric flow. This means that any disturbances which are predicted will be symmetrical and will appear on the axis of the conduit. Prediction of a spiral-shaped vortex is automatically eliminated by the basic assumptions. In general, it is not possible to make the necessary assumptions about the flow, a *priori*, which permits a description of the spiral vortex. However, it is possible to obtain analytic descriptions of the spiraling flow empirically.

In one empirical method, an interpretation or explanation of the pressure fluctuations is made on rational grounds. Then an equation, containing constants to be determined experimentally, is written to describe the phenomenon. For instance, it has been assumed that the vibrations are produced by pertubations of the velocity and density of the fluid in the tube (Michelson, Vonnegut). This assumption leads to an expression for the frequency of the form

$$f = \frac{A\,V_S}{\pi D}\left[1 - p_2/p_1\right]^{1/2} \qquad (1)$$

The approach leads to the conclusion that high speed and motion in more than one dimension are necessary for the generation of the surge (Michelson). Although the explanation seems plausible, velocity measurements in air and water have shown that surging can exist even though the flow is everywhere definitely subsonic.

Another method for obtaining an empirical equation for the surging flow is to write the governing differential equations in dimensionless form. This results in a set of dimensionless parameters which can be used to correlate the experimental data. The approach leads to equations of the form

$$\frac{f\,D_3}{Q} = \frac{A\Omega D}{\rho Q^2} + B \qquad (2)$$

where A and B are empirically determined constants (Cassidy, Falvey). This method implies that gross flow parameters are sufficient to describe the surge phenomenon with swirling flow. In general, good correlations have been obtained with this approach even when using such widely different density fluids as air and water.

Instead of studying fully surging flow, some investigators have tried to define the conditions at which a disturbance will form with swirling flow. These attempts have led to the conclusion that the disturbance is a finite transition between two states of flow (Benjamin).

Analytic studies indicate that the disturbance will occur when the ratio of the rotational velocity component to the axial component is greater than about 1.0 (Squire). The critical breakdown point can also be described by the empirical expression mentioned above. Expressed in terms of the gross parameters, the disturbance will occur in a straight pipe when

$$\frac{\Omega D}{\rho Q_2} = 0.008 \frac{L}{D} + 0.17 \ . \qquad (3)$$

The empirical methods mentioned above could be eliminated if the upstream and downstream boundary conditions could be accurately described. One attempt was made to approximate these conditions through an iterative procedure using the simplified equations of motion (Gore, Ranz). Through this procedure a flow field was obtained which has some of the important features of the observed flow.

OBSERVATIONS WITH MODEL AND PROTOTYPE TURBINES

General

Often the use of hydraulic models to predict prototype performance is questioned. In some cases, these doubts are justified, especially when the flow phenomena under study have not been carefully defined. Some of the authors conducted model-prototype comparisons and indicate areas in which model tests can be beneficial.

For instance, it has been demonstrated that with turbulent vortices neither the velocity distribution nor the circulation are functions of viscosity if the flow is turbulent and fully developed (Hoffman and Joubert). Thus, one would expect flow patterns, velocity distributions, and pressure fluctuations in the model and prototype to be related through an Euler number relationship. These considerations have been verified in experiments which showed close agreement between the size of the vortex core underneath model and prototype runners, as well as damage areas to be expected from cavitation (Girand).

Attempts to correlate penstock frequencies and amplitudes have, on the other hand, been rather unsuccessful. The reason for these discrepancies is apparent if the entire power generating system is considered as a vibrating system having several degrees of freedom with each capable of resonance being driven by some forcing function. The forcing function which drives the system is created by pressure fluctuations in the draft tube. The frequency and amplitude of these fluctuations can be obtained from a hydraulic model study. The degrees of freedom or parts of the system which could resonate include the penstock, other generators connected to the same penstock, the surge tank, the turbine generator unit and connecting shafts, the regulating system, and the electrical power network. Obviously, this multitude of factors cannot be accurately simulated in the hydraulic model. Therefore, correlation of amplitudes and frequencies in the penstock between model and prototype measurements would be fortuitous. However, this does not imply that data from the model study cannot be used to predict prototype penstock pressure fluctuations. Existing analytical methods based on impedance concepts have proven highly successful in predicting penstock frequency and amplitudes created by periodic pressure or discharge fluctations (Streeter, Zolotov).

A model can thus be expected to accurately represent velocity distributions, forcing frequencies, and amplitudes in the prototype draft tube. The appearance of cavitation and areas which can be expected to sustain cavitation damage can also be predicted on the basis of model experiments. The model data can then be used in a mathematical description of the system to determine power swings and penstock pressure fluctuations in the prototype.

The scaling laws to convert model frequencies and amplitudes to prototype values are

$$f_p = f_m \, (D_m/D_p) \, (H_p/H_m)^{1/2} \qquad (4)$$

for frequency, and

$$\Delta p_p = H_p \, (\Delta p_m/H_m) \qquad (5)$$

for amplitude.

Velocity Distributions

The type of flow observed during periods of large pressure surges is described by most experimenters as being typical of Regime 5 or 6 type flow, Figure 2. Without surging, a Regime 4 type flow is observed in the model. These regimes are modified to some extent by the pressure in the draft tube. For high tailwater levels, the vortex core remains solid. With lower tailwater levels, the pressure in the center of the vortex core decreases until at some critical value of tailwater the pressure in the vortex core reaches the vapor pressure of the water and a hollow vortex core results. If air is admitted to the draft tube, a hollow core can be achieved at pressures greater than the vapor pressure of water.

A distinction was made between hollow and solid vortex cores. The hollow vortex was called "soft" and the solid vortex "hard" (Vuskovic and Velensek). This terminology was developed during observations of

pressure fluctuations in the draft tube. With a solid core the intensity of the pulsations was severe. By admitting air or dropping the tailwater level to form water vapor in the vortex core, the intensity of the pulsations decreased or softened. The use of this terminology is unfortunate. Recent tests have revealed that air admission or decreasing the tailwater level can make the intensity of the pulsations increase in some cases (Ulith).

The velocity distribution in the throat of the draft tube is a function of the runner speed, distributor proportions, discharge, and the shape of the runner blades. Until recently, velocity distributions were obtained from simplified theories involving runner speed (i.e., assuming ru = constant) or from model tests. With the advent of the computer, better methods for computing the three-dimensional velocity distribution have been developed (Jansen). These have reduced the need for a comprehensive model test program. With the mathematical model, various parameters can be examined and a final design developed. The final design can then be verified by a model study. These methods, although a tremendous improvement over previous computational methods, still are inadequate since the effect of velocity distributions produced in the draft tube are not considered.

Experiments with models thus seem to be the only reliable method of determining velocity distributions in the draft tube. Some velocity distributions for typical units have been measured with a vapor-filled vortex core and with a solid vortex core (Dziallas, Yamazaki). In both cases, a positive, nonzero value of peripheral velocity was measured over the entire cross section. These results are clearly incorrect since the peripheral velocity must be zero somewhere in the cross section. For flow which rotates both clockwise and counterclockwise in the cross section, there must be an odd number of points on the diameter of the section having zero peripheral velocity. However, the experiments of one investigator are particularly noteworthy (Mollenkopf). Through the use of a hot film probe, he was able to obtain velocity measurements in the draft tube which represent essentially a "snapshot" of the instantaneous distribution. The circumferential velocity distribution computed from Mollenkopf's work differs significiantly from the distribution of a potential vortex in a cylinder, Figure 3.

Surge Frequencies

The earliest prediction of the surge frequencies was in 1940 (Rheingans). The well known relationship is

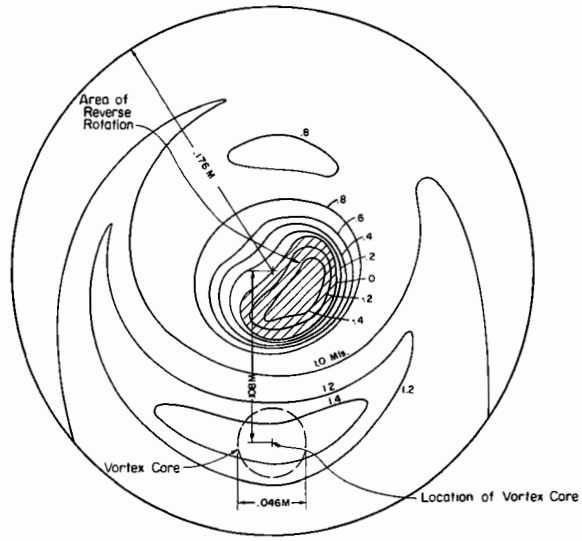

Derived from Mollenkopf (67), Figures 14 and 15, Plane IV
Rotational Speed of Vortex around tube about 1.8 rev/sec.

a. Measured distribution.

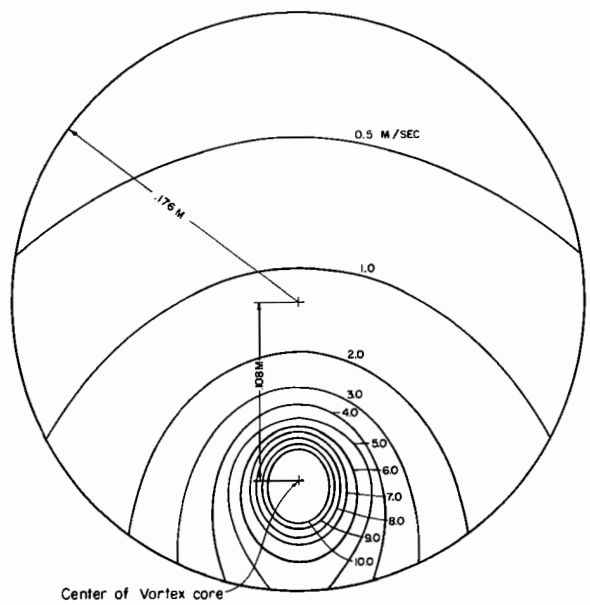

Vortex Strength K = .217 M^2/sec.
Rotational Speed of Vortex around Tube = 1.8 rev./sec.

b. Theoretical distribution resulting from irrotational flow around a vortex.

Figure 3. Circumferential velocity distribution in a conduit.

$$f = \frac{n/60}{3.6} \qquad (6)$$

This equation is based on observations of existing plants and represents the surge frequency when the greatest pressure fluctuations occur. Other investigators have argued that the constant in the denominator should be something closer to 4.0. However, the exact magnitude of the constant is somewhat immaterial since the equation is empirical with no firm theoretical basis.

The next major attempt to develop a mathematical model for predicting the surge frequency utilized the concept of a rotational vortex moving in an irrotational vortex field (Hosoi). The equation which was developed had the form of the Rheingans equation. It was

$$f = 1/2\,(V_a/R)^2(N/60)$$

Model tests indicated Va/R varied between 0.7 and 0.8. Unfortunately, velocity distribution studies have not substantiated the velocity field assumptions made in this method.

The most recent attempts to predict the surge frequency utilize gross flow parameters (Falvey, Cassidy, 1970). For a given draft tube size, the surge frequency is given by

$$f = \frac{Q}{D^3}\left(0.54\,\frac{\Omega D}{\rho Q^2} + 0.31\right) \qquad (7)$$

The parameter $(\Omega D/\rho Q^2)$ can be computed for a particular turbine from the following expression

$$\frac{\Omega D}{\rho Q^2} = \frac{DR \sin \alpha}{BNS} - \frac{550\, p_{11}\, D}{2\sqrt{2g\,\rho\, Q_{11}^2}\;\phi\; D_2} \qquad (8)$$

The first term on the right of the equal sign is a function of the wicket gate geometry. The second term represents the turbine runner characteristics. The dimensionless ratio thus takes both the wicket gate geometry and the turbine runner characteristics into account when predicting the surge frequency. The effect of draft tube geometry on the constants in Equation 7 has not been established.

FIELD EXPEDIENTS TO REDUCE SURGING

Air Admission

The most frequently mentioned means to reduce the amplitude of the surging is the admission of air into the runner or draft tube. With low tailwater levels, the pressure below the runner is less than atmospheric. In this case, suitable venting is all that is required to supply air to the vortex. On the other hand high tailwater levels require the use of an air compressor to force the air into the draft tube. Since the most severe pulsations can occur with the high tailwater levels, provision for the admission of air may be costly.

Both the location and the manner of air injection are important. For instance, air admitted to the inlet side of a turbine runner eliminated pressure pulsations for all gate openings less than 72 percent of optimum gage (Konig, Whippen). Normally, however, air is admitted to the lower side of the runner. Many air admission schemes have been used. They include air admission through extensions of the turbine shaft, through pipes or especially formed streamlined shapes, oriented across the draft tube, and behind the runner band (Dziallas), Figure 4. For axial flow runners the most effective location for air injection is through holes in the runner cone (Isaev). Recent studies indicate the most effective aeration location with high specific speed Francis-type runners is injection of compressed air into the annular chamber between the wicket gates and the runner (Ulith). Other injection locations have been used successfully. Even injection from the draft tube wall or from behind the runner band can reduce the surge amplitude. The migration of the air to the vortex core in these cases is due to recirculation of water in the draft tube.

The quantities of air needed to reduce surging are normally expressed in terms of the ratio of the volumetric airflow at standard temperature and pressure to the turbine discharge at full load point with rated head. Using this definition, the air quantities needed for maximum surge attenuation with injection through the runner cone in low specific speed units are in the range 1 to 2 percent. Whereas, with air injection into the space between the wicket gates and the runner only 0.05 to 0.10 percent air is needed with high specific speed units (Ulith).

The location at which the air is admitted has a significant effect on the efficiency of the unit. For instance, admission of air either upstream from the runner or through deflecting surfaces of the head cover result in loss of efficiency. Air admission between the runner and the wicket gates may result in slight increases in efficiency. Whereas, air admission through the runner cone has, in some cases, led to a 0.5 to 1.0 percent increase in efficiency (Isaev). In these cases, the gain in efficiency with air admission through the cone may be attributed to improved flow conditions in the draft tube as a result of air filling the reversed flow region.

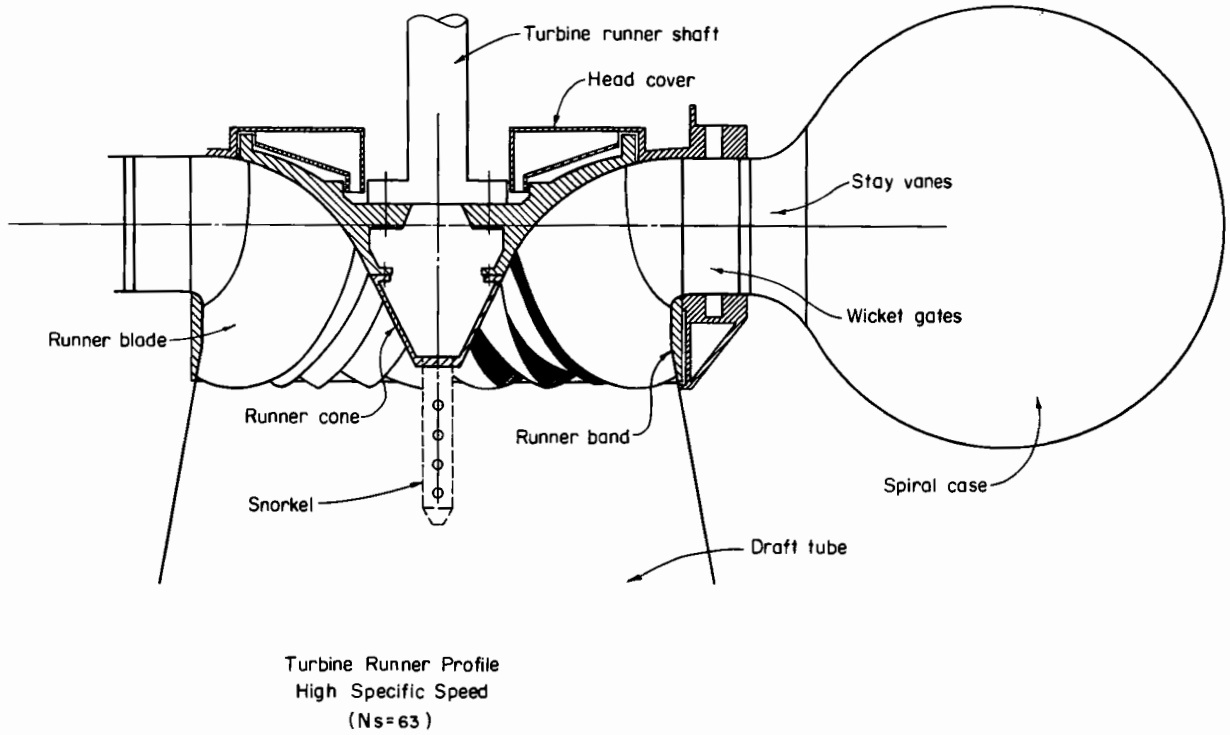

Figure 4. Definition sketch of turbine nomenclature.

Air admission may not always lead to decreased surge amplitudes. The reduction in surge amplitude has been found to be dependent on sigma (or tailwater level) (Ulith). In fact, for sigma values larger than about 0.3 to 0.4, air admission may increase the surge amplitude. An upper limit for the quantity of air which could be admitted advantageously was also noted (Isaev). For instance, during part load operation with a Kaplan turbine, the maximum reduction in surge amplitude was observed with 0.5 percent air. Increasing the airflow quantity to 3 or 4 percent increased the surges at the inlet to the elbow. Under motoring conditions 2 percent air resulted in the largest surge reduction. Increasing air quantities above 2 percent led to larger surges.

The necessity of providing for compressed air with high tailwater levels may or may not be a disadvantage. Frequently air is available at the plant in sufficient quantities and at adequate pressure to provide the required air admission. If air is admitted at the runner cone, the maximum pressure required is about equal to the submergence of the runner below the tailwater. With high-speed runners, air injection at the periphery of the head cover requires an air pressure of about 40 to 50 percent of the head. Admission in the spiral case would require a pressure approximately equal to the head on the unit. One side benefit of air admission upstream from the runner is protection of the runner from cavitation damage. It should be stressed, however, that compressed air, while it may be available for surge suppression, requires energy and equipment for its production.

Fins and Flow Splitters

Since the instability or surging is caused by the rotation of the flow in the draft tube, a logical way to eliminate the pulsations would be to eliminate or reduce the swirl. One means to reduce the swirl is to place fins parallel with the axis of the runner either on the walls on the draft tube or on the runner cone. The fins are usually a half a throat diameter long and extend about 0.1 to 0.2 throat diameters into the flow. Between two and eight fins are used.

If the fins extend far enough into the flow to touch each other, they are known as flow splitters, Figure 5. Normally, the flow splitters consist of three fins or vanes, although a greater number have been used.

The orientation, number of fins or elements of a flow splitter, and height of the fins or flow splitter are significant parameters in obtaining a maximum

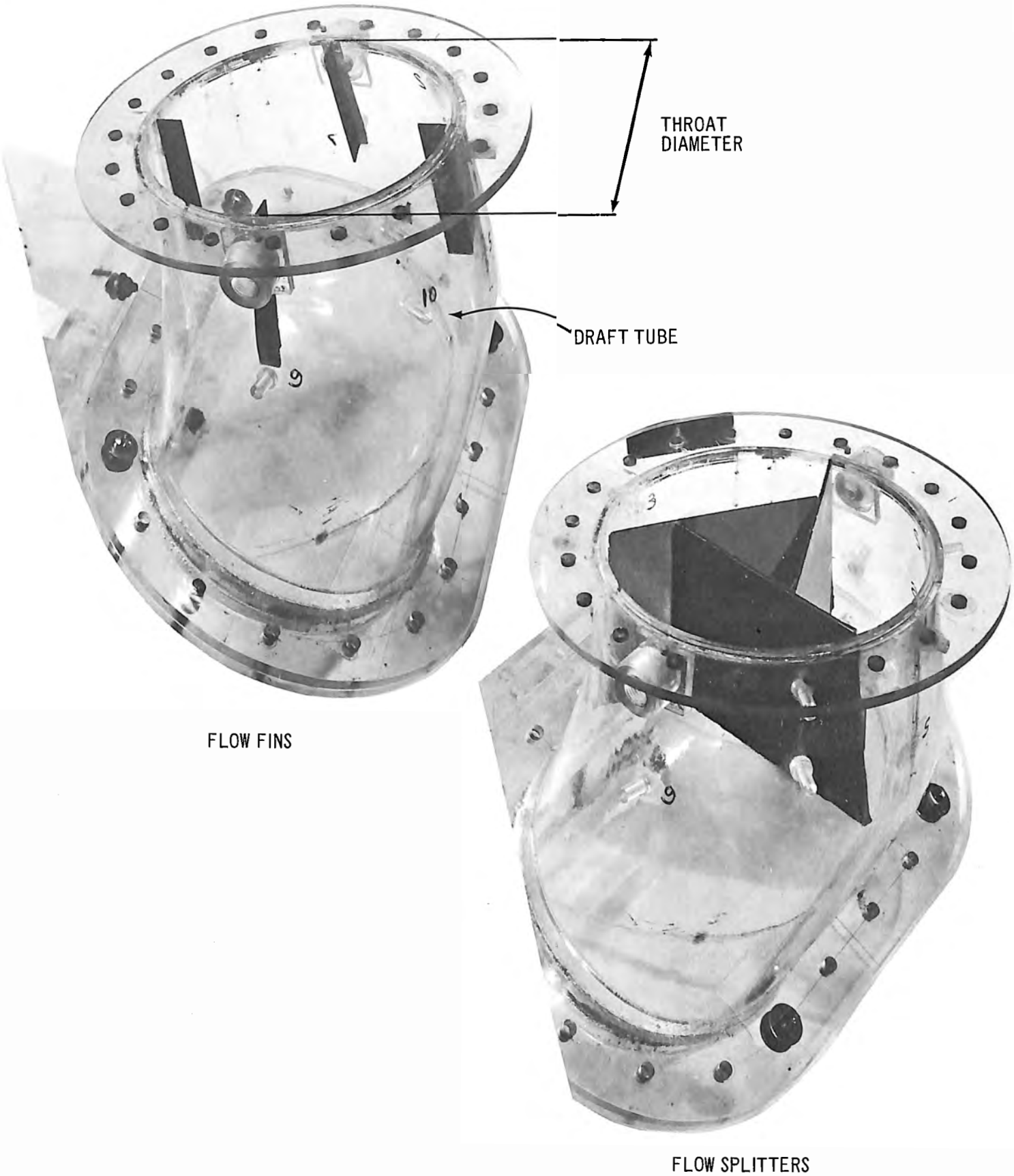

Figure 5. Fins and flow splitters.

reduction in the swirl. No specific guidelines can be given as to height or orientation of the fins since these parameters depend upon the height of the diffusor cone in the draft tube. However, tests indicate that the flow splitter should be place as high as possible in the draft tube cone for maximum effectiveness (Falvey).

The disadvantages of fins and flow splitters are a loss in efficiency, a necessity to guard the appurtenances from cavitation damage, high-frequency noise, and structural problems involved in installing them. Because of these disadvantages the use of fins is normally restricted to small units.

Extensions to Runner Cone

Another approach used in reducing the draft tube surges is to fill the reverse flow region on the axis of the draft tube with a solid body of rotation. The body can either be fixed by attaching it to the draft tube wall, as in the Moody spreading cone, or rotating by attaching it to the runner cone (Scheidenhelm's discussion of Allen). Their earliest use was on the Merrimack River in Massachusetts around the years 1860 to 1910, Figure 6. The basis for this concept comes from observations with rectilinear flow where areas of reverse flow are prevented from forming. Elimination of the reverse flow areas reduces the unsteadiness by streamlining the overall flow. Indiscriminant use of this principle is not recommended. One unpublished report described a low specific speed runner which stopped surging when the Hydraucone broke off 4 feet below the runner.

There are at least two disadvantages to using extension of the runner cone (Dzialles, Kovalev). These are the large lateral forces on the extension and the unfavorable velocity head recovery in the draft tube. These disadvantages limit this type of surge suppressor to relatively low specific speed units. In addition to these disadvantages, the diameter of the extension would have to be adjustable for optimum results since the diameter of the reverse flow area varies between 0.2 to 0.8 of the draft tube diameter.

Coaxial Hollow Cylinder

Model tests indicate that a hollow cylinder, which resembles a barrel with the ends cut out, placed concentrically in the draft tube will reduce the amplitude of the pressure surges and slightly increase efficiency (Vuskovic, Lecher), Figure 7. Significantly higher frequencies were also observed. In the zone of maximum surges, the frequencies corresponded roughly with the turbine's rotational speed. The design of these devices must be accomplished by model

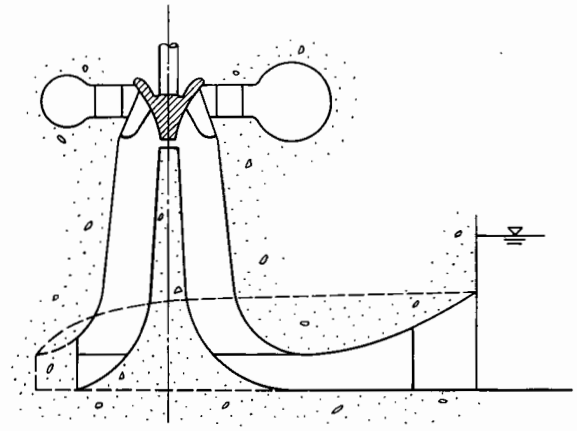

a. Moody spreading cone.

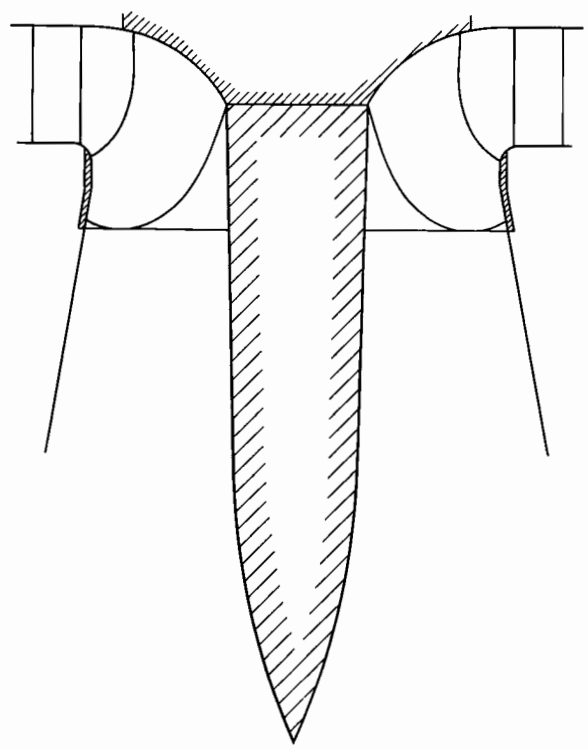

Configuration used at Washington Mills
Lawrence Risdon Wheel
1881 on Merrimack River

b. Rotating extension.

Figure 6. Extensions to runner cone.

testing since it was noted that small form changes alter the performance considerably. The largest reduction in the pressure pulsations amounted to 70 percent.

The major disadvantage of the coaxial hollow cylinder is providing enough strength in the supports to keep the cylinder centered. The cylinder must also be made rigid enough to keep it from deforming. To minimize losses in efficiency, the supports should be designed so they thet do not cause a significant restriction to the flow.

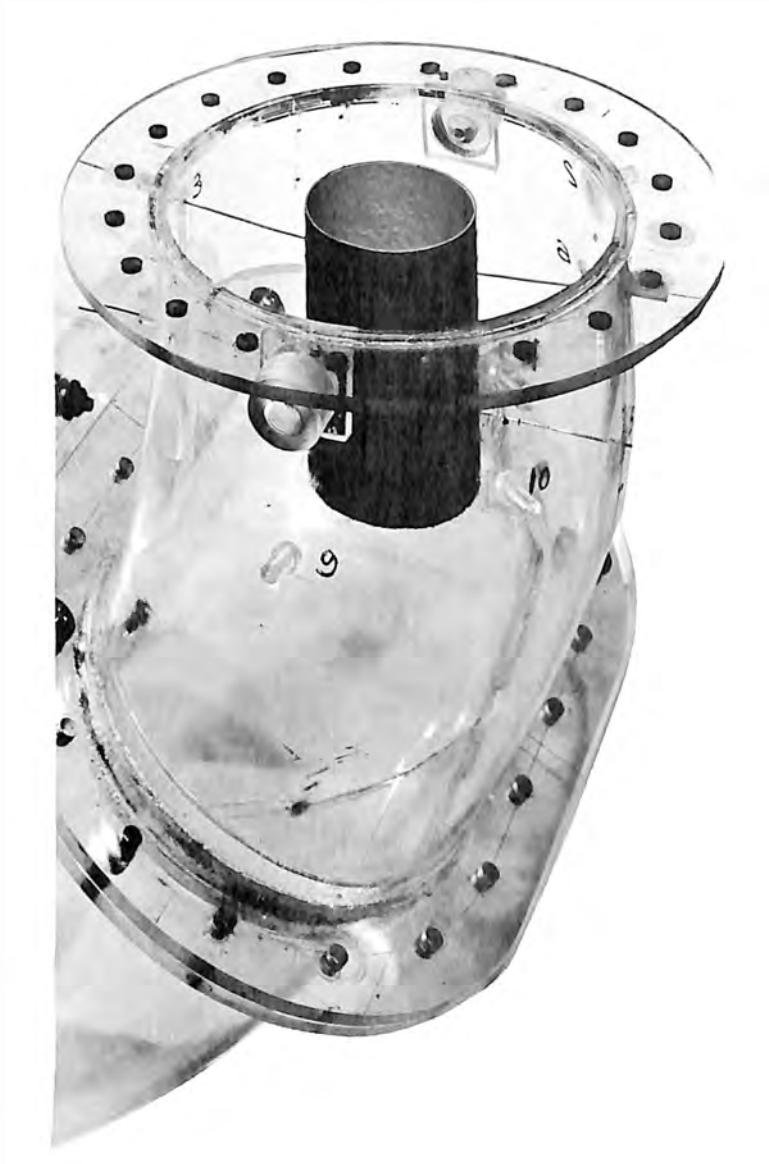

Figure 7. Coaxial hollow cylinder.

SYMBOLS USED IN THE TEXT

f	frequency, hz
g	acceleration of gravity
n	rotational speed of runner, rpm
p	pressure
r	radius from centerline of tube
r_a	radius of rotational vortex core
A,B,	constants
D	draft tube diameter
D_2	minimum clear diameter of runner
H	net available head across turbine
L	length of tube
N	number of wicket gates
N_s	specific speed
P	power generated by turbine, horsepower
Q	discharge
R	draft tube radius
S	minimum clear space between wicket gates
V_a	local axial velocity
V_s	sonic velocity
V_t	local tangential velocity
Δp	pressure fluctuation
α	angle between velocity vector and radial
ρ	density
ϕ	ratio of rotational speed of runner to maximum velocity for a given head (spouting velocity)
Ω	angular momentum = $\int_0^R 2\pi r^2 \rho V_a V_t \, dr$

Subscripts

1	upstream
2	downstream
m	model
p	prototype

CONVERSION FACTORS

In the English system of measurements, all turbine quantities are referred to unit dimensions which are:

length, 1 foot
discharge, 1 cubic foot per second
horsepower, 550 foot-pounds per second

In the metric system, the unit quantities are:

length, 1 meter
discharge, 1 cubic meter per second
horsepower, 75 kilogram-meters per second

Due to these differences, the unit characteristics of a turbine are not always the same in the metric and English systems. The following table gives the equivalents to aid the reader in referring the quantities mentioned in the articles to his own frame of reference.

Quantity	Definition	Multiply English units by these factors to obtain metric units
phi	$\phi = \frac{\pi D_2 n}{60\sqrt{2gh}}$	1.0
specific speed	$N_s = \frac{n P^{1/2}}{H^{5/4}}$	4.45
specific discharge	$Q_{11} = \frac{Q}{D_2^2 H^{1/2}}$	0.552
specific power	$P_{11} = \frac{P}{D_2^2 H^{3/2}}$	64.9
unit speed	$n_{11} = \frac{nD}{H^{1/2}}$	0.552

ALPHABETICAL LISTING OF AUTHORS

BIBLIOGRAPHY OF VORTEX ACTION IN CLOSED CONDUITS AND DRAFT TUBE SURGING

I. Bibliographies

1. Dobratz, B. M., 1964, Vortex Tubes, A Bibliography, University of California, Lawrence Radiation Laboratory, Livermore, California, UCRL-7829

A 101-item bibliography concerning energy, thermodynamic, and flow characteristics in tubes which contain a vortex. A large number of these references are concerned with the Ranque-Hilsch Tube.

2. Solomon, L., 1965, Fluid Motion and Sound, U.S. Department of Commerce, Clearinghouse for Federal Scientific and Technical Information, AD-625087

An annotated bibliography which summarizes the work done by the Department of Engineering, University of California, Los Angeles, in the field of sound generated by air jets. The only reference of direct interest was one concerning vortex sound. The other references are concerned with sound generation by other methods.

3. Kuchemann, D., 1965, Report on the IUTAM (International Union for Theoretical and Applied Mechanics) Symposium on Concentrated Vortex Motion in Fluids, Journal of Fluid Mechanics, Vol. 21, Part 1, pp 1-20

A state-of-the-art summary as defined at a symposium organized by the International Union for Theoretical and Applied Mechanics which met in July 1964. The summary included the following topics:

- The Formation of Coherent Vortex Sheets
- The Structure of Smooth Vortex Cores
- Various Deviations from Smooth Core Flows
- The Occurrence of Columnar Vortices in Rotating Fluid Systems
- The Appearance and Structure of Vortex Wakes

Included are 95 references, many of which are discussed in the summary.

II. Mathematical Description of Flow

A. Theories Neglecting Viscosity and Turbulence

4. Kelvin (Sir William Thomson), 1910, Mathematical and Physical Papers, Cambridge University Press, Vol. IV, Chapter 15, Vibrations of a Columnar Vortex, pp 152-165

Originally published in 1880. Develops basic three-dimensional, unsteady, irrotational flow equations and investigated the effect of small sinusoidal disturbances on these equations of motion and continuity. The basic equations are solved with various boundary conditions which result in descriptions of the periodic disturbance in the motion of:

a. A rotating liquid in a space between two concentric circular boundaries which have infinitely small, simple harmonic motion.

b. A rotating fluid as above, except that the radius of the inner cylinder is zero.

c. A hollow irrotational vortex in a fixed tube.

d. A hollow irrotational vortex in a fluid of infinite expanse.

e. A combined Rankine vortex of infinite length located between two parallel plates.

The amplitude of the periodic disturbances as well as the radial and axial velocities is assumed infinitely small as compared with the tangential velocity.

5. Michelson, I., 1955, Theory of Vortex Whistle, The Journal of the Acoustical Society of America, Vol. 27, No. 5, pp 930-931

Develops a relationship for frequency based on two-dimensional, unsteady, isentropic flow. The tone produced is associated with the perturbation of a steady flow of speed U and density ρ_0. Under these conditions, the frequency, in hertz, is given by:

$$F = \frac{C}{\pi D} \left[\frac{2}{\gamma}\right]^{1/2} \left[\frac{P_1 - P_2}{P_1}\right]^{1/2}$$

where C = speed of sound
γ = 5/3 for monatomic gasses
γ = 7/5 for diatomic gasses
D = diameter of tube
P = reservoir and exit pressures

6. Squire, H. B., 1960, Analysis of Vortex Breakdown Phenomenon, Part 1, Aero Department, Imperial College, Report No. 102

The theory of standing waves on a cylindrical vortex is developed and applied to three cases of swirl. These cases are:

(1) forced and free vortex

$$V_t = V_o r \qquad \text{for } r \leqslant 1$$

$$V_t = V_o/r \qquad \text{for } r \geqslant 1$$

(2) a viscous vortex

$$V_t = V_o/r\ [1 - \exp(-r^2)]$$

(3) a specially constructed distribution

$$V_t^2 = \frac{V_o^2}{t} \int_o^t y^2 \operatorname{sech}^2 y dy$$

In every case, a uniform axial velocity distribution is assumed. The solutions predict a vortex breakdown when

$$1.0 \leqslant V_t/V_a \leqslant 1.20$$

7. Benjamin, T. B., 1962, Theory of the Vortex Breakdown Phenomenon, Journal of Fluid Mechanics, Vol. 14, pp 493-629

Development of a theory which predicts two states of flow in a vortex. The theory is based on a stationary axisymmetric perturbation of the stream function. The form of the perturbation is a standing wave, $\psi = \phi\ (Y) \sin\ (X + \nu)$. The two states of flow correspond to conditions before and after the perturbation. In the derivations, radial components of velocity are not considered. This theory was developed to explain the abrupt change in structure which sometimes occurs in swirling flow, especially in the leading-edge vortex formed above sweptback lifting surfaces.

8. Chanaud, R. C., 1963, Experiments Concerning the Vortex Whistle, Journal of the Acoustical Society of America, Vol. 35, No. 7, pp 953-960

Two-dimensional equations of rotation in a plane perpendicular to the tube axis were used to describe the flow. To these equations, nonaxisymmetric disturbances were applied to obtain a set of perturbed differential equations. The complete solution of these equations was not determined.

9. Gore, R. W. and Ranz, W. E., 1964, Backflows in Rotating Fluids Moving Axially through Expanding Crop Sections, American Institute of Chemical Engin...s Journal, Vol. 10, No. 1, pp 84-88

The axially symmetric equations for rotational flows were simplified through dimensional analysis. An axial inlet velocity distribution was assumed and substituted into the equations. Through an iterative procedure, a flow field is obtained which has some of the important features of the observed flow.

10. Kulonen, G. A. and Kulonen, L. A., 1966, On the Calculation of Axisymmetric Vortex Flow of an Ideal Incompressible Fluid in Curvilinear Channels, Leningrad Universitet, Vestnik, Seriya Matematiki, Mekhaniki i Astronomii, No. 1, pp 145-153

The equations of continuity and momentum are reduced to a single nonlinear partial differential equation which is solved for a 90° bend through successive approximations.

11. Benjamin, T. B., 1967, Some Developments in the Theory of Vortex Breakdown, Journal of Fluid Mechanics, Vol. 28, Part 1, pp 65-84

A further development of Reference 7. The requirement of infinitesimal perturbations is relaxed and the theory is expanded to include a change from cylindrical flow to one in which a finite standing wave exists.

12. Fraenkel, L. E., 1967, On Benjamin's Theory of Conjugate Vortex Flows, Journal of Fluid Mechanics, Vol. 28, Part 1, pp 85-96

A substantiation of Benjamin's theory (References 7 and 11) from a mathematicians point of view. The conclusions of Benjamin are found through a method which does not require the calculus of variations.

B. Theories Including Viscosity but Neglecting Turbulence

13. Talbot, L., 1954, Annular Swirling Pipe Flow, Journal of Applied Mechanics, Vol. 21, pp 1-7

The problem of rotationally symmetric steady swirl superimposed on Poiseuille flow in a round pipe was solved through numerical analysis. The solution was obtained through consideration of the momentum-integral method which is analogous to that used in boundary layer analysis. The results are not exact but are in the correct order of magnitude.

14. Howard, L. N., 1963, Fundamentals of the Theory of Rotating Fluids, Journal of Applied Mechanics, Transactions of the ASME, December, pp 481-485

An expository survey of some of the mathematical models which have been used in the theory of rotating fluids. The examples are restricted to geophysical fluid dynamics.

15. Turner, J. S., 1966, The Constraints Imposed on Tornadolike Vortices by the Top and Bottom Boundary Conditions, Journal of Fluid Mechanics, Vol. 25, Part 2, pp 377-400

Steady, incompressible, axisymmetric flow in a region remote from solid boundaries was assumed. The equations are solved by assuming an expression for the stream function. Boundary layer conditions which are responsible for the up and down flows in the vortex are examined. The results are in good agreement with experimental measurements.

16. Granger, R., 1966, Steady Three-dimensional Vortex Flow, Journal of Fluid Mechanics, Vol. 25, Part 3, pp 557-576

Exact differential equations of motion are developed in terms of the circulation and the stream function for steady axisymmetric flow. The equations are solved through the use of a power series provided the vorticity distribution along the axis of rotation is known. Solutions are restricted to small perturbations.

17. Cassidy, J. J. and Falvey, H. T., 1970, Observations of Unsteady Flow Arising After Vortex Breakdown, Journal of Fluid Mechanics, Vol. 41, Part 4, pp 727-736

In rotating flow moving axially through a straight tube, a helical vortex will be generated if the angular momentum flux is sufficiently large relative to the flux of linear momentum. This paper describes an experimental study of the occurrence, frequency and peak-to-peak amplitude of the wall pressure generated by this vortex. The experimental results are displayed in dimensionless form in terms of a Reynolds number, a momentum parameter and tube geometry.

C. Theories Including Viscosity and Turbulence

18. Hoffman, E. R. and Joubert, P. N., 1963, Turbulent Line Vortices, Journal of Fluid Mechanics, Vol. 16, Part 3, pp 395-411

Axisymmetric, steady-state flow is assumed. Various phenomenalistic considerations of the turbulent shear stresses are used to develop velocity profiles. This, in conjunction with dimensional analysis, leads to an empirical description of the flow which is substantiated with experiments.

19. Kreith, F. and Sonju, O. K., 1965, The Decay of a Turbulent Swirl in a Pipe, Journal of Fluid Mechanics, Vol. 22, Part 2, pp 257-271

Steady, incompressible, axisymmetric flow in a pipe was considered. The resulting equations were solved through the use of perturbation theory. The theoretical swirl velocity agreed well with experimental measurements at distances of less than 20 diameters but deviated further downstream.

D. Miscellaneous Mathematical Considerations

20. Betchov, R., 1965, On the Curvature and Torsion of an Isolated Vortex Filament, Journal of Fluid Mechanics, Vol. 22, Part 3, pp 471-479

The flow equations for a very thin, curved vortex filament in an inviscid fluid are considered. The elementary solution of a helical vortex filament is shown to be unstable.

21. Streeter, V. L. and Wylie, E. B., 1967, Hydraulic Transients, McGraw-Hill

A textbook describing various analytical methods to compute water-hammer waves in conduits and surge tanks. An impedance computational procedure for conduits is described which

permits a rapid examination of the system for resonance.

III. Experimental Observations with Elementary Models

22. Talbot, see Reference 13

Tests were made in a 1.25-inch inside-diameter plastic pipe with Reynolds numbers between 135 and 3,240. Swirl was induced by a rotating section 25 diameters long. The transition between stable swirl and unstable swirl was presented on a graph. For Reynolds numbers less than 1,800, a nonperiodic sinuous motion was the instability observed at the breakdown between stable and unstable flow. For Reynolds numbers in excess of 2,500, a spatially periodic disturbance was observed. Measurements of the swirl decay rate are presented.

23. Vonnegut, B., 1954, A Vortex Whistle, Journal of the Acoustical Society of America, Vol. 26, No. 1, pp 18-20

Tests were conducted with both air and water. In both cases, an audible sound was obtained as the spiraling flow left the cylindrical tube. From the experimental results, the following equation was derived to predict the frequency of the outlet sound:

$$F = \frac{V}{\alpha \pi D} \left[\frac{P_1 - P_2}{P_1} \right]^{1/2}$$

where F = frequency, in hz
α = a constant less than 1 which accounts for frictional losses in the cylinder
v = velocity of sound in ft/sec
D = diameter of the tube, in ft
P_1 = inlet pressure, in psi
P_2 = exit pressure, in psi

Results indicate that the frequency varies inversely as the length of the cylinder. In addition, the sound intensity dropped significantly with a conically diverging tube.

24. Murakami, M., 1961, Vibration of Water-Turbine Draft Tubes, Transactions ASME, Vol. 83, No. 1, pp 36-42

Experiments were performed on straight, conically diverging, conically converging, and elbow-type draft tubes. The inlet swirl was imparted by a set of stationary guide vanes placed at the turbine location. A theory is presented which essentially duplicates the classical development describing the motion of a line vortex within an irrotional flow field. A method is presented to estimate the size of the vortex core at the top of the draft tube. The deviations between the idealized mathematical description of flow and the true flow are reconciled through empirically determined values. The author concludes that through the use of his equations one can compute the frequency and force of the draft tube surges given the draft tube dimensions, the turbine runner dimensions, and the load conditions on the turbine.

25. Harvey, J. K., 1962, Some Observations of the Vortex Breakdown Phenomenon, Journal of Fluid Mechanics, Vol. 14, pp 585-594

Experiments were made with spiraling flow in a cylindrical tube. Tests indicated that a change in the flow state was observed when the ratio of the tangential velocity to the axial velocity was 1.21 at a point within the flow stream. The length to diameter ratio of the tube was 13.71 and the Reynolds number was about 9.7×10^3. The rotation of the fluid was induced through 18 swirl vanes located in a plenum chamber at the pipe entrance.

26. Chanaud, see Reference 8

Experiments were performed with both air and water in cylindrical and flared tubes. The rotation was imparted through a single nozzle which discharged tangentially into a large cylinder that was connected to a smaller diameter test section. The range of Reynolds numbers tested was 5×10^3 to 1.7×10^4 with water and 7×10^3 to 8.6×10^4 with air. Length to diameter ratios of 1.35, 2.70, 5.40, 10.8, and 21.6 were investigated. Investigations of the sound field in a plane passing through the axis of the tube reveal a dipole-type pressure level distribution. The pressure levels of signals measured at diametrically opposite locations near the tube exist were 180° out of phase.

27. Hoffman, see Reference 18

Tests were made with air in which the vortex was generated by a wing which spanned a wind tunnel vertically. The lower half of the wing was mounted at an angle of incidence equal and

opposite to that of the upper half. It was found that for a turbulent line vortex rotating in the absence of constraining walls that the circulation of the vortex is proportional to the logarithm of the radius.

28. Gore, see Reference 9

Swirl was generated by passing air through a rotating perforated plate which was mounted perpendicular to the axis of the supply pipe. A critical value of the swirl ratio WR/V was noted for which the flow oscillated between forward flow and backflow. The critical swirl ratio was found to be independent of Reynolds numbers for $20 < Re < 60{,}000$ but that it depended on the geometry of the apparatus. With the plate flush with the end of the tube, the critical swirl ratio was 1.36. With the plate recessed 1 foot into a 0.4-foot-diameter tube the critical swirl ratio was 1.15.

29. White, A., 1964, Flow of a Fluid in an Axially Rotating Pipe, The Journal of Mechanical Engineering Science, the Institution of Mechanical Engineers, England, Vol. 6, No. 1, pp 47-54

The investigation studied the effect of rotation on turbulent and laminar flows by observing the pressure loss in a pipe. The pipe was 3/8-inch-diameter bore. Swirl was imparted through three different lengths of rotating pipe which were 69, 109, and 232 pipe diameters long. The range of Reynolds numbers varied between 1,000 and 30,000. The results indicate that the pressure drop decreases with rotation of the fluid when the flow is laminar. For Reynolds numbers greater than 8,000, the reduction in the friction factor was found to be primarily a function of a modified Rossby number (WD/V).

30. Chanaud, R. C., 1965, Observations of Oscillatory Motion in Certain Swirling Flows, Journal of Fluid Mechanics, Vol. 21, Part 1, pp 111-127

Experiments were conducted with both air and water with a cylindrical tube 0.5 inch in diameter and lengths which gave an L/D range of 1.35 to 21.6. In addition, tubes with conical expansions and contractions were investigated. The range of Reynolds numbers was from 130 to 7,000. Swirl was produced with a single tangential inlet, four tangential inlets, a set of stationary swirl blades, and a rotating section 30 pipe diameters long. The author notes that the terms in the equations of motion are all of such magnitude that it appears no important simplifications can be made to solve the problem analytically.

31. Kreith, see Reference 9

Swirl was generated with one of two twisted tapes having dimensionless pitch ratios of 9 and 15. The test section was constructed from 1-inch inside-diameter plastic pipe 100 inches long. Data were obtained in the range of axial Reynolds numbers from 18,000 to 61,000. The swirl decay rate as determined experimentally agrees rather well with that predicted theoretically.

32. Turner, see Reference 15

The experiments were performed in a 15- and a 22-cm-diameter cylinder. The water depth was 30 cm. Swirl was generated by rotating the cylinder and a "convection" region was established within the fluid by bubbling air up through the center of the vortex. The end of the air supply tube was placed 10 cm below the surface. This was provided with a hole to allow the air to escape. With the rigid lid, large oscillations in the vertical velocity were noted and the "waves passed up the center much as they would along a loose helical spring stretched from top to bottom of the tank."

33. Granger, see Reference 16

The experiments were conducted in a tank 4 feet high and 23 inches in diameter. Swirl was induced through a series of tangential inlets distributed over the entire surface of the cylindrical tank. The flow was recirculated and left the tank through a hole in the bottom surface of the tank. A free water surface condition existed at the top of the tank. Tests were made at circulation rates ($\Gamma = 2\pi r^2 W$) between 5.5 in.^{2}/sec and 17 in.^{2}/sec. Large amplitude precessional oscillations were observed at the lower rate and air entered the vortex core at the upper rate. Dimensionless curves are presented which give the variation of vorticity and axial velocity along the vortex axis, the radial variation of vorticity and axial velocity, and the axial variations of the core radius.

34. So, K. S., 1967, Vortex Phenomena in a Conical Diffuser, American Institute of Aeronautics and Astronautics Journal, Vol. 5, No. 6, June, pp 1072-1078

The study resulted in defining five flow regimes representing three types of vortex flow and two types of transitional phenomena. The vortex flow types were (1) laminar, one cell; (2) turbulent, one cell; and (3) turbulent, two cell. For one-cell flow, the fluid spirals inward toward the axis of rotation at points near a solid boundary which is perpendicular to the axis. At points far from the boundary, the flow is away from the boundary outward along the axis. With two-cell flow, the fluid moves toward the boundary at small distances from the axis and away from the boundary at large distances from the axis. The two transitional flow types are: (1) a laminar vortex breakdown phenomena and (2) the occurrence of a two-celled vortex within the diffuser and a one-celled vortex downstream. The experiments were made with air in a 6° diffuser having a throat diameter of 3.5 inches and a length of about 24 inches.

IV. Model and Prototype Tests with Draft Tubes and Turbines

35. Allen, C. M. and Winter, I. A., 1924, Comparative Tests on Experimental Draft-tubes, Trans ASCE, Vol. 87, pp 893-970

Model tests were conducted with a variety of draft tube shapes. Surging was observed to be the least severe with the most efficient draft tube. No quantitative results of surging amplitude or frequency were given.

36. Gibson, A. H. and Labrow, S., 1926, The Efficiency of Regain in Straight and Bent Draught-Tubes, the Institution of Civil Engineers, Selected Engineering Papers, No. 34

A theory is presented which indicated that the efficiency with curved draft tubes may be less than with straight draft tubes when swirl is present.

37. Heim, R., 1929, An Investigation of the Thoma Counterflow Brake, Mitteilungen des Hydraulischen Institut der Technischen Hochschule Munchen, Heft 3. Translated in 1935 by the American Society of Mechanical Engineers and entitled Transactions of the Munich Hydraulic Institute, Bulletin 3, pp 13-28

The brake consisted of a spiral vortex chamber connected to a long pipe or "draft tube." The resistance to flow through the chamber was greatest when flow entered the chamber through the long pipe. With flow leaving through the long pipe, a spiral vortex was observed for certain flow rates. This vortex was not eliminated when the pipe was arranged so that it discharged vertically upwards. Periodic oscillations were also observed for certain pressure ranges.

38. Hornsby, G. J., 1935, Hydraulic Model Studies for the Design of Draft Tubes for the Wheeler Dam, TVA, U.S. Bureau of Reclamation, Hydraulic Laboratory Report No. Hyd-35, Denver, Colorado

Swirl was induced in a model draft tube by 20 vanes set at angles of 0°, 15°, 30°, and 45° to the radial. An attempt was made to prevent air from being admitted to the draft tube. Ten draft tube configurations were tested (including alterations). All configurations had either one or two dividing piers. The performance of the draft tubes was evaluated on the basis of discharge coefficients. The results included pressure measurements along the top of the elbow and each draft tube conduit or barrel, as well as pressure measurements along the bottom of the elbow. Water profiles in the tailrace were also included. A poor velocity distribution at the exit of the draft tube was noted for large angles of swirl. Under some conditions all of the flow was concerned in one barrel.

39. Mockmore, C. A., 1938, Flow Characteristics in Elbow Draft-tubes, Trans ASCE, Vol. 103, pp 402-464, 39 Item bibliography

Swirl at the draft tube inlet caused pulsations with all models tested. However, one particular bend had the most severe pulsations when the angle of whirl at the entrance was about 45°. The frequency was about 4.0 hz. A region of backflow was noted in the draft tube cone, but in none of the experiments did the backflow region extend halfway around the bend. The whirl was induced by a series of vanes and the flow made visible by the admission of air.

40. Rheingans, W. J., 1940, Power Swings in Hydroelectric Power Plants, Trans ASME, Vol. 62, pp 171-184

A classic in the field of draft tube surging. The paper deals with the characteristics of the surges, their relation to power swings, the elimination of surges in the field, and design considerations which will prevent draft tube surges from

producing excessive power swings. Some of the important facts determined by the author are as follows:

a. Power swings always occur over a narrow range of gate openings.

b. The frequency of the draft tube surge is given by

$$f = \frac{w}{216}$$

where w = rotational speed of the turbine in rpm
f = frequency of the draft tube surge or power swing in hertz.

c. In some cases, the addition of fins to the draft tube walls or the admission of air on the axis of the draft tube has reduced surging. However, these methods frequently result in reduced efficiencies.

41. Wigle, D. A., et al, 1946, Hydraulic Model Studies for Turbines at Grand Coulee Powerplant, U.S. Bureau of Reclamation, Hydraulic Laboratory Report No. Hyd-198, Denver, Colorado

Tests were made with a model turbine runner and with three draft tube designs. The draft tube studies included measurement of flow distribution at the draft tube exit in the 6 and 1/2-inch-diameter draft tube throat with the optimum gate opening; observations of draft tube surging under various operating conditions; and the effect of splitter vanes in the draft tube throat and on the runner cone. The velocity tranverses in the throat of the draft tube indicated zero velocity on the axis. In addition, velocity concentrations were found in the right and left draft tube barrels at the optimum gate opening. The draft tube surging phenomenon was recorded on movie film. No quantitative measurements were indicated. Five equally spaced radial fins 2 inches long were placed in the draft tube throat. These were not effective in straightening the vortex filaments. Fins placed on the runner fairwater cone were not effective in straightening the vortex filaments and they also reduced the efficiency and peak horsepower. A set of three equally spaced radial vanes in the draft tube throat which had a hub connecting them to the fairwater was effective in straightening the vortex filaments. The most effective orientation of the fins to reduce surging was one in which one fin pointed downstream in the direction of flow from the draft tube. These splitters were about 1 and 1/2 to 2 inches long.

42. Yamazaki, T. and Tajiri, S., 1954, Experimental Research on Cavitation of Francis Turbine and Flow Conditions below the Runner, Hitachi Review, Vol. 5, pp 17-26

Measurements of whirl velocity, axial velocity, efficiency, and cavitation potential of two model Francis runners were performed. The velocity measurements, which were potentially the most valuable part of the paper, are either in error or the whirl velocity was not accurately defined. The authors indicate a finite value of the whirl velocity on the axis of symmetry, when in fact it must be zero at that location.

43. Kito, F., 1959, The Vibration of Penstocks, Water Power, Vol. 11, pp 379-385, 392

A description of resonance in penstocks in which the vibrations are due to deformations of the penstock out of a circular shape. A method for computing the response of a penstock is presented. Prototype tests illustrate the method when the cause of the vibrations is surging in the draft tube. Methods to eliminate this type of resonance through stiffener rings are indicated.

44. Deriaz, P., 1960, A contribution to the Understanding of Flow in Draft Tubes of Francis Turbines, International Association for Hydraulic Research, Hydraulic Machinery and Equipment Symposium, Nice, France

The author classifies and explains the types of flow observed in draft tubes under various operating conditions. Pulsations of the flowing water were observed even when no water vapor core was present. If the ratio of pressure pulses per minute to revolutions per minute is in the range 3 to 6, the presence of a single rope vortex can be assumed. Specific speed apparently does not have an important influence on this ratio. The author concludes that the only way to truly remedy draft tube instabilities is by using variable pitch blades.

45. Isaev, I. M., 1961, Nluanie sposoba vpuska vozdukha na pulsatziiu davleniia b otsasivaiushchei trube modeli osevoi gidroturbing (Influence of a Method of Air Admission on

Pressure Surges in Draft Tube Models of Axial Hydro-Turbines), Gidroma shino stroenie Trudy LPI, No. 215, Moscow and Leningrad, pp 58-68, USBR Working Translation No. 756

This paper describes hydraulic model tests of the effects of air admission on pressure surges in axial hydraulic turbines. The reduction or growth in surge amplitude and the change in unit efficiency were investigated for several locations of air admission and varying quantities of air. The particular study described was for a Kaplan turbine. It was concluded that the most effective method was introduction of air through the flow deflecting part of the cone. Surge amplitudes were reduced by up to 45 percent and efficiency of the unit increased 0.5 to 1.0 percent. (Author's summary.)

46. Kovalev, N. N., 1961, Gidroturbiny. Konstruktsii i voprosy proektirovaniya (Hydroturbines, Design and Construction), Mashgiz Gosudarstvennoe Nauchno-Teknischeskoe Izdatel stvo Mashinostroitel'noi Literatury, Moskva-Leningrad, Translated from Russian and published for U.S. Department of the Interior by the Israel Program for Scientific Translations

An excellent summary of all facets of turbine design and construction. Indicates that extensions to runner hub decrease pressure fluctuations and increase efficiency. However, the danger of damaging the runner by hydraulic forces increases as the hub is made longer.

47. Kliuikov, N. T., 1963, Nekotoyre resultaty isnytanii modelei radial' no-osevykh gidroturbin (Some results of model tests on Francis Hydraulic Turbines), Energomashinostroenie, No. 4, pp 35-37

Surging was observed in four model turbines for operating speeds outside of the range 1.06 Nopt to 0.78 Nopt, where Nopt is the speed at maximum efficiency. The author indicates that the water entering the draft tube can obtain a rotation motion due to unequal flow distributions in the spiral case.

48. Struna, A. and Solc, L., 1963, L'Introduction de l'Air dans le Diffuseur (Admission of Air into the Draft Tube), IAHR 10th Congress, London, Vol. 4, pp 179-185, USBR Translation No. 736

The paper describes flow conditions in the runner and the formation of a vortex core at part loads. Methods, both of minimizing the effects of part load pulsations and of eliminating them, are given. The authors suggest a method of air admission which involves separate systems for admitting air to the draft tube center and to the periphery. An empirical formula is given which has been proved by experience. Further suggestions are given based on operating experience at hydroelectric power stations.

49. Ruud, F. O., 1964, Hydraulic Turbine Setting Criteria, ASME Paper No. 64-WA/FE-10

Presents a number of case histories taken from Bureau of Reclamation experience where cavitation damage and surging have occurred.

50. Dziallas, R. R., 1964, Francisturbinen bei Teil-und Uberlast (Francis Turbines with Partial- and Over Loads), VDI Berichte, No. 75, pp 53-64

A report of model tests in which the velocity distribution efficiency curves and pressure fluctuations are given. The figures present conditions which could be expected to occur in a typical unit. Various schemes to dampen the oscillations caused by the vortex are presented and their disadvantages discussed.

51. Anon., 1964, Wheeler Project Vibration Studies, Units 9-11, Tennessee Valley Authority, Report No. 3-494, Norris, Tennessee

A report of prototype vibration and pressure measurements on a fixed blade, axial flow turbine generator unit. Initial measurements on the unmodified unit revealed shaft vibrations whose energy was concentrated in the 9- to 10-cycle per revolution range. This corresponded approximately to the calculated natural frequency of the rotating mass. The cause of these vibrations was apparently a 0.4-cycle per revolution excitation by the draft tube vortex. The runner was modified by adding five guide vanes to the inner head cover and by slightly altering the shape of the leading edges of the blades. These modifications introduced a 4-cycle per revolution pressure variation ahead of the runner with only a minor change in the draft tube vortex motion.

52. Danilov, A. E., 1965, Pul'satsii davleniia v protochnoi chasti bloka agragatov Bratskoi GES

npinonizhennykh (puskovykh) naporakh i sviazannye cnimi nestatsionapnye iavleniia (Surges in the Water Passage of the Unit Blocks of Bratsk Powerplant at Low Heads and the Transient Phenomena Connected with Them), Tr. Koordinats., Soveschanii po gidrotekhn, No. 22, pp 201-209

A report of surging in the Bratsk turbines when operated at a head of 55 to 57 m. The design head is 96 m. The surging was practically eliminated by the addition of air through the turbine shaft. However, with air the efficiency of the units was lowered around 1.5 percent.

53. Hosoi, Y., 1965, Experimental Investigations of Pressure Surge in Draft Tubes of Francis Water Turbines, Hitachi Review, Vol. 14, No. 12

Experimental investigations were made with model turbines and the results analyzed with a simplified mathematical model of the flow conditions. Under these conditions the draft tube surge frequency was shown to be a function of the discharge, speed, and unit head. The surge amplitude was roughly proportional to the product of the angular velocity and the discharge with a constant head. Through manipulation of the simplified mathematical model, the author shows that the surge frequency at which the maximum surge amplitude is present can be given by

$$F = \frac{1}{2}(r_a/R)^2 \frac{N_1}{60}$$

or

$$f \approx \left(\frac{1}{3} \text{ to } \frac{1}{4}\right) \frac{N_1}{60}$$

for typical installations. This agrees with the empirically determined equation of Rheingans.

54. Shramkov, K. A., 1965, Periodicheskaia pul'satsiia davleniia v radial' no-osevykh gidroturbinakh (Periodic Pressure Surges in Francis Hydraulic Turbines), Gidrotekhnicheskoe Stroitel' stvo, No. 7, pp 34-37, U.S. Bureau of Reclamation Translation No. 629, Denver, Colorado

The author identifies two types of pressure surges, one in the spiral case and one in the draft tube. The spiral case surge is that one which has a frequency nearly the same as the rotational speed of the unit. This surge is associated with flow between the head cover and the runner. The second type of surge is caused by rotational flow in the draft tube. For loads between 40 to 85 percent, the surge in the draft tube is transmitted from the pier to the spiral case and penstock. The frequency was found to be a function of rotational speed of the unit (Rheingans formula) and independent of head and tailrace elevation. The draft tube pressure variations were 180° out of phase with the penstock fluctuations.

55. Giraud, H., 1966, Etude detaillee de la comparaison entre essais industriels et modele daus quelques cas bien definis (Detailed Study of Prototype and Model Test Comparisons for a Few Specific Cases), La Houille Blanche, No. 3, pp 299-311

Close agreement was found between model and prototype observations of the size of the vortex underneath the runners. The size of vortex was determined with a probe in the prototype and photographically in the model. The model predicted the prototype output to within plus and minus 1 percent of the maximum output. The author shows the usefulness of models in cavitation studies.

56. Kolychev, V. A. and Lasenko, V. E., 1966, Issledovanie potoka v radial' no-osevoi gidroturbine (Investigation of Flow in Francis Hydraulic Turbines), Izvestiya Vysshikh Vchebnykh Zavedenii (Moskeva) Energetika, No. 2, pp 89-96

The position of the wicket gates relative to the draft tube throat was found to have a significant effect on the velocity distribution in the draft tube. The nonuniformity of the distribution of both the axial and the circumferential components increases as the ratio Do/Di is changed from 1.8 to 1.16. Do is the distance from the centerline of the unit to the axis of the guide vanes and Di is the smallest radius to the inside of the lower wearing ring of the runner.

57. Vuskovic', I. and Velensek, B., 1966, Runner Outlet Vortex Core and Its Influence on

Pulsations in Francis and Propeller Turbine Draft Tube, Symposium on Vibrations in Hydraulic Pumps and Turbines, Institution of Mechanical Engineers, Manchester, England

The authors identify two states of flow in the vortex core. If the pressure within the core is higher than the vapor pressure of water, the core contains only water and is called "hard." Conversely, a "soft" core contains water vapor and exists when the core pressure is less than the vapor pressure of water. The most intense pressure pulsations occur with a hard core. The model tests allege to completely confirm the tests of Dziallas. Ribs mounted in the conical diffuser section of the draft tube and guide vanes below the runner were both found to reduce the efficiency of the unit. A coaxial cylindrical diffuser was found to reduce the pressure surges without an adverse effect on the efficiency. In addition, a significant increase in the frequency of the surges was noted. The diffuser diameter was one-half the draft tube throat diameter.

58. Falvey, H., 1967, Hydraulic Model Studies of the Fontenelle Powerplant Draft Tube and Tailrace, USBR Report No. Hyd-571, Denver, Colorado

Hydraulic model studies of the draft tube at Fontenelle Powerplant show that erosive flow concentrations in the tailrace can be reduced through the use of either a tri-vane flow splitter in the draft tube throat or baffle walls in the draft tube flow passages when water is passed through the facility with the turbine runner removed. The effect of flow splitter length, orientation, and vertical position in reducing flow concentrations is indicated. Baffle dimensions and distances above draft tube invert, as well as forces on the baffles are given.

59. Jansen, W., 1967, Flow Analysis in Francis Water Turbines, Trans ASME, Engr for Power, Vol. 89, Ser A, No. 3

A method is given to compute the velocity distribution in the flow passage between turbine blades through the use of analytical methods. By using certain simplifying assumptions, the velocity distribution on the pressure side and suction side of the blades is obtained. The method includes three-dimensional effects and also allows computation at off-design performance of the runner.

60. Konig, H. B. and Whippen, W. G., 1967, Vibration Problems at Conowingo, Water Power, July, pp 259-260

This report is a description of a severe vibration problem in a turbine unit. The vibrations cracked welds in the draft tube liner and caused extremely noisy operation. The pulsations were eliminated for all gate openings less than best gate (72 percent) by admitting air to the inlet side of the runner blade. Above 73 percent opening another kind of roughness was present which could not be alleviated by air admission to the inlet side of the blades. The specific speed of this unit was higher than that of any other fixed blade turbine installed by the bidder.

61. Shramkov, K. A., 1967, Gidravlicheskii rezonaus v vodovodakh GES (Hydraulic Resonance in the Conduits of Hydroelectric Powerplants), Gidrotekhnicheskoe Stroitel'stvo, No. 2, pp 12-16, U.S. Bureau of Reclamation Translation No. 689, Denver, Colorado

A discussion of investigations made in field units. The frequencies observed in the field were in the range predicted by resonance computations of the penstock based on a simplified theory. The amplitude of the pressure pulsations was found to increase as the submergence of the unit increased.

62. Barkov, N. K., 1968, Vpusk vozdukha i aeratsiia potoka v gidroturbinakh (Air Admission and Flow Aeration in Hydroturbines), Electricheskie Stantsii No. 8, pp 26-29, USBR Working Translation No. 635

Various methods of atmospheric and compressed air admission in hydraulic turbines are briefly described. Presently, atmospheric air is used successfully in hydraulic turbines for (1) filling in the breaks in flow continuity, (2) preventing erratic conditions and dangerous vibration during periods of abnormal flow whirling in the draft tube, and (3) stabilizing flow for partial loading and off-design head operation. Compressed air injection is accomplished by several techniques and practical devices. Compressed air is used to reduce erosive wear in hydraulic turbines due to cavitation. Research shows that air in flow cavities significantly lowers the rate of cavitation damage. It also appears to be highly effective in controlling pressure surging beyond the turbine runner. Further study of air injection is required

to improve the reliability and operation of contemporary hydromachines.

63. Lecher, W. and Baumann, K., 1968, Francis Turbines at Part-Load with High Back Pressure, Paper B4, IAHR Symposium, Lausanne, Switzerland

All Francis turbines show at part-load operation a rotating instability. Thereby, large pressure pulsations in the tailrace system can arise especially with high back pressure and a long tailrace tunnel without surge tank. This phenomenon was observed to a pronounced extent on the Francis turbines of a large pumped storage plant. The influence of different parameters, runner cap forms and of air supply at different places and in different quantities was investigated. With model tests, the conditions of the full-size plant were well reproduced. The investigation of many alternatives led to a solution by which, besides the great reduction of the pulsations, a considerable efficiency increase was obtained. These results were also proved by measurements taken on the prototype. (Author's summary.)

64. Ulith, P., 1968, A Contribution to Influencing the Part-Load Behavior of Francis Turbines by Aeration and σ-Value, Paper No. B1, IAHR Symposium, Lausanne, Switzerland

The amplitude of the pressure fluctuation measured at the draft tube wall is used as a characteristic mangitude to assess turbine draft tube flow. This magnitude depends on the variation of the pressure distribution in the draft tube cross section and, as a result, on the discharge, the σ-value and the airflow. The method of aeration above the vaneless space between guide wheel [wicket gate, sic] and runner is described. The test results obtained on a n_s = 308 [metric, sic] model turbine are indicated. (Author's summary.)

65. Cassidy, J. J., 1969, Experimental Study and Analysis of Draft-Tube Surging, Report No. REC-OCE-69-5, U.S. Bureau of Reclamation, Denver, Colorado

Draft tube surge experiments were conducted with models of draft tubes, using air as the fluid. The occurrence, frequency, and amplitude of surges were correlated with flow and draft tube geometry variables. Studies show that surges arise when angular momentum reaches a critical value relative to linear momentum. Surge frequency and peak-to-peak pressures are independent of viscous effects for Reynolds numbers above 80,000 and are correlated with a dimensionless momentum parameter for a particular draft tube shape. A criterion is given for predicting the surging threshold. Results of the study are applied to analysis of draft tube surging in the Fontenelle and the model of the Hoover replacement runners.

66. Falvey, H. T. and Cassidy, J. J., 1970, Frequency and Amplitude of Pressure Surges Generated by Swirling Flow, IAHR Symposium, Stockholm, Sweden, Transactions, Part 1, Paper E1

Reports on the investigation of swirling flow through straight tubes, conical diffusors, and elbow draft tubes. Frequencies and amplitudes of pressure surges produced by the swirling flow were measured and found to be essentially independent of viscous effects for Reynolds numbers larger than 1×10^5. Dimensionless frequency and pressure parameters as well as the onset of surging were correlated with the parameter $\Omega D/\rho Q^2$ where Ω and Q are, respectively, the fluxes of angular momentum and volume through the tube, D is the tube diameter and ρ is the fluid density. Relative length and shape of the tube were also found to be important.

The results of the study were used to analyze a particular draft tube for potential surging. Using performance data obtained from the model of the turbine and draft tube, a region of surge-free operation was outlined on the efficiency hill for the unit. Comparison was made between measured power swings and the predicted pressure fluctuations in the draft tube.

67. Mollenkopf, G. and Raabe, J., 1970, Measurements of Velocity and Pressure in the Draft Tube of a Francis Turbine, IAHR Symposium, Stockholm, Sweden, Transactions, Part 1, Paper B3

Measurements were made in a draft tube with a hot film probe which defined the instantaneous velocity vector. A Francis model turbine was used whose metric specific speed was 295 rpm. The measurements were made in the presence of a strong spiral vortex at two part-load conditions. The results also indicated that surge frequency

and amplitude could be predicted from scaling laws for a model head range of 2 to 9 meters.

68. Zolotov, L. A., Klabukov, V. M., and Ivanova, G. A., 1970, Flow Dynamic Characteristics Downstream of Hydraulic Turbine Runner and Their Influence on Conditions of Turbine Units Regulation, IAHR Symposium, Stockholm, Sweden, Transaction, Part 1, Paper B2

Discharge and pressure fluctuations in the draft tube were observed. At partial loads the discharge fluctuations reach plus and minus 10 percent of the rated discharge capacity. Whereas, at optimum capacity, the fluctuations are only plus and minus 1 percent. The influence of the discharge fluctuations on pressure fluctuations in the penstock were studied by water-hammer equations. The shape of the pressure wave in the penstock was found to be strongly dependent upon the time at which the draft tube disturbance occurred in the wicket gate closing cycle.

7-1750 (3-71)
Bureau of Reclamation

CONVERSION FACTORS—BRITISH TO METRIC UNITS OF MEASUREMENT

The following conversion factors adopted by the Bureau of Reclamation are those published by the American Society for Testing and Materials (ASTM Metric Practice Guide, E 380-68) except that additional factors (*) commonly used in the Bureau have been added. Further discussion of definitions of quantities and units is given in the ASTM Metric Practice Guide.

The metric units and conversion factors adopted by the ASTM are based on the "International System of Units" (designated SI for Systeme International d'Unites), fixed by the International Committee for Weights and Measures; this system is also known as the Giorgi or MKSA (meter-kilogram (mass)-second-ampere) system. This system has been adopted by the International Organization for Standardization in ISO Recommendation R-31.

The metric technical unit of force is the kilogram-force; this is the force which, when applied to a body having a mass of 1 kg, gives it an acceleration of 9.80665 m/sec/sec, the standard acceleration of free fall toward the earth's center for sea level at 45 deg latitude. The metric unit of force in SI units is the newton (N), which is defined as that force which, when applied to a body having a mass of 1 kg, gives it an acceleration of 1 m/sec/sec. These units must be distinguished from the (inconstant) local weight of a body having a mass of 1 kg, that is, the weight of a body is that force with which a body is attracted to the earth and is equal to the mass of a body multiplied by the acceleration due to gravity. However, because it is general practice to use "pound" rather than the technically correct term "pound-force," the term "kilogram" (or derived mass unit) has been used in this guide instead of "kilogram-force" in expressing the conversion factors for forces. The newton unit of force will find increasing use, and is essential in SI units.

Where approximate or nominal English units are used to express a value or range of values, the converted metric units in parentheses are also approximate or nominal. Where precise English units are used, the converted metric units are expressed as equally significant values.

Table I

QUANTITIES AND UNITS OF SPACE

Multiply	By	To obtain
	LENGTH	
Mil	25.4 (exactly)	Micron
Inches	25.4 (exactly)	Millimeters
Inches	2.54 (exactly)*	Centimeters
Feet	30.48 (exactly)	Centimeters
Feet	0.3048 (exactly)*	Meters
Feet	0.0003048 (exactly)*	Kilometers
Yards	0.9144 (exactly)	Meters
Miles (statute)	1,609.344 (exactly)*	Meters
Miles	1.609344 (exactly)	Kilometers
	AREA	
Square inches	6.4516 (exactly)	Square centimeters
Square feet	*929.03	Square centimeters
Square feet	0.092903	Square meters
Square yards	0.836127	Square meters
Acres	*0.40469	Hectares
Acres	*4,046.9	Square meters
Acres	*0.0040469	Square kilometers
Square miles	2.58999	Square kilometers
	VOLUME	
Cubic inches	16.3871	Cubic centimeters
Cubic feet	0.0283168	Cubic meters
Cubic yards	0.764555	Cubic meters
	CAPACITY	
Fluid ounces (U.S.)	29.5737	Cubic centimeters
Fluid ounces (U.S.)	29.5729	Milliliters
Liquid pints (U.S.)	0.473179	Cubic decimeters
Liquid pints (U.S.)	0.473166	Liters
Quarts (U.S.)	*946.358	Cubic centimeters
Quarts (U.S.)	*0.946331	Liters
Gallons (U.S.)	*3,785.43	Cubic centimeters
Gallons (U.S.)	3.78543	Cubic decimeters
Gallons (U.S.)	3.78533	Liters
Gallons (U.S.)	*0.00378543	Cubic meters
Gallons (U.K.)	4.54609	Cubic decimeters
Gallons (U.K.)	4.54596	Liters
Cubic feet	28.3160	Liters
Cubic yards	*764.55	Liters
Acre-feet	*1,233.5	Cubic meters
Acre-feet	*1,233,500	Liters

Table II

QUANTITIES AND UNITS OF MECHANICS

Multiply	By	To obtain
MASS		
Grains (1/7,000 lb)	64.79891 (exactly)	Milligrams
Troy ounces (480 grains)	31.1035	Grams
Ounces (avdp)	28.3495	Grams
Pounds (avdp)	0.45359237 (exactly)	Kilograms
Short tons (2,000 lb)	907.185	Kilograms
Short tons (2,000 lb)	0.907185	Metric tons
Long tons (2,240 lb)	1,016.05	Kilograms
FORCE/AREA		
Pounds per square inch	0.070307	Kilograms per square centimeter
Pounds per square inch	0.689476	Newtons per square centimeter
Pounds per square foot	4.88243	Kilograms per square meter
Pounds per square foot	47.8803	Newtons per square meter
MASS/VOLUME (DENSITY)		
Ounces per cubic inch	1.72999	Grams per cubic centimeter
Pounds per cubic foot	16.0185	Kilograms per cubic meter
Pounds per cubic foot	0.0160185	Grams per cubic centimeter
Tons (long) per cubic yard	1.32894	Grams per cubic centimeter
MASS/CAPACITY		
Ounces per gallon (U.S.)	7.4893	Grams per liter
Ounces per gallon (U.K.)	6.2362	Grams per liter
Pounds per gallon (U.S.)	119.829	Grams per liter
Pounds per gallon (U.K.)	99.779	Grams per liter
BENDING MOMENT OR TORQUE		
Inch-pounds	0.011521	Meter-kilograms
Inch-pounds	1.12985×10^6	Centimeter-dynes
Foot-pounds	0.138255	Meter-kilograms
Foot-pounds	1.35582×10^7	Centimeter-dynes
Foot-pounds per inch	5.4431	Centimeter-kilograms per centimeter
Ounce-inches	72.008	Gram-centimeters
VELOCITY		
Feet per second	30.48 (exactly)	Centimeters per second
Feet per second	0.3048 (exactly)*	Meters per second
Feet per year	$*0.965873 \times 10^{-6}$	Centimeters per second
Miles per hour	1.609344 (exactly)	Kilometers per hour
Miles per hour	0.44704 (exactly)	Meters per second
ACCELERATION*		
Feet per second^2	*0.3048	Meters per second^2
FLOW		
Cubic feet per second (second-feet)	*0.028317	Cubic meters per second
Cubic feet per minute	0.4719	Liters per second
Gallons (U.S.) per minute	0.06309	Liters per second
FORCE*		
Pounds	*0.453592	Kilograms
Pounds	*4.4482	Newtons
Pounds	$*4.4482 \times 10^5$	Dynes

Table II—Continued

Multiply	By	To obtain
WORK AND ENERGY*		
British thermal units (Btu)	*0.252	Kilogram calories
British thermal units (Btu)	1,055.06	Joules
Btu per pound	2.326 (exactly)	Joules per gram
Foot-pounds	*1.35582	Joules
POWER		
Horsepower	745.700	Watts
Btu per hour	0.293071	Watts
Foot-pounds per second	1.35582	Watts
HEAT TRANSFER		
Btu in./hr ft^2 degree F (k, thermal conductivity)	1.442	Milliwatts/cm degree C
Btu in./hr ft^2 degree F (k, thermal conductivity)	0.1240	Kg cal/hr m degree C
Btu ft/hr ft^2 degree F	*1.4880	Kg cal m/hr m^2 degree C
Btu/hr ft^2 degree F (C, thermal conductance)	0.568	Milliwatts/cm^2 degree C
Btu/hr ft^2 degree F (C, thermal conductance)	4.882	Kg cal/hr m^2 degree C
Degree F hr ft^2/Btu (R, thermal resistance)	1.761	Degree C cm^2/milliwatt
Btu/lb degree F (c, heat capacity)	4.1868	J/g degree C
Btu/lb degree F	*1.000	Cal/gram degree C
Ft^2/hr (thermal diffusivity)	0.2581	Cm^2/sec
Ft^2/hr (thermal diffusivity)	*0.09290	M^2/hr
WATER VAPOR TRANSMISSION		
Grains/hr ft^2 (water vapor) transmission)	16.7	Grams/24 hr m^2
Perms (permeance)	0.659	Metric perms
Perm-inches (permeability)	1.67	Metric perm-centimeters

Table III

OTHER QUANTITIES AND UNITS

Multiply	By	To obtain
Cubic feet per square foot per day (seepage)	*304.8	Liters per square meter per day
Pound-seconds per square foot (viscosity)	*4.8824	Kilogram second per square meter
Square feet per second (viscosity)	*0.092903	Square meters per second
Fahrenheit degrees (change)*	5/9 exactly	Celsius or Kelvin degrees (change)*
Volts per mil	0.03937	Kilovolts per millimeter
Lumens per square foot (foot-candles)	10.764	Lumens per square meter
Ohm-circular mils per foot	0.001662	Ohm-square millimeters per meter
Millicuries per cubic foot	*35.3147	Millicuries per cubic meter
Milliamps per square foot	*10.7639	Milliamps per square meter
Gallons per square yard	*4.527219	Liters per square meter
Pounds per inch	*0.17858	Kilograms per centimeter

GPO 839-626

ABSTRACT

A literature survey and a review of material related to draft tube surges is presented. The literature survey consists of an annotated bibliography of 68 articles published between 1910 and 1970. The review is restricted to three major areas: experiments with elementary models, experiments with model and prototype turbines, and field expedients to reduce surging. Velocity distributions and surge frequencies are given special attention in the first two areas. Present knowledge is sufficient for predicting the order of magnitude of draft tube surge frequencies and relative surge amplitudes. Additional studies are needed to refine prediction methods and to extend their scope to include pumps and pump-turbines. Model testing at full prototype heads is apparently not required to investigate draft tube surging. Has 68 references.

ABSTRACT

A literature survey and a review of material related to draft tube surges is presented. The literature survey consists of an annotated bibliography of 68 articles published between 1910 and 1970. The review is restricted to three major areas: experiments with elementary models, experiments with model and prototype turbines, and field expedients to reduce surging. Velocity distributions and surge frequencies are given special attention in the first two areas. Present knowledge is sufficient for predicting the order of magnitude of draft tube surge frequencies and relative surge amplitudes. Additional studies are needed to refine prediction methods and to extend their scope to include pumps and pump-turbines. Model testing at full prototype heads is apparently not required to investigate draft tube surging. Has 68 references.

ABSTRACT

A literature survey and a review of material related to draft tube surges is presented. The literature survey consists of an annotated bibliography of 68 articles published between 1910 and 1970. The review is restricted to three major areas: experiments with elementary models, experiments with model and prototype turbines, and field expedients to reduce surging. Velocity distributions and surge frequencies are given special attention in the first two areas. Present knowledge is sufficient for predicting the order of magnitude of draft tube surge frequencies and relative surge amplitudes. Additional studies are needed to refine prediction methods and to extend their scope to include pumps and pump-turbines. Model testing at full prototype heads is apparently not required to investigate draft tube surging. Has 68 references.

ABSTRACT

A literature survey and a review of material related to draft tube surges is presented. The literature survey consists of an annotated bibliography of 68 articles published between 1910 and 1970. The review is restricted to three major areas: experiments with elementary models, experiments with model and prototype turbines, and field expedients to reduce surging. Velocity distributions and surge frequencies are given special attention in the first two areas. Present knowledge is sufficient for predicting the order of magnitude of draft tube surge frequencies and relative surge amplitudes. Additional studies are needed to refine prediction methods and to extend their scope to include pumps and pump-turbines. Model testing at full prototype heads is apparently not required to investigate draft tube surging. Has 68 references.

REC-ERC-71-42
Falvey, H T
DRAFT TUBE SURGES—A REVIEW OF PRESENT KNOWLEDGE AND AN ANNOTATED BIBLIOGRAPHY
Bur Reclam Rep REC-ERC-71-42, Div Gen Res, Dec 1971. Bureau of Reclamation, Denver, 25 p, 7 fig, 68 ref

DESCRIPTORS—/ *draft tubes/ *turbines/ *surges/ *hydroelectric powerplants/ hydraulic machinery/ fluid mechanics/ unsteady flow/ laboratory tests/ model tests/ fluid flow/ non-uniform flow/ vortices/ bibliographies/ annotations/ velocity distribution/ amplitude/ air admission/ frequency
IDENTIFIERS—/ hydrodynamic stability

REC-ERC-71-42
Falvey, H T
DRAFT TUBE SURGES—A REVIEW OF PRESENT KNOWLEDGE AND AN ANNOTATED BIBLIOGRAPHY
Bur Reclam Rep REC-ERC-71-42, Div Gen Res, Dec 1971. Bureau of Reclamation, Denver, 25 p, 7 fig, 68 ref

DESCRIPTORS—/ *draft tubes/ *turbines/ *surges/ *hydroelectric powerplants/ hydraulic machinery/ fluid mechanics/ unsteady flow/ laboratory tests/ model tests/ fluid flow/ non-uniform flow/ vortices/ bibliographies/ annotations/ velocity distribution/ amplitude/ air admission/ frequency
IDENTIFIERS—/ hydrodynamic stability

REC-ERC-71-42
Falvey, H T
DRAFT TUBE SURGES—A REVIEW OF PRESENT KNOWLEDGE AND AN ANNOTATED BIBLIOGRAPHY
Bur Reclam Rep REC-ERC-71-42, Div Gen Res, Dec 1971. Bureau of Reclamation, Denver, 25 p, 7 fig, 68 ref

DESCRIPTORS—/ *draft tubes/ *turbines/ *surges/ *hydroelectric powerplants/ hydraulic machinery/ fluid mechanics/ unsteady flow/ laboratory tests/ model tests/ fluid flow/ non-uniform flow/ vortices/ bibliographies/ annotations/ velocity distribution/ amplitude/ air admission/ frequency
IDENTIFIERS—/ hydrodynamic stability

REC-ERC-71-42
Falvey, H T
DRAFT TUBE SURGES—A REVIEW OF PRESENT KNOWLEDGE AND AN ANNOTATED BIBLIOGRAPHY
Bur Reclam Rep REC-ERC-71-42, Div Gen Res, Dec 1971. Bureau of Reclamation, Denver, 25 p, 7 fig, 68 ref

DESCRIPTORS—/ *draft tubes/ *turbines/ *surges/ *hydroelectric powerplants/ hydraulic machinery/ fluid mechanics/ unsteady flow/ laboratory tests/ model tests/ fluid flow/ non-uniform flow/ vortices/ bibliographies/ annotations/ velocity distribution/ amplitude/ air admission/ frequency
IDENTIFIERS—/ hydrodynamic stability