IRRIGATION AND DRAINAGE
Irrig. and Drain. **52**: 355–361 (2003)
Published online in Wiley InterScience (www.interscience.wiley.com). **DOI**: 10.1002/ird.102

ACCURATE WATER DELIVERY USING A SIMPLIFIED AUTOMATED FARM TURNOUT†‡

BLAIR L. STRINGAM,[1]* BRIAN W. SAUER[2] AND CLIFFORD A. PUGH[3]

[1] *Agricultural Operations Technology, Montana State University, Bozeman, Montana, USA*
[2] *US Bureau of Reclamation, Snake River Area Office, Boise, Idaho, USA*
[3] *US Bureau of Reclamation, Water Resources Research Laboratory, Denver, Colorado, USA*

ABSTRACT

A simplified automated farm turnout was designed to maintain constant turnout flowrates from canal delivery systems to individual farm fields. Off-the-shelf components were combined to fabricate this device. The cost of all the components totaled less than $2300. All of these components work together to maintain turnout flowrates to the specified amount plus or minus 3% error. These turnouts are recommended for canal systems where the canal levels typically fluctuate throughout the day. Four of these automated turnouts have been installed; three on farms near Boise, Idaho, and one in Yuma, Arizona. Published in 2003 by John Wiley & Sons, Ltd.

KEY WORDS: irrigation; automation; canal automation

RÉSUMÉ

Un déversoir simple et automatisé a été conçu pour fournir à partir d'un canal un apport constant d'eau pour l'irrigation à la parcelle. Plusieurs composants facilement disponibles ont été combinés à cet effet. Le coût total de ces composants est inférieur à 2300 US$. Ces composants fonctionnent de manière intégrée pour fournir un débit avec une précision de plus ou moins 3%. Ce déversoir est recommandé pour les systèmes où les niveaux d'eau varient en cours de journée. Quatre de ces déversoirs automatisés ont déjà été installés aux Etats-Unis, trois dans des exploitations situées près de Boise dans l'Idaho, un près de Yuma dans l'Arizona. Published in 2003 by John Wiley & Sons, Ltd.

MOTS CLÉS: irrigation; automatisation; automatisation de canaux

INTRODUCTION

Irrigation demands, environmental concerns, and urban growth continue to fuel the need for efficient operation of water delivery systems. In many river systems, in-stream flow requirements are being increased to preserve wildlife, aquatic ecology, and the surrounding habitat. In irrigation districts, water management is becoming more challenging as irrigators realize that crop yields can be maximized if sufficient amounts of water can be delivered at the proper time.

As irrigation districts try to be more responsive to water users, they are finding that water losses are increasing and the canal systems are becoming harder to manage. Supply and lateral canals are often subject to water level and

* Correspondence to: B. L. Stringam, Agricultural Operations Technology, Montana State University, 333 Leon Johnson Hall, Bozeman, MT 59717, USA. E-mail: blairs@montana.edu
† La diversion exacte de l'eau par un déversoir simplifié et automatisé pour la ferme.

Received 22 November 2002
Revised 28 June 2003
Accepted 29 July 2003

Published in 2003 by John Wiley & Sons, Ltd.

turnout delivery fluctuations. These fluctuations and losses are due to the fact that the canal systems were originally designed for rigid delivery schedules. The consequence of these fluctuations is that individual farms receive too little or too much water. These flow variations can reduce crop yields, damage soil, and waste water.

Understanding that canal system fluctuations will occur, tools can be provided that minimize this problem. If farm turnouts automatically adjust to maintain constant deliveries, irrigation districts can be much more responsive to user demand changes. If the amount of water delivered to the turnout can closely match the demand, administrative spills and delivery shortages will be reduced.

BACKGROUND

Recent work at the US Bureau of Reclamation Water Resources Research Laboratory (WRRL) has focused on the development and testing of a simplified device that can be used by irrigation districts and farmers to regulate diverted water to individual farm turnouts. This automated farm turnout (AFT) consists of components that can be used to maintain a near constant delivery to individual farm fields. The individual components need to be robust because western irrigation districts are subject to environmental conditions that are harsh on automation equipment (Stringam *et al.*, 1999). The canal environment subjects electrical equipment to heat, humidity, debris, vegetation, dust, lightning, and vandalism. The automation equipment must endure these conditions and still be reliable and accurate. Presently, few farm turnouts are automated because there are few reliable components that are available for a reasonable cost.

INSTRUMENTATION UNDER INVESTIGATION

The AFT consists of three primary components as well as peripheral measurement devices. These components include a linear actuator, a turnout gate, and a control unit (a control unit is a device that is composed of a central processing unit or CPU, analog to digital converter, and other electronics). Several control units were considered for this application with costs ranging from $100 to $2000. The lower-cost units require additional components including an LCD screen and switches as well as additional fabrication costs. The total price of the less expensive control units with the additional fabrication costs came to about $300. When these controllers were tested, they exhibited some minor compiler problems and it was feared that these problems would escalate in the field. The most expensive control units suited the application, but they were not selected because of their higher cost. A controller that cost about $420 was finally chosen for this application (Figure 1).

A lower-cost industrial process controller was selected for this application. The controller can be programed in C and assembly languages. It is manufactured with a built-in LCD and keypad which minimized fabrication and assembly costs. The LCD and keypad give the operator the capability of displaying flow rates, displaying total amounts of diverted water, and changing flow set points. The control unit is programed to receive feedback from a water-level sensor which is located downstream of the turnout control gate. It also receives feedback from a gate position sensor. Various types of sensors will work with this device; all that is required is that the sensor outputs a voltage or current signal.

The prototype AFT, which was assembled and tested in the laboratory, used an inexpensive submersible pressure transducer, but other water-level sensors can be used. In the initial development stages, a string transducer, with an attached float, was used to sense water level. This type of sensor had problems detecting small changes in water level that resulted from small changes in flow rate. This was due to the hysteresis that is often exhibited by string transducers. In order to avoid hysteresis problems, a pressure transducer was substituted for the string transducer. At first an inexpensive, nonsubmersible pressure transducer was selected and mounted in a PVC pipe to protect the transducer from contact with the water (Stringam and Frizell, 2000). This transducer had a large operating range and was not sensitive enough to measure small water-level changes. Subsequently, a submersible pressure transducer was selected for the application. The submersible transducer cost less than $270 and is ideal for the AFT. Although the submersible transducer works well for the AFT, other water-level sensors may also be used such as a bubbler or ultrasonic sensor. All that is required is that these sensors output a signal (4–20 mA or 0–5 Vdc) that is compatible with the control unit (Figure 2).

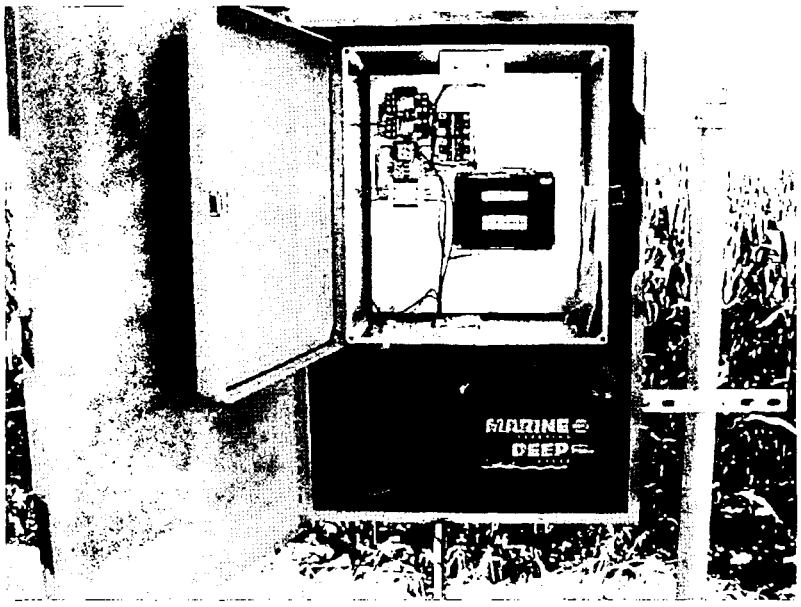

Figure 1. Control box showing CPU, interface electronics, and battery

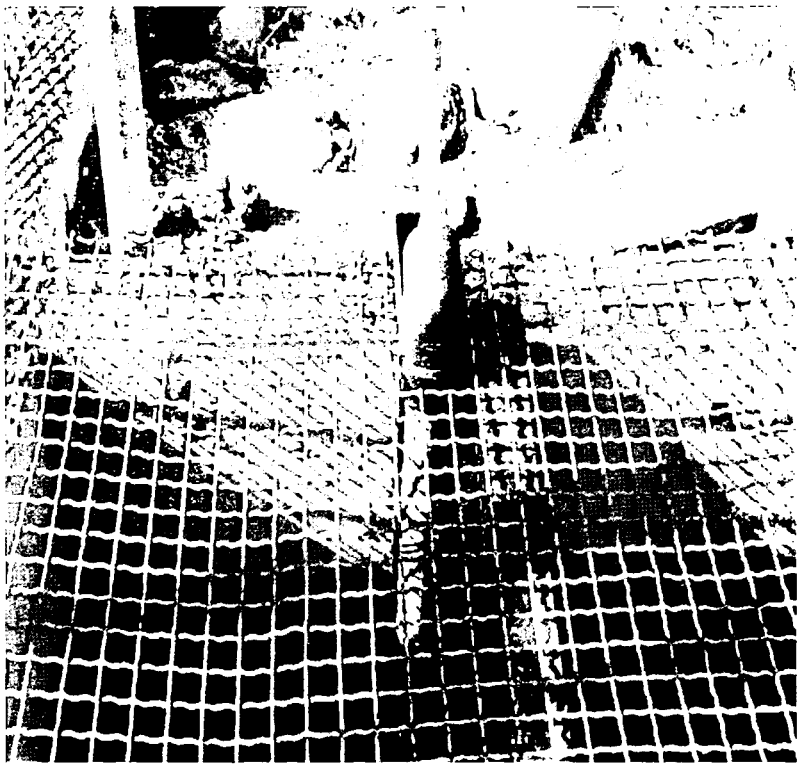

Figure 2. PVC pipe used to mount the water level sensor. This pipe has the nonsubmersible sensor, but it will be replaced with a submersible sensor in the future

A prefabricated ramp flume was used for flow measurement with the prototype AFT. This flume has a variety of flow capacities depending on the positioning of the crest. Although a ramp flume was used with the prototype system, other structures may also be used to measure flow rate or the control unit can be programed to control a downstream water level.

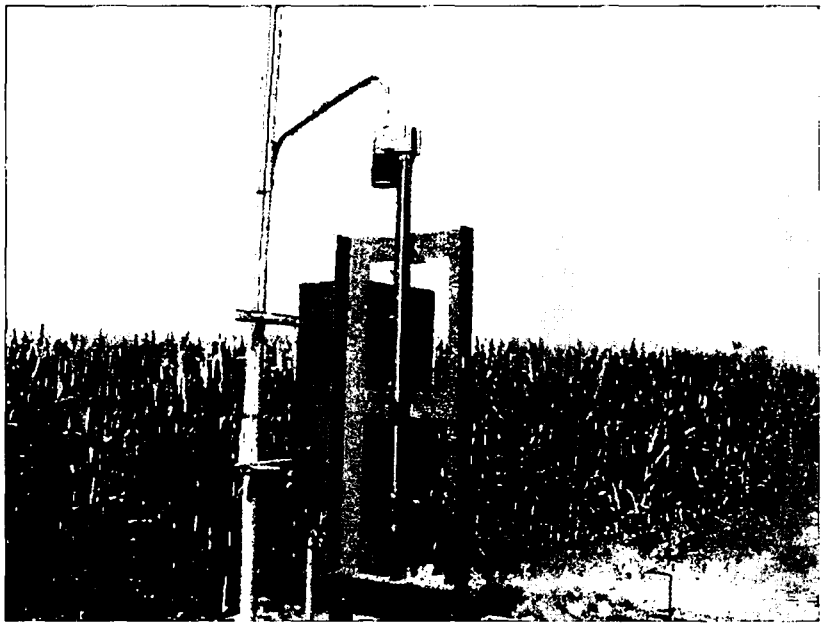

Figure 3. The linear actuator that is used to move the turnout gate. This turnout uses a waterman gate

The turnout gate used on the prototype AFT was a simple gate manufactured by a company in Arizona. The original gate was fabricated with a simple hand crank, but it was easily modified to accommodate a linear actuator. The hand crank was left on the AFT because it gave a good visual indication that the gate is moving and it can also be used to provide backup operation in case the linear actuator fails to operate. If the linear actuator fails, two bolts can be removed and the hand operator can be used to move the gate.

The actuator is a mass-produced product that was originally designed to move satellite dishes (Figure 3). It is relatively inexpensive, readily available, and has limit switches and a position sensor mounted internally. This reduces the cost of the AFT because fabrication costs are reduced and additional components are not required. This actuator has a maximum operating span of 0.6 m and can exert an operating force of 273 kg. It has been well suited for the application because all of the sites have gate movements that are less than 0.6 m.

The controller and the gate actuator require a power source which in many cases can be satisfied with a solar panel and battery. A 45 W solar panel was selected for the field demonstration systems and so far seems to meet the power requirements. A 12 Vdc, 100 Ah deep cycle battery was selected to store energy for night-time operation or for operating on a cloudy day. A voltage regulator was added to the system to prevent the solar panel from overcharging the battery. If AC power is readily available at the site, this could be used instead of solar power. The cost of an AC to DC power converter is significantly lower than purchasing a solar panel; however, a DC battery is still recommended for this type of power supply to insure operation if the AC power supply is interrupted. A breakdown of the estimated AFT costs can be seen in Table I.

In order for the controller to operate the gate, other electrical components are required including relays, manual switches, and terminal blocks. The relays allow signals from the controller to operate the actuator, while the manual switches allow the operator to override the controller and manually move the gate (Figure 4). The terminal blocks are used to make connections between the different components. The controller and electrical devices are housed in a standard fiberglass NEMA 4 weatherproof enclosure which is available from numerous vendors.

FIELD SITES

In addition to the prototype system, four demonstration AFTs were developed and installed at three field sites near Boise, Idaho and one in Yuma, Arizona. The farmers that receive irrigation deliveries at these sites, fabricated mounting hardware so that an actuator could be mounted on existing turnout gates. The actuator mounting

Table I. Parts cost for the AFT

	Estimated parts cost
Gate	$250
Controller (CPU)	$420
Flume	$500
Water-level sensor	$300
Linear actuator	$160
Control box and electrical parts	$250
Solar panel and voltage regulator	$350
Battery	$100
Total parts cost	$2280

Note: It is estimated that 2 person days would be required for installation.

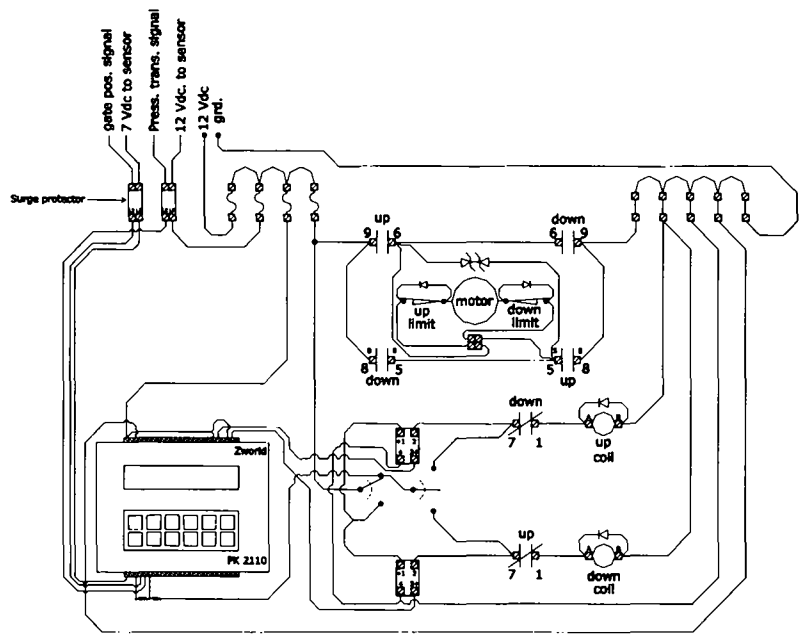

Figure 4. Wiring diagram for the AFT

mechanism was simple and easy to construct for these gates. It is believed that it will be compatible with the majority of turnout slide gates.

Two of the three field sites near Boise control water using a flow measurement structure while the third controls water level in the ditch. The flow measurement devices used in the field demonstrations included a sheet metal ramp flume and a Cipolletti weir. If there are no backwater effects due to downstream checks or other controls, the water level can be a relatively accurate indication of flow rate.

The AFT that was installed near Yuma, Arizona controls water that is diverted into a lateral canal. Water is measured in this canal with a ramp flume. The gate that was already in place was used for this site and a larger actuator was required.

AFT OPERATION

The controller operates using a continuous-loop control program. The controller performs its designed task by first taking a water-level reading from the downstream sensor and computing a flow rate. The controller then compares

the computed flow rate or water level against the desired rate or level and determines the difference or error between the two. If there is a substantial difference, the controller estimates a compensating gate movement using a proportional-integral (PI) control algorithm. The gate is then adjusted to bring the flow rate or water level back to the desired value. After the controller makes the gate adjustment, it waits for a period of time and repeats the control operation. The controller repeats the above procedure until the flow or water-level set point is maintained within a predetermined deadband.

The control set point is manually entered into the CPU by pressing one of the buttons on the keypad. When the proper button is pressed, the LCD prompts the operator to enter the desired flow-rate set-point value. The set-point is increased or decreased by pressing the up–down arrows on the keypad. Once the desired value is entered, the operator must then press the run key. At this point, the CPU resumes its automatic control function.

The control routine also has the capability of detecting problems such as bad sensors or nonfunctioning gate actuators. If this happens, the automatic control function is stopped and an error is displayed on the LCD.

The turnout flow rate varied from the desired value by as much as 3%. This occurred when there were fluctuations in the supply canal and the AFT was in the process of compensating for differences. For most of the steady state operation, the difference between the desired and actual flow rate was less than 1%.

FIELD SITE TESTING

The AFTs that were installed on three farm turnouts near Boise, Idaho (Figure 5) were tested through the latter half of the 2000 irrigation season. An additional AFT was installed in Yuma, Arizona in the spring of 2001. So far, all system components have functioned properly in the intense summer heat as well as the humidity and dust. The AFTs were left in the field during the nonirrigation season to see how well they endure the winter months. Plans are underway to install this device on other farm turnouts to determine its ability to operate in a variety of canal environments. All of the farmers involved appear to be comfortable with the technology and are capable of maintaining most of the components in the system. It also appears to be beneficial to have the farmers participate in the installation so that they are familiar with the system and how it works.

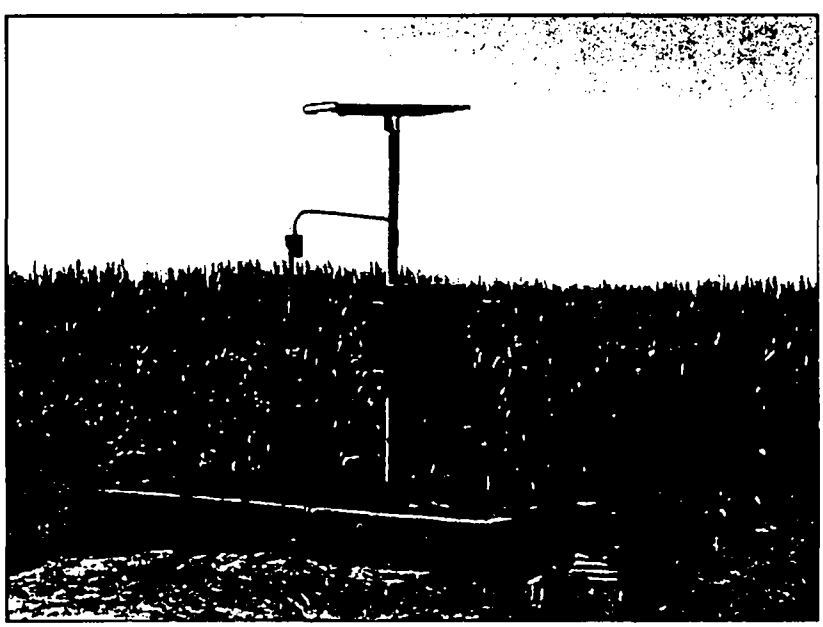

Figure 5. The complete AFT unit. The gate diverts water to the right over a Cipolletti Weir. The water then runs down the vertical culvert into a piping system