PAP-812

[redacted]

AMERICAN SOCIETY OF CIVIL ENGINEERS
33 WEST 39TH STREET, NEW YORK, N. Y.

Morning-Glory Shaft Spillways

A Symposium

Paper No. 2802
Reprinted from TRANSACTIONS, Vol. 121, 1956, p. 311

AMERICAN SOCIETY OF CIVIL ENGINEERS

Founded November 5, 1852

TRANSACTIONS

Paper No. 2802

MORNING-GLORY SHAFT SPILLWAYS

A SYMPOSIUM

PROTOTYPE BEHAVIOR

By Joseph N. Bradley,[1] M. ASCE

With Discussion by Messrs. Bernard Donelan, Donald S. Walter, Fred W. Blaisdell, Rodolfo E. Ballester, John Wallace Ridley, and Joseph N. Bradley

Synopsis

According to available records, the first morning-glory shaft spillway was completed in 1896, but the design did not come into general use until the latter part of the 1920's. Since then, approximately thirty spillways of this type have been completed or are under construction (as of 1955). As less than 30 years have elapsed since completion of the first spillway, it has not been until recently that a morning-glory spillway of any size has operated. Thus the spillway designer has been forced to rely entirely on theory and the results of model studies. Unfortunately, model studies do not solve all the problems involved, and therefore an investigation was begun in 1950 to collect information from spillways which have operated; the results of this investigation are presented herein.

Introduction

A morning-glory shaft spillway consists of (*a*) a collecting structure or morning-glory, (*b*) a vertical shaft or an inclined shaft, and (*c*) a horizontal tunnel. Usually a vertical rather than an inclined shaft is used, and this is connected to the horizontal tunnel through a sharp 90° bend; there are only two cases on record where inclined shafts have been used. In some cases a stilling basin is constructed at the downstream end of the horizontal tunnel whereas in other cases the horizontal tunnel discharges directly into the river.

The morning-glory spillway may operate with free flow, or, when designed properly, it can operate submerged. For free flow, the discharge characteristics are similar to those for a straight overflow-dam section; that is, an increase in discharge is proportional to the three-halves power of the head. When submerged, the flow characteristics change completely; an increase in discharge is proportional to the square root of the head. If, however, a part of the shaft flows full, the effective head will exceed the head measured above the crest of the morning-glory. After submerged flow commences, a further increase in head on the crest results in a very limited increase in discharge. Thus, if a morning-glory spillway is designed to operate submerged, an additional factor of safety is necessary to guard against the spillway capacity ever being exceeded.

Note.—Published, essentially as printed here, in April, 1954, as *Proceedings-Separate No. 431*. Positions and titles given are those in effect when the paper or discussion was approved for *Transactions*.

[1] Hydr. Engr., Bureau of Reclamation, U. S. Dept. of the Interior, Denver, Colo.

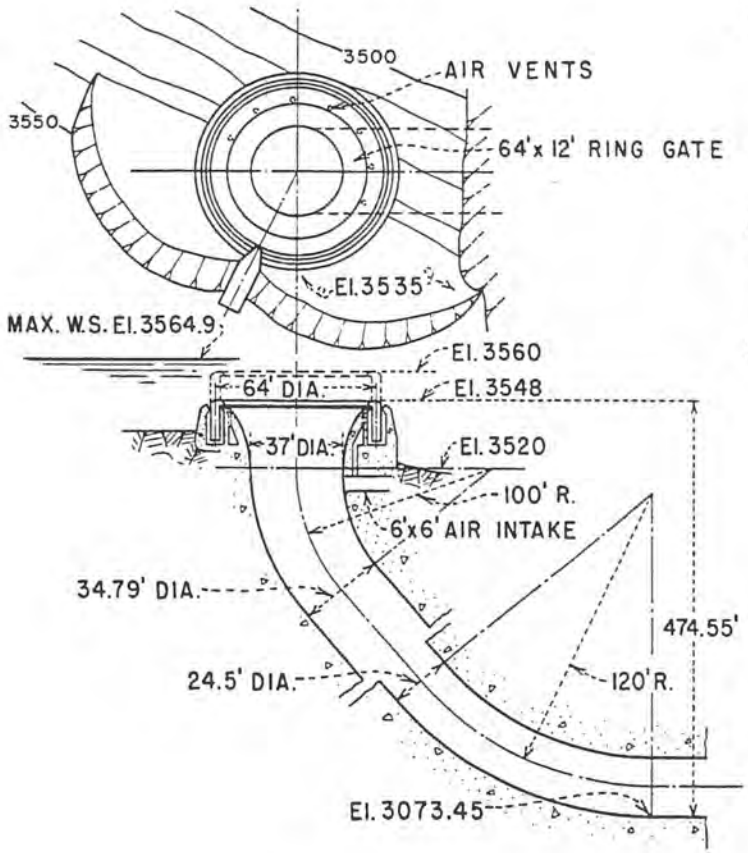

Fig. 1.—Hungry Horse Dam Spillway

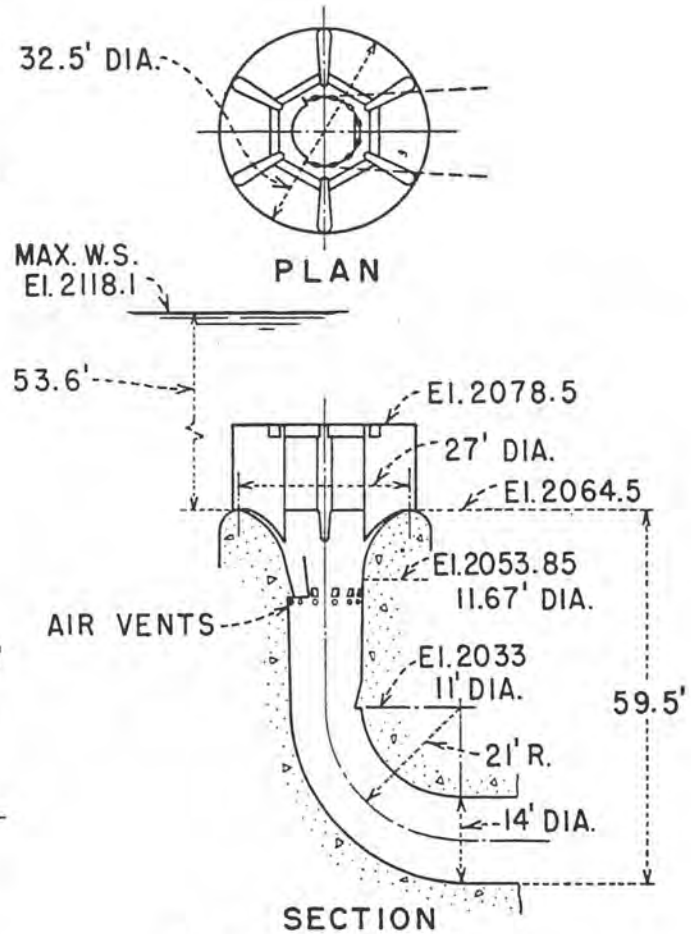

Fig. 2.—Heart Butte Dam Spillway

The morning-glory spillway is attractive in that it can often be constructed at less cost than other types, and it is readily adapted to dams in narrow, steep canyons. Where a diversion tunnel is used to conduct the river around the site during construction, it can also later serve as a part of the spillway tunnel. When designed to operate submerged, this type of spillway is well adapted to flood-retention reservoirs where the downstream flow is to be limited.

The principal difficulty in design has been the fact that, until the 1920's, no morning-glory spillway of any size had operated. Thus, the designer has been faced with the task of designing solely on the basis of theory and model studies. From a hydraulic standpoint, this type of spillway is sound. The questionable factors are structural—namely, will the concrete or other material composing the curved surface of the vertical bend and the horizontal tunnel withstand the effects of the high-velocity water, will ice or debris present difficulties in operation, or will vibration or noise become objectionable?

For the design of the Hungry Horse Dam (Montana) spillway (Fig. 1), which features a total drop of 487 ft from headwater to invert of the horizontal tunnel, and the Heart Butte Dam (North Dakota) spillway (Fig. 2), which consists of a morning-glory designed for submerged flow with as much as 54 ft of head on the crest, the foregoing questions take on added significance. For example, erosion of the tunnel lining in the Hungry Horse Dam spillway at the very high velocities that are contemplated would produce intolerable difficulties both in operation and maintenance. Vibration in the Heart Butte Dam spillway, embedded directly in the earth dam, would also create a serious situation with respect to settlement of both the spillway tunnel and the earth embankment.

In an attempt partly to clarify some of the unanswered design problems in the light of prototype experience, questionnaires were sent out to persons connected with morning-glory shaft spillways. The texts of the questionnaires varied, but these four questions were common to all of them:

1. Has the spillway operated? If so, a log of operation would be appreciated.
2. Has erosion of the concrete been experienced in the shaft, the tunnel, or in the vicinity of the vertical elbow?
3. Has vibration or objectionable noise been noticeable in the structure during operation?
4. Has any difficulty been experienced with the passing of debris or ice?

The response and cooperation received in reply to this inquiry were excellent. In Table 1 there are listed the spillways investigated, their location, reference material where available, and the names of the correspondents contacted.

Basis for Investigation

The purpose of the prototype investigation was, first, to determine the merits or shortcomings of design practice with regard to morning-glory spillways and, second, to learn how the materials composing these structures withstand the forces imposed on them.

TABLE 1.—MORNING-GLORY SHAFT SPILLWAYS

Dam	Location	References to literature	References for correspondence
Owyhee	Owyhee Project—Idaho	"Floating Ring-Gate and Glory-Hole Spillway at Owyhee Dam," by L. G. Smith, *Reclamation Era*, August, 1940, p. 226. "Glory Hole Spillway," by A. P. Connor, *Power Plant Engineering*, November, 1933, p. 482. "Hydraulic Model Studies for the Morning-Glory Spillways at Owyhee and Gibson Dams," by F. C. Lowe, *Hydraulic Laboratory Report 159*, Bureau of Reclamation, U. S. Dept. of the Interior, Denver, Colo.	Regional Director, Bureau of Reclamation, Boise, Idaho
Gibson	Sun River Project—Montana	"Gibson Dam," by B. W. Steels, Dams and Control Works, Bureau of Reclamation, U. S. Dept. of the Interior, Washington, D. C., 1929, p. 79.	Regional Director, Bureau of Reclamation, Billings, Mont.
Sulak	Russia	"Engineering in Foreign Countries," *Engineering News-Record*, October 17, 1935, p. 546.	
Guernsey	North Platte Project—Nebraska	"Guernsey Dam," by W. H. Nalder, Dams and Control Works, Bureau of Reclamation, U. S. Dept. of the Interior, Washington, D. C., 1929, p. 55.	Regional Director, Bureau of Reclamation, Denver, Colo.
Davis Bridge	On Deerfield River near Whitingham, Vt.	"The Hydraulic Design of the Shaft Spillway for Davis Bridge Dam and Hydraulic Tests on Working Models," by Ford Kurtz, *Transactions*, ASCE, Vol. 88, 1925, p. 1.	H. M. Nelson, New England Power Service Co., 441 Stuart St., Boston 16, Mass.
Pleasant Hill	Mohican River near Perrysville, Ohio	"Hydraulic Model Studies for Pleasant Hill Dam," by George Barnes, Case School of Applied Science, Cleveland, Ohio, May, 1935.	Div. Engr., Ohio River Div., Corps of Engineers, U. S. Army, 536 U. S. Post Office Bldg., Cincinnati 1, Ohio
Kingsley	North Platte River near Ogallala, Nebr.	"Hydraulic Model Studies on Keystone Dam" (now Kingsley Dam) by George Barnes, Case School of Applied Science, Cleveland, Ohio, November, 1936.	Chf. Engr., Central Nebraska Public Power and Irrigation District, Hastings, Nebr.
Bouquet Canyon	Bouquet Creek, 50 miles from Los Angeles, Calif.	"Bouquet Canyon Reservoir and Dams," by H. A. Van Norman, *Civil Engineering*, August, 1934, p. 393.	Chf. Engr., Dept. of Water and Power, City of Los Angeles, Los Angeles 54, Calif.
Lady Bower	Derwent River in Derbyshire, England	"Model Results on the Ladybower Spillways," by G. H. Hill, *The Engineer*, London, November 3, 1939, p. 440.	G. H. Hill and Sons, 51 Mosley St., Manchester 2, England
Jubilee	Hong Kong	"Model Experiments on Bellmouth and Siphon-Bellmouth Overflow Spillways," by Geoffrey Morse Binnie, *Journal*, Inst. of C. E., London, November, 1938 and 1939, p. 65.	W. J. E. Binnie, Binnie, Deacon and Gourley, Artillery House, Artillery Row, Victoria St., Westminster, S. W., England

TABLE 1.—(*Continued*)

Dam	Location	References to literature	References for correspondence
Taf Fechan	Wales	"Bellmouth Weirs and Tunnel Outlets for Disposal of Flood Water," by W. J. E. Binnie, *Transactions*, Inst. of Water Engrs., London, England, 1937, p. 103.	W. J. E. Binnie, Binnie, Deacon and Gourley, Artillery House, Artillery Row, Victoria St., Westminster, S. W., England
Silent Valley	Ireland	"Bellmouth Weirs and Tunnel Outlets for Disposal of Flood Water," by W. J. E. Binnie, *Transactions*, Inst. of Water Engrs., 1937, p. 103.	W. J. E. Binnie, Binnie, Deacon and Gourley, Artillery House, Artillery Row, Victoria St., Westminster, S. W., England
Pontian Ketchil	Jahore, Singapore	"Bellmouth Weirs and Tunnel Outlets for Disposal of Flood Water," by W. J. E. Binnie, *Transactions*, Inst. of Water Engrs., 1937, p. 103.	W. J. E. Binnie, Binnie, Deacon and Gourley, Artillery House, Artillery Row, Victoria St., Westminster, S. W., England
Burnhope	Durham County, England	"Bellmouth Weirs and Tunnel Outlets for Disposal of Flood Water," by W. J. E. Binnie, *Transactions*, Inst. of Water Engrs., 1937, p. 103.	W. J. E. Binnie, Binnie, Deacon and Gourley, Artillery House, Artillery Row, Victoria St., Westminster, S. W., England
Manuherikia Falls Dam	New Zealand	"Bellmouth Weirs and Tunnel Outlets for Disposal of Flood Water," by W. J. E. Binnie, *Transactions*, Inst. of Water Engrs., 1937, p. 103.	J. W. Ridley, Hydro-electric Design Office, Ministry of Works, Wellington, New Zealand
Heart Butte	North Dakota	"Morning-Glory Shaft Spillways: Performance Tests of Prototype and Model," by A. J. Peterka, *Transactions*, ASCE, Vol. 121, 1956.	Regional Director, Bureau of Reclamation, Billings, Mont.
Hungry Horse	Montana		Regional Director, Bureau of Reclamation, Boise, Idaho
South Holston	South Holston River, Tennessee		Chf. Engr., Tennessee Valley Authority, Knoxville, Tenn.
Watauga	Watauga River, Tennessee	"Constructing the Watauga Project," by G. K. Leonard and Don H. Mattern, *Civil Engineering*, May, 1948, p. 21.	Chf. Engr., Tennessee Valley Authority, Knoxville, Tenn.
Akongtien	South Taiwan		Y. C. Chu, Engineer in Charge
Lumont	Philippine Islands		Filemon C. Rodriguez, General Manager, National Power Corp., Natividad Building, Manila, Republic of Philippines
La Regadera	Bogotá, Colombia		F. Wiesner Rozo, Superintendent, Acueducto Municipal de Bogotá, Bogotá, Colombia
Shade Hill	South Dakota	"Morning Glory Shaft Spillways-Performance Tests on Prototype and Model," by A. J. Peterka, *Technical Monograph No. 16*, Bureau of Reclamation, U. S. Dept. of the Interior, Denver, Colo., 1954.	Regional Director, Bureau of Reclamation, Billings, Mont.

An incident occurred in 1941 which caused much doubt in the minds of engineers concerning tunnel spillways. The Arizona spillway at Hoover Dam (Arizona-Nevada), which has a fall of approximately 570 ft, was first operated in August, 1941, until December, 1941. The average flow during the 4-month period was 13,500 cu ft per sec. The maximum flow was 38,000 cu ft per sec, which lasted for only a few hours. At the conclusion of operations, an eroded hole 115 ft long, 30 ft wide, and 45 ft below invert grade, was discovered immediately downstream from the vertical bend. The velocity in the horizontal tunnel was approximately 170 ft per sec. The spillway was designed for 200,000 cu ft per sec, so the average flow was only 7% of capacity.[2]

The Hoover Dam spillways are not of the morning-glory type, but the tunnel arrangement is similar to some morning-glory spillways. There are a number of theories as to what actually occurred at Hoover Dam but none is conclusive. Briefly, there was misalinement of the invert of the vertical bend and evidence of cavitation, and the large hole at the base of the inclined shaft was indicative of direct impact and scaling. The Hoover Dam incident has posed the question: If erosion can occur at the base of an inclined shaft, what can be expected in the case of a vertical shaft terminating in a sharp 90° bend?

Investigation

As far as it is possible to determine, there are (as of 1955) approximately thirty true morning-glory spillways either in existence or under construction; only those spillways which have operated will be considered herein. The first spillway of this type was built in 1896 and was designed by James Mansergh for the Blackton Reservoir in England. A second morning-glory spillway was constructed at the Front Reservoir in England in 1908. The remaining spillways have been constructed subsequent to 1926. With the general introduction of model studies in the United States and Europe in the 1920's, designers were able to take a more favorable attitude toward the morning-glory shaft spillway. It is interesting to note that model studies have been performed to aid in the design of almost all the morning-glory spillways dating back to 1926; unfortunately, model studies do not reveal all that is desired.

A record of the morning-glory shaft spillways which have operated is presented subsequently. These are cited in the order of their completion so that one can follow the evolution of design as well as learn of protype operation.

Davis Bridge Dam.—The first morning-glory spillway in the United States was constructed at the Davis Bridge Dam on the Deerfield River near Whitingham, Vt., completed about 1926. This spillway (Fig. 3) was designed for a maximum discharge of 27,000 cu ft per sec, a head on the crest of 8 ft, and a drop of 188 ft from reservoir to invert of horizontal tunnel. This structure has discharged a number of times for short periods. The maximum discharge occurred in the September hurricane flood of 1938 when the water reached 6 ft on the crest. The computed discharge at that time was approximately 19,400 cu ft per sec, or 72% of capacity. The spill during this flood exceeded

[2] "Experiences of the Bureau of Reclamation," by Jacob E. Warnock, *Transactions*, ASCE, Vol. 112, 1947, p. 55.

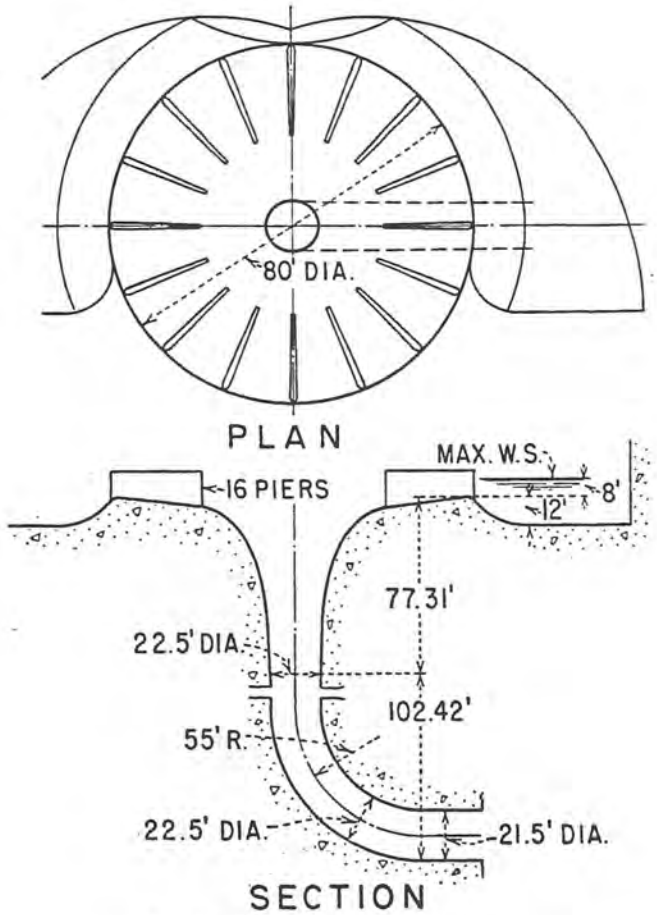

FIG. 3.—DAVIS BRIDGE DAM SPILLWAY

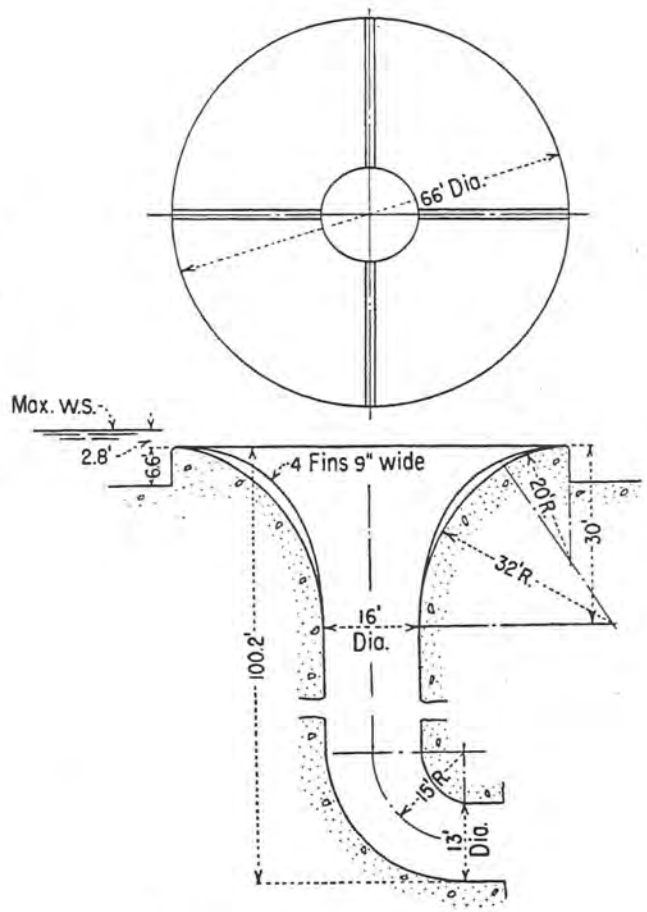

FIG. 4.—TAF FECHAN DAM SPILLWAY

10,000 cu ft per sec for 15 hr. Inspection after the flood showed no appreciable erosion of the concrete in the horizontal part of the tunnel. An erosion pocket 3 ft wide by 6 ft long by 3 in. deep was apparent at the vertical bend, but it was not certain whether this was caused by erosion as a result of the velocity of the water or spalling caused by freezing and thawing of the concrete surfaces. In any event, the repairs were of a minor nature. All ice and debris which passed over the crest between the piers had readily gone through the spillway. Logs and trees 50 ft to 60 ft long were reported to have passed through the spillway at times. The spillway makes some noise when it is in operation, but this can be heard only a short distance from the dam, and vibration appears to be no problem. Sixteen piers on the crest act as an antivortex device.

Taf Fechan Dam.—A morning-glory spillway was completed at the Tef Fechan Dam in Wales in 1927. This spillway (Fig. 4) was designed for a maximum discharge of 3,000 cu ft per sec at a head of 2.8 ft on the crest; the drop is 103 ft. The long sweeping curves of this early design are very suggestive of the morning-glory flower. Correspondence with W. J. E. Binnie, who acted as consultant, indicated that no trouble has been experienced with this spillway and no unusual repairs have been required. It is interesting to note the presence of an antivortex device consisting of four small fins.

Gibson Dam.—The Gibson Dam spillway on the North Fork of the Sun River in Montana, a project of the Bureau of Reclamation, United States Department of the Interior (USBR), was completed in 1930. This structure (Fig. 5) was designed for a maximum discharge of 50,000 cu ft per sec at a head of 20 ft over the crest and a drop of 180 ft. As originally constructed, the spillway had a free crest, but the crest was later altered and six radial gates were installed (Fig. 6).

Prior to 1947, the spillway operated several times. Upon inspection of the tunnel, two areas approximately 2.5 ft by 1.5 ft by 2 in. deep prominently displayed erosion in the vertical bend. During the months of May and June, 1948, a total of 435,000 acre-ft of water flowed through the spillway. The peak flow was 13,100 cu ft per sec, or 26% of capacity. Water passing through the spillway at this time produced additional erosion of the areas cited previously. The areas had increased to 5 ft by 3 ft, exposing several reinforcing bars. The spillway again went into operation in 1949, 1950, and 1951, reaching discharges of 4,500 cu ft per sec, 7,500 cu ft per sec, and 6,000 cu ft per sec, respectively. The tunnel and vertical bend were inspected annually, and the rate at which erosion has occurred has been slow but progressive. Repairs to the extent of patching were scheduled for 1952. Because of the irregular surface of the vertical bend, produced by the rough formwork of this period, it would be unfair to fix the responsibility for this erosion on any one cause.

The invert of the horizontal tunnel also showed wear, but this probably occurred during diversion of the river at the time of construction. No ice has passed through the spillway, but large trees have passed through during flood season causing no apparent damage. Noise was reported to have been considerable, increasing with the discharge, but this was not particularly objec-

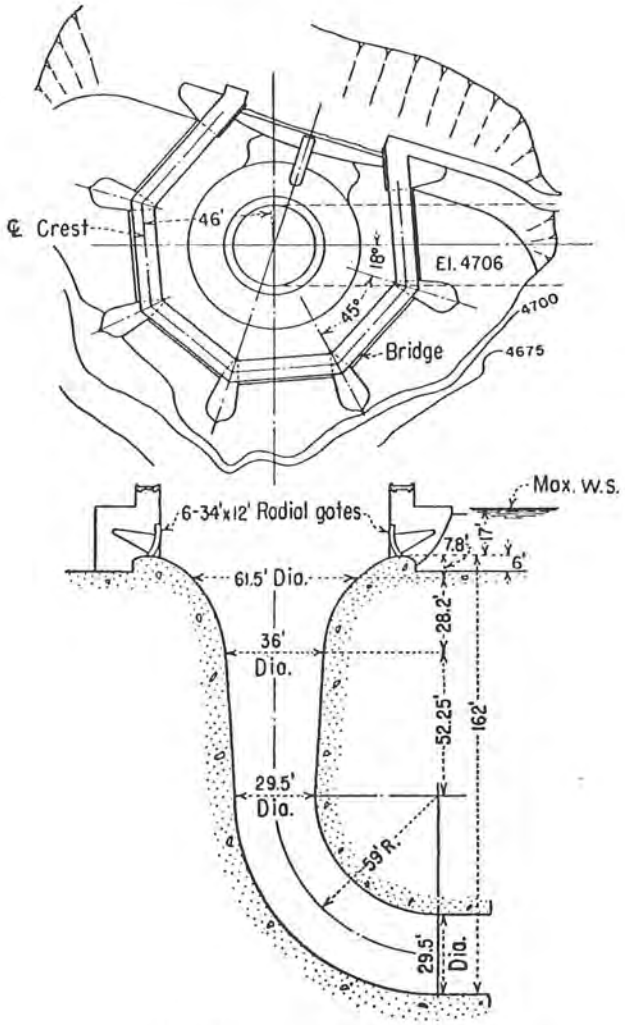

FIG. 5.—GIBSON DAM SPILLWAY

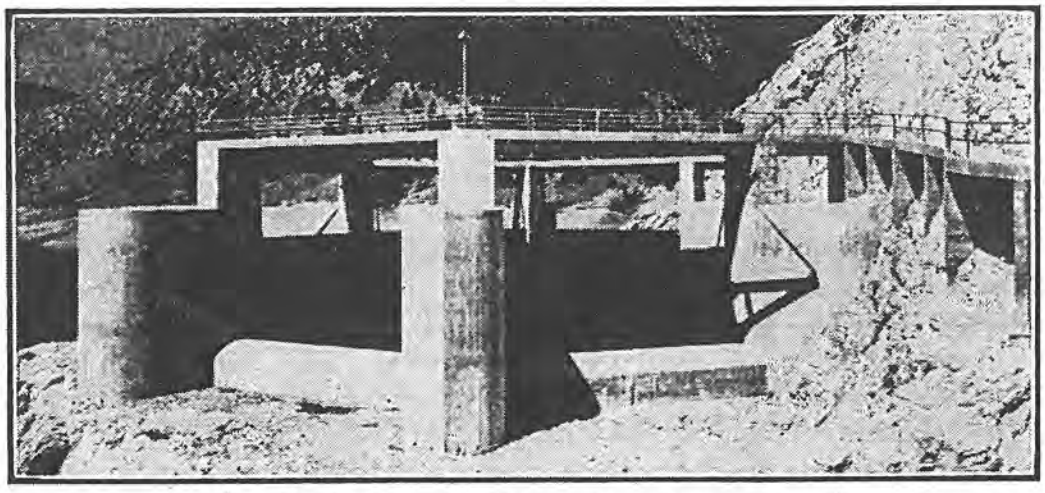

FIG. 6.—GIBSON DAM SPILLWAY GATE STRUCTURE

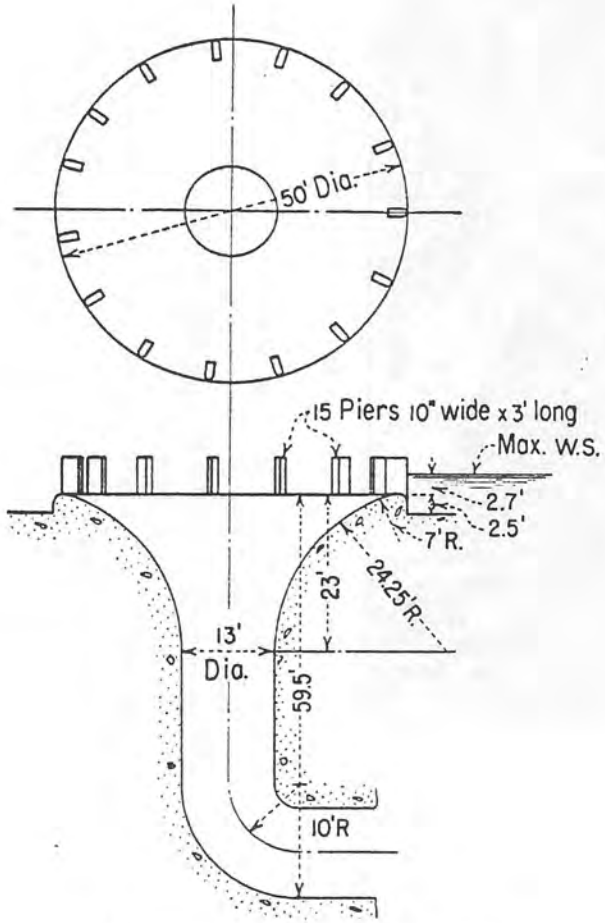

Fig. 7.—Pontian Ketchil Dam Spillway

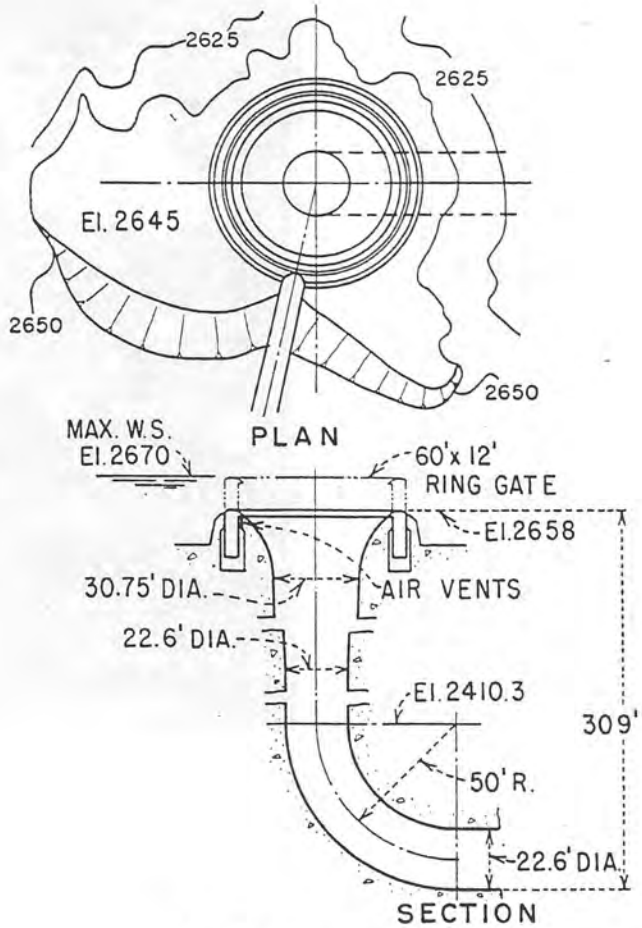

Fig. 8.—Owyhee Dam Spillway

tionable. There was no noticeable vibration, and the radial gates and piers prevented vortex action. The radial gates have been quite satisfactory.

Pontian Ketchil Dam.—The Pontian Ketchil Dam in Singapore was completed in 1931. The spillway was designed for a discharge of 2,700 cu ft per sec, a head of 2.7 ft on the crest, and a fall of 60 ft (Fig. 7). Information indicates that this spillway has operated as expected, without objectionable erosion and without unusual repairs. The spillway is located in the Malayan forest where cyclonic storms of such intensity occur as to uproot large trees and carry them for considerable distances. Many of these trees have passed through the spillway without damage. An emergency spillway was provided in case the morning-glory became partly blocked, but the emergency spillway has not been needed (as of 1955). The antivortex device consists of 15 piers on the crest.

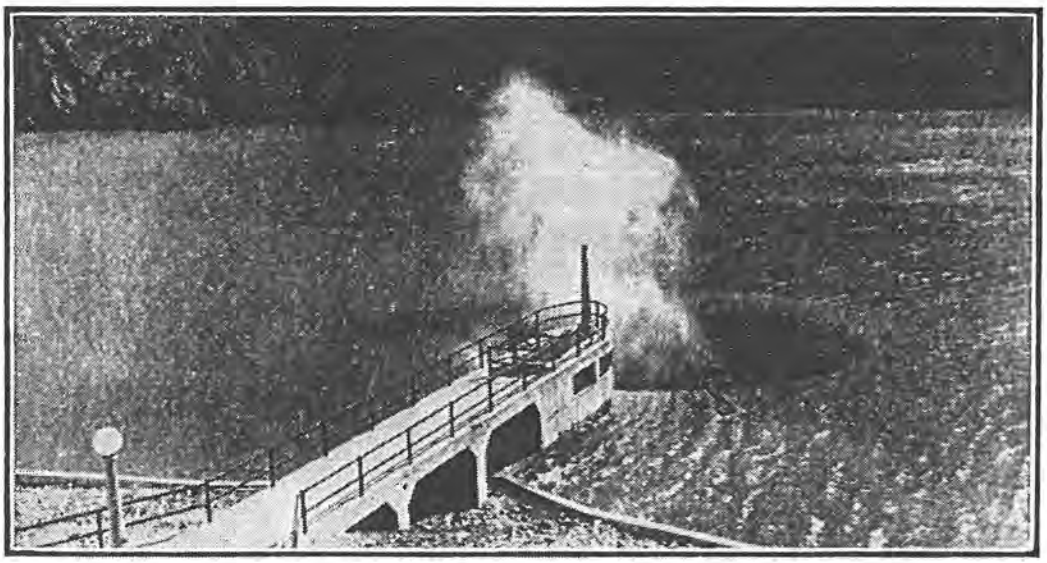

Fig. 9.—Owyhee Dam Spillway Operating with 1.5 Ft of Head on the Crest

Owyhee Dam.—The Owyhee Dam spillway in Idaho (Fig. 8), completed in 1932 by the USBR, was a daring design at the time. The capacity is 30,000 cu ft per sec, the maximum head on the crest for this discharge is 12 ft, and the water is dropped 320 ft through a vertical shaft. A flood occurred in 1936 in which 300,000 acre-ft of water were passed in 3 months. The maximum discharge recorded was 15,000 cu ft per sec, or one-half capacity. Subsequent to this flow, smaller discharges have passed through the spillway frequently. A flow of 6,600 cu ft per sec was recorded in 1951. The greatest flood occurred in 1952, when the spillway operated for more than a month. The maximum discharge through the spillway was 20,000 cu ft per sec, or 67% of capacity. Inspections of the spillway have been conducted frequently since the spillway first operated in 1936; the latest inspection was made after the 1952 flood. The spillway shaft appeared to be in excellent condition. The form board marks still appeared on the concrete surface. The visible part of

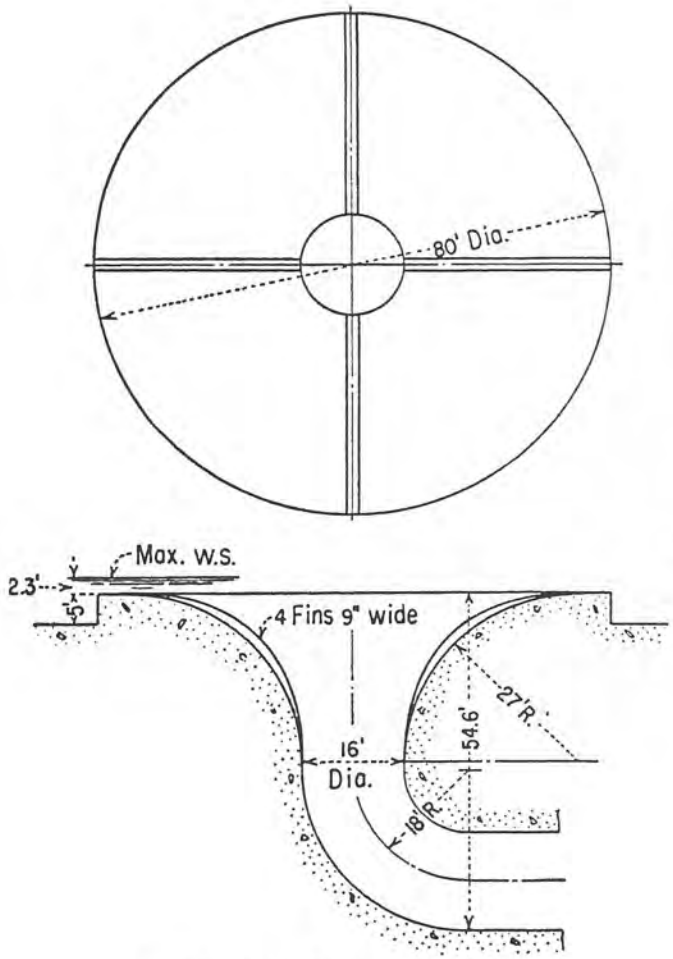

FIG. 10.—SILENT VALLEY DAM SPILLWAY

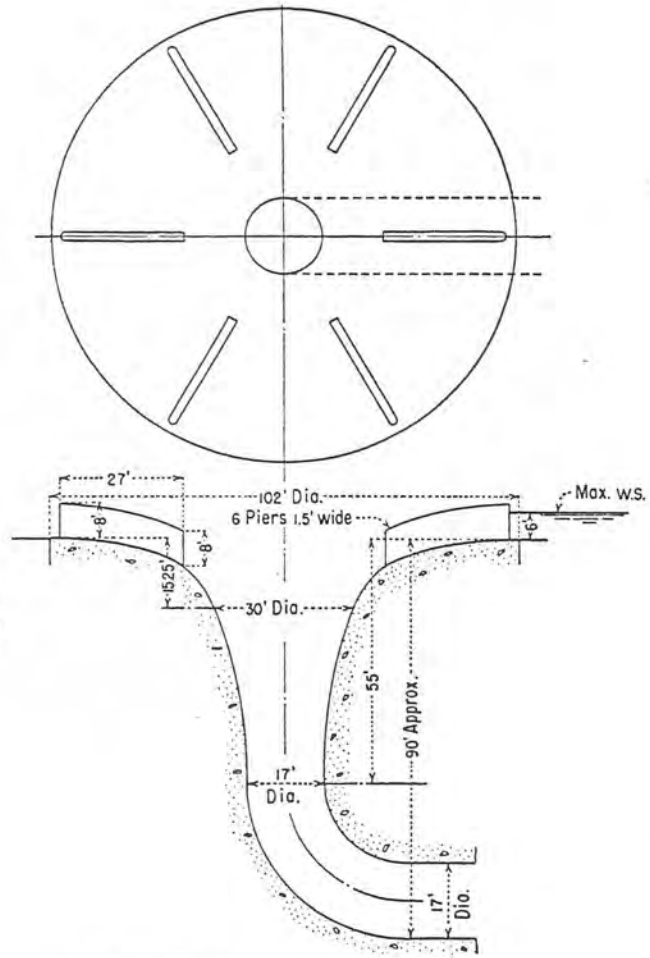

FIG. 11.—MANUHERIKIA FALLS DAM SPILLWAY

the invert of the vertical bend showed only slight surface wear, the maximum probably not exceeding $\frac{1}{4}$ in. in depth.

At the time of the inspection, 7 ft of water was standing in the tunnel so that it was impossible to inspect the lower part of the elbow except by probing. Probing with a piece of $\frac{1}{2}$-in. pipe indicated no cavities or sign of excessive wear at the base of the vertical bend. As nearly as could be determined, the surface of the concrete in this area was not smooth, but the roughness probably did not exceed $\frac{1}{2}$ in. in depth. The invert of the horizontal tunnel was also inspected by probing. No signs of excessive wear were found in this area, and the surface of the concrete appeared to be of about the same roughness as that observed near the base of the elbow. No evidence of vibration has been apparent during spillway operation, and the jet does not flutter even with the gate in a raised position. It is also of interest to note that a single pier controls the vortex action and also houses the ring-gate operating equipment.

As this spillway is unusual so far as size is concerned, a few of the operating characteristics will be cited. For heads of from 1 ft to 2 ft over the gate, the water falls in a solid sheet toward the center of the shaft, apparently entraining air faster than it can be released at the outlet end of the tunnel. This entrainment causes the pressure to increase until it is sufficient to "break back"; then air emerges with sufficient force to carry spray 50 ft or 60 ft above the level of the gate, as shown in Fig. 9. This phenomenon occurs sometimes as often as once every 5 min, depending on the tailwater elevation. For heads less than 1 ft on the crest, entrained air can apparently move back up the spillway shaft unhampered. For heads greater than 2 ft, the air pressure is not sufficient to break back and the air is forced through the outlet end of the tunnel, causing spray to be thrown high into the canyon. This action is directly related to the tailwater as a rather large tailwater depth causes a jump to form in the tunnel for most discharges.

The ring gate on the spillway and the controls have operated smoothly at all times. The ring gate was designed for automatic operation but it was learned that manual operation was preferable. A similar type of gate was incorporated on the spillway of the Hungry Horse Dam.

The Silent Valley Dam.—The spillway for the Silent Valley Dam in Ireland (Fig. 10) was designed for a capacity of 2,500 cu ft per sec, a head of 2.3 ft on the crest, and a fall of 55 ft. Apprehension that erosion might occur caused the designers to line the vertical bend with cast iron. The spillway has operated several times, as expected, without any unusual erosion or repairs.

Manuherikia Falls Dam.—The Manuherikia Falls Dam spillway in New Zealand (Fig. 11) is designed for 15,000 cu ft per sec, a fall of approximately 96 ft, and a head of 6 ft on the crest. This spillway has passed several small floods since its completion in 1935, aggregating about 2 ft of head on the crest, in addition to a moderately large flood in November, 1948. In 1948 the spillway passed a maximum flow of 5,000 cu ft per sec, representing one third of capacity. Erosion has occurred on the crest curve of the morning-glory at the construction joints. There are also signs of wear at the circumferential construction joints in the vertical shaft to approximately 25 ft below

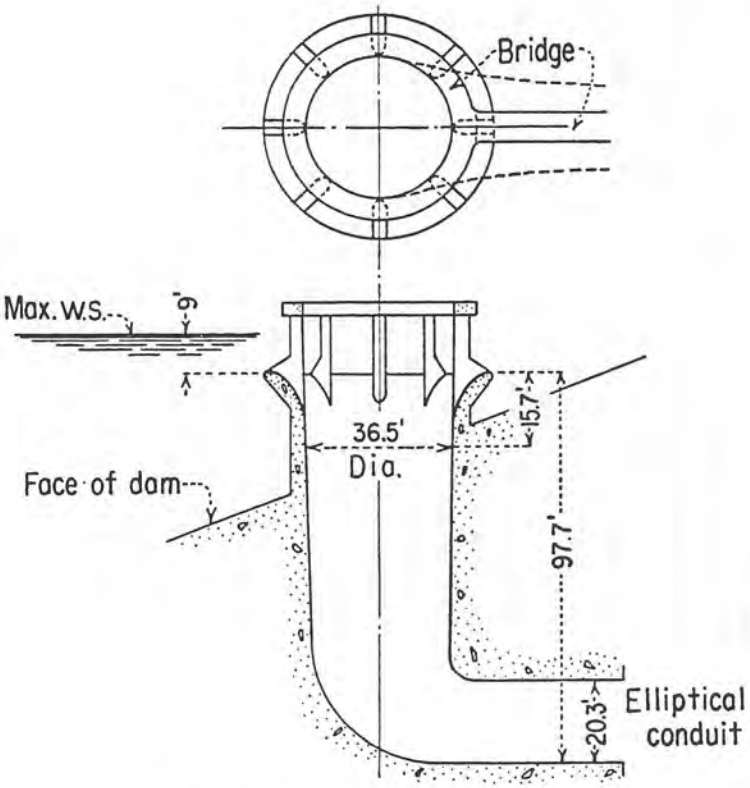

FIG. 12.—LA REGADERA DAM SPILLWAY

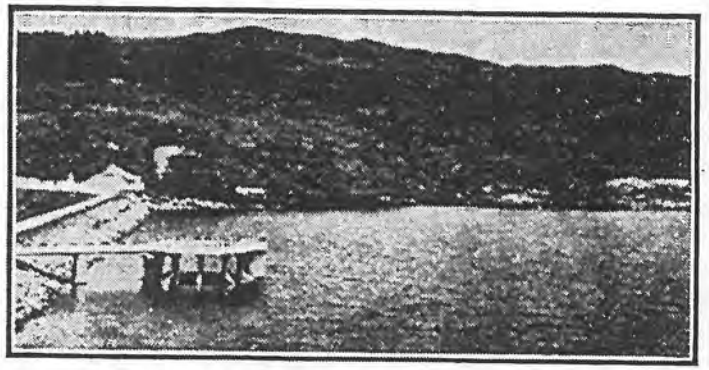

FIG. 13.—ENTRANCE, LA REGADERA DAM SPILLWAY

FIG. 14.—BEND AT BASE, LA REGADERA DAM SPILLWAY

crest level. At these joints some of the concrete has been eroded to a depth of 3 in. whereas a few patches on the surface show wear to a depth of approximately $\frac{3}{4}$ in. on areas up to 3 sq ft. Frost action may have caused some of the erosion, there being seepage through the rock surrounding the spillway. Wear is also apparent at construction joints (as much as 3 in.) at the vertical bend and in the horizontal tunnel for some 100 ft downstream. There has also been a general wearing of the bottom of the horizontal tunnel up to a depth of approximately 1 in., but some of this occurred while the tunnel was being used for stream diversion during dam construction. It is suggested that construction joints be avoided at the crest and also in the vicinity of the vertical bend in the tunnel. Very little debris or ice has passed through the spillway. Six piers serve to counteract vortex action.

Regadera Dam.—Regadera Dam, which forms a reservoir for the city of Bogotá, Colombia, was completed about 1935. The morning-glory spillway of this dam (Figs. 12 and 13) was designed for a maximum discharge of 15,000 cu ft per sec, with a head of 9 ft on the crest, and a total fall of 107 ft. This spillway has operated approximately 9 months out of every year since 1938. During this time approximately 800,000 acre-ft of water have passed through the spillway. The maximum discharge occurred in 1943 and was estimated to be approximately 5,670 cu ft per sec, or 38% of capacity. From November, 1938, to November, 1952, there were 78 days of operation in which the head over the crest exceeded 1.3 ft, and of the 78 days, the spillway operated 4 days with heads greater than 3.3 ft. There has been a general roughening of the surface at the base of the vertical bend, as can be seen in Fig. 14. The vertical shaft is in excellent condition, but the invert of the horizontal tunnel shows erosion to a depth of approximately 1 in. However, water from the outlet works flows through the horizontal part of the tunnel approximately 75% of the time. This could carry some abrasive material. In general, debris has passed through the spillway without difficulty. In 1943, however, some logs and debris lodged across the piers of the spillway, and it was necessary to lift this material out with cables. During one night of this flood, a great deal of vibration was noticeable and the noise was louder than usual. This could have been caused by debris blocking part of the spillway; no vibration has been reported before or since this incident.

Burnhope Dam.—The spillway at Burnhope Dam in Durham County, England (Fig. 15), has a capacity of 2,600 cu ft per sec, with 2.7 ft of head on the crest and a fall of 106 ft. The vertical bend in the Burnhope spillway was lined with cast iron to prevent erosion. One moderate flood of 1,440 cu ft per sec, or 55% of capacity, has been recorded with no undersirable operating conditions or damage. In this design, a curtain wall extends across the center of the spillway parallel to the horizontal tunnel.

Kingsley Dam.—The spillway for the Kingsley Dam on the North Platte River near Ogallala, Nebr., is shown in Fig. 16. The spillway is designed for a capacity of 54,000 cu ft per sec, with a head of 28 ft on the crest and a fall of 148 ft. This spillway has been in operation many times since 1947. During 1951, the gates were used to pass water for irrigation and power for almost the entire year. The maximum discharge has been approximately 4,500 cu ft per

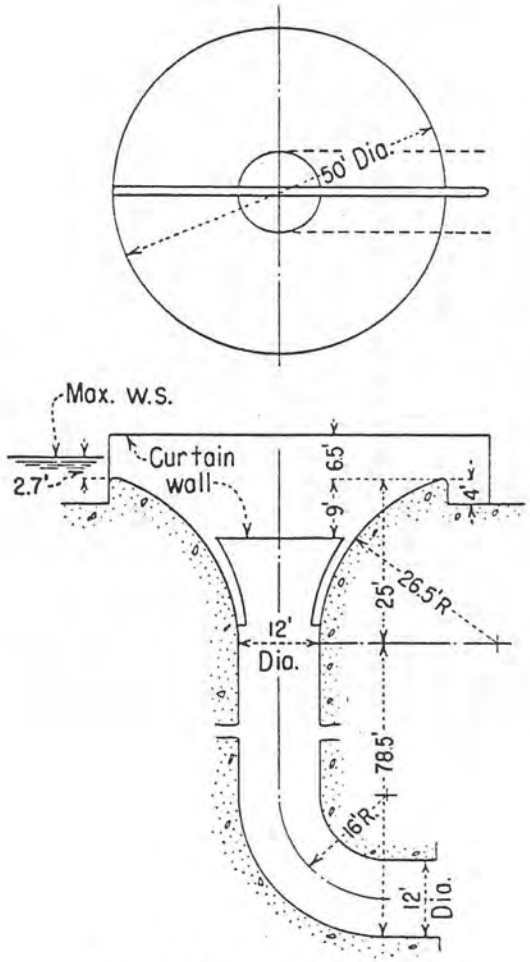

FIG. 15.—BURNHOPE DAM SPILLWAY

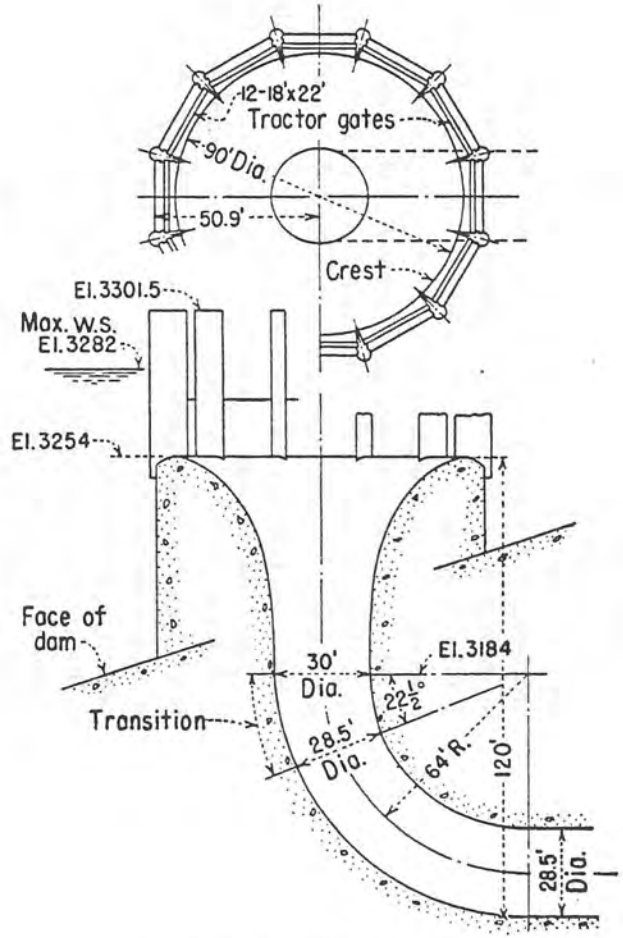

FIG. 16.—KINGSLEY DAM SPILLWAY

sec, 8% of capacity. The vertical bend and tunnel show no perceptible wear, and there has been no opportunity to pass debris or ice through the spillway as the flow has always passed under the tractor gates. No difficulties have been encountered in connection with the operation of these high tractor gates.

Jubilee Dam.—The spillway at the Jubilee Dam, in Hong Kong (Fig. 17), has a capacity of 17,000 cu ft per sec, with a head of 9.4 ft on the crest and a drop of 245 ft. There was evidently some concern as to the advisability of dropping the water 245 ft into a vertical shaft, which is evidenced by the introduction of the inclined tunnel. The only information received on the Jubilee spillway is that the spillway operated as expected. Discharges have been small or moderate, and no erosion is reported. This is the first spillway in which special air venting was used in the shaft. A curtain of water tends to seal the tunnel at the entrance to the inclined shaft; thus, an air duct was provided in the inclined part of the tunnel. It is interesting to note that the curtain wall in this spillway is normal to the one on the Burnhope spillway.

Lady Bower Dam.—The Lady Bower Dam in Derby County, England, completed in 1944, utilizes two similar morning-glory spillways (Fig. 18). Each spillway is designed for a capacity of approximately 10,000 cu ft per sec, with a head of 6.5 ft on the crest and a fall of 128 ft. Several floods have passed over the spillways—in fact, three heavy storms occurred before the spillways were completed. The discharges through the spillways have been 1,240 cu ft per sec in 1947, 540 cu ft per sec in 1948, 310 cu ft per sec in 1949, 1,520 cu ft per sec in 1950, 1,460 cu ft per sec in 1951, and 2,310 cu ft per sec in 1952; it is assumed that these discharges should be divided between the two spillways. The tunnel and vertical bends on both spillways were inspected in 1951 and on several previous occasions. The only sign of erosion was at the inside of the vertical bend at about the midpoint. This involves an area of about a yard square and is little more than roughening of the concrete surface. The spillway has passed small quantities of ice, but the radial piers on the rim of the spillway prevent the passage of any large quantity particularly when the ice is thick. Only during the last stages of thaw does any ice go down the spillway. It has been noted that when the spillway is discharging heavily the cascade of broken water falling down the shaft acts as an air pump and produces an air current charged with spray, which discharges out the lower end of the tunnel in considerable volume. Contrary to expectations, the discharge is slightly greater for a given head with the stepped morning-glory than with a smooth one. The spillways have proved a highly efficient method of discharging overflow water from the reservoir and they are entirely reliable for that purpose.

Lumot Dam.—The spillway at the Lumot Dam in the Philippine Islands was completed in 1949; unfortunately, the drawings for this spillway are not available. The spillway is designed for a capacity of 7,060 cu ft per sec. The spillway operated intermittently from November 28, 1951, to March 1, 1952. The maximum discharge was 690 cu ft per sec, or approximately 10% of capacity. There has been no noticeable erosion throughout the tunnel lining. No debris has passed through the spillway, noise has been unnoticeable, and no vibration has been observed.

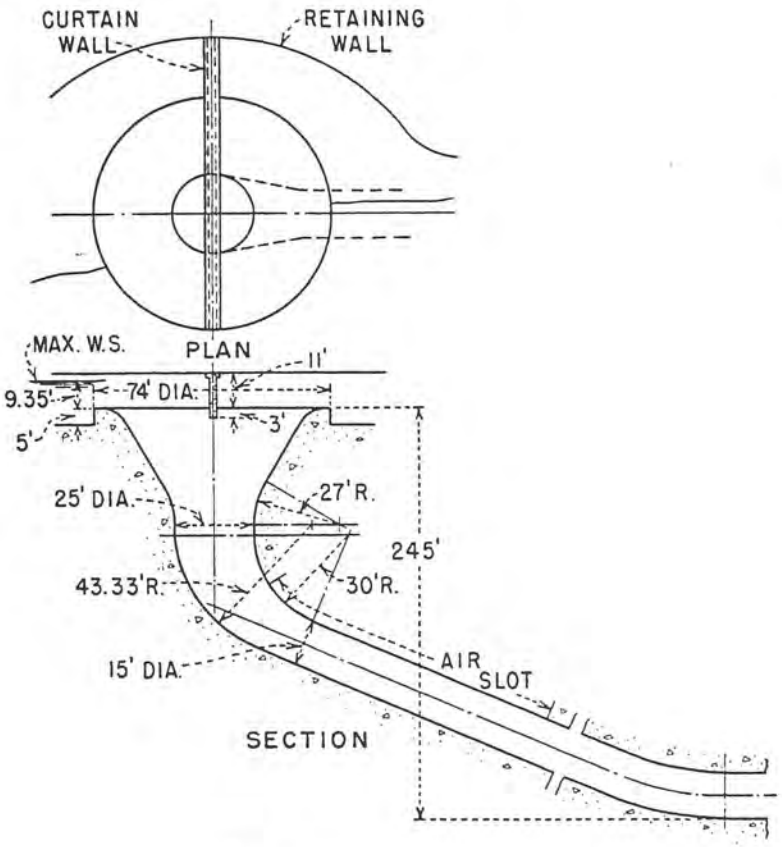

FIG. 17.—JUBILEE DAM SPILLWAY

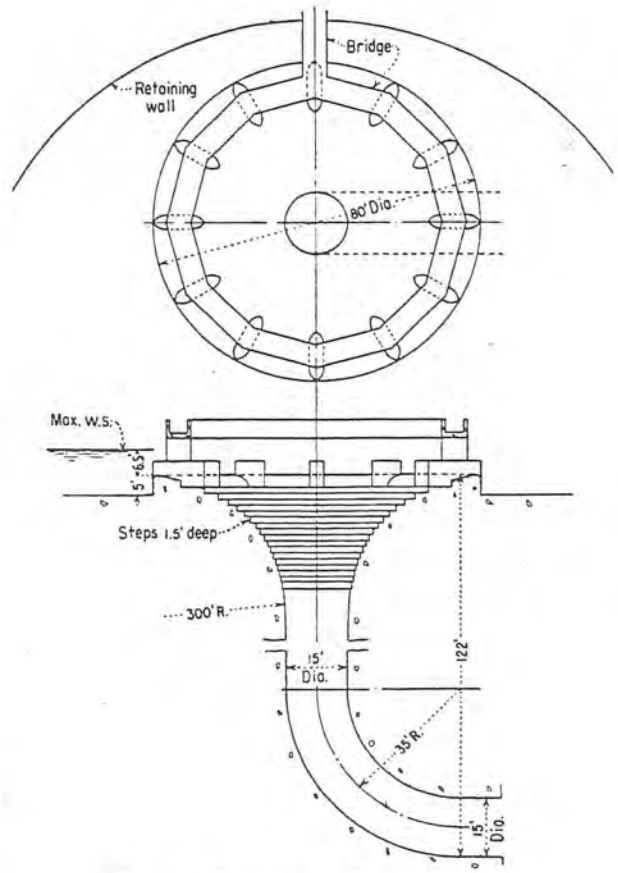

FIG. 18.—LADY BOWER DAM SPILLWAY

Heart Butte Dam.—The Heart Butte Dam (Fig. 2) was constructed by the USBR and completed in 1949. The spillway is different from those previously cited in that it is designed to operate principally submerged. The capacity is 5,600 cu ft per sec for a head of 54 ft on the crest, and the water falls 113 ft to the invert of the horizontal tunnel. Free flow occurs for heads up to 6 ft, and submerged flow occurs for greater heads. Vortices form for heads of from 6 ft to 20 ft; for heads of from 20 ft to 54 ft, vortices are either small or nonexistent. The fixed piers on the crest serve to break the large vortex into a number of smaller ones, thus reducing fluctuations in discharge and resulting in improved flow conditions.

The spillway passed a major flood in 1950, less than a year after the dam was completed. It operated for approximately 1 month and passed 148,000 acre-ft of water. The maximum flow into the reservoir during the flood was 24,000 cu ft per sec, and the maximum discharge through the spillway was 3,800 cu ft per sec. An inspection after the flood showed erosion at two points in the vertical bend. In each case the eroded areas were about 8 in. in diameter and a maximum of 1 in. deep; casts have been made.[3] A second flood was experienced at the Heart Butte Reservoir in 1951. The spillway again operated for almost a month at a maximum discharge of approximately 3,000 cu ft per sec. Casts of the erosion in the vertical bend were again made after the second flood, and it was found that there was practically no difference in those taken in 1950 and 1951.

The spillway is not noisy and there is no noticeable vibration, but it has passed a large quantity of ice and debris. In 1950 the ice on the reservoir was 12 in. thick, and in 1951 it was 36 in. thick. As the flood occurred during a thaw much of this ice passed through the spillway, together with large timbers and debris.

Shade Hill Dam.—The Shade Hill Dam in South Dakota (Fig. 19), another USBR project, was completed in 1950. This is another retention reservoir, and the spillway is designed to operate submerged. The spillway is designed to pass more than 5,000 cu ft per sec, with a head of 40 ft on the crest. If the head increases above 25 ft, an emergency spillway will also go into operation. A flood filled the reservoir in the spring of 1951 and the spillway operated for 1½ months. The maximum flow through the spillway was 5,020 cu ft per sec for a head of 26 ft over the spillway crest whereas the maximum discharge flowing into the reservoir was 33,250 cu ft per sec. After the flood, plaster casts were made of the invert of the vertical bend but these showed no noticeable erosion. The tunnel and the vertical shaft were also in excellent condition.

During the flood a boom which was contrived of oil barrels and cables partly went through the spillway along with drift wood, timber, and ice, which was from 4 in. to 6 in. thick on the reservoir. A large dislodged tree some 18 in. to 20 in. in diameter, with roots and branches, was also observed going over the spillway. While operating submerged, a large vortex persisted over the spillway but there appeared to be no detrimental effect caused by it.

[3] "Morning-Glory Shaft Spillways: Performance Tests on Prototype and Model," by Alvin J. Peterka. *Transactions*, ASCE, Vol. 121, 1956, p. 385.

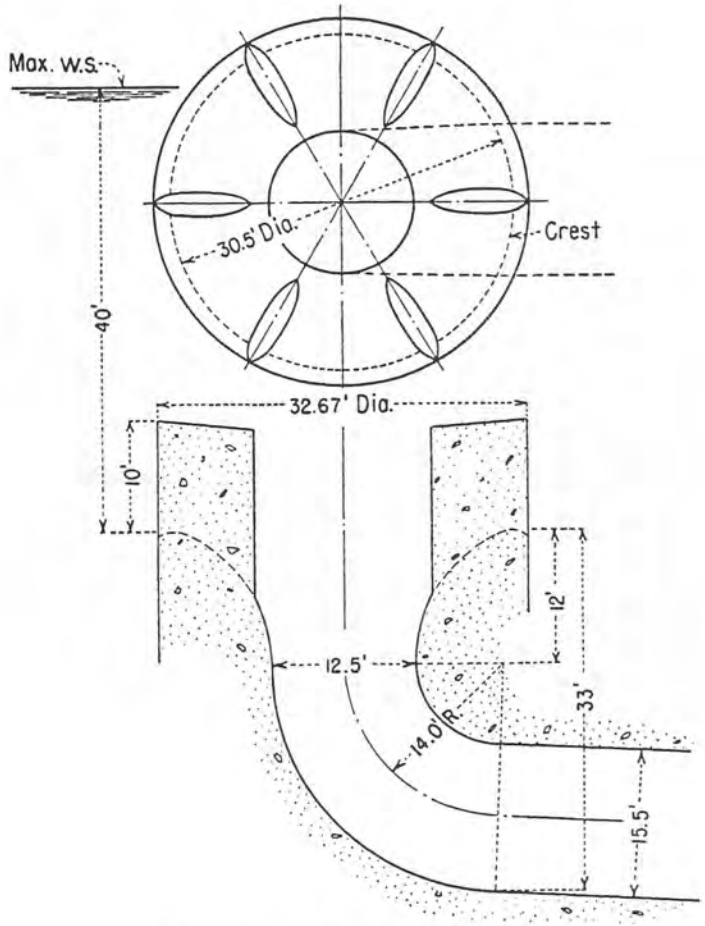

Fig. 19.—Shade Hill Dam Spillway

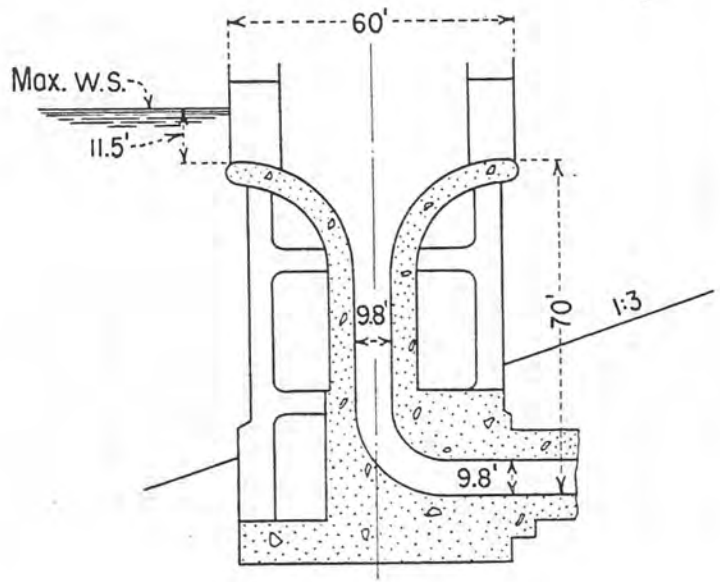

Fig. 20.—Akongtien Dam Spillway

Akongtien Dam.—The Akongtien Dam in South Taiwan was completed in 1951. The spillway was designed for a maximum discharge of 3,250 cu ft per sec, with a head of 11.5 ft on the crest. The drop from headwater to invert of the horizontal tunnel is approximately 81 ft. The spillway discharged for approximately 5 days in 1953, with a maximum discharge of 1,000 cu ft per sec, or approximately one third of capacity. The volume of water passed was approximately 27,300 acre-ft. No erosion could be found in the shaft, vertical bend, or horizontal tunnel. This spillway operates submerged at about half capacity. Vibration was unnoticeable and noise was not objectionable. Very little debris passed over the spillway during the flood.

Conclusions

From the foregoing prototype information it can be noted that about half of the spillways that have operated have undergone a fair test. The results of the investigation are by no means conclusive but they are extremely encouraging. In summing up the foregoing, it can be said that in no case has erosion of a serious nature occurred in any of the spillways investigated. Of particular importance is the report from the Owyhee Dam which operated often, once at half capacity and once at two-thirds capacity. This is definitely the most adverse operating condition experienced with a morning-glory spillway dropping the water over 300 ft vertically, yet nothing but roughened surfaces has developed. There is good reason to believe that the erosion reported at the vertical bends on several of the spillways can be attributed to logs and objects falling down the shaft; to poor surface concrete which has been scaled off by the high-velocity water; or to spalling as a result of freezing and thawing. Vibration, noise, and vortex action have been found unobjectionable; it is possible, however, that unsymmetrical loading of the spillway with debris can produce vibration, as was surmised in the case of the Regadera spillway.

Several recommendations have been suggested in the correspondents' letters: Construction joints should be eliminated in the morning-glory part of spillways, as objectionable erosion was experienced in the case of the Manuherikia Falls Dam spillway. Several correspondents suggested that construction joints be eliminated in the vicinity of the vertical bend and that particular care be taken with formwork to eliminate offsets in this curved surface. Some went so far as to recommend grinding of the invert surface throughout the vertical bend.

Approximately one third of the spillways investigated showed considerable leakage at construction joints in the shaft and in the horizontal tunnel. This leakage is objectionable from the standpoint of frost action, inspection, and repairs. Also, large cavities can be formed around the tunnel lining where water has transported material through the construction joints. It was therefore suggested that rubber waterstops be considered in future designs.

The best method known for coping with erosion caused by high velocities in morning-glory spillways lies in maintaining smooth surfaces, outlawing misalinement, and eliminating construction joints in vertical bends. It stands to reason that a roughened surface is more susceptible to scaling, impact forces, and cavitation than a smooth one when exposed to high-velocity water.

On the basis of the foregoing, the designer should be able to view morning-glory spillway design with more confidence than has existed in the past.

Acknowledgments

The following persons contributed the information on prototype operation: F. Kurtz, M. ASCE; H. M. Nelson, A.M. ASCE; G. E. Johnson, M. ASCE; A. C. Tilley; J. W. Ridley; and A. G. Park, M. ASCE (Wellington, New Zealand); H. Prescott Hill (Manchester, England); F. W. Rozo (Bogotá, Colombia); F. C. Rodriquez, A. M. ASCE (Manila, Philippine Islands); Y. C. Chu (South Taiwan); S. B. Morris, M. ASCE (Los Angeles, Calif.); Conrad P. Hardy, M. ASCE (Cincinnati, Ohio); C. E. Blae, M. ASCE (Knoxville, Tenn.); the associates of Mr. Binnie (Westminster, S. W. England); and the regional directors of the USBR at Billings, Mont., Denver, Colo., and Boise, Idaho. The assistance of D. C. Walter at Boise is greatly appreciated.

DISCUSSION

BERNARD DONELAN.[4]—The morning-glory spillway has been used at Kingsley Dam to discharge water a few months of every year since 1947. The spillway has never been operated as a flood-control structure as the reservoir has never reached the stage where it was necessary to discharge excessive water.

The statement by Mr. Bradley that no debris or ice has passed through the spillway because the flow has always passed under the tractor gates is correct. Also, no water has been discharged through the morning-glory spillway during extremely cold weather because the film of water between the tractor gates and the guides freezes the tractor gates to the guides and they cannot be moved. Therefore, the morning-glory spillway is not operated during the winter when an ice cap has formed on the reservoir.

The water in the morning-glory spillway discharge conduit is approximately 20 ft when the spillway is not in operation. A diver made a complete inspection of the part of the conduit under water in September, 1949, and found the surface of the concrete conduit to be in perfect condition with no signs of erosion or cavitation. The surface of the concrete above the water showed no wear.

The morning-glory spillway at the Kingsley Dam has only operated at a very small percentage of capacity; the tractor gates are all working perfectly. The spillway is operating with very little noise and no noticeable vibration.

DONALD S. WALTER.[5]—The material presented herein is a description of the Hungry Horse Project, with special emphasis on the initial operation of the spillway.

As mentioned by Mr. Bradley, the Hungry Horse spillway is a bold design of the morning-glory type. Hydraulic model studies of the spillway were made on a 1 to 36 scale model for the purpose of developing the hydraulic design. The morning-glory spillway with an adjustable ring-gate crest structure which discharges into a tapered and sloping tunnel presented unusual and difficult hydraulic problems. From a hydraulic standpoint, it was recommended that an open-channel entrance structure similar to the Hoover Dam spillways be utilized at the intake of the tunnel. However, structural limitations made the use of the morning-glory entrance more desirable.

The Hungry Horse reservoir was filled to capacity the first year following completion of the dam, when water began flowing over the spillway crest on July 9, 1954. Initial operating tests were performed on July 13, 1954, with releases through the spillway up to a maximum of 30,000 cu ft per sec. Although the spillway was designed to pass a flow of 53,000 cu ft per sec, combined releases from the reservoir had to be controlled so as not to cause the river to exceed the flood stage of 50,000 cu ft per sec at Columbia Falls, Mont.

[4] Resident Engr., Supt., Central Nebraska Public Power and Irrig. Dist., Hastings, Nebr.

[5] Regional Engr., Bureau of Reclamation, U. S. Dept. of the Interior, Boise, Idaho.

Hydrology.—Because the south fork of the Flathead River drains a high mountainous area of 1,640 sq miles bounded on the east by the Continental Divide and receives most of its precipitation through winter snowfall, the bulk of its floodwaters is discharged during April, May, and June, with the high-water peak usually arriving in May. There is a wide variation between the maximum and minimum yield, varying from 3,500,000 acre-ft to 1,400,000 acre-ft, with the average being 2,350,000 acre-ft per yr. In general, use of the spillway is required only when the reservoir is full in the spring and it is deemed advisable to draw down the reservoir level to reserve space for flood control.

Dam.—Hungry Horse Dam is a variable-thickness, concrete-arch dam 2,115 ft long at the crest with a maximum height of 564 ft. Containing 2,935,000 cu yd of concrete, it ranks fourth in the United States in volume, exceeded only by Grand Coulee (Washington), Shasta (California), and Hoover (Nevada) dams. The reservoir has a capacity of 3,468,000 acre-ft of which 2,982,000 acre-ft are active storage for power generation.

Outlet Works.—Three 96-in.-diameter outlet pipes are provided to regulate downstream water requirements and to permit rapid lowering of the reservoir for flood control. Discharge through the outlet pipes is controlled by hollow-jet valves in the valve house and ring-follower gates located in the foundation of the power plant. The maximum capacity of the outlet works is 14,400 cu ft per sec with full reservoir.

Power Plant.—The powerhouse is located at the toe of the dam in the original river channel and contains four main generating units. Each unit consists of a 75,000-kva generator driven by a 105,000-hp turbine. With full reservoir, each turbine requires a flow of slightly more than 2,000 cu ft per sec.

Spillway.—The outstanding hydraulic appurtenance of Hungry Horse Dam is the morning-glory spillway shown in Fig. 1. Located on the right abutment, the spillway consists of a concrete-lined tunnel with a 64-ft by 12-ft steel ring gate installed in the top of the morning-glory structure. The gate is a buoyant vessel that floats with 9 ft of freeboard in the water of the concrete gate chamber. The crest of the gate can be raised or lowered a distance of 12 ft by the operation of valves which balance the inflow and outflow of water in the gate chamber. An automatic control system maintains the water at any preset elevation, and manual control is provided for emergency operation. Air is supplied to the undernappe of the flow through the morning-glory by nine 8-in. pipes which terminate in a triangular-shaped air chamber encircling the structure. A 6-ft-square air-inlet tunnel opening to the atmosphere provides air for the air chamber and also to an opening in the crown of the tunnel just below the throat.

The throat or base of the converging section of the morning-glory is 37 ft in diameter, tapering to a diameter of 34.79 ft at the upstream end of the inclined tunnel. The incline has a total vertical drop of 341.3 ft and tapers to a diameter of 24.5 ft at the downstream end. A vertical bend connects the inclined tunnel to the nearly horizontal tunnel which continues to the outlet portal on a slope of 0.0019. The tunnel is 24.5 ft in diameter through-

out the lower bend and for a distance of 219.25 ft downstream, then is transformed through a 166-ft-long transition section to a 31-ft-diameter horseshoe tunnel. The downstream end of the spillway floor is raised 13.5 ft by a long radius curve and forms a vertical deflector which raises the high-velocity jet above the river tailwater and allows the jet to drop into the river a safe distance from the structure. Thus, from the spillway crest to the invert of the tunnel at the outlet portal, the spillway discharge drops a vertical distance of 487 ft in a horizontal distance of 1,402.09 ft.

Precautions Taken During Construction.—In order to avoid, so far as possible, a recurrence of the erosion experienced in the Arizona spillway tunnel at Hoover Dam, several precautionary measures were taken during construction of the Hungry Horse spillway to assure accurate alinement, smooth concrete surfaces, and elimination of construction joints in the vertical curve and deflector sections. After placement of the tunnel lining, the surrounding rock was thoroughly grouted, using pressures varying between 125 lb per sq in. and 150 lb per sq in.

In the upper part of the inclined tunnel, all abrupt irregularities in the concrete lining were completely eliminated by grinding on a bevel of 1 to 50 ratio of height to length. For the remainder of the tunnel, abrupt irregularities were completely eliminated by grinding on a bevel of 1 to 100 ratio of height to length. A special finish was given to the concrete surface of the vertical curve below the center line of the tunnel. After removal of irregularities by grinding, the surface was thoroughly sandblasted so as to penetrate the small surface voids and completely etch the surface. When all loose materials were removed by washing, mortar was applied by hand-stoning with a fine-grit carborundum stone in sufficient quantity to produce a relatively thin mortar coating which barely covered the high points of the original surface. After the mortar had been water-cured for at least seven days, the surface was carefully smoothed by final grinding.

Special precautionary measures were taken during construction of the vertical bend and deflector sections of the spillway. The concrete in these sections was placed without construction joints and was cooled by pumping river water through tubing embedded in the concrete. The purpose was to repress the temperature rise as much as possible the first week after placement, so that the concrete in these critical sections of lining would not undergo large temperature variations, and therefore could be placed without construction joints and without the development of objectionable cracks.

Spillway Operation Tests.—In order to test the spillway and also to determine the extent of the river-channel improvement work that will be required below Hungry Horse Dam in the future, the spillway was initially placed in operation on July 13, 1954. The tests were conducted under the supervision of Louis Puls, A. M. ASCE, with actual operations being performed under the guidance of Charles Simmonds. Prior to beginning the spillway tests, the reservoir level was at El. 3560.5, resulting in 6 in. of water flowing over the crest of the 64-ft-diameter ring gate which was in the maximum raised position.

During the tests, observations were made at the spillway inlet or morning-glory and at the tailrace for the conditions shown in Table 2.

For each gate setting, the observations were made on (1) the elevation of the gate crest, (2) the elevation of the reservoir level, (3) the air intake velocity, (4) the elevation of the tailrace above the power-plant weir, (5) the elevation of the tailrace downstream from the power-plant weir, and (6) pressure readings in the morning-glory and the throat of the spillway tunnel.

TABLE 2.—FLOWS[a] AT HUNGRY HORSE DAM

Test	Reservoir release	Outlet works	Power plant	Total
1	2,000		8,100	10,100
2	5,000		8,100	13,100
3	10,000		8,100	18,100
4	10,000	3,000	8,100	21,100
5	10,000	6,000	8,100	24,100
6	15,000		8,100	23,100
7	20,000		8,100	28,100
8	30,000			30,000

[a] In cubic feet per second.

These readings and other pertinent data are being studied (1955) for comparison of the prototype behavior with the model. It is unfortunate that this information cannot be made available until after the study has been completed.

As the gate was slowly lowered, some spray emerged from the morning-glory opening when the head over the crest reached approximately 1 ft. However, as the head increased, the spray decreased in intensity, as in the case of

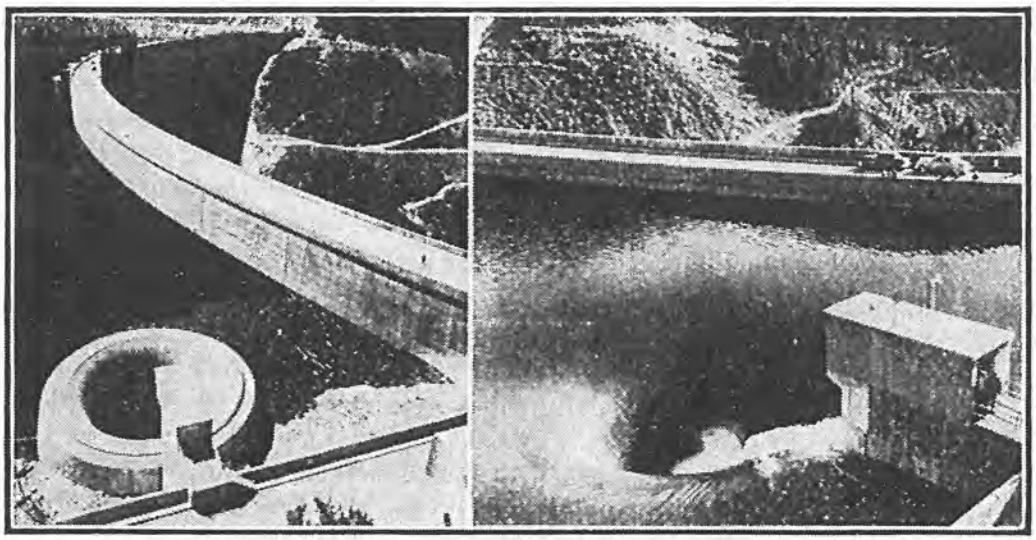

FIG. 21.—COMPLETED HUNGRY HORSE DAM SPILLWAY STRUCTURE

FIG. 22.—FLOW OF 30,000 CU FT PER SEC INTO SPILLWAY

the Owyhee Dam morning-glory spillway. It was noted that the minimum flow required in the tunnel to cause the flow to spring free of the deflector was between 1,000 cu ft per sec and 1,500 cu ft per sec.

In Fig. 21 there is shown the morning-glory structure prior to the time the reservoir was filled. Figs. 22, 23, and 24 show the flow characteristics of the

spillway when the discharge reached 30,000 cu ft per sec. It is interesting to note that, during this high flow to the spillway, the velocity of air into the air-inlet tunnel was approximately 4,000 ft per min.

In order to observe tailrace conditions with both the spillway and outlet works in operation, two hollow-jet valves were opened to discharge approximately 3,000 cu ft per sec each, in combination with a release of 10,000 cu ft per sec from the spillway. Under these conditions, the water in the river was drawn down 20 ft below the level of the power-plant tailrace. This

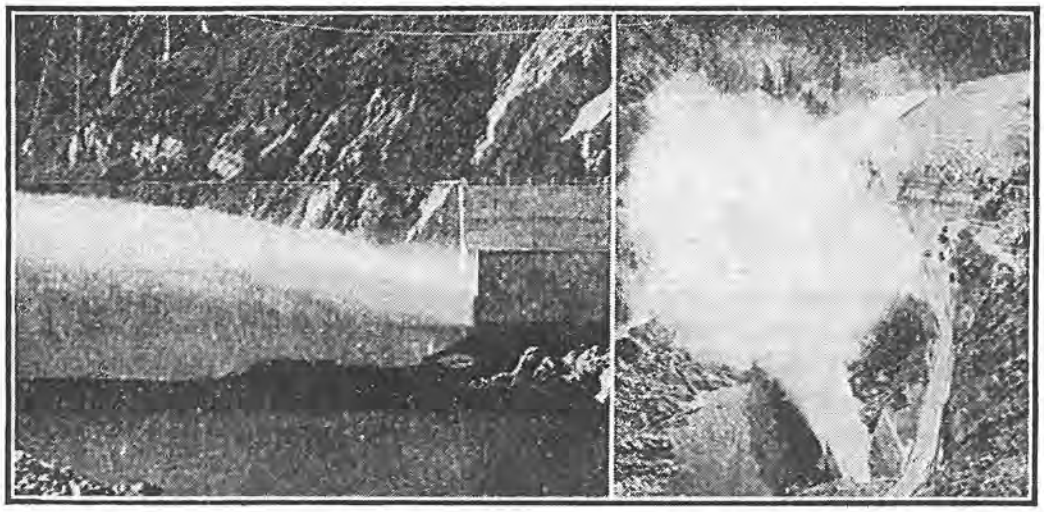

FIG. 23.—SPILLWAY JET AT DEFLECTOR FIG. 24.—OVERHEAD VIEW OF DISCHARGE

same condition existed during the model tests and resulted in the construction of a concrete weir across the river channel to assure adequate head on the draft tubes of the power plant during operation of the spillway and outlet works.

Some erosion occurred in the river channel during the tests, forming a gravel bar 1,400 ft downstream from the powerhouse. This bar will be removed when channel improvement work is performed and no further erosion is anticipated.

FRED W. BLAISDELL,[6] M. ASCE.—The prototype performance of one form of the closed-conduit type of spillway has been presented by Mr. Bradley. The hydraulics of this type of spillway have been examined by the writer.[7]

The writer has been concerned with closed-conduit spillways since 1940. This work has involved both laboratory tests and the inspection of field structures ranging in size from 8-in.-diameter pipes to spillways having twin barrels 6 ft square. These structures are small in comparison to morning-glory, closed-conduit spillways considered by Mr. Bradley, but because the Soil Conservation Service, United States Department of Agriculture (SCS), probably builds well over a thousand closed-conduit spillways each year, the statistical

[6] Project Supervisor, Agri. Research Service, U.S. Dept. of Agriculture, St. Anthony Falls Hydr. Lab., Minneapolis, Minn.

[7] "Hydraulic Fundamentals of Closed Conduit Spillways," by Fred W. Blaisdell; *Proceedings-Separate No. 354*, ASCE, Vol. 79, November, 1953.

opportunity to observe the characteristics of these spillways is better than for the fewer large-size, morning-glory spillways.

The ability of the closed-conduit spillway to "knock the peak off" the flood hydrograph is an important attribute. The peak outflow of 3,800 cu ft per sec reported for the Heart Butte spillway is only 16% of the peak inflow. This large reduction in the peak flow is not uncommon for the closed-conduit spillway. The reduction of the peak outflow to only 3% of the peak inflow at the Shade Hill spillway reflects the effects of an excellent site.

It should be realized that the planned operation of closed-conduit spillways in the submerged range calls for engineering of the highest order because of the limited capacity inherent in this type of spillway. Not only the peak inflow to the reservoir is required; the complete inflow hydrograph is required so that the flood can be routed through the reservoir and sufficient volume of storage can be provided to care for the detained run-off; M. M. Culp, A.M. ASCE, has cited some of the factors involved.[8]

An emergency spillway, such as is used on the Pontian Ketchil and Shade Hill dams, is certainly a wise precaution. This precaution is more important when the spillway operates submerged than for unsubmerged operation when the discharge changes more rapidly with the head. For the small spillways built under the direction of the SCS, the emergency spillway is frequently lined with vegetation in the expectation that this type of spillway will be adequate for the infrequent peak flows—of short duration on these relatively small watersheds—which exceed the designed capacity of the closed-conduit spillway.

In contrast to the almost complete lack of trash difficulties reported by Mr. Bradley, trash is likely to clog the relatively small soil and water conservation spillways. Therefore, the emergency spillway is necessary to protect against overtopping of the dam from clogging. The writer has observed many types of trash racks under field conditions and has arrived at several opinions regarding these unattended racks: (1) All possible material should be permitted to pass through the spillway in order to delay clogging of the trash rack as long as possible. Therefore, the openings in the trash rack should be as large as feasible. (2) Trash racks should not be located on or close to the closed-conduit-spillway crest. The velocities at the crest are high, the trash packs tightly, and the rack soon becomes a dam rather than a strainer. (3) Timely maintenance is essential—something that often seems to be neglected. (4) The best trash rack for small closed-conduit spillways is (*a*) constructed of woven wire fencing, (*b*) located well away from the inlet so that packing of the trash is minimized, and (*c*) relatively long so that low velocities can be achieved.

Some device to inhibit vortex action should be used on all closed-conduit spillways. The writer has observed reductions in spillway capacity up to 44% as a result of vortex action, and A. M. Binnie and G. A. Hookings have reported[9] reductions up to 90% for plain-pipe entrances and up to 74% on models of bellmouth spillways. Of the vortex inhibiters tested by the writer,

[8] "The Effect of Spillway Storage on the Design of Upstream Reservoirs," by M. M. Culp, *Agricultural Engineering*, Vol. 29, No. 8, 1948, pp. 344–346.

[9] "Laboratory Experiments on Whirlpools," by A. M. Binnie and G. A. Hookings, *Proceedings*, Royal Soc. of London, Series A, Vol. 194, 1948, pp. 398–415.

a dividing wall, such as is used on the Burnhope and Jubilee dams, has satisfactorily controlled vortex formation. The cross walls should be oriented with the approaching flow; it is not necessary that they be parallel to the axis of the discharge tunnel. An excellent picture of a vortex on a field structure was published by L. Standish Hall in 1942.[10] Uncovered piers, which are common on the spillways reported on by Mr. Bradley, have not been tested by the writer. However, a cover supported on three piers having a height about equal to the depth of initiation of submerged flow performed satisfactorily.

Tentatively, it is suggested that antivortex piers or walls be two shaft diameters high. This is somewhat higher than the 1.3 diameter height of the Heart Butte piers and the 0.8 diameter height of the Shade Hill piers. However, the vortex reported over the Shade Hill spillway is evidence that the piers may be a little low. Another uninvestigated factor that may govern the pier height is the shape of the entrance—the converging morning-glory entrance may require a smaller pier height than the straight entrances used by the writer in his tests. At a spillway tested at the Stillwater (Okla.) Outdoor Hydraulic Laboratory, small vortices were observed that increased in intensity as the total head decreased, resulting in some decrease in spillway capacity. Practically no vibration was detected in spite of the fact that sucking of air through the vortex was audible some distance away. W. O. Ree has stated (in an unpublished report made in 1954):

> "Vibration was noticed only during part-full flows when the straight inlet (culvert entrance) was 'gulping' air; and then it was felt just when standing on the head wall of the inlet structure. The feeling was not of vibration but of slight shocks due to the pulsations or surges of the flow."

When describing the Owyhee Dam, Mr. Bradley comments on spray caused by air entrainment. This air is suddenly released through the inlet at heads of from 1 to 2 ft on the gate and through the outlet at higher heads. Apparently Owyhee Dam is the only spillway having a submerged outlet. This is presumably the reason for the phenomena reported. The writer has observed many models in operation but has never observed the air blow-back if the outlet was not submerged. In fact, the air sucked in with the water up to the point where inlet submergence occurs always passed through the conduit without difficulty. Above the point of inlet submergence, only negligible quantities of air enter the spillway through small vortices, and this air passes through the spillway as a mixture.

Spillways of the closed-conduit type have unique flood-control characteristics that can be used advantageously in many cases. Their more frequent use attests to the fact that engineers are recognizing these advantages.

Rodolfo E. Ballester.[11]—The new San Roque Dam in Córdoba, Argentina, a multiple-purpose dam built to protect the city of Córdoba from floods, was first proposed in 1930.[12]

[10] "Drop Structures for Erosion Control," by L. Standish Hall, *Civil Engineering*, Vol. 12, 1942, pp. 247–250.

[11] Cons. Hydr. Engr., Buenos Aires, Argentina.

[12] "Dique San Roque," by R. E. Ballester, C. A. Volpi, and A. Suárez, *La Ingeniería*, Buenos Aires, August–October, 1930, pp. 298–320, 350–385, 394–427, and 463–492.

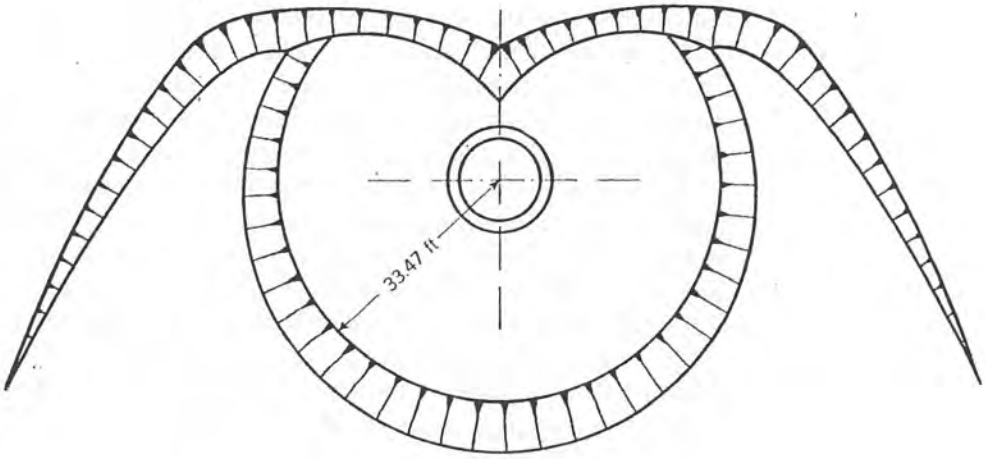

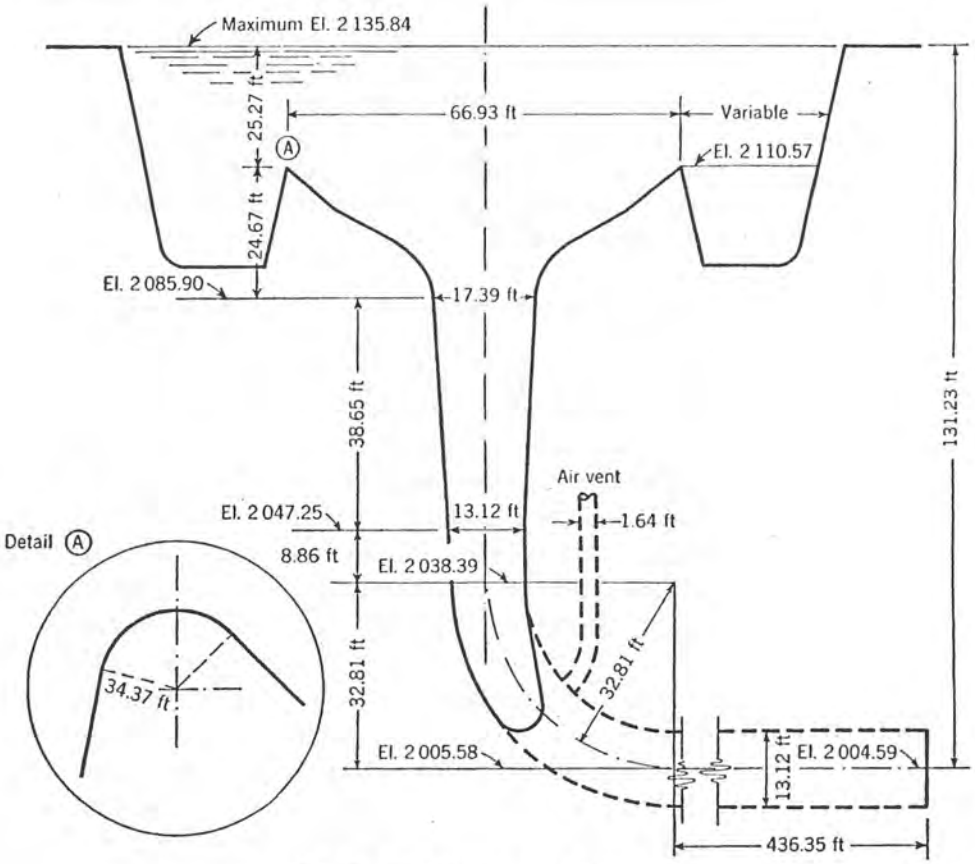

FIG. 25.—SAN ROQUE DAM SPILLWAY

A morning-glory shaft spillway was designed to adjust the discharge from the reservoir to the capacity of the river channel at the city without any gate or mechanism for operation. Construction was begun in 1940 and at that time a study on models was made to establish the best dimensions of the entrance and shaft and to determine pressures and discharges. The results obtained from the model studies[13] were applied to the construction.

From the model tests there was selected the best form of entrance to the shaft in order to prevent the occurrence of a vortex that reduces the discharge of the whole structure with an unnecessary increase of level of the reservoir and that provokes objectionable vibrations. Special attention was given to obtaining submerged-flow operation with the smaller head over the weir sill.

Pressures registered on the model caused the installation of an air-vent pipe of 20-in. diameter from the inner curve of the 90° bend.

The principal dimensions of the spillway are given in Fig. 25. The shaft is 13.1 ft in diameter with a maximum discharge of 10,000 cu ft per sec and a total head of 131 ft. Of this head, 25.3 ft is over the spillway lip. With heads up to 6.0 ft, air is entrained. At a head of 6 ft, submerged flow begins with a discharge of 9,200 cu ft per sec.

Construction of the dam was completed in 1944. In December, 1952, the morning-glory spillway worked for the first time with a head of 0.5 ft. On April 24, 1954, the spillway operated again with a maximum head of 1.35 ft, discharging 920 cu ft per sec. This discharge is only 10% of the maximum capacity. The volume discharged in ten days of operation was 4,050 acre-ft.

These discharges and volumes are too small to yield conclusions on the behavior of the structure. The largest floods entering the reservoir in 1903 and 1923, before the construction of the new dam, have not been duplicated since (as of 1955).

John Wallace Ridley.[14]—The information which Mr. Bradley has collected and presented is extremely valuable, and it is gratifying to know that the morning-glory spillway can be regarded as a sound hydraulic structure. As far as the Manuherikia Falls spillway is concerned, it might be interesting to know that because of the necessity for increased storage it is proposed (1955) to raise the retention level of the spillway by 2 ft. This is being done by constructing a small concrete weir on the outer lip of the spillway. Normally one would have been somewhat reluctant to make such an alteration without further model testing, but in the light of the information presented by Mr. Bradley, particularly as regards gate operation at Owhyee Dam, there should be no difficulty in discharging water at the higher head.

Since the data on the Manuherikia Falls spillway was submitted to Mr. Bradley, the spillway has again operated at minor flows. There is nothing further to report except that erosion of the construction joints at the morning-glory crest is becoming progressively worse mainly because of frost action, and it will be necessary to repair these joints when the concrete weir is added.

[13] "Dique San Roque: Estudios con Modelos Reducidos del Pozo-vertedero," by R. J. Perazzo, *La Ingeniería*, Buenos Aires, October-November, 1941, pp. 1036 and 1114.

[14] Designing Engr., Ministry of Works, Wellington, New Zealand.

One point on which an expression of opinion might be worthwhile is the need for directing piers or vanes. Piers were included at Manuherikia because of the asymmetrical flow conditions shown by the model. However, it is apparent that many morning-glory structures have no guiding piers, and no adverse effects are evident. Owhyee Dam is a case in point where the spillway is asymmetrically placed with respect to topography and adjacent structures and yet its operation appears to be quite satisfactory; on the other hand, Davis Bridge Dam has sixteen guiding piers.

JOSEPH N. BRADLEY,[15] M. ASCE.—The writer is indebted to the discussers of the paper and is grateful for the additional information presented on morning-glory spillway operation. It was informative to learn from Mr. Donelan that an actual underwater inspection was made of the vertical bend and adjoining horizontal tunnel at Kingsley Dam. In the majority of cases inspection has been made by probing with poles or pipes.

Mr. Walter's presentation of the spillway operation at Hungry Horse Dam is of particular interest because this is the largest spillway of this type. The spillway operated for approximately two days. Attention is called to Mr. Walter's discussion concerning the precautions taken in construction of the spillway shaft and vertical bend regarding elimination of construction joints in the bend, elimination of offsets throughout by grinding, and the final sand blasting and finish treatment. It is anticipated that these precautionary measures will, in the long run, materially reduce maintenance costs.

Probing of the Hungry Horse tunnel and vertical bend showed no noticeable erosion of the concrete surfaces. Pressures measured in the throat section of the spillway during operation showed close agreement with those observed on the model; thus, air demand in the prototype is also comparable to that in the model. The lowest pressure measured was 8 ft of water below atmospheric pressure for a discharge of 30,000 cu ft per sec. A point of considerable interest was the action in the river channel downstream. Although the jet leaving the spillway, having an energy content approximating 1.5×10^6 hp, moved a considerable quantity of loose material in the river channel, it did not attack the banks (Figs. 23 and 24). The center line of the spillway was virtually alined with the center line of the river so the jet was aimed straight down the river. Were this not the case, there would certainly have been bank erosion. The erosion discernible on the left bank (Fig. 24) was caused by the jets from three 96-in. outlet valves which are not alined with the center line of the river. The erosion shown is the result of a single season of operation. The results obtained from these tests are invaluable to the profession; Mr. Puls and Mr. Walter are to be highly commended.

The comments of Mr. Blaisdell which relate his experiences with small closed-conduit spillway structures are most interesting. It is a significant fact that trash racks located in close proximity to a closed-conduit spillway usually present a hazard rather than a benefit. As Mr. Blaisdell states, trash collectors should be located well upstream in the lower velocities. Booms

[15] Hydr. Engr., Bureau of Public Roads, U. S. Dept. of Commerce, Washington, D. C.

consisting of a single cable stretched across a river and floated on logs are used on a number of reservoirs of large dams to collect debris. These booms have proved to be effective but, of course, all trash collectors require systematic cleaning.

Although it cannot be stated with absolute certainty, it appears that vortex action observed on models and their prototypes is a linear relationship. Mr. Blaisdell's statement that the horizontal tunnel must be submerged for a morning-glory spillway to belch air from the inlet (Fig. 9) is not corroborated by Mr. Walter who states that the same phenomenon occurred for very small heads on the Hungry Horse spillway, which was free of submergence. The writer attributes the action to the fact that the spillway acts as a chimney through which a strong draft persists when water is not flowing. Very small discharges tend to neutralize or reverse the direction of air flow, resulting in the accumulation of small pressures in the shaft, intermittently permitting re-establishment of the updraft, which carries a small quantity of spray with it.

Appreciation is extended to Mr. Ballester for drawing attention to the spillway at the San Roque Dam on which information was lacking. This structure is interesting in that it is designed to operate submerged with as much as 25 ft of head on the crest. It should be noted that the design was verified or developed by model studies, which has been true of practically every morning-glory spillway constructed to date (1955). Mr. Blaisdell and Mr. Ridley will probably be interested in the absence of antivortex piers on the San Roque spillway, especially for submerged operation. Mr. Ballester does not explain the specific purpose of the 20-in. air pipe which connects to the upper part of the vertical bend. Is it logical to assume that admitting air at this point materially reduces the intensity of vortex action?

Mr. Ridley's cooperation in presenting further information on the Manuherikia Falls spillway is much appreciated. This is apparently the only spillway in which deterioration of the construction joints in the morning-glory and vertical shaft have been reported. Leakage from the reservoir is undoubtedly the principal cause of the difficulty. Mr. Blaisdell's remarks are pertinent to the question asked by Mr. Ridley regarding the value of guide piers on the crest of the spillway. For spillways that operate submerged piers are of definite value. They serve to convert the single large vortex into a number of smaller ones which are less objectionable. Piers, although desired, were not placed on the Owyhee or Hungry Horse spillway crests because of the complexity introduced by the ring gates. Model tests indicated that piers placed upstream from the ring gates were not sufficiently effective to justify their cost. Piers are of questionable value, however, on spillways operating free of submergence and at relatively low heads.

From the information gained from this prototype investigation it appears that the point has probably been reached where model studies can be dispensed with on the more common types of morning-glory spillway design. However, there still remains much to be learned regarding submerged operation, unusual approach conditions, subatmospheric crest pressures, and similar items.

DETERMINATION OF PRESSURE-CONTROLLED PROFILES

By William E. Wagner,[1] M. ASCE

With Discussion by Messrs. Maxwell W. White and Murray B. McPherson; Fred W. Blaisdell; Ibrahim M. Mostafa, Benoyendra Chanda, and Howard P. Johnson; and William E. Wagner

Synopsis

An extensive experimental study was conducted to determine the coefficients of discharge and to establish the shape of the nappe of water flowing over a sharp-crested circular weir for different approach depths and with pressures of varying magnitude beneath the nappe.

The studies were made on a sharp-crested weir approximately 20 in. in diameter, with heads ranging from 0.10 ft to 1.7 ft and with discharges of from 0.5 cu ft per sec to 11.5 cu ft per sec. Approach depths of 20 in., 3 in., and 1½ in. below the weir crest were used. The effect of reducing the pressure on the lower surface of the nappe was also studied by removing air from the cavity under the nappe. Because the discharge coefficients and the profiles of the nappe are expressed as dimensionless ratios the results are in a convenient form for use in designing the overflow section of a morning-glory spillway. To demonstrate the practical use of the experimental data, the results of the study are compared with those of model studies on the morning-glory spillway for Hungry Horse Dam in Montana.

Introduction

With the increasing use of morning-glory shaft spillways, there has developed a general need for additional data to aid the hydraulic engineer in designing such a spillway for the many conditions encountered in the field. Some of the problems that must be solved concern the size and shape of the overflow section, the size of the shaft, the degree of curvature of the bend connecting the shaft with the horizontal tunnel, and the method of stilling the high-velocity flow before it enters the river channel below the dam. Each of these problems is important and requires careful consideration. The problem investigated herein is that of determining the size and shape of the overflow section that will pass the required quantity of water at the desired head and that will provide pressures on the morning-glory profile that are above the cavitation range. To find a solution to this design problem, a circular weir was constructed and tested in the Denver (Colo.) hydraulic laboratory of the Bureau of Reclamation, United

Note.—Published, essentially as printed here, in April, 1954, as *Proceedings-Separate No. 432*. Positions and titles given are those in effect when the paper or discussion was approved for publication in *Transactions*.

[1] Engr., Eng. Labs. Div., Bureau of Reclamation, U. S. Dept. of the Interior, Denver, Colo.

States Department of the Interior (USBR). The sharp-crested weir used in these studies was circular in plan and 20 in. in diameter. Because flow passing over a weir springs clear at the sharp edge, the lower trace of the nappe indicates the shape of the morning-glory surface for given conditions of head above the crest, approach depth, and pressure beneath the nappe.

Discharge coefficients and the shapes of the fully aerated upper and lower nappe surfaces were obtained for three approach depths—20 in., 3 in., and $1\frac{1}{2}$ in. below the crest of the weir. The comparatively shallow depths of 3 in. and $1\frac{1}{2}$ in. were chosen to assure a measurable effect on the discharge and nappe shapes. In addition, the effect on the nappe shape of reducing pressure by removing air from the space under the nappe was studied. The reduced-pressure studies were made for a negligible velocity of approach using the 20-in. approach depth. Data were taken only on an intermediate range of discharges

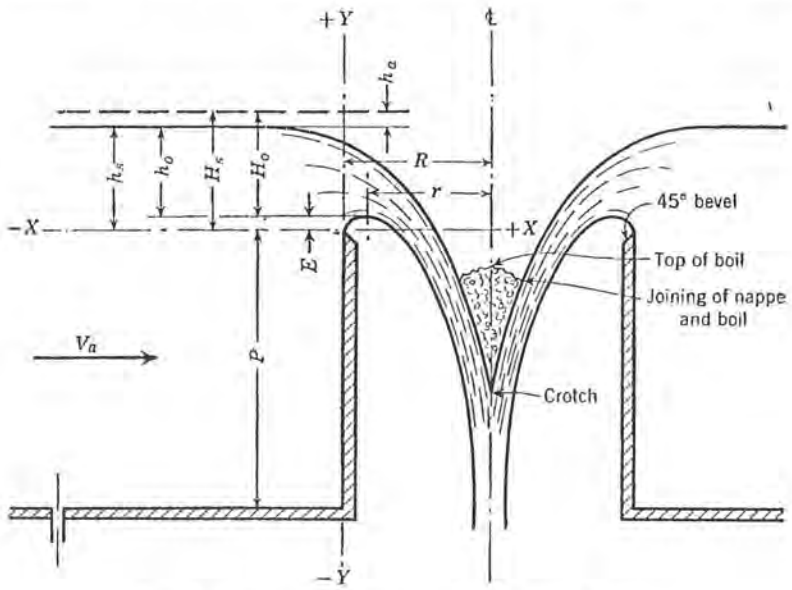

Fig. 1.—Principal Elements of Circular Weir

where a stable jet could be maintained because at both higher and lower discharges pulsations in the nappe made measurement impossible.

The test equipment and the procedures followed in developing a method for determining the shape of the overflow section of a morning-glory spillway are subsequently described. The experimental results are then applied to a working model of the spillway for Hungry Horse Dam in Montana.

In Fig. 1, h_s is the observed head on the weir measured, in feet, 22 in. from the weir crest; V_a denotes the average velocity of approach, in feet per second, computed 22 in. from the weir crest; h_a is the average velocity head, in feet, and is equal to $V^2_a/2\,g$; H_s is equal to h_s plus h_a and is the total head, in feet, above the weir crest; E represents the maximum rise, in feet, of the lower-nappe surface above the sharp crest of the weir; h_o is the observed head, in feet, above the high point on the lower-nappe surface; H_o is equal to h_o plus h_a and is the total head, in feet, above the high point on the lower-nappe surface; R denotes the radius, in feet, of the sharp crest of the test weir; P is the depth, in feet, of the

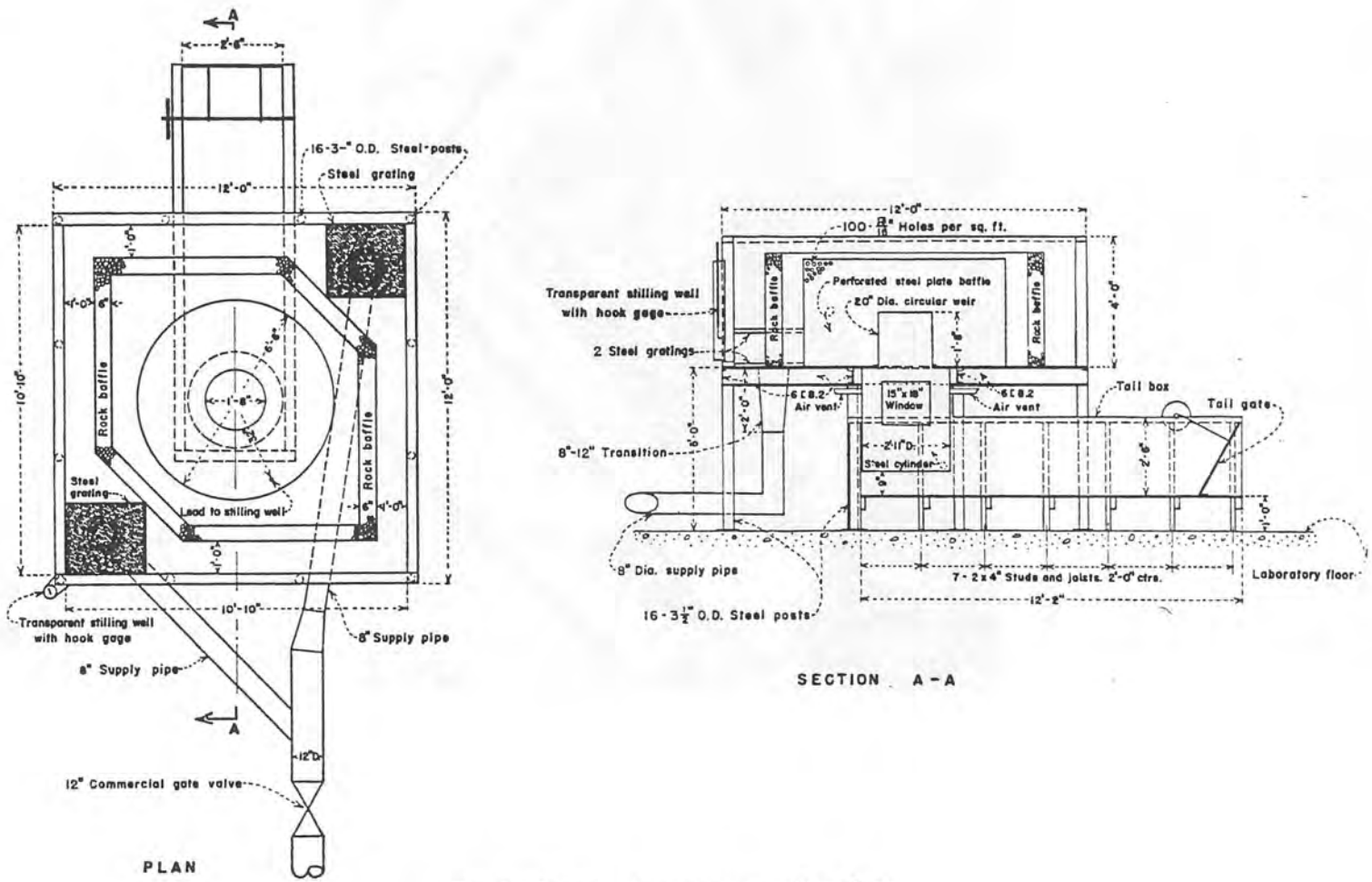

FIG. 2.—GENERAL ARRANGEMENT OF TEST WEIR

approach floor below the weir crest; X denotes the horizontal coordinate (origin at the weir crest, negative upstream and positive toward the center of the test weir), in feet; and Y is the vertical coordinate (positive above and negative below the crest of the weir), in feet.

Test Equipment

The Test Weir.—The general arrangement of the test weir is shown in Figs. 2 and 3. The test weir was fabricated from a 20-in. length of seamless steel pipe having a 20-in. outside diameter with a $\frac{1}{2}$-in. wall. A steel flange for bolting the test weir to the floor of the head box was welded to one end of the cylinder. The outside surface of the other end of the cylinder was machined to form a true circle, 1.6593 ft in diameter. A 45° bevel was then machined from the

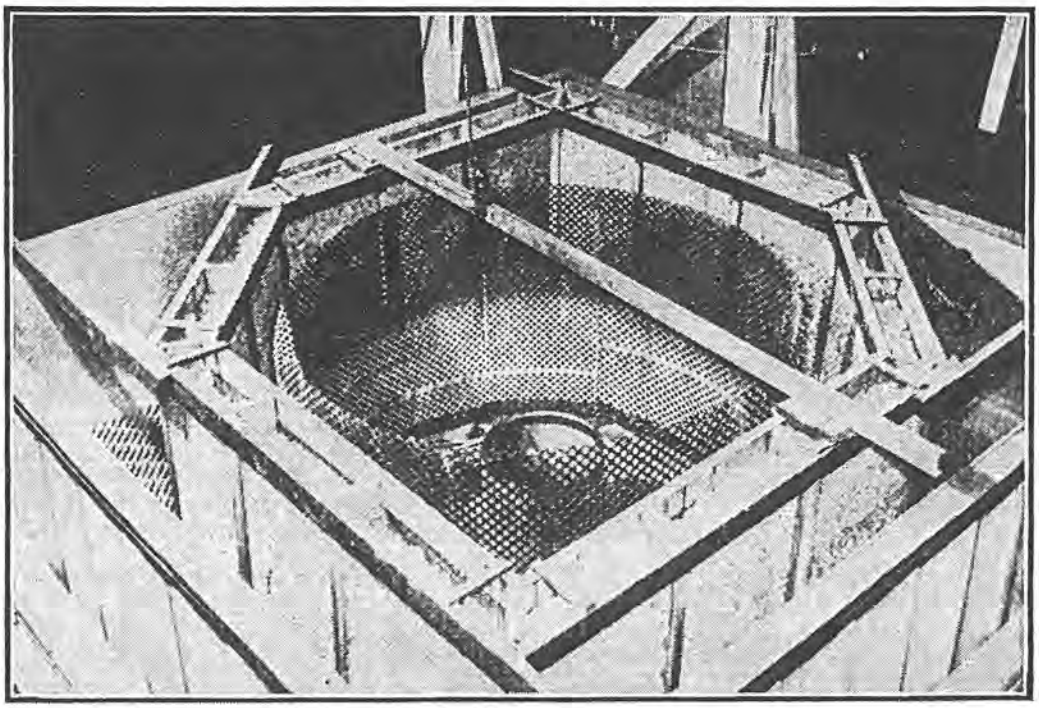

Fig. 3.—General View of Head Box Containing Test Weir

inner face until a knife edge was formed by the intersection of the 45° bevel and the outer machined surface.

The head box, 12 ft square with 4-ft side walls (outside dimensions), was elevated 5 ft above the laboratory floor. The construction of the testing box and weir was sufficiently strong to maintain the weir in a level position when the head box was full of water.

Water was supplied to the head box through two 8-in. inlets which terminated in the floor at diagonal corners of the testing box. Several precautions were taken to assure that the water approached the weir radially and uniformly. A 6-in.-thick baffle containing $\frac{3}{4}$-in. to 1-in. gravel was placed approximately 1 ft from the side walls of the head box (Fig. 3). Two steel gratings were placed over each inlet to reduce the boil and distribute the inflowing water between the side walls of the head box and the gravel baffle. To quiet the flow further

before it passed over the test weir, a perforated cylinder was placed between the gravel baffle and the weir. The perforated cylinder, $6\frac{1}{2}$ ft in diameter and 4 ft high, was made from a 12-gage steel plate punched with one hundred $\frac{13}{16}$-in.-diameter holes per sq ft.

Discharge Measurements.—The discharge over the circular weir was measured with commercial venturi meters, the sizes of which were either 4 in., 6 in., 8 in., or 12 in., depending on the discharge required for the particular test. All the venturi meters were accurately calibrated in the laboratory by the use of a volumetric tank.

Water-Surface Gages.—The head, h_s, on the test weir was measured by a hook gage mounted in a stilling well at the side of the head box. A $\frac{3}{16}$-in.-inside-diameter rubber tube connected the stilling well to the head box at a point 22 in. from the sharp crest of the test weir.

Profiles of the upper water surface over the test weir were made with a point gage mounted on an aluminum channel. Sufficient readings were observed to

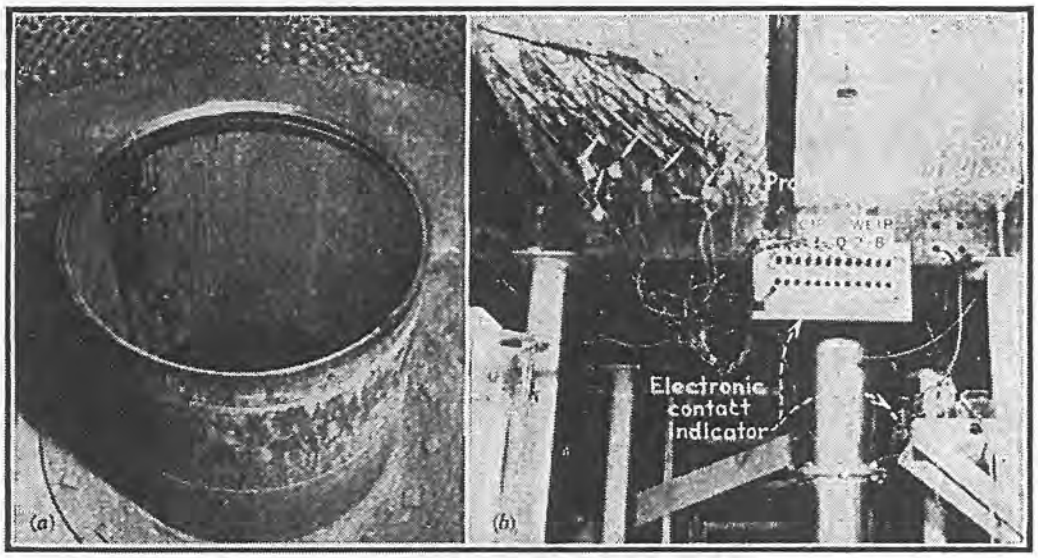

FIG. 4.—APPARATUS FOR OUTLINING LOWER-NAPPE SURFACE

establish a smooth curve describing the shape of the upper-nappe surface. The zero of these gages was checked before and after each set of runs.

To determine the shape of the lower-nappe surface, the profile was outlined by thirteen wire probes extending through the wall of the weir and spaced at various intervals below the crest of the test weir, as shown in Fig. 4(*a*). The end of each probe was positioned along the nappe by screwing the probe toward the sheet of water until contact was made with the lower-nappe surface. Contact of the probe with the nappe was indicated by a 6-volt bulb which lighted when the end of the probe touched the lower-nappe surface. Fig. 4(*b*) shows the probe-adjusting screws and the electronic contact indicator.

The coordinates of the points of each probe outlining the lower-nappe profile were measured with a specially designed point gage (Fig. 5). The gage consisted of a horizontal beam which rested on the crest of the test weir and a vertical bar mounted in a carriage which rode along the horizontal bar The

lower end of the vertical bar was fitted with a point for positioning the gage at the end of the wire probe. The point of the gage was positioned over the probe by moving the carriage horizontally along the beam and lowering the vertical bar until the point contacted the probe.

Altering the Velocity of Approach.—The test weir was constructed with its crest 20 in. from the floor of the head box; most of the data were obtained for this approach depth. However, to determine the effect of the velocity of approach on the coefficient of discharge and the nappe shapes, experiments also were made with approach depths of 3 in. and $1\frac{1}{2}$ in. The approach depth, P, was changed by placing a horizontal false floor between the upstream face of the weir and the perforated cylinder (Fig. 6).

At an approach depth of 20 in., the velocity head, h_a, was less than 0.0005 ft for (H_s/R)-ratios under 0.60 and reached a maximum of 0.0007 ft for an

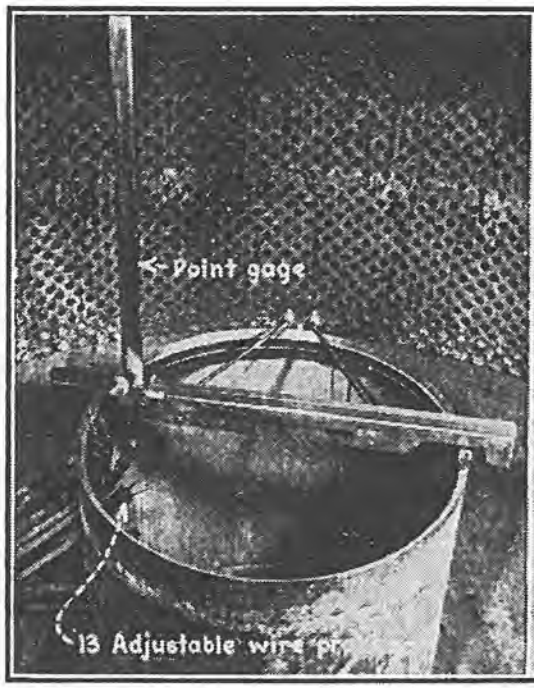

Fig. 5.—Point Gage for Measuring Probe Coordinates

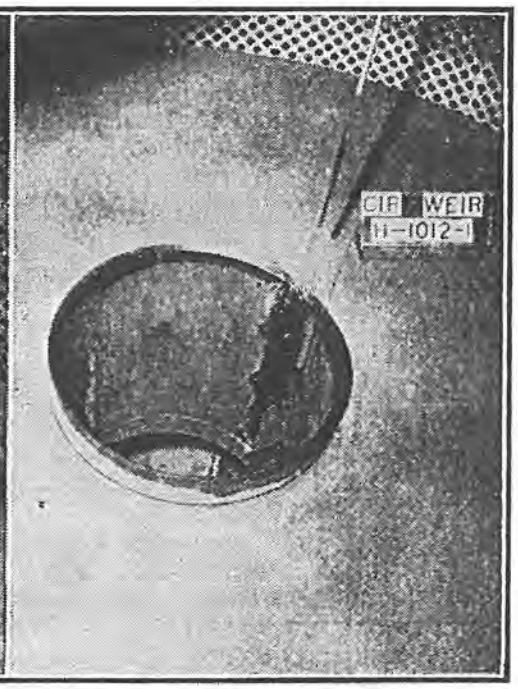

Fig. 6.—Test Weir with Approach Depth of 3 In.

(H_s/R)-ratio of 2.00. Therefore, the effect of velocity head was considered negligible for data obtained with the 20-in. approach depth. For the 3-in. approach depth, the velocity head varied from 0.001 ft to 0.004 ft and from 0.001 ft to 0.005 ft for the $1\frac{1}{2}$-in. approach depth.

Reducing the Pressure Under the Nappe.—To study the effect of subatmospheric pressures under the nappe, a sheet-metal cylinder—35 in. in diameter, 3 ft long, and flanged at one end—was bolted to the underside of the head box concentric with the test weir (Fig. 7). The lower end of the cylinder was approximately 9 in. from the floor of the tail box. The water surface in the tail box could be raised by a tail gate to submerge the end of the cylinder, thus sealing the air chamber between the falling jet and the cylinder walls. The jet, in falling, pumped some of the air from the chamber and reduced the pressure in

the space beneath the nappe. Two vents, each 3 in. in diameter and equipped with gate valves, were placed in the wall of the cylinder. By controlling the air entering the chamber, a fairly stable pressure could be maintained under the nappe. For the lower pressures and discharges, it was found necessary to connect a vacuum line to the chamber to secure the desired pressure.

The pressure in the chamber was measured by a differential U-tube manometer filled with water. The legs of the manometer were tilted at a 45° angle to permit reading of the differential pressure to 0.001 ft.

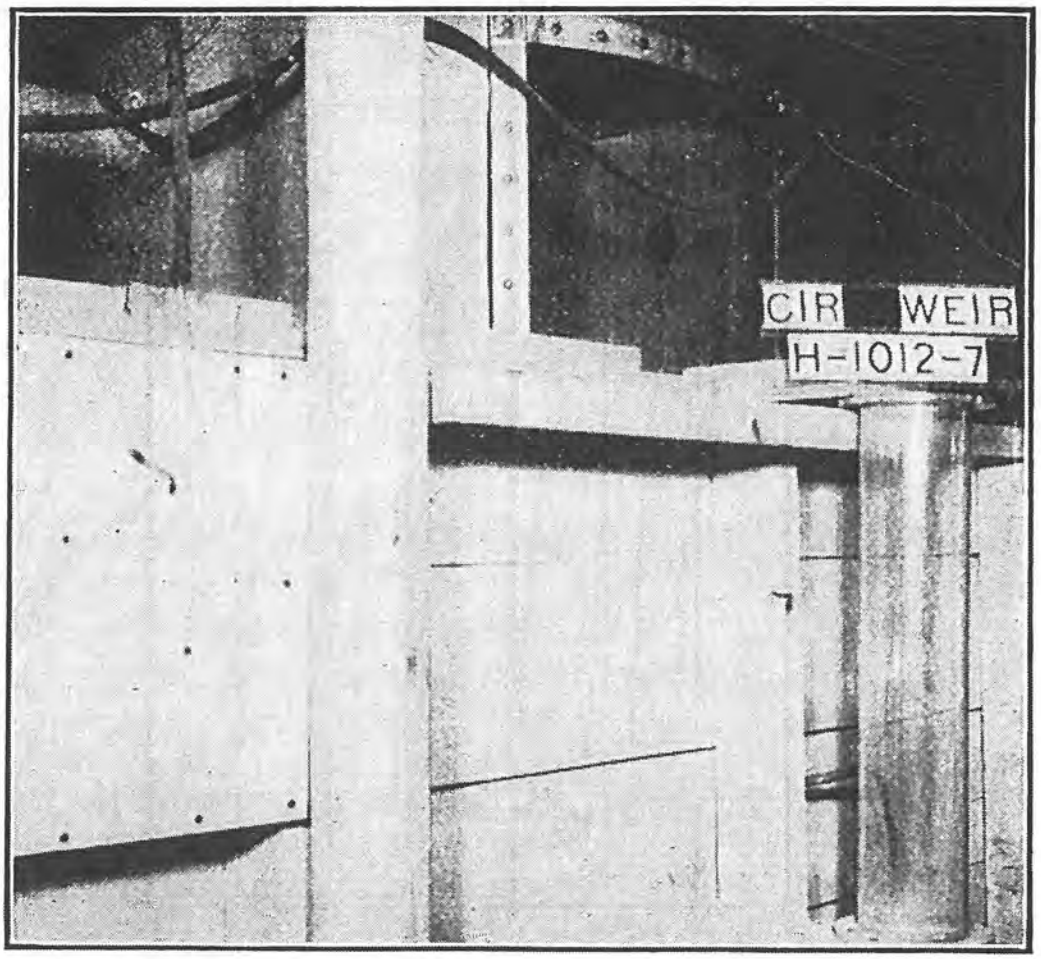

FIG. 7.—TAIL BOX AND CYLINDER FOR REDUCING PRESSURE UNDER THE NAPPE

INTERPRETATION OF RESULTS

Discharge Coefficient.—Flow over a circular weir can be classified as either free or submerged. For free flow, the discharge characteristics are similar to those of a rectangular weir—

$$Q = C\,L\,H^{3/2}_s \qquad (1)$$

in which Q is the flow, in cubic feet per second; C denotes a discharge coefficient; and L is the crest length, in feet. Thus, the theoretical discharge is proportional to the three-halves power of the head, H_s, on the weir.

When the discharge increases until the water surface is practically level above the weir, the weir becomes a re-entrant tube and the theoretical discharge follows the form,

$$Q = C_o A_o \sqrt{2\,g\,H_s} \qquad (2)$$

At tube flow, an increase in head results in a very limited increase in discharge as the theoretical discharge is then proportional to the square root of the head. For partial submergence, the discharge coefficient, C or C_o, changes more

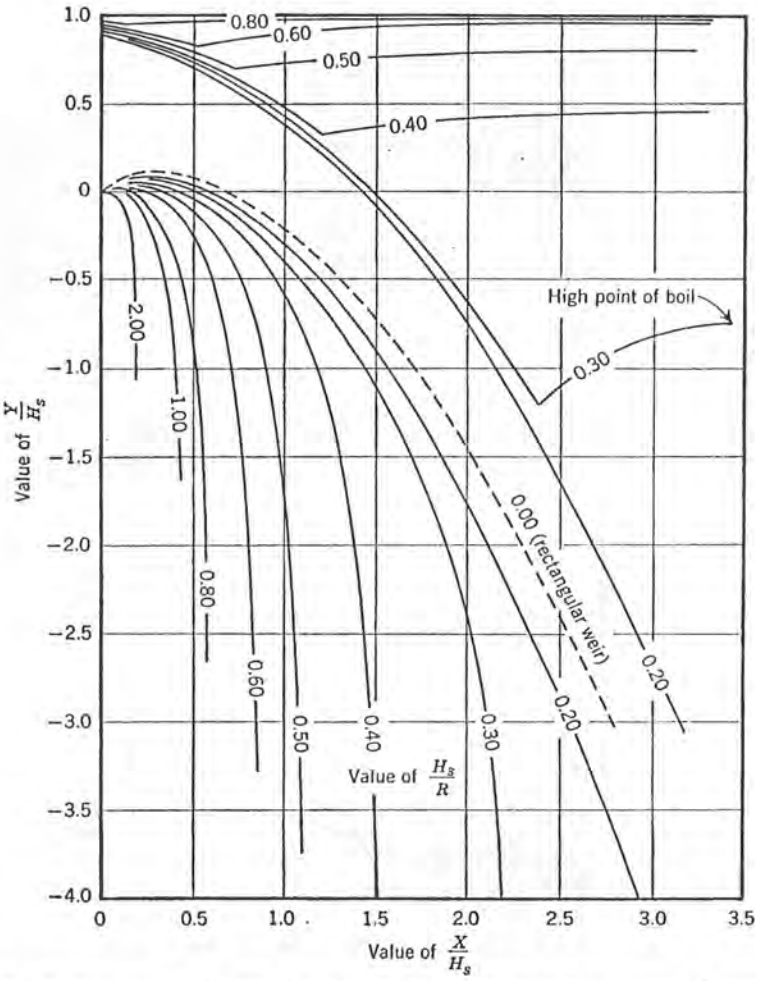

FIG. 8.—TYPICAL UPPER-NAPPE AND LOWER-NAPPE SURFACES (AERATED NAPPE AND NEGLIGIBLE VELOCITY OF APPROACH)

rapidly with head, and the discharge characteristics follow neither Eq. 1 nor Eq. 2.

Because the point where weir flow ends and tube flow begins is difficult to define and in order to simplify the method of expressing the coefficient of discharge, Eq. 1 was used to compute the discharge coefficients throughout the range of testing. The weir formula was chosen because most morning-glory spillways are designed for free flow.

Nappe Profiles.—From the laws of similitude, it can be shown that the profiles of sheets of water flowing over any two sharp-crested, circular weirs with

aerated nappes and negligible velocities of approach are similar if the respective ratios of the head, H_s, to the radius, R, of the weirs are the same. Thus, by expressing the X- and Y-coordinates of the nappe surfaces and the radius of the weir in terms of H_s, the results are in dimensionless form, and the nappe shape for any head and radius of weir can be determined. C. S. Camp and J. W. Howe,[2] found in their experiments on three weir arcs of different radii that

> "* * * nappe profiles plotted in terms of these dimensionless coordinates proved to be practically identical for runs having the same ratio of head to diameter of weir arc except in those runs in which the head was so low that the nappe adhered to the crest."

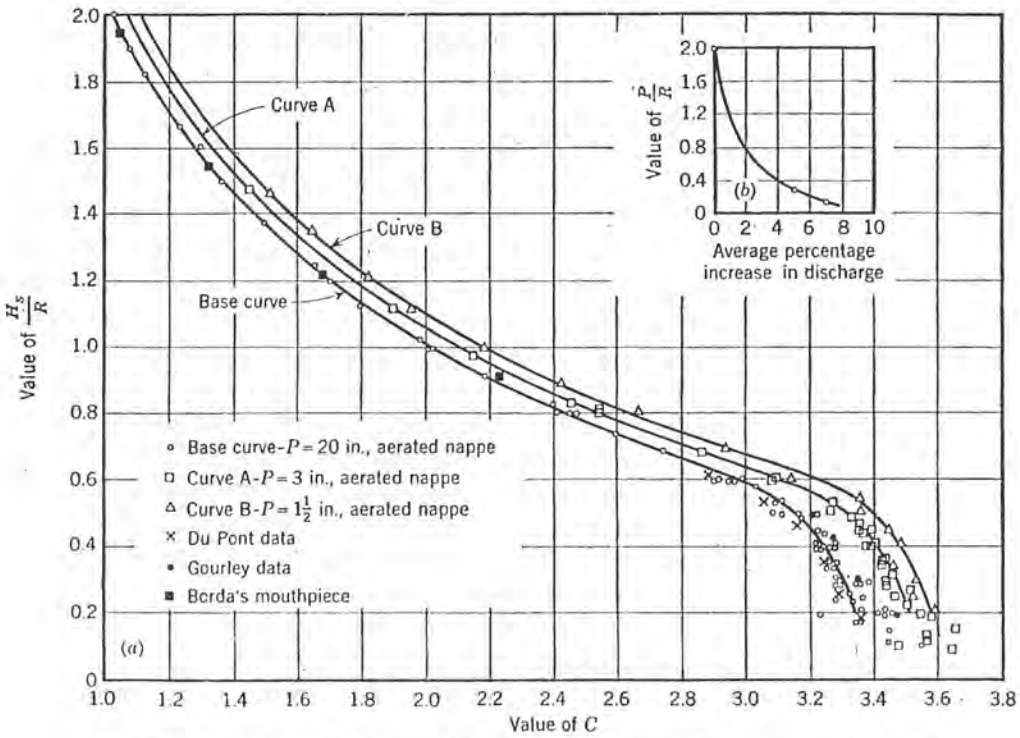

FIG. 9.—RELATIONSHIP BETWEEN H_s/R TO C FOR DIFFERENT APPROACH DEPTHS P

This method was used in plotting the upper and lower surfaces of the nappe. The X- and Y-coordinates of the nappe surfaces obtained from the test weir were divided by H_s and plotted with as many as three runs for each value of H_s/R; an average line was drawn through the points and Fig. 8 illustrates the shapes of the curves. The (X/H_s)-coordinates and the (Y/H_s)-coordinates are presented subsequently in Tables 1 through 6.

ANALYSIS OF RESULTS

Discharge Coefficients.—The relationship between the coefficient of discharge, C, and the dimensionless ratio, H_s/R, for three approach depths is plotted in Fig. 9(*a*). In each case, the lower surface of the nappe was open to the atmosphere and fully aerated. The lower curve, designated as the base curve, shows the discharge coefficient for (H_s/R)-ratios between 0.20 and 2.00

[2] "Tests of Circular Weirs," by C. S. Camp and J. W. Howe, *Civil Engineering*, Vol. 9, 1939, pp. 247–248.

with the approach floor 20 in. below the weir crest or with negligible velocity of approach.

Referring to Figs. 8 and 9(*a*), the flow apparently is free for (H_s/R)-ratios less than 0.45. In the range of free flow, the discharge coefficient decreases almost linearly from 3.34 to 3.20 between (H_s/R)-ratios of 0.20 and 0.45. These coefficients compare favorably with results obtained by other experimenters.[2,3,4]

As the (H_s/R)-ratio increases above 0.45, the weir becomes partly submerged and there is a sharp reduction in the coefficient of discharge. The largest change in coefficient for a relatively small increase in H_s/R occurs for (H_s/R)-ratios between 0.45 and 1.00, the range in which the weir is partly submerged. For H_s/R greater than 1.00, the water surface above the weir is practically level and the flow is submerged.

The two upper curves, A and B, in Fig. 9(*a*) are similar plots indicating the coefficient of discharge when the approach velocity is appreciable. Curve A was plotted from data obtained with the approach floor 3 in. below the weir crest, and curve B with an approach depth of 1.5 in. The 3-in. approach depth increased the discharge coefficient approximately 5% over the base curve in the free-flow range of discharges and 4% in the range of submerged flow; the 1.5-in. approach depth increased the coefficients approximately 7% and 8%, respectively, for the two ranges.

In Fig. 9(*b*) the average percentage increase in discharge is plotted against the approach depth, P, in terms of the radius of the weir. This curve, which is applicable to either free flow or submerged flow, indicates the increase in discharge which can be expected when the approach velocity is increased (or the approach depth decreased) using the discharge for negligible velocity of approach as the base. It is evident that additional experimental data are needed in the range of (P/R)-ratios between 0.3 and 1.0 to establish the curve fully. However, the curve indicates the approximate increase in discharge as the approach depth decreases.

Fig. 10 is a plot similar to Fig. 9 and shows the relationship of various pressures beneath the nappe and the discharge for the case of a negligible velocity of approach. Fig. 10(*a*) shows the discharge coefficient versus (H_s/R)-ratios for atmospheric pressure and for partial vacuums of 10%, 20%, 30%, 40%, and 50% under the nappe. The partial vacuums are expressed as ratios of the average vacuum—measured in feet of water in the air chamber beneath the nappe—to the head, H_s, on the weir. The solid lines indicate the part of the curve verified by experimental data, and the dotted lines indicate the estimated extension of the curves beyond the limits of the experiments.

Fig. 10(*b*) was plotted from the data contained in Fig. 10(*a*). The percentage increase in discharge above that indicated by the base curve was computed for (H_s/R)-ratios of 0.3, 0.4, and for 0.5 and 10% to 50% vacuums. The computed percentages for each of the five vacuums were averaged and plotted as shown in Fig. 10(*b*). Fig. 10(*b*) indicates the average increase in discharge for

[3] "Experiments on the Flow of Water Over Sharp-Edged Circular Weirs," by H. J. F. Gourley, *Proceedings*, Inst. of C. E., London, Vol. CLXXXIV, 1911, pp. 297–317.

[4] "Determination of the Under Nappe over a Sharp Crested Weir, Circular in Plan with Radial Approach," by R. B. duPont, thesis presented to Case School of Applied Science, Cleveland, Ohio, in 1937, in partial fulfilment of the requirements for the degree of Bachelor of Science in Civil Engineering.

different pressures beneath the nappe. The relationship is applicable only in the range of free flow as no tests with partial vacuums were made when the weir was flowing submerged. The curves in Fig. 10 should be used with reservation as they are based on meager experimental data.

The minimum value of the (H_s/R)-ratio, for which discharge coefficients are shown in Figs. 9 and 10, is 0.20. It was found that for runs with heads less than 0.15 ft the discharge coefficient was inconsistent and tended to increase as the head decreased. At low heads, surface tension of the water affects the flow characteristics by preventing the jet from springing clear at the sharp-edged crest of the weir. It is difficult to define the limits of this effect as the sharpness of the weir or a small quantity of oil can change its intensity. In summarizing the results of several experimenters, Mr. Howe showed[5] graphically that the discharge coefficient for a rectangular weir increases sharply for heads less than 0.20 ft, thus indicating the heads at which surface tension affects discharge. Therefore, the coefficients for the test weir are shown only for heads above the region of low flow.

Nappe Profiles.—Fig. 8 shows the general shapes of the upper and lower surfaces of the nappe expressed in terms of head with an aerated nappe and a

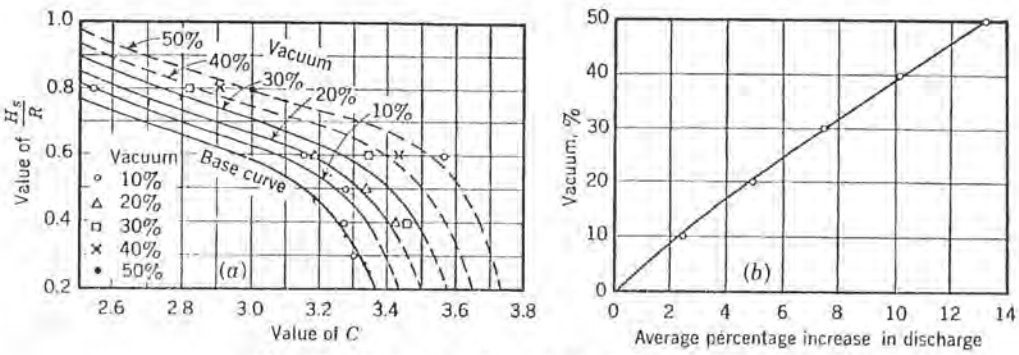

FIG. 10.—EFFECT OF VACUUM ON Q, H_s/R, AND C

negligible velocity of approach for representative (H_s/R)-ratios. Also included in Fig. 8 is the shape of the lower-nappe surface developed[6] by the USBR for the rectangular weir, which may be considered a circular weir having an infinite radius $(H_s/R = 0)$.

Several attempts were made to obtain a profile for $H_s/R = 0.10$ (or a head of 0.083 ft on the test weir), but all the measured profiles for this head were comparatively flat near the weir crest and inconsistent with the other results, indicating that the nappe adhered to the weir crest. In Table 1 the coordinates for $H_s/R = 0.10$ are shown, but the profile was determined by interpolation between $H_s/R = 0.20$ and $H_s/R = 0$ rather than by actual nappe measurements on the test weir.

The lower-nappe traces expressed in dimensionless coordinates in Fig. 8 give a false impression as to the actual shape of the lower surface for different heads as the coordinates in terms of the head, H_s, become progressively less as

[5] "Engineering Hydraulics," edited by Hunter Rouse, John Wiley & Sons, Inc., New York, N. Y., 1950, p. 214.

[6] "Studies of Crests for Overfall Dams," *Bulletin No. 3*, Boulder Canyon Project Final Reports, Bureau of Reclamation, U. S. Dept. of the Interior, Denver, Colo., Pt. VI, 1948.

TABLE 1.—COORDINATES OF LOWER NAPPE SURFACE FOR NEGLIGIBLE APPROACH VELOCITY AND AERATED NAPPE

$\frac{X}{H_s}$ \ $\frac{H_s}{R}$	0.00	*0.10	0.20	0.25	0.30	0.35	0.40	0.45	0.50	0.60	0.80	1.00	1.20	1.50	2.00
	$\frac{Y}{H_s}$														
0.000	0.0000	0.0000	0.0000	0.0000	0.0000	0.0000	0.0000	0.0000	0.0000	0.0000	0.0000	0.0000	0.0000	0.0000	0.0000
.010	.0150	.0145	.0133	.0130	.0128	.0125	.0122	.0119	.0116	.0112	.0104	.0095	.0086	.0077	.0070
.020	.0280	.0265	.0250	.0243	.0236	.0231	.0225	.0220	.0213	.0202	.0180	.0159	.0140	.0115	.0090
.030	.0395	.0365	.0350	.0337	.0327	.0317	.0308	.0299	.0289	.0270	.0231	.0198	.0168	.0126	.0085
.040	.0490	.0460	.0435	.0417	.0403	.0389	.0377	.0363	.0351	.0324	.0258	.0220	.0176	.0117	.0050
.050	.0575	.0535	.0506	.0487	.0471	.0454	.0436	.0420	.0402	.0368	.0292	.0226	.0168	.0092	
.060	.0650	.0605	.0570	.0550	.0531	.0510	.0489	.0470	.0448	.0404	.0305	.0220	.0147	.0053	
.070	.0710	.0665	.0627	.0605	.0584	.0560	.0537	.0514	.0487	.0432	.0308	.0201	.0114	.0001	
.080	.0765	.0710	.0677	.0655	.0630	.0603	.0578	.0550	.0521	.0455	.0301	.0172	.0070		
.090	.0820	.0765	.0722	.0696	.0670	.0640	.0613	.0581	.0549	.0471	.0287	.0135	.0018		
.100	.0860	.0810	.0762	.0734	.0705	.0672	.0642	.0606	.0570	.0482	.0264	.0089			
.120	.0940	.0880	.0826	.0790	.0758	.0720	.0683	.0640	.0596	.0483	.0195				
.140	.1000	.0935	.0872	.0829	.0792	.0750	.0705	.0654	.0599	.0460	.0101				
.160	.1045	.0980	.0905	.0855	.0812	.0765	.0710	.0651	.0585	.0418					
.180	.1080	.1010	.0927	.0872	.0820	.0766	.0705	.0637	.0559	.0361					
.200	.1105	.1025	.0938	.0877	.0819	.0756	.0688	.0611	.0521	.0292					
.250	.1120	.1035	.0926	.0850	.0773	.0683	.0596	.0495	.0380	.0068					
.300	.1105	.1000	.0850	.0764	.0668	.0559	.0446	.0327	.0174						
.350	.1060	.0930	.0750	.0650	.0540	.0410	.0280	.0125							
.400	.0970	.0830	.0620	.0500	.0365	.0220	.0060								
.450	.0845	.0700	.0450	.0310	.0170	.000									
.500	.0700	.0520	.0250	.0100											
.550	.0520	.0320	.0020												
.600	.0320	.0080													
.650	.0090														

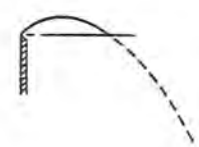

Note: The above tabulation is for that portion of the profile above the weir crest.

$\frac{Y}{H_s}$ \ $\frac{H_s}{R}$	$\frac{X}{H_s}$ 0.00	0.10	0.20	0.25	0.30	0.35	0.40	0.45	0.50	0.60	0.80	1.00	1.20	1.50	2.00
0.000	0.668	0.615	0.554	0.520	0.487	0.450	0.413	0.376	0.334	0.262	0.158	0.116	0.093	0.070	0.048
-0.020	0.705	0.652	0.592	0.560	0.526	0.488	0.452	0.414	0.369	.293	.185	.145	.120	.096	.074
-0.040	0.742	0.688	0.627	0.596	0.563	0.524	0.487	0.448	0.400	.320	.212	.165	.140	.115	.088
-0.060	0.777	0.720	0.660	0.630	0.596	0.557	0.519	0.478	0.428	.342	.232	.182	.155	.129	.100
-0.080	0.808	0.752	0.692	0.662	0.628	0.589	0.549	0.506	0.454	.363	.250	.197	.169	.140	.110
-0.100	0.838	0.784	0.722	0.692	0.657	0.618	0.577	0.532	0.478	.381	.266	.210	.180	.150	.118
-0.150	0.913	0.857	0.793	0.762	0.725	0.686	0.641	0.589	0.531	.423	.299	.238	.204	.170	.132
-0.200	0.978	0.925	0.860	0.826	0.790	0.745	0.698	0.640	0.575	.459	.326	.260	.224	.184	.144
-0.250	1.040	0.985	0.919	0.883	0.847	0.801	0.750	0.683	0.613	.490	.348	.280	.239	.196	.153
-0.300	1.100	1.043	0.976	0.941	0.900	0.852	0.797	0.722	0.648	.518	.368	.296	.251	.206	.160
-0.400	1.207	1.150	1.079	1.041	1.000	0.944	0.880	0.791	0.706	.562	.400	.322	.271	.220	.168
-0.500	1.308	1.246	1.172	1.131	1.087	1.027	0.951	0.849	0.753	.598	.427	.342	.287	.232	.173
-0.600	1.397	1.335	1.260	1.215	1.167	1.102	1.012	0.898	0.793	.627	.449	.359	.300	.240	.179
-0.800	1.563	1.500	1.422	1.369	1.312	1.231	1.112	0.974	0.854	.673	.482	.384	.320	.253	.184
-1.000	1.713	1.646	1.564	1.508	1.440	1.337	1.189	1.030	0.899	.710	.508	.402	.332	.260	.188
-1.200	1.846	1.780	1.691	1.635	1.553	1.422	1.248	1.074	0.933	.739	.528	.417	.340	.266	
-1.400	1.970	1.903	1.808	1.748	1.653	1.492	1.293	1.108	0.963	.760	.542	.423	.344		
-1.600	2.085	2.020	1.918	1.855	1.742	1.548	1.330	1.133	0.988	.780	.553	.430			
-1.800	2.196	2.130	2.024	1.957	1.821	1.591	1.358	1.158	1.008	.797	.563	.433			
-2.000	2.302	2.234	2.126	2.053	1.891	1.630	1.381	1.180	1.025	.810	.572				
-2.500	2.557	2.475	2.354	2.266	2.027	1.701	1.430	1.221	1.059	.838	.588				
-3.000	2.778	2.700	2.559	2.428	2.119	1.748	1.468	1.252	1.086	.853					
-3.500		2.916	2.749	2.541	2.171	1.777	1.489	1.267	1.102						
-4.000		3.114	2.914	2.620	2.201	1.796	1.500	1.280							
-4.500		3.306	3.053	2.682	2.220	1.806	1.509								
-5.000		3.488	3.178	2.734	2.227	1.811									
-5.500		3.653	3.294	2.779	2.229										
-6.000		3.820	3.405	2.812	2.232										

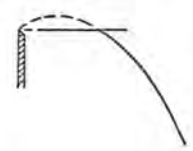

Note: The above tabulation is for that portion of the profile below the weir crest.

H_s increases. To illustrate the shape of the nappe as the head increases, typical lower-nappe traces expressed as true X- and Y-coordinates for several (H_s/R)-ratios are shown for the test weir in Fig. 11.

In the case of the rectangular weir, the lower-nappe traces spring farther from the weir crest as the head increases. This is not true, however, with the circular weir. In Fig. 11, it can be seen that for an increase in head or (H_s/R)-ratio the profile springs farther from the weir crest only in the region of the high point of the trace. Below the weir crest the traces cross, and the profile for the higher head falls inside those for the lower head. Therefore, if a morning-glory spillway is designed for the maximum head, it appears that subatmospheric pressures along the lower part of the trace will occur for heads less than maxi-

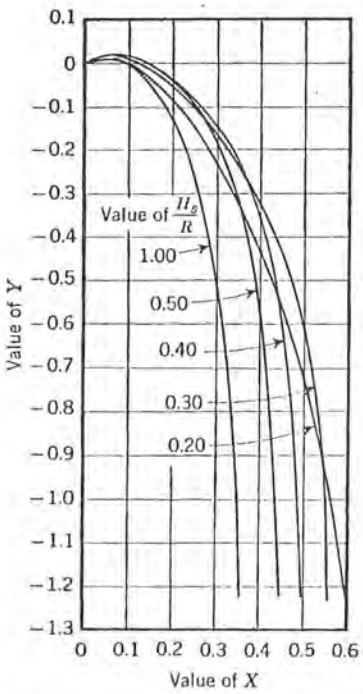

FIG. 11.—TYPICAL LOWER-NAPPE PROFILES

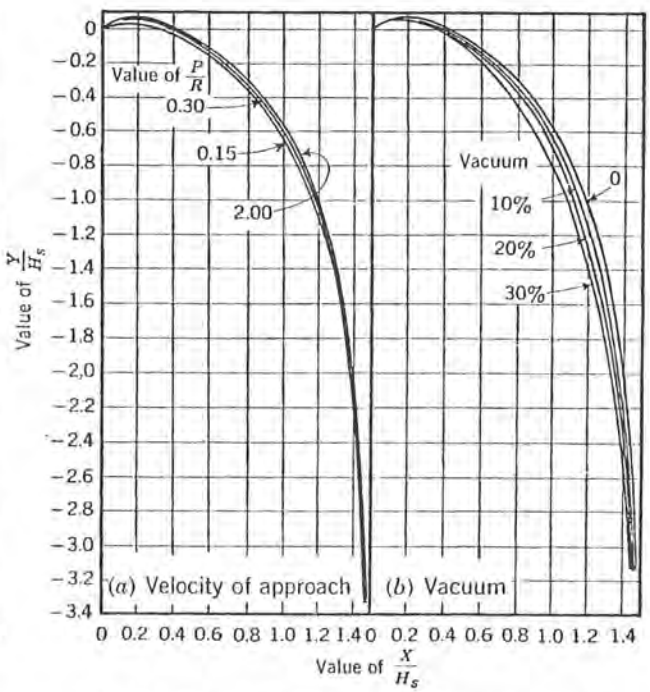

FIG. 12.—EFFECT OF VELOCITY OF APPROACH AND VACUUM ON LOWER-NAPPE PROFILES

mum. To determine the extent of the subatmospheric pressures for different (H_s/R)-ratios was beyond the scope of these experiments. However, model tests on the morning-glory spillway at Hungry Horse Dam disclosed that any reduction in pressure for heads less than the design head could not be discerned on the model.[7]

Hungry Horse Dam spillway was designed for a maximum discharge of 53,000 cu ft per sec at a head of 16.9 ft, an (H_s/R)-ratio of approximately 0.50, and a 30% vacuum crest. Pressures observed on the model crest averaged approximately 5 ft, 3 ft, and 1.5 ft of water (prototype) below atmospheric for discharges of 50,000 cu ft per sec, 35,000 cu ft per sec, and 15,000 cu ft per sec, respectively. The observed absolute pressure at all piezometers along the

[7] "Hydraulic Model Studies of the Morning-Glory Spillway for Hungry Horse Dam," by G. L. Beichley, *Hydraulic Laboratory Report No. Hyd.-355*, Bureau of Reclamation, U. S. Dept. of the Interior, Denver, Colo., April 23, 1954.

spillway crest increased with each lower head or discharge. This example is inconclusive for the entire range of (H_s/R)-ratios but it indicates that spillway crests designed for (H_s/R)-ratios less than 0.50 will operate at approximately atmospheric pressure for discharges lower than the maximum.

The (X/H_s)-coordinates and (Y/H_s)-coordinates of the lower-nappe surface for (H_s/R)-ratios from 0 to 2.0 with fully aerated nappe and negligible velocity of approach are presented in Table 1.

The effects of the velocity of approach on the lower-nappe surface are shown in Fig. 12(*a*), where the profiles for (P/R)-ratios of 2.0 (negligible approach velocity), 0.30, and 0.15 are plotted for an (H_s/R)-ratio of 0.40—which is typical of the profiles obtained for other (H_s/R)-ratios. As the approach velocity increases (or as P/R decreases), the contraction of the jet decreases and the nappe falls closer to the weir crest. A solid jet forms below the weir crest, and the lower-nappe profiles become similar in shape—the profile for the higher approach velocity falling slightly inside the profile for the lower velocity of approach. Below the point where a solid jet forms, the location of the lower-nappe surface is governed by the diameter of jet necessary to accommodate the discharge.

Lower-nappe shapes for an appreciable velocity of approach with a fully aerated nappe are presented in Table 2.

Fig. 12(*b*) shows the profiles for $H_s/R = 0.40$ with a partial vacuum under the nappe. In general, the profiles are similar in shape but not as flat near the crest as those obtained with a significant velocity of approach. As the pressure under the nappe is decreased, the profiles for a constant head fall progressively closer to the weir wall. That is, the diameter (or area) of the jet at any point along the profile becomes progressively greater as the pressure under the nappe is decreased.

The (X/H_s)-coordinates and (Y/H_s)-coordinates of the lower-nappe profile for a negligible velocity of approach and a partial vacuum under the nappe are given in Table 3.

Under-nappe profiles in dimensionless coordinates for a negligible approach velocity and an aerated nappe are presented in Table 4. The water surface is level for (H_s/R)-ratios greater than 1.0.

The effect on the upper-nappe profiles of lowered pressures beneath the nappe and increased velocity of approach was similar to that observed on the lower-nappe shapes. After passing the weir crest, the upper water surface fell progressively lower for each increasing vacuum beneath the jet, and when the approach velocity was increased a higher upper-nappe surface and boil were observed.

The (X/H_s)-coordinates and (Y/H_s)-coordinates of the upper water surface are given in Table 5 for an aerated nappe and approach depths of $P/R = 0.30$ and 0.15, and in Table 6 there are recorded similar upper-nappe shapes with a negligible approach velocity for vacuums of 10%, 20%, and 30% beneath the nappe.

Relationship of Rise and Discharge to Radius.—In these experiments, the discharge over the sharp-crested weir was computed in terms of H_s. In designing the overflow section of a morning-glory spillway, it is usually more convenient to begin the computations with H_o, the total head above the spillway

TABLE 2.—COORDINATES OF LOWER NAPPE SURFACE FOR AERATED NAPPE

$\frac{X}{H_s}$ \ $\frac{H_s}{R}$	$\frac{Y}{H_s}$ $\frac{P}{R} = 0.30$									$\frac{Y}{H_s}$ $\frac{P}{R} = 0.15$								
	0.20	0.25	0.30	0.35	0.40	0.45	0.50	0.60	0.80	0.20	0.25	0.30	0.35	0.40	0.45	0.50	0.60	0.80
0.000	0.0000	0.0000	0.0000	0.0000	0.0000	0.0000	0.0000	0.0000	0.0000	0.0000	0.0000	0.0000	0.0000	0.0000	0.0000	0.0000	0.0000	0.0000
.010	.0130	.0130	.0130	.0125	.0120	.0120	.0115	.0110	.0100	.0120	.0120	.0115	.0115	.0110	.0110	.0105	.0100	.0090
.020	.0245	.0242	.0240	.0235	.0225	.0210	.0195	.0180	.0170	.0210	.0200	.0195	.0190	.0185	.0180	.0170	.0160	.0140
.030	.0340	.0335	.0330	.0320	.0300	.0290	.0270	.0240	.0210	.0285	.0270	.0265	.0260	.0250	.0235	.0225	.0200	.0165
.040	.0415	.0411	.0390	.0380	.0365	.0350	.0320	.0285	.0240	.0345	.0335	.0325	.0310	.0300	.0285	.0265	.0230	.0170
.050	.0495	.0470	.0455	.0440	.0420	.0395	.0370	.0325	.0245	.0405	.0385	.0375	.0360	.0345	.0320	.0300	.0250	.0170
.060	.0560	.0530	.0505	.0490	.0460	.0440	.0405	.0350	.0250	.0450	.0430	.0420	.0400	.0380	.0355	.0330	.0265	.0165
.070	.0610	.0575	.0550	.0530	.0500	.0470	.0440	.0370	.0245	.0495	.0470	.0455	.0430	.0410	.0380	.0350	.0270	.0150
.080	.0660	.0620	.0590	.0565	.0530	.0500	.0460	.0385	.0235	.0525	.0500	.0485	.0460	.0435	.0400	.0365	.0270	.0130
.090	.0705	.0660	.0625	.0595	.0550	.0520	.0480	.0390	.0215	.0560	.0530	.0510	.0480	.0455	.0420	.0370	.0265	.0100
.100	.0740	.0690	.0660	.0620	.0575	.0540	.0500	.0395	.0190	.0590	.0560	.0535	.0500	.0465	.0425	.0375	.0255	.0065
.120	.0800	.0750	.0705	.0650	.0600	.0560	.0510	.0380	.0120	.0630	.0600	.0570	.0520	.0480	.0435	.0365	.0220	
.140	.0840	.0790	.0735	.0670	.0615	.0560	.0515	.0355	.0020	.0660	.0620	.0585	.0525	.0475	.0425	.0345	.0175	
.160	.0870	.0810	.0750	.0675	.0610	.0550	.0500	.0310		.0670	.0635	.0590	.0520	.0460	.0400	.0305	.0110	
.180	.0885	.0820	.0755	.0675	.0600	.0535	.0475	.0250		.0675	.0635	.0580	.0500	.0435	.0365	.0260	.0040	
.200	.0885	.0820	.0745	.0660	.0575	.0505	.0435	.0180		.0670	.0625	.0560	.0465	.0395	.0320	.0200		
.250	.0855	.0765	.0685	.0590	.0480	.0390	.0270			.0615	.0560	.0470	.0360	.0265	.0160	.0015		
.300	.0780	.0670	.0580	.0460	.0340	.0220	.0050			.0520	.0440	.0330	.0210	.0100				
.350	.0660	.0540	.0425	.0295	.0150					.0380	.0285	.0165	.0030					
.400	.0495	.0370	.0240	.0100						.0210	.0090							
.450	.0300	.0170	.0025							.0015								
.500	.0090	-.0060																
.550																		

Note: The above tabulation is for that portion of the profile above the crest.

$\frac{Y}{H_s}$ \ $\frac{H_s}{R}$	$\frac{X}{H_s}$ 0.20	0.25	0.30	0.35	0.40	0.45	0.50	0.60	0.80	0.20	0.25	0.30	0.35	0.40	0.45	0.50	0.60	0.80
-0.000	0.519	0.488	0.455	0.422	0.384	0.349	0.310	0.238	0.144	0.454	0.422	0.392	0.358	0.325	0.288	0.253	0.189	0.116
-0.020	0.560	0.528	0.495	0.462	0.423	0.387	0.345	.272	.174	0.499	0.467	0.437	0.404	0.369	0.330	0.292	.228	.149
-0.040	0.598	0.566	0.532	0.498	0.458	0.420	0.376	.300	.198	0.540	0.509	0.478	0.444	0.407	0.368	0.328	.259	.174
-0.060	0.632	0.601	0.567	0.532	0.491	0.451	0.406	.324	.220	0.579	0.547	0.516	0.482	0.443	0.402	0.358	.286	.195
-0.080	0.664	0.634	0.600	0.564	0.522	0.480	0.432	.348	.238	0.615	0.583	0.550	0.516	0.476	0.434	0.386	.310	.213
-0.100	0.693	0.664	0.631	0.594	0.552	0.508	0.456	.368	.254	0.650	0.616	0.584	0.547	0.506	0.462	0.412	.331	.228
-0.150	0.760	0.734	0.701	0.661	0.618	0.569	0.510	.412	.290	0.726	0.691	0.660	0.620	0.577	0.526	0.468	.376	.263
-0.200	0.831	0.799	0.763	0.723	0.677	0.622	0.558	.451	.317	0.795	0.760	0.729	0.685	0.639	0.580	0.516	.413	.293
-0.250	0.893	0.860	0.826	0.781	0.729	0.667	0.599	.483	.341	0.862	0.827	0.790	0.743	0.692	0.627	0.557	.445	.319
-0.300	0.953	0.918	0.880	0.832	0.779	0.708	0.634	.510	.362	0.922	0.883	0.843	0.797	0.741	0.671	0.594	.474	.342
-0.400	1.060	1.024	0.981	0.932	0.867	0.780	0.692	.556	.396	1.029	0.988	0.947	0.893	0.828	0.749	0.656	.523	.381
-0.500	1.156	1.119	1.072	1.020	0.938	0.841	0.745	.595	.424	1.128	1.086	1.040	0.980	0.902	0.816	0.710	.567	.413
-0.600	1.242	1.203	1.153	1.098	1.000	0.891	0.780	.627	.446	1.220	1.177	1.129	1.061	0.967	0.869	0.753	.601	.439
-0.800	1.403	1.359	1.301	1.227	1.101	0.970	0.845	.672	.478	1.380	1.337	1.285	1.202	1.080	0.953	0.827	.655	.473
-1.000	1.549	1.498	1.430	1.333	1.180	1.028	0.892	.707	.504	1.525	1.481	1.420	1.317	1.164	1.014	0.878	.696	.498
-1.200	1.680	1.622	1.543	1.419	1.240	1.070	0.930	.733	.524	1.659	1.610	1.537	1.411	1.228	1.059	0.917	.725	.517
-1.400	1.800	1.739	1.647	1.489	1.287	1.106	0.959	.757	.540	1.780	1.731	1.639	1.480	1.276	1.096	0.949	.750	.531
-1.600	1.912	1.849	1.740	1.546	1.323	1.131	0.983	.778	.551	1.897	1.843	1.729	1.533	1.316	1.123	0.973	.770	.544
-1.800	2.018	1.951	1.821	1.590	1.353	1.155	1.005	.797	.560	2.003	1.947	1.809	1.580	1.347	1.147	0.997	.787	.553
-2.000	2.120	2.049	1.892	1.627	1.380	1.175	1.022	.810	.569	2.104	2.042	1.879	1.619	1.372	1.167	1.013	.801	.560
-2.500	2.351	2.261	2.027	1.697	1.428	1.218	1.059	.837		2.340	2.251	2.017	1.690	1.423	1.210	1.049	.827	
-3.000	2.557	2.423	2.113	1.747	1.464	1.247	1.081	.852		2.550	2.414	2.105	1.738	1.457	1.240	1.073	.840	
-3.500	2.748	2.536	2.167	1.778	1.489	1.263	1.099			2.740	2.530	2.153	1.768	1.475	1.252	1.088		
-4.000	2.911	2.617	2.200	1.796	1.499	1.274				2.904	2.609	2.180	1.780	1.487	1.263			
-4.500	3.052	2.677	2.217	1.805	1.507					3.048	2.671	2.198	1.790	1.491				
-5.000	3.173	2.731	2.223	1.810						3.169	2.727	2.207	1.793					
-5.500	3.290	2.773	2.228							3.286	2.769	2.210						
-6.000	3.400	2.808								3.396	2.800							

Note: The above tabulation is for that portion of the profile below the crest.

TABLE 3.—Coordinates of Lower Nappe Surface for Negligible Approach Velocity

	$\frac{Y}{H_s}$												
	10-percent vacuum*					20-percent vacuum*				30-percent vacuum*			
$\frac{X}{H_s}$ \ $\frac{H_s}{R}$	0.30	0.40	0.50	0.60	0.80	0.40	0.50	0.60	0.80	0.40	0.50	0.60	0.80
0.000	0.0000	0.0000	0.0000	0.0000	0.0000	0.0000	0.0000	0.0000	0.0000	0.0000	0.0000	0.0000	0.0000
.010	.0135	.0135	.0130	.0130	.0112	.0132	.0130	.0128	.0110	.0130	.0127	.0125	.0107
.020	.0235	.0230	.0225	.0215	.0180	.0227	.0220	.0210	.0175	.0225	.0215	.0205	.0170
.030	.0325	.0310	.0295	.0285	.0230	.0300	.0290	.0280	.0225	.0295	.0280	.0275	.0220
.040	.0395	.0375	.0350	.0330	.0265	.0370	.0340	.0325	.0260	.0365	.0335	.0320	.0250
.050	.0460	.0435	.0400	.0370	.0285	.0430	.0395	.0365	.0280	.0420	.0390	.0360	.0275
.060	.0515	.0480	.0450	.0405	.0295	.0475	.0440	.0400	.0290	.0465	.0435	.0395	.0285
.070	.0560	.0520	.0480	.0430	.0300	.0510	.0470	.0425	.0295	.0505	.0465	.0420	.0285
.080	.0600	.0565	.0520	.0450	.0295	.0555	.0505	.0445	.0290	.0540	.0495	.0440	.0280
.090	.0635	.0590	.0540	.0460	.0280	.0580	.0530	.0450	.0270	.0565	.0520	.0445	.0260
.100	.0665	.0620	.0560	.0470	.0260	.0605	.0540	.0460	.0250	.0585	.0530	.0460	.0240
.120	.0705	.0655	.0580	.0475	.0190	.0640	.0565	.0460	.0180	.0620	.0545	.0450	.0175
.140	.0730	.0680	.0580	.0450	.0105	.0650	.0565	.0435	.0095	.0630	.0545	.0420	.0090
.160	.0740	.0680	.0570	.0410	-.0010	.0660	.0550	.0395	-.0020	.0630	.0530	.0380	-.0030
.180	.0740	.0670	.0540	.0360		.0640	.0520	.0340		.0610	.0500	.0320	
.200	.0730	.0650	.0500	.0290		.0620	.0480	.0260		.0580	.0450	.0245	
.250	.0670	.0550	.0360	.0040		.0500	.0320	.0020		.0455	.0290	-.0010	
.300	.0560	.0390	.0145			.0330	.0100			.0265	.0070		
.350	.0400	.0200	-.0125			.0120	-.0180			.0030	-.0225		
.400	.0200	-.0040				-.0140				-.0240			
.450	-.0045												

Note: The above tabulation is for that portion of the profile above the weir crest.

	$\frac{X}{H_s}$												
$\frac{Y}{H_s}$ \ $\frac{H_s}{R}$	0.30	0.40	0.50	0.60	0.80	0.40	0.50	0.60	0.80	0.40	0.50	0.60	0.80
0.000	0.442	0.393	0.328	0.257	0.158	0.374	0.319	0.253	0.157	0.356	0.313	0.248	0.155
-0.020	0.478	0.431	0.362	.288	.187	0.411	0.353	.284	.185	0.392	0.346	.279	.183
-0.040	0.512	0.465	0.392	.314	.210	0.444	0.383	.310	.208	0.425	0.375	.305	.205
-0.060	0.452	0.496	0.418	.338	.229	0.475	0.410	.333	.227	0.454	0.402	.328	.224
-0.080	0.572	0.525	0.444	.358	.247	0.504	0.434	.354	.244	0.482	0.426	.348	.240
-0.100	0.600	0.552	0.467	.377	.262	0.531	0.458	.372	.259	0.509	0.449	.367	.255
-0.150	0.663	0.613	0.519	.418	.295	0.592	0.508	.414	.291	0.567	0.498	.409	.287
-0.200	0.720	0.669	0.563	.454	.321	0.645	0.552	.449	.316	0.618	0.540	.443	.312
-0.250	0.773	0.718	0.601	.484	.343	0.692	0.589	.479	.339	0.664	0.577	.472	.333
-0.300	0.823	0.764	0.634	.511	.363	0.734	0.622	.506	.358	0.705	0.609	.498	.351
-0.400	0.913	0.843	0.690	.556	.395	0.813	0.678	.550	.389	0.779	0.664	.542	.381
-0.500	0.996	0.913	0.737	.593	.422	0.879	0.723	.587	.414	0.844	0.709	.578	.407
-0.600	1.068	0.973	0.779	.623	.442	0.938	0.763	.617	.435	0.900	0.749	.609	.427
-0.800	1.193	1.070	0.843	.670	.476	1.032	0.826	.663	.469	0.993	0.810	.656	.459
-1.000	1.303	1.144	0.889	.705	.501	1.108	0.873	.696	.493	1.071	0.860	.690	.483
-1.200	1.401	1.203	0.927	.732	.518	1.170	0.912	.723	.510	1.137	0.900	.716	.501
-1.400	1.492	1.253	0.955	.755	.533	1.223	0.943	.746	.525	1.193	0.931	.739	.516
-1.600	1.574	1.297	0.980	.773	.545	1.268	0.970	.765	.535	1.243	0.958	.757	.528
-1.800	1.649	1.331	1.000	.790	.555	1.307	0.991	.780	.546	1.287	0.980	.773	.538
-2.000	1.717	1.361	1.018	.803	.564	1.340	1.010	.795	.555	1.321	1.000	.785	.546
-2.500	1.865	1.420	1.053	.828	.579	1.408	1.046	.819	.571	1.389	1.039	.810	.564
-3.000	1.988	1.457	1.078	.848		1.450	1.070	.838		1.435	1.062	.830	
-3.500	2.088	1.482	1.093			1.473	1.083			1.467	1.077		
-4.000	2.158	1.498				1.490				1.483			
-4.500	2.205	1.508				1.500				1.492			
-5.000	2.228												
-5.500	2.230												
-6.000	2.231												

Note: The above tabulation is for that portion of the profile below the weir crest.

crest. To facilitate the interchange between H_s and H_o, the relationship of H_s/R to E/H_s for the three approach depths and the three vacuum crests is plotted in Figs. 13(a) and (13(b). The values of E/H_s which are equal to Y/H_s at the high point of the lower-nappe profile were obtained from Tables 1,

2, and 3. Because H_s is equal to H_o plus E (Fig. 1), the curves offer a method of determining H_o when H_s is known, or vice versa.

As the discharge equation for the circular weir, Eq. 1, involves three variables (C, L, or radius, and H_s), the procedure for determining the size of the overflow section for a morning-glory spillway by successive approximations is a long and tedious process. By expressing the discharge in terms of the dimen-

TABLE 4.—COORDINATES OF UPPER-NAPPE SURFACE FOR NEGLIGIBLE VELOCITY OF APPROACH AND AERATED NAPPE

	$\frac{Y}{H_s}$										
$\frac{X}{H_s}$ \ $\frac{H_s}{R}$	0.20	0.25	0.30	0.35	0.40	0.45	0.50	0.60	0.80	1.00	
-0.40	0.955	0.956	0.959	0.960	0.961	0.963	0.968	0.976	0.986	1.000	Level water surface for $\frac{H_s}{R} > 1.00$
-0.20	0.925	0.927	0.929	.930	.935	.936	.942	.958	.973	0.996	
0.00	0.880	0.886	0.892	.895	.900	.905	.920	.932	.955		
0.20	0.820	0.829	0.838	.845	.851	.861	.870	.900			
0.40	0.740	0.753	0.763	.772	.787	.801	.815	.855			
0.60	0.640	0.658	0.669	.684	.702	.726	.748				
0.80	0.518	0.540	0.556	.578	.600	.633					
1.00	0.372	0.402	0.420	.449	.475						
1.20	0.205	0.240	0.265	.300	.328						
1.40	0.013	0.051	0.081	.128							
1.60	-0.205	-0.160	-0.122	-.063							
1.80	-0.457	-0.400	-0.357								
2.00	-0.748	-0.678	-0.613								
2.20	-1.072	-0.981	-0.895								
2.40	-1.440	-1.315	-1.198								
2.60	-1.845	-1.670									
2.80	-2.268										
3.00	-2.685										
Point at which upper nappe surface joins boil											
X/H_s			2.410	1.711	1.208	0.810	0.725	0.510	0.120	-0.068	
Y/H_s			-1.210	-0.185	0.320	0.626	0.696	0.825	0.940	0.990	
High point of boil											
X/H_s				2.911	2.545	2.267	2.043	1.710	1.275	1.030	
Y/H_s				0.006	0.438	0.666	0.783	0.942	0.970	1.000	

sionless ratio H_s/R, the number of variables is reduced to two and work is minimized. From Eq. 1,

$$Q = C\,(2\,\pi\,R)\,H^{3/2}{}_s = \frac{C\,2\,\pi}{\frac{H_s}{R}}\,H^{5/2}{}_s \qquad (3)$$

Then,

$$\frac{H_s}{R} = 2\,\pi\left(C\,\frac{H^{5/2}{}_s}{Q}\right) \qquad (4)$$

Values of $C\,H^{5/2}{}_s/Q$ for different (H_s/R)-ratios are plotted also in Figs. 13(a) and 13(b). When used in conjunction with the ratio E/H_s, the number of successive approximations required to determine C, R, or H_s is materially reduced.

TABLE 5.—Coordinates of Upper-Nappe Surface for Aerated Nappe

	$\frac{Y}{H_s}$																	
	$\frac{P}{R} = 0.30$									$\frac{P}{R} = 0.15$								
$\frac{X}{H_s}$ \ $\frac{H_s}{R}$	0.20	0.25	0.30	0.35	0.40	0.45	0.50	0.60	0.80	0.20	0.25	0.30	0.35	0.40	0.45	0.50	0.60	0.80
-0.40	0.964	0.965	0.968	0.975	0.976	0.977	0.978	0.986	0.991	0.957	0.962	0.968	0.971	0.978	0.980	0.987	0.990	0.995
-0.20	0.929	0.934	0.936	.947	.949	.950	.954	.966	.981	0.917	0.924	.934	.942	.949	.955	.960	.970	.985
0.00	0.879	0.885	0.890	.901	.907	.911	.919	.938	.966	0.870	0.875	.887	.899	.909	.915	.922	.937	.970
0.20	0.813	0.818	0.829	.843	.853	.862	.871	.892	.944	0.800	0.810	.823	.836	.850	.860	.871	.894	.948
0.40	0.730	0.737	0.753	.772	.788	.798	.810	.836		0.715	0.727	.745	.759	.776	.792	.807	.841	
0.60	0.626	0.641	0.658	.683	.700	.715	.730			0.610	0.629	.648	.666	.686	.708	.735		
0.80	0.506	0.524	0.544	.574	.592	.611				0.490	0.511	.533	.556	.582	.612			
1.00	0.363	0.388	0.413	.442	.465					0.352	0.377	.398	.427	.465				
1.20	0.199	0.228	0.253	.292						0.187	0.216	.240	.277	.337				
1.40	0.005	0.042	0.071	.123						-0.007	0.028	.055	.106					
1.60	-0.223	-0.175	-0.135	-.070						-0.235	-0.190	-.155	-.081					
1.80	-0.482	-0.422	-0.368							-0.498	-0.437	-.388						
2.00	-0.772	-0.702	-0.625							-0.795	-0.710	-.648						
2.20	-1.083	-1.018	-0.910							-1.118	-1.023	-.903						
2.40	-1.415	-1.347	-1.235							-1.448	-1.350							
2.60	-1.767	-1.683								-1.800	-1.683							
2.80	-2.130	-2.018								-2.148	-2.035							
3.00	-2.500	-2.351								-2.522	-2.388							
Point at which upper nappe surface joins boil																		
X/H_s			2.410	1.733	1.096	0.938	0.714	0.420	0.315			2.222	1.723	1.260	0.948	0.732	0.420	0.344
Y/H_s			-1.253	-0.210	0.394	0.531	0.680	0.830	0.926			-0.932	-0.200	0.295	0.530	0.681	0.835	0.925
High point of boil																		
X/H_s			3.370	2.922	2.436	2.288		1.775	1.252				2.935	2.531	2.278	2.009	1.680	1.263
Y/H_s			-0.755	0.043	0.496	0.713		0.950	0.985				0.002	0.458	0.647	0.815	0.935	0.998

TABLE 6.—Coordinates of Upper-Nappe Surface for Negligible Velocity of Approach

	$\frac{Y}{H_s}$												
	10-percent vacuum*					20-percent vacuum*				30-percent vacuum*			
$\frac{X}{H_s}$ \ $\frac{H_s}{R}$	0.30	0.40	0.50	0.60	0.80	0.40	0.50	0.60	0.80	0.40	0.50	0.60	0.80
-0.40	0.940	0.951	0.956	0.963	0.981	0.941	0.950	0.958	0.978	0.939	0.945	0.957	0.975
-0.20	.911	.927	.938	.940	.971	.911	.925	.931	.966	.908	.912	.929	.964
0.00	.865	.883	.897	.909	.960	.865	.886	.898	.957	.865	.870	.890	.952
0.20	.803	.825	.848	.873	.950	.808	.835	.860	.941	.803	.815	.843	
0.40	.725	.753	.783	.825		.735	.770	.808		.723	.742	.789	
0.60	.628	.662	.711			.641	.697			.622	.650	.724	
0.80	.508	.551				.522				.491			
1.00	.358	.413				.368				.325			
1.20	.170	.242				.173				.105			
1.40	-.062	-.053				-.070				-.163			
1.60	-.327					-.345				-.460			
1.80	-.629					-.638				-.783			
2.00	-.975												
2.20	-1.374												
2.40	-1.819												
2.60	-2.300												
Point at which upper nappe surface joins boil													
X/H_s	2.600	1.504	.721	.403	.300	1.808	.722	.418	.299	1.803	.735	.608	.152
Y/H_s	-2.300	-.043	.665	.821	.944	-.644	.647	.803	.931	-.790	.620	.722	.940

Application of Results

To illustrate the practical use of these experimental results in determining the profile of a morning-glory spillway, a comparison with the model studies for Hungry Horse Dam spillway will be made. Although the crest profile for Hungry Horse Dam spillway was determined from specific tests on the circular test weir, none of the Hungry Horse data was used in these experiments.

The first step in the computations is to determine the radius of the spring point, R, required to pass 53,000 cu ft per sec when the head, H_o, above the high point of the crest is 16.9 ft. Because the experimental data are in terms of head above the weir, H_s, it is necessary to assume a value of H_s as well as a coefficient, C. Assuming $H_s = 18.5$ ft and $C = 3.0$,

$$\frac{C\,H^{5/2}{}_s}{Q} = \frac{3.0(18.5)^{5/2}}{53{,}000} = 0.083.$$

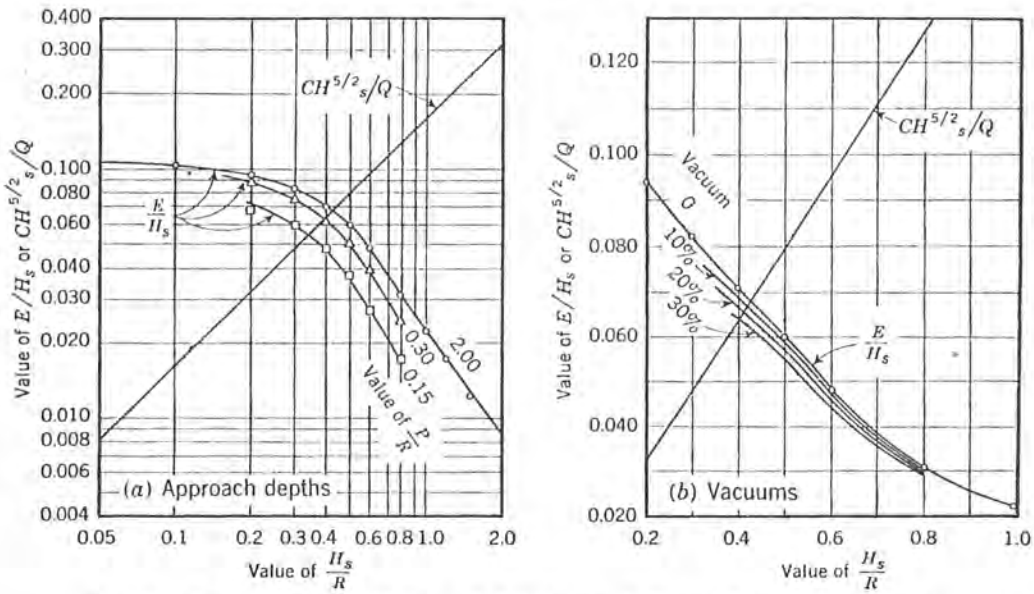

Fig. 13.—Relationship of H_s/R to $C\,H^{5/2}{}_s/Q$ and E/H_s for Different Approach Depths and Pressures Under the Nappe

Entering this value into Fig. 13, $H_s/R = 0.52$ and $E/H_s = 0.053$ for a 30% vacuum crest. Then

$$E = 0.053(18.5) = 0.98 \text{ ft}$$

and

$$H_s = 16.9 + 0.98 = 17.88 \text{ ft.}$$

From Fig. 10, $C = 3.39$, which does not check the assumed value.

Using the new values of C and H_s, the process is repeated—

$$\frac{C\,H^{5/2}{}_s}{Q} = \frac{3.39(17.9)^{5/2}}{53{,}000} = 0.086.$$

From Fig. 13, $H_s/R = 0.53$ and $E/H_s = 0.052$. Therefore, $E = 0.93$ and $H_s = 17.83$ ft. From Fig. 10, $C = 3.38$, which checks sufficiently well with

the trial values. Therefore,

$$R = \frac{17.83}{0.53} = 33.6 \text{ ft.}$$

The radius, R, and the head, H_s, above the weir have been established.

With the ratio, $H_s/R = 0.53$, it is possible to determine the shape of the overflow section. The (X/H_s)- and (Y/H_s)-coordinates for a 30% vacuum crest are given in Table 3 for (H_s/R)-values of 0.50 and 0.60. By interpolation, sufficient coordinates to describe the curve for $H_s/R = 0.53$ are obtained.

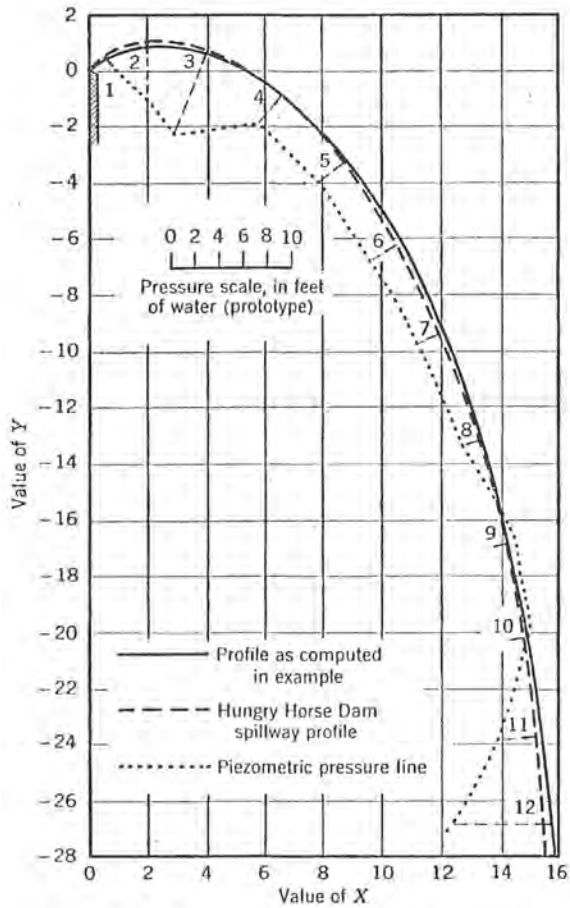

FIG. 14.—COMPARISON OF SPILLWAY PROFILES

TABLE 7.—COORDINATES FOR FIG. 14

$\frac{X}{H_s}$	$\frac{Y}{H_s}$	X	Y
0.050	0.038	0.89	0.68
0.070	0.045	1.25	0.80
0.100	0.051	1.78	0.91
0.200	0.039	3.56	0.70
0.293	0	5.22	0
0.424	−0.10	7.55	−1.70
0.545	−0.25	9.71	−4.45
0.627	−0.40	11.18	−7.12
0.707	−0.60	12.60	−10.69
0.764	−0.80	13.60	−14.25
0.809	−1.00	14.40	−17.81
0.845	−1.20	15.03	−21.39
0.873	−1.40	15.54	−24.95
0.898	−1.60	16.00	−28.50

These (X/H_s)- and (Y/H_s)-coordinates and the corresponding X-values and Y-values are presented in Table 7. The overflow section of the spillway can now be plotted as shown in Fig. 14.

Table 8 shows a comparison of the foregoing computations with those in the model studies of the Hungry Horse Dam spillway.

Col. 2, Table 8, shows the significant data from these experiments that were used in computing the example, and Col. 3 contains similar data used in the design of the Hungry Horse Dam spillway. It is noted that the experimental data show slightly lower values of H_s, E, and R than those used in the Hungry Horse design, which accounts for the higher coefficient of discharge, C, obtained with the experimental data.

Because the model was constructed using the spillway dimensions listed in Col. 3, the values of H_s, H_o, E, and R are identical in Cols. 3 and 4. The discharge obtained in the model is approximately 7% less than the design flow. This discrepancy can be explained as follows: (1) The spillway is designed with

a 9-ft-wide pier placed over the rounded crest. In computing the discharge in Cols. 2 and 3, the reduced effective length of the crest (because of the pier) was not considered, which accounts for approximately half the 7% discrepancy. (2) The experimental data are based on the ideal situation where all the flow enters the spillway on radial lines. For the Hungry Horse Dam spillway approximately half the crest is located in an approach channel cut in the hillside, and only 50% to 60% of the flow approaches the crest on radial lines.

Whether the reduction in discharge caused by the nonradial approach conditions is greater or less than that indicated by the difference in the computed and model discharges cannot be determined from the available data.

A comparison of the two rounded crests is shown in Fig. 14 where the profile, as determined from these experiments, is plotted as a solid line and the Hungry Horse crest is denoted by a broken line. Also shown are the piezometric pressures in feet of water (prototype) observed on the model for a discharge corresponding to a prototype flow of 50,000 cu ft per sec. Pressures above atmospheric are indicated above and to the right of the profile, and subatmospheric pressures are shown below and to the left of the profile.

TABLE 8.—COMPARISON OF COMPUTATIONS AND MODEL STUDIES

Item (1)	Experimental data (2)	Hungry Horse Dam spillway, as designed (3)	Hungry Horse Dam spillway model results (4)
H_s, in feet	17.83	17.9	17.9
H_o, in feet	16.90	16.9	16.90
E, in feet	0.93	1.00	1.00
R, in feet	33.6	34.0	34.0
Q, in cubic feet per second	53,000	53,000	49,000
C	3.38	3.28	3.06
Vacuum crest, in feet	−5.3	−5.0	0.8 to −8.0
Crest shape	See Fig. 14	See Fig. 14	

The greatest deviation in the two profiles occurs in the region between piezometers 4 and 7 and at the lower end of the rounded crest between piezometers 11 and 12. The observed pressures on the model crest suggest the true shape of the overflow section for the design conditions by indicating where the curvature of the model crest profile should be adjusted to obtain a uniform pressure of approximately −5 ft of water along the spillway face. Lower pressures usually occur where the degree of curvature is too great.

To verify the magnitude and uniformity of the pressures on the computed profile would require tests on a model representing that particular crest shape. However, the observed pressures on the Hungry Horse model tend to confirm the fact that the observed and computed pressures should agree.

LIMITATIONS ON APPLICATION OF RESULTS

Certain limitations should be recognized when applying the experimental results to determine the coefficient of discharge and profile of a morning-glory spillway. The test data were obtained from a circular weir in which the water fell freely through the atmosphere or a partial vacuum. Thus, the upper-nappe

surface was subject to atmospheric pressure in all tests, whereas the lower-nappe surface was subject to either atmospheric pressure or a partial vacuum depending on the test arrangement. Therefore, the head producing the discharge was the head above the weir plus the pressure under the nappe measured in feet of water below atmospheric pressure.

In the morning-glory spillway, the same conditions exist except that the space under the nappe is replaced by concrete. However, when a morning-glory spillway is designed for the submerged condition or with the top of the boil near the crest of the spillway, an additional head is acting on the spillway because of the siphonic action of the column of water in the shaft. This additional head, which does not exist in the circular weir because the jet is surrounded by air, causes a pressure reduction in the shaft and an increase in discharge over the spillway. Therefore, when a morning-glory spillway is designed for near-submerged conditions, similitude between the spillway and the circular weir no longer exists. If the shaft is designed to flow partly full, however, flows in a morning-glory spillway and a circular weir are similar.

In applying the experimental results from the circular weir to a morning-glory spillway, some method of maintaining the design pressure along the lower-nappe surface should be provided to restore similitude between the two flows. The design pressure may be maintained by several methods: (*a*) Design the spillway with a small (H_s/R)-ratio so that the shaft never flows full. (*b*) Place a constriction in the shaft at any point below the boil to maintain the design pressure under the nappe at the boil. (*c*) Provide air vents under the nappe at the boil to relieve the suction head caused by the shaft flowing full.

At the Hungry Horse Dam air was supplied to the lower-nappe surface by several air vents placed under the lip of the ring gate. In addition, a 6-ft by 6-ft air vent was placed in the crown of the vertical bend connecting the shaft with the inclined tunnel. Model tests on the Hungry Horse Dam spillway showed that pressures lower than those indicated in Fig. 14 were observed when the air vents were closed.

Additional research is required for the economical design of a submerged morning-glory spillway with a pressure-controlled profile. However, if the previously cited limitations are recognized and means are provided to deal with them, the results should prove helpful in designing a morning-glory spillway.

Acknowledgments

The test weir was constructed and the tests performed in the hydraulic laboratory of the USBR in Denver. Many members of the laboratory staff made valuable contributions to the paper. Credit is due J. N. Bradley, M. ASCE, D. J. Hebert, and A. J. Peterka, M. ASCE, for their suggestions in formulating the testing program and in evaluating the experimental results.

It is also desired to acknowledge the assistance of T. J. Rhone, A.M. ASCE, G. L. Beichley, A. S. Reinhart, P. F. Enger, J.M. ASCE, J. V. Williamson, N. E. Smith, J.M. ASCE, R. E. Selleck, J.M. ASCE, and L. A. Browning, who assisted in preparing the equipment plans, collecting the test data, and tabulating the results.

DISCUSSION

MAXWELL W. WHITE[8] AND MURRAY B. MCPHERSON,[9] A.M. ASCE.—The characteristics of morning-glory shaft spillways in important structures are determined by a model test of the actual structure, by an application of principles arrived at by studies on model spillways, or by more fundamental studies on sharp-crested circular weirs. The "scaling up" of results from these model tests to prototype conditions requires that the scale effects (that is, the factors affecting flow over the model weir which are not present in the prototype) either be negligible or else be accounted for in the computation.

The results given for discharge coefficients by Mr. Wagner concern spillways designed for maximum heads from H_s/D (in which $D = 2\,R$) greater than 0.10 to past the submerged range. However, not many spillways have been designed to perform submerged. Of the eighteen morning-glory spillways for which details have been published[10] only four are designed to perform submerged, six for ratios of H_s/D between 0.10 and 0.20, and eight for ratios of H_s/D less than 0.10.

Tests were performed on sharp-edged circular weirs in the hydraulic laboratory of the Fritz Engineering Laboratory of Lehigh University (Bethlehem, Pa.) between 1949 and 1954.[11] These tests were intended to determine (*a*) the head-discharge relationship—that is, the relationship between the basic parameters, Q, H, and D, (*b*) the effect on this relationship of fluid properties such as surface tension and viscosity, particularly at small heads, and (*c*) the point at which weir flow changes to flow through a re-entrant tube. These results were compared with those of other investigators to extend the range and value of the results. A brief survey of the investigations and of the results obtained is presented herein. These results were not extended to pressure-controlled lower nappes as mentioned by Mr. Wagner, all tests being conducted with the lower nappe aerated at atmospheric pressure and with the nappe springing clear from the crest. The approach conditions were fixed for uniform radial flow.

From preliminary tests it was found, in agreement with Mr. Wagner, that when P was greater than D the effects of the velocity head and the ratio H_s/P on the discharge coefficient were negligible. Accordingly, this factor was eliminated from subsequent testing, P in all cases being greater than D.

With these variables eliminated, the remaining factors can be grouped into dimensionless parameters—

$$\frac{Q}{H^{1.50}_s\, D^{1.00}\, g^{0.50}} = \frac{C\,\pi}{g^{0.50}} \qquad (5)$$

$$\frac{H_s}{D} \qquad (6)$$

[8] Research Assistant, Lehigh Univ., Bethlehem, Pa.

[9] Associate Prof. of Civ. Eng., Lehigh Univ., Bethlehem, Pa.

[10] "Morning-Glory Shaft Spillways: Prototype Behavior," by Joseph N. Bradley, *Transactions*, ASCE, Vol. 121, 1956, p. 312.

[11] "Characteristics of Sharp-Crested Circular Weirs," by M. W. White, G. M. Brey, and R. G. Dittig, *Report No. A-1342*, Fritz Eng. Lab., Lehigh Univ., Bethlehem, Pa., April, 1954.

and

$$\frac{H^{1.50}{}_s\, g^{0.50}}{\nu} = \mathsf{R} \qquad (7)$$

in which **R** is a Reynolds number, and

$$\frac{\gamma\, H^{2.00}{}_s}{\sigma} = \mathsf{W} \qquad (8)$$

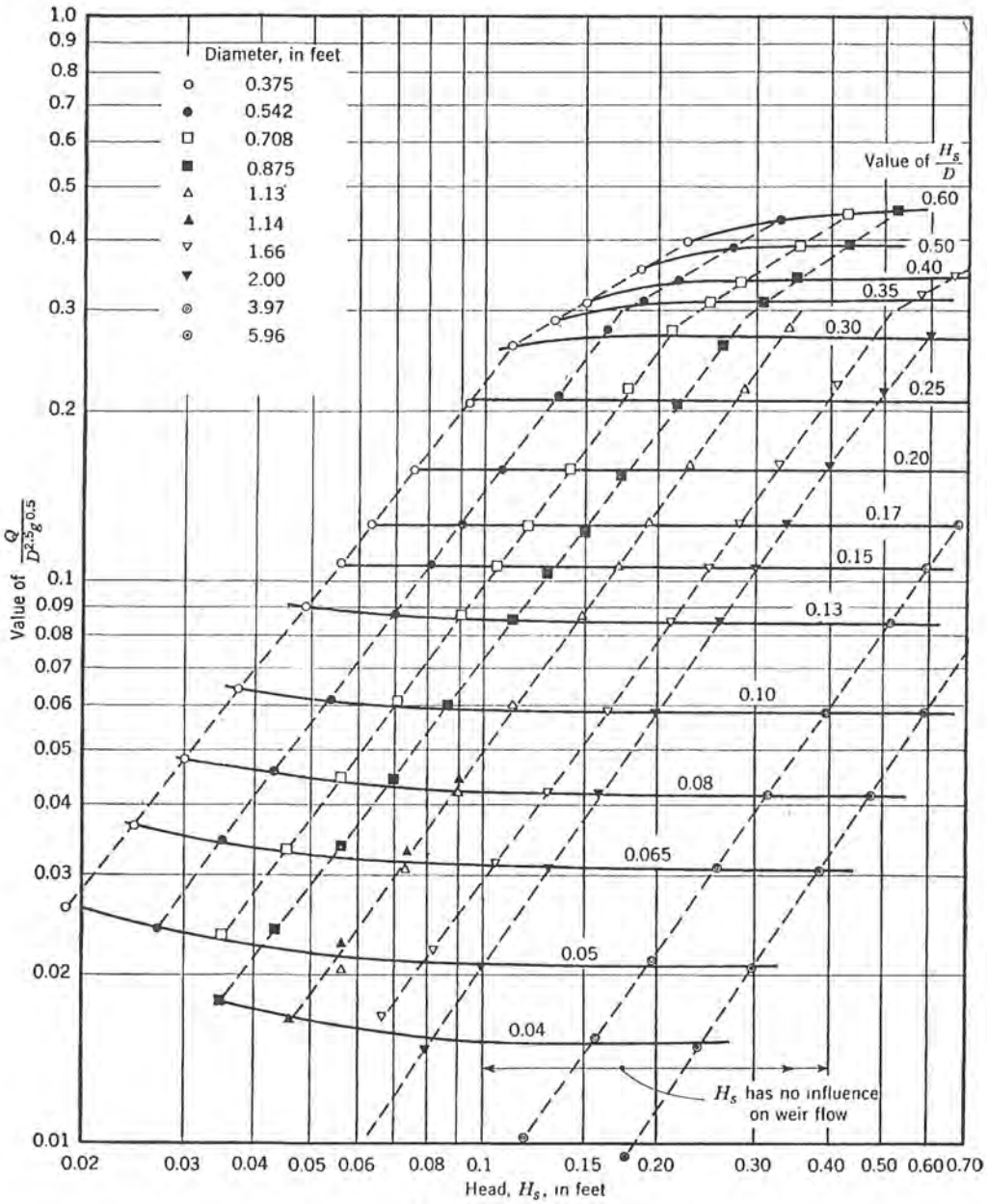

FIG. 15.—THE RELATIONSHIP BETWEEN $Q/(D^{2.5}\, g^{0.5})$ AND H_s FOR CONSTANT VALUES OF H_s/D

in which **W** is a Weber number and from which

$$\frac{Q}{H^{1.50}_s D^{1.00} g^{0.50}} = f\left(\frac{H_s}{D}, \frac{H^{1.50}_s g^{0.50}}{\nu}, \frac{\gamma H^{2.00}_s}{\sigma}\right) \quad \ldots\ldots\ldots\ldots (9)$$

The parameter in Eq. 5 is a theoretical coefficient of discharge. Dimensional analysis shows that this coefficient is a function of (1) H_s/D, which expresses the contractive effect; (2) **R**, which expresses the effects of viscosity; and (3) **W**, which expresses the effects of surface tension.

In the tests at Lehigh University only water was used; therefore, the parameters **R** and **W** could not be varied independently because both are functions of fluid properties and head, H_s, only. The effects of the two factors could therefore not be presented generally for any fluid, nor could their individual effects be distinguished. For this reason the results presented herein apply

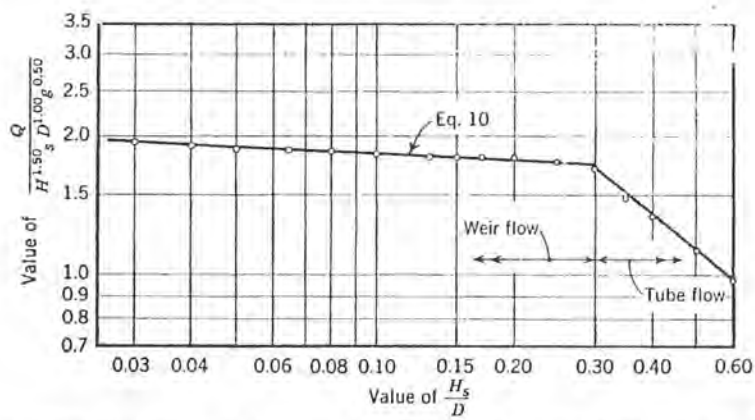

FIG. 16.—THE RELATIONSHIP BETWEEN $Q/(H^{1.50}_s D^{1.00} g^{0.50})$ AND H_s/D FOR THE REGION WHERE H_s HAS NO INFLUENCE

only to water, and in the investigations the parameters **W** and **R** can be represented as a function of H_s only, for water.

Within these limitations, the investigation was concerned with the effect on the coefficient of discharge of the head H_s and the effect of the ratio H_s/D.

The diameters used at Lehigh University were 0.375 ft, 0.542 ft, 0.708 ft, and 0.875 ft. Results of studies[2,3,4] were also used for weirs with diameters of 1.13 ft, 1.14 ft, 1.66 ft, 2.0 ft, 3.97 ft, and 5.96 ft. A summary of all the data is available.[11]

From all available experimental data, Fig. 15 was plotted. Fig. 15 shows the variation of $Q/(H^{1.5}_s D^{1.0} g^{0.5})$ with the head H_s for various constant values of H_s/D. For clarity, the ordinate has been plotted as $Q/(D^{2.5} g^{0.5})$ which—because curves are plotted for constant values of H_s/D—has only the effect of separating the curves.

Fig. 15 indicates that, when H_s is greater than approximately 0.10 ft, the value of $Q/(H^{1.5}_s D^{1.0} g^{0.5})$ remains constant for each value of H_s/D up to

$H_s/D \simeq 0.30$. That is, the relationship is independent of H_s for heads greater than 0.10 ft (corresponding to **R** = 16,600 and **W** = 125).

These values are more definite limits than Mr. Wagner has given for the minimum size of the weir that will eliminate scale effects. The inconsistencies in the discharge coefficient for low heads (mentioned by Mr. Wagner under the heading, "Analysis of Results: Discharge Coefficients") were not found in the Lehigh tests, probably because of the shorter time required to establish steady conditions. The tendency of the discharge coefficient to "increase as head decreased" was caused by surface tension or viscosity. The separate effects of surface tension and viscosity can be determined only by tests with various fluids flowing over the weir. Until such tests are completed these findings are applicable only to water.

Fig. 16 shows the relationship between $Q/(H^{1.5}_s D^{1.0} g^{0.5})$ and H_s/D for the range in which the former is independent of H_s. On a log-log graph, this relationship plots as a straight line in the range of H_s/D equal to from 0.03 to 0.30. The relationship is

$$\frac{Q}{H^{1.50}_s D^{1.00} g^{0.50}} = 1.66 \left(\frac{H_s}{D}\right)^{-0.04} \quad \ldots\ldots\ldots\ldots\ldots\ldots (10)$$

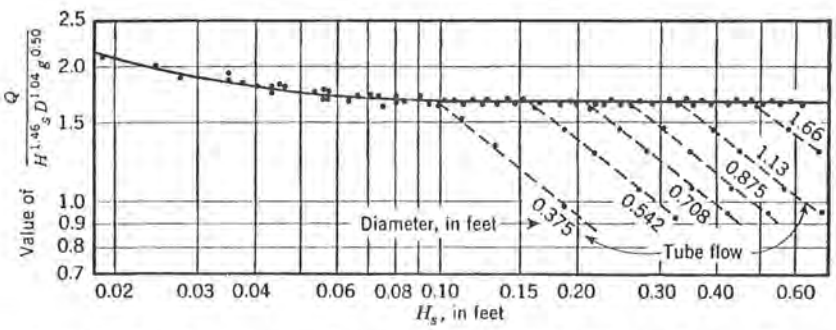

FIG. 17.—THE RELATIONSHIP BETWEEN $Q/(H^{1.46}_s D^{1.04} g^{0.50})$ AND H_s FOR WATER

or

$$Q = 1.66 \left(\frac{H_s}{D}\right)^{-0.04} \sqrt{g}\, D\, H^{1.50}_s \quad \ldots\ldots\ldots\ldots\ldots\ldots (11)$$

That is,

$$C = \frac{1.66}{\pi} \left(\frac{H_s}{D}\right)^{-0.04} \sqrt{g} \quad \ldots\ldots\ldots\ldots\ldots\ldots (12)$$

Eq. 12 is in very close agreement with the values given by Mr. Wagner (Fig. 9) for the more limited range of his tests. Eq. 12 can also be written as

$$Q = 1.66 \sqrt{g}\, D^{1.04} H^{1.46}_s \quad \ldots\ldots\ldots\ldots\ldots\ldots (13)$$

In Fig. 17, the parameter $Q/(H^{1.46}_s D^{1.04} g^{0.5})$ is plotted against the depth H_s. After H_s exceeds approximately 0.10 ft, the value of the parameter is

constant at 1.66. For heads less than 0.10 ft, the available results for all the weirs with heads as low as 0.02 ft fall on a smooth curve. In addition to indicating that the effects of surface tension or viscosity are correctly represented by Reynolds and Weber numbers involving the head only, Fig. 17 also shows the value of the discharge coefficient for any head below 0.10 ft when water is the fluid medium.

The point at which weir flow is "flooded out," the regime changing to flow through a re-entrant tube, was found in the Lehigh experiments to occur when H_s/D was approximately equal to 0.30 (the upper limit) above which weir flow cannot exist. However, if a vortex is formed, the flow diverges from weir flow at an earlier point. This is probably why Mr. Wagner and earlier investigators found the limit for free discharge to be lower than 0.30. The effect of vortex formation is to reduce the discharge for a given head,[12] as shown in Fig. 18 which is a discharge-head curve for an arbitrary 1-ft-diameter

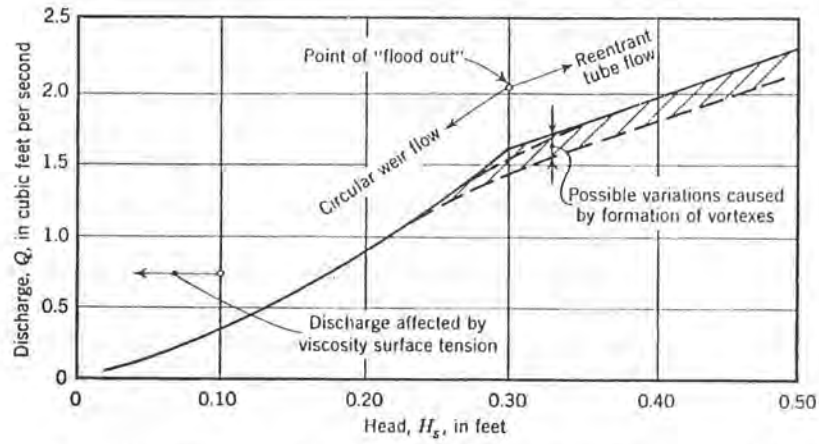

FIG. 18.—HEAD-DISCHARGE RELATIONSHIP FOR FLOW OVER A CIRCULAR WEIR HAVING A DIAMETER OF 1 FT

circular weir. If the vortex is eventually destroyed by the establishment of tube flow, the vortex causes a gradual transition between the two types of flow. When a vortex is suppressed by simple radial baffles, weir flow continues to the upper limit of $H_s/D \simeq 0.30$; most morning-glory spillways have radial baffles to prevent the formation of vortices.[10] No quantitative results have been obtained for the effect of a vortex in terms of the vortex strength.

The conclusions from the Lehigh tests can be summarized as follows: For the flow of water over a sharp-edged circular weir with the following limitations —(*a*) radial approach conditions (no vortex), (*b*) P greater than weir diameter, and (*c*) aerated flow (that is, the lower nappe being at atmospheric pressure)— the relationship between the discharge, head over weir, and weir diameter (up

[12] "How the Vortex Affects Orifice Discharge," by C. J. Posey and H. Hsu, *Engineering News-Record*, March 9, 1950, p. 30.

to the point of "flood-out") can be expressed as

$$Q = K \left(\frac{H_s}{D}\right)^{-0.04} \sqrt{g}\, D\, H^{1.50}_s \qquad (14)$$

or

$$Q = K \sqrt{g}\, D^{1.04}\, H^{1.46}_s \qquad (15)$$

The value of K is a function of the head over the weir H_s. If H_s exceeds 0.10 ft, K is constant and equals 1.66. If H_s is less than 0.10 ft, the value of K may be obtained from Fig. 17 for heads as low as 0.02 ft.

The upper limit at which weir flow changes in character to flow through a re-entrant tube is given by $H_s/D = 0.30$; the formation of a vortex causes the flow to deviate from true weir flow at a lower value of this ratio.

Fred W. Blaisdell,[13] M. ASCE.—A most interesting presentation of experimental results of a determination of pressure-controlled profiles has been made by Mr. Wagner. A valuable by-product of this investigation is the data obtained on the discharge coefficient.

A great many spillways, especially the smaller ones, do not have shaped crests; many of them are formed of pipe, and their entrances take the shape of the pipe end. The crest shape for metal pipe is nearly that of the sharp-edged weir used by Mr. Wagner. Therefore, his results can be applied directly to the design of these spillways. This type of structure has been discussed by L. Standish Hall.[14]

Under the heading, "Interpretation of Results: Discharge Coefficient," Mr. Wagner states that " . . . most morning-glory spillways are designed for free flow." The data presented by Mr. Bradley[10] show that the Hungry Horse, Gibson, and Owyhee dams have values of H_s/R varying from a little above to a little below 0.45 whereas the Shade Hill, Heart Butte, and Kingsley dams have values of H_s/R greater than 1. Mr. Wagner (under the heading, "Analysis of Results") states that free flow exists for values of H_s/R less than 0.45 and submerged flow exists for values of H_s/R greater than 1.00. Therefore, it appears that a sufficient number of dams operate in the submerged-flow range (three of four dams completed in the United States since 1940) to make this statement open to question.

Because

$$C_o = \frac{2}{\sqrt{2}\, g} \frac{H_s}{R} C \qquad (16)$$

and as Mr. Wagner already has values of H_s/R and C, the determination of the values of C_o should be relatively easy. Such a determination would be a valuable addition to the paper, would permit the use of the coefficients in the

[13] Project Supervisor, Agri. Research Service, U. S. Dept. of Agriculture, St. Anthony Falls Hydr. Lab., Minneapolis, Minn.

[14] "Drop Structures for Erosion Control," by L. Standish Hall, *Civil Engineering*, Vol. 12, 1942, pp. 247-250.

orifice equation (which is theoretically correct for values of H_s/R exceeding 1.00), and would permit extrapolating beyond the range covered by Mr. Wagner's tests.

It is unfortunate that no data were obtained for a zero depth of approach ($P/R = 0$). This depth exists in many smaller structures in which the vertical shaft or drop inlet is formed of pipe and the approach is level with the crest.

Tables 4 and 5 provide interesting verification of Mr. Wagner's statement, apparently derived from a study of Figs. 8 and 9, that the weir becomes partly submerged at values of H_s/R above 0.45. It is usually considered that the tailwater level will not affect the head on a weir unless the tailwater reaches a level above the weir crest exceeding the critical depth of flow d_c. Because $d_c = \frac{2}{3} H_s$, the value of Y/H_s is 0.667 when Y is equal to the critical depth. Tables 4 and 5 show that the value of H_s/R for $Y/H_s = 0.667$ at the point where the upper-nappe surface joins the boil is between 0.45 and 0.50. The value of H_s/R can be determined more precisely by plotting values of Y/H_s against H_s/R, which shows that $H_s/R = 0.47$ for $P/R = 2.00$, and 0.49 for $P/R = 0.30$ and 0.15 when $Y/H_s = 0.667$. These values closely confirm Mr. Wagner's value of 0.45.

For the free-flow part of the base curve in Fig. 9, a variable discharge coefficient is shown. It has been stated [2] that C is a constant equal to 3.28 (within 1%) for values of H_s/R between 0.16 and 0.40. Unfortunately, Mr. Camp and Mr. Howe do not give values of C_o so these comparisons are not possible.

Ibrahim M. Mostafa,[15] J.M. ASCE, Benoyendra Chanda,[16] and Howard P. Johnson.[17]—The experimental results that Mr. Wagner has presented are of value because they can be used directly in the design of morning-glory spillways. Some interesting analytical and experimental comparisons can be made with these results. Although somewhat different geometry is used in part of the analysis, the comparisons made herein support the data presented by the author.

Dimensional analysis can be used to account for all the physical variables that affect flow over circular weirs. The variables pertinent to this case can be expressed as

$$Q = \phi\ (\mathsf{R}, P, H_s, h_p, g) \qquad (17)$$

and

$$Y = \phi\ (\mathsf{R}, P, H_s, h_p, X) \qquad (18)$$

in which h_p is the observed pressure in the air chamber under the nappe.

[15] Post-Doctoral Fellow, State Univ. of Iowa, Iowa City, Iowa.
[16] Graduate Student, State Univ. of Iowa, Iowa City, Iowa.
[17] Graduate Student, State Univ. of Iowa, Iowa City, Iowa.

Eqs. 17 and 18 can be put into the dimensionless forms,

$$C_d = \frac{Q}{\mathsf{R}\, H^{3/2}_s \sqrt{g}} \equiv \phi\left(\frac{p}{H_s}, \frac{H_s}{\mathsf{R}}, \frac{h_p}{H_s}\right) \qquad (19)$$

and

$$\frac{Y}{H_s} = \phi\left(\frac{p}{H_s}, \frac{H_s}{\mathsf{R}}, \frac{h_p}{H_s}, \frac{X}{H_s}\right) \qquad (20)$$

The coefficient of discharge C_d and the nappe profile will depend on the geometry of the weir and the pressure intensity below the nappe. The functional relationship indicated in Eqs. 19 and 20 can be determined experimentally.

If the weir is completely submerged and the depth of approach is infinite, a relationship for the coefficient of discharge can be derived analytically for the two-dimensional counterpart of the flow. Although this analytical approach has been developed for two-dimensional flow only, the results obtained can be

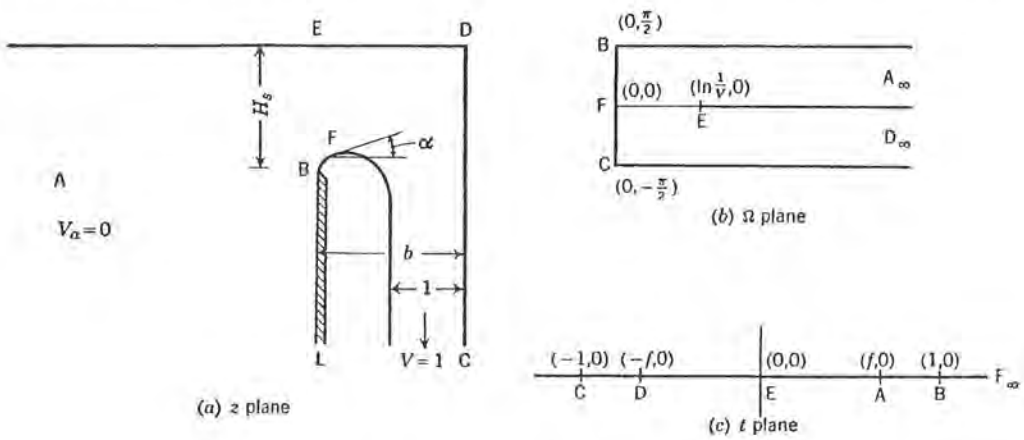

FIG. 19.—TRANSFORMATION PLANES

applied with accuracy to three-dimensional flow.[18,19] A comparison with the results obtained in Fig. 9 for the range in which the weir is submerged and the velocity of approach is negligible is relevant to the author's purpose in presenting the study.

Fig. 19(*a*) is a definition sketch of a comparable two-dimensional case. Revolution of the boundary BL around DC would give the boundary of a circular weir. The free water surface above the weir, which is practically level when the flow is submerged, is represented by ED. The weir becomes an orifice when it is submerged, and the gravitational effect on the coefficient of contraction is known to be secondary; for this reason an ultimate width of

[18] "Characteristics of Irrotational Flow Through Axially Symmetric Orifices," by H. Rouse and A. Abul-Fetouh, *Transactions*, ASME, Vol. 17, 1950, p. 421.

[19] "Free-Streamline Analyses of Transition Flow and Jet Deflection," edited by John S. McNown and Chia-Shun Yih, *Studies in Engineering, Bulletin No. 35*, State Univ. of Iowa, Iowa City, Iowa, 1953.

the nappe can be assumed. By a series of mathematical transformations, the flow is transformed into a much simpler pattern. The three transformations used in the following analysis are shown in Fig. 19. For simplicity, the ultimate width of the nappe and the velocity of the free streamline have been taken as unity.

The flow is represented in the logarithmic hodograph (the Ω-plane) by the relationship,

$$\Omega = -\ln V + i\theta \qquad (21)$$

for which the flow region takes the form indicated in Fig. 19(*b*). The latter region is mapped on the upper half of the auxiliary t-plane. As indicated in Fig. 19(*c*), the values -1, 0, and 1 are assigned to the points C, E, and B in the t-plane. The values of t for D and A can be denoted by $-f$ and f, respectively.

The appropriate relationship between Ω and t is then obtained by the use of the Schwarz-Christoffel transformation—

$$\Omega = -i\tan^{-1}\left(\sqrt{\frac{t^2-1}{1-f^2}}\right) + i\,\frac{\pi}{2} \qquad (22)$$

The constants in the transformation were evaluated by substitution of the values of Ω and t for points E and F in the two planes.

The complex potential ω can be expressed in terms of t by the methods of elementary hydrodynamics—

$$\omega = \frac{1}{\pi}\left[\ln(t+1) - \ln(t-f)\right] \qquad (23)$$

Completion of the analyses involves the algebraic definition of the lower nappe as a function of the assigned value f. The relationship between the horizontal coordinate of the upper-nappe surface (b) and the head above the weir crest (H_s) can be expressed as

$$b - 1 = \frac{1}{\pi}\int_1^{-1}\left(\frac{1}{t-f} - \frac{1}{t+1}\right)\sqrt{\frac{t^2-1}{t^2-f^2}}\,dt \qquad (24)$$

and

$$H_s = \frac{\sqrt{1-f^2}}{\pi}\int_1^{-f}\left(\frac{1}{t-f} - \frac{1}{t+f}\right)\frac{dt}{\sqrt{t^2-f^2}} \qquad (25)$$

For any given value of f, Eqs. 24 and 25 can be solved for b and H_s. The integration in Eq. 24 can only be made numerically. In Eq. 25, the integrals are elementary and have been taken from tables; the result is

$$H_s = \frac{1}{\pi}\left(1 + \frac{1}{f} + \ln\frac{1}{f}\right) \qquad (26)$$

For the two-dimensional case, if there is no loss of energy, the coefficient of discharge C_d is simply $1/b$.

The computed results are compared with the author's observations on the basis of the assumption that the ratios H_s/b and H_s/R are identical. Values of C, in the form used by Mr. Wagner, have been plotted against H_s/b in Fig. 20, in which results from Fig. 9 are included. The analytically computed coefficients of discharge correspond remarkably well with the experimental coefficients for $H_s/R > 0.8$. For $H_s/R \geq 0.8$ the surface above the weir is practically horizontal, which is the condition assumed for the upper free surface in the analytical solution. The values of the coefficients of discharge C obtained from the test results are consistently slightly higher than those

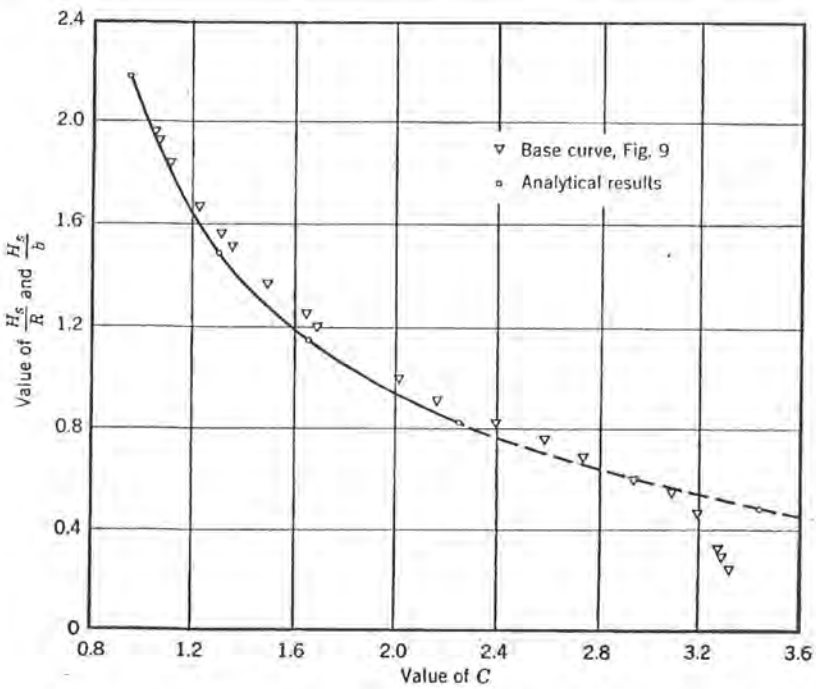

FIG. 20.—COMPARISON OF ANALYTICAL AND EXPERIMENTAL RESULTS

computed for any value of H_s/R. This may be partly explained by the fact that the latter were obtained for an infinite depth of approach.

The profile of aerated nappe surfaces presented in Fig. 8 are almost exact reproductions of the profiles presented[20] by Mr. Camp. Fig. 21 shows the position of points selected from Mr. Camp's data and plotted on the profiles determined by Mr. Wagner. The earlier work was conducted using weir arcs with radii of 3 ft, 2 ft, and 1 ft having circular angles of 29°, 44°, and 97°, respectively.

[20] "Determination of Shape of Nappe and Coefficients of Discharge of a Vertical Sharp-Crested Weir, Circular in Plan, with Radially Inward Flow," by C. S. Camp, thesis presented to the State University of Iowa, at Iowa City, in 1937, in partial fulfilment of the requirements for the degree of Master of Science.

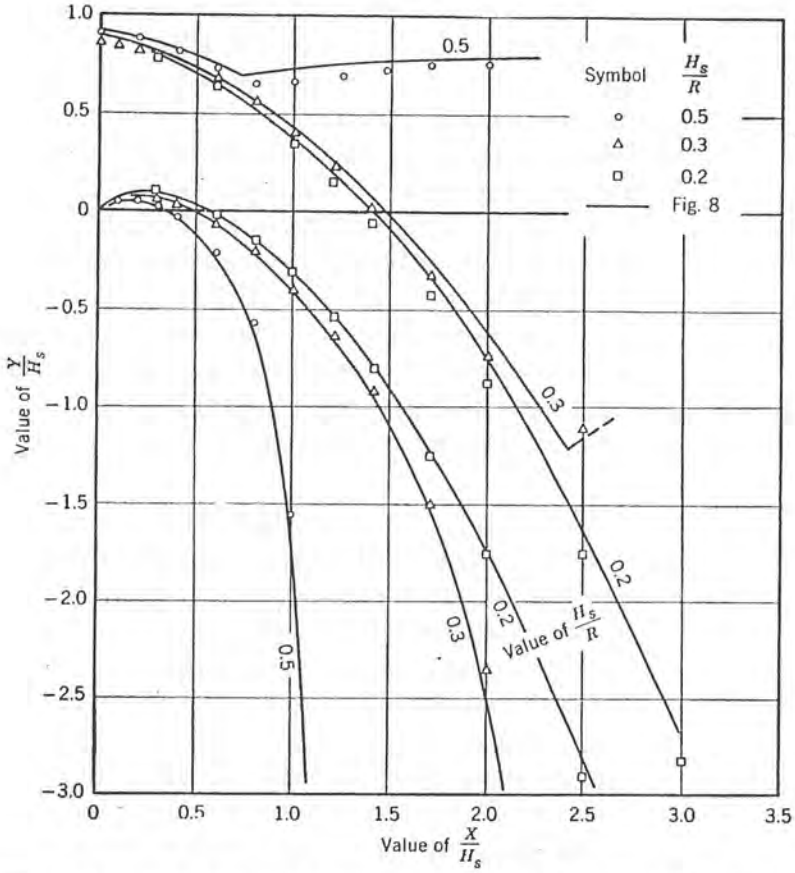

FIG. 21.—PROFILES OF AERATED NAPPE WITH NEGLIGIBLE VELOCITY OF APPROACH

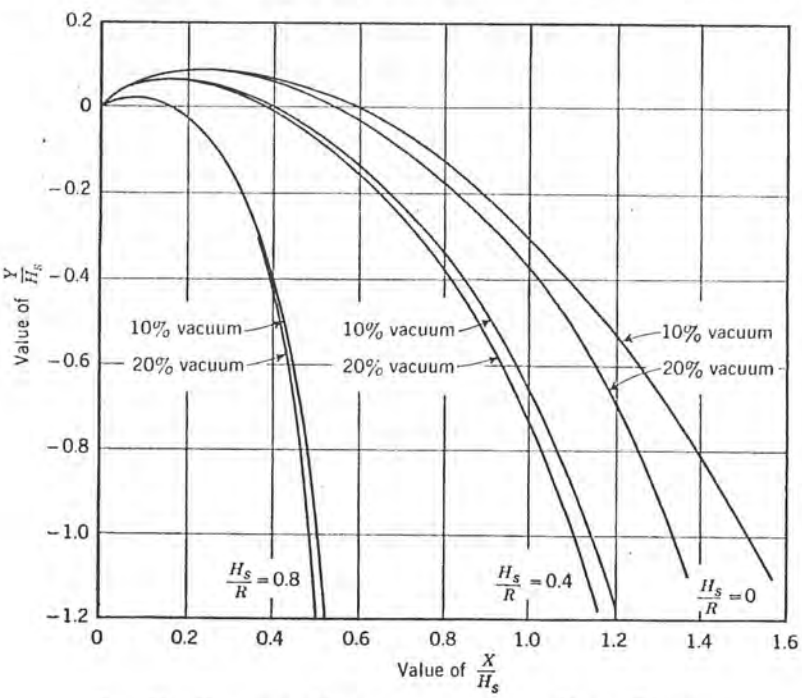

FIG. 22.—EFFECT OF VACUUM IN THE LOWER-NAPPE PROFILE

Regarding the effect of vacuum on the nappe profile, Fig. 22 reveals that, as the submergence increases, the effect of vacuum on nappe displacement diminishes. In Fig. 22, the lower-nappe profiles for $H_s/R = 0$ were secured from an investigation made[21] by L. A. Thorssen. The 10% increase in vacuum shifts the profile considerably for $H_s/R = 0$; however, for $H_s/R = 0.80$, only a slight movement of the under side of the nappe is observed for changes of vacuum from 10% to 20%. As the spillway becomes completely submerged, vacuum apparently acts as an increase in head and does not materially change the shape of the under side of the nappe.

It has been shown that the results presented by Mr. Wagner, which are well supported by earlier investigations of a similar nature, are in close agreement with the analyses presented herein for the case of a two-dimensional submerged weir when the depth of approach is infinite.

WILLIAM E. WAGNER,[22] M. ASCE.—Gratitude is expressed to the individuals who devoted so much of their time and energy to preparing their constructive discussions. The discussions are valuable contributions to the problem of properly designing the overflow section of a shaft spillway.

Figs. 15 and 17, which are supported by much experimental data, clearly define the region of low flow in which "scale effects" must be considered. It is interesting that weirs having heads as low as 0.10 ft may be used without surface tension or viscosity affecting the discharge. It should be noted, however, that these results were obtained in a laboratory under conditions where close control of the approach conditions, sharpness and cleanliness of the weir, and steadiness of flow were maintained. In general practice, where ideal conditions are difficult to attain, the minimum head for flow over a weir should be somewhat greater—possibly as high as 0.20 ft—to assure flow conditions in which scale effects can be safely ignored.

The discharge formula, Eq. 13, developed by Messrs. White and McPherson for heads greater than 0.10 ft and (H_s/R)-ratios less than 0.60, is convenient for expressing the discharge in the range of free flow. Discharge coefficients computed with Eq. 13 check within $1\frac{1}{2}$% of the coefficients shown in Fig. 9 for (H_s/R)-ratios between 0.20 and 0.50. For (H_s/R)-ratios greater than 0.50, the deviation increases—more than 4% for $H_s/R = 0.60$ (Fig. 23). This deviation leads to the question of the upper limit at which weir flow changes in character to flow through a re-entrant tube. Messrs. White and McPherson showed graphically, in Fig. 16, that this change occurs at $H_s/R = 0.60$. It is difficult to visualize the abrupt change from weir to tube flow indicated in Fig. 16 for the following reasons:

[21] "Effect of Vacuum on a Free Nappe," by L. A. Thorssen, thesis presented to the State University of Iowa at Iowa City, in 1946, in partial fulfilment of the requirements for the degree of Master of Science.

[22] Engr., Design and Construction Div., Bureau of Reclamation, U. S. Dept. of the Interior, Denver, Colo.

1. As noted by Mr. Blaisdell, the head on a weir is usually considered to be affected when the "tailwater reaches a level above the weir crest exceeding the critical depth of flow d_c," or when $Y/H_s = 0.667$. Table 4 shows that this tailwater (or boil height) is reached when H_s/R is between 0.45 and 0.50. When $H_s/R = 0.60$, $Y/H_s = 0.94$; the high point of the boil is at a level above the crest equal to 0.94 of the head. A backwater of this height surely affects

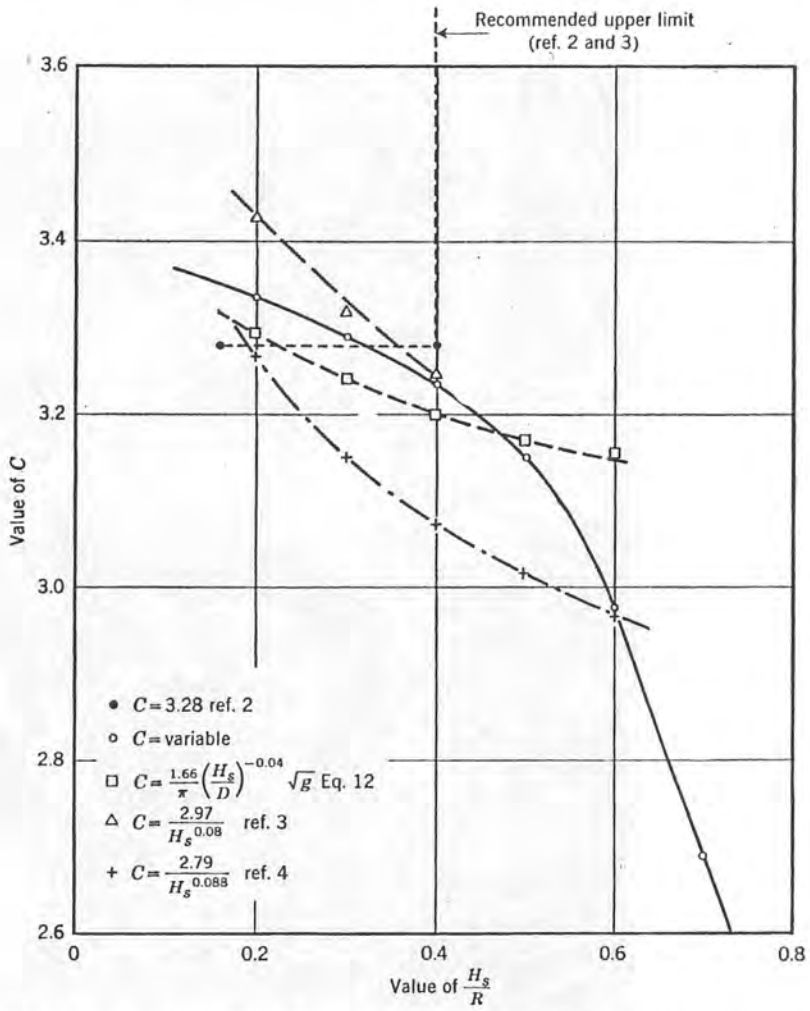

FIG. 23.—COMPARISON OF FREE-FLOW DISCHARGE COEFFICIENTS DETERMINED BY VARIOUS EXPERIMENTERS (NEGLIGIBLE VELOCITY OF APPROACH AND AERATED NAPPE)

the head upstream from the weir and causes a departure from true weir flow at some (H_s/R)-ratio less than 0.60; in Fig. 24 there is shown the operation of the circular weir when $H_s/R = 0.50$.

2. In Fig. 25, some of the writer's original data are plotted on a graph similar to Fig. 16. Fig. 25 clearly indicates that a transition zone exists between tube flow and weir flow and supports the original conclusion that the

upper limit of weir flow is $H_s/R = 0.45$ and the lower limit of tube (or orifice) flow is $H_s/R = 1.00$. Unfortunately, actual calibration points of other experimenters are not available. However, the reports of Messrs. Camp and Howe[2] and H. J. F. Gourley[3] indicate a similar transition zone; they recommend an upper limit of $H_s/R = 0.40$ when using their formulas (Fig. 23).

The writer questions whether a vortex can form in the range of flows where H_s/R is less than 0.60 as suggested by Messrs. White and McPherson.

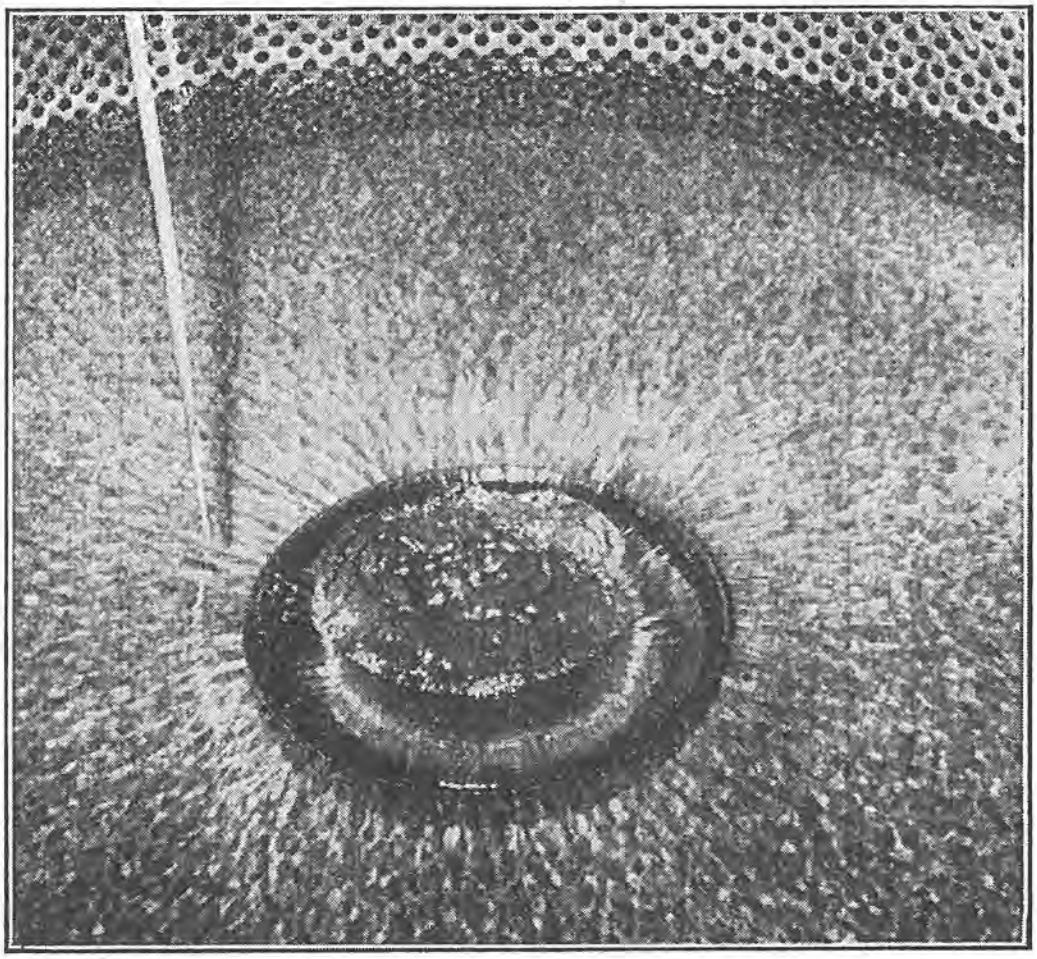

FIG. 24.—FLOW WHEN $H_s/R = 0.50$

At these flows, the velocity of the upper-nappe surface is comparatively high and well directed with a clear line of demarcation between the boil and the nappe, as shown in Fig. 24. Any vortex beginning to form in the nappe is carried immediately through the weir. Because of the turbulence within the boil it is unlikely that a vortex can be formed and maintained in this region. However, air may become entrained where the nappe joins the boil and per-

haps may affect the weir discharge—it is questionable whether radial piers or baffles will prevent the entrainment of air. C. J. Posey, M. ASCE, and H. Hsu[12] found in their vortex studies that "with purely radial inflow the vortex is small and transitory; its effect on discharge is negligible."

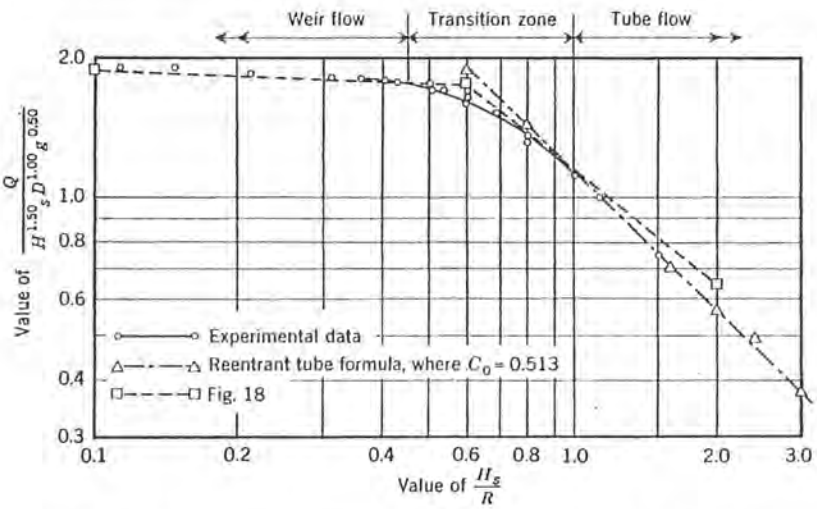

Fig. 25.—The Region Where Weir Flow Changes to Tube Flow

Mr. Blaisdell questions the writer's statement that "most morning-glory spillways are designed for free flow." Messrs. White and McPherson, in their discussion, state:

> "Of the eighteen morning-glory spillways for which details have been published[10] only four are designed to perform submerged, six for ratios of H_s/D between 0.10 and 0.20, and eight for ratios of H_s/D less than 0.10."

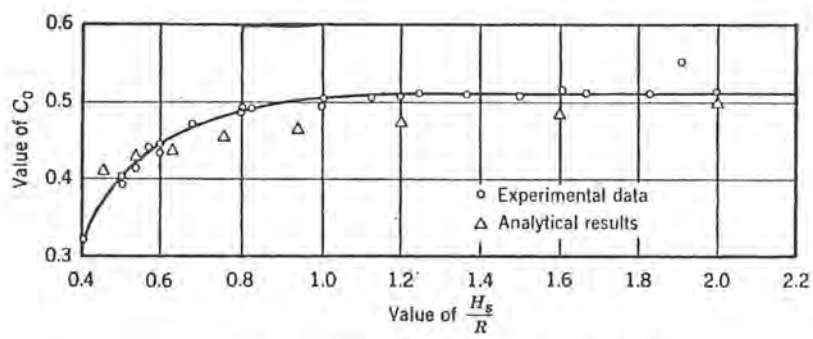

Fig. 26.—Relationship Between C_0 and H_s/R

With more than 75% of the reported morning-glory spillways designed to operate in the free-flow range, the statement can hardly be questioned.

As suggested by Mr. Blaisdell, the discharge coefficient, C_o, is given in Fig. 26 for (H_s/R)-values between 0.4 and 2.0. For (H_s/R)-values greater

than 1.00, the coefficient is practically constant at 0.51. This value checks very closely the coefficient of 0.52 commonly used for flow through a re-entrant tube. For comparison, the analytical results of Messrs. Mostafa, Chanda, and Johnson expressed in terms of C_o and H_s/R are also shown in Fig. 26. The two results compare remarkably well, considering the entirely different methods used in determining the coefficients.

The comparison in Fig. 21 between the profiles measured by Messrs. Camp and Howe and those measured by the writer supports the reliability of the nappe shapes. It is particularly gratifying that the profiles check in the vicinity of the weir springpoint as this region is important and extremely difficult to measure with accuracy.

PERFORMANCE TESTS ON PROTOTYPE AND MODEL

By Alvin J. Peterka,[1] M. ASCE

With Discussion by Messrs. Fred W. Blaisdell, and Alvin J. Peterka

Synopsis

The performance of the model of the Heart Butte Dam (North Dakota) morning-glory spillway and outlet works is compared with the performance of the prototype structure. Certain elements of the prototype performance which could not be included in the model tests are also described. The results of the comparisons add further support to the premise that prototype performance can be predicted with accuracy from model tests.

Introduction

There is a general need for data which can be used to compare the performance of models and prototypes and thus extend the range of usefulness of models as aids to design. Prototype data are often difficult to obtain and when obtained they are usually not in the prototype range of heads or discharges, making direct comparisons difficult. The Heart Butte Dam (North Dakota) spillway, however, operated soon after its completion and almost immediately after the hydraulic model tests were made. With the model test data still "fresh" it was possible to obtain, on short notice, prototype data that could be compared with model tests.

A brief description is presented subsequently of the hydraulic model tests that were conducted on a 1:21.5 model to aid in the design of the structure and to yield data useful in operating the prototype structure. Following a report of the 1950 flood on the Heart River, which produced a discharge of 68% of the maximum anticipated outflow, the performance of the prototype structure is described.

Direct model-prototype comparisons are made of spillway performance and discharge for free and submerged conditions, spillway air demand, stilling-basin performance—including erosion downstream from the basin—and tailwater elevations in the excavated channel. Photographs and charts are used to illustrate the agreement found between model and prototype performance.

Certain aspects of the prototype performance which are beyond the scope of model tests are also cited, including the effect of ice completely covering the morning-glory spillway during submerged discharge, the erosion of the down-

Note.—Published, essentially as printed here, in April, 1954, as *Proceedings-Separate No. 433*. Positions and titles given are those in effect when the paper or discussion was approved for publication in *Transactions*.

[1] Hydr. Engr., Research, Eng. Labs. Branch, Design and Construction Div., Bureau of Reclamation, U. S. Dept. of the Interior, Denver, Colo.

stream riverbanks, and the effectiveness of the riprap used on the excavated channel banks. The results of an inspection of the spillway tunnel and structure following the 1950 and 1951 floods are also presented.

Description of Project

The Heart Butte Dam is located on the Heart River 60 miles west of Bismarck, N. Dak., and is a part of the Heart River unit of the Missouri River Basin Project. The dam is of compacted earth fill with a rock riprap cover, rises 135 ft above the Heart River stream bed, and is 1,860 ft long (Fig. 1). The dam is a combined irrigation and flood-control structure, with no power being developed. The reservoir at maximum water-surface elevation contains 392,500 acre-ft from a drainage area of 1,810 sq miles.

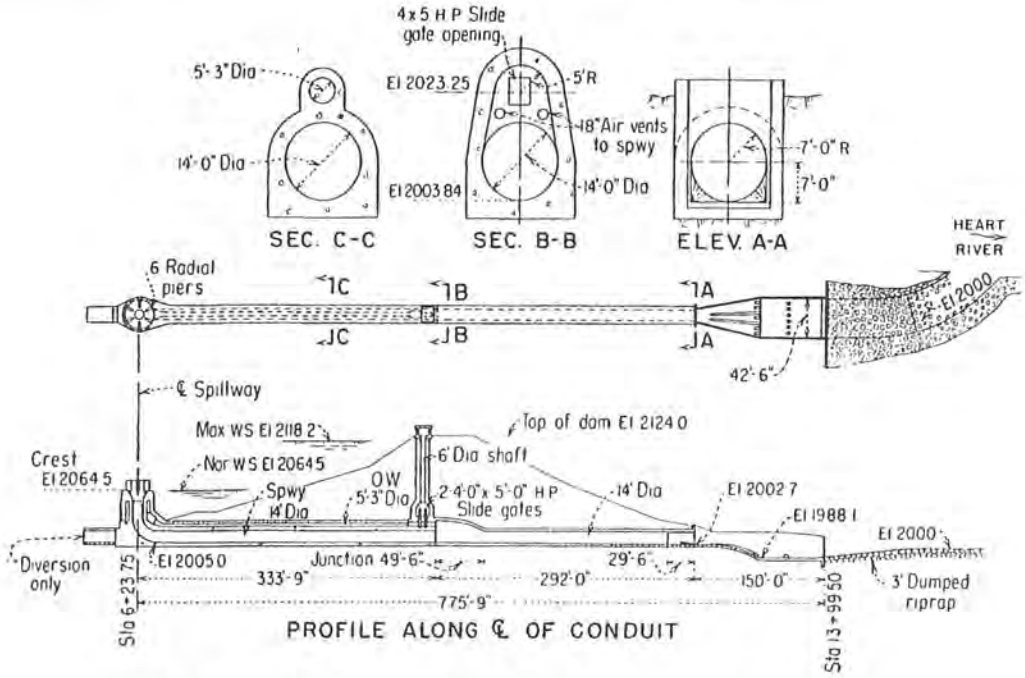

Fig. 1.—General Plan and Sections for Spillway and Outlet Works

The flood-control spillway, located near the right abutment, consists of a morning-glory spillway having an outside diameter of 32 ft 6 in. and discharging into a vertical shaft 11 ft in diameter. The shaft is connected to a 90° vertical bend and nearly horizontal tunnel 14 ft in diameter and approximately 800 ft long (Fig. 2), which leads to the hydraulic-jump stilling basin (Fig. 1). The maximum vertical fall from headwater to stilling-basin floor is approximately 130 ft.

The morning-glory spillway at Heart Butte is unusual in that it is designed to operate throughout the range of free discharge, throughout the transition range between free and submerged discharge, and up to a submergence as great as 53.7 ft of water above the crest. The spillway crest is equipped with six equally spaced piers placed radially in plan; it does not have control gates

of any kind. The outlet works, used primarily for release of irrigation water (Figs. 1 and 2), is an integral part of the spillway structure. The entrance to the outlet works encircles the vertical shaft of the spillway and discharges into a 5.25-ft-diameter tunnel located directly above the spillway tunnel. The smaller tunnel is controlled at its lower end by a 4-ft by 5-ft, high-pressure slide gate and discharges into the spillway tunnel, entering the larger tunnel from above through a specially designed junction section. The spillway tunnel carries the outlet-works discharge into the single stilling basin used for both spillway and outlet-works discharges (Fig. 1).

The capacity of the outlet works is 650 cu ft per sec with the reservoir elevation at the spillway crest level (El. 2064.50). The outlet works is closed when the spillway is in normal operation. The capacity of the spillway is 5,450 cu ft per sec at maximum reservoir elevation (El. 2118.2).

The feasibility of a combined spillway and outlet structure was determined, and the detailed shape and arrangement of the various parts of the structure were developed from hydraulic model tests on a 1 : 21.5 model.

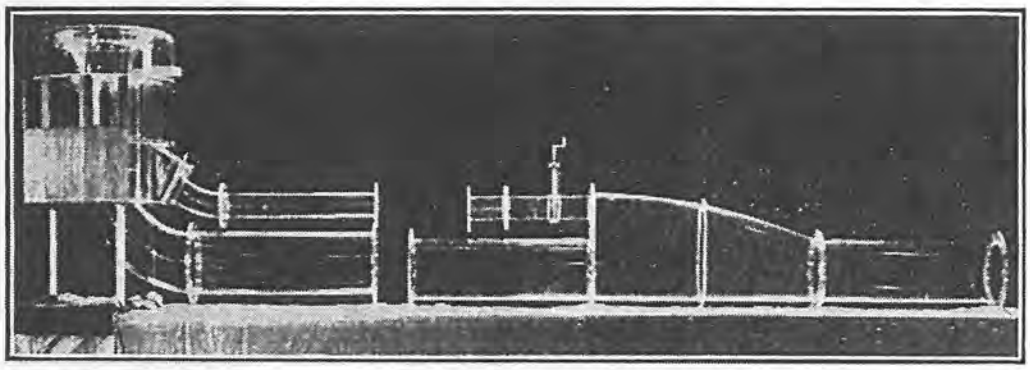

Fig. 2.—Transparent-Plastic Model of the Spillway and Outlet Works

Hydraulic Model Tests

The Model.—Tests were made on a 1:21.5 model of the discharge structures, including the spillway, the outlet-works intake structure, and the surrounding topography; these were constructed in the head box. The two tunnels including the outlet-works control gate, the 90° vertical bend, and the tunnel-junction section were built outside the head box. The stilling basin common to the spillway and outlet works and part of the down-river topography were constructed in the tail box. Much of the structure was modeled in transparent plastic to permit the observation of flow conditions throughout the structure (Fig. 2).

Spillway and Pier Tests.—Tests on a preliminary design of the morning-glory spillway indicated that the discharge capacity was larger than necessary. Consequently, the diameter of the vertical shaft was reduced from 14 ft to 11 ft, the spillway profile was reshaped to fit the vertical shaft, and a 90° vertical-transition bend was installed. The discharge capacity was then found to be approximately correct, according to the irrigation and flood-control requirements.

Vortices which formed in the model when the spillway was submerged were thoroughly investigated, experimentally and mathematically, and when it was found that the same vortices could form to scale in the prototype, attempts were made to eliminate them. Various arrangements of piers, dividing walls, and floating and fixed rafts were tested, and as a result six spillway-crest piers were recommended for use on the prototype (Fig. 3). It was found unnecessary to extend the piers as high as the maximum head-water elevation, a distance of 54 ft. Because vortex action diminished rapidly

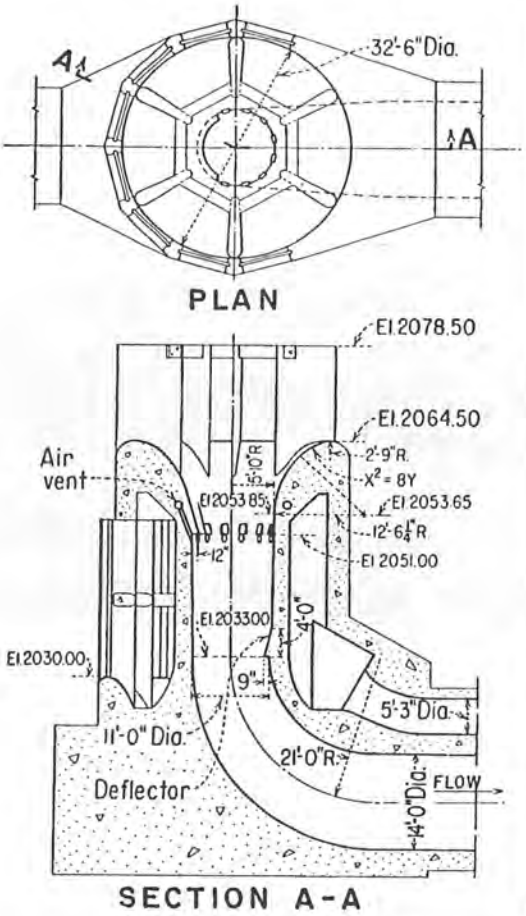

Fig. 3.—Entrance Details

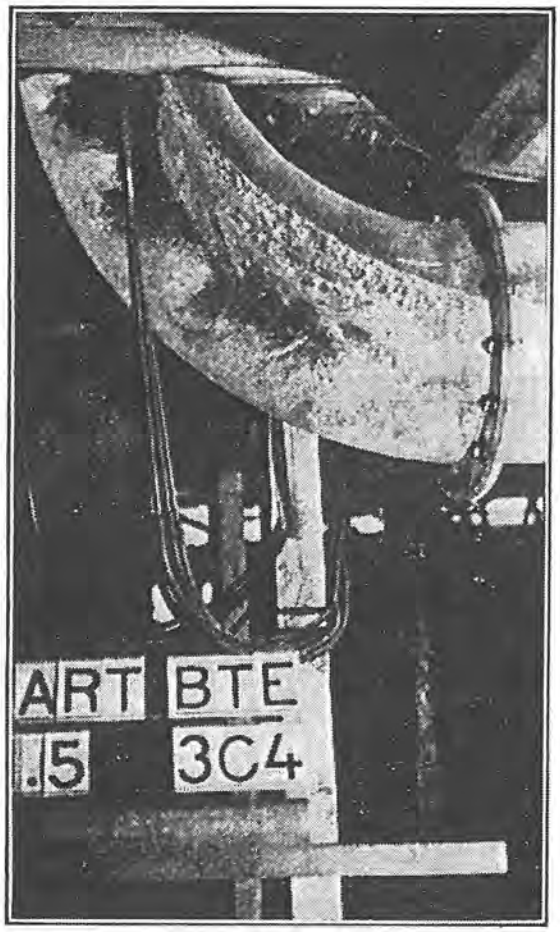

Fig. 4.—Flow in Bend

when the head on the crest approached 14 ft, it was necessary to extend the piers only to this height.

Deflector and Vertical Bend Tests.—The tests determining the most satisfactory type of vertical bend showed that a diverging elbow joining the 11-ft-diameter shaft with the 14-ft-diameter horizontal tunnel had a distinct advantage in that it provided greater space between the water surface and the tunnel crown for ventilation in the vertical bend from the atmosphere at the tunnel outlet. However, with this arrangement in place, difficulty was encountered in preventing the horizontal tunnel from filling unexpectedly when

the spillway and outlet works were both operating. Flow passing through the bend did not break cleanly from the crown of the bend. The flow tended to follow the crown through the bend, causing a change in the location of the flow control. When the control moved downstream the head on the system increased, causing a temporary increase in discharge which filled the tunnel. This resulted in negative pressures of considerable magnitude on the spillway face. After the tunnel filled, it was impossible to obtain open-channel flow again unless the head on the spillway was reduced considerably below the point where it had filled. Consequently, a small deflector was placed at the base of the vertical shaft on the downstream, or crown, side of the shaft (Fig. 3). The deflector (*a*) provided a positive control at the base of the vertical shaft and prevented the tunnel from filling, (*b*) had a stabilizing effect on smaller flows and provided a flat water surface on all flows passing into the vertical bend, and (*c*) provided a clear passage for air to circulate as far upstream as the base of the deflector. The thickness of the deflector at the base was varied in the model to determine the size necessary to meet exactly the discharge requirements at certain heads because precise tests had shown that the 11-ft-diameter vertical shaft was slightly too large. Spillway flow in the tunnel was found to be satisfactory after the structure had been modified as described. In Fig. 4 there is shown the flow entering, passing through, and leaving the vertical bend with the deflector in place; the surface of the flow entering the tunnel is smooth and flat.

Stilling-Basin Tests.—An effective energy-dissipating device was required in the stilling basin because of the friable nature of the material in the river channel and riverbanks; even moderate erosion tendencies and wave heights could not be tolerated. Consequently, it was felt that a hydraulic-jump basin would be necessary to provide good energy dissipation and a smooth water surface in the downstream channel. The first stilling-basin tests indicated that the main problem was concerned with spreading the high-velocity water (60 ft per sec) into a uniformly distributed sheet suitable for the formation of a jump. The first attempt to induce lateral spreading was by use of a sudden rise in the stilling-basin floor downstream from the tunnel portal. It was found that a hump sufficiently long to produce even a moderate spreading resulted in an extremely long stilling-basin structure. The problem was solved by discharging the flow on a horizontal floor 23 ft long after the flow had passed through a transition section at the end of the tunnel which began the spreading of the flow (Fig. 5). The flat floor induced more spreading before the flow dropped in its downward trajectory. Tests showed that this arrangement produced good lateral distribution of flow as far downstream as the trajectory curve and fairly good distribution beyond that. The addition of two low walls, placed so as to divide the basin approximately into thirds, produced excellent downstream distribution of flow and an efficient hydraulic jump in the basin. The walls, which varied from 3 ft to 4 ft high, did not extend upward through the flow for high discharges but produced the desired effect of distributing the flow from a 14-ft width at the tunnel portal to an ultimate 42.5-ft width in a horizontal distance of 75 ft.

Chute blocks and baffle piers were used to increase the fine-grain turbulence in the basin and thereby reduce the necessary length of the stilling basin. The shapes of the baffle piers, dividing wall noses, and trajectory curves were modified to provide atmospheric (or greater) pressures on critical areas as tests on preliminary designs had indicated that pressures as low as 18 ft of water below atmospheric pressure occurred downstream from sharp corners.

The performance of the stilling basin was evaluated from erosion tests made on a movable bed located downstream from the model basin and from wave-height observations made in the excavated tailrace channel. Erosion tests were made using a well-graded sand; 100% passed through a No. 4 sieve and 3% passed through a No. 50 sieve. These tests showed that erosion tendencies were less severe on the channel bottom than on the sloping banks. Wave action originating in the hydraulic jump combined with a slight surging

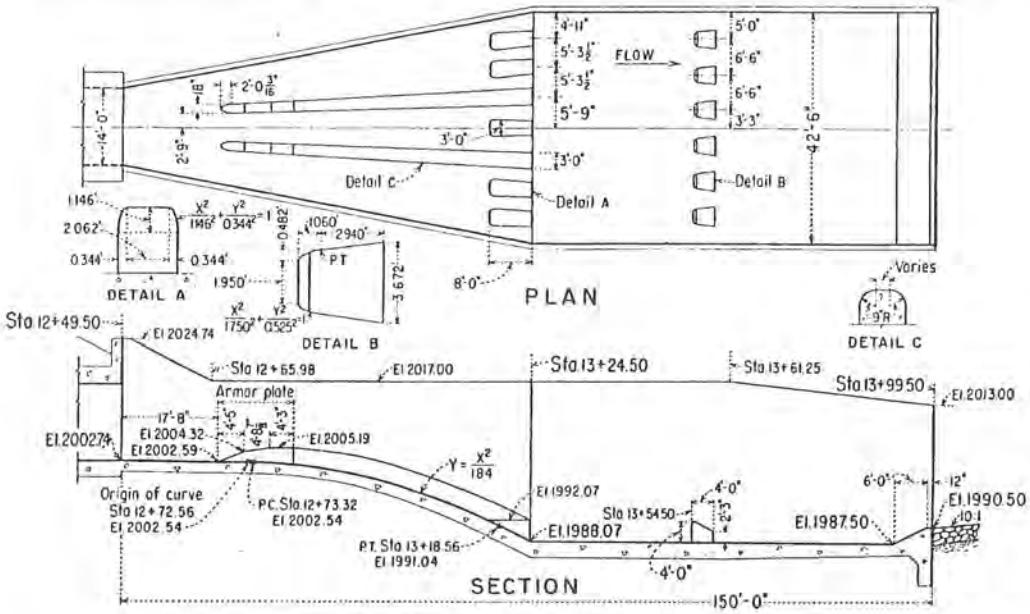

FIG. 5.—STILLING-BASIN DETAILS

action caused rapid decay of the banks. Every effort was made to keep the waves and surges to a minimum, but it was deemed necessary to riprap the banks of the prototype.

Spillway-Air Tests.—When the morning-glory spillway was designed, it was believed that air introduced into the spillway discharge at a point just below the spillway crest might help to cushion the impact of the flow passing around the vertical bend. It was important that unnecessary impact and vibrations caused by the flowing water be eliminated because the entire structure was to be constructed on sand. Furthermore, if for any reason cavitation should occur in or near the vertical bend, the presence of the entrained air might reduce damage to the concrete tunnel lining. Laboratory tests have shown that even very small quantities of air introduced in the flow will delay cavitation damage.[2]

[2] "The Effect of Entrained Air on Cavitation Pitting," by Alvin J. Peterka, *Proceedings*, Minnesota International Hydraulics Convention, IAHR, ASCE, 1953.

Model tests on the many devices proposed to increase entrained air in the flow showed that only a relatively small quantity of air entered the flow regardless of the arrangement of the air-entraining devices. However, it was known that airflow in small hydraulic models is uncertain and that a greater percentage of air can be expected to enter a similar prototype structure. The increase to be expected in the prototype is not known and cannot be computed as the factors governing the entrainment of air are not generally known. After tests on many different model arrangements, it was finally decided to construct the prototype air vents shown in Fig. 3 and to provide measuring facilities in the prototype structure so that air-quantity determinations could be made. Fig. 4 shows the vertical bend discharging 3,750 cu ft per sec with air induced by the air deflectors entrained in the flow. To the unaided eye the air flow appeared continuous, but in the 1/15,000-sec exposure photograph

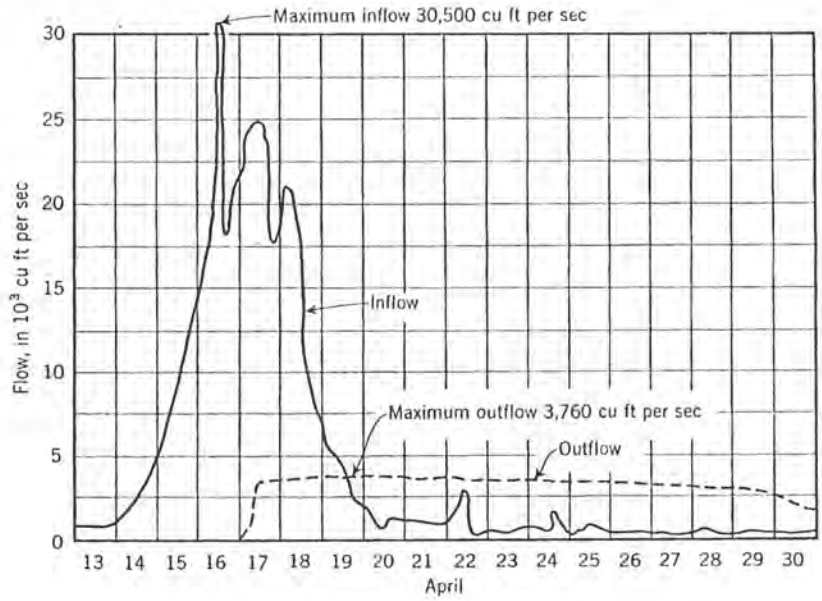

Fig. 6.—Flood Hydrographs for 1950

the air is shown to enter in gusts; this was more clearly illustrated in the extremely slow motion pictures made of this condition.

Description of 1950 Spring Flood

Preceding the heavy runoff in April, 1950, the weather had been cold and the ground was frozen and covered with snow. A stiff wind had blown the snow off the ridges, concentrating it on the slopes and in the valleys of the drainage area. The weather turned unseasonably warm, causing a fast melt and heavy runoff from the frozen terrain. On April 15, 1950, the temperature was 80°F, and the snow melt caused an increase in the inflow to the reservoir of from 5,000 cu ft per sec to 30,500 cu ft per sec on April 16 (Fig. 6). The high runoff and inflow continued through April 17 and most of April 18. The spillway went into operation on April 17, reaching a peak flow of 3,760

cu ft per sec on April 19, and continued without appreciable reduction in discharge through April 29—a period of more than twelve days. The maximum outflow discharge represented 68% of the anticipated maximum outflow, and the maximum reservoir elevation indicated that 38% of the flood storage had been utilized. Fig. 7 shows the hydraulic data in terms of the spillway elevations. At the time of maximum outflow the spillway crest was submerged 17.24 ft, making the reservoir elevation 3.24 ft over the tops of the spillway piers. The maximum height of fall from headwater to tailwater was 72 ft, and the energy entering the stilling basin was 31,000 hp.

The Heart River, on which the Heart Butte Dam is constructed, flows into the Missouri River at Mandan, N. Dak., about 6 miles from Bismarck.

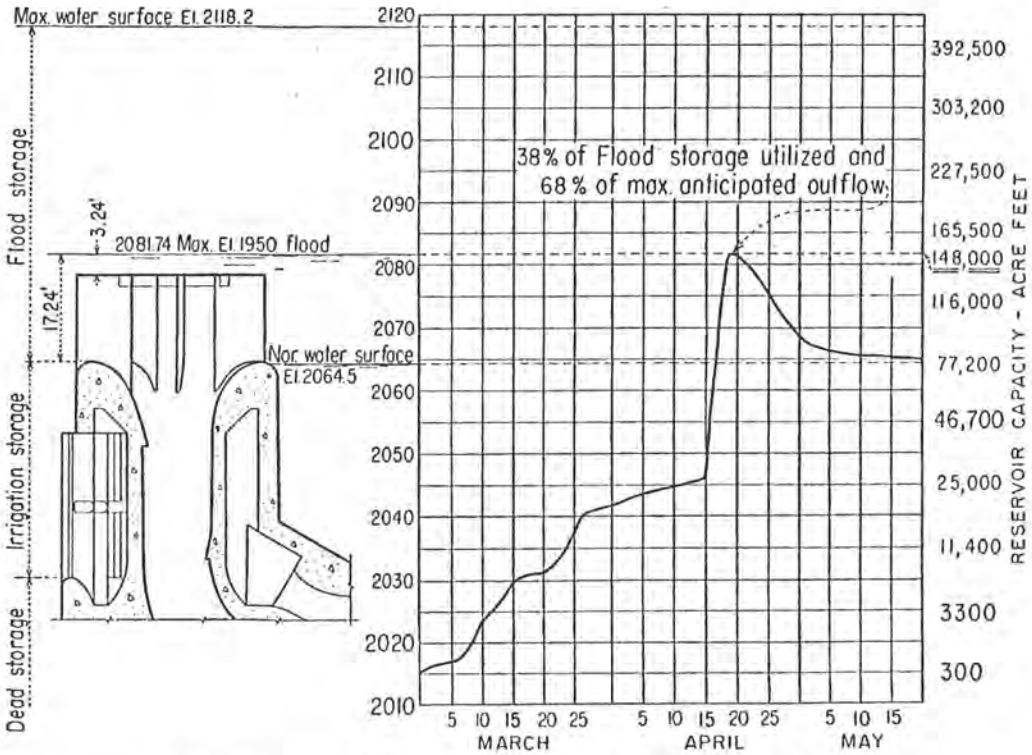

Fig. 7.—Reservoir Elevations and Hydraulic Data for 1950 Flood

Some flood damage occurred at Mandan, caused primarily by high water in the Missouri River. Both rail and highway travel were impossible during the high water. The Heart Butte Dam undoubtedly reduced the flood crest at Mandan, but no data are available as to the extent. The structure operated as intended and therefore provided as much protection as was necessary.

Model-Prototype Comparison Tests

It was recognized that model-prototype comparison data pertaining to the spillway discharge and the air demand would be particularly valuable and that comparisons of the erosion in the excavated channel, wave heights below the

stilling basin, and profiles below the stilling basin would also be of interest. In the course of recording these data, other comparisons were made which included observations on vortex formation above the spillway and the computed and actual tailwater curves in the excavated channel and in the river. Water-surface profiles in the stilling basin and data on the riprap protection were also obtained.

Spillway Capacity.—During the 1950 runoff when the headwater was above the spillway crest, readings were taken each morning and afternoon on the headwater gage located in the gate-operating house (Fig. 7). Using the discharge-capacity curve obtained from the model tests on the morning-glory spillway (Fig. 8), an outflow hydrograph was prepared (Fig. 9). On April 17, 19, and 25, and May 1, the Geological Survey, United States Department

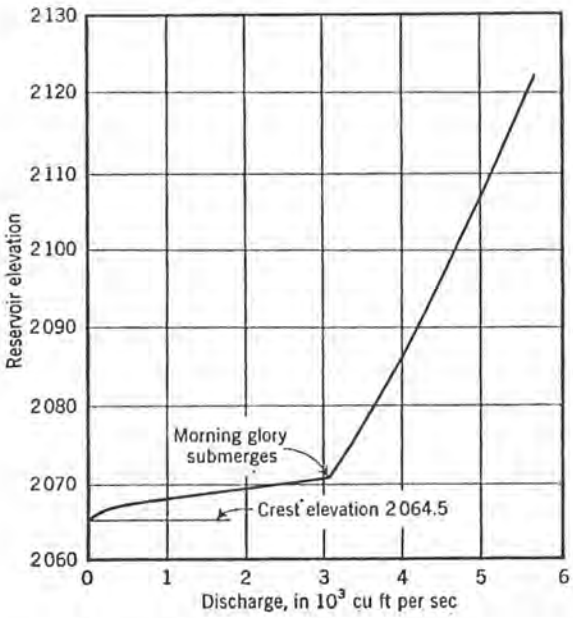

FIG. 8.—DISCHARGE CAPACITY OF SPILLWAY FROM MODEL STUDY

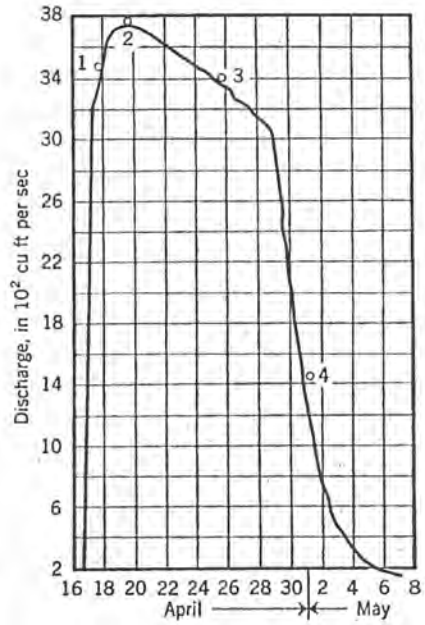

FIG. 9.—COMPARISON BETWEEN MODEL AND PROTOTYPE DISCHARGE

of the Interior (USGS), made stream-gage measurements in the river downstream from the stilling basin to determine the discharge of the spillway. During these measurements, the irrigation outlet works were closed. The discharges determined by the USGS, designated by circles in Fig. 9, indicate the agreement between the model and prototype measurements. Differences were 4.6%, 1.1%, and 1.8% for the April 17, 19, and 25 determinations, respectively. For all practical purposes, these points indicate good agreement between model and prototype discharge characteristics. On May 1 the difference was 23.4%, indicating considerable disagreement; however, the measurements on April 17 and May 1 were not made under ideal conditions. The USGS notes for April 17 indicated that ice in the channel may have affected the measurements, and on May 1, when the greatest disagreement was found, that a wind was blowing which might have altered the relationship

between the head on the crest and the headwater-gage reading. Another possible cause for the discrepancy might be the rapid fall in discharge during the measurements on May 1, as indicated in the hydrograph in Fig. 9. In general, however, the agreement between model and prototype discharges is excellent—particularly at the higher discharges—and it is believed that the rating curve obtained from the model adequately serves to determine discharges through the prototype morning-glory spillway.

Spillway Performance with Free and Submerged Discharges.—During the model tests it was noticed that for certain arrangements of the structure the transition from free flow to submerged flow and vice versa was accompanied by violent surging in the vertical shaft. In some cases the unstable flow condition existed over several feet of change in reservoir elevation. A mushroom-shaped column of water rose and fell in the shaft, causing excessive splashing and turbulence. In addition to causing poor hydraulic conditions, it was feared that the prototype structure would be subjected to objectionable forces and vibrations. Consequently, the structure recommended for field construction was developed by model tests to provide a minimum transition range—that is, less than 0.2 ft prototype. The rating curve determined by model tests (Fig. 8) indicates the change from one type of flow to the other. It was for this reason that the prototype spillway was closely observed when the headwater reached the transition range.

On April 16, 1950, the reservoir had risen to the spillway crest (El. 2064.5). Ice covered most of the reservoir area, but there was some open water close to the spillway. By April 17, 1950, the reservoir had risen sufficiently to submerge the spillway and provide a head of 9.4 ft on the crest, corresponding to a discharge of 3,250 cu ft per sec. Sometime during the night the reservoir elevation had passed through the critical region where the flow changes from free to submerged. Some ice had been discharged through the spillway, but it had caused no apparent difficulty. On April 18, the piers and the reservoir were completely covered with ice which appeared to be 12 in. thick. Some trash had collected over the spillway; a slight movement of the trash was the only evidence that the spillway existed. The reservoir continued to rise through April 19, but on April 20 it began to recede. On April 21, the reservoir was still approximately 1 ft above the piers. The ice was breaking up fast, and the wind was shifting it around the spillway area. Regardless of whether ice or water was over the spillway entrance, the operation was satisfactory, with no evidence of serious vortex action.

On April 26, with the reservoir at El. 2074 and the piers again visible, operation was also satisfactory. Water inside the pier structure was level with the reservoir, and only occasional light turbulence was visible. On April 28, the reservoir was down to El. 2071, or about 0.7 ft above the point where the flow changes from submerged to free discharge (Figs. 8 and 10). Fig. 10 indicates the mild condition inside the spillway; there was no pulsation or rising and falling of the "mushroom."

On April 29, the reservoir had fallen to 0.8 ft below the critical submergence point, and although the "mushroom" was lower in the shaft it was still stable with no evident rising and falling. Again the flow had passed through the critical range during the night when photographs and observations were im-

practicable. Indications are that the prototype was submerged at about the headwater elevation shown by the break on the curve in Fig. 8 and that the change occurred abruptly as indicated on the model curve. On April 30, the spillway was discharging freely (1,600 cu ft per sec) with the reservoir at El. 2068.6. No spray emerged from the morning-glory hole at this or lower heads as has been noted on some other morning-glory spillways.

Throughout the flow range there was no vibration noticeable in the structure. Several excursions into the outlet-works gate access well were made while the spillway was operating. Efforts were made to detect vibration by feeling the various parts of the structure; none could be detected. Also, there was no noise from the spillway that could be detected from the top of the dam or from the reservoir banks. The outlet-works gate was opened and closed on April 21, 1950; no noise or vibration was evident during this operation.

One year later the spillway again went into operation, reaching maximum reservoir El. 2075—about 7 ft less than occurred in 1950. On March 27, 1951,

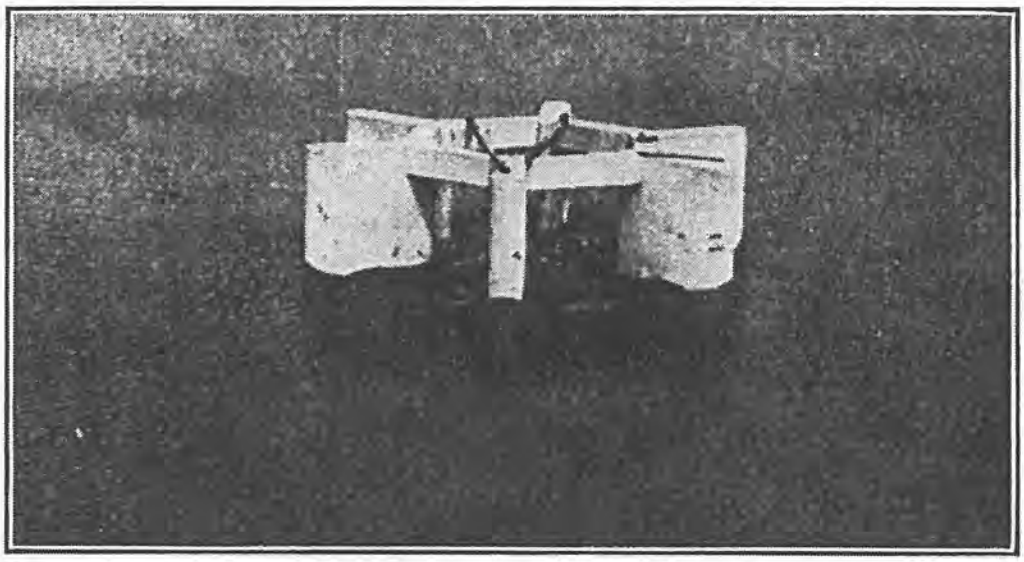

Fig. 10.—Spillway on April 28, 1950

the reservoir was at El. 2070, about 0.2 ft below the submergence point. Again the operation was satisfactory. Despite the fact that on February 15, 1951, the ice in the reservoir was 36 in. thick, there was no visible difficulty caused by the ice.

Spillway-Air Demand.—Measurements were made in the model to determine the quantity of air being entrained by the spillway discharge as it passed over the air-entraining deflectors located on the spillway face just below the spillway crest (Fig. 3). Air-flow measurements in the model were made using a $\frac{3}{8}$-in.-diameter sharp-edged orifice connected to a differential water manometer. All air entering the model passed through the orifice before entering the venting system. Because the differential was extremely small for the air quantity flowing in the model, a specially constructed gage was used which multiplied the actual differential so that more consistent readings could be obtained throughout a series of tests. The gage was calibrated to provide

reasonably accurate air measurements, but consistency was considered more important than absolute accuracy.

At the time of prototype construction, pipe was extremely difficult to obtain on short notice. Because the model tests continued through most of the construction period, only a small quantity of pipe and special fittings could be provided for measuring stations in the prototype. Thus, the data obtained from the prototype are not sufficient to determine pressures in various parts of the venting system but do indicate the quantity of air flow in the prototype for various spillway discharges.

The air quantity flowing in the prototype vents was determined by measuring the air velocity with a hand-held anemometer in the 18-in.-diameter air-vent pipes. Air-velocity determinations were made in one of the vertical

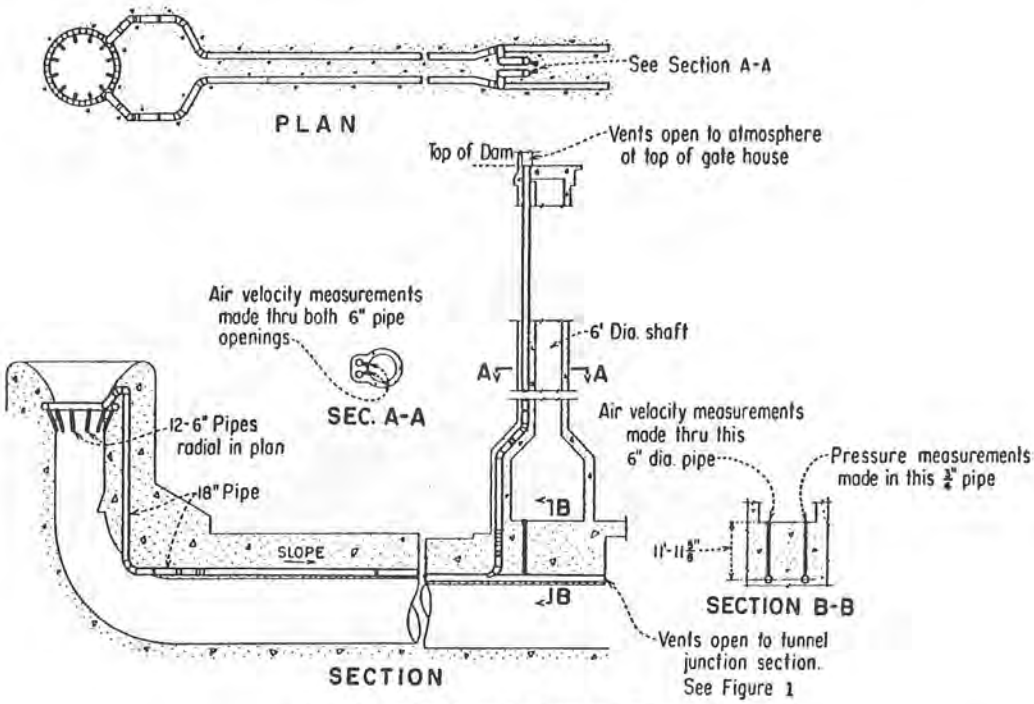

FIG. 11.—AIR-VENT SYSTEM FOR SPILLWAY

pipes contained in the wall of the gate-operating house and in one of the horizontal pipes just upstream from the point where it emerges into the tunnel-junction section (Fig. 11). Concurrent with the air-velocity measurements, pressure measurements were made in the other horizontal air vent using a U-tube water manometer. The pressure-measuring station is also shown in Fig. 11.

Air flow in the prototype was not smooth, as evidenced by the sound of the air flow and the difficulty experienced in holding the anemometer steady. There was chance for considerable error in any one anemometer measurement, and so several determinations were made for each flow in both the vertical and horizontal vent pipes. The anemometer recorded lineal feet of flow which, when divided by the elapsed time, gave the air velocity in feet per second. Each observation lasted about 2 min and sufficient readings were taken so

that the average velocity of air flow was that occurring for a testing time of from 6 min to 12 min. Pressures measured in the U-tube also indicated that the air flow was not steady. Differentials varied from plus to minus, but average readings were relatively easy to obtain.

The results of the determinations of air quantity and pressure are shown in Fig. 12. The percentage of air entrained in the spillway discharge for both model and prototype showed a decrease as the discharge increased. In this respect the model predicted the performance of the prototype. The prototype, however, entrained approximately four times as much air as was predicted by the model. In this respect, also, the prototype performed as anticipated except that accurate predictions could not be made from the model tests to determine how much more air the prototype would entrain. When the model showed an air entrainment of 5.5% of the water discharge for 1,000 cu ft per sec of spillway discharge, the prototype showed 20.5%. For 3,600 cu ft per sec the model showed 1.9% and the prototype 7.7%.

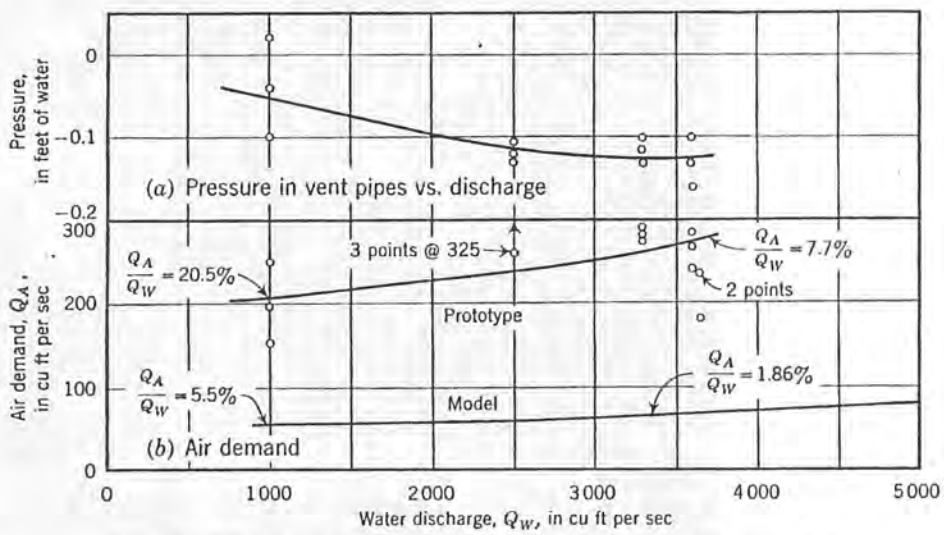

FIG. 12.—RELATIONSHIP BETWEEN SPILLWAY AIR DEMAND AND DISCHARGE

The points from which the curves in Fig. 12 were drawn are also shown. The prototype air-demand curve was not drawn through the points for 2,500 cu ft per sec because the pressure values, which were considered more reliable, indicated that the curve should be drawn below the velocity points. Moreover, the shape of the curve was then similar to the model curve, which was based on very consistent data. To support the validity of the shape and values of the prototype air-demand curve, computations of air flow were made using the measured pressures, assuming that both vent pipes carried equal quantities of air and using the usual losses for bends, friction, inlet, and similar items. The computed values were found to be in fair agreement with the curve values.

Performance of the Stilling Basin.—The performance of the stilling basin was satisfactory in every respect and, furthermore, it performed according to the predictions made from the model tests. A general view of the basin and

surrounding area is shown in Fig. 13 when, on April 17, 1950, the outflow was 58% of capacity.

Water leaving the tunnel appeared to be well aerated and at the approximate depth indicated in the model studies. The entire basin contained extremely turbulent water (Fig. 14) and was long enough so that the full jump height was attained before the flow entered the excavated channel. A considerable quantity of spray was thrown into the air at times where the outflow from the tunnel plunged beneath the tail water, but most of the spray fell back into the basin. The small quantity of spray that fell adjacent to the basin caused no difficulty. Much of the time the flow entered the basin smoothly. Flow leaving the basin had a relatively quiet water surface with

Fig. 13.—Outflow into River with Discharge of 3,250 Cu Ft Per Sec

few measurable waves. There were long-period swells, however, with a maximum height of from 12 in. to 18 in. which were caused by pulsations in the stilling basin. The disturbances below the stilling basin were similar to those noted during the model tests.

Water-surface profiles were measured in cubic feet per second, in the prototype for discharges of 3,700, 3,300, 2,350, and 1,050. These profiles are shown in Fig. 15 together with the profile obtained during the model tests for 5,600 cu ft per sec. Although no exact comparisons can be made, the prototype profiles seem to agree closely with the model profile. If differences do exist, they are probably caused by the greater air entrainment in the prototype —making the prototype profiles slightly higher than those in the model for the same discharge.

Erosion Downstream from the Stilling Basin.—Erosion tests in the model had indicated that the channel banks just downstream from the stilling basin would be subjected to greater erosion forces than the channel bottom and that rock riprap would be necessary in the prototype to prevent bank damage. The channel bottom was shown by the model tests to be relatively free from erosion tendencies, and no damaging erosion was expected there. As a precaution, however, because of the fine-textured friable material composing the channel, rock riprap was used in the prototype channel bottom. No riprap was used in the model tests.

Before the runoff in the spring of 1950, cross sections had been taken in the prototype channel on May 31, 1949. Following the 1950 runoff, cross sections were again taken on June 15, 1950. Cross sections for both dates at a station

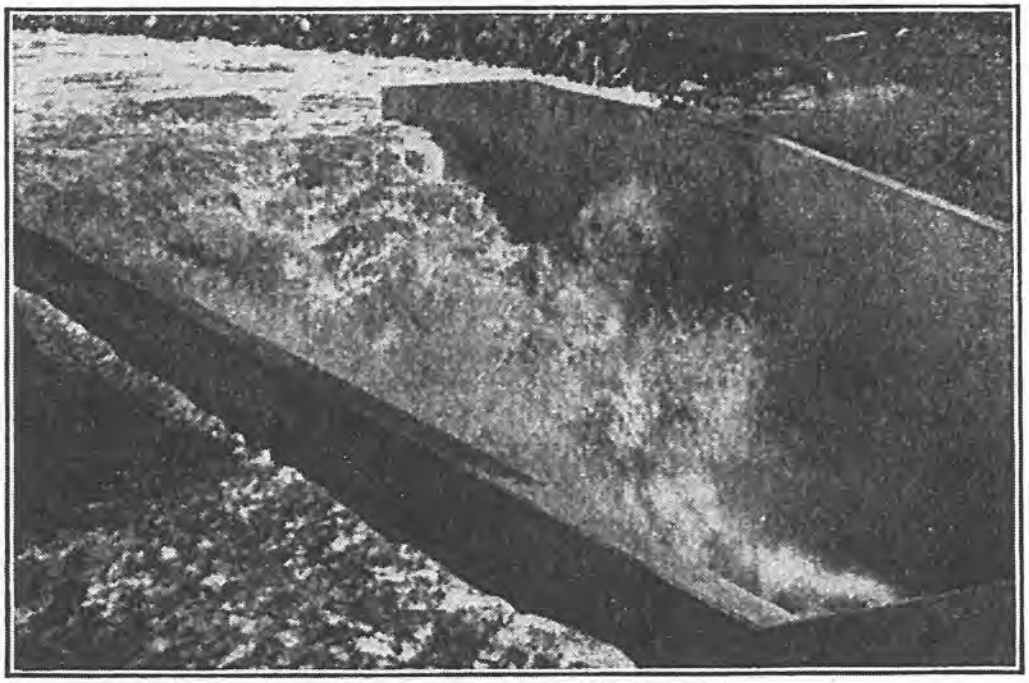

Fig. 14.—Hydraulic Jump in Stilling Basin

located just downstream from the end sill are shown in Fig. 16. These typical sections show the maximum erosion depth to be less than 12 in. Close to the end sill there is no significant erosion. Using all the cross sections taken (Figs. 16 and 17) computations made to determine the volume of material moved indicated that less than 20 cu yd of material was removed from the channel bottom during the entire runoff.

Conversely, the channel banks, despite their riprap cover, were eroded to a greater degree. The riprap, however, had been placed in a thin layer and was not well graded as to size; in places the earth banks could be seen between the individual rocks. Swells were observed to rise over local areas and penetrate very easily into the large voids. When the water receded some of the earth was removed from behind the riprap. This was evidenced by the darker,

earth-colored water which could be seen adjacent to the riprap. After several days of operation the riprap had slumped and the earth banks had caved. Despite the apparent damage to the banks, the riprap continued to provide protection against further cutting.

Damage to the bank was not caused primarily by waves of the ordinary variety as these were only a matter of inches in over-all height but rather by swells caused by surges in the hydraulic jump. The model stilling basin had been equipped with baffle piers and chute blocks to reduce the over-all length of the stilling basin and decrease its cost. It had been noted during these and other model tests that, when a hydraulic jump is reduced in length by the use of artificial devices such as baffle piers, the jump becomes more stable in most respects but exhibits a tendency to produce the swells previously noted. The swells are considered the lesser of the evils, however, and are not impossible

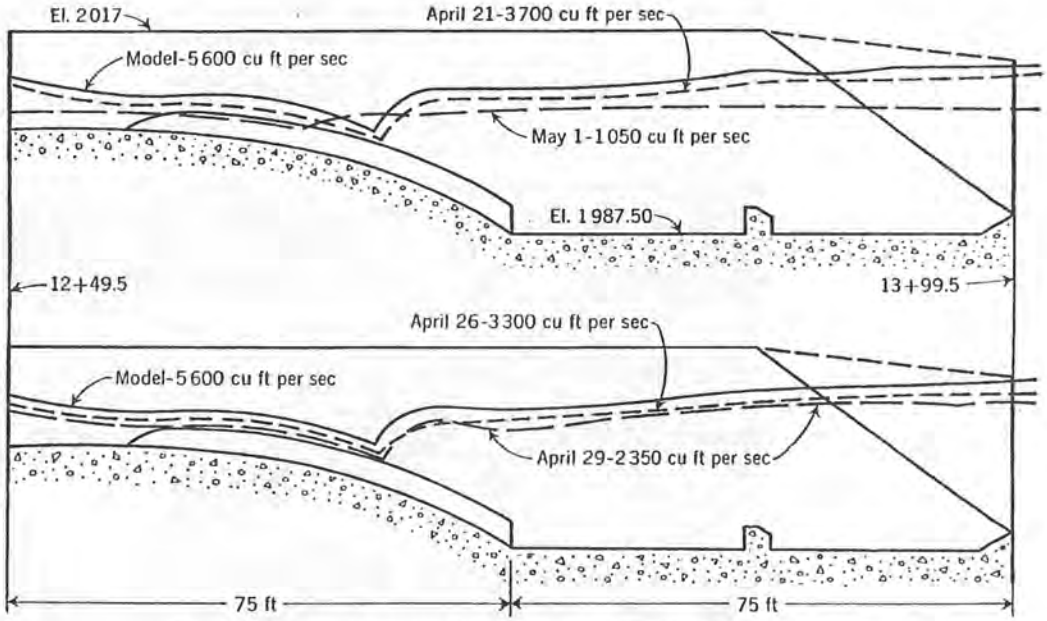

Fig. 15.—Model-Prototype Comparison of Stilling-Basin Profiles

to cope with. With a base layer of gravel and successive layers of larger and larger rock there probably would have been no damage.

Tailwater Elevations.—The topography in the model extended only a short distance downstream from the stilling basin into the excavated channel and did not include any part of the Heart River. Tailwater elevations were set by an adjustable tail gate located at the end of the model—using a computed curve, tailwater elevation versus discharge, for the Heart River. The excavated channel was designed so that the expected tailwater elevation would be essentially the same as that expected in the river channel. The tailwater curve used in the model tests and shown in Fig. 18 was computed for a point located 200 ft downstream from the axis of the dam in the Heart River.

During the prototype operation it was readily apparent to the unaided eye that the tailwater elevation in the river was considerably lower than that in

the excavated channel. Water entering the river from the channel had a steep surface slope and a much higher velocity than anticipated. Observations, however, were not sufficient to establish whether the tailwater in the channel was too high or that in the river too low. Consequently, levels were run to determine the tailwater elevation at four separated points for five different discharges. The location of these points and the tailwater elevation

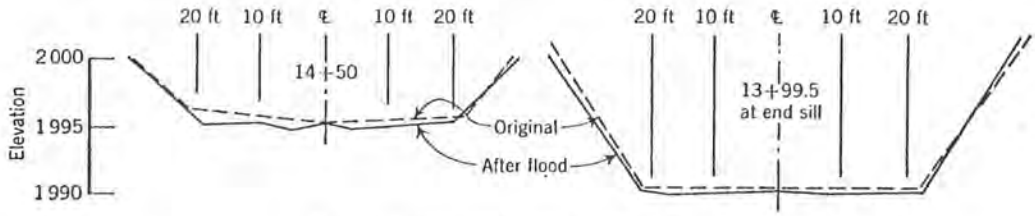

Fig. 16.—Erosion Below Stilling Basin

and discharge are shown in Fig. 18, plotted below the tailwater curve used in the model tests. These data show the computed tailwater curve to be 2.3 ft higher at 1,000 cu ft per sec and 4.1 ft higher at 3,600 cu ft per sec than the actual measured points in the Heart River. Tailwater elevations measured in the excavated channel more nearly coincided with the computed curve, but

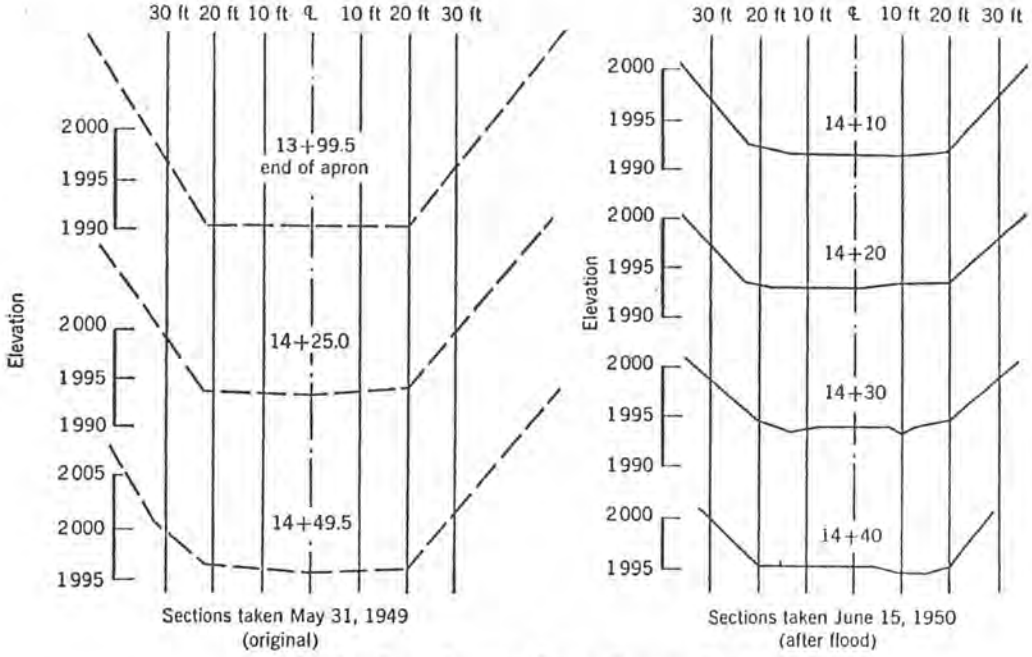

Fig. 17.—Cross Sections Below Stilling Basin

at 3,600 cu ft per sec the elevation at point C in Fig. 18 in a quiet area adjacent to the wing wall at the end of the apron was 1 ft below the computed curve. Elevations obtained from water-surface profiles taken along the basin center line agreed with the computed curve but only because they included the boil height at the end of the apron which was slightly higher than the adjacent tailwater.

The model stilling basin was tested to determine the reduction in tailwater possible before the jump was swept off the apron. In the model it was possible to lower the tailwater only from 3 ft to 4 ft before the jump was swept out for the maximum discharge of 5,600 cu ft per sec. As the tailwater elevation in the Heart River is 4.1 ft lower at a discharge of 3,600 cu ft per sec than the computed tailwater, it is imperative that the excavated channel be closely watched to prevent damage which might lower the tailwater to the level of the Heart River. If this should happen, the jump would undoubtedly sweep out and the apron would operate as a "flip bucket." Because the structure is not designed for this type of operation, damage could result.

Erosion in the Heart River.—The difference in water levels between the excavated channel and the river was the cause of the high-velocity flow enter-

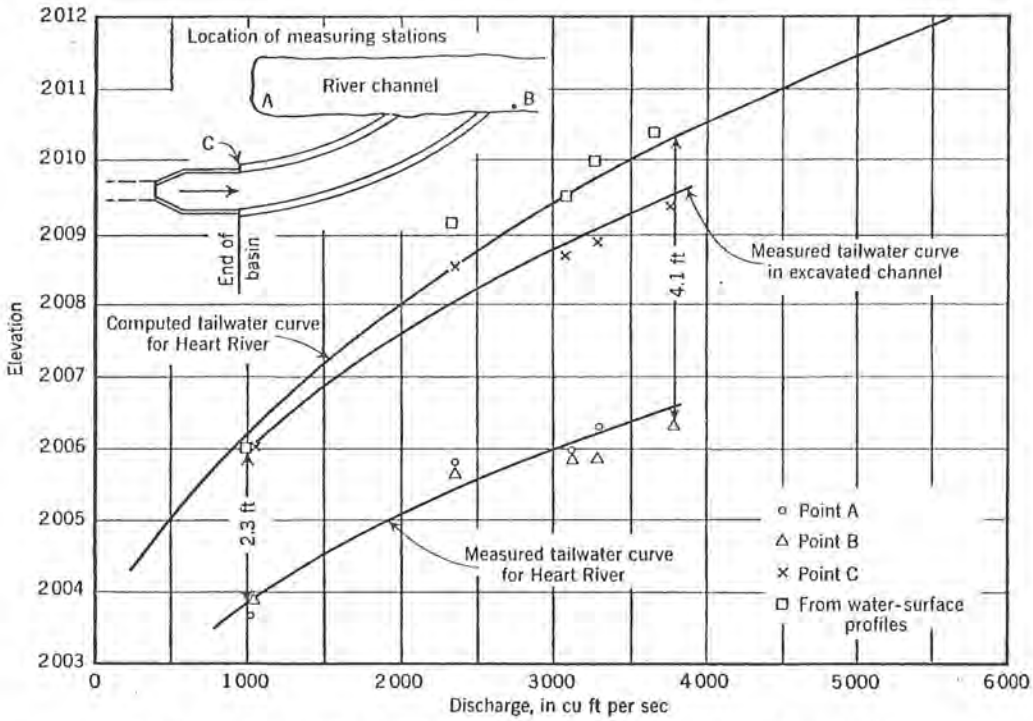

FIG. 18—COMPARISON OF MEASURED AND COMPUTED TAILWATER ELEVATION

ing the Heart River. Water leaving the stilling basin was of relatively low velocity and would not have caused ill effects as it entered the river. The 4-ft difference in elevation, however, caused an increase in velocity which proved to be sufficient to cause considerable damage to the unprotected downstream riverbank. Some damage was caused by the direct effects of the current flowing diagonally across the river and cutting into the far (left) bank. A great part of the damage, however, was caused by a large induced eddy in the river. This eddy caused an upstream current along the left bank which removed large quantities of material from areas considerably upstream of the point where the main flow impinged on the bank. Although the damage was considerable, it had no ill effects on the structure or its operation. Riprap placed in the eroded area will prove of value, however, as the damage will

become greater with each successive runoff and the end result is difficult to predict. A comparison of Figs. 13 and 19 shows the extent of the bank damage that occurred between the beginning of the runoff and May 5, 1950.

Inspection of Structure Following 1950 and 1951 Floods.—An inspection of the spillway conduit was made following the 1950 flood and again after the 1951 flood. Certain findings are of interest and are considered subsequently.

The conduit inspection in both instances revealed that the concrete was in excellent condition with the exception of four small areas located in the 90° bend. Following the 1950 flood, plaster casts were made of the two most prominent areas. The largest area is about the size of a man's hand and by actual measurement has a maximum depth of erosion of $\frac{3}{4}$ in. (Fig. 20). The

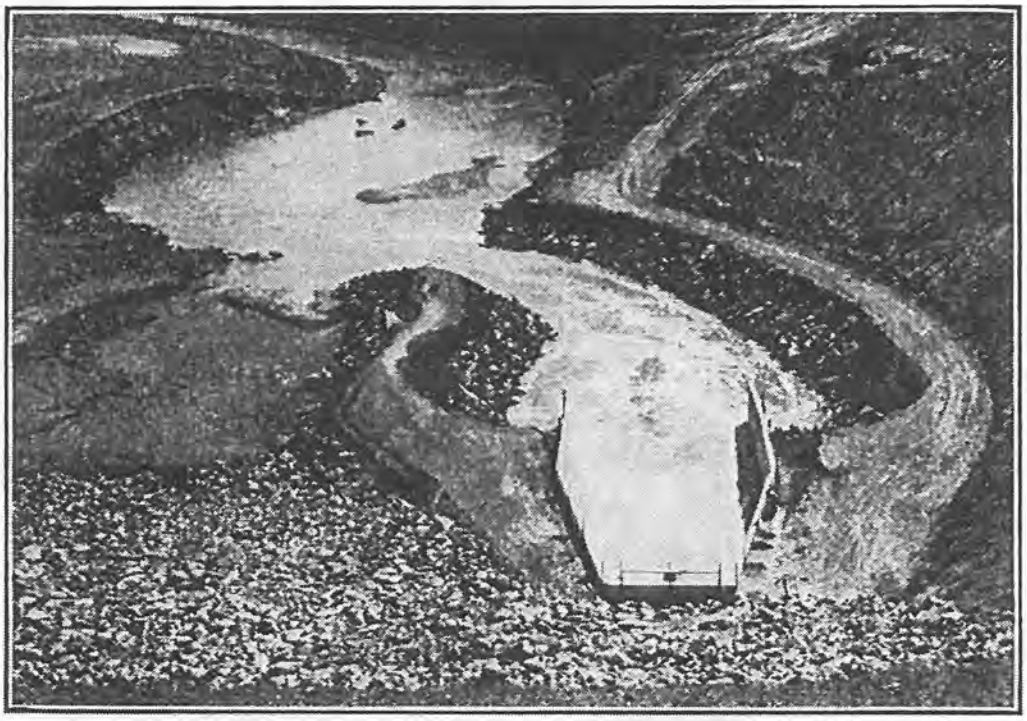

Fig. 19.—Downstream Bank Erosion After Passing of Flood

smaller area shows a maximum depth of $\frac{1}{2}$ in. The surface shown in Fig. 20 was molded in sponge rubber against the plaster casts made in the field and is therefore an exact replica of the tunnel surface following the 1950 flood.

The eroded areas are located near the invert and near the bottom of the 90° bend. Construction timbers or ice falling into the shaft could have caused the surface damage shown by impact. Persons who have viewed the rubber casts have unanimously been of the opinion that the damage was not begun by cavitation.

Following the 1951 flood, these areas were again inspected. There did not appear to have been any marked change in these areas as a result of the 1951 spring floods, and no repairs were believed to be necessary.

Inspection of the riprap downstream from the stilling basin following the 1950 flood indicated that repairs would be advisable. The slumped

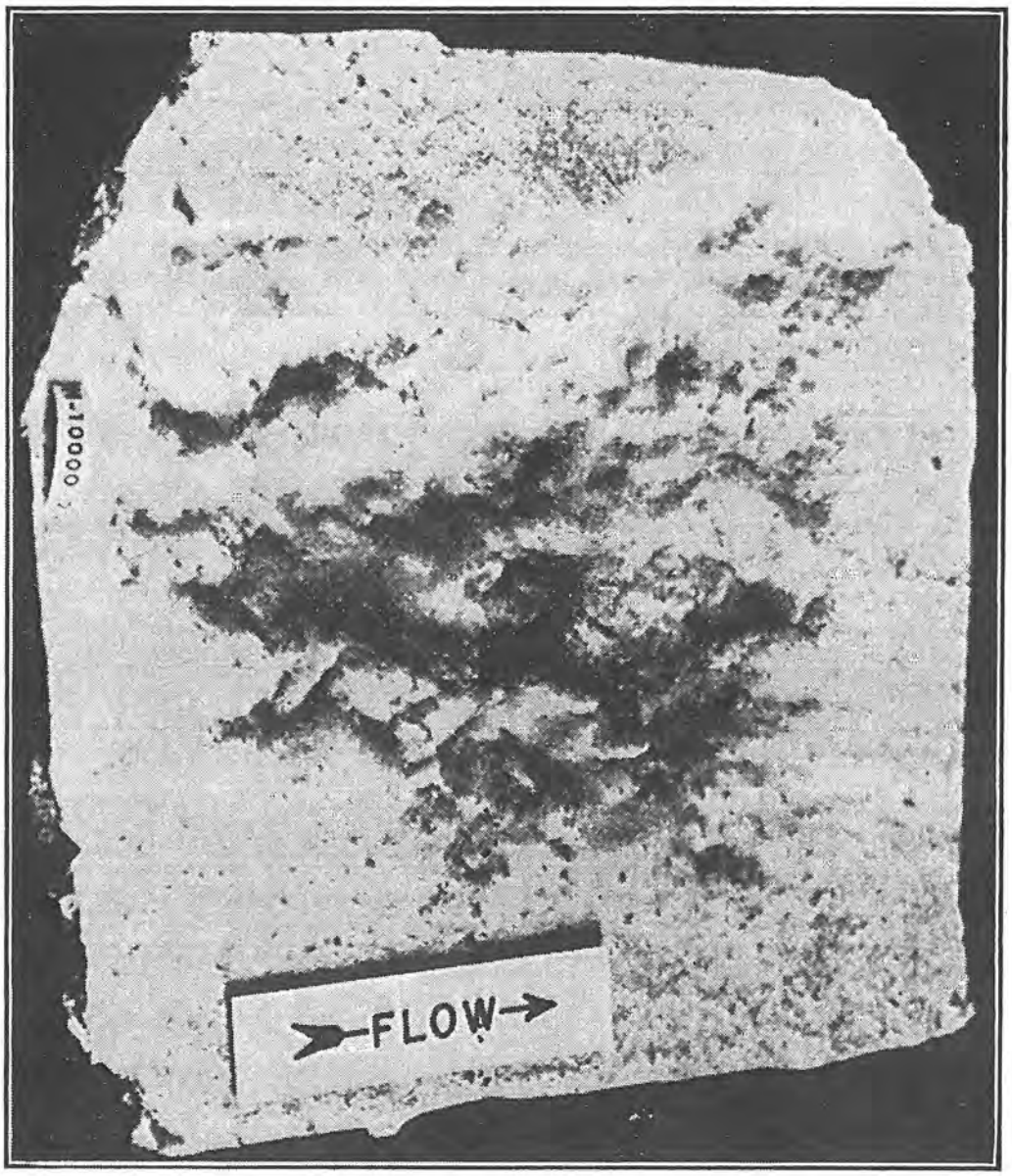

FIG. 20.—ERODED AREA IN BEND

riprap in the channel immediately downstream from the stilling-basin structure was repaired in May and June, 1950. Gravel backfill was placed on the slopes to bring them to grade, and rock was replaced over the gravel. The eroded section of riverbank just downstream from the end of the riprapped channel was sloped and covered with gravel and rock.

CONCLUSIONS

It is generally accepted that hydraulic models are useful as an aid in design and in predicting the general features of future prototype performance. The comparison of model and prototype performance made on the Heart

Butte morning-glory spillway supports this premise and in addition indicates that precise predictions of performance of untried or unusual features of a proposed structure are also possible.

Observations downstream from the structure showed that the computed and actual tailwater curves were quite different. To assure obtaining prototype performance equal to that predicted by the model, the curve should be determined with great care.

Observations of the prototype stilling basin indicated that the effect of insufflation of air caused only a reasonable increase in water-surface elevation in the basin, that splash was no greater than predicted by the model, and that, as expected, spray was more extensive. The basin performed in every way as predicted by the model.

The close agreement between model and prototype spillway-capacity curves, the similarity between submergence characteristics of the morning-glory spillways, the indications that vortex action was reduced by use of spillway piers, and the several other comparisons made suggest that a hydraulic model is indispensable in providing assurance that a proposed structure will give satisfactory performance at the lowest possible cost.

Acknowledgment

The 1950 runoff occurred without warning at a site located 700 miles from the Denver (Colo.) hydraulic laboratory of the Bureau of Reclamation, United States Department of the Interior (USBR). General flooding of a large area outside the area protected by the dam caused the road to the site to be flooded, and access to the project was difficult. Prototype test equipment was not available at the dam, and trained personnel were not available to make as many observations as might have been considered ideal. The USBR office in Bismarck did, however, perform an excellent job of supplying observers to record data during the runoff period. These observers supplied most of the data, photographs, and motion pictures of the spillway in operation. The Denver laboratory contributed to the program by outlining the tests to be made, supplying the equipment necessary to make measurements, and by collecting the data and making final comparisons. The USGS cooperated with the USBR Bismarck office in supplying men and equipment to make the river-gaging measurements.

The assistance of C. F. Burdg and B. L. Mendenhall in supplying observers and their wholehearted spirit of cooperation are acknowledged. W. J. Colson, Philip E. Ehrenhard, A. M. ASCE, and John Serungard assisted in obtaining photographs, motion pictures, and data.

DISCUSSION

FRED W. BLAISDELL,[3] M. ASCE.—This comparison of the model and prototype performance of a spillway and its stilling basin is extremely interesting. Confidence in the use of model studies for the experimental design of morning-glory spillways cannot help but be strengthened as a result of this paper. For several years the writer has been concerned with the performance of this general type of structure; a few comments will be made on some of the points cited by Mr. Peterka.

If the tunnel had been 11 ft in diameter instead of 14 ft, it seems likely that it could have been expected to flow full instead of unexpectedly filling when the deflector was not used. It is implied in Fig. 1 that the tunnel dimensions were fixed by the diversion requirements—the tunnel subsequently being adapted for spillway use. This would, of course, have limited the laboratory staff in recommending changes in the tunnel size. The use of the deflector at the base of the vertical shaft provides a good solution to the problem as it exists. It also provides a definite point for the computation of the head on the spillway for the submerged condition. It is apparent from Mr. Peterka's comments that this point would have been difficult to determine accurately with the tunnel partly full and would have shifted from the vertical bend to the tunnel exit at times if the deflector had not been utilized.

It is the writer's experience that the use of some type of antivortex device is an absolute necessity if the spillway is to operate submerged. The antivortex device can be the pier type used on the Heart Butte Dam spillway, although other types are also effective. For other types of spillway entrance, such as a uniformly sized pipe on a small spillway, the antivortex piers might have to be somewhat higher than those at the Heart Butte Dam to prevent vortex formation.

Mr. Peterka notes that no spray was observed to emerge from the morning-glory hole. This may be because the tunnel outlet is not submerged; if the outlet were submerged, air could accumulate in the tunnel and eventually blow back through the inlet or be discharged violently through the outlet.

From Fig. 4, it appears that the tunnel flows about half full. If the tunnel had been full it would have been necessary to include conical fillets in the upper half of the tunnel exit as well as in the lower half.

It seems likely that the side-wall flare could have been begun at the upstream end of the transition, resulting in some shortening of the outlet. In this case the fillets would be segments of oblique cones rather than the segments of right cones used at Heart Butte. This arrangement has been used successfully by the writer.

The side-wall flare seems quite rapid—in fact, it is about twice the flare the writer would have thought acceptable.[4] One reason it is acceptable at Heart

[3] Project Supervisor, Agri. Research Service, U. S. Dept. of Agriculture, St. Anthony Falls Hydr. Lab., Minneapolis, Minn.

[4] "Flow Through Diverging Open-Channel Transitions at Supercritical Velocities," by Fred W. Blaisdell, SCS-TP-76, Soil Conservation Service, U.S. Dept. of Agriculture, Washington, D. C., April, 1949.

Butte is undoubtedly a result of the use of guide walls. This side-wall flare should not be used in other installations unless model tests are made to check the design.

A horizontal floor has also been used by the writer to help spread the flow. It is pressure on the floor that spreads the water, and there can be no pressure on the floor if the floor profile has the same shape as the trajectory of the free-falling stream. Therefore, there will be no pressure on the floor if the flow enters the trajectory curve at the point where the side-wall flare begins. Consequently, there can be no spreading unless a flat floor, similar to that at Heart Butte, is used.

The writer and his associates have checked the comment under the heading, "Model-Prototype Comparison Tests: Erosion Downstream from the Stilling Basin," that erosion is less severe on the channel bed than on the channel banks; this condition involves, of course, a well-designed stilling basin. It has also been found that a flaring wingwall, triangular in elevation, provides sufficient protection so that sand in back of the model wingwalls stands at its angle of repose. There is usually a local widening of the downstream channel near the stilling basin. Ordinarily it is felt that this widening can be tolerated and that riprap protection is not economically warranted. However, wave wash or beaching, mentioned by Mr. Peterka, is a problem, and some bank protection may be required in the vicinity of the water surface. Wave wash was apparently the major damage observed at Heart Butte, although there it was unsightly rather than dangerous to the safety of the structure.

One wonders, when the model tests have shown that no damaging erosion will occur in the channel bed, why riprap is used there. Is it a practice carried over from the time when less efficient stilling basins made the riprap necessary? If so, it is a wasteful practice.

The necessity for the best possible determination of the tailwater elevation is vividly brought out by Mr. Peterka; this elevation determines the elevation of the stilling-basin floor and assures the satisfactory performance of the stilling basin. The comments by Mr. Peterka relative to the large differences between the computed and observed tailwater elevations in the Heart River might be helpful to others faced with similar problems.

Frank evaluations such as are presented in the paper appear all too seldom despite their great value in engendering confidence in the good points of a design or design method and pointing out pitfalls to be avoided.

ALVIN J. PETERKA,[5] M. ASCE.—The comment by Mr. Blaisdell that confidence "in the use of model studies * * * cannot help but be strengthened" is of interest because similar tests on a companion structure, the Shade Hill Dam (South Dakota) morning-glory spillway, have been made since the paper was written (and are reported in this Symposium). Of particular interest in these tests[6] was the agreement between model and prototype discharges. A

[5] Hydr. Engr., Bureau of Reclamation, U. S. Dept. of the Interior, Denver, Colo.

[6] "Spillway Tests Confirm Model Prototype Conformance," by A. J. Peterka, *Engineering Monograph No. 16*, Bureau of Reclamation, U. S. Dept. of the Interior, Denver, Colo., October, 1954.

graph containing twelve instead of four field measurements showed remarkable agreement with Fig. 9. The average variation between model and prototype discharges was 2.7%, with maximum and minimum variations of 5.0% and 0.2%, respectively. These results strengthen the conclusion that the Heart Butte spillway model rating curve is accurate.

Other comments by Mr. Blaisdell provide an opportunity to emphasize certain points which were not fully explained. In regard to the filling of the tunnel during the model tests, it should be made clear that the tunnel size was fixed before the model tests were begun. Consequently, no attempts were made to reduce the tunnel diameter during the tests. As Mr. Blaisdell notes, the use of a deflector at the base of the shaft, in addition to preventing filling of the horizontal tunnel, is a valuable addition to a structure of this type. The stabilizing effect of the deflector on both partial and maximum flows provides smoothness in operation which under most circumstances allows reduction in the tunnel diameter with an accompanying reduction in construction cost. The establishment of a positive control point should be the first consideration in the design of any hydraulic structure.

The use of spillway piers is discussed by Mr. Blaisdell; he states that other antivortex devices are also effective. The writer has been intimately connected with the hydraulic model tests on the Pleasant Hill (Ohio), Watuaga (Tennessee), South Holston (Tennessee), Heart Butte, Shade Hill, and Hungry Horse (Montana) morning-glory spillways and has firsthand knowledge of the tests on the Owyhee (Idaho) and Gibson (Montana) dams. In each case various other types of antivortex devices were tested, but spillway piers proved to be most effective even though in some cases prototype piers were not constructed. Because many other morning-glory spillways make use of piers in various shapes and forms it is the writer's opinion that spillway piers, in some form, offer the only known economical and practical solution to the vortex problem. In addition, piers often serve a second purpose as flow guides in unsymmetrical approaches when the spillway is discharging freely.

The spray above a morning-glory spillway in operation is, as Mr. Blaisdell notes, usually caused by the outlet being submerged to some degree. Spray may also be seen, however, when the outlet is free. Spray is sometimes caused by a ragged flow surface in the upper part of a spillway being torn apart by an updraft in the tunnel. At times tunnel spillways act as chimneys, producig an upward draft of air. At low spillway discharges or when the spillway first begins to operate, the air velocity is often sufficient to produce spray above the spillway.

The comments by Mr. Blaisdell on the stilling-basin side-wall flare are entirely correct. No attempt should be made to use such rapidly flaring walls without guide walls or other flow-spreading devices.

Mr. Blaisdell questions the use of riprap on the prototype channel bottom when the model tests show that serious erosion will not occur. . There are two reasons for this use: First, the prototype channel consisted of very fine material having little if any more resistance to erosion than the sand used in the model.

With the greater forces in the prototype acting on a much lighter (considering the scale) material, it was feared that deeper erosion might occur in the prototype than was predicted by the model. As assurance against making expensive underwater repairs, riprap was recommended for use on the channel bottom. A second reason was the possibility of degradation of the channel bed. Experience has shown that clear water picks up fine material on entering the river channel. Degradation of this type has been found to be, in certain cases, as serious as erosion. It is hoped that the riprap will reduce channel degradation close to the structure.