TECHNICAL SERVICE CENTER
Denver, Colorado

Hydroelectric Research and Technical Services Group

Project Notes 8450-98-01

AIR CONCENTRATION METER ELECTRONICS PACKAGE MANUAL

Prepared by

M. L. Jacobs

U.S. Department of the Interior
Bureau of Reclamation

October 1997

Project Notes 8450-98-01

AIR CONCENTRATION METER ELECTRONICS PACKAGE MANUAL

M. L. Jacobs

Hydroelectric Research and Technical Services Group
Technical Service Center
U.S. Bureau of Reclamation
Denver, Colorado

October 1997

ABSTRACT

The Electric Power and Diagnostics Team of the Hydroelectric Research and Technical Services Group (D-8450) has developed an improved Air Concentration Meter electronics package that, in conjunction with a probe developed by the Water Resources Research Laboratory (D-8560), can measure the percentage of entrained air in flowing water. This document is both the user and technical manual for the electronics package component of the Air Concentration Meter.

DISCLAIMER

This written matter consists of both the user and technical manual for the electronics package component of the Air Concentration meter. The information, ideas, and concepts presented are those of the authors and do not necessarily represent the views of the U.S. Government or the Bureau of Reclamation. Use of this material as part of or in support of advertising for referenced products is forbidden.

INTRODUCTION

It is sometimes necessary to know the amount of air entrained in flowing water. One example would be the case of water flowing over a stepped dam face for the purpose of examining the energy dissipation capability of the face design. While the theory for making air concentration measurements has remained essentially unchanged for well over 50 years, improvements in technology have made it possible to replace what was originally a large, heavy, temperamental, drift-prone vacuum-tube instrument with a modern solid-state, stable, digital readout device that can compensate for a number of effects that were not known when the original instrument was designed. The result is much more accuracy and repeatability in the air concentration measurements. This manual covers both theory and operation of both the isolated output and non-isolated output versions of the Air Concentration Meter (ACM).

CONCLUSIONS

The Electric Power and Diagnostics Team of the Hydroelectric Research and Technical Services Group (D-8450) has developed an improved electronic Air Concentration Meter that, in conjunction with a probe developed by the Water Resources Research Laboratory (D-8560), can measure the percentage of entrained air in flowing water. Improvements over previous devices include increased stability, increased accuracy, digital readout, compensation for source-variable water conductivity, compensation for environmentally caused anti-plating current imbalance, an optically-isolated water/air pulse-stream data output, and a small, battery-powered, hand-held package.

AIR CONCENTRATION METER OPERATION

ACM operation is divided into three phases: 1) Balancing the probe Anti-Plating current for the characteristics of the water being tested, 2) adjusting the gain for the conductivity of the water being tested, and 3) measuring the air concentration. Phases 1) and 2) are slightly interdependent.

The ISOLATED POWER switch should be OFF unless the isolated output is being used.

Connect the probe to the PROBE IN connector. Turn the MAIN POWER switch ON. Place the BALANCE/OPERATE switch in the BALANCE position. Dip the probe into a non-flowing sample of the water to be tested. Adjust the CONDUCTIVITY ADJUST control until the meter reads approximately 50. If the Anti-Plating current is not balanced, the meter will read differently for the two halves of the anti-plating cycle, and one of the red light emitting diodes (LEDs) above the BALANCE ADJUST control will be lit. Above each LED is a direction indicator: CW (clockwise), or CCW (counter-clockwise). Slowly turn the BALANCE ADJUST control in the direction indicated above the lit LED until the light goes out. For instance, if the CW LED is lit, turn the BALANCE ADJUST control clockwise. If the CCW LED is lit, turn the BALANCE ADJUST control counter-clockwise.

Because both half-cycles of the probe anti-plating current must be sampled and stored before the state of balance can be determined, the control must be adjusted only slightly, with a 3- to 5-second delay between adjustments. When both LEDs remain off after this waiting period, the anti-plating current is in balance for the sample of water being tested. The lock on the BALANCE ADJUST control may then be engaged to prevent movement of this control while the air concentration is being measured. (Note: This balance procedure compensates only for the zero- flow-induced probe voltage. It is possible for a large flow-induced imbalance to exceed the internal electronic water/air threshold. If this happens the air concentration reading on the meter will be in error. With experience, the operator can adjust the BALANCE ADJUST and CONDUCTIVITY ADJUST controls to overcome this difficulty.)

If necessary, readjust the CONDUCTIVITY ADJUST control until the meter reads 50.

Place the BALANCE/OPERATE switch in the OPERATE position. Place the probe into the water where the air concentration is to be measured. If the water is flowing, orient the probe so that the probe tip is facing upstream. After a few seconds the meter will stabilize at a number representing the percentage air concentration. Find the displayed number on the supplied calibration curve. Read the actual air concentration from the curve.

If either power indicator fails to light when the respective power switch is placed in the ON position, either the respective batteries are missing, or need to be replaced.

ELECTRONICS CALIBRATION CHECK AND CALIBRATION PROCEDURE

The calibration procedure given in this section is for the ACM electronics only. This procedure does not calibrate the probe/meter combination. That calibration must be performed in a laboratory equipped to provide flowing water with an adjustable known percentage of air entrainment.

Connect a probe to the PROBE IN jack. Place the probe in a source of stationary water with no air bubbles. Adjust the ACM for the water conductivity and anti-plating balance as described in the section AIR CONCENTRATION METER OPERATION. Place the BALANCE/OPERATE switch in the operate position. With the probe in still water the meter should read zero. If the meter does not read zero, the ACM is malfunctioning and cannot be calibrated. If the meter reads zero, remove the probe from the water. Wait 1 minute for the meter to stabilize. The meter should read 100. If the meter does not read 100, adjust the METER CALIBRATE potentiometer, R25, until the meter reads 100. The ACM electronics is now calibrated.

The calibration check may easily be performed as part of the anti-plating current and water conductivity adjustments with the addition of only the 1-minute stabilization time. The ACM electronics should be calibrated when the calibration check shows that the ACM is not correctly calibrated. Because of the high-stability components used in the ACM, calibration should be required only rarely.

THEORY OF OPERATION

The ACM is designed to measure the percentage of air entrained in flowing water. Entrained air is not dissolved, and is in the form of bubbles which are carried downstream by the flow. The ACM detects these bubbles by passing a current through the water via a probe placed in the flow, and measuring the change in conductivity that takes place when a bubble of air impinges on the probe tip. This conductivity change is a step change from relatively high conductivity with the probe in water to nearly zero conductivity when a bubble breaks the conducting path. By measuring the ratio of the time the conductivity is low to the time the conductivity is high, the percentage of air in the flow may be determined.

BLOCK DIAGRAM

Figure 1 shows a functional block diagram of the ACM. An Anti-Plating Oscillator supplies a square wave voltage to the Anti-Plating Balance and Offset Adjustment circuits as well as the Anti-Plating Measuring circuit. The anti-plating signal is applied to the probe. The signal from

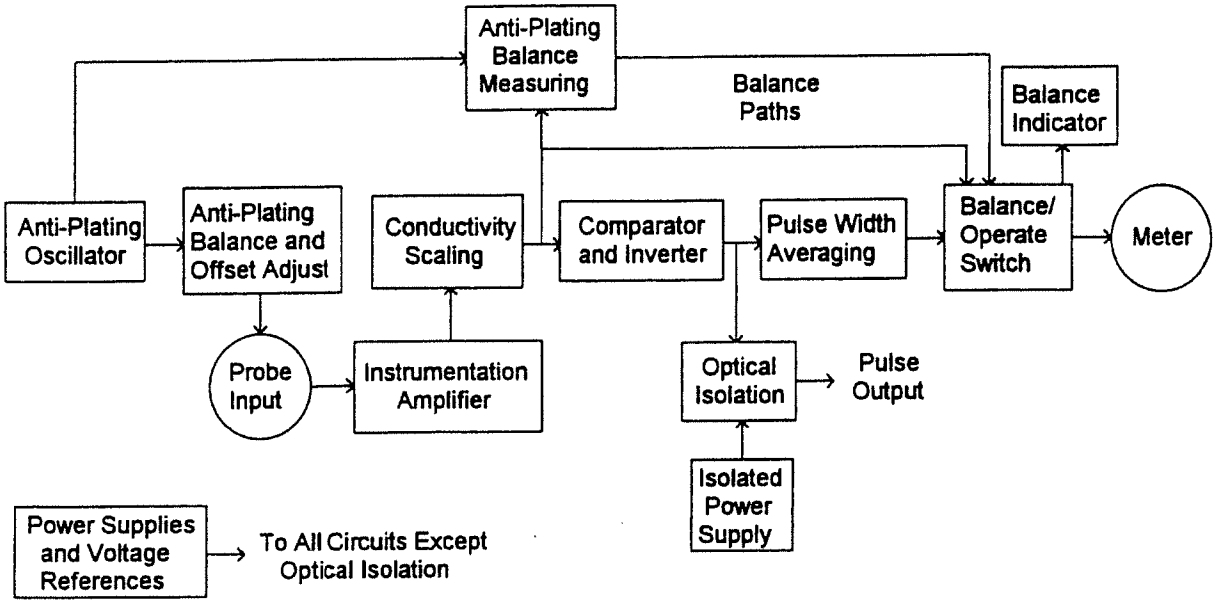

ACM Block Diagram

Figure 1

the probe is amplified and scaled to the proper level. The bubbles are detected and the resulting pulse train inverted. This signal is isolated by the Optical Isolation circuit and made available for further processing. The inverted pulse train is converted to a dc voltage that slowly varies as the air concentration changes. When the BALANCE/OPERATE switch is in the operate position this dc voltage is applied to a digital metering circuit where the approximate air percentage may be read on the meter. The number from the meter, in conjunction with a calibration curve for the specific probe being used, can be used to find the actual percentage of air in the water flow.

While the ACM is being balanced, the signal at the output of the Conductivity Scaling circuit is a dc voltage. This voltage is applied to the Anti-Plating Balance Measuring circuit. This circuit uses the outputs from the Anti-Plating Oscillator and the Conductivity Scaling circuits to determine whether the anti-plating signal is properly balanced. If the balance is not correct, this circuit provides a visual indication of the fact of imbalance and the direction the balance control must be turned to bring the ACM into balance. Also, during the balance phase, the conductivity voltage is applied to the meter so that the conductivity scaling can be properly adjusted.

DETAILED CIRCUIT DESCRIPTION
(See Schematic Diagram ACM-02)

Anti-Plating

The anti-plating signal ensures that the average current through the probe tip is zero, so that minerals dissolved in the water will not electroplate onto the probe tip. Any material plated during the first half of the anti-plating cycle is returned to solution during the second half of the cycle.

Anti-Plating Waveform Generation

Integrated circuit (IC) timer U1, resistor R1, and capacitor C1 form a square-wave oscillator with a period of 2 seconds. The waveform at test point TP1 is shown in figure 2.

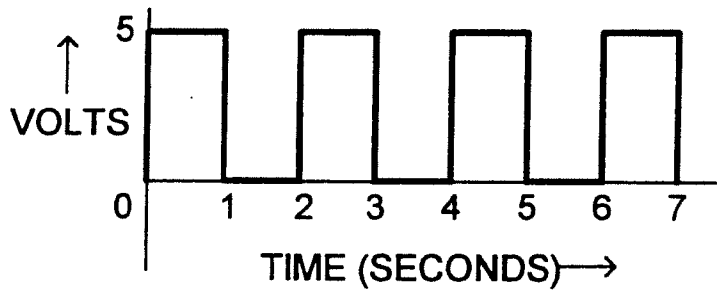

Anti-Plating Oscillator Waveform

Figure 2

Operational amplifier (Op Amp) U2:B; resistors R2, R4, R5; and anti-plating balance potentiometer R3 scale and offset the signal from U1 to provide the anti-plating signal at test point TP2 (Figure 3). This signal is applied to the probe through resistors R6, R7, R8, and the

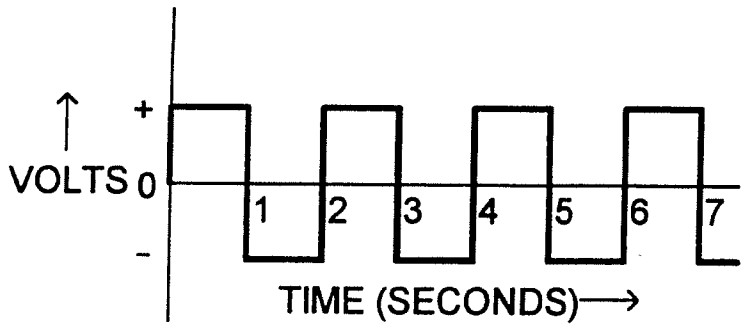

Symmetrical Anti-Plating Voltage Waveform

Figure 3

bridge consisting of diodes D1-D4. Anti-plating balance potentiometer R3 allows the user to adjust the anti-plating current symmetry to compensate for any offset that may exist due to water/probe interactions.

Probe Operation

Figure 4 shows a conceptual drawing of an ACM probe. The probe consists of two electrodes: The first is a small circular opening at the narrow end of the body of the probe. This electrode is usually physically part of the handle structure. The second electrode is a very thin wire that is centered in the circle formed by the first electrode. When the probe is inserted into still water, the water will form a conducting path between the two electrodes. If a bubble of air impinges on the probe, the conducting path will be broken.

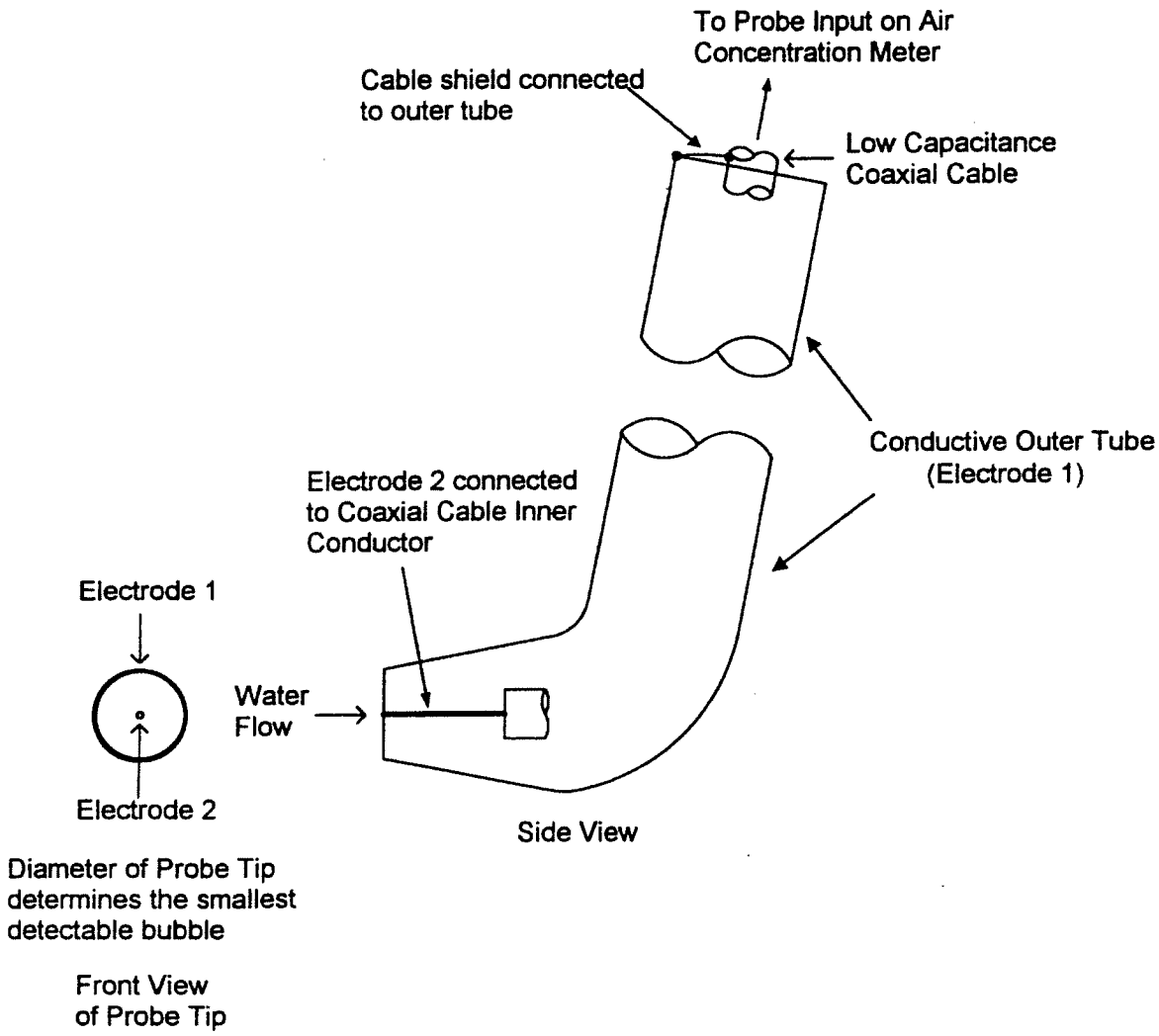

Air Concentration Meter Probe

Figure 4

When the probe is in air the voltage at the probe input will be the same as the anti-plating waveform at TP2, and no current will flow through resistor R8. Therefore, no voltage will appear across R8. The voltage at the output of instrumentation amplifier U3 (test point TP5) will also be zero. If the probe is in still water with no air bubbles, the voltage at the probe input will be less than that at TP2, and will depend on the conductivity of the water. The current in the water is limited by the voltage at TP2, the sum of the resistance of R6, R7, R8, and the effective resistance of the water. High water conductivity (small water resistance) results in a small voltage at the probe tip, and a relatively large probe current, while low water conductivity (high water resistance) results in a relatively large voltage at the probe tip, and a small current. The voltage developed across R8 will therefore vary from large to small as the conductivity of the water varies from large to small.

Because of the rectifying action of the D1-D4 bridge, even though the current in the water reverses direction every half-cycle, the current will flow in only the TP4 to TP3 direction through R8. Diode D5 clamps the voltage to about 0.7 volt, which allows U3 to avoid becoming saturated with a much larger gain (which is set by resistor R9) than would be possible without a clamping diode. This arrangement allows the instrument to operate over a much wider range of water conductivities than would otherwise be possible.

If R3 is correctly adjusted, the current through R8 will be identical on both half-cycles of the anti-plating waveform. Therefore, a constant dc voltage will appear across R8, except for the very small time interval (several tens of microseconds) when the anti-plating waveform is reversing polarity. During this interval, the voltage across R8 will drop to zero. Because this switching interval is very small compared to the anti-plating period, the voltage at R8 can be considered to be a constant dc voltage the magnitude of which is directly related to the water conductivity. The voltage at TP5 will therefore be a dc voltage that varies in magnitude from zero if the probe is in air, to some non-zero positive value which depends on the water conductivity. The higher the water conductivity, the larger the voltage at TP5.

Conductivity Scaling

Op amp U4:C; resistors R12, R14, R43, R44; potentiometer R13; and CONDUCTIVITY RANGE SELECT switch S3 control the conductivity scaling. The scaling is performed with the probe tip placed in a non-flowing sample of the water being tested. As the conductivity of the water decreases, the voltage at TP5 decreases. By selecting a range with S3, and adjusting the gain with R13, the voltage at TP6 can be adjusted. This voltage is scaled by the voltage division action of resistors R17 and R18, and read on digital panel meter M1 when switch S1 is in the BALANCE position. Theoretically, the scaling is properly set when the meter reads 50. Comparator U5 has a threshold voltage of about 4.5 volts set by resistors R15 and R16. At lower water conductivities, the gain of U4:C can be quite large, which means small dynamic changes in the effective conductivity of the flowing water under test can result in incorrect state changes at test point TP7, the output of U5. It may be necessary to adjust R13 so that the meter reads

slightly higher than nominal (up to perhaps 60) to minimize this effect. Some experience is necessary for best results.

Detecting Air in Flowing Water

When there is no air in the flowing water under test, the voltage at TP6 will nominally be constant, at a value just above the tripping threshold of U5. Therefore, the voltage at TP7 will be high (~5 volts). Inverters U6:D and U6:E invert this voltage, so the voltages at the output of these inverters and test point TP8 are low (zero volts). If an air bubble impinges on the probe tip, the voltage at TP6 will drop to zero, and the voltage at TP7 will go low, and the voltages at TP8 and the output of U6:E (pin 12 of U6) will go high. Consequently, as the bubbles pass over the probe tip, the voltages at TP8 and pin 12 of U6 will be switching from low to high at a rate determined by the concentration of air in the water. The signals at TP8 and pin 12 of U6 will therefore be a stream of pulses of constant height, and variable width, which depends on the water flow rate and air concentration. The ratio of air to water is approximately given by the duty cycle (the ratio of high to low time) of the pulses at TP8.

Digital Output

A. *Onboard Isolated Output*

The pulse stream at pin 12 of U6:E is applied to the input LED of optical coupler U16 through current-limiting resistor R20. The electrical pulse stream is therefore converted to an optical pulse stream inside U16. This optical pulse stream crosses a transparent isolation barrier and impinges on the optical receiving circuit inside U16, where the pulses are converted back into electrical pulses at pin 7 of U16. These pulses are applied to the isolated output, J3, through resistor R43. Tranzorb D12 protects against transient voltages that might be applied to the ACM through J3. To achieve isolation, the optical coupler output circuitry is powered from a separate 5-V power supply that is energized from a 9-V battery that is electrically isolated from the rest of the ACM

B. *Non-Isolated Output* (see schematic ACM-01)

The pulse stream from U6:E is applied to J3 through resistor R20, which limits the output current and serves to protect the ACM electronics from transients that might be picked up at J3.

C. *Outboard Isolator* (see schematic OI-01)

The pulse stream from J3 of the non-isolated digital output of the ACM is applied through a cable to J3 of the Outboard Isolator. Resistor R1 limits the input current to optical isolator U1. The isolator output is applied to J4 through resistor R2. Tranzorb D1 protects against transient voltages that might be applied to the isolator through J4. Battery B1 supplies power to U1 through ON/OFF switch S1 and voltage regulator U2. Integrated circuit U3 and resistor R3

deliver a constant current to Zener Diode D1 and power indicator LED D2. If the battery voltage is too low, D1 will not conduct and D2 will not light. If the power indicator does not light when S1 is switched ON, either there is no battery in the isolator, or the battery needs to be replaced.

Converting the Pulse Stream to an Analog Voltage

Resistors R21 and R22; capacitors C2 and C3; and op-amp U4:D form a low-pass filter with a cutoff frequency of approximately 0.1 Hz. The output of this filter, test point TP9, is a slowly-varying dc voltage that approximately represents the 10-second moving-average air concentration in the water.

Measurement Circuit

Resistors R23 and R24; potentiometer R25; BALANCE/OPERATE switch S1:1; and meter M1 make up the measurement circuit. Resistors R23-R25 form a voltage divider which scales the voltage at TP9 to the proper range for meter M1. Potentiometer R25 is adjusted to calibrate the ACM electronics. Because of non-linearity in the probe operation, especially at very low or very high air concentrations, the probe/meter combination must be calibrated as a single unit and a conversion curve plotted which converts the meter reading to the actual percentage of air. This requirement means that probes are not interchangeable, though individual calibration curves can be made for any ACM/probe combination.

Anti-Plating Balance Indicator Circuit

Several not-well-understood physical phenomena involving probe-tip material, probe orientation, and possibly other effects, result in an offset in the anti-plating current applied to the probe. The magnitude of this offset varies for each change in the above variables. Consequently, a non-adjustable anti-plating circuit designed around a symmetrical anti-plating voltage applied to the probe tip will usually not result in symmetrical anti-plating currents. The Anti-Plating Balance Indicator circuit was designed so that the ACM user can adjust the anti-plating currents under actual field operating conditions.

Sheet 2 of schematic diagram ACM-02 contains the anti-plating balance indicator circuit. The inputs to this circuit come from the output of the anti-plating oscillator (TP1), and the output of the conductivity scaling amplifier, TP6. On sheet 2 of ACM-02, the anti-plating oscillator signal is labeled "A". Integrated circuits U7 and U8 are Dual Precision Monostable Multivibrator (often called "One Shot") circuits. Resistor R26 and capacitor C4, resistor R27 and capacitor C5, resistor R28 and capacitor C6, and resistor R29 and capacitor C7 control the timing of U7:A, U7:B, U8:A, and U8:B respectively. Figure 5 shows the timing diagram for this circuit.

A One-Shot is a circuit the output of which is low until it receives a trigger signal. When the trigger signal is received, the output goes high, where it remains for a time that is controlled by

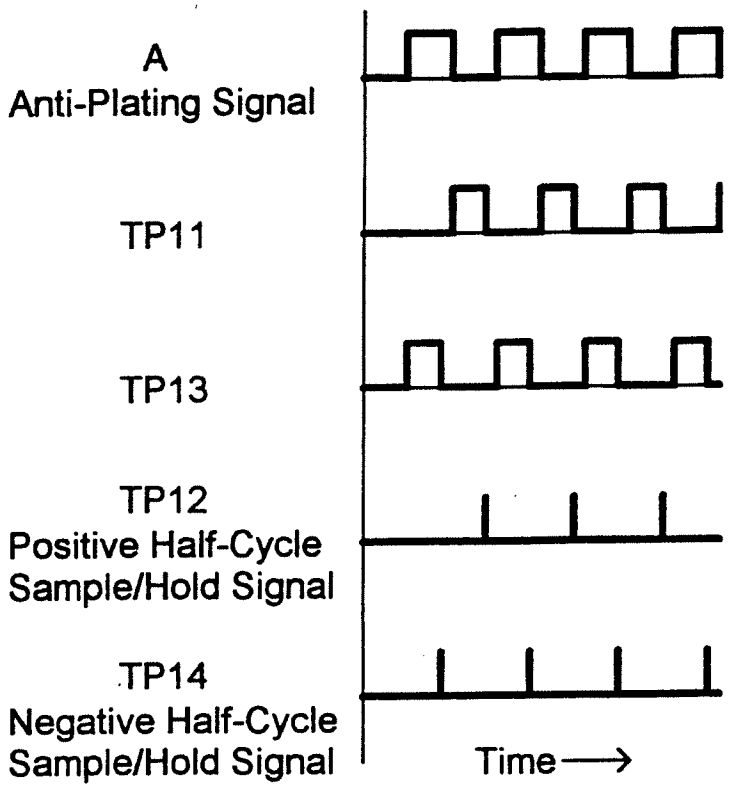

Anti-Plating Balance Timing Diagram

Figure 5

the timing components, in this case a single resistor and capacitor. At the end of the timing interval, the output again goes low, where it stays until another trigger signal is received.

In the ACM, U7:A is triggered by the falling edge of the anti-plating signal, while U8:A is triggered by the rising edge of the same signal. Therefore, U7:A and U8:A are triggered on alternate half-cycles of the anti-plating signal. When triggered, the outputs of both U7:A and U8:A go high for approximately 0.75 second. One-shots U7:B and U8:B are triggered by the falling edge of the signals from U7:A and U8:A respectively. The output times for U7:B and U8:B are approximately 0.1 second. Therefore, the signals at test points TP12 and TP14 are pulses of 0.1 second duration that recur every 2 seconds. However, the two pulses are offset from each other by 1 second.

The pulses from U7:B and U8:B are applied to the Sample/Hold (S/H) inputs of S/H buffers U9 and U10 respectively. Capacitors C8 and C9 are the respective hold capacitors for U9 and U10. The signal from the conductivity scaling amplifier (U4:C) is applied to the signal inputs of both U9 and U10. When the S/H inputs are high, the signal from U4:C is sampled and appears at the output of the buffers. When the S/H inputs are low, the outputs of the buffers are held at the

value they had at the time the S/H inputs went low. The result is that, during the balancing operation, the outputs of U8 and U9 store the voltages representing the alternate half-cycles of anti-plating current. These voltages are alternately updated every 2 seconds.

Resistors R30-R33 and operational amplifier U11 form a difference amplifier. If the ACM is perfectly balanced, the output of U11 (test point TP17) will be zero volts. If there is an imbalance, it will show up as either a positive or negative voltage at TP17. The larger the imbalance, the larger in magnitude the voltage. When S1 is in the OPERATE position, this voltage is not applied to any other part of the ACM circuitry. When S1 is in the BALANCE position the voltage is applied to the balance indicating circuit.

The balance indication circuit consists of resistors R34-R39, R45, operational amplifiers U4:A and U4:B, and LEDs D6 and D7. Op amps U4:A and U4:B; and resistors R34-35, R37-38, and R45 form a window comparator with threshold voltages of approximately ± 50 mV. If the anti-plating currents are balanced, the voltage at the input to this comparator will be zero volts, and the outputs of U4:A and U4:B will be high (approximately 10-11 volts). Since the anodes of D6 and D7 are connected to the + 12 V power supply, and LEDs have turn-on voltages of about 2 volts, no current will flow through these indicators. If the voltage at TP17 is higher than 50 mV, the output of U4:B will stay high, but the output of U4:A will go low (1-2 volts), and current will flow through R39 and D7, lighting D7. On the other hand, if the voltage at TP17 is less than -50 mV, the output U4:A will stay high, but the output of U4:B will go low, and current will flow through R36 and D6, lighting D6. Unless the ACM is properly balanced, either D6 or D7 will be lit, indicating not only that an imbalance exists, but which direction R3 must be adjusted to bring the ACM into balance.

Power Supplies

The ACM is powered from either five or four (if it is the version without optical isolation) standard 9-V transistor radio batteries. This type of battery was chosen for its ready availability almost anywhere. Batteries B1-B4 power the ACM through switch S2, while battery B5 powers the optical isolation circuit through switch S4. A separate switch was provided for the optical isolation circuit to avoid wasting battery power if optical isolation is not required in a specific application.

Integrated circuit U12, along with capacitors C10-C13, form a positive voltage regulator which provides +12 volts. Integrated circuit U13, along with capacitors C14-C17, form a negative voltage regulator which provides -12 volts. Zener diode D9 and resistor R40 limit the current into power indicator LED D8. Diode D9 also fulfills a secondary function of allowing D8 to indicate a low battery condition. Unless the combined output of both the positive and negative regulators exceeds 18 volts, D9 will not conduct, and no current will flow through D8. If the ACM power switch is turned to the ON position and the power indicator does not light, either there are no batteries in the instrument, or the batteries need to be replaced. This arrangement

prevents the use of the ACM if the batteries otherwise would have enough voltage to light the power indicator, but not enough voltage for proper operation of the ACM.

Integrated circuit U15 and capacitor C20 form a low-noise precision 5-volt reference. This voltage is inverted by amplifier U2:A, resistors R41and R42. Capacitor C42 further reduces any high-frequency noise that might be generated either by U2 or U15. These ± 5-volt reference voltages are used to provide stable references for the anti-plating balance potentiometer, R3, the window comparator U4:A and U4:B, and to power U6, the high output state voltage of which must not vary from a constant 5 volts for the ACM to be remain properly calibrated.

Integrated Circuit U14 and capacitors C18-C19 form a + 5 volt regulator which is used to provide power to the output stage of comparator U5.

Integrated circuit U17 and resistor R46 provide a constant current into zener diode D10 and isolation power indicator LED D11 when S2 is closed. The constant current keeps the brightness of D11 constant regardless of battery voltage, and prevents excessive battery current. Zener Diode D10 prevents D1 from lighting if the voltage from B5 is too low for proper operation of the isolator. Integrated circuit U18 with capacitors C43 and C44 form a low-dropout, minimum battery drain voltage regulator that provides the isolated +5 volts for the output side of optical isolator U16.

Capacitors C21-22 and C24-C39 are power supply bypass capacitors for the various ICs in the ACM.

APPENDIX A

SCHEMATIC ACM2-02

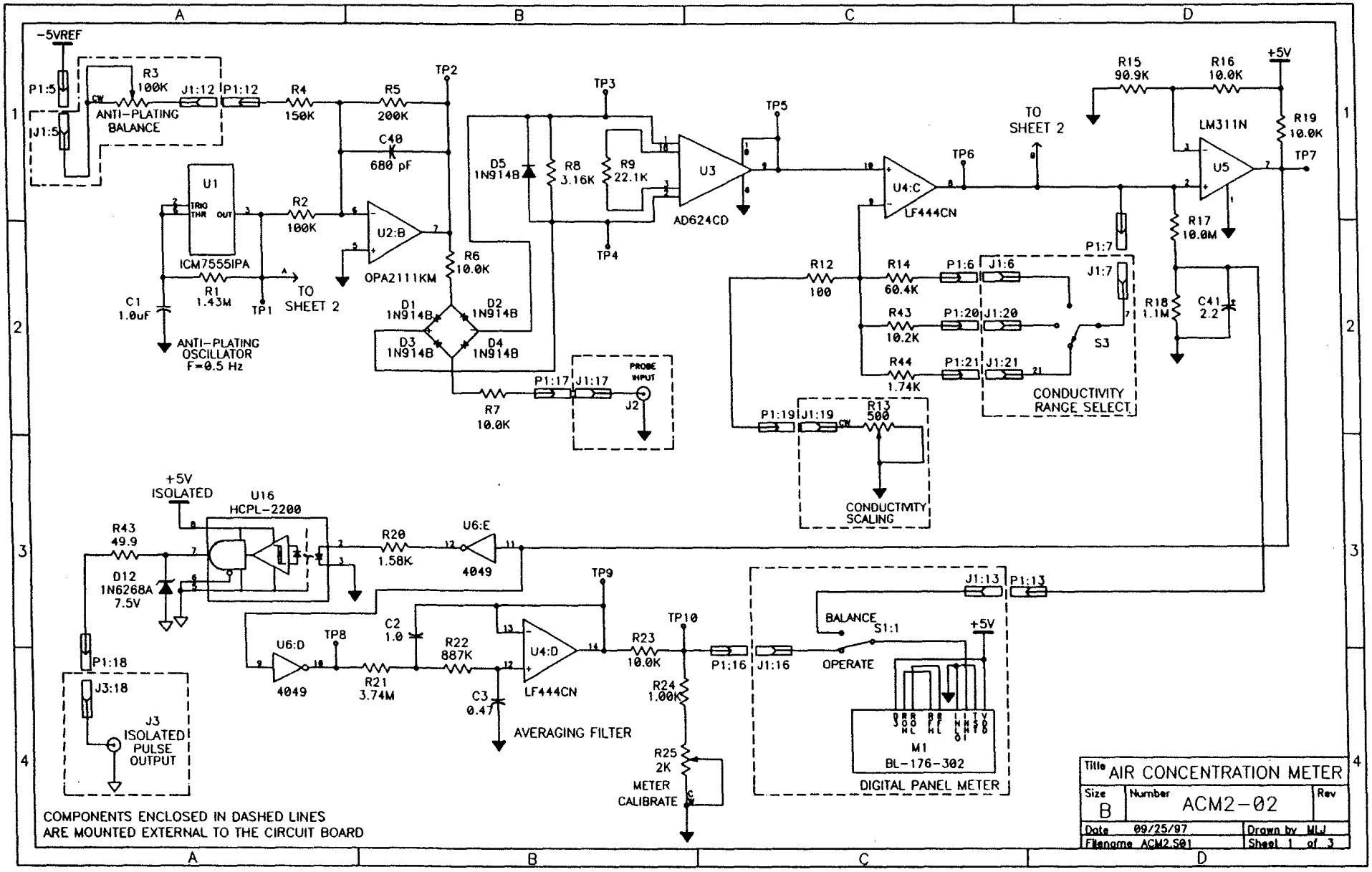
-5VREF
P1:5
J1:5
R3
100K
ANTI-PLATING
BALANCE
J1:12
P1:12
R4
150K
R5
200K
TP2
C40
680 pF
U1
ICM7555IPA
R2
100K
R1
1.43M
TP1
TO
SHEET 2
C1
1.0uF
ANTI-PLATING
OSCILLATOR
F=0.5 Hz
U2:B
OPA2111KM
R6
10.0K
D1
1N914B
D2
1N914B
D3
1N914B
D4
1N914B
R7
10.0K
P1:17
J1:17
PROBE
INPUT
J2
D5
1N914B
R8
3.16K
R9
22.1K
TP3
TP4
U3
AD624CD
TP5
U4:C
LF444CN
TP6
TO
SHEET 2
R15
90.9K
R16
10.0K
+5V
LM311N
U5
R19
10.0K
TP7
R17
10.0M
R18
1.1M
C41
2.2
P1:7
J1:7
S3
R12
100
R14
60.4K
P1:6
J1:6
R43
10.2K
P1:20
J1:20
R44
1.74K
P1:21
J1:21
CONDUCTIVITY
RANGE SELECT
P1:19
J1:19
R13
500
CONDUCTIVITY
SCALING
+5V
ISOLATED
U16
HCPL-2200
R43
49.9
D12
1N6268A
7.5V
R20
1.58K
U6:E
4049
TP9
U6:D
4049
TP8
C2
1.0
R22
887K
R21
3.74M
U4:D
LF444CN
C3
0.47
AVERAGING FILTER
R23
10.0K
TP10
R24
1.00K
R25
2K
METER
CALIBRATE
P1:18
J3:18
J3
ISOLATED
PULSE
OUTPUT
J1:13
P1:13
BALANCE
S1:1
OPERATE
+5V
P1:16
J1:16
M1
BL-176-302
DIGITAL PANEL METER
COMPONENTS ENCLOSED IN DASHED LINES
ARE MOUNTED EXTERNAL TO THE CIRCUIT BOARD
Title AIR CONCENTRATION METER
Size B
Number ACM2-02
Rev
Date 09/25/97
Drawn by MLJ
Filename ACM2.S01
Sheet 1 of 3

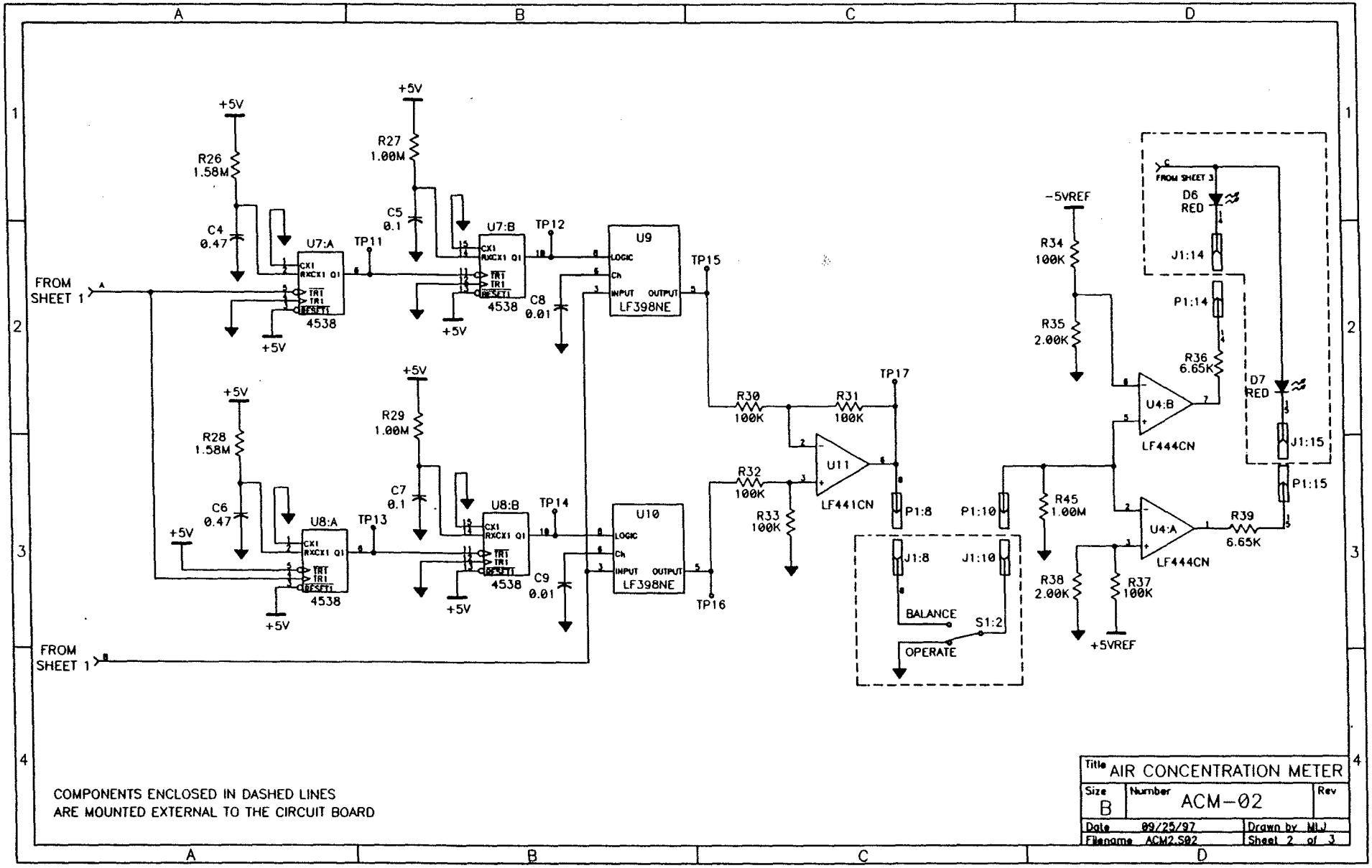

COMPONENTS ENCLOSED IN DASHED LINES
ARE MOUNTED EXTERNAL TO THE CIRCUIT BOARD

Title AIR CONCENTRATION METER		
Size B	Number ACM-02	Rev
Date 09/25/97		Drawn by MLJ
Filename ACM2.S02		Sheet 2 of 3

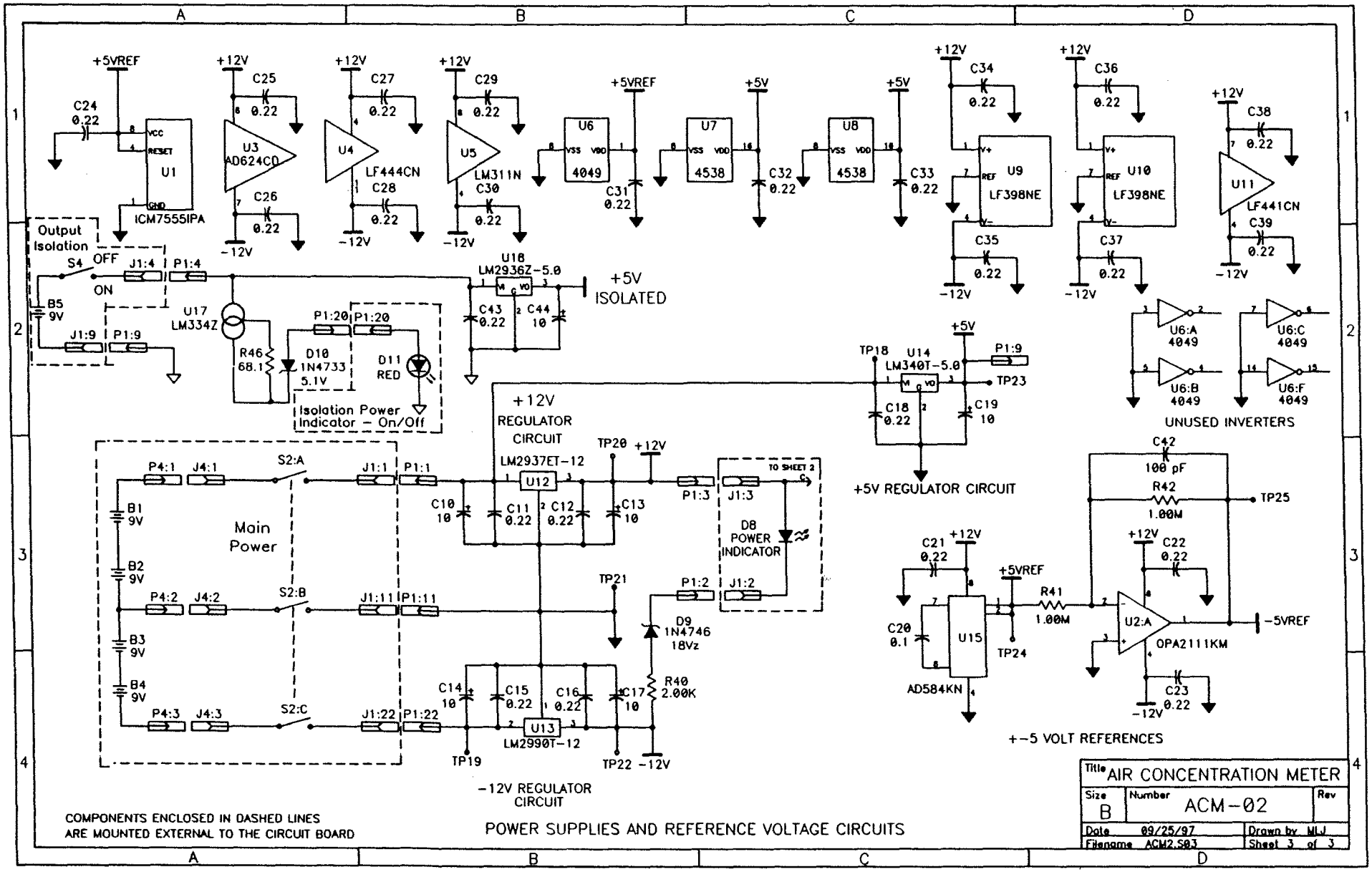
+5VREF
C24 0.22
U1 ICM7555IPA
+12V
C25 0.22
C26 0.22
U3 AD624CD
-12V
C27 0.22
C28 0.22
U4 LF444CN
C29 0.22
C30 0.22
U5 LM311N
U6 4049
U7 4538
U8 4538
+5V
C31 0.22
C32 0.22
C33 0.22
C34 0.22
C35 0.22
U9 LF398NE
C36 0.22
C37 0.22
U10 LF398NE
C38 0.22
C39 0.22
U11 LF441CN
Output Isolation
S4 OFF ON
J1:4 P1:4
B5 9V
J1:9 P1:9
U17 LM334Z
R46 68.1
D10 1N4733 5.1V
P1:20 P1:20
D11 RED
Isolation Power Indicator - On/Off
U18 LM2936Z-5.0
C43 0.22
C44 10
+5V ISOLATED
TP18
U14 LM340T-5.0
P1:9
TP23
C18 0.22
C19 10
+5V REGULATOR CIRCUIT
U6:A 4049
U6:B 4049
U6:C 4049
U6:F 4049
UNUSED INVERTERS
+12V REGULATOR CIRCUIT
LM2937ET-12
U12
TP20
P4:1 J4:1 S2:A J1:1 P1:1
B1 9V
B2 9V
B3 9V
B4 9V
Main Power
P4:2 J4:2 S2:B J1:11 P1:11
P4:3 J4:3 S2:C J1:22 P1:22
C10 10
C11 0.22
C12 0.22
C13 10
P1:3 J1:3
TO SHEET 2
D8 POWER INDICATOR
TP21
P1:2 J1:2
D9 1N4746 18Vz
R40 2.00K
C14 10
C15 0.22
C16 0.22
C17 10
U13 LM2990T-12
TP19
TP22
-12V REGULATOR CIRCUIT
C42 100 pF
R42 1.00M
TP25
C21 0.22
C20 0.1
U15 AD584KN
TP24
R41 1.00M
C22 0.22
U2:A OPA2111KM
-5VREF
C23 0.22
+-5 VOLT REFERENCES
COMPONENTS ENCLOSED IN DASHED LINES ARE MOUNTED EXTERNAL TO THE CIRCUIT BOARD
POWER SUPPLIES AND REFERENCE VOLTAGE CIRCUITS
Title AIR CONCENTRATION METER
Size B
Number ACM-02
Rev
Date 09/25/97
Drawn by MLJ
Filename ACM2.S03
Sheet 3 of 3

APPENDIX B

SCHEMATIC ACM-01

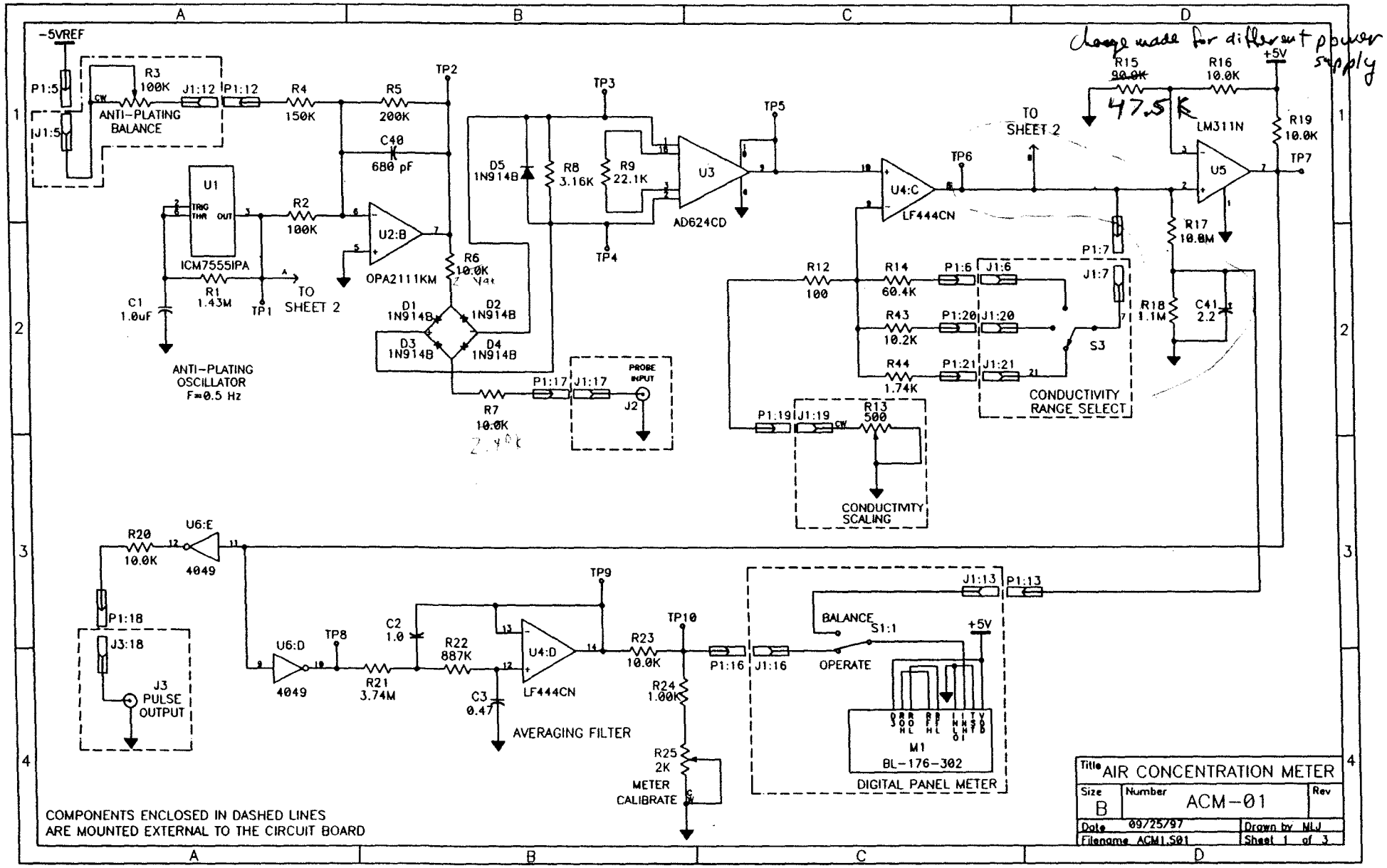

change made for different power supply

APPENDIX C

SCHEMATIC OI-01

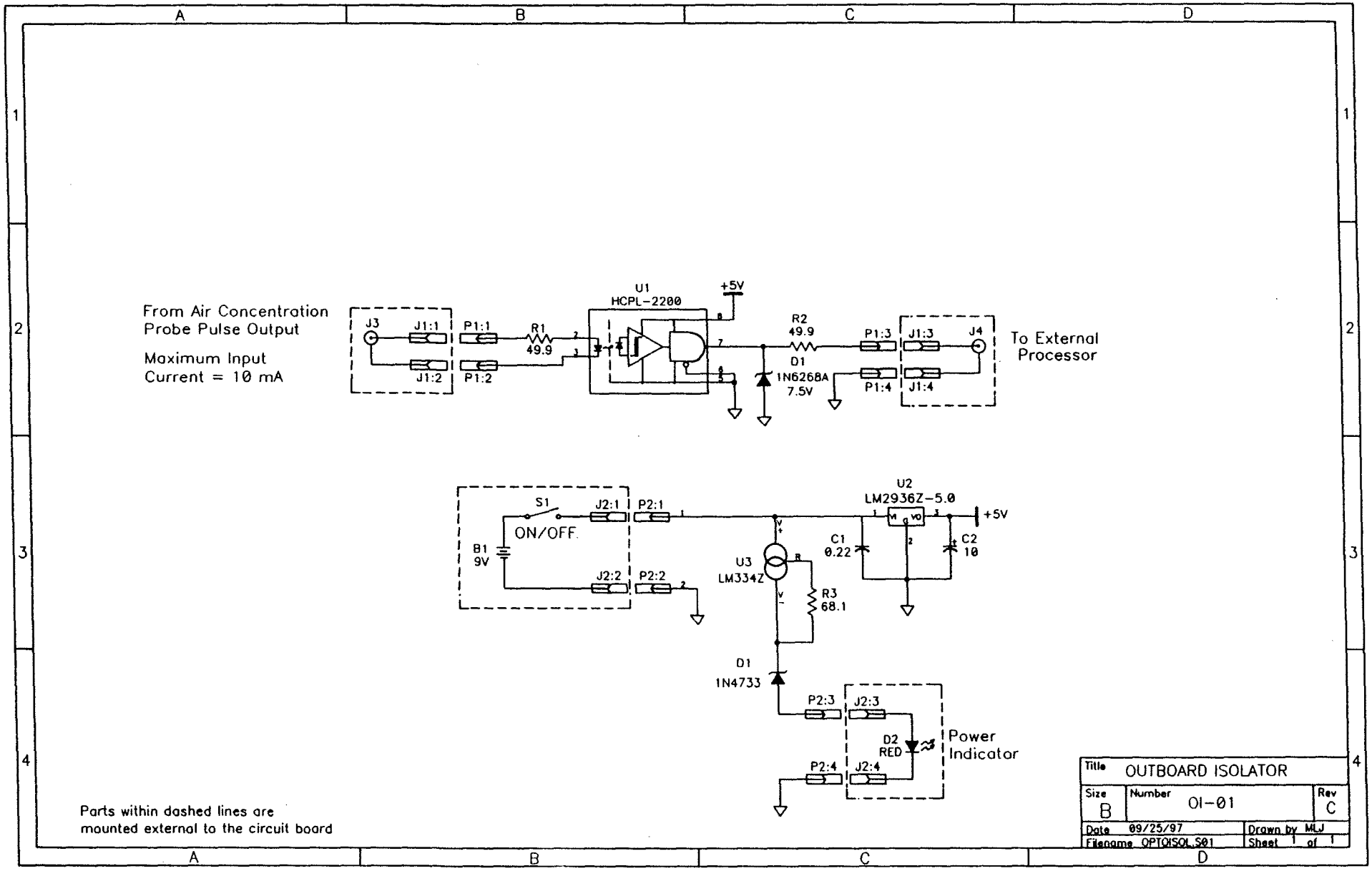
From Air Concentration
Probe Pulse Output
Maximum Input
Current = 10 mA
J3
J1:1
J1:2
P1:1
P1:2
R1
49.9
U1
HCPL-2200
+5V
R2
49.9
D1
1N6268A
7.5V
P1:3
P1:4
J1:3
J1:4
J4
To External
Processor
S1
ON/OFF
B1
9V
J2:1
J2:2
P2:1
P2:2
U2
LM2936Z-5.0
+5V
C1
0.22
C2
10
U3
LM334Z
R3
68.1
D1
1N4733
P2:3
P2:4
J2:3
J2:4
D2
RED
Power
Indicator
Parts within dashed lines are
mounted external to the circuit board
Title
OUTBOARD ISOLATOR
Size
B
Number
01-01
Rev
C
Date
09/25/97
Drawn by
MLJ
Filename
OPTOISOL.S01
Sheet
1
of
1

APPENDIX D

AIR CONCENTRATION METER
BILL OF MATERIALS

Bill of Materials
Air Concentration Meter

CIRCUIT BOARD ASSEMBLY

Quantity	Part #
1	ACM-02

POTENTIOMETERS, 10 TURN

Quantity	Type	Reference Designators
1	500	R13
1	100k	R3

DIODES

4	HIGH-EFFICIENCY RED LIGHT-EMITTING DIODE	D6,D7,D8,D11

SWITCHES

Quantity	Type	Reference Designators
1	1-POLE, 1 POSITION TOGGLE	S4
1	2-POLE, 1 POSITION TOGGLE	S1
1	3-POLE, 1 POSITION TOGGLE	S2
1	1-POLE, 3 POSITION ROTARY	S3

APPENDIX E

AIR CONCENTRATION METER
CIRCUIT BOARD ASSEMBLY
BILL OF MATERIALS

Bill of Materials

Air Concentration Meter Circuit Board Assembly

CIRCUIT BOARD

Quantity	Part #
1	ACM-02

RESISTORS: 1/8 W, RN55D type unless otherwise indicated

Quantity	Value (Ω)	Reference Designators
1	49.9	R43
1	68.1	R46
1	100	R12
1	1.00K	R24
1	1.58K	R20
1	1.74K	R44
3	2.00K	R35,R38,R40
1	3.16K	R8
2	6.65K	R36,R39
5	10.0K	R6,R7,R16,R19,R23
1	10.2K	R43
1	22.1K	R9
1	60.4K	R14
1	90.9K	R15
7	100K	R2,R30,R31,R32,R33,R34,R37
1	150K	R4

Ceramic, X7R or equivalent Dielectric

Quantity	Value (μF)	Reference Designators
1	100 pF	C42
1	680 pF	C40

Ceramic, Z5U or equivalent Dielectric

Quantity	Value (μF)	Reference Designators
25	0.22	C11,C12,C15,C16,C18,C21, C22,C23,C24,C25,C26,C27, C28,C29,C30,C31,C32,C33, C34,C35,C36,C37,C38,C39, C43

CAPACITORS: Polarized, Tantalum

Quantity	Value (μF @ WVDC)	Reference Designators
1	2.2 @ 16	C41
6	10 @ 16	C10,C13,C14,C17,C19,C44

DIODES

Quantity	Type	Reference Designators
5	1N914B	D1,D2,D3,D4,D5

ZENER DIODES

Quantity	Type	Voltage	Reference Designators
1	1N4743	5.1V	D10
1	1N4746	18V	D9

SOCKETS

7	8-PIN MINI-DIP	U1,U2,U5,U9,U10,U11,U15
2	14-PIN DIP	U4,U6
3	16-PIN DIP	U3,U7,U8

MISCELLANEOUS

25	TESTPOINT	TP1,TP2,TP3,TP4,TP5,TP6,TP7,TP8,TP9,TP10, TP11,TP12,TP13,TP14,TP15,TP16,TP17,TP18, TP19,TP20,TP21,TP22,TP23,TP24,TP25

Total Parts: 151

1. Specific types of integrated circuits may often be obtained from more than one manufacturer. The manufacturers listed are the primary manufacturer, usually the company that first produced the part. Manufacturer abbreviations are:

AD Analog Devices Inc.

BB Burr-Brown Corp.

N Numerous manufacturers. Examples would be National Semiconductor Corp. and Motorola Inc.

NSC National Semiconductor Corp.

M Maxim Integrated Products, Inc.

APPENDIX F

INTEGRATED CIRCUIT MANUFACTURER'S PARTIAL DATA SHEETS

Pin Programmable Precision Voltage Reference

AD584*

FEATURES

Four Programmable Output Voltages:
10.000V, 7.500V, 5.000V, 2.500V
Laser-Trimmed to High Accuracies
No External Components Required
Trimmed Temperature Coefficient:
5ppm/°C max, 0 to +70°C (AD584L)
15ppm/°C max, −55°C to +125°C (AD584T)
Zero Output Strobe Terminal Provided
Two Terminal Negative Reference Capability (5V & Above)
Output Sources or Sinks Current
Low Quiescent Current: 1.0mA max
10mA Current Output Capability
MIL-STD-883 Compliant Versions Available

PIN CONFIGURATIONS

8-Pin TO-99

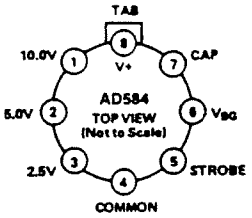

8-Pin DIP

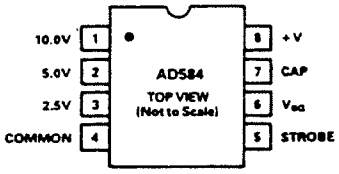

PRODUCT DESCRIPTION

The AD584 is an eight-terminal precision voltage reference offering pin-programmable selection of four popular output voltages: 10.000V, 7.500V, 5.000V and 2.500V. Other output voltages, above, below or between the four standard outputs, are available by the addition of external resistors. Input voltage may vary between 4.5 and 30 volts.

Laser Wafer Trimming (LWT) is used to adjust the pin-programmable output levels and temperature coefficients, resulting in the most flexible high precision voltage reference available in monolithic form.

In addition to the programmable output voltages, the AD584 offers a unique strobe terminal which permits the device to be turned on or off. When the AD584 is used as a power supply reference, the supply can be switched off with a single, low-power signal. In the "off" state the current drain by the AD584 is reduced to about 100μA. In the "on" state the total supply current is typically 750μA including the output buffer amplifier.

The AD584 is recommended for use as a reference for 8-, 10- or 12-bit D/A converters which require an external precision reference. The device is also ideal for all types of A/D converters of up to 14 bit accuracy, either successive approximation or integrating designs, and in general can offer better performance than that provided by standard self-contained references.

The AD584J, K and L are specified for operation from 0 to +70°C; the AD584S and T are specified for the −55°C to +125°C range. All grades are packaged in a hermetically sealed eight-terminal TO-99 metal can; the AD584J and K are also available in an 8-pin plastic DIP.

*Protected by U.S. Patent No. 3,887,863; RE 30, 586

PRODUCT HIGHLIGHTS

1. The flexibility of the AD584 eliminates the need to design-in and inventory several different voltage references. Furthermore one AD584 can serve as several references simultaneously when buffered properly.
2. Laser trimming of both initial accuracy and temperature coefficient results in very low errors over temperature without the use of external components. The AD584LH has a maximum deviation from 10.000 volts of ±7.25mV from 0 to +70°C.
3. The AD584 can be operated in a two-terminal "Zener" mode at 5 volts output and above. By connecting the input and the output, the AD584 can be used in this "Zener" configuration as a negative reference.
4. The output of the AD584 is configured to sink or source currents. This means that small reverse currents can be tolerated in circuits using the AD584 without damage to the reference and without disturbing the output voltage (10V, 7.5V and 5V outputs).
5. The AD584 is available in versions compliant with MIL-STD-883. Refer to the Analog Devices Military Products Databook or current AD584/883B data sheet for detailed specifications.

Precision Instrumentation Amplifier

AD624

FEATURES

Low Noise: 0.2μV p-p 0.1Hz to 10Hz
Low Gain TC: 5ppm max (G = 1)
Low Nonlinearity: 0.001% max (G = 1 to 200)
High CMRR: 130dB min (G = 500 to 1000)
Low Input Offset Voltage: 25μV, max
Low Input Offset Voltage Drift: 0.25μV/°C max
Gain Bandwidth Product: 25MHz
Pin Programmable Gains of 1, 100, 200, 500, 1000
No External Components Required
Internally Compensated

AD624 FUNCTIONAL BLOCK DIAGRAM

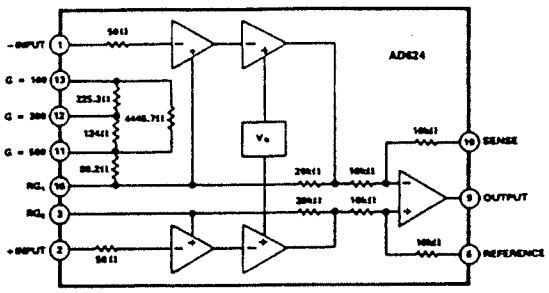

PRODUCT DESCRIPTION

The AD624 is a high precision low noise instrumentation amplifier designed primarily for use with low level transducers, including load cells, strain gauges and pressure transducers. An outstanding combination of low noise, high gain accuracy, low gain temperature coefficient and high linearity make the AD624 ideal for use in high resolution data acquisition systems.

The AD624C has an input offset voltage drift of less than 0.25μV/°C, output offset voltage drift of less than 10μV/°C, CMRR above 80dB at unity gain (130dB at G = 500) and a maximum nonlinearity of 0.001% at G = 1. In addition to these outstanding dc specifications the AD624 exhibits superior ac performance as well. A 25MHz gain bandwidth product, 5V/μs slew rate and 15μs settling time permit the use of the AD624 in high speed data acquisition applications.

The AD624 does not need any external components for pre-trimmed gains of 1, 100, 200, 500 and 1000. Additional gains such as 250 and 333 can be programmed within one percent accuracy with external jumpers. A single external resistor can also be used to set the 624's gain to any value in the range of 1 to 10,000.

PRODUCT HIGHLIGHTS

1. The AD624 offers outstanding noise performance. Input noise is typically less than 4nV/$\sqrt{Hz}$ at 1kHz.
2. The AD624 is a functionally complete instrumentation amplifier. Pin programmable gains of 1, 100, 200, 500 and 1000 are provided on the chip. Other gains are achieved through the use of a single external resistor.
3. The offset voltage, offset voltage drift, gain accuracy and gain temperature coefficients are guaranteed for all pre-trimmed gains.
4. The AD624 provides totally independent input and output offset nulling terminals for high precision applications. This minimizes the effect of offset voltage in gain ranging applications.
5. A sense terminal is provided to enable the user to minimize the errors induced through long leads. A reference terminal is also provided to permit level shifting at the output.

Model	AD624A Min	AD624A Typ	AD624A Max	AD624B Min	AD624B Typ	AD624B Max	AD624C Min	AD624C Typ	AD624C Max	AD624S Min	AD624S Typ	AD624S Max	Units
R.T.I., 0.1 to 10Hz													
G = 1		10			10			10			10		μV p-p
G = 100		0.3			0.3			0.3			0.3		μV p-p
G = 200, 500, 1000		0.2			0.2			0.2			0.2		μV p-p
Current Noise													
0.1Hz to 10Hz		60			60			60			60		pA p-p
SENSE INPUT													
R_{IN}	8	10	12	8	10	12	8	10	12	8	10	12	kΩ
I_{IN}		30			30			30			30		μA
Voltage Range	±10			±10			±10			±10			V
Gain to Output		1			1			1			1		%
REFERENCE INPUT													
R_{IN}	16	20	24	16	20	24	16	20	24	16	20	24	kΩ
I_{IN}		30			30			30			30		μA
Voltage Range	±10			±10			±10			±10			V
Gain to Output		1			1			1			1		%
TEMPERATURE RANGE													
Specified Performance	−25		+85	−25		+85	−25		+85	−55		+125	°C
Storage	−65		+150	−65		+150	−65		+150	−65		+150	°C
POWER SUPPLY													
Power Supply Range	±6	±15	±18	±6	±15	±18	±6	±15	±18	±6	±15	±18	V
Quiescent Current		3.5	5		3.5	5		3.5	5		3.5	5	mA
PACKAGE[2]													
Ceramic (D-16)		AD624A			AD624B			AD624C			AD624S		
A and S Grade Chips Available													

NOTES

[1]V_{DL} is the maximum differential input voltage at G = 1 for specified nonlinearity. V_{DL} at other gains = 10V/G. V_D = actual differential input voltage. Example: G = 10, V_D = 0.5V. V_{OM} = 12V − (10/2 × 0.50V) = 9.5V.

[2]See Section 20 for package outline information.

Specifications subject to change without notice.

Specifications shown in boldface are tested on all production unit at final electrical test. Results from those tests are used to calculate outgoing quality levels. All min and max specifications are guaranteed, although only those shown in boldface are tested on all production units.

ABSOLUTE MAXIMUM RATINGS*

Supply Voltage . . . . . ±18V
Internal Power Dissipation 420mW
Input Voltage . . . . . $\pm V_S$
Differential Input Voltage . . . . . $\pm V_S$
Output Short Circuit Duration . . . . . Indefinite
Storage Temperate Range . . . . . −65°C to +150°C
Operating Temperature Range
AD624A/B/C . . . . . −25°C to +85°C
AD624S . . . . . −55°C to +125°C
Lead Temperature (Soldering, 60secs) . . . . . +300°C

*Stresses above those listed under "Absolute Maximum Ratings" may cause permanent damage to the device. This is a stress rating only and functional operation of the device at these or any other conditions above those indicated in the operational sections of this specification is not implied. Exposure to absolute maximum rating conditions for extended periods may affect device reliability.

PIN CONFIGURATION

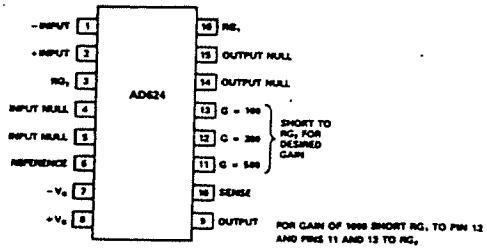

General Purpose Timers

Detailed Description

Both the ICM7555 timer and the ICM7556 dual timer can be configured for either astable or monostable operation. In the astable mode the free running frequency and the duty cycle are controlled by two external resistors and one capacitor. Similarly, the pulse width in the monostable mode is precisely controlled by one external resistor and capacitor.

The external component count is decreased when replacing a bipolar timer with the ICM7555 or ICM7556. The bipolar devices produce large crowbar currents in the output driver. To compensate for this spike, a capacitor is used to decouple the power supply lines. The CMOS timers produce supply spikes of only 2-3mA vs. 300-400mA (Bipolar), therefore supply decoupling is typically not needed. This current spike comparison is illustrated in Figure 3. Another component is eliminated at the control voltage pin. These CMOS timers, due to the high impedance inputs of the comparators, do not require decoupling capacitors on the control voltage pin.

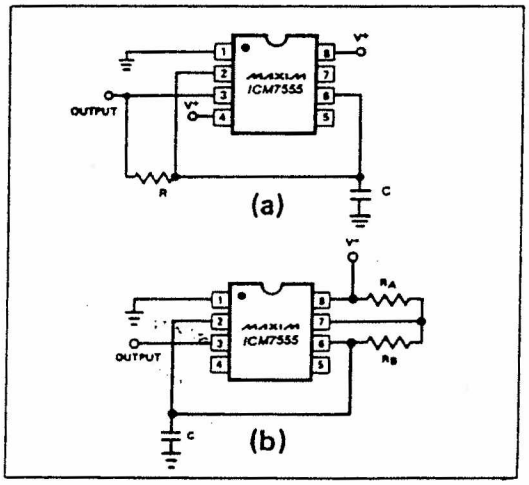

Figure 1. Maxim ICM7555 used in two different astable configurations.

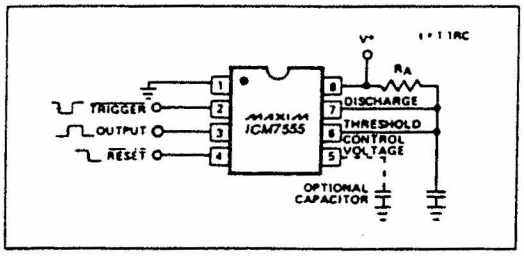

Figure 2. Maxim ICM7555 in a monostable operation.

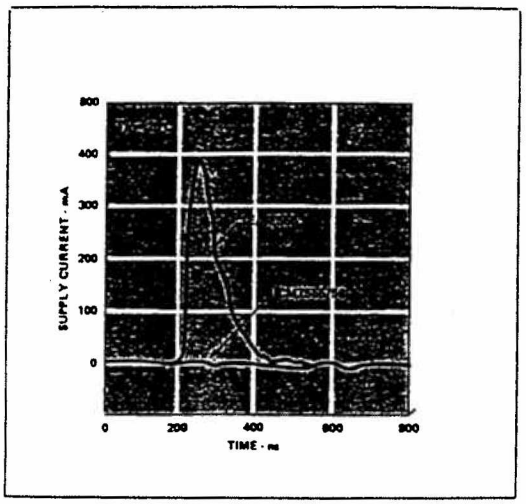

Figure 3. Supply current transient compared with a standard bipolar 555 during an output transition.

Applications Information

Astable Operation

We recommend either of the two astable circuit configurations illustrated in Figure 1. The circuit in (1a) provides a 50% duty cycle output using one timing resistor and capacitor. The oscillator waveform across the capacitor is symmetrical and triangular, swinging from ⅓ to ⅔ of the supply voltage. The frequency generated is defined by:

$$f = \frac{1}{1.4\,RC}$$

The circuit in (1b) provides a means of varying the duty cycle of the oscillator. The frequency is defined by:

$$f = \frac{1.46}{(R_A + 2R_B)C}$$

The duty cycle is:

$$D = \frac{R_B}{R_A + 2R_B}$$

Monostable Operation

The circuit diagram in Figure 2 illustrates monostable operation. In this mode the timer acts as a one shot. Initially the external capacitor is held discharged by the discharge output. Upon application of a negative $\overline{\text{TRIGGER}}$ pulse to pin 2, the capacitor begins to charge exponentially through R_A. The device resets after the voltage across the capacitor reaches ⅔(V^+).

$$t_{output} = -\ln(⅓)R_AC = 1.1\,R_AC$$

HEWLETT PACKARD

LOW INPUT CURRENT LOGIC GATE OPTOCOUPLER

HCPL-2200
HCPL-2219

SCHEMATIC

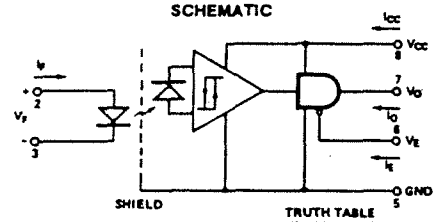

TRUTH TABLE
(Positive Logic)

LED	ENABLE	OUTPUT
ON	H	Z
OFF	H	Z
ON	L	H
OFF	L	L

OUTLINE DRAWING

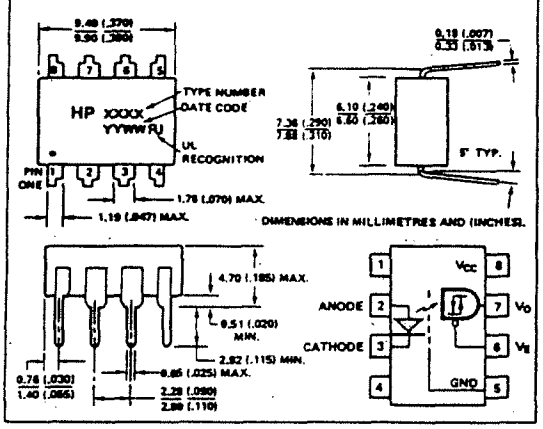

Features

- VERY HIGH COMMON MODE REJECTION 2.5 KV/µs AT 400 V V_{CM} GUARANTEED (HCPL-2219)
- COMPATIBLE WITH LSTTL, TTL, AND CMOS LOGIC
- WIDE V_{CC} RANGE (4.5 TO 20 VOLTS)
- 2.5 MBAUD GUARANTEED OVER TEMPERATURE
- LOW INPUT CURRENT (1.6 mA)
- THREE STATE OUTPUT (NO PULLUP RESISTOR REQUIRED)
- GUARANTEED PERFORMANCE FROM 0° C TO +85° C
- INTERNAL SHIELD FOR HIGH COMMON MODE REJECTION
- RECOGNIZED UNDER THE COMPONENT PROGRAM OF U.L. (FILE NO. E55361) FOR DIELECTRIC WITHSTAND PROOF TEST VOLTAGES OF 2500 Vac, 1 MINUTE
- CSA APPROVED
- MIL-STD-1772 VERSION AVAILABLE (HCPL-5200/1)

Applications

- Isolation of High Speed Logic Systems
- Computer-Peripheral Interfaces
- Microprocessor System Interfaces
- Ground Loop Elimination
- Pulse Transformer Replacement
- Isolated Buss Driver
- High Speed Line Receiver

Description

The HCPL-2200 is an optically coupled logic gate that combines a GaAsP LED and an integrated high gain photon detector. The detector has a three state output stage and has a detector threshold with hysteresis. The three state output eliminates the need for a pullup resistor and allows for direct drive of data busses. The hysteresis provides differential mode noise immunity and eliminates the potential for output signal chatter. The detector IC has an internal shield that provides a guaranteed common mode transient immunity of 1,000 volts/µsec. Higher CMR specifications are available upon request.

The Electrical and Switching Characteristics of the HCPL-2200 are guaranteed over the temperature range of 0° C to 85° C. The HCPL-2200 is guaranteed to operate over a V_{CC} range of 4.5 volts to 20 volts. Low I_F and wide V_{CC} range allow compatibility with TTL, LSTTL, and CMOS logic. Low I_F and low I_{CC} result in lower power consumption compared to other high speed optocouplers. Logic signals are transmitted with a typical propagation delay of 160 nsec.

The HCPL-2200 is useful for isolating high speed logic interfaces, buffering of input and output lines, and implementing isolated line receivers in high noise environments.

Recommended Operating Conditions

Parameter	Symbol	Min.	Max.	Units
Power Supply Voltage	V_{CC}	4.5	20	Volts
Enable Voltage High	V_{EH}	2.0	20	Volts
Enable Voltage Low	V_{EL}	0	0.8	Volts
Forward Input Current	$I_{F(ON)}$	1.6*	5	mA
Forward Input Current	$I_{F(OFF)}$	—	0.1	mA
Operating Temperature	T_A	0	85[1]	°C
Fan Out	N		4	TTL Loads

*The initial switching threshold is 1.6 mA or less. It is recommended that 2.2 mA be used to permit at least a 20% CTR degradation guardband.

National Semiconductor

LF198/LF298/LF398, LF198A/LF398A Monolithic Sample-and-Hold Circuits

General Description

The LF198/LF298/LF398 are monolithic sample-and-hold circuits which utilize BI-FET technology to obtain ultra-high dc accuracy with fast acquisition of signal and low droop rate. Operating as a unity gain follower, dc gain accuracy is 0.002% typical and acquisition time is as low as 6 μs to 0.01%. A bipolar input stage is used to achieve low offset voltage and wide bandwidth. Input offset adjust is accomplished with a single pin, and does not degrade input offset drift. The wide bandwidth allows the LF198 to be included inside the feedback loop of 1 MHz op amps without having stability problems. Input impedance of $10^{10}\Omega$ allows high source impedances to be used without degrading accuracy.

P-channel junction FET's are combined with bipolar devices in the output amplifier to give droop rates as low as 5 mV/min with a 1 μF hold capacitor. The JFET's have much lower noise than MOS devices used in previous designs and do not exhibit high temperature instabilities. The overall design guarantees no feed-through from input to output in the hold mode, even for input signals equal to the supply voltages.

Features

- Operates from ±5V to ±18V supplies
- Less than 10 μs acquisition time
- TTL, PMOS, CMOS compatible logic input
- 0.5 mV typical hold step at C_h = 0.01 μF
- Low input offset
- 0.002% gain accuracy
- Low output noise in hold mode
- Input characteristics do not change during hold mode
- High supply rejection ratio in sample or hold
- Wide bandwidth

Logic inputs on the LF198 are fully differential with low input current, allowing direct connection to TTL, PMOS, and CMOS. Differential threshold is 1.4V. The LF198 will operate from ±5V to ±18V supplies.

An "A" version is available with tightened electrical specifications.

Typical Connection and Performance Curve

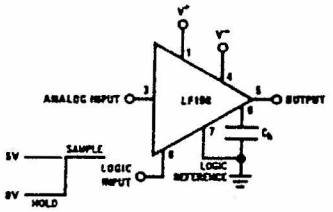

Acquisition Time

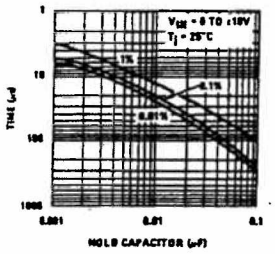

TL/H/5692–2

Connection Diagrams

Dual-In-Line Package

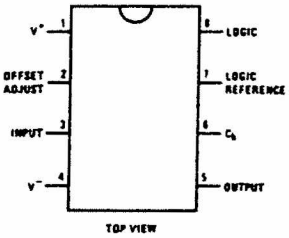

TL/H/5692–11

Order Number LF398N or LF398AN
See NS Package Number N08E

Small-Outline Package

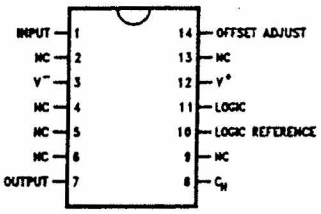

TL/H/5692–15

Order Number LF298M or LF398M
See NS Package Number M14A

Metal Can Package

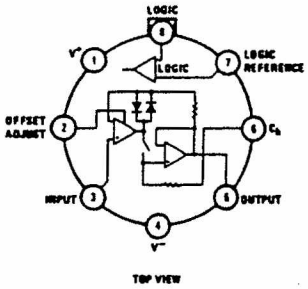

TL/H/5692–14

Order Number LF198H, LF298H, LF398H, LF198AH or LF398AH
See NS Package Number H08C

National Semiconductor

LF444 Quad Low Power JFET Input Operational Amplifier

General Description

The LF444 quad low power operational amplifier provides many of the same AC characteristics as the industry standard LM148 while greatly improving the DC characteristics of the LM148. The amplifier has the same bandwidth, slew rate, and gain (10 kΩ load) as the LM148 and only draws one fourth the supply current of the LM148. In addition the well matched high voltage JFET input devices of the LF444 reduce the input bias and offset currents by a factor of 10,000 over the LM148. The LF444 also has a very low equivalent input noise voltage for a low power amplifier.

The LF444 is pin compatible with the LM148 allowing an immediate 4 times reduction in power drain in many applications. The LF444 should be used wherever low power dissipation and good electrical characteristics are the major considerations.

Features

- ¼ supply current of a LM148 — 200 μA/Amplifier (max)
- Low input bias current — 50 pA (max)
- High gain bandwidth — 1 MHz
- High slew rate — 1 V/μs
- Low noise voltage for low power — 35 nV/√Hz
- Low input noise current — 0.01 pA/√Hz
- High input impedance — $10^{12}\Omega$
- High gain $V_O = \pm 10V$, $R_L = 10k$ — 50k (min)

Simplified Schematic

¼ Quad

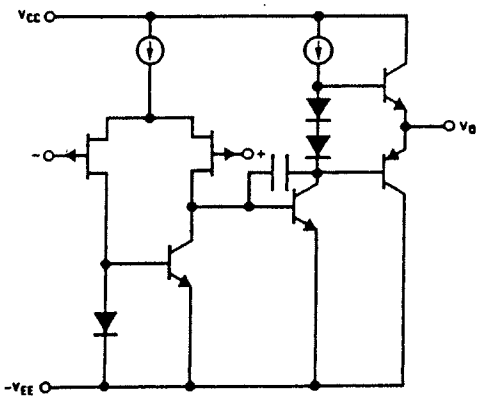

TL/H/9156–1

Connection Diagram

Dual-In-Line Package

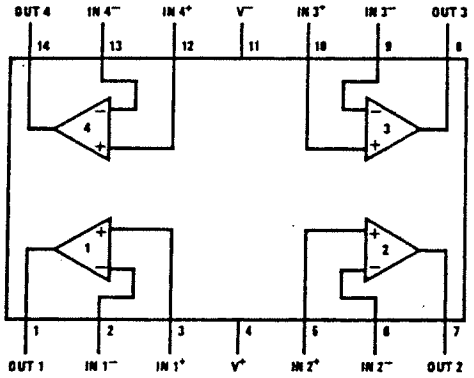

TL/H/9156–2

Top View

Order Number LF444AMD, LF444CD, LF444CM, LF444ACN, LF444CN or LF444MD/883
See NS Package Number D14E, M14A or N14A

Ordering Information

LF444XYZ

X indicates electrical grade

Y indicates temperature range

"M" for military, "C" for commercial

Z indicates package type "D", "M" or "N"

Typical Performance Characteristics (Continued)

Turn-On Voltage

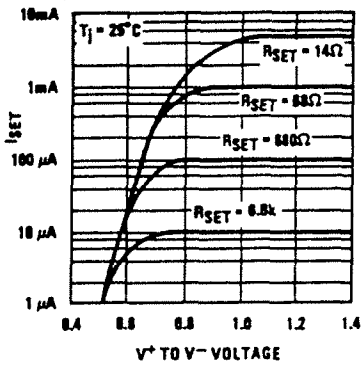

Ratio of I_{SET} to V⁻ Current

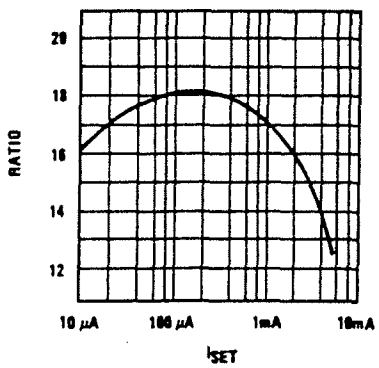

TL/H/5697-3

Application Hints

The LM134 has been designed for ease of application, but a general discussion of design features is presented here to familiarize the designer with device characteristics which may not be immediately obvious. These include the effects of slewing, power dissipation, capacitance, noise, and contact resistance.

SLEW RATE

At slew rates above a given threshold (see curve), the LM134 may exhibit non-linear current shifts. The slewing rate at which this occurs is directly proportional to I_{SET}. At I_{SET} = 10 μA, maximum dV/dt is 0.01V/μs; at I_{SET} = 1 mA, the limit is 1V/μs. Slew rates above the limit do not harm the LM134, or cause large currents to flow.

THERMAL EFFECTS

Internal heating can have a significant effect on current regulation for I_{SET} greater than 100 μA. For example, each 1V increase across the LM134 at I_{SET} = 1 mA will increase junction temperature by ≈ 0.4°C in still air. Output current (I_{SET}) has a temperature coefficient of ≈0.33%/°C, so the change in current due to temperature rise will be (0.4)(0.33) = 0.132%. This is a 10:1 degradation in regulation compared to true electrical effects. Thermal effects, therefore, must be taken into account when DC regulation is critical and I_{SET} exceeds 100 μA. Heat sinking of the TO-46 package or the TO-92 leads can reduce this effect by more than 3:1.

SHUNT CAPACITANCE

In certain applications, the 15 pF shunt capacitance of the LM134 may have to be reduced, either because of loading problems or because it limits the AC output impedance of the current source. This can be easily accomplished by buffering the LM134 with an FET as shown in the applications. This can reduce capacitance to less than 3 pF and improve regulation by at least an order of magnitude. DC characteristics (with the exception of minimum input voltage), are not affected.

NOISE

Current noise generated by the LM134 is approximately 4 times the shot noise of a transistor. If the LM134 is used as an active load for a transistor amplifier, input referred noise will be increased by about 12 dB. In many cases, this is acceptable and a single stage amplifier can be built with a voltage gain exceeding 2000.

LEAD RESISTANCE

The sense voltage which determines operating current of the LM134 is less than 100 mV. At this level, thermocouple or lead resistance effects should be minimized by locating the current setting resistor physically close to the device. Sockets should be avoided if possible. It takes only 0.7Ω contact resistance to reduce output current by 1% at the 1 mA level.

SENSING TEMPERATURE

The LM134 makes an ideal remote temperature sensor because its current mode operation does not lose accuracy over long wire runs. Output current is directly proportional to absolute temperature in degrees Kelvin, according to the following formula:

$$I_{SET} = \frac{(227\mu V/°K)(T)}{R_{SET}}$$

Calibration of the LM134 is greatly simplified because of the fact that most of the initial inaccuracy is due to a gain term (slope error) and not an offset. This means that a calibration consisting of a gain adjustment only will trim both slope and zero at the same time. In addition, gain adjustment is a one point trim because the output of the LM134 extrapolates to zero at 0°K, independent of R_{SET} or any initial inaccuracy.

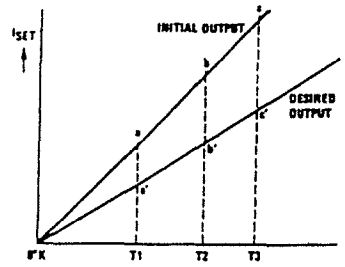

TL/H/5697-4

This property of the LM134 is illustrated in the accompanying graph. Line abc is the sensor current before trimming.

Connection Diagrams and Ordering Information

TO-3 Metal Can Package (K and KC)

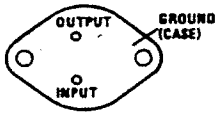

TL/H/7781-11

Bottom View

Steel Package Order Numbers:

LM140AK-5.0	LM140AK-12	LM140AK-15
LM140K-5.0	LM140K-12	LM140K-15
LM140AK-5.0/883	LM140AK-12/883	LM140AK-15/883
LM140K-5.0/883	LM140K-12/883	LM140K-15/883
LM340AK-5.0	LM340AK-12	LM340AK-15
LM340K-5.0	LM340K-12	LM340K-15
LM7806CK	LM7808CK	LM7808K
LM7818CK	LM7818K	LM7824CK
	LM7824K	

See Package Number K02A

Aluminum Package Order Numbers:

LM340KC-5.0
LM340KC-12
LM340KC-15
LM7805CK
LM7812CK
LM7815CK

See Package Number KC02A

TO-220 Power Package (T)

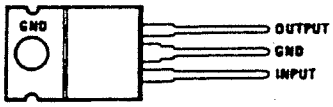

TL/H/7781-12

Top View

Plastic Package Order Numbers:

LM340AT-5.0	LM340T-5.0
LM340AT-12	LM340T-12
LM340AT-15	LM340T-15
LM7805CT	LM7812CT
LM7815CT	LM7806CT
LM7808CT	LM7818CT
	LM7824CT

See Package Number T03B

TO-39 Metal Can Package (H)

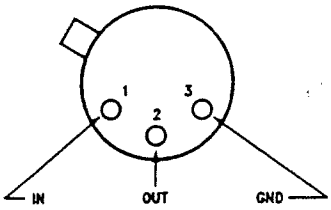

TL/H/7781-19

Top View

Metal Can Order Numbers†:

LM140H-5.0/883	LM140H-6.0/883
LM140H-8.0/883	LM140H-12/883
LM140H-15/883	LM140H-24/883

See Package Number H03A

†The specifications for the LM140H/883 devices are not contained in this datasheet. If specifications for these devices are required, contact the National Semiconductor Sales Office/Distributors.

National Semiconductor

LM2937 500 mA Low Dropout Regulator

General Description

The LM2937 is a positive voltage regulator capable of supplying up to 500 mA of load current. The use of a PNP power transistor provides a low dropout voltage characteristic. With a load current of 500 mA the minimum input to output voltage differential required for the output to remain in regulation is typically 0.5V (1V guaranteed maximum over the full operating temperature range). Special circuitry has been incorporated to minimize the quiescent current to typically only 10 mA with a full 500 mA load current when the input to output voltage differential is greater than 3V.

The LM2937 requires an output bypass capacitor for stability. As with most low dropout regulators, the ESR of this capacitor remains a critical design parameter, but the LM2937 includes special compensation circuitry that relaxes ESR requirements. The LM2937 is stable for all ESR below 3Ω. This allows the use of low ESR chip capacitors.

Ideally suited for automotive applications, the LM2937 will protect itself and any load circuitry from reverse battery connections, two-battery jumps and up to +60V/−50V load dump transients. Familiar regulator features such as short circuit and thermal shutdown protection are also built in.

Features

- Fully specified for operation over −40°C to +125°C
- Output current in excess of 500 mA
- Output trimmed for 5% tolerance under all operating conditions
- Typical dropout voltage of 0.5V at full rated load current
- Wide output capacitor ESR range, up to 3Ω
- Internal short circuit and thermal overload protection
- Reverse battery protection
- 60V input transient protection
- Mirror image insertion protection

Output Voltages

LM2937ET-5.0	5V
LM2937ET-8.0	8V
LM2937ET-10	10V
LM2937ET-12	12V
LM2937ET-15	15V

Typical Application

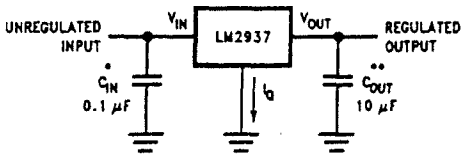

TL/H/11280-1

*Required if the regulator is located more than 3 inches from the power supply filter capacitors.

**Required for stability. C_{OUT} must be at least 10 μF (over the full expected operating temperature range) and located as close as possible to the regulator. The equivalent series resistance, ESR, of the capacitor may be as high as 3Ω.

Connection Diagram and Ordering Information

TO-220 Plastic Package

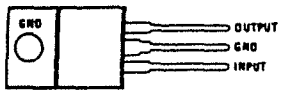

TL/H/11280-2

Front View

Order Number LM2937ET-5.0, LM2937ET-8.0, LM2937ET-10, LM2937ET-12, or LM2937ET-15
See NS Package Number T03B

PEER REVIEW DOCUMENTATION

PROJECT AND DOCUMENT INFORMATION

Project Name Air Concentration Meter WOID ER657

Document Project Notes 8450-98-01 Air Concentration Meter Electronics Package Manual

Document Date October 1997 Date Transmitted to Client NOV 12 1997

Team Leader Kathy Frizell Leadership Team Member _____
(Peer Reviewer of Peer Review/QA Plan)

Peer Reviewer _____ Document Author(s)/Preparer(s) Malin L. Jacobs

REVIEW REQUIREMENT

Part A: Document Does Not Require Peer Review

Explain _____

Part B: Document Requires Peer Review: SCOPE OF PEER REVIEW

Peer Review restricted to the following Items/Section(s): Reviewer:

Technical adequacy — Phil Atwater

Group policies — Bert Milano

REVIEW CERTIFICATION

Peer Reviewer - I have reviewed the assigned Items/Section(s) noted for the above document and believe them to be in accordance with the project requirements, standards of the profession, and Reclamation policy.

Reviewer: Phil Atwater Review Date: 11/3/97
Signature

Reviewer: Bert Milano Review Date: 11/4/97
Signature

Preparer - I have discussed the above document and review requirements with the Peer Reviewer and believe that this review is completed, and that the document will meet the requirements of the project.

Team Member: Malin L. Jacobs Date: 11/3/97
Signature