MULTIPORT SLEEVE VALVE DEVELOPMENT AND APPLICATION

BY

PHILLIP H. BURGI, EDWARD O. GREEN, AND RAOUL E. THIBAULT

A.S.C.E.

JOURNAL OF THE HYDRAULICS DIVISION
JANUARY 1981

JOURNAL OF THE
HYDRAULICS DIVISION

MULTIPORT SLEEVE VALVE DEVELOPMENT AND APPLICATION

By Philip H. Burgi,[1] Edward O. Green,[2] and Raoul E. Thibault[3]

INTRODUCTION

The design and construction of long aqueducts to supply municipal and industrial water have presented the need to develop a control valve and energy dissipator that would be compatible with the aqueduct system. A valve design is needed that will: (1) Adequately dissipate high energy flow at small discharges; and (2) pass the maximum design flow with a minimum of energy loss. The aqueduct would dissipate the majority of available energy in line losses when operating under full design discharge flow conditions and the control valve would dissipate the majority of excess energy when operating under a low-flow condition.

Flow control stations on many long aqueducts have generally been limited to pressure head differentials of approximately 15 m. This head restriction resulted from the cavitation damage associated with the use of butterfly valves when used for throttling at high head differentials. If a valve and associated energy dissipator could be developed to accommodate pressure head differentials exceeding 15 m, the number of "control stations" required along an aqueduct could be reduced, resulting in significant cost savings. With these needs in mind, the Division of Research and the Division of Design at the Bureau of Reclamation's (now Water and Power Resources Service) Engineering and Research Center, in Denver, Colo., initiated a research program in 1972 to develop a more versatile control valve and energy dissipator.

[1]Hydr. Engr., United States Dept. of Interior, Water and Power Resources Service, Engrg. and Research Center, P.O. Box 25007, Building 67, Denver Federal Center, Denver, Colo. 80225.

[2]Retired; formerly Supervisory Mech. Engr., United States Bureau of Reclamation, Denver, Colo.

[3]Supervisory Civ. Engr., United States Dept. of Interior, Water and Power Resources Service, Engrg. and Research Center, P.O. Box 25007, Building 67, Denver Federal Center, Denver, Colo. 80225.

Note.—Discussion open until June 1, 1981. To extend the closing date one month, a written request must be filed with the Manager of Technical and Professional Publications, ASCE. Manuscript was submitted for review for possible publication on March 12, 1980. This paper is part of the Journal of the Hydraulics Division, Proceedings of the American Society of Civil Engineers, © ASCE, Vol. 107, No. HY1, January, 1981. ISSN 0044-796X/81/0001-0095/$01.00.

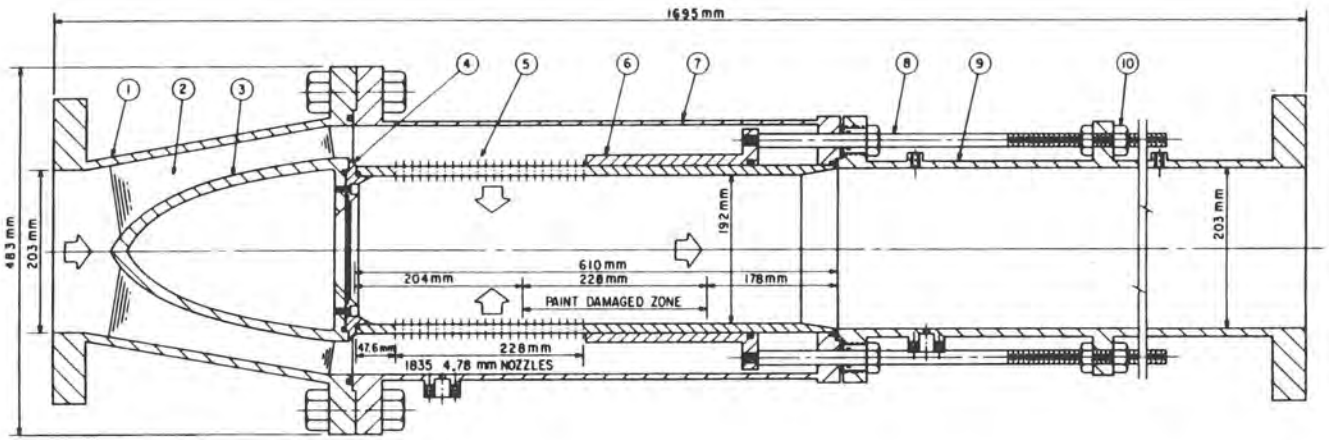

VALVE PARTS LIST

1	UPSTREAM BODY
2	SUPPORT FIN
3	CONE
4	SEAT RING
5	PERFORATED SLEEVE
6	CONTROL SLEEVE
7	MAIN BODY
8	OPERATING STEM
9	DOWNSTREAM BODY
10	OPERATING NUTS

203 mm BAILEY POLYJET VALVE
(1mm = 0.0394 in)

FIG. 1 - 200 mm Bailey Polyjet Valve

On Nov. 6, 1979, the Bureau of Reclamation was renamed the Water and Power Resources Service of the U.S. Department of the Interior. The new name more closely identifies the agency with its principal functions—supplying water and power. Some of the references listed in this paper were prepared prior to adoption of the new name; all references to the Bureau of Reclamation or any derivative thereof are to be considered synonymous with the Water and Power Resources Service.

This paper presents the laboratory results of tests conducted to determine the discharge coefficients and overall valve performance of two 200-mm sleeve valves. The essential components of a sleeve valve are two concentric cylinders. One cylinder is stationary and the other serves as a control sleeve traveling

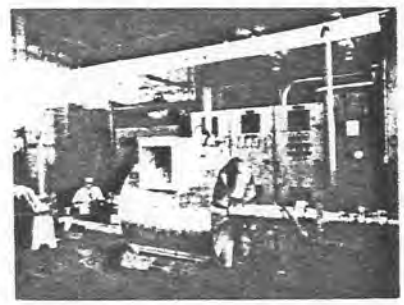

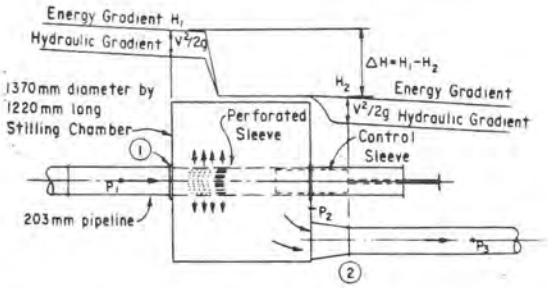

FIG. 2.—200-mm Horizontal Multijet Sleeve Valve

across the open ports of the stationary cylinder. The first valve tested was the Bailey Polyjet valve. As can be seen in Fig. 1 the control for the Bailey valve consists of a cylindrical sleeve that travels over a smaller diameter stationary cylinder with regulating ports. The second valve tested was the horizontal multiport sleeve valve developed in the laboratory, Fig. 2. The outer cylinder of this valve is fixed and contains the regulating ports; the inner, smaller diameter movable cylinder is the control sleeve.

Application of Multiport Sleeve Valves

Previous studies (2) on a 50-mm model of a multiport sleeve valve and a vertical stilling well indicated that such a valve could meet the control requirements noted previously. In a study reported by Miller (6), Glenfield and Kennedy,

Ltd., described a submerged valve similar to the Wanship sleeve valve (4 They developed a new device which could be attached to their standard sleev valve resulting in a ported sleeve valve. Miller also noted an improvement energy dissipation resulting from the small individual jets leaving the valve.

The MWD (Metropolitan Water District) of Southern California (5) conducte tests on an improved submerged discharge valve (without ports), but foun that at pressure heads in excess of 30 m, cavitation damage occurred on th bottom plate of the valve and edges of the control sleeve. To develop a val that could control high energy flows, the concept of flow nozzles was use MWD engineers developed an outer sleeve containing a large number of sm nozzles and attached it to a sleeve valve under study. The nozzles produ a flow acceleration through the outer sleeve; thus cavitation does not occ in the metal flow passages. As the jets exit the valve, cavitation occurs the water surrounding the valve and not against the flow surfaces. The develo mental stages of the MWD "multijet" sleeve valve design were summariz by Watson (9).

The multiport sleeve valve is quite versatile from the designer's point view. The ports can be designed to meet almost any hydraulic requiremen It can regulate flows from fine regulation of small discharges to maximum flo with minimum pressure head loss. The physical arrangement of the valve c be varied to meet a wide range of installation requirements. It is adaptab to various types of operating mechanisms with different mounting positio The sleeve valve can operate over a wide range of pressure heads includi a wide variation at any given installation.

The multiport sleeve valve is designed for use on water pipeline pressu systems where the differential head across the valve at low and intermedi flows usually produces cavitation damage in other types of valves. What th in effect, means is that the back pressure on the downstream side of the slee valve can be relatively small, just enough to keep the valve submerged wh the pressure on the upstream side of the valve can be quite high.

In addition to eliminating valve damage from cavitation, the multiport sle valve also offers another major advantage in that, at full flow, head loss throu the entire valve structure can be as small as 1.5 m. The low head loss featu can yield significant savings in costs of pipe. The ability to dissipate high-press heads enables the designer to use fewer rate-of-flow control stations along aqueduct.

The multiport concept of valve control has permitted designers to consi controlling high-pressure head flows, ranging from 150 to 300 m at one installati Previously, such high-pressure head flow was controlled using several st of energy reduction to prevent cavitation damage to the control valves.

Hydraulic Considerations

Two appealing flow characteristics of a valve using the multiport con are:

1. The flow and energy are dissipated quite rapidly upon leaving the va thus requiring a relatively small energy dissipation structure.
2. The inevitable process of formation and collapse of cavitation bub

occurs during throttling of high energy flow, can be controlled to occur in the water surrounding the valve and not against the flow surfaces of the valve or energy dissipation chamber.

velocity deceleration rate is related to port size. The location of "the cavitation bubble collapse zone" is related to the port exit shape and its relative proximity to other ports. Fig. 3 shows the flow pattern developed by a submerged jet (1). Albertson (1) and Yevdjevich (11) examined the characteristics of a submerged jet. Albertson described the phenomena as two stages: zone of flow establishment and zone of established flow. In the zone of flow establishment, the core of the submerged jet is penetrated by viscous shear until the center-line velocity begins to decrease. Thus the jet decelerates while the fluid surrounding the jet gradually accelerates. The zone of established flow is defined as that

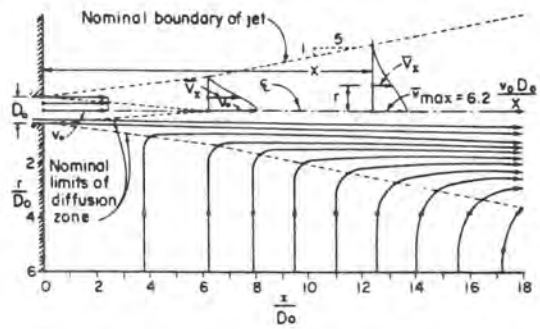

FIG. 3.—Submerged Jet Flow Patterns

zone where the entire jet becomes turbulent and the center-line velocity begins to decelerate. The center-line velocity V_m is defined by Albertson as

$$V_m = 2.28\, V_o \sqrt{\frac{B_o}{X}} \quad \text{(slotted port)} \qquad (1)$$

$$V_m = 6.2\, V_o \frac{D_o}{X} \quad \text{(circular port)} \qquad (2)$$

in which V_m = jet center-line velocity at distance X; V_o = jet exit velocity $= C_d\sqrt{2g\Delta H}$; B_o = slot width; D_o = circular port diameter; X = distance from exit port along jet center line; C_d = discharge coefficient of port; and ΔH = pressure head differential across port.

From Eq. 2 it is evident that for a circular port, the distance X from the port, needed to reduce the jet velocity V_m to a certain fraction of the jet exit velocity V_o, is directly related to the port diameter D_o. Thus a reduction in port diameter by one-half would reduce the distance X required to produce the same center-line velocity V_m by one-half. Ports as small as 3.2 mm have been used on some multiport valves. Therefore, for a head of 150 m, the jet velocity could be reduced from 51 m/s at the exit port to 4.0 m/s in a distance of 50 mm, using a 3.2-mm-diam port.

Hydraulic Laboratory Testing.—The Water and Power Resources Servi Hydraulic Laboratory's high head test facility was used for laboratory te of two multiport valves. The facility consists of a seven stage vertical turbi pump driven by a 186-kW d-c motor. The rectifying unit and motor speed cont converts a-c into d-c. needed for the motor and provides speed selection fr 200 to 1,800 rpm. Rate of flow is measured with a 200-mm venturi me permanently installed 3 m downstream from the pump outlet. A 200-m motor-operated valve was used to control the downstream pressure on the t valve.

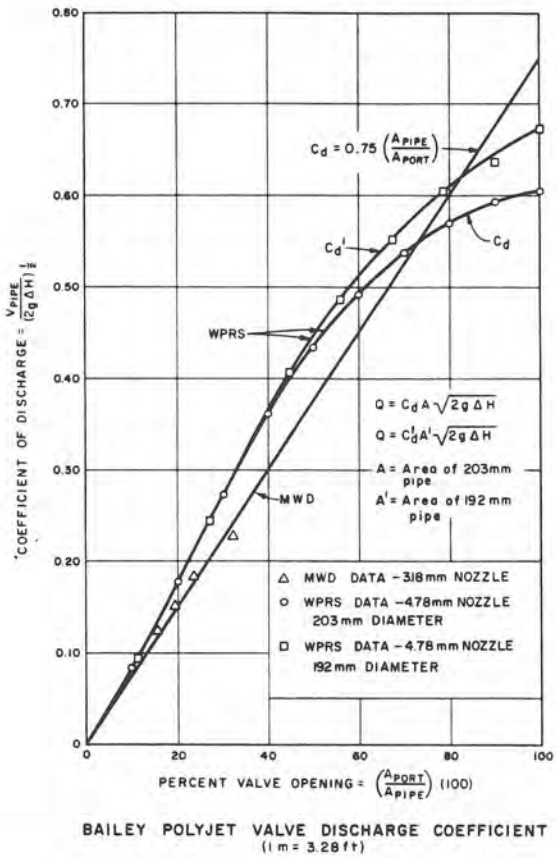

FIG. 4.—Bailey Polyjet Valve Discharge Coefficient

Bailey Polyjet Valve.—Tests were conducted on a 200-mm test valve provi by the Chas. M. Bailey Co., Inc., 1301 59th Street, Emeryville, Calif. 94 (Fig. 1). The purpose of the test was to determine the performance characteris of the valve under the two operating conditions previously discussed; nam energy dissipation at low-flow conditions and minimal energy loss at de flows.

The control for the Bailey valve consists of a cylindrical sleeve located inside the annular chamber of the valve that travels over the ports. Movement of the sleeve controls the open port area and, thus, the valve discharge. The flow passes inward through the 1,835, 4.78-mm ports, then along the inside of the perforated sleeve into the downstream pipe, which is the same diameter as the inlet pipe.

Tests were conducted to determine the discharge coefficient, C_d, for the Bailey valve. The discharge coefficient curves based on the 203-mm-diam pipe flow area and the 192-mm-diam perforated sleeve area are shown in Fig. 4. Since all 1,835 ports were the same size and configuration, it would appear that the overall valve flow characteristics would be the same as the local flow characteristics of each port. This would result in a linear relationship between the valve coefficient of discharge C_d and the area ratio: A_{port}/A_{pipe}. As indicated on Fig. 4, this was not the case. Test results conducted by the MWD of Southern California (10) on a similar 200-mm polyjet valve are included in Fig. 4.

As the control sleeve is opened, exposing more ports, the flow near the upstream end of the perforated sleeve passes the upstream ports in an effort to satisfy the downstream flow demand. The resultant approach velocity and pressure drop near the upstream ports causes a reduction in the flow through these ports. This phenomenon is similar to that which occurs in manifold pipes.

TABLE 1.—Bailey Polyjet Valve Test Data

Valve opening, in percent (1)	H_u, in meters (2)	H_d, in meters (3)	Q, in cubic meters per second (4)	V, in meters per second (5)	Cavitation index = σ* (6)	Time, in hours (7)
5	136	2.19	0.066	2.04	0.08	2.0
10	107	5.85	0.122	3.78	0.14	2.0
15	70.1	4.18	0.151	4.66	0.19	2.0
20	46.0	4.15	0.167	5.15	0.30	1.5
30	25.3	4.05	0.171	5.27	0.59	2.0

*$\sigma = (H_d - H_v)/(H_u - H_d)$; $H_v = -8.47$ m (atmospheric pressure at the Water and Power Resources Service test facility); and H_d = downstream pressure head.

To evaluate potential cavitation damage to the 200-mm polyjet test valve, the inside flow surfaces of the ported sleeve were painted with a white concrete curing compound. In earlier tests concrete curing compound proved to be an excellent indicator of the location and degree of pitting of a metal surface resulting from cavitation bubble collapse. Table 1 presents the test data for the polyjet valve for sleeve openings of 5, 10, 15, 20, and 30%. Pressure head on the valve was measured 1.83 m upstream (H_u) and 1.73 m downstream (H_d) from the valve. The vapor pressure H_v at the Water and Power Resources Service laboratory elevation is equivalent to -8.47 m of water.

The high head vertical turbine pump head was designed to deliver a maximum flow of approximately 0.17 m^3/s. Therefore, the cavitation damage tests were limited to valve openings between 5 and 30% and cavitation index, $\sigma = (H_d - H_v)/(H_u - H_d)$, values ranging from 0.08 to 0.59, respectively. Fig. 5 shows

the resulting paint removal (small pockmarks) on the internal flow surfaces of the ported sleeve under the 15% valve opening test condition described in Table 1. The photograph shows cumulative damage from the 5% opening up to and including the 15% open level. (The scratch lines on the paint in the damaged area were caused by insertion of a mirror for photographs.)

The cavitation damage shown on Fig. 5 is typical of locations where individual cavities implode near the flow surface. The damage was located in a zone which extended 152 mm downstream from the ports to 76 mm into the port zone, Fig. 1. Although the valve was operated at an extremely low sigma value (σ = 0.08) for the 5% test, there was no apparent cavitation damage. The majority of paint removal occurred at the 10 and 15% valve openings. Results

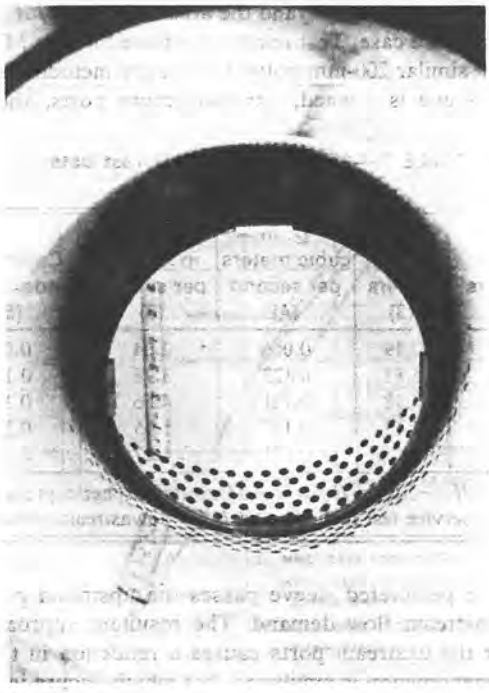

FIG. 5.—Looking Upstream at Ported Sleeve Valve Surface

indicate that the cavitation damage in the test of this particular valve is related to the quantity of vapor bubbles produced as well as the pressure head relationship. The amount of paint removal would increase for greater valve openings at low sigma values. However, on long pipelines, the majority of the energy head would be dissipated in upstream pipe losses at larger valve openings, resulting in higher sigma values with less cavitation potential. It is most likely that the critical point, with respect to cavitation damage for polyjet valves on long aqueducts with high friction losses, will be in the range of 10 to 15% open. In general, the polyjet valve performed well when operated within the manufacturer's suggested pressure head ranges.

Horizontal Multiport Sleeve Valves.—Prior to the tests described here

tiport sleeve valve designs could not be found that fully satisfied the design eria desired by the Service, that is, a valve that will dissipate high energy ve in a low-flow condition and deliver design flows with a minimum energy at the valve. Although previous designs function quite well as pressure-ucing valves, most do not emphasize minimal energy loss when delivering ign flows.

The 200 mm laboratory test valve discharged into a 1,370-mm-diam, 1,220-mm- stilling chamber. The basic concept of the valve and stilling chamber is strated in Fig. 2. Flow enters the valve from the high-pressure side and discharged outward through the perforated body of the valve into the stilling mber. A cylindrical sleeve located inside the valve body travels over the rforated section of the valve, controlling the port area and thus the valve charge. The flow is discharged into the downstream pipeline at the lower d of the stilling chamber.

The concept of a linear relationship between sleeve travel and valve discharge s also sought as a desired characteristic in the new design. Such a valve ould provide better control characteristics on long aqueducts where water mmer presents a potential problem. Fig. 6 shows ideal valve characteristics

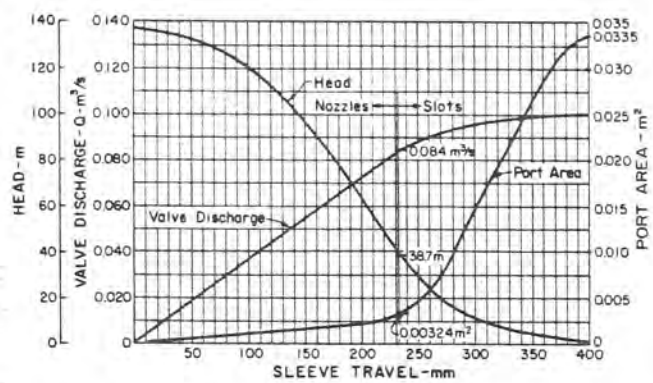

FIG. 6.—Ideal Multijet Sleeve Valve Characteristics

a function of sleeve travel for a 200-mm pipeline where the static upstream ressure head is 137 m. A 200-mm-horizontal multiport sleeve valve with nozzles d slots for ports is proposed. As the valve is opened and the port area slowly creases, the valve discharge increases linearly with sleeve travel. This increase valve discharge results in a reduced upstream pressure head due to friction ses in the long aqueduct. When the valve sleeve has been opened 230 mm, has completed the function of a pressure reducing valve and assumes the of a low-head-loss control valve. At this point the valve port area increases idly with sleeve travel but this produces a diminishing increase in discharge to the low available pressure head across the valve. When the valve port equals the 200-mm pipe area, the pressure head differential, ΔH, has creased to 1.1 m across the valve, resulting in a discharge coefficient C_d approximately

$$C_d = \frac{\frac{Q}{A}}{\sqrt{2g\Delta H}} = 0.68 \quad (3)$$

in which Q = valve discharge; A = port area; and ΔH = pressure head differential across the valve. The key to the multiport design is the proper placement of the ports along the several turns of a spiral that extends along the length of the valve to produce a nearly linear relationship between the valve discharge and travel.

Pressure heads were measured at pressure taps P_1, P_2, and P_3 (Fig. 2) and corrected for a pressure differential, ΔH, between the upstream flange of the sleeve valve, H_1, and the downstream 200-mm pipe flange, H_2. Eqs. 4 and 5 were used to calculate the discharge through the nozzles and slots, respectively

$$Q_n = C_n A_n \sqrt{2g\Delta h} \quad (4)$$

$$Q_s = C_s A_s \sqrt{2gH} \quad (5)$$

$$C_n = 0.94 \left[1 - \frac{\left(\frac{V + V'}{2}\right)^2}{2gH} \right] \quad (6)$$

$$C_s = 0.85 \left[1 - \frac{\left(\frac{V'}{2}\right)^2}{2gH} \right] \quad (7)$$

in which Q_n = nozzle discharge; Q_s = slot discharge; A_n = open nozzle area; A_s = open slot area; Δh = pressure head difference between valve and stilling chamber; A_p = pipe inlet area; $V = Q/A_p$; $V' = (Q - Q_n)/A_p$; and $H = \Delta h + V^2/2g$.

When the nozzles alone are exposed, the velocity term on the right side of Eq. 6 is negligible since the velocity head is small with respect to the total available energy, H. As the control sleeve opens, the total energy term decreases due to friction losses in the upstream aqueduct, and the velocity term increases. Thus the nozzle and slot coefficients, C_n and C_s, decrease in value to reflect the phenomena of a manifold where the majority of the valve discharge is released through the downstream ports of the valve.

Eqs. 6 and 7 are similar to the equations presented by Vigander (8) and Enger (3) dealing with large diffusers and manifolds. They are empirical equations based on the results of laboratory studies conducted on the 200-mm test valves.

The investigation included studies conducted on the two-ported (nozzle and slots) valve sleeve shown in Fig. 7. The sleeve travel versus port area relationship curves for the two configurations and the polyjet valve are shown in Fig. 8. The Bailey polyjet valve has a linear relationship between port area and sleeve travel. The area for the slotted port configuration increases at a somewhat slower rate initially. The area for the valve with nozzles and slots increases very slowly at the start of the sleeve travel and then rapidly increases once

slots are exposed, yielding a linear relationship between the sleeve travel and valve discharge.

The use of nozzles or orifices for the discharge ports should be carefully considered. The present spiral arrangement of the ports results in the partial blockage of some of the ports when the valve is used to control the flow. Further laboratory investigations should be conducted to determine the pressure head-nozzle diameter relationship where cavitation occurs in large nozzle flow passages. Until such laboratory investigations have been conducted, it is suggested that an orifice design [similar to that shown in Fig. 7(*b*)] instead of the nozzle design be considered for ports 19 mm in diameter or larger (2).

Data for the head loss coefficient K are plotted with respect to percent valve

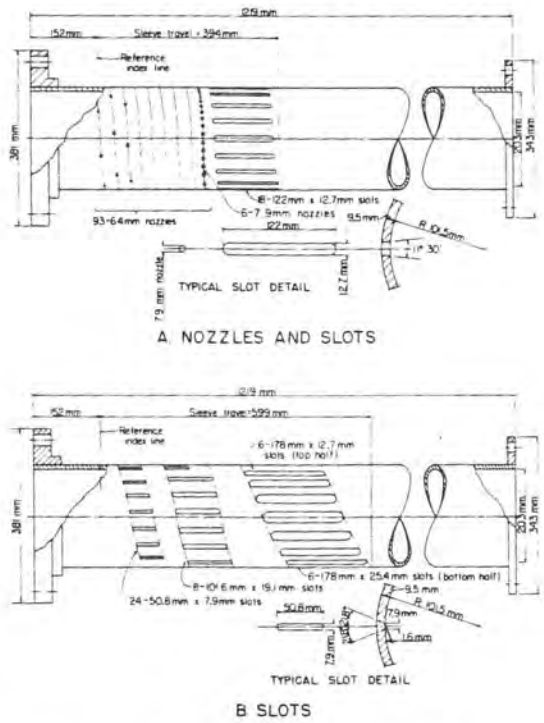

FIG. 7.—Dimensional Sketches of Ported Valve Sleeves

opening (100 × port area/pipe area) on Fig. 9 for both port configurations shown in Fig. 7. The head loss coefficient K is based on the pressure head differential, ΔH, between the upstream valve flange and the 200-mm pipe flange downstream of the stilling chamber. The loss coefficient, therefore, includes the total system loss for the control structure. The Bailey polyjet valve data are also plotted on Fig. 9.

Computer Model.—Presently, multiport sleeve valve designs include a large number of apertures in the valve body. To reduce manufacturing costs and to obtain a better flow control characteristic, the Service's sleeve valve design utilizes the fact that pipe friction head losses can be approximated for various

flows by using the equation $H_f = KQ^2$, in which K = constant for a particular pipeline and $Q = CA\sqrt{2gH}$. Using this approach, a computer program (2) (U.S. customary units) has been developed to locate and space nozzles along

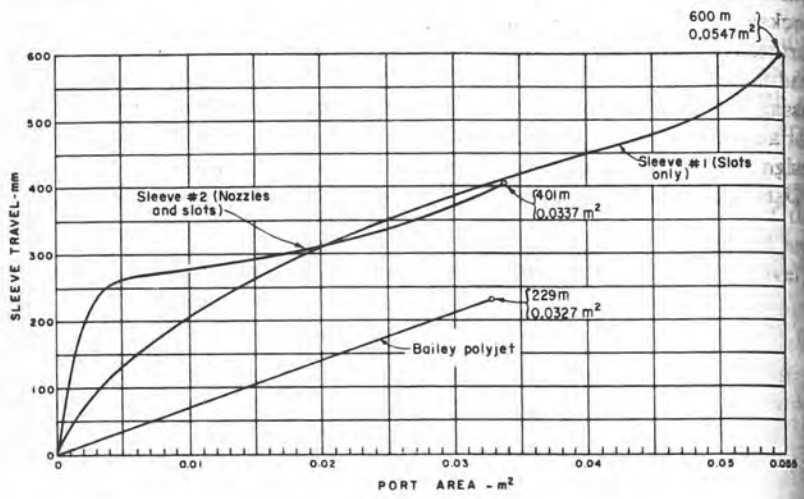

FIG. 8.—Sleeve Travel Versus Port Area

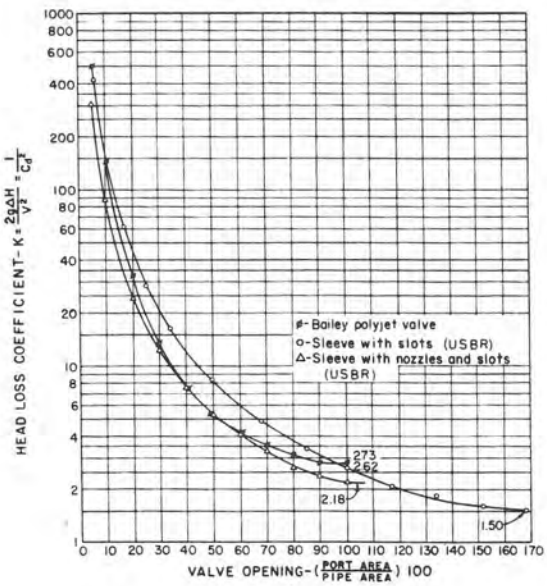

FIG. 9.—Head Loss Coefficient

a spiral around the valve body such that a linear change in flow is maintained through the zone of the nozzles. As the control sleeve is retracted to expose more apertures, the number and/or diameter of the nozzles is increased and

largest diameter nozzle is equal to the wall thickness of the valve body. When a point is reached where the computed number of nozzles cannot meet the minimum spacing requirements along the spiral in a quadrant that is being incremented, then the program automatically changes its output from nozzles to a preselected number of longitudinal slots. The length of the slots is computed in short intervals such that at the final length, full flow is achieved: that is, when the control sleeve is retracted past the end of the last slot [Fig. 7(*a*)]. The differential area, Aq, of each set of nozzles in a quadrant along the spiral is determined by use of the well-known orifice equation, $Q = CA\sqrt{2g\Delta H}$. The linear change in flow is obtained by setting a uniform rate of change between spiral peaks; hence the change for a quadrant can be calculated. Rewriting the orifice equation, we have

$$A_t = \frac{Q_n}{C_n\sqrt{2g\Delta H}} \qquad (8)$$

in which Q_n = the theoretical flow (in cubic feet per second) through the nozzles based on the control sleeve travel from the reference index line [Fig. 7(*a*)]; $C_n = 0.94$, a value which remains constant until slots are included in the output; $2g = 64.32$ ft/s^2; ΔH = differential head in feet across the sleeve valve for the quadrant being incremented. (For each quadrant, ΔH is reduced by the total pipe friction for the reach being considered. Since Q is a function of distance from the reference index line and $H_f = KQ^2$, then $H = H_{static} - KQ^2$); and A_t = the total amount of nozzle area in square feet required to pass flow Q_n.

From this relationship, A_q for the quadrant being incremented can be obtained by subtracting the total area, A_n, of the nozzles in the preceding quadrants from A_t. Because A_q will not exactly match with the sum of the areas of the nozzles that can be used in a quadrant, the small excess area is added to the calculated area for the next quadrant before its number of nozzles is computed. The physical model test program was used to evaluate the empirical coefficients used and has produced good agreement with discharges indicated in the computer model. The linear change in Q is maintained until the control sleeve is retracted to the zone of the slots. At this point, flow is approximately 82% of the design flow. The end result is a valve which can achieve design flow with a much smaller number of apertures. It is hoped that physical model testing can be continued to evaluate larger design flows where two or more multiport sleeve valves would be required in a flow control structure.

Mechanical Considerations.—The heart of the sleeve valve is two concentric cylinders. The outer cylinder or body is fixed and contains the regulating ports; the inner, unperforated movable cylinder is the control sleeve. It fits closely inside the body and is moved longitudinally to cover and uncover the ports providing regulation of flow. Minimal practical clearances are provided between the body and sleeve to control leakage. No seals or packings have been used on the sleeve. A guard valve upstream of the sleeve valve provides tight shutoff when no flow is desired and the sleeve valve is closed. If minimal leakage is important, piston rings are provided on the sleeve. The Metropolitan Water District of Southern California designed their valves for tight closure (5,9). Packings are provided on the end of the sleeve which does not move across

the regulating ports and a fixed seal is mounted in the body to seal the oth end of the sleeve when the valve is closed.

The valve ports can be varied in size, type, and spacing to meet a wi range of requirements. According to MWD round nozzles are limited in si as their diameter cannot be larger than the body shell thickness because changes which occur in jet characteristics. Because of the limitation on siz a large number of nozzles is required. Ports can be machined as slots wi the same taper as the round nozzles. The width of the slots has the sam limitations as the diameter of the nozzles with respect to cavitation damag and the length is limited by the physical strength of the body shell. Becau of the taper, these ports must be reamed from the inside of the cylindri body. This is a difficult and expensive machining process. A 200-mm val is considered the smallest that can be machined from the inside.

In river or reservoir outlet work installations where the water may car debris large enough to plug the nozzle-type ports, ports that are designed sharp-edged orifices are utilized. These ports have parallel sides for the fi 1.5 to 7 mm of depth from the inside of the body [Fig. 7(*b*)]. To elimin any possibility of cavitation on the sides of the port, the remainder of t port is flared out at a 45° angle.

The size and shape of the ports can be specified to suit specific requiremen Port shapes have been made round, oblong, and longitudinal. In general, t size of a port is limited by the physical strength of the body shell. Howeve the larger the port, and in turn the jet, the greater the outward distan (perpendicular to the valve body) that is required to dissipate the energy the jet. For this reason, the ports should be kept as small as practicable consiste with the size of expected debris that must be passed.

Port size and spacing may be varied to meet specific hydraulic requirement As noted previously, valves used in long municipal-industrial pipelines ga benefits from linear discharge characteristics even though the effective ener head at the valve drops rapidly as the discharge increases. It has already bee shown that this requirement can be easily met by varying spacing and si of the nozzles and, when effective head drops sufficiently, changing to slo This general principle can be used for other discharge characteristics. As example, valves requiring fine regulation of small off-season discharge can ha a few small ports as required for the off-season releases. The remainder the ports can be longer and spaced closer together to give needed regulati of normal releases with minimum sleeve travel. As port size increases, it necessary to place ports diametrically opposite to maintain hydraulic balan of the valve.

The sleeve valve lends itself to many physical arrangements. The most effic and straightforward is the horizontal valve of the general type used in the Serv laboratory test and shown in Fig. 2. In this type, the stem attached to t control sleeve is extended downstream through packings to the valve opera Thus all moving parts of the sleeve are downstream of and unaffected by t water flow. The sleeve is hydraulically balanced. The only unbalance is hydraulic load on the valve stem. Since this stem load and friction are only loads to be overcome, the operating mechanisms can be relatively sma

Sleeve valves are adaptable to many types of operating mechanisms. Service has used a gear type with torque-limiting switches, hydraulic cylin

and even a hand-operated gear lift for a remote installation without power.

A vertical arrangement has been used for some valves with the flow being discharged downward into a square stilling well (Fig. 10). This is a good arrangement for valves with large ports as the distance required to dissipate the jet energy is much greater. The bottom of the stilling well and the lower walls should be steel lined and the well sized to allow jet velocities as high as 12 m/s to impinge on the steel liner. The stilling well will very effectively dissipate the remaining energy of the jets. However, with this arrangement the incoming water flow must pass through a 90° elbow and the valve operator

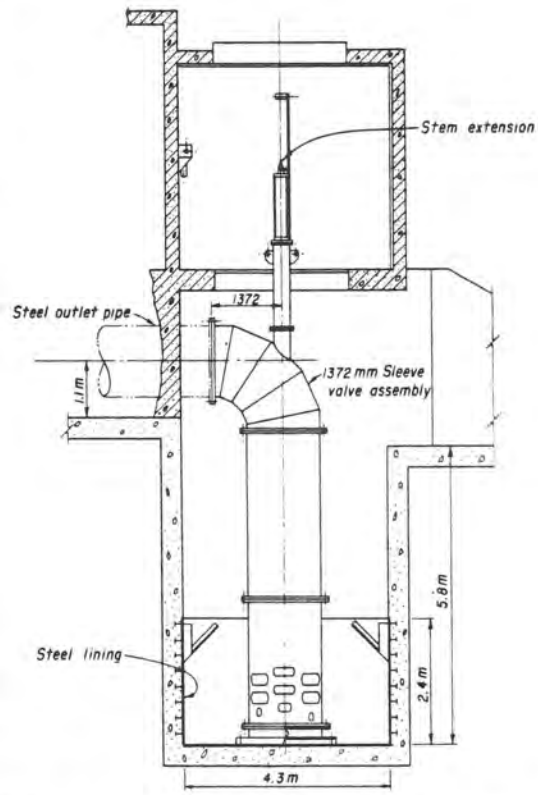

FIG. 10.—Typical Multiport Sleeve Valve in Vertical Stilling Well

is mounted on top of the elbow. Thus the control stem is in the water passage and the water must flow through the inside of the control sleeve. The valve interior must be streamlined to impede water flow as little as practical and to provide adequate support to the stem. The Service's experience has shown that vibrations can cause fatigue and breaking of a stem. Flow velocity through the elbow and sleeve must be kept low and, when at maximum valve opening, should not exceed 11 m/s.

From the mechanical standpoint, sleeve valves are fairly simple devices. However, there are features that prevent them from being classified as inexpen-

sive. The body, sleeve, and stem must be made from corrosion-resistant materi The sleeve and body must be carefully and closely fitted. As noted befo the ports are difficult and expensive to machine. The stainless steel body a creates a machining problem.

Prototype Installations and Experience

A 356-mm-diam prototype horizontal multiport sleeve valve has be installed in the Deep Red Run rate-of-flow control station near the end of Frederick Aqueduct of the Service's Altus Project in Oklahoma. The val is designed for $Q = 0.23\ m^3/s$ with a static head at no flow of 70 m. Fro the Frederick regulating tank which is located upstream of the valve, the is a gravity flow-pressure pipeline consisting of 5.52 km of 610-mm pipe, km of 458-mm pipe, and 3.8 km of 406-mm pipe. The multiport sleeve val has allowed the designers to use one rate-of-flow control station in lieu four which would incorporate butterfly valve type rate-of-flow controllers. is estimated that savings resulting from elimination of three flow control statio are well above $200,000. Field testing of the prototype valve is planned the near future.

Several large (1,372 mm) multiport sleeve valves (Fig. 10) have been design for control of flow in vertical stilling wells. These valves have circular elliptical-shaped ports with diameters up to 305 mm. Installations are plann for the Mt. Elbert Aqueduct in Colorado and Sugar Pine Dam River out works in California.

Conclusions

1. Laboratory tests were conducted on a 200-mm polyjet valve. The val performed well when operated within the manufacturer's suggested pressu head ranges. However, the multiport sleeve valve design will be used by t Water and Power Resources Service for those applications where operati may be intermittently outside the suggested pressure head range for the poly valve.

2. Physical and mathematical models have been used to develop a horizont multiport sleeve valve design for use as a flow controller on long aquedu systems.

3. The design of the multiport sleeve valve is quite versatile and can used in a wide variety of flow regulation situations.

Appendix I.—References

1. Albertson, M. L., Dai, Y. B., Jensen, R. A., and Rouse, H., "Diffusion of Submer Jets," *Transactions*, ASCE, Vol. 115, Paper No. 2409, 1950, p. 639.
2. Burgi, P. H., "Hydraulic Model Studies of Vertical Stilling Wells," *REC-ERC-73* Bureau of Reclamation, Denver, Colo., Feb., 1973.
3. Enger, M. C., and Levy, M. L., "Pressure in Manifold Pipes," *Journal Americ Water Works Association*, Vol. 21, Mar., 1929, p. 659.
4. Falvey, H. T., "Hydraulic Model Studies of the Wanship Dam Vertical Stilling We Weber Basin Project, Utah," *Report No. Hyd-481*, Bureau of Reclamation, Denve Colo., Jan., 1962.
5. Johnson, D., "Sleeve Valves," Institute on *Control of Flow in Closed Cond*

Colorado State University, Fort Collins, Colo., Aug., 9–14, 1970, (published 1971).
Miller, E., "The Submerged Discharge Valve," *Glenfield Gazette*, No. 229, Feb., 1969.
Rouse, H., "Jet Diffusion and Cavitation," *Journal of the Boston Society of Civil Engineers*, Vol. 53, No. 3, 1966.
Vigander, S., Elder, R. A., and Brooks, N. H., "Internal Hydraulics of Thermal Discharge Diffusers," *Journal of the Hydraulics Division*, ASCE, Vol. 96, No. HY2, Proc. Paper 7085, Feb., 1970, pp. 509–527.
Watson, W. W., "Evolution of Multijet Sleeve Valve," *Journal of the Hydraulics Division*, ASCE, Vol. 103, No. HY6, Proc. Paper 13006, June, 1977, pp. 617–631.
Winn, W. P., "Test and Evaluation of 8-inch Bailey Polyjet Valve," Report No. 874, Metropolitan Water District of Southern California, Oct., 1970.
Yevdjevich, V. M., "Diffusion of Slot Jets with Finite Orifice Length-Width Ratios," *Colorado State University Hydraulics Paper No. 2*, Dec., 1965.

Appendix II.—Notation

The following symbols are used in this paper:

A_n = nozzle port area;
A_p = pipe inlet area;
A_q = quadrant port area;
A_s = slot port area;
A_t = total port area;
B_s = slot width;
C_d = discharge coefficient;
C_n = nozzle discharge coefficient;
C_s = slot discharge coefficient;
D_n = circular port diameter;
g = gravitational acceleration;
ΔH = pressure head differential across port;
Δh = pressure head differential between valve and stilling chamber;
Q = valve discharge;
Q_n = nozzle discharge;
Q_s = slot discharge;
V = Q/A_p;
V_o = jet exit velocity;
V_m = jet center line velocity at distance X;
V' = $(Q - Q_n)/A_p$;
X = distance from exit port along jet center line; and
σ = cavitation index.