PAP-416

Intakes and Outlets for Low-Head Hydropower[a]

By Clifford A. Pugh,[1] A. M. ASCE

Introduction

The need for additional energy production in the United States has resulted in increased interest in the development of remaining hydropower resources. Much of the undeveloped capacity is in the low-head range (less than about 20 m).

The main obstacle to development of low-head sites has been economics. The cost per installed kW (kilowatt) is still higher than for fossil fuel plants in most cases. However, with the cost of fuels continuing to rise, the low-head hydropower alternative is becoming more favorable.

This paper outlines present design practices regarding flow passage design to determine if standardization or design changes are possible to reduce construction costs. In low-head plants, head losses could reduce the net effective head significantly. Therefore, it would be desirable to streamline the flow passages as much as possible. At the same time, economics dictate that the flow passage should be simple and small. With these conflicting interests in mind, the present design methods were examined to determine possible design changes to simplify present designs without introducing significant additional losses.

The design of penstock entrances for high-head dams is one example that illustrates the value of taking a close look at conventional design practices. It was conservatively estimated that $13,000,000 was saved in construction costs on the penstock entrances for the Third Powerplant at Grand Coulee, by reducing the size of the bellmouth entrances (18,19). Penstock entrances have historically been designed using the same criteria used in designing high-velocity conduits, whereas the velocity in the penstocks is much lower.

This state-of-the-art survey is based on information obtained in a literature search and on comments made by manufacturers and consultants in low-head hydroelectric development.

[a]Presented at the August 8–11, 1979, ASCE Hydraulics/Energy Divisions Conference, San Francisco, Calif.

[1]Hydr. Engr., Dept. of the Interior, Bureau of Reclamation, Engrg. and Research Center, Denver, Colo.

Note.—Discussion open until February 1, 1982. To extend the closing date one month, a written request must be filed with the Manager of Technical and Professional Publications, ASCE. Manuscript was submitted for review for possible publication on October 17, 1980. This paper is part of the Journal of the Hydraulics Division, Proceedings of the American Society of Civil Engineers, ©ASCE, Vol. 107, No. HY9, September, 1981. ISSN 0044-796X/81/0009-1029/$01.00.

In the head range between 10 ft and 148 ft (3 m and 45 m), turbines with propeller-type runners are typically used (12). If the runners are adjustable, the turbines are called "Kaplan turbines." These turbines are usually arranged with a vertical shaft, a spiral case, and an elbow-type draft tube (Fig. 1).

A large percentage of present low-head turbines are this type. However, at heads less than 66 ft (20 m), axial flow turbines have proved to be more economical. This paper is mainly concerned with the low-head range, less than 66 ft (20 m).

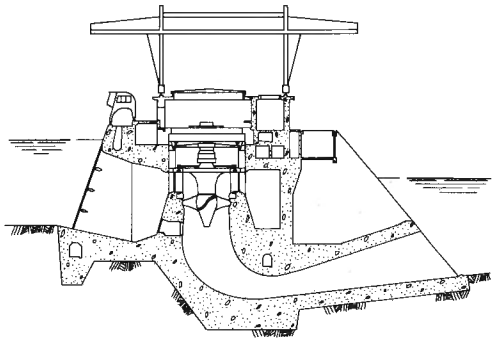

FIG. 1.—Vertical Kaplan Turbine

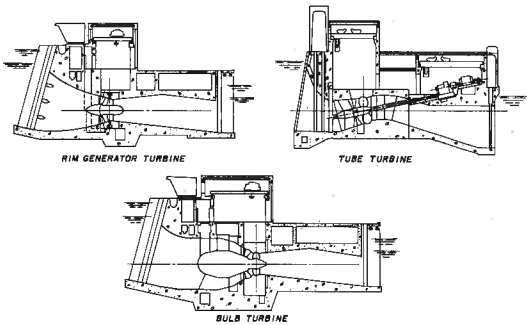

FIG. 2.—Axial Flow Turbines

Turbines in which the water is conducted to the distributor coaxially with the shaft are called "axial flow turbines" or sometimes "tubular turbines." To avoid confusion, the term "axial flow turbine" will be used in this paper. Axial flow turbines also use propeller-type runners. In some cases, adjustable (Kaplan) runners are used. The three primary types of axial flow units are shown in Fig. 2.

Package Units

A few package-type turbine and generator units are available in the low-head range. These predesigned units reduce equipment costs by eliminating the need for site-specific engineering and by using standardized manufacturing techniques. However, the standard flow passage shapes result in a loss in turbine efficiency. Butterfly valves (often used in the intake of package units) increase losses and cause an uneven flow distribution at the runner resulting in reduced operating efficiency. Standard-draft tube shapes also lead to a loss in efficiency due to sharp corners. Package units have either fixed runner blades or fixed wicket gate positions or both, resulting in less operational flexibility. The economics of each potential site should be evaluated to determine if the savings obtained with package units outweigh the losses. The following package units are presently available:

Tube Turbines

Allis-Chalmers Tube Turbine Units.—Ten standardized packaged designs are available. Single units have capacities to 6,700 hp (5,000 kW) at heads up to

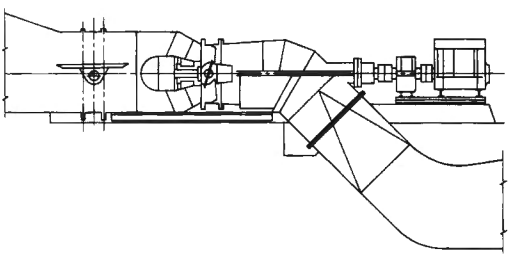

FIG. 3.—Standard Tube Turbine

49 ft (15 m). Flow is controlled with a butterfly valve in the intake. The wicket gates are fixed and the runners are either fixed or adjustable.

Karlstads Mekaniska Werkstad (KMW) Miniturbines.—These units are available for horizontal or vertical installation for flows from 35 ft^3/s–530 ft^3/s (1 m^3/s–15 m^3/s) and heads from 13 ft–82 ft (4 m–25 m). Outputs range from 134 hp–2,413 hp (100 kW–1,800 kW). The turbines have fixed guide vanes and fixed runner blades, although the position of the latter can be changed when the turbine is stationary. Flow is controlled with a butterfly valve. Fig. 3 shows a standard tube turbine.

Bulb Turbines

Fuji Package-type Bulb Turbine and Generator.—Available in 19 models covering a range of net heads from 16.4 ft–51 ft (5 m–18 m) and outputs from 402 hp–5,362 hp (300 kW–4,000 kW). The runner is of the fixed blade type and the flow is controlled with movable wicket gates. A sectional drawing of the standard bulb turbine and the generator is shown on Fig. 4.

Right Angle Drive Turbines

Neyrpic Standardized Right Angle Drive Unit.—Units vary in output from 100 kW–1,500 kW and cover a head range of 6 ft–60 ft (2 m–18 m) with discharges of 35 ft^3/s–750 ft^3/s (1 m^3/s–23 m^3/s). Flow is controlled with a downstream control gate at the end of the draft tube. Seven standard units are available with runner diameters from 18 to 71 inches (450 mm–1,800 mm). Fig. 5 shows a cross section through a right angle drive turbine.

Cross Flow Turbines

Ossberger "cross flow" turbine assemblies are available in a range of units which have the ability to cope with variations in head and discharge on small

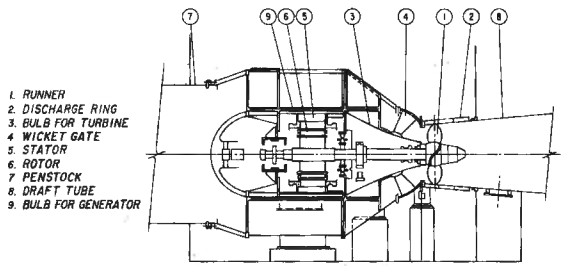

FIG. 4.—Standard Bulb Turbine

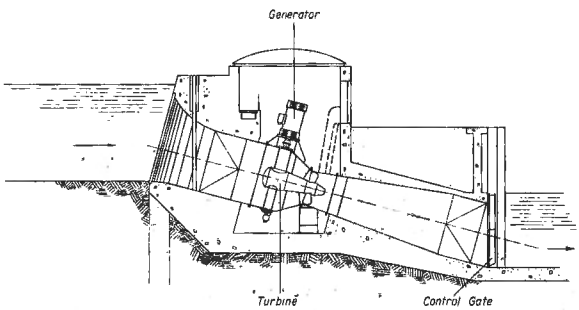

FIG. 5.—Right Angle Drive Turbine

dams. The cross flow turbine is a radial impulse-type turbine. The water is forced through a guide vane system and the blades of the cylindrical runners. The water then passes through the runners again to the outlet. Fig. 6 is a cross section through a cross flow turbine. The adjustable guide vane allows power generation from 16%–100% of design flow. Although the efficiency of this unit is not as high as for axial flow turbines, it may have widespread application to small sites where limited storage is available and flow and head vary widely.

STANDARD DIMENSIONS

A few manufacturers provide drawings with standard flow passage dimensions. These dimensions were determined as a result of model tests and their operational experience over a period of years. Fig. 7 shows a cross section and plan of

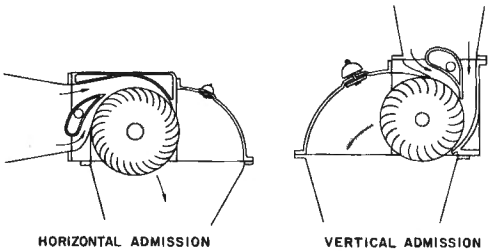

FIG. 6.—Cross-Flow Turbine

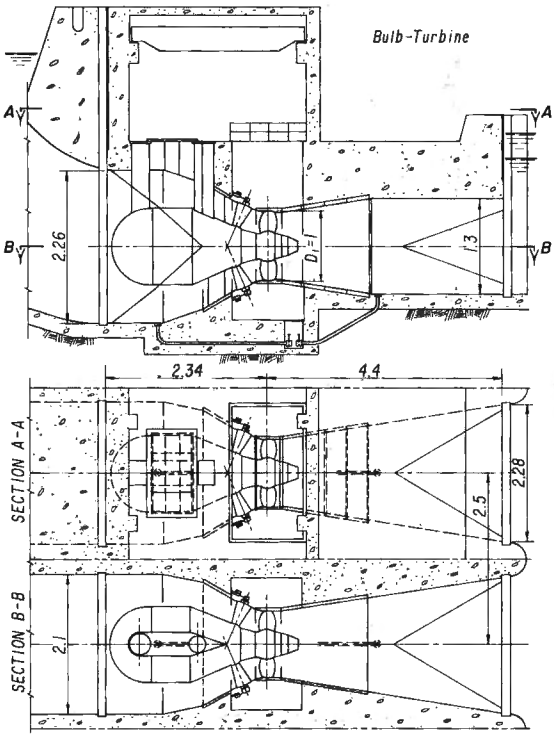

FIG. 7.—Standard Bulb Turbine Flow Passage Dimensions (Escher Wyss)

a bulb turbine according to Escher Wyss. The dimensions are given in terms of the runner diameter D-1. Fig. 8 shows Escher Wyss' standard dimensions for the "Straflo" rim-generator unit. Fig. 9 shows Fuji's standard flow passage dimensions in terms of runner diameter.

At this time there are no universally accepted flow passage shapes. Studies on optimization of flow passage shapes done by manufacturers are considered proprietary information. Therefore, the effect of simplifying intake and exit shapes on hydraulic losses is not well known. The shape of the flow passage is generally determined by the manufacturer and the standard design varies

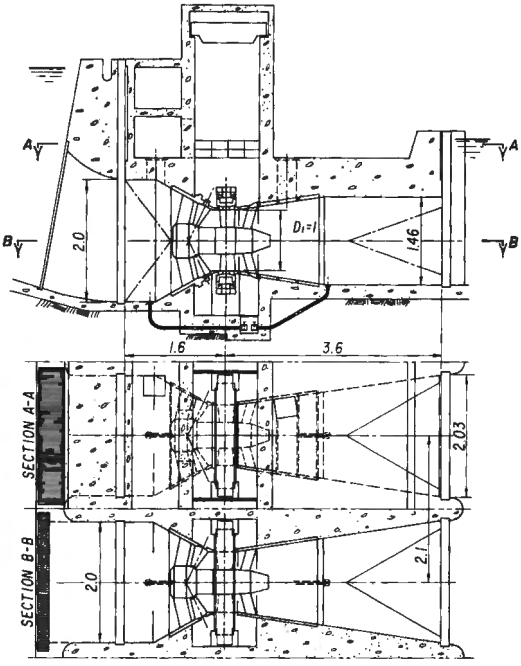

FIG. 8.—Standard Rim Generator Flow Passage Dimensions (Escher Wyss)

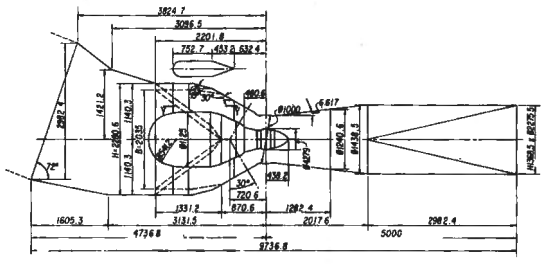

FIG. 9.—Standard Bulb-Turbine Flow Passage Dimensions (Fuji Electric Co.)

widely among manufacturers. The standard flow passage designs according to Fuji and Escher Wyss for bulb turbines illustrate the large variation in design among manufacturers (Fig. 7 versus Fig. 9). If data were available relating flow passage shape to hydraulic efficiency, a study could be done to evaluate the cost effectiveness of simplifying the intake shape to reduce the cost of the civil works.

Standard Designs for Line of Turbines

An alternative to standardization of flow passages in general would be to develop a standardized design for a series of powerplants to be installed at similar locations. A feasibility study was performed by Motor-Columbus Consulting Engineers to investigate harnessing of the Rhine River upstream of Lake Constance. The study investigated using 46 standard bulb units in 16 stations. Fig. 10 is a general layout developed for the project. This concept may be applicable to development of low-head power on American rivers with several possible low-head sites, such as the Ohio or Mississippi Rivers where numerous navigation dams without power generation currently exist. A standard design would reduce the costs associated with site-specific engineering for each powerplant.

Minipower Stations in Sweden

The Swedish Power Association has initiated a program to overhaul and replace discontinued small power stations 134 hp–2,011 hp (100 kW–1,500 kW) in Sweden (17).

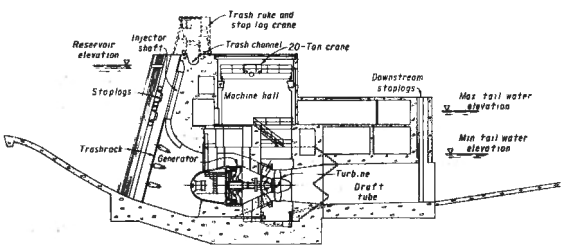

FIG. 10.—Powerplants on Rhine River from Domat (EMS) to Flasch (Motor Columbus Consulting Engineers)

The program includes hundreds of stations having a total installed capacity of about 3.15 hp $\times$ 10^5 hp (235 MW). A few simplified automated axial flow units were developed for the program. Sweden installed six pilot plants during the 1975–77 period to study operation and economics of the units selected.

In most of the small installations in Sweden it is possible to run the power stations intermittently. This makes it possible to design the turbine with fixed runner blades and fixed guide vanes and omit the regulator. The turbines are run as the reservoir is drained and shut off as the reservoir fills up again. The turbine efficiency is 90%–92%.

If the installations cannot be run intermittently, they can be run with regulation for constant water level upstream using units with movable runner blades. Turbine efficiency is 85%–91%.

The pilot stations indicated that it was difficult to bring the costs down enough to make the units economically profitable. However, the Swedish Government has made economic aid available (up to 35% of the cost) for the least profitable projects. Economic aid was considered to be justified since hydropower reduces

dependence on imported oil and is a renewable, environmentally acceptable form of energy that would otherwise be wasted.

Comment on Standardization

Most designers and consultants contacted feel that standardization of the inlet and outlet sections for low-head hydropower installations will not always be possible. The shape of the water passage is influenced by the structural support system requirements and the geology of the site. Even units designed by the same manufacturer vary from project to project.

Current Design Practices

This section summarizes material in technical literature, and comments made by manufacturers and designers concerning flow passage design. Many points covered in the references are described; however, the references should be referred to if more detail is required.

Forebay.—The design of the entrance channel in the forebay should provide a uniform flow distribution to avoid the tendency for vortices and to minimize trashrack losses. If the geometry of the approach channel is in question, a model study can be done to assure uniform approach flow conditions. Flow velocities and surges are of particular concern on navigable rivers. Run-of-river low-head dams are typically designed with the powerhouse on one side of the river and an overflow weir-type dam on the other side. In some cases an entrance channel to the powerhouse is excavated in the bank. This may cause problems of swirling flows in the approach channels and cross flows in the exit channel.

Intake—Vortex Formation.—Intakes should be designed with a sufficient submergence to avoid vortices. Air-entraining vortices may decrease turbine efficiency and pull floating debris into the turbine. Gordon (7) describes the development of design criteria to avoid vortices at low-head intakes based on a study of 29 existing hydroelectric intakes.

The intakes studied have the general configuration shown in Fig. 11. The factors which appear to affect the formation of a vortex are: (1) Geometry of the approach flow; (2) velocity at the intake; (3) the size of the intake, and (4) submergence. This article concentrates on the effects of velocity, intake size, and submergence on vortex formation. Gordon developed the following relationship by trial and error:

$$S = CVd^{0.5} \quad (1)$$

The effects of lateral approach flow were not evaluated in this study. However, Montreal Engineering Company of Canada uses a coefficient C of 0.3 for intakes with symmetrical flow and 0.4 for lateral approach flow (7) to determine minimum allowable submergence. These coefficients correspond to the lower and upper limits, respectively, of the shaded area on Fig. 11.

If the available submergence is not adequate, a model study can be done to study vortex formation. However, accurate prediction of vortex formation using a scale model is difficult. The effect of surface tension and air entrainment are important and are difficult to study in a Froude scale model. Durgin (6) describes a general method for investigating potential scale effects of free surface

vortices, so that a projection to prototype operating conditions can be made.

Zeigler (27) investigated the use of rafts placed under the water surface and other devices to prevent formation of air-entraining vortices at Grand Coulee Third Powerplant. The hydraulic model study included vortex tests on the effect of trashrack structures, upstream channel geometry, intake modifications, and submerged and floating rafts.

Bisaz (3) reports on the use of the flow "injector shaft." This device has the same effect as a raft. Because of an increase of surface current, vortices are suppressed. The injector was developed for bulb turbines on run-of-river plants to increase flow velocity on the surface to promote movement of floating debris toward the trashrack on the front of the powerhouse. The configuration of a typical flow injector is shown on Fig. 10.

Pier Design.—In typical run-of-river plants a flow separating pier divides the powerhouse and spillway. Piers also divide the intakes where there are multiple units. The size and shape of the pier should be carefully designed to avoid stagnant areas or flow disturbances which may cause excessive head losses or eddies. The HDC (Hydraulic Design Criteria) by the United States Army

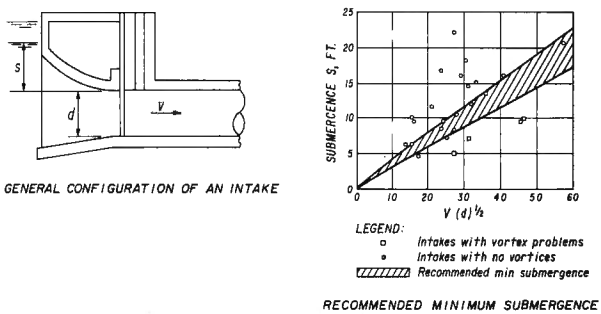

FIG. 11.—Submergence to Prevent Vortices

Corps of Engineers (22) contains design information useful in designing piers and intakes.

Rouve (20) outlines German practice in designing the size and shape of flow separating piers between a powerhouse and weir. The pier design procedure takes into account the location of the powerplant with respect to bends in the river, alinement with the weir, and the entrance channel to the powerplant cutting into the riverbank. Fig. 12 shows the general shape of the flow separating pier. The following are the limits on the length and width of the pier:

$$0.85B \leq L \leq 0.95B \quad (2)$$

$$0.28B \leq B_1 \leq 0.35B \quad (3)$$

$$0.72B \geq B_2 \geq 0.65B \quad (4)$$

the following formula defines the width of the pier (B):

$$B = CQ^{2/5} \quad (5)$$

The coefficient C varies between 0.7 and 1.4 depending on the factors mentioned

previously. Ref. 20 should be referred to for details of this design method.

The HDC sheets 111-5, 111-6, and 122-2 (22) describe pier effects for gated overflow spillways. Abutment effects are described in sheet 111-3/1 and 111-3/2. When spillways are operated with adjacent bays closed, the piers adjacent to the closed bays produce abutment-type effects. Although these pier design criteria are for spillways and not for submerged intakes they do show the relationship between pier shape and flow contractions. Fig. 13 shows five different pier nose shapes. Pier types 1 and 4 are the least desirable from the standpoint of negative pressures. However, negative pressures may not be a concern for low heads. Types 2, 3, and 3A were recommended for general use with high heads. Type 3A had the most desirable flow contraction characteristics.

Trashrack Design.—Trashracks are typically used to prevent large debris from entering the turbine. Orsborn (16) gives information on head losses through rectangular bar trashracks. The article evaluates previous work on trashrack and baffle losses and introduces additional data to supplement design information. Equations are developed to calculate the head loss as a function of the approach velocity and clear spacing between the rectangular bars. The head loss through

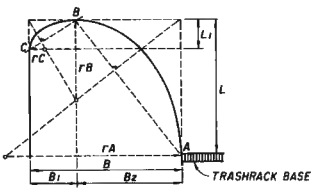

FIG. 12.—Flow Separating Pier between Powerhouse and Weir

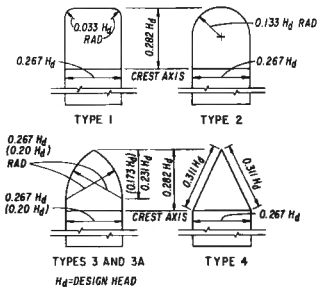

FIG. 13.—Pier Nose Shapes (Type 3A Dimensions in Parentheses)

the trashrack was found to be a minimum for bars with depth over thickness (d/t) ratios of about 3.0 for any solidarity (S) between 0.25 and 0.75, where solidarity is the ratio of the flow area blocked to the total flow area.

The possibility of flow induced trashrack vibrations should also be considered in the design. Trashracks spanning large intakes or subjected to high velocities are more likely to experience vibration problems. Vigander (24) describes trashrack vibration studies on the Raccoon Mountain Pumped-Storage Project. It was concluded from the tests that damping by either rubber pads or hydraulic baffle plates would effectively reduce flow induced vibrations on the Raccoon Mountain trashracks.

Intake Shape.—Intake shapes vary with the type of turbine used. Intakes are either circular or have a rectangular to circular transition. The face of the intake is either vertical or inclined. The hydraulic design of the intake is based largely on engineering judgment; the classical bellmouth criteria are used as a starting point. The entrance end of the bellmouth curve is then truncated to obtain a short intake profile which achieves required contraction in a length equal to approximately 1 runner diameter. General information on the effect

of intake shape on hydraulic losses is not available. Studies by Peterka (18) and Rhone (19) indicate, however, that the size of the intake could possibly be reduced without introducing excessive additional hydraulic losses, since flow separation and resulting energy losses are less of a problem at low velocities. The ideal bellmouth entrance design was developed for high-velocity conduits. Since the velocity for low-head turbines is much lower, it is possible that savings could be achieved in trashracks, bulkheads, entrance gates, and other areas by reducing the entrance size.

It might also be possible to simplify the framework by using flat surfaces to approximate curved surfaces. The cost effectiveness and practicality of these changes require further study to determine if reducing entrance sizes and simplifying intake shapes are worth pursuing in low-head powerplants.

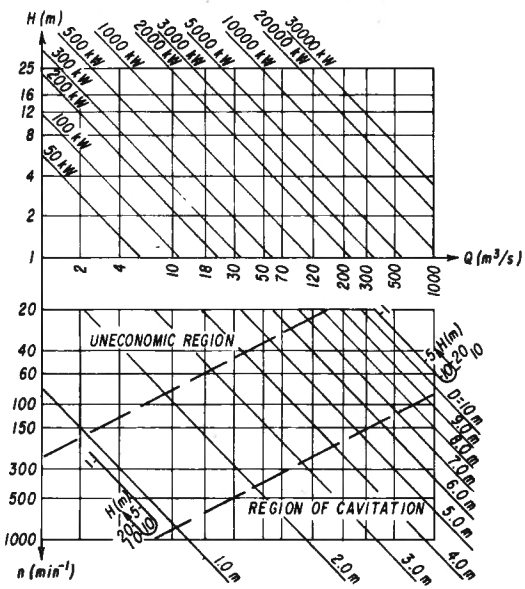

FIG. 14.—Runner Diameter Design Chart (1 m = 3.28 ft, 1 m³/s = 35.3 ft³/s, 1 kW = 0.746 Hp)

Fish Passage Allowances.—Intake velocities may be limited if fish passage facilities or screening devices are included in the design. This limitation may control the intake design. Optimum water velocities will depend on the type of fish and on the type of facilities used. Bell (2) gives fishway structure design criteria and other factors related to design of fish passage facilities.

Downstream passage of fish through low-head axial flow turbines may not be a serious problem since the openings between the wicket gates and the runners are generally large, the velocities are low, and the flow passages are straight. Bell (2) states that "turbines of modern design generally have a fish passage efficiency of 85 percent or higher."

Runner Diameter and Turbine Setting.—The turbine setting is determined by the allowable specific speed which is usually controlled by the cavitation potential.

From an economic standpoint, it is desirable to select the highest specific speed possible since this results in a smaller, lighter generator. The cavitation potential of an axial flow turbine is generally lower than a Kaplan unit. This allows the axial turbine to have a higher setting or a higher speed (12). Other factors such as smooth operating range and submergence also enter into the design. Heinemann (9) used data from 130-power stations to develop a design aid to determine runner diameter and the powerhouse size. The upper chart in Fig. 14 makes it possible to determine the capacity in kilowatts. In the lower diagram the runner diameter can be determined. The head, H, is marked on the lateral scales and a line is drawn connecting these points. The runner diameter can then be determined for a certain discharge (Q) or speed (n). The range of applicability is bounded by a region of uneconomic operation and the region of cavitation. The assumptions were checked by comparing existing projects with predictions using this chart.

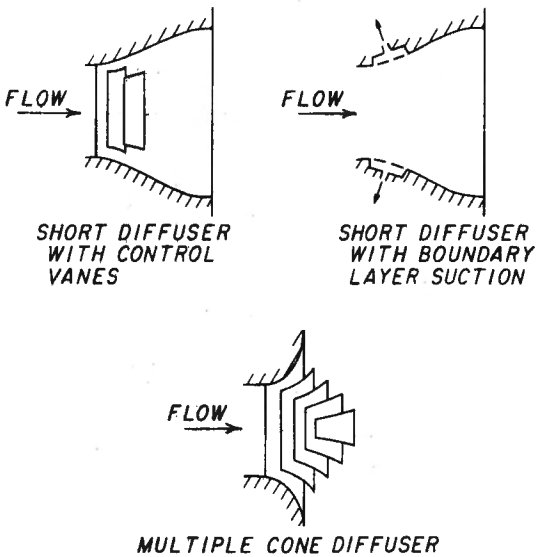

FIG. 15.—Possible Methods for Shortening Draft Tubes

Sutherland (21) also gives charts for finding the approximate runner diameter and rules of thumb enabling the approximate dimensions for an entire unit to be found. An empirical relation between diameter (D) and the ratio of power to head (in horsepower/head) is:

$$D = 0.24\left(\frac{\text{hp}}{H}\right)^{0.4} \quad \text{(6)}$$

in metric units. For power in terms of kilowatts of turbine output the formula is:

$$D = 0.272\left(\frac{\text{kW}}{H}\right)^{0.4} \quad \text{(7)}$$

Dadu (4) presents a method for developing a nomograph for determining the setting of a hydraulic turbine relative to the tailwater level. The turbine manufacturer must supply data concerning cavitation performance to develop the nomograph. This method is useful only for the installation under consideration.

Draft Tube.—The hydraulic design of the draft tube is customarily determined by the turbine manufacturer, since it is considered an integral part of the turbine in determining the turbine performance. However, there is potential for decreasing the length of draft tubes, thus decreasing the cost of the civil works. According to Kline (11), the most efficient conical draft tube would be about 10-runner diameters long with a total included angle divergence of about 7°. Economics usually limits the length of the draft tube to 4.5-runner diameters–5-runner diameters with the total angle of diversion of about 13°–15°. A study done on the feasibility of low-head hydroelectric generation in 1969 by Mercer (13) concluded that, "The section of the civil works structure where improvement would be most significant is the draft tube." The draft tube accounts for about 30% of the cost of the civil works in a low-head structure. There are several possible methods presented by Mercer for preventing boundary layer separation, thus shortening the draft tube (Fig. 15).

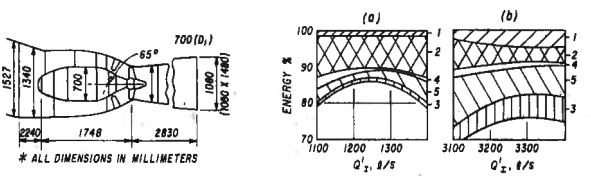

FIG. 16.—Model Bulb Turbine Energy Balances

The study concluded that a need existed for research in the design of draft tubes to apply modern principles of boundary layer control to reduce the length of draft tube diffusers. Research in this area has not been done on hydraulic turbines. The concept of boundary layer control has been bypassed in favor of simple conical diffuser designs because of the potential risks of complications involved with a new concept. Shortening the draft tube in this manner would probably require a successful demonstration project before it would be accepted. Oman (15) reports on research to shorten diffusers for wind turbines using boundary layer control. This research indicates that there is a promise of reducing the length of diffusers by an order of magnitude while maintaining efficiency.

Wirasinghe (25) deals with the question of whether addition of swirl to fluid, otherwise flowing axially, in a diffuser would improve its performance. Model studies indicated that the coefficient of performance of conical diffusers is improved by an addition of a swirl velocity component corresponding to a forced vortex. This paper concluded that the optimum swirl angle is about equal to the diffuser's total conical angle. Improvements are not likely to extend to diffusers with total conical angles greater than 30°.

Varlamov (23) reports on a study that investigated the interaction and losses

as flow moved through the various elements of the flow passage in a bulb turbine. Flow parameters were measured in various turbine operating modes, characterized by blade angles, $\theta = 0°$, 5°, and 20° and rotating speeds $N =$ 110 r/min, 140 r/min, and 180 r/min with various settings of the wicket gates. Based on these data, energy losses in individual sections of the flow passage are presented in a chart for several operating modes. Fig. 16 gives energy balances for two turbine operating modes. It should be noted that the selection of design data should be based on minimum total losses in the turbine as opposed to minimum losses in each section of the waterway. Fig. 16 shows the dimensions of the model.

Alestig (1), de Siervo (5), Isaev (10), Mikhailov (14), and Worster (26) provide additional information on draft tube design. Gubin (8) describes developments in design and construction of draft tubes in the Soviet Union and western countries. Several consultants indicate that the section of the draft tube immediately downstream from the runner is the most important. The design of this section is critical to the efficiency of the draft tube. Therefore, draft tube gates, and other obstructions should be at least 2-runner diameters downstream from the runner.

Tailrace

The outlet from the draft tube is generally designed to have a minimum submergence of 2.5 ft–3.3 ft (0.75 m–1.0 m) at low tailwater. The flow discharging from the draft tube at low tailwater may cause surges and turbulence and the rise of the channel bottom may cause fluctuations in the tailwater level. These tailwater fluctuations can cause power swings in the turbine performance. The channel and the tailrace should be designed to minimize these problems. However, tailrace design guidelines are sketchy, consultants recommend that a steep rise in the channel bottom be avoided, but the allowable rate of rise is not defined.

Conclusions

Complete standardization of flow passages for low-head hydropower developments is not feasible. Structural and geological considerations may cause design variation from site to site. Allowances for fish passage may control the design in some cases. Package units are presently available for small plants. These units have standard flow passages included. The low costs resulting from standardization are achieved at the expense of some loss in efficiency. However, the cost savings may be significant especially if several installations are considered as a group.

Standardized designs are feasible for similar site characteristics. Where geologic and structural considerations do not vary widely, the same design may be used for a series of installations, thus reducing the costs associated with site-specific engineering and design.

The hydraulic design of the draft tube is customarily determined by the manufacturer since it is considered an integral part of the turbine in determining turbine performance. Results of model tests done by manufacturers are not publicly available. However, modern techniques of boundary layer control may be useful in shortening draft tubes, thus considerably reducing construction

costs. The possibility of reducing draft tube lengths through boundary layer control has not been investigated in hydraulic turbines.

Intake shape is typically determined using design criteria for high velocity conduit entrances. It is possible that intake shapes may be reduced in size or simplified without a significant loss in efficiency. Velocities are generally low in turbine intakes and the resulting energy losses are also low. Simple flow passage shapes can be used in these low velocity areas without increasing energy losses.

Acknowledgments

The work upon which this paper was based was sponsored by the Department of Energy under agreement EG-77-A-36-1024 with the Water and Power Resources Service. The following companies provided some of the information used: Harza Engineering Company, International Engineering Company, Allis-Chalmers, Motor Columbus Consulting Engineers, Inc., F.W.E. Stapenhorst, Inc., Fuji Electric Company, Ltd., Escher Wyss, Ltd., Public Utility District No. 1 of Chelan County, Washington, Karlstads Mekaniska Werkstad, Swedish Power Association, and Hydro Energy Systems, Inc. (Neyrpic). Mention of these companies in no way implies endorsement or recommendation by the Water and Power Resources Service or the United States Government for these companies or their products.

Appendix I.—References

1. Alestig, R., "Influence of Draft Tube Dimensions on Kaplan Turbine Efficiencies," *Transactions, International Association for Hydraulic Research Symposium,* Part 1, Stockholm, Sweden, 1970.
2. Bell, M. C., "Fisheries Handbook of Engineering Requirements and Biological Criteria," *Fisheries—Engineering Research Programs,* Chapters 25 and 33, Corps of Engineers, North Pacific Division, Feb., 1973.
3. Bisaz, E., Taubmann, K. C., and Fischer, P., "Improvement in Transport of Floating Debris," *Water Power and Dam Construction,* Nov., 1976, pp. 41–45.
4. Dadu, V., and Bedros, N., "Determination of Low Head Turbine Installation Quota as Compared to the Downstream Level," Translated from the Rumanian: *Energetica* (Rumania), Vol. 25, No. 2, Feb., 1977, pp. 45–48. (Bureau of Reclamation Translation, May, 1978.)
5. de Siervo, F., and de Leva, F., "Modern Trends in Selecting and Designing Kaplan Turbines," *Water Power and Dam Construction,* Part 11, Jan., 1978, pp. 52–58.
6. Durgin, W. W., and Hecker, G. E., "The Modeling of Vortices at Intake Structures," *Joint Symposium on Design and Operation of Fluid Machinery,* ASME, ASCE, *Society of Civil Engineers,* Vol. 1, June, 1978, pp. 381–391.
7. Gordon, J. L., "Vortices at Intakes," *Water Power,* London, England, Apr., 1970, pp. 137–138.
8. Gubin, M. F., "Draft Tubes of Hydroelectric Stations," Energia Press, Moscow 1970, translated from Russian, Available from the United States Department of Commerce, National Technical Information Service, Springfield, Va.
9. Heinemann, E., Kraft, K. D., and Rouve, G., "Runner Diameter of Tubular Turbines," *Journal of the Power Division,* ASCE, Vol. 102, No. PO1, Proc. Paper 11833, Jan., 1976, pp. 53–61.
10. Isaev, I. M., "Influence of a Method of Air Admission on Pressure Surges in Draft Tube Models of Axial Hydro-Turbines," Translated from the Russian: *Gidromashinostroenie,* Trudy LPI, No. 215, Moscow and Leningrad, pp. 58–68, 1961, by D. L. King, No. 756, July, 1968.

11. Kline, S. J., Abbott, D. E., and Fox, R. W., "Optimum Design of Straight-Walled Diffusers," *Journal of Basic Engineering,* ASME, Sept., 1959, pp. 321–331.
12. "Low Head Power Generation with Bulb Turbines," *International Engineering Company, Inc.*
13. Mercer, A. G., "Study of Factors Affecting Feasibility of Low Head Hydroelectric Generation," *No. 14-06-D-6585, CER68-69AGM26,* Civil Engineering Department, Colorado State University, prepared for United States Department of the Interior, Bureau of Reclamation, March, 1969.
14. Mikhailov, I. E., Mityurev, E. L., Kazennov, V. V., Volshanik, V. V., and Bondarenko, B. V., "Effects of Slots and Apertures in Floors of the Diffusers of Draft Tubes on the Power Characteristics of Hydraulic Turbines with Adjustable Blades," In Russian, *Gidrotekh Stroit,* n 9, Sept., 1973, pp. 10–13.
15. Oman, R. A., Foreman, K. M., and Gilbert, B. L., *Investigation of Diffuser-Augmented Wind Turbines, Part II-Technical Report, Report RE-534,* Research Department, Grumman Aerospace Corporation, prepared for Wind Energy Conversion Branch, Division of Solar Energy, Jan., 1977.
16. Orsborn, J. F., "Rectangular-Bar Trashrack and Baffle Headlosses," *Journal of the Power Division,* ASCE, Vol. 94, No. PO2, Proc. Paper 6223, Nov., 1968, pp. 111–123.
17. Persson, Thorild, and Lasu, Sten, "Mini Powerstations in Sweden," Swedish Power Association, Sept. 1, 1978.
18. Peterka, A. J., and Lindholm, E. A., "A New Look at Penstock Entrance Designs," presented at the April 8–9, 1968, Western Water and Power Symposium, held at Los Angeles, Calif.
19. Rhone, T. J., "Hydraulic Model Studies for the Penstocks for Grand Coulee Third Powerplant," *Bureau of Reclamation Report No. REC-ERC-74-12,* Aug., 1974.
20. Rouve, Ing. Gerhard, "Der Krafthaustrennpfeiler. Stromungsverhaltnisse an gekrummten Wanden," *145 Arbeit Aus Dem Theodor-Rehbock-Flussbaulaboratorium,* Universitat Karlsruhe, Jan., 1958.
21. Sutherland, R. A., "Tubular Turbines," *Bulletin 309,* Washington State University College of Engineering Research Division, Technical Extension Service, 1968.
22. *Hydraulic Design Criteria,* Sheets 111-5, 111-6, 122-2, 111-3/1, 111-3/2, and 221-1, United States Army Corps of Engineers, prepared for Office, Chief of Engineers, by United States Army Engineer Waterways Experiment Station.
23. Varlamov, A. A., Liukonen, IU. N., and Ponarskii, L. I., "Study of the Operating Process of an Enclosed Hydraulic Turbine," Translation from Russian, *Energomashinostroenie,* No. 7, 1977, pp. 1–3, Bureau of Reclamation, May, 1978.
24. Vigander, S., and March, P., "Trashrack Vibration Studies, Raccoon Mountain Pumped-Storage Project," *Laboratory Report No. 1, Report No. 43–47,* Tennessee Valley Authority, Division of Water Control Planning Engineering Laboratory.
25. Wirasinghe, N. E. A., "Effect of Swirl on Conical Diffuser Performance," *Joint Symposium on Design and Operation of Fluid Machinery,* ASME, ASCE, Vol. 1, June, 1978, pp. 223–245.
26. Worster, R. C., "The Efficiency of Diffusers and Some Test Results on the Effect of Wall Roughness," *No. R.R. 554,* The British Hydromechanics Research Association, Mar., 1957.
27. Zeigler, E. R., "Hydraulic Model Vortex Study, Grand Coulee Third Powerplant," *REC-ERC-76-2,* United States Department of the Interior, Bureau of Reclamation, Feb., 1976.

Appendix II.—Notation

The following symbols are used in this paper:

B = pier width;
C = coefficient;
D = runner diameter;
d = intake diameter;
F = Froude number;

H = head;
Hd = design head;
L = pier length;
N = rotating speed;
n = specific speed;
Q = discharge;
r = pier radii;
R = Reynolds number;
S = submergence; and
V = flow velocity.

16494 INTAKES AND OUTLETS FOR LOW-HEAD HYDROPOWER

KEY WORDS: **Axial flow turbines;** Draft tubes; Flow control; Head losses; **Hydroelectric power generation; Intakes; Low head;** Piers; **Standardization;** Turbines; Water flow

ABSTRACT: A state-of-the-art review on standardization in low-head hydroelectric development is presented. In addition, the current flow passage design practices are summarized. Several package units are available in the range from 100 hp to 6,700 hp (75 kW to 5,000 kW). These predesigned units reduce equipment costs through standardized manfacturing techniques. Several types of package units are considered. Manufacturer's standard flow passage dimensions are given for bulb and rim-generator turbines. These standard dimensions can be used for initial layout of a low-head hydroelectric development. Standard flow passage designs are feasible for similar sites; however, structural and geological considerations may cause design variations when site conditions vary. Simplified intake and draft tube designs may lead to less costly structures.

REFERENCE: Pugh, Clifford A. (Hydr. Engr., Dept. of the Interior, Water and Power Resources Service, Engrg. and Research Center, Denver, Colo.), "Intakes and Outlets for Low-Head Hydropower," *Journal of the Hydraulics Division,* ASCE, Vol. 107, No. HY9, **Proc. Paper 16494**, September, 1981, pp. 1029-1045