LABORATORY TEST OF MUELLER 6-IN GATE VALVE

MARCH 1981

JERRY FITZWATER

PAP-406

PAP-406

Form DFC-11
(12-61)
Bureau of Reclamation

INFORMATIONAL ROUTING

~~D-1530~~

Memorandum

Denver, Colorado
March 3, 1981

Chief, Mechanical Branch

Chief, Hydraulics Branch

Laboratory Test of Mueller 6-in Gate Valve

Purpose

The Hydraulics Branch tested a 6-in (152-mm), 200-W, 400 test, nonrising stem, gate valve from the Mueller Company. The Open and Closed Conduit Systems Committee requested the tests to determine the torque requirements for valve operation under high differential pressures.

The Valve

The valve is a resilient seat gate valve that combines the characteristics of a butterfly valve with that of a gate valve. A modified wedge disk travels vertically along grooves cast in the valve body. A resilient rubber seat ring is mounted to the angular side of the disk providing a positive seal with minimum torque (see figure 1).

Instrumentation

The Mueller valve was tested in the laboratory's high head test facility. Two 500-lb/in^2 (3450-kPa) transducers were installed on the 6-inch (152-mm) pipe (one upstream, 13 diameters, and one downstream, 8 pipe diameters, from the valve). Pressure readings from these transducers were calibrated to a 1 mm = 5-lb/in^2 (34.5-kPa) scale and recorded on a strip chart.

A special socket was made to use a 1/2-inch drive, 30- to 250-ft-lb (41- to 340-N·m) torque wrench to determine the torque required for operation. A handheld electrical marker attached to the strip chart recorder was used to indicate when a specific torque was reached.

Test Procedure

A seven-stage vertical turbine pump was used to develop the high differential pressures needed for the valve tests. The pump was driven by a 250-hp (186-kW) variable-speed d-c motor. Flow rate was determined

★GPO-1977-778-407

by an 8.0- by 4.5-in (203- by 114-mm) Venturi meter installed 10 ft (3 m) downstream from the pump outlet. Due to limitation of the pump flow capacity, these torque tests were conducted in the immediate seating range of the valve.

The Mueller valve was completely closed prior to setting the desired pressure upstream against the valve. These pressures ranged from 80 to 250 lb/in^2 (552 to 1724 kPa). At these various pressures, the valve was opened using the torque wrench starting at 30 ft-lb (41 N·m) and increasing the torque in 5-ft-lb (7-N·m) increments as needed until the valve was fully open. This procedure was also repeated in the closing mode. The differential pressure, torque requirements, and each full turn of the valve were recorded on the strip chart.

Results

The highest torque requirements occurred in the closing mode during the initial seating of the valve disk. The torque peaked at approximately 60 ft-lb (82 N·m) with a pressure differential of 248 lb/in^2 (1709 kPa). These maximum torque results are shown in figure 2. (English to SI conversion - 1 lb/in^2 = 6.895 kPa, 1 ft-lb = 1.356 N·m.) Torque values for the valve one-fourth and one-half turn from initial seating are also shown in figure 2. Test No. 6 (dashed lines) typifies an average test that was made. During the opening mode, the highest torque required was approximately 50 ft-lb (68 N·m) with a pressure differential of 168 lb/in^2 (1158 kPa). The results of this test and others are shown in figure 3.

D. L. King

Attachments

Copy to: D-253 (2)
D-1530
D-1531
D-1533 (2 - Fitzwater)

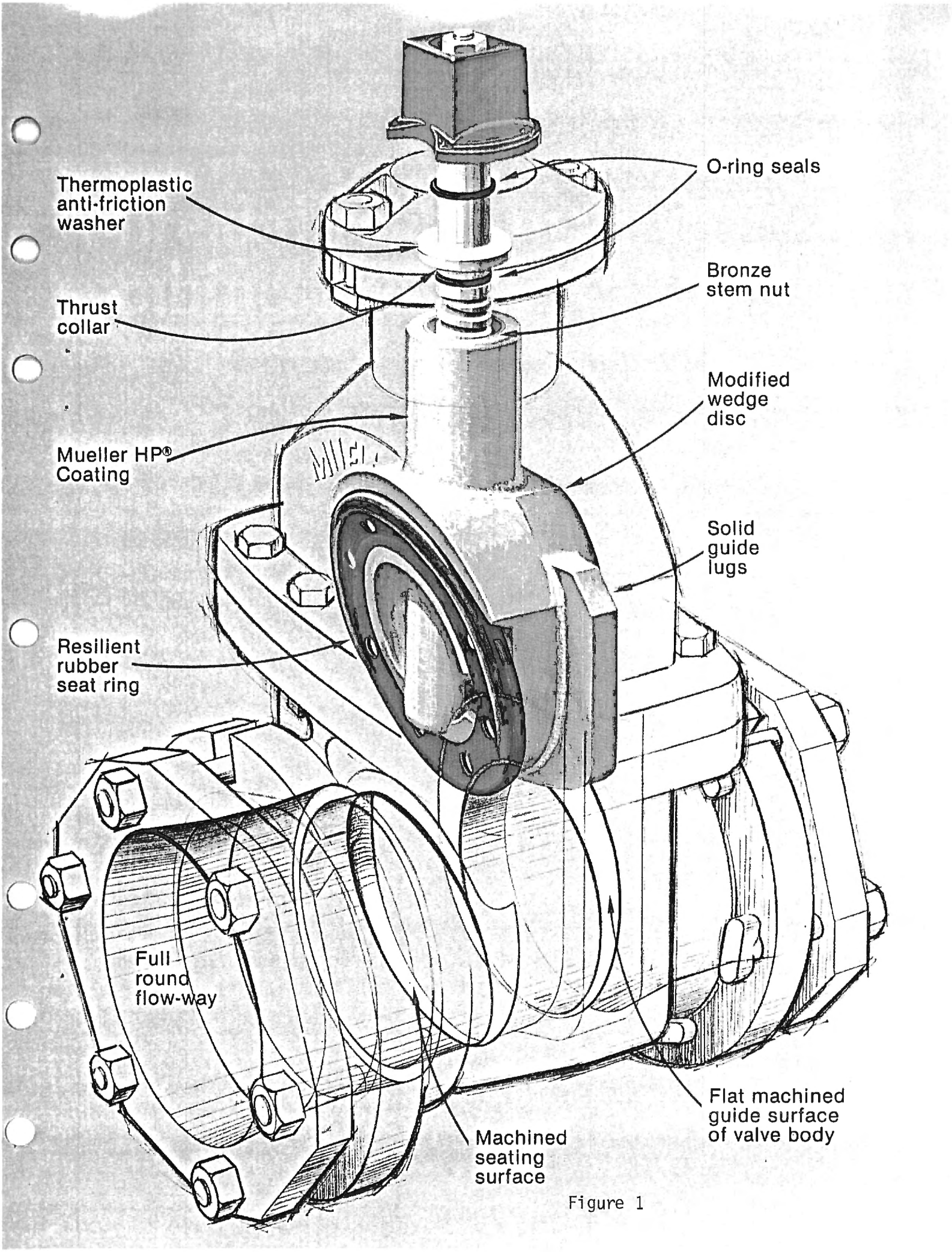
O-ring seals
Thermoplastic anti-friction washer
Bronze stem nut
Thrust collar
Modified wedge disc
Mueller HP® Coating
Solid guide lugs
Resilient rubber seat ring
Full round flow-way
Flat machined guide surface of valve body
Machined seating surface

Figure 1

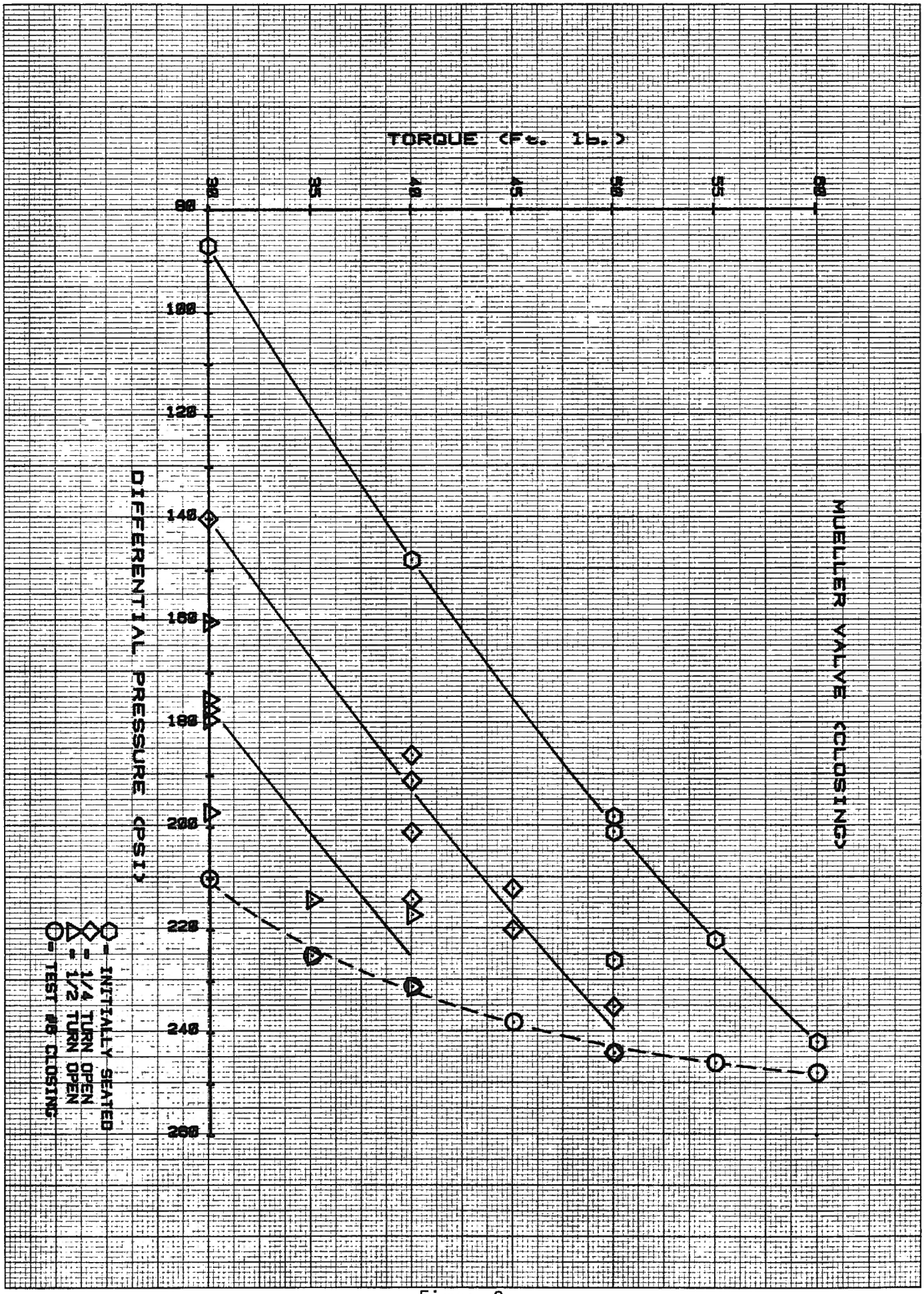

Figure 2

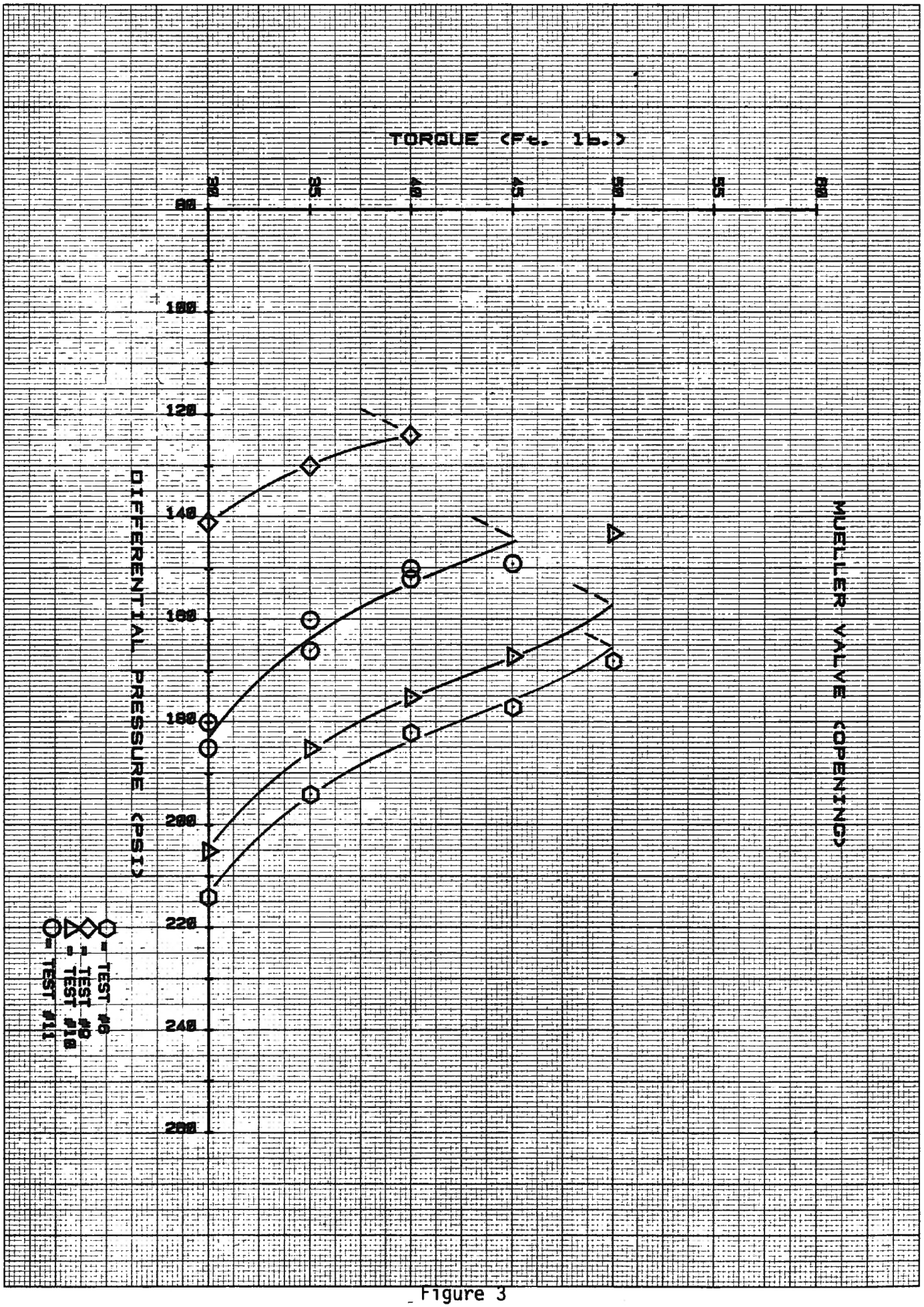

Figure 3