Form DFC-11
(12-61)
Bureau of Reclamation

INFORMATIONAL ROUTING

HYDRAULICS BRANCH
OFFICIAL FILE COPY

PAP 523

1532

567.

AUG 27 1975

Mr. J. T. Monscivitz
Manager, Southern Nevada Water
System
243 Lakeshore Road
Boulder City, NV 89005

Dear Mr. Monscivitz:

Enclosed are a copy of results of tests performed by Mr. T. J. Isbester on butterfly valve 30-5 at the Flamingo Flow Control Station and a copy of detailed instructions for setting the two-speed limit switch on the guard valves upstream of the 30-inch controllers. Please note the change in limit switch numbers from those specified in Mr. Isbester's travel report.

Thank you for your cooperation during the tests. We hope the report will be of benefit to you.

Sincerely yours,

SIGNED

Howard J. Cohan, Chief
Division of General Research

Enclosures

Blind to: Regional Director, Boulder City, Nevada, Attention: 210
253 (Thomas)
224 (Thibault)
410 (Yocom)
~~1532~~ (Isbester)

TJIsbester:dja-s

PAP 523

CAVITATION STUDIES
BUTTERFLY-VALVE 30-5
FLAMINGO FLOW CONTROL STATION

INTRODUCTION

During the period June 2-6, 1975, valve 30-5 was inspected, photographed, painted for cavitation erosion indication, and flow tested for six gate openings and various operating conditions. The tests were made with the hope of finding a solution to the long standing cavitation problem. The tests results are discussed in this report.

AIR INJECTION HOLES

The position of air injection holes was determined by steel tape along with the general configuration of the valve (Figures 1 and 2, and Table 1). Hole placement was specified previously on drawing 952-D-1025, sent to the Regional Director on December 9, 1974. A copy of this drawing is attached (Figure 3).

The longitudinal placement of holes in row 4 is most critical. Improper placement results in positive pressure and eliminates the possibility of cushioning air being drawn into the valve body. Drilled holes numbers 4 and 5 in row 4 are shown in figure 4. Hole 4 was found to be at the junction between the downstream end of the retainer and rubber seal, much too far downstream to draw in air. Hole 5 was located near the midpoint in the upstream retainer, also too far downstream to draw in air for all gate openings tested. The longitudinal spacing was satisfactory only in hole 3, row 4. Many of the holes in the valve body were found to be plugged by accumulations of a rather fine granular material. Cursory analysis indicated the material to be compounds of iron. Included were FeS, Fe_2O_3, and Fe_3O_4. The granules were quite hard and highly magnetic. All holes were cleaned before proceeding with testing.

CAVITATION DAMAGE INDICATOR PAINT APPLICATION

Prior to assembling the controller, a paint was applied to the interior of the valve in the vicinity of the disc. The paint was a white pigmented concrete curing compound which had demonstrated a low resistance to cavitation pitting in the laboratory. After the paint application, the valve was photographed so that an initial record of coverage was available.

PRESSURE PROFILES

The valve was operated at gate openings of 20, 30, 40, 50, 60, and 70 percent. Compound gages were used to measure pressure or vacuum at each air injection hole for the listed gate openings. These profiles are shown on figures 5 through 7. From the profiles, the only row which could be effective for getting a cushion of air into the valve is row 4.

SOUND LEVEL MEASUREMENTS AND COMPRESSED AIR

Stationing was established on the downstream conduit for recording of sound levels (Figure 8). Levels were recorded at the six locations for flow without air admitted to the valve body, and for flow with compressed air admitted to the five holes in row 4. An overall average reduction in sound level of 1.74dB was obtained for tests when compressed air was supplied to the valve as compared to valve operation with no air. No reduction in sound level was observed with only one hole drawing in ambient air.

CONCLUSIONS

Hole Location and Ambient Air Admission. - Holes in row 4, except for No. 3, should be redrilled to conform to specifications in figure 3 and 9. Hole 3 draws air quite steadily and appears to be properly located with relation to rounding of the upstream retainer corner due to the coal-tar epoxy coating. Two additional holes should be drilled in the retainer on either side of hole 3, midway between holes 2 and 3, and holes 3 and 4. These holes should be drilled as near as possible to the upstream corner as shown in figure 9. The holes should be drilled from the inside out, so as to obtain the best possible placement. Air drawn in through these holes will help to protect the seal and the crown of the downstream conduit which has sustained slight cavitation erosion from previous operation (Figure 10). Each hole should be equipped with a one-way check-valve and stop cock, with the stop cock fully open. For the valve supplied to the laboratory, the amount of air drawn in versus the negative pressure required is shown in figure 11. The advantage of larger holes is apparent. Therefore, the new holes should be drilled with a 3/16-inch bit. One quarter inch holes are sufficiently large to cause cavitation and should be avoided.

Reduction of Sound Level with Compressed Air. - With the reduced average sound level as a result of compressed air injection, some degree of damage reduction could be expected. However, as only a minimum amount of cavitation affects the boundary, and a considerable amount of cavitation persisted even with the compressed air admission, use of compressed air is not recommended at this time. Its use should still be considered as one of the more expensive alternatives.

Indication Paint Removed by Cavitation. - From an onsite inspection, only a single spot was observed. This was on the downstream side of the rubber seal on the crown centerline. A photograph of the valve taken after painting and before testing revealed that this area had not been painted initially. However, an area of removal was observed from the photographs. The removal occurred on the right side of the valve body, about a third of the way between shaft and invert. The removal was minor, about one-half inch wide by one-inch long, and in a location similar to that noted on other butterfly-valves, (Figure 12). This appears to result from a disturbance caused by the shaft of a throttled butterfly-valve. The paint removal was very minor in the valve body. The downstream conduit received some paint removal along the crown. This removal did not extend downstream, but affected the upstream corner of the angled flow offset (Figure 10).

Roughness of Protective Coating. - With the occurrence of cavitation damage, there is a need to look for surface irregularities for a possible cause. A number of rough protective coating areas were found in the valve. These result because of the tendency of the coal-tar epoxy coating to run after application. Figure 13A shows the wavy irregular coating on the invert just upstream of the valve. Figure 13B shows the rough (unknown type) coating on the upstream side of the venturimeter. The irregularities just upstream of the valve were ground flush before placing in service.

Throttle with Downstream Gate Valve. - The use of an orifice plate to create back pressure and minimize cavitation was discussed. Two orifice plates would be required, one for summer demands, and one for winter. The installation of an orifice would be a considerable task and should not be necessary if the downstream gate valve is used to create the needed back pressure. In order to minimize the possibility of the gate valve being damaged by cavitation, the maximum back pressure generated by the valve should not exceed 15 feet of water. Back pressure can be determined by the gage downstream of the controller.

Periodic Inspections. - Disassembly and inspection of valves should be accomplished on a periodic basis. This is desirable to pervent cavitation erosion progressing to endanger the unattended facility. Photographic records should be maintained for detecting progressive damage. For areas of known damage, a metal thickness gage may be used to detect progressive damage. These are used on the outside of a pipe and will measure distance to the inner surface. These devices are accurate, easy to use, and operate ultrasonically, sending out a pulse and receiving an echo. One manufacturer is Branson Instruments Company, Stanford, Connecticut 06904. The instrument has been used successfully in the laboratory to detect known areas of cavitation.

OTHER POSSIBLE ALTERNATIVES

Modifying Valve Seat Area. - Changing the configuration of the valve near the seat to eliminate the irregular surface may reduce the amount of cavitation, however, with the need of the seal to protrude, one offset into the flow, and one away from the flow, must remain. Also, the opening and closing torque characteristics may be altered by modifying the valve seat area. Before any permanent changes are made, the manufacturer should be questioned on these effects. With the expected purchase of heavy duty operators, additional capacity may be available to handle increased operating torques.

Sleeve to Repair Erosion. - A sleeve made of a material highly resistive to cavitation was proposed by the Southern Nevada Water System Manager for installation downstream of valves 36-6 and 42-7. As proposed, the sleeve inside diameter would equal that of the existing valve, requiring accurate machining of the valve to properly contain the sleeve. In addition to the difficulty in fitting, two other considerations should be made:

1. As there appears to be no means to permanently bond the sleeve to the parent valve, no strength is developed within the sleeve to resist the negative pressures associated with cavitation, the sleeve may be pulled toward the center of the flow passage, causing failure. This could be overcome by increasing the sleeve thickness.

2. Electrolytic action between the sleeve and the valve can cause a deterioration of the sleeve, and should be investigated before selecting the sleeve material.

The sleeve should be considered a questionable alternative at this time.

A proposed modification to the cone downstream of valves 36-6 and 42-7 is contained in figure 14. With this modification, an attempt is made to provide an area of circulation to the jet to relieve the low pressure and eliminate the tendency of the jet to cling to the diverging surface of the cone.

Table 1

Distance Between Drilled Holes and Seal Centerline

Row	Tap	Distance (inches) a	b	c	d	e
1	1	4.34				
1	2	4.22				
1	3	4.22				
2	1		2.72			
2	2		2.84			
2	3		2.97			
2	4		2.97			
2	5		3.03			
3	1			2.53		
3	2			2.16		
3	3			2.34		
3	4			2.59		
3	5			2.22		
4	1				0.94	
4	2				0.94	
4	3				1.34	
4	4				0.84	
4	5				1.09	
5	1					2.47
5	2					2.22
5	3					2.16
5	4					2.09
5	5					2.34

Distance to Seal ℄

Row	Distance
1	a
2	b
3	c
4	d
5	e

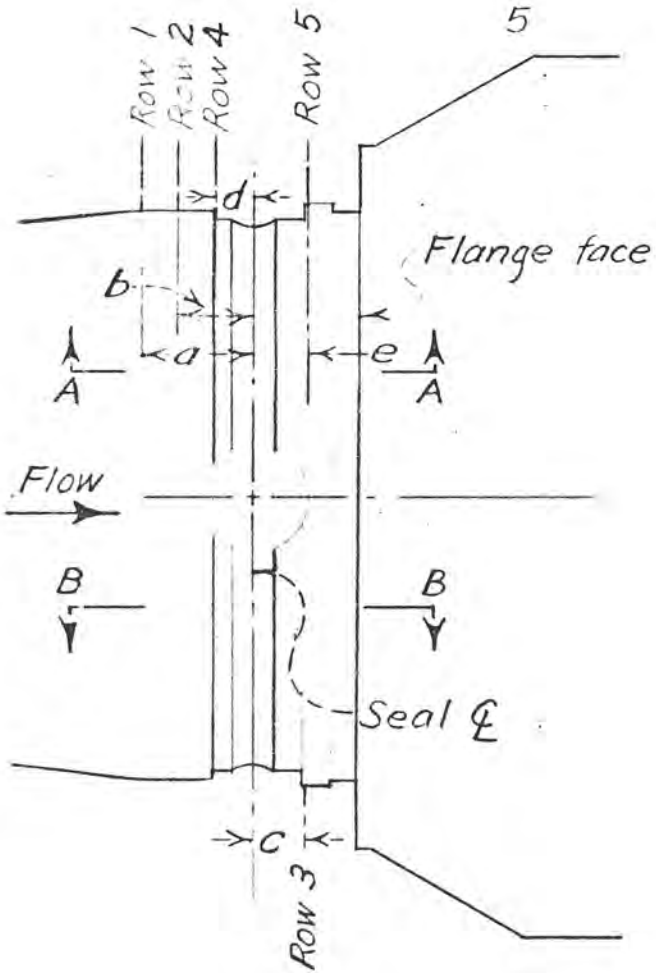

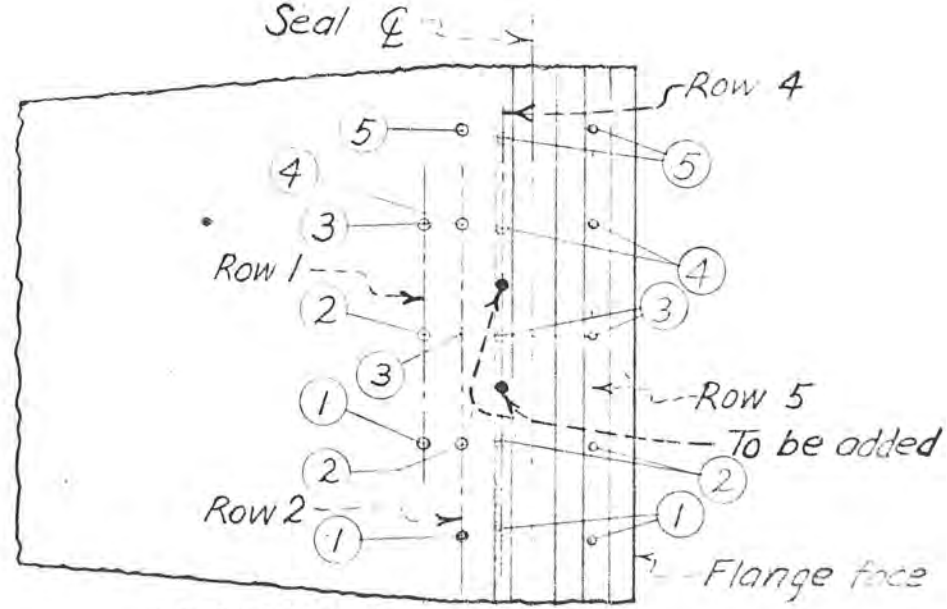

SECTION A-A, Crown

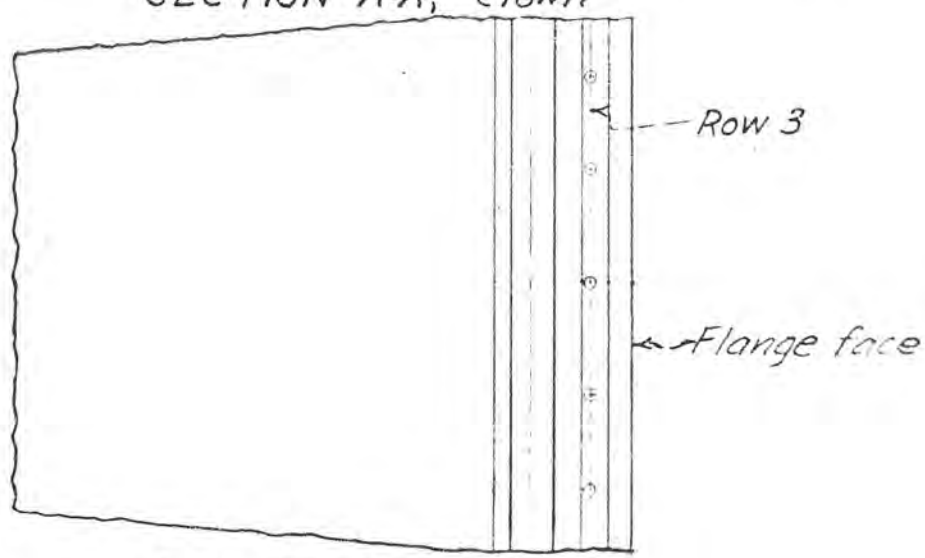

SECTION B-B, Invert

AIR TAP LOCATION

Figure 1

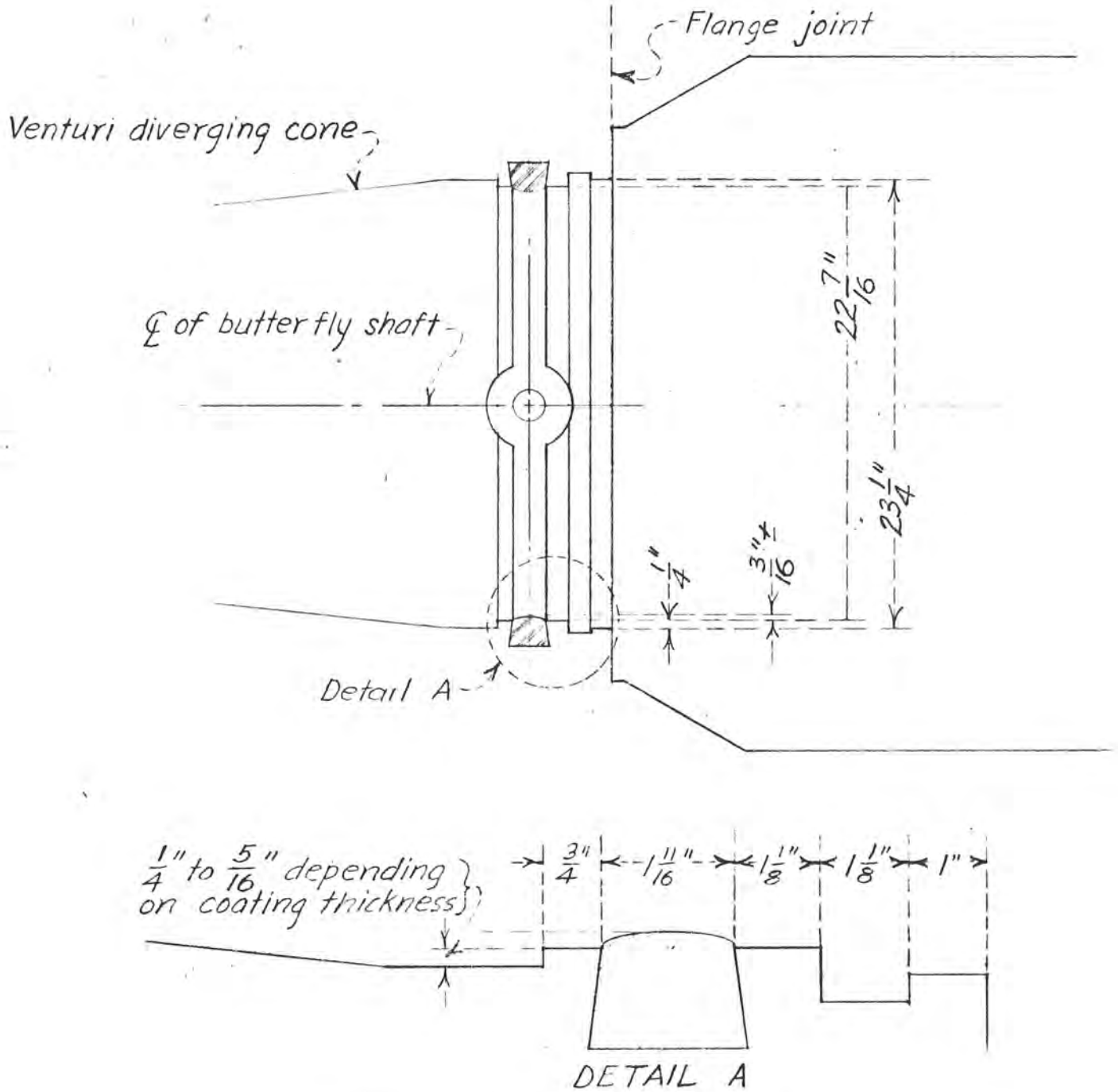

VALVE BODY CONFIGURATION

Figure 2

Figure 3

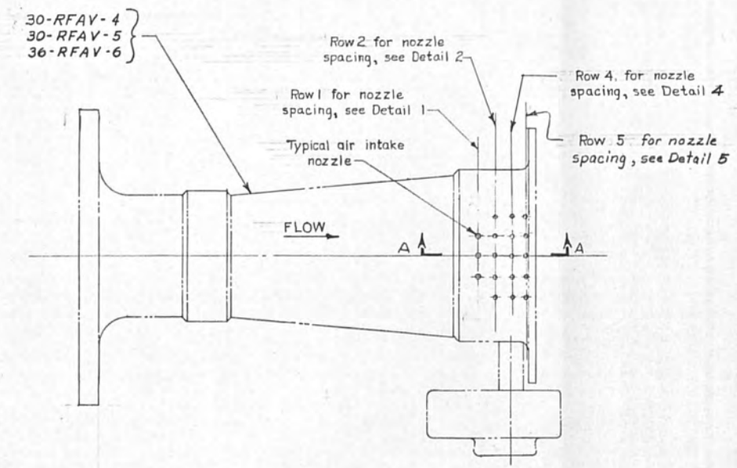

PLAN
Flow control valve with air nozzle modification.

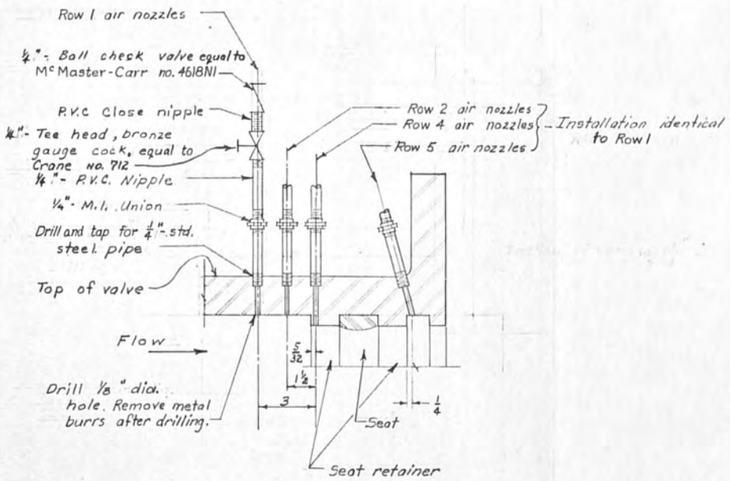

SECTION A-A
Row 3 shall be installed on the bottom of the flow control valve similar to row 5.

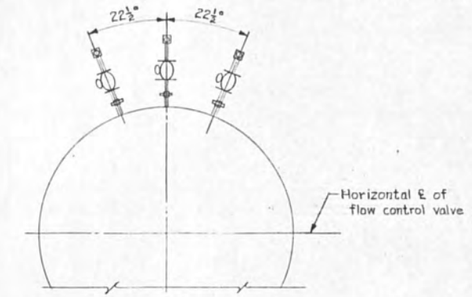

DETAIL 1
Row 1 air nozzle spacing.

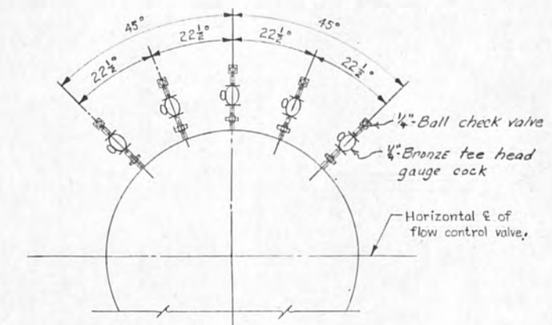

DETAIL 2
Row 2 air nozzle spacing.

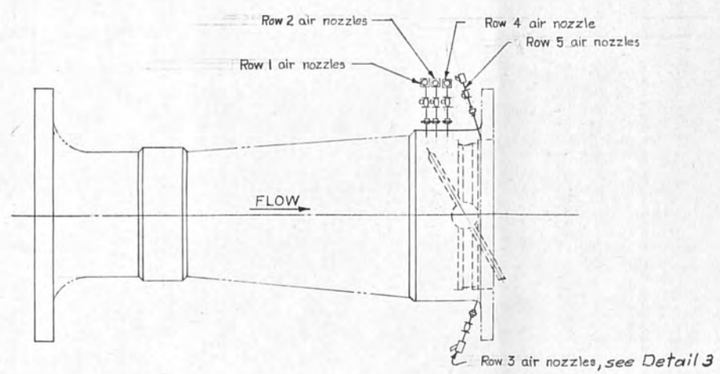

ELEVATION

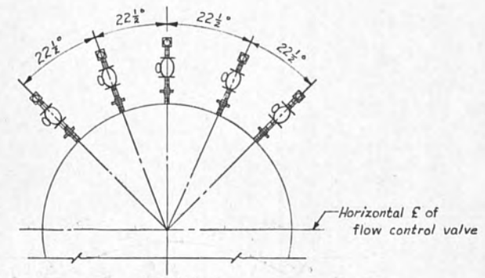

DETAIL 4
Row 4 air nozzle spacing.

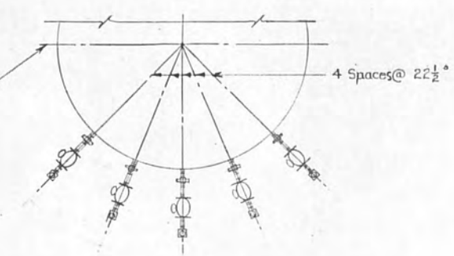

DETAIL 3
Row 3 air nozzle spacing.

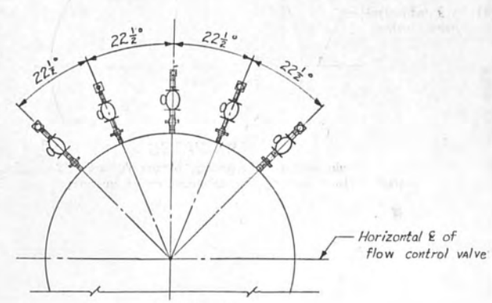

DETAIL 5
Row 5 air nozzle spacing.

ALWAYS THINK SAFETY

UNITED STATES
DEPARTMENT OF THE INTERIOR
BUREAU OF RECLAMATION
SOUTHERN NEVADA WATER PROJECT - NEVADA

WHITNEY LATERAL
FLAMINGO FLOW CONTROL STATION
FLOW CONTROL VALVE MODIFICATION
FOR AIR INTAKE

DESIGNED D. W. Beard SUBMITTED
DRAWN
CHECKED D. W. Beard RECOMMENDED
APPROVED
CHIEF, MECHANICAL BRANCH

DENVER, COLORADO. Nov. 27, 1974 | 952-D-1025

Figure 4

Row 4, tap 4 is located at the junction between the retainer and seal. Note thickness of protective coating at tap 4. Row 4, tap 5 is located near the mid point of the retainer.

Figure 5

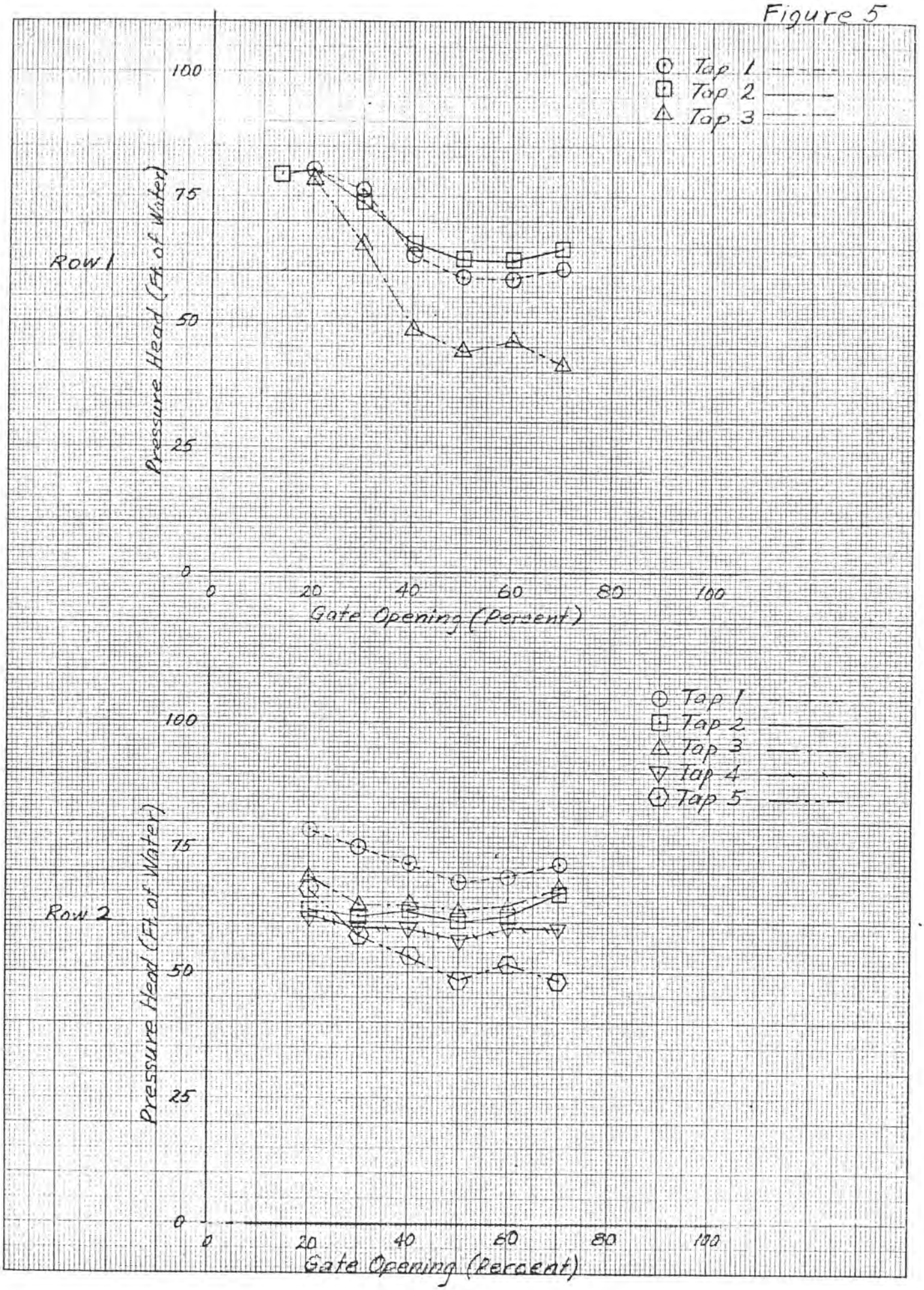
Tap 1
Tap 2
Tap 3
Row 1
Pressure Head (Ft. of Water)
100
75
50
25
0
0
20
40
60
80
100
Gate Opening (Percent)
Tap 1
Tap 2
Tap 3
Tap 4
Tap 5
Row 2
Pressure Head (Ft. of Water)
100
75
50
25
0
0
20
40
60
80
100
Gate Opening (Percent)

Figure 6

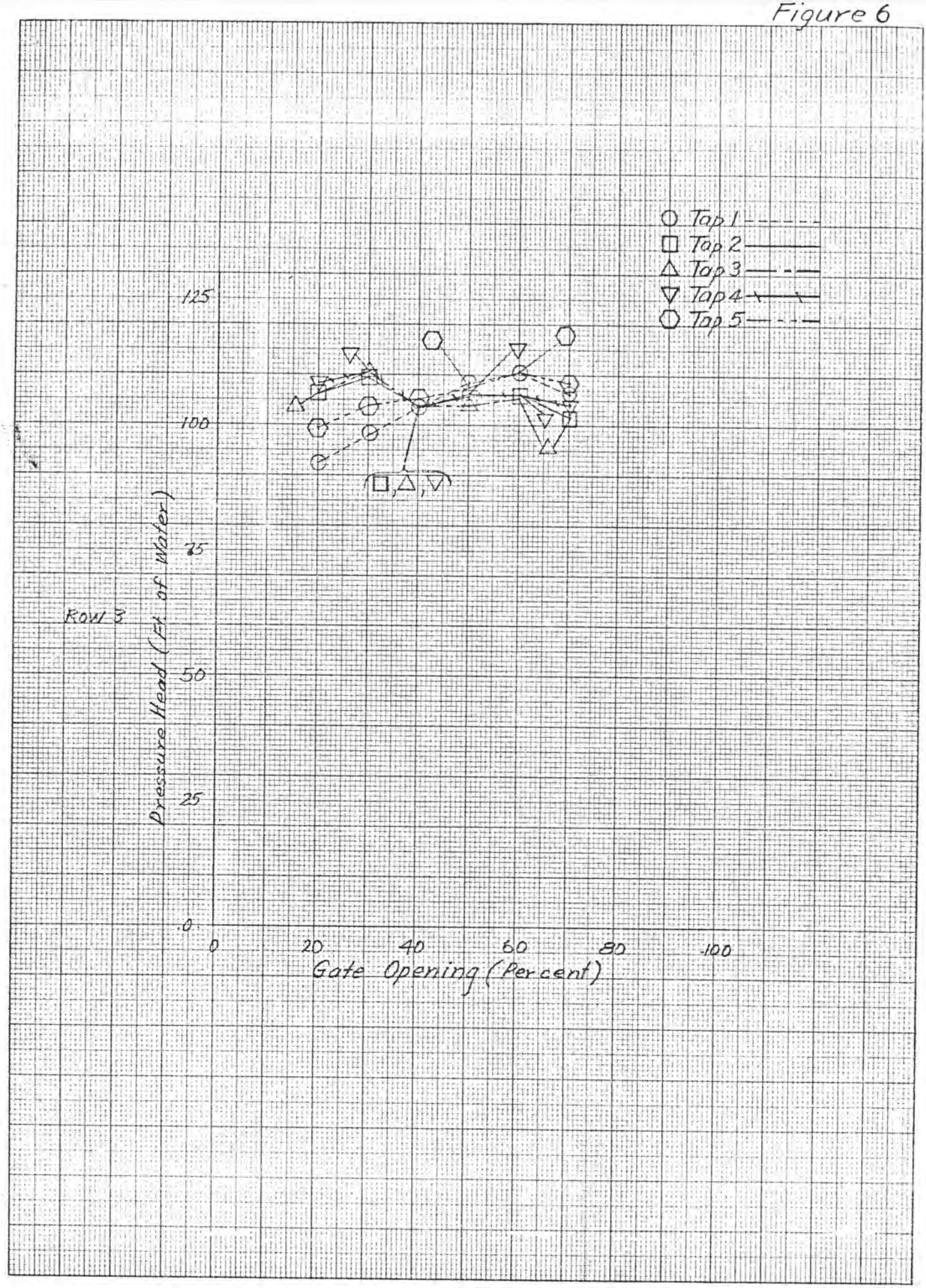
Tap 1
Tap 2
Tap 3
Tap 4
Tap 5
125
100
75
50
25
0
Pressure Head (Ft. of Water)
ROW 3
0
20
40
60
80
100
Gate Opening (Percent)

Figure 7

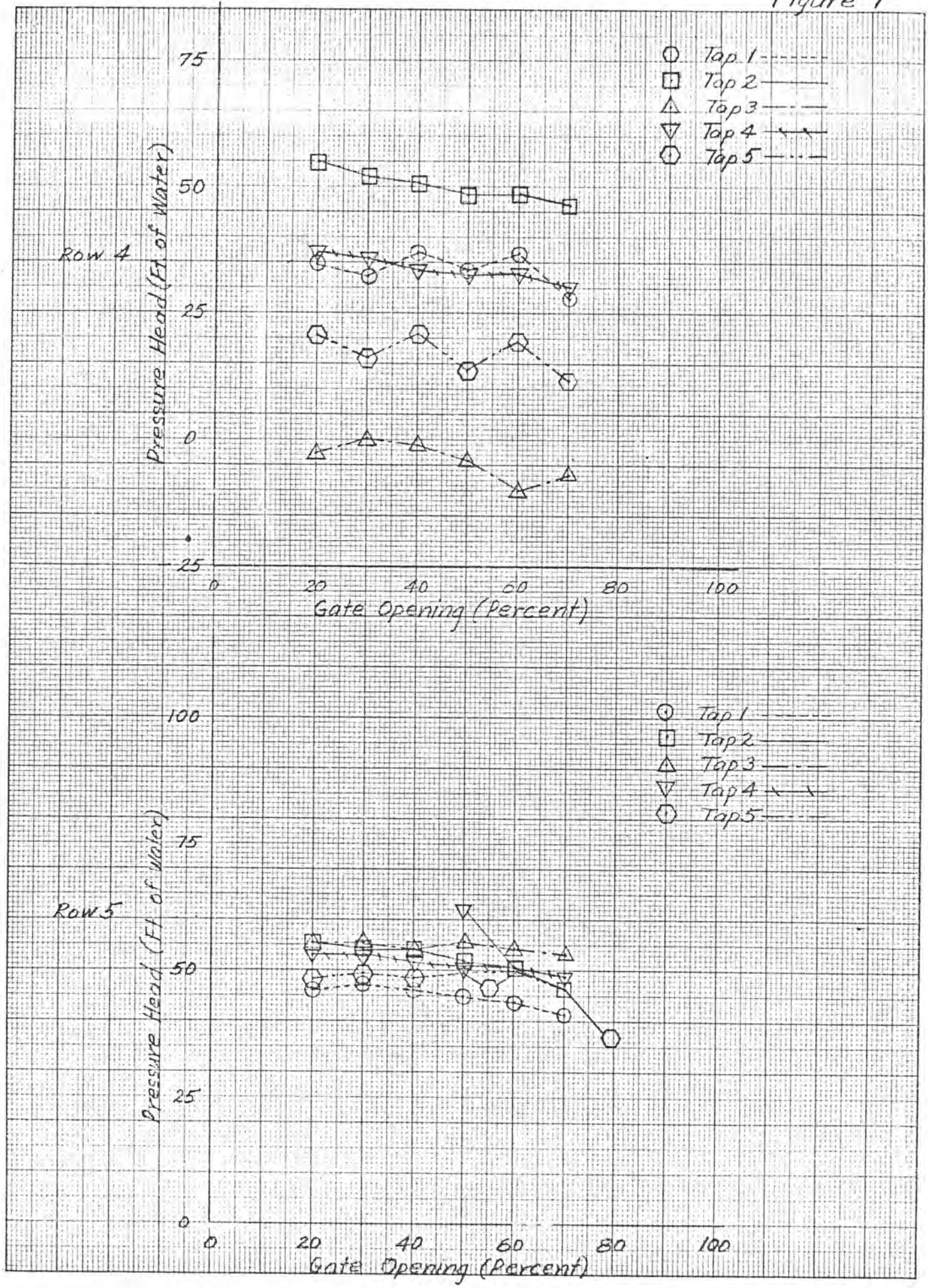
Tap 1
Tap 2
Tap 3
Tap 4
Tap 5
Row 4
Pressure Head (Ft. of Water)
75
50
25
0
-25
0
20
40
60
80
100
Gate Opening (Percent)
Tap 1
Tap 2
Tap 3
Tap 4
Tap 5
Row 5
Pressure Head (Ft. of Water)
100
75
50
25
0
0
20
40
60
80
100
Gate Opening (Percent)

Figure 8

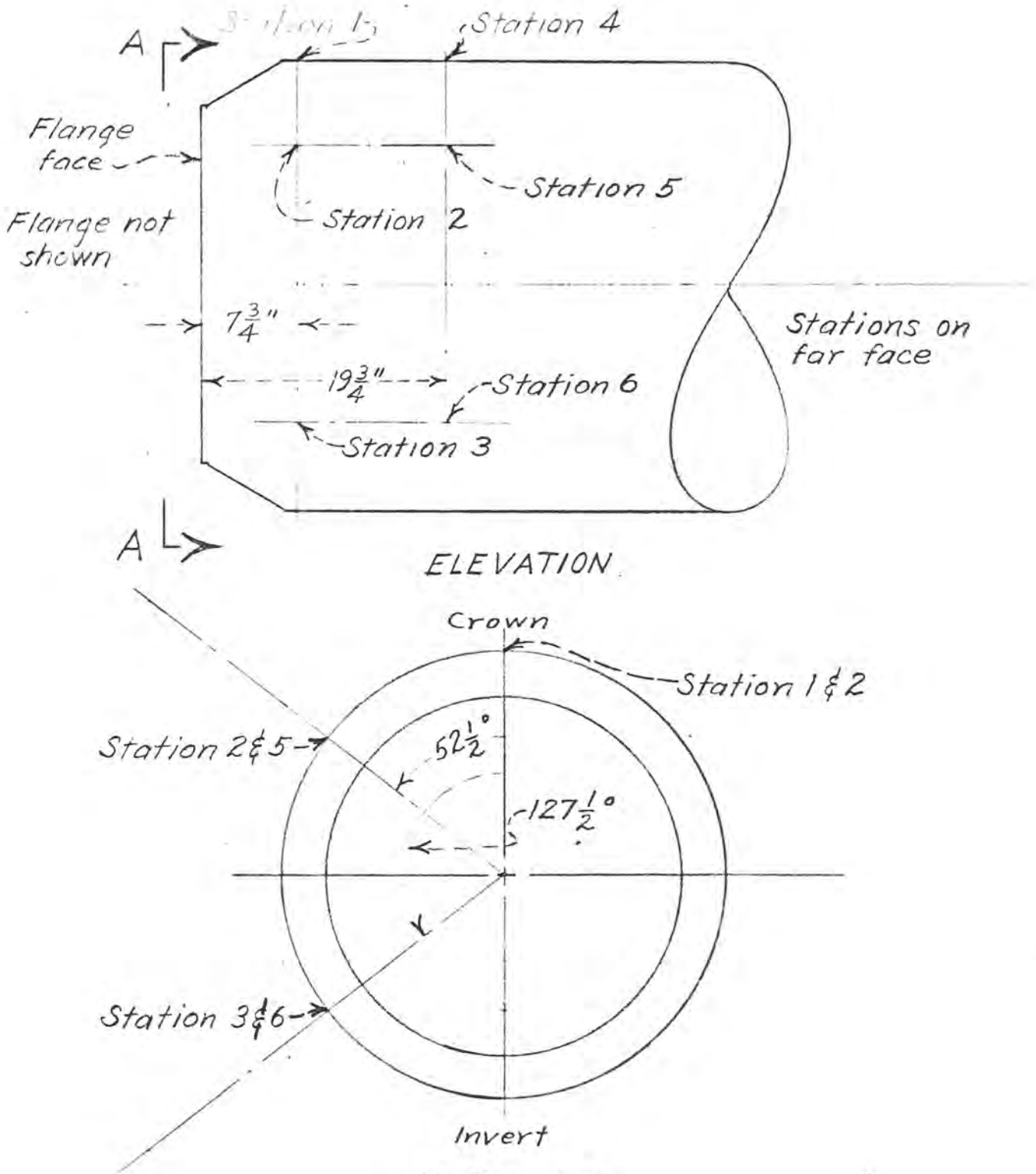

SOUND LEVEL MEASUREMENT STATION LOCATIONS

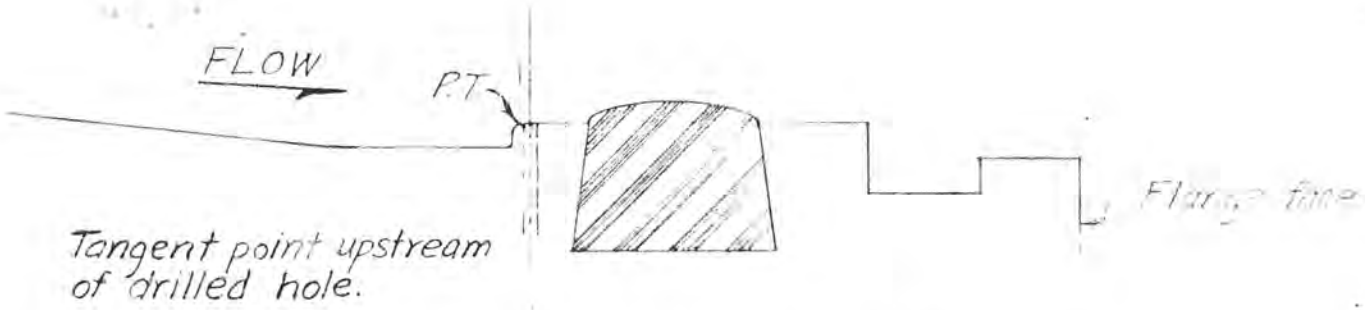

SLIGHTLY ROUNDED RETAINER

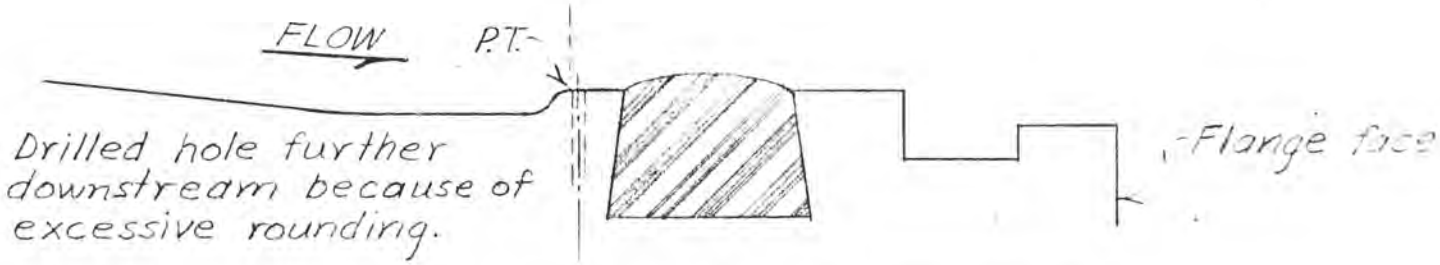

HEAVILY ROUNDED RETAINER

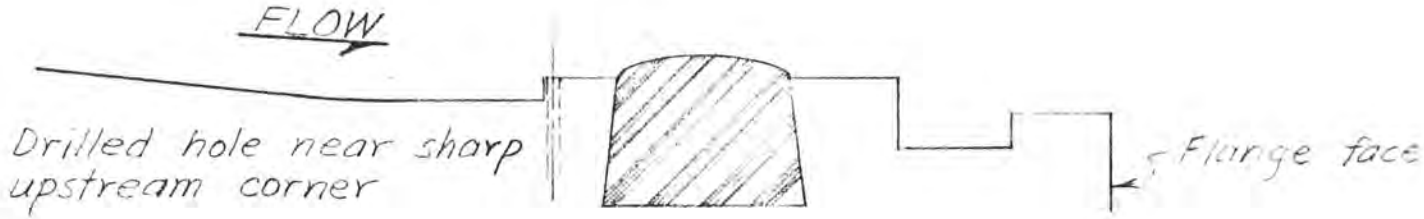

SHARP CORNERED RETAINER

HOLE PLACEMENT FOR OPTIMUM AIR INJECTION

Figure 9

Figure 10

Crown of downstream conduit showing minor cavitation erosion. Picture taken looking toward the 1:30 O'clock position.

Figure 11

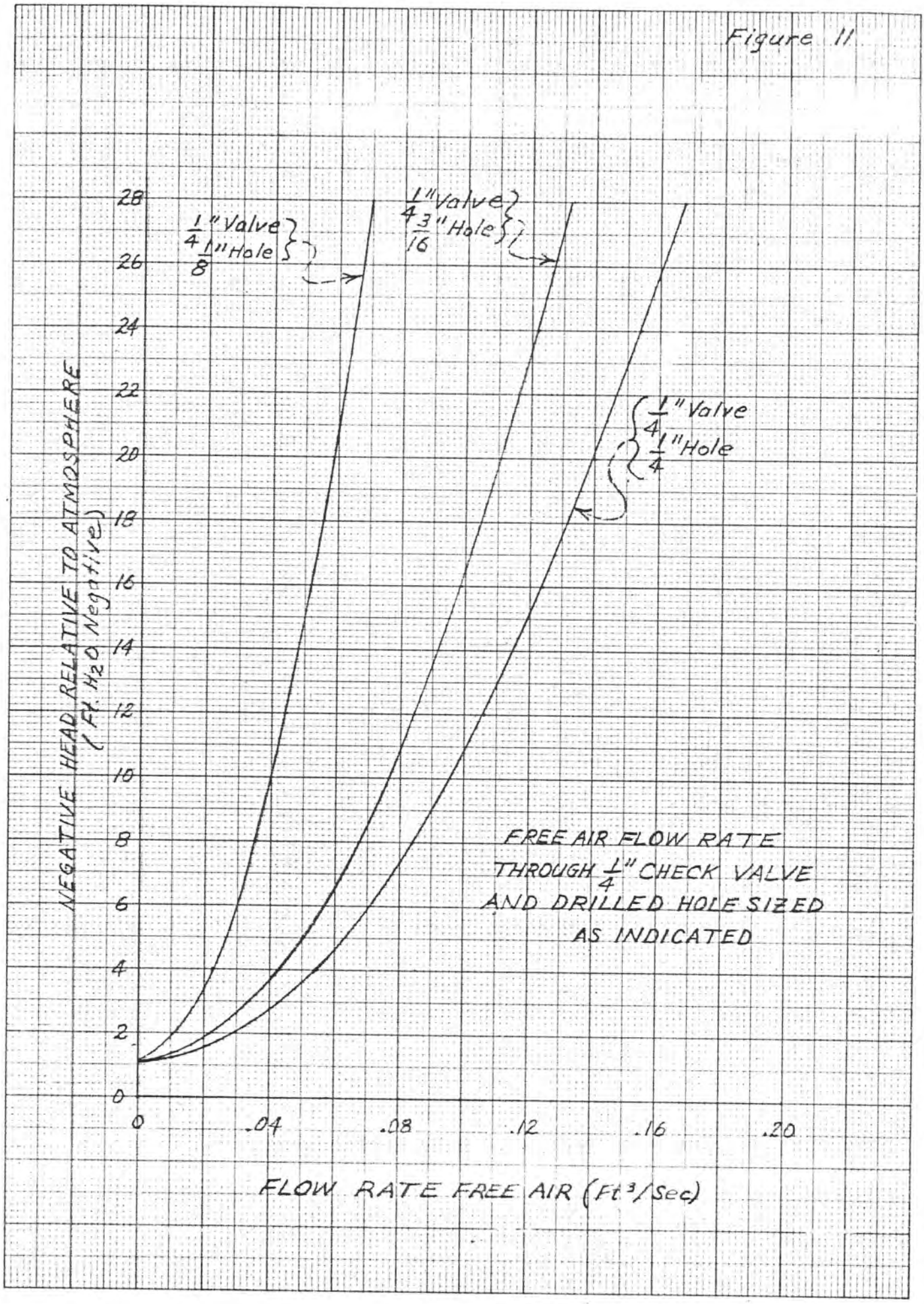
1/4" Valve
1/8" Hole
1/4" Valve
3/16" Hole
1/4" Valve
1/4" Hole
FREE AIR FLOW RATE
THROUGH 1/4" CHECK VALVE
AND DRILLED HOLE SIZED
AS INDICATED
NEGATIVE HEAD RELATIVE TO ATMOSPHERE
(Ft. H2O Negative)
FLOW RATE FREE AIR (Ft³/Sec)
0
2
4
6
8
10
12
14
16
18
20
22
24
26
28
0
.04
.08
.12
.16
.20

Figure 12

Paint removed by cavitation erosion. Paint also removed by rubbing between disc and seal. View from downstream looking toward 8:15 O'clock position.

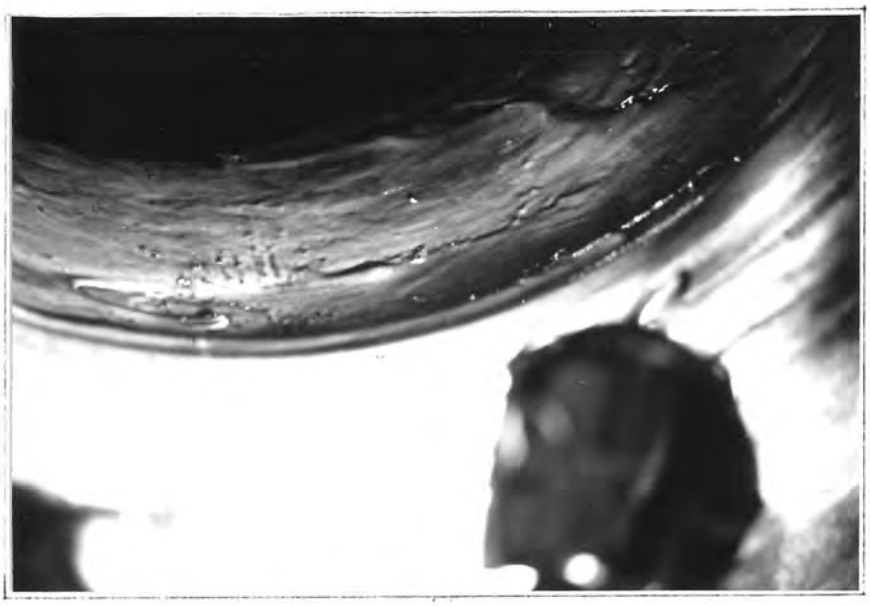

13A. Rough protective coating just upstream of seal retainer. Photo of 6 O'clock valve position from downstream.

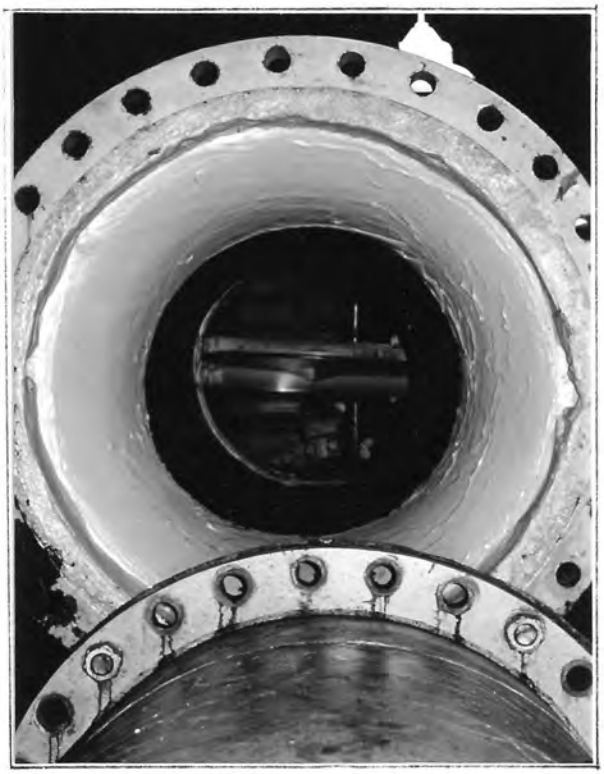

13B. Rough coating on upstream side of venturi. Note right side rougher than left.

Figure 14

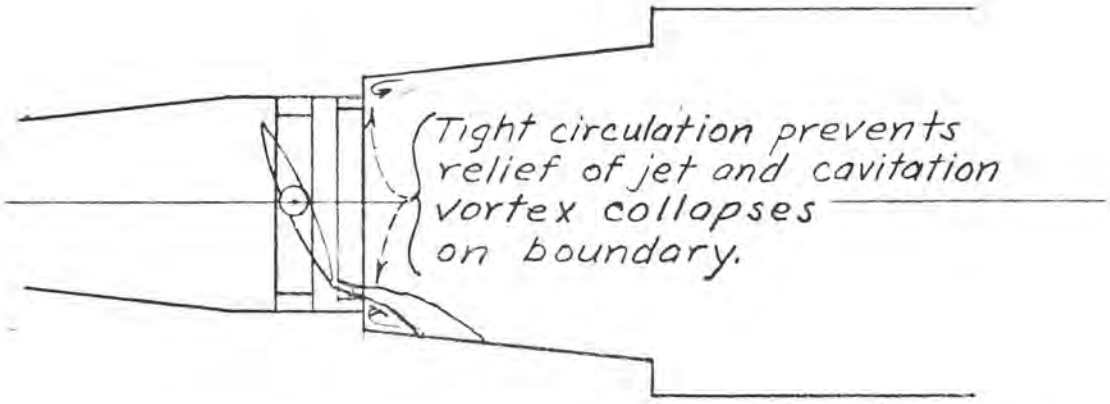

EXISTING CONFIGURATION

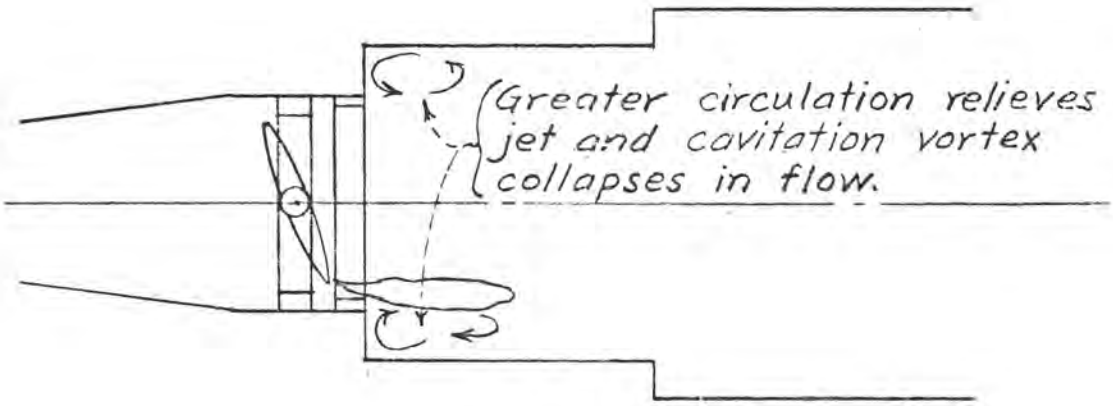

PROPOSED CONFIGURATION

SUGGESTED CHANGES FOR VALVES
36-6 & 42-7

PROCEDURE FOR ADJUSTING CLOSURE TIMES FOR
TWO SPEED GUARD VALVES
30 BF-4 and 30 BF-5

The following information is provided to aid in adjusting the low speed limit switch. Adjustment is necessary to prevent excessive water hammer pressures. The slow speed closure should be adjusted for the following times, depending on discharge:

Discharge	Time (seconds)	Limit Switch 11 Closed
50 ft^3/S	725	72.5° open to closed
45 ft^3/S	660	66° open to closed

The adjusting procedure will be discussed for a maximum flow of 45 ft^3/S.

There are two dual rotor assemblies in each valve operator (Figure 1). Rotor assemblies 1 and 2 are in the upper portion of the gearcase and assemblies 3 and 4 are in the lower portion.

Rotor 1 contains switches 1 through 4 which are the open group and should not be adjusted. Rotor 2 contains switches 5 through 8 which are the close group and should not be adjusted. Switches 9 through 12 on rotor 3 are for two speed valves. Switch 11 is to be adjusted to effect the slower closure.

Limit switch 11 is to be closed below 66° gate opening and open above 66° gate opening. Limit switch 11 may be identified as having one conductor connected to the CRA relay coil. The CRA relay will be energized when switch 11 is closed.

The adjusting procedure is attached and is for setting the open limit switch. According to the local manufacturers representative, changes to three items in the instructions will make them appropriate for the speed limit switch.

Item 2. - Operate the valve by hand until opened to 66° (Verify on position indicator) for a maximum discharge through the valve of 45 ft^3/S as requested. Note direction in which the gear shaft, part 6, is turning. This slotted shaft is extended through the gearcase and can be seen just above the rotor connected to the contactor coil.

Item 3. - Do not back off the valve.

From 7, connect the current and check the setting as follows:

a) Run the valve to 80 or 90 degrees open position

b) Press the close button, make sure valve is moving in the "close" direction

c) Allow limit switch to energize the low speed circuit

d) Verify the point where the limit switch closed

e) Check time of closure with a stopwatch. 66° open to fully closed in 660 seconds for a maximum flow of 45 ft^3/S through the valve

ROTOR TYPE GEARED LIMIT SWITCH

1. Make certain electric current is off.

2. Open valve by hand until valve disc strikes back seat. Note direction in which the gear shaft, Part #6, is turning. This slotted shaft is extended through the gear case and can be seen just above the rotor connected to the open contactor coil.

3. Back valve off to allow for coast of moving parts.

4. With the valve in this position, declutch the drive pinion, Part #5, by inserting a screwdriver in setting rod, Part #26, and turning clockwise until it is tight. This will allow the bronze cut gear, Part #9, nearest drive pinion to be turned by inserting screwdriver in slots provided in gear shaft, Part #6.

5A. Turn this shaft, in same direction as noted when valve was opened, until contact on rotor, Part #27, connected to open contactor circuit opens.

5B. In the event this contact is already open, turn this shaft in the opposite direction until it closes; then back off on the shaft until contact opens.

6. Unscrew setting rod, Part #26, until reaching a firm stop but do not jam. This train of gears and contacts are now set.

7. Connect the current and check this setting as follows:

(a) Run the valve to mid-position by hand.
(b) Press the "open" pushbutton—make sure valve is moving in the "open" direction.
(c) Allow limit switch to stop the motor.
(d) After motor has stopped, turn the valve by hand to be certain that there is sufficient clearance between the point at which the valve comes to rest and the back seat.

8A. TORQUE SEATED VALVES (Gates, Globes, etc.). Run the valve to the closed position first making sure the torque switch is properly wired into the closing circuit (see procedure for setting torque switch). To set the position for operation of the indicating light, back valve off seat to desired position and set the "closed" light contact following the same procedure outlined under 4, 5A, 5B, and 6.

8B. POSITION SEATED VALVES (Butterfly, Plug, Sluice Gates, etc.). After wiring the torque switch contact and the contact connected to the close contactor coil in series, close the valve by hand until the valve reaches its full closed position or until the mechanical stops built into the valve are reached. Back off the valve from this position to allow for coast of moving parts. Then follow procedure as outlined under 4, 5A, 5B, and 6. (Note—the torque switch on position seated valves acts as a protective device and will interrupt the control circuit if an obstruction is met during closing cycle. In no case should the LimiTorque, when applied to butterfly, plug valves or sluice gates, be allowed to go against valve stops under full power unless valve manufacturer has given approval.)

9. When settings are complete, setting rod, Part #26, should remain in position as shown in Step #6.

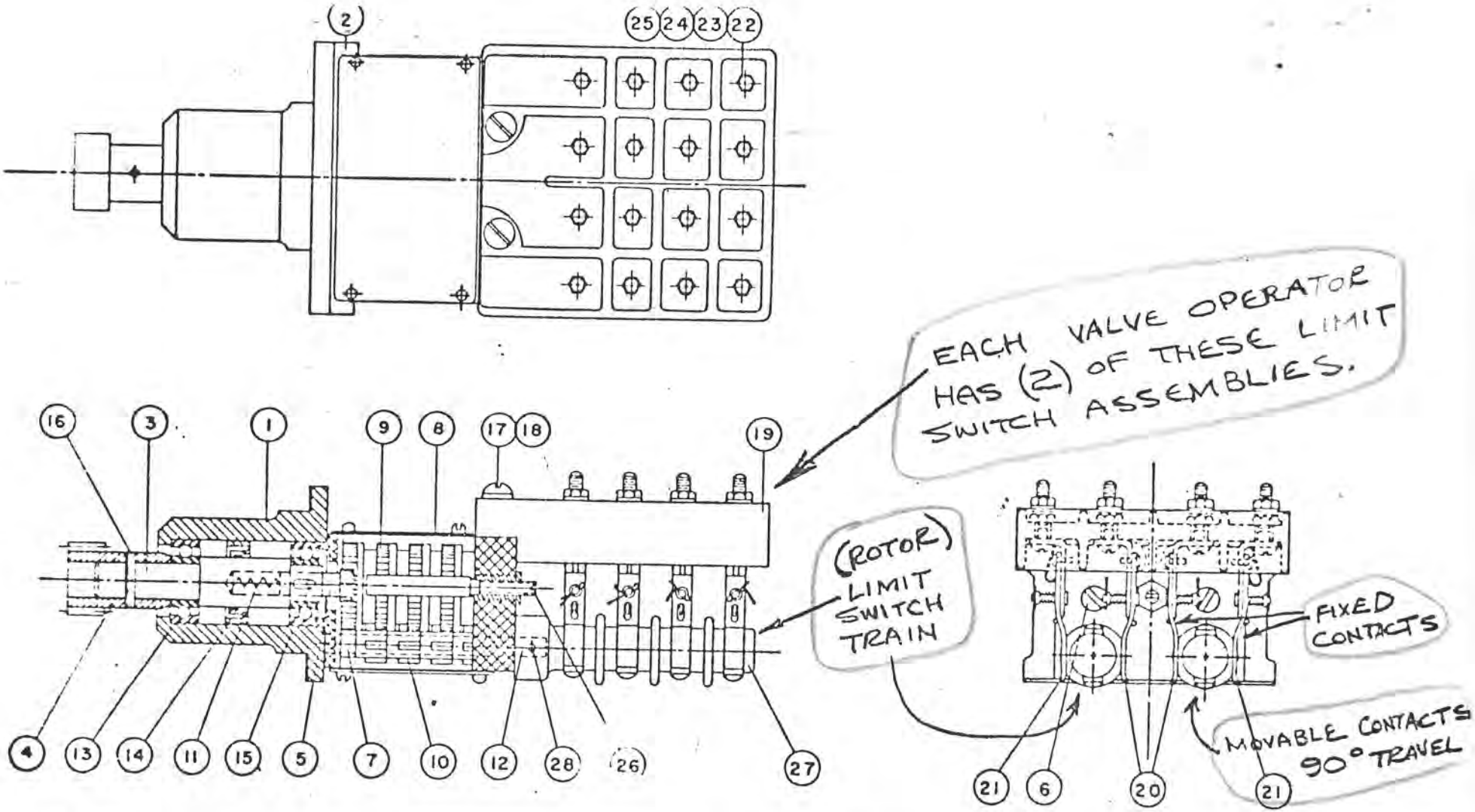

PARTS LIST		PC NO	NAME	PC NO	NAME	PC NO	NAME
PC NO	NAME	7	INTERMITTENT PINION SHAFT	15	PIN	23	HEX NUTS
		8	G.L. FRAME COVER	16	TAPER PIN	24	LOCKWASHER
1	CARTRIDGE	9	INTERMITTENT GEAR	17	LOCKWASHER	25	SW'B'D WASHER
2	GEAR FRAME	10	INTERMITTENT PINION	18	SCREW	26	SETTING ROD ASSY.
3	DRIVE SLEEVE & SHAFT	11	DECLUTCH SPRING	19	SWITCH BASE	27	ROTOR
4	DRIVE PINION (MAIN)	12	STEM SPUR PINION	20	R.H. FINGER ASSEMBLY	28	COTTER PIN
5	DRIVE PINION (SECONDARY)	13	BALL BEARING	21	L.H. FINGER ASSEMBLY		
6	INTERMITTENT GEAR SHAFT	14	OIL SEAL	22	RD.HD.SCREW		

Figure 1

Figure 2

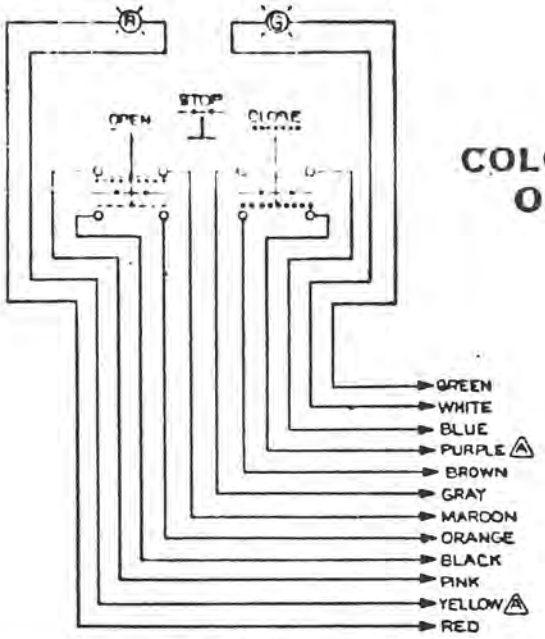

15-482-0001-2

COLOR CODE OF R-66

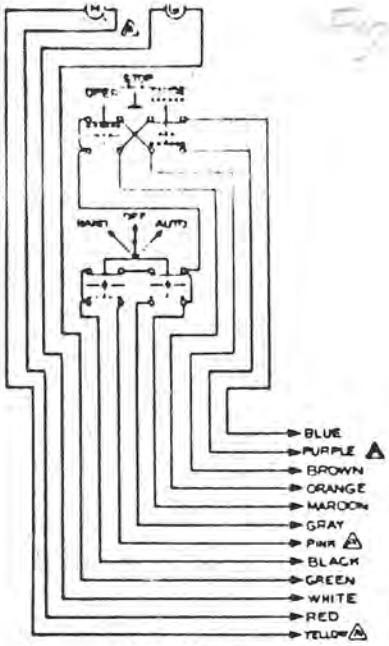

15-482-0005-2

LIMIT SWITCH PROGRAM

TYPICAL WIRING DIAGRAM OF R-66 FOR LIMITORQUE

VALVE SHOWN IN FULL OPEN POSITION

ROTOR	CONTACT	LIMIT SWITCH CONTACT DEVELOPMENT — VALVE POSITION: FULL OPEN	A	B	FULL CLOSED	FUNCTION
1	1	—	—	—	—	BY-PASS CIR.
	2	- -	- -	- -	- -	SPARE
	3	—	—	—	—	IND. LIGHT
	4	- -	—	—	—	OPEN LIMIT
2	5	- -	- -	- -	—	BY-PASS CIR.
	6	- -	- -	- -	—	SPARE
	7	—	—	—	- -	IND. LIGHT
	8	—	—	—	—	CLOSE LIMIT
3	9	—	—	- -	- -	SPARE
	10	- -	- -	—	—	SPARE
	11	- -	—	—	—	SPARE
	12	—	—	—	- -	SPARE
4	13	- -	- -	- -	—	SPARE
	14	- -	- -	—	—	SPARE
	15	—	—	- -	- -	SPARE
	16	—	—	—	- -	SPARE

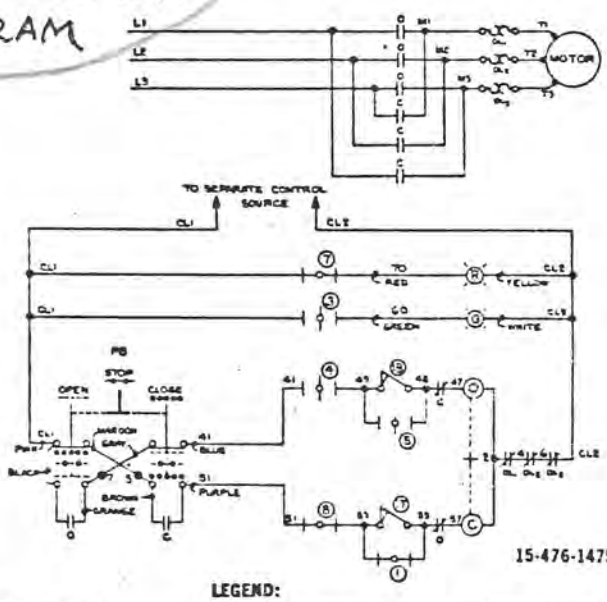

15-476-1475-3

17 Closing Torque switch interrupts control circuit if mechanical overload occurs during closing cycle.

18 Opening torque switch interrupts control circuit if mechanical overload occurs during opening cycle.

NOTES:

1. ———— Close contact
2. - - - - Open contact
3. Rotors 3 & 4 can be set at valve position full open, full closed or any position in between as indicated by points A & B.

LEGEND:

O—Open Contact
C—Close Contact
Ⓘ—Opening Coil
Ⓒ—Closing Coil
OL—Overload Relays (1, 2 & 3)
+—Mechanical Interlock
Ⓡ—Red Indicating Light
Ⓖ—Green Indicating Light
PB—Pushbuttons (Open-Stop-Close)

SWITCH CONTACT RATINGS

VOLTAGE	AMPS AC	AMPS DC
120	6.0	2.2
230	3.0	.55

When the R-66 is furnished with Limitorque Valve Controls, the lights will be on the same control voltage as the Limitorque operator unless otherwise specified, thereby requiring the use of OPTIONAL transformers or resistors.

LIMITORQUE
VALVE CONTROLS
Automated Valve Operators

Philadelphia Gear Corporation ■ King of Prussia, Pa. 19406 ■ (215) 265-3000

2 Speed Butterfly Valve Control Circuit (typ.)

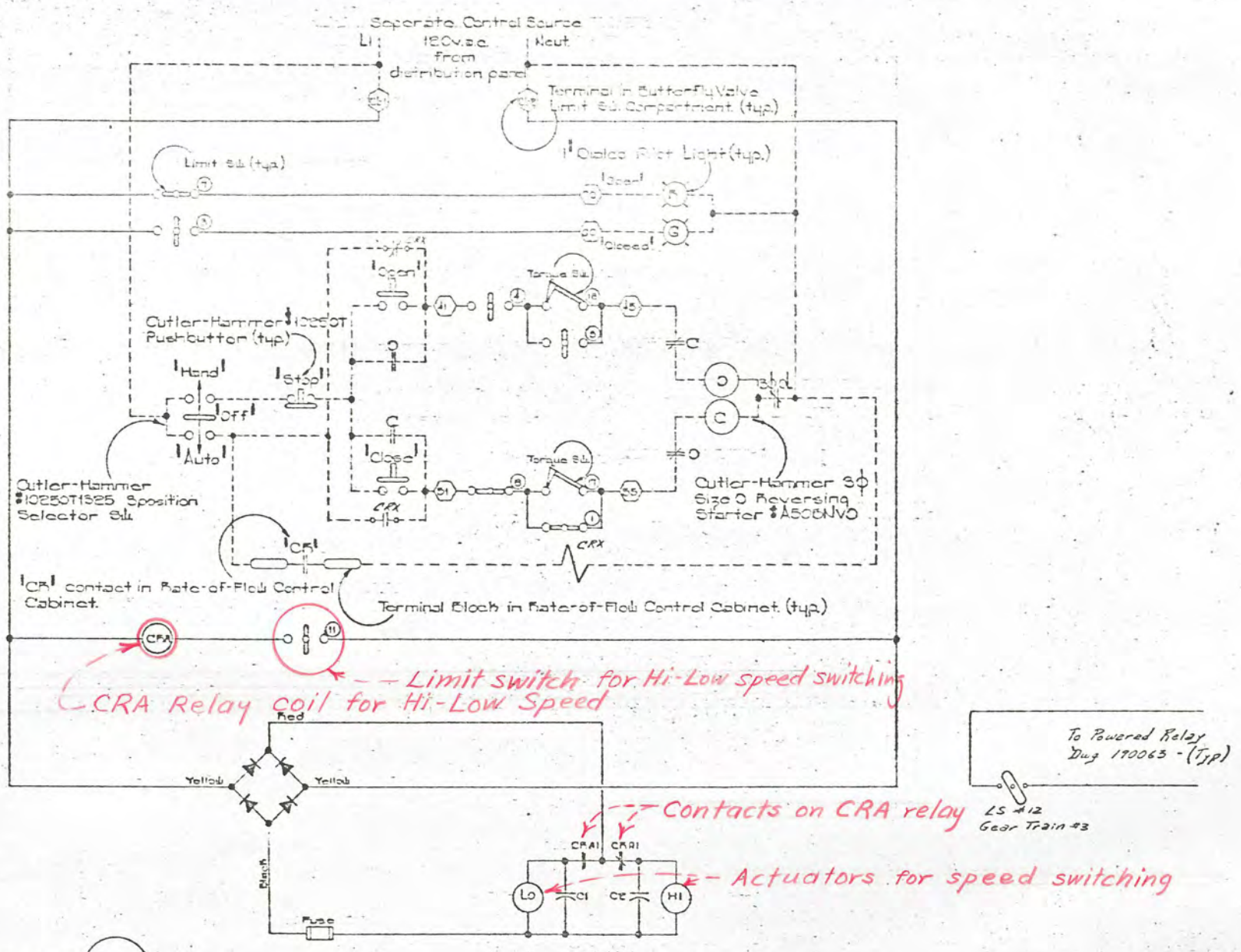

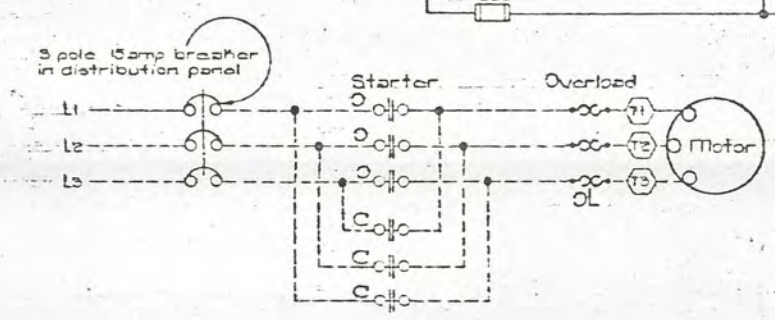

Notes:

1. Dashed lines indicate wiring external to Butterfly Valve Operator.
2. Selector Sw., Pushbuttons, Starter & Lights to be mounted & wired in distribution panel by others.
3. 2 Speed Butterfly Valves at following Rate-of-Flow Control Stations:

1. Sahara	4. G
2. Flamingo	5. GB
3. 3	6. GC

4. See instruction book for limit switch contact development.

Single Speed Butterfly Valve Control Circuit (typ.)

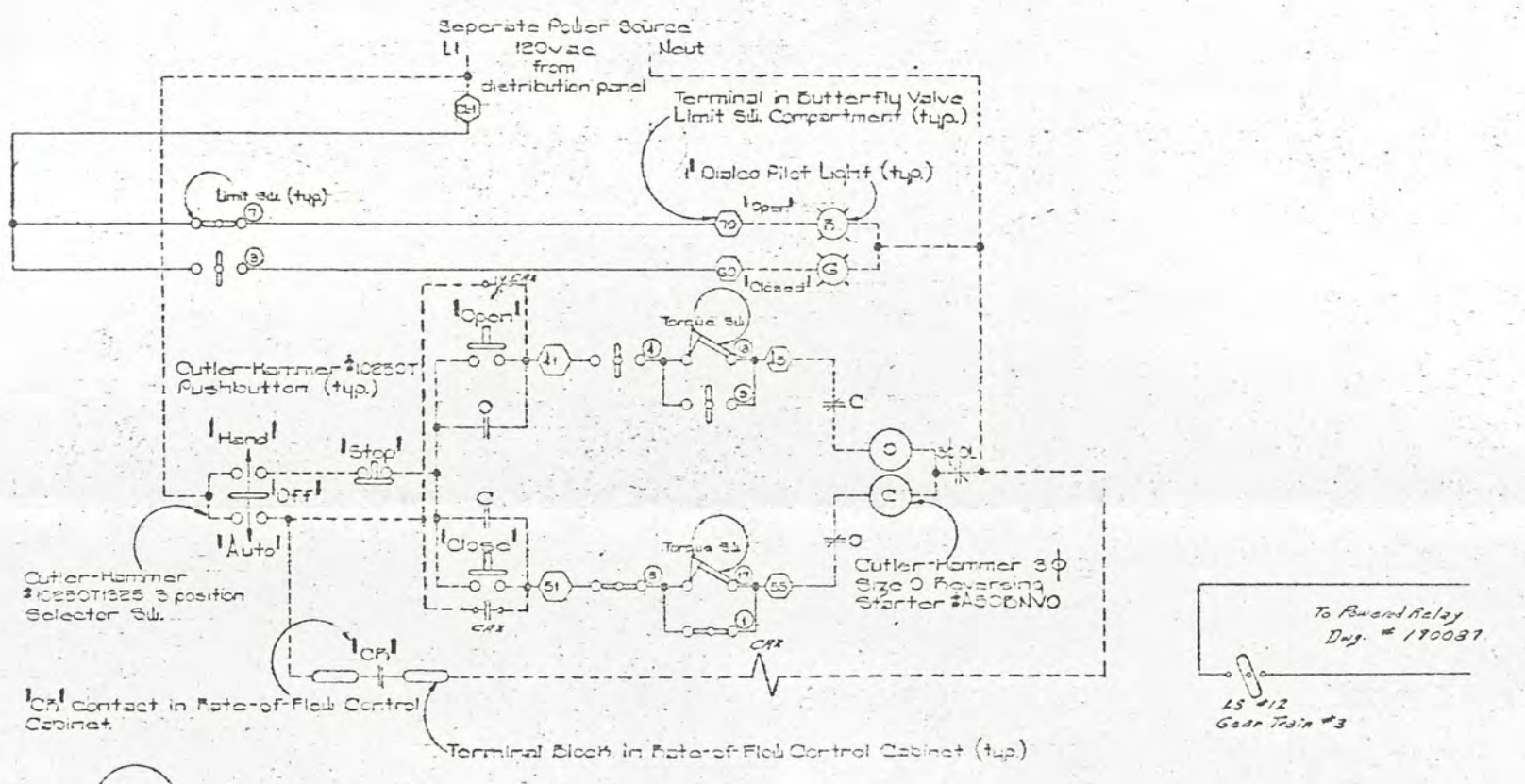

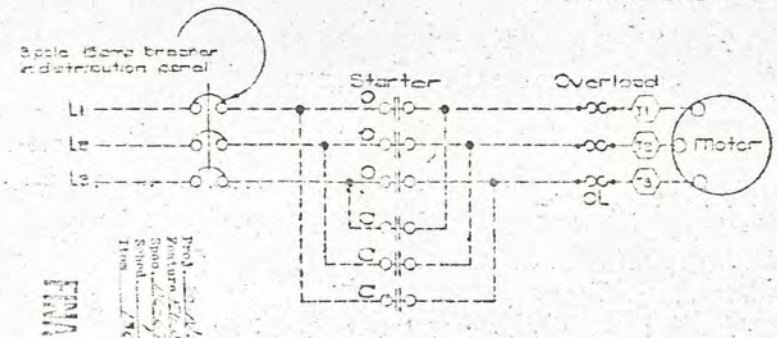

Notes:

1. Dashed lines indicate wiring external to Butterfly Valve Operator.
2. Selector Sw., Pushbuttons, Starter & Lights to be mounted in distribution panel by others.
3. Single Speed Butterfly Valves at Rate-of-Flow Control Station No. GA only.
4. See instruction book for limit switch contact development.

Figure 3

Southern Nevada Water Project, Nevada
U.S.B.R. Spec. DC-6781-A part 1a, Flow Control
A.J.V. Construction Co.-General Contractor
Boyce & Crail Construction Co.-Mech. Contractor
Control Sales Inc.-Sales Agent

Butterfly Valves
Motor Starter Circuits

No. A-10102

FINAL