PAP 287

BUREAU OF RECLAMATION
HYDRAULIC LABORATORY
OFFICE
FILE COPY
WHEN BORROWED RETURN PROMPTLY

PAP 287

EMERGENCY REDESIGN OF SILVER JACK SPILLWAY

PAP 287

By

G. W. Center

U.S. Bureau of Reclamation

and

T. J. Rhone

U.S. Bureau of Reclamation

Prepared for presentation at the American Society of Civil Engineers
Water Resources Engineering Conference in Washington, D.C.,
January 29 - February 2, 1973

PAP 287

EMERGENCY REDESIGN OF SILVER JACK SPILLWAY

G. W. Center 1/

T. J. Rhone, M. ASCE 2/

Introduction

Silver Jack Dam, a feature of the Bostwick Park Project in western Colorado, is located on Cimarron Creek about 25 miles (40.25 km) southeast of Montrose. The earthfill dam has a height of 150 feet (45.7 m) above the creekbed, a length of 1,070 feet (326.2 m) at the crest, and a fill volume of 1,260,000 cubic yards (963,500 cu m). The principal hydraulic features are a spillway and an outlet works located on the right abutment.

Construction of the hydraulic structures was well advanced in the spring of 1969 when a major earth movement occurred along the right abutment. The slide extended into the area occupied by the stilling basin causing severe damage to the structure. Since the contractor was engaged in constructing the spillway at that time, decisions had to be made immediately to prevent a major interruption in the work.

This paper describes the geologic condition at the site, the extent of the slide and subsequent damage, and the emergency redesign of the spillway stilling basin.

Geologic Conditions Affecting Structure Location and Design

Glaciation is most conspicuous in the general area of the damsite. The glacial deposits extend to about the 9,900-foot (3,015-m) contour on the sides of the

---

1/ Civil Engineer, Division of Design, Bureau of Reclamation, Denver, Colorado
2/ Hydraulic Engineer, Division of General Research, Bureau of Reclamation, Denver, Colorado

old channel and to at least 100 feet (30.5 m) below the stream channel at the damsite area. The glacial till consists of andesite, San Juan tuff-agglomerate of Tertiary age that is about 2,000 feet (610 m) thick and forms the rims of the Cimarron Creek drainage basin, and the Mancos shale of Cretaceous age which underlays the San Juan tuff unconformably. Thus, a boulder clay soil results as a product of these two formations. The till is from 200 to 800 feet (61 to 244 m) thick, well packed, and contains varying concentrations of rock fragments from the San Juan tuff-agglomerate.

Silver Jack Dam was constructed across a rather narrow valley that had been eroded into the glacial till to a depth of 300 to 400 feet (91 to 122 m). A hole drilled in the valley floor at the dam axis to a depth of 117 feet (35.7 m) did not encounter bedrock. However, alluvial gravels were found to a depth of 30 feet (9.1 m).

Some old landslides were recognized on both abutments. However, these were thought to be superficial.

Further geologic explorations made for obtaining data for specifications designs revealed that landslides along the left abutment had been more extensive than originally assumed. Fragments of Mancos shale were found interspersed with glacial material in some drill holes. In others, large blocks of shale many feet in thickness were found resting upon glacial materials or in a reworked condition. The Mancos shale bodies were thought to have been moved from areas to the west of the damsite by landslides of large magnitude. Confirmation of this was obtained when a 12- by 12-foot (3.7- by 3.7-m) test pit was excavated with a clamshell bucket at the location of the spillway stilling basin near the right bank of Cimarron Creek in June 1968.

This test pit pierced a large block of clay and shale 7 feet (2.1 m) in thickness. The block had apparently been transported across the ancient channel of Cimarron Creek by landslides originating far to the west.

Because of the extent of old landslides along the left abutment, it was decided to locate the outlet works on the right bank of Cimarron Creek where all of the structures would rest upon undisturbed glacial till.

Geologic explorations also revealed that both abutments were completely saturated with water. The glacial till was found to be unusually tight by water tests performed during the drilling at the site. This was thought to result from the clay component of the glacial till.

In order to minimize the width of sidehill cut and to provide a barrel-type structure which would be capable of spanning possible soft areas of foundation, it was decided to use a conduit-type spillway with a morning glory inlet structure. An alinement for the spillway was selected to the right of the outlet works.

Description of Spillway

The spillway is a 41-foot (12.48-m) diameter morning glory with its crest at elevation 8925.60 (2722.3 m), 136 feet (41.50 m) above the creek channel, Figure 1. Flow from the spillway crest falls about 44 feet (13.4 m) into a 16.5-foot (5.03 m) diameter circular conduit. The circular conduit is about 563 feet (171.5 m) long and connects to a diverging chute leading to the stilling basin. The stilling basin floor is about 147 feet (44.8 m) below the spillway crest.

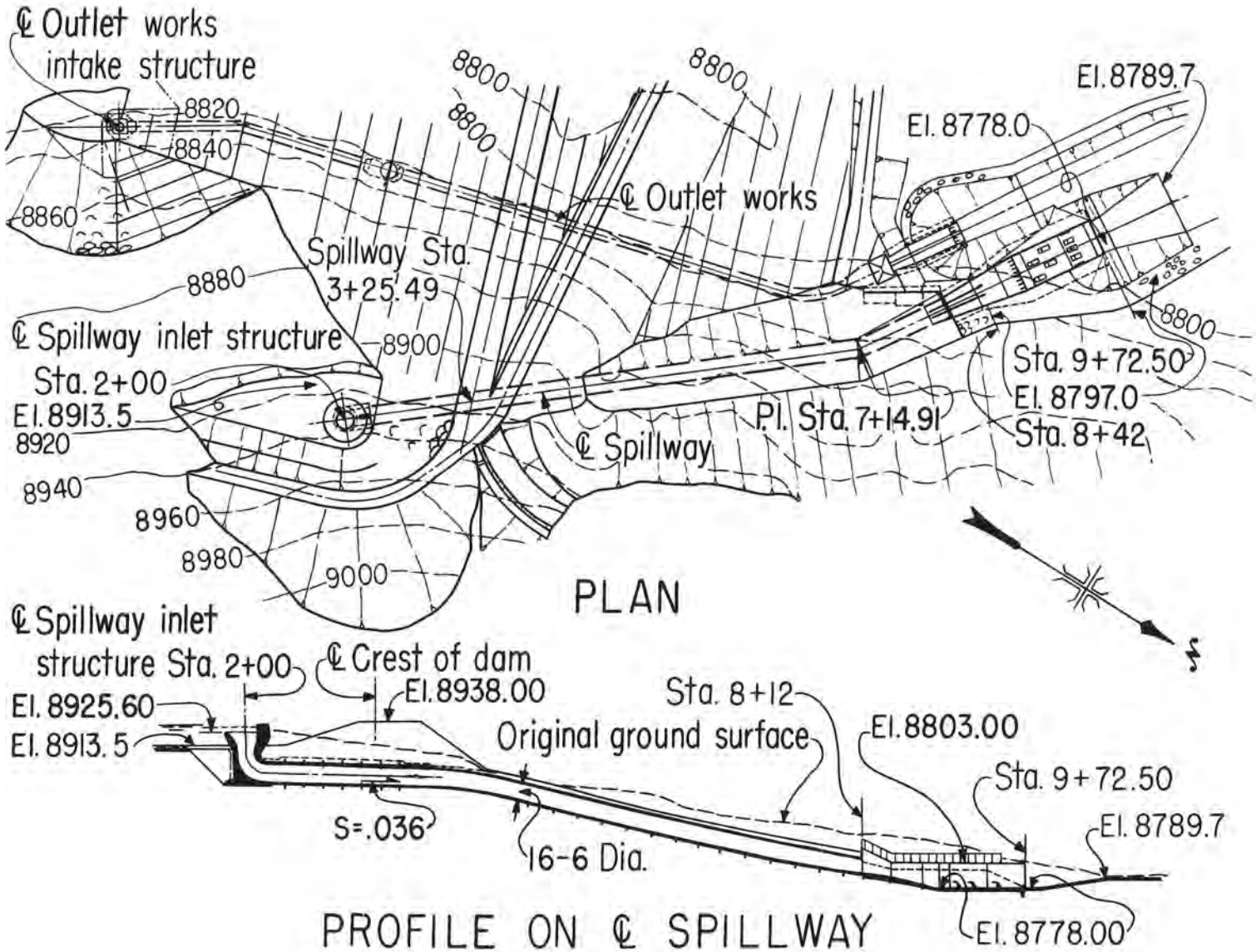

PROFILE ON ℄ SPILLWAY

SILVER JACK DAM

SPILLWAY AND OUTLET WORKS

GENERAL PLAN AND SECTIONS

FIGURE 1

Conditions During Construction and Changes

From the commencement of work on the open cut excavation for the spillway and outlet works, the rainy weather and saturated condition of the glacial materials made construction very difficult. It became apparent that the 15 percent of the foundation materials passing the No. 200 sieve was not clay but a nonplastic material classed as rock flour. This material, which had no cohesive properties, filled the voids to block the flow of water. As a result, the glacial till was very unstable when saturated. Surfaces excavated on a small incline would flow to fill any small depressions when subjected to a vibration due to foot traffic. Pockets of semifluid material would break and flow down cut slopes to relieve local internal hydrostatic pressure.

The open cut excavation for the spillway and outlet works had been completed above stream level by June 1967. Work continued on construction of the outlet works and excavation for the spillway chute and stilling basin. Late in the fall, surface cracking was observed in the cut slope to the right of the spillway about 300 feet (91 m) downstream from the axis of the dam. An attempt was made to improve the stability by flattening the excavated surface. However, the work was stopped because of freezing.

In the spring of 1968, the melting snow saturated the slopes of the exposed cut in this area and produced an unstable, semifluid movement along the surface. Some cracking was observed along the access road to the crest of the dam. An examination of the site revealed that the spillway cut had crossed the flank of an old landslide of about 1,000 feet (300 m) in length.

The plans for the spillway were altered. The conduit was extended about 150 feet (46 m) farther downstream, the sidehill excavation was resloped to

a 2:1 slope, a drainage system was provided along the exposed surface, and a 6-foot (1.8-m) layer of sand and gravel was placed on the sidehill cut slope. This layer was intended to hold fine glacial materials in place and collect any seepage.

A further examination of the cut slope along the right side of the spillway revealed a 2-inch (50-mm) thick zone of bluish, pulverized material defining the surface along which a large body of glacial material had rotated as a large slip circle several hundred years in the past. This 2-inch (50-mm) zone was generally slightly above the spillway chute floor and about 14 feet (4.3 m) above the stilling basin floor.

Reference points were installed at different locations across the face of the sidehill cut. Observation over a period of time indicated a bulging of the lower face and a sagging near the top of the cut. However, the observed movement of the face had become negligible after backfill had been placed along the right side of the spillway chute and stilling basin by December 1968 when construction stopped for the winter.

The contractor resumed operations in April 1969. During the night of April 22, 1969, a major earth movement occurred involving about 700,000 tons (635,000 metric tons) of glacial material from about 9.5 acres (3.8 hectares). The toe of the slide extended into the area occupied by the spillway stilling basin and outlet channel. The stilling basin walls were broken and several sections of conduit were badly cracked, Figures 2, 3, and 4.

Since the contractor was engaged in constructing the spillway at that time, decisions had to be made immediately to prevent a major interruption in the work.

Photo P860-427-905NA General view of major slide movement from Station 10+00 at left side of photo to Station 6+00 on right side of photo.

Figure 2

Photo P860-427-902NA View looking downstream showing destruction of original stilling basin caused by major slide movement.

Figure 3

Photo P860-427-899NA View looking upstream showing condition of right stilling basin wall following major slide movement.

Figure 4

After examination of the damage, it was decided to remove the cracked sections of the spillway conduit and to construct an elbow, a new chute, a new stilling basin, a retaining wall, and a new outlet channel to the left of the damaged portions of the spillway.

The stilling basin was originally designed as a Type II hydraulic jump stilling basin.[1] In order to avoid the deep excavation necessary for the hydraulic jump basin, a different type of energy dissipator was selected. The floor was set at elevation 8778 (2677.3 m), which is the same elevation as used for the outlet works stilling basin. By using a shallower basin, there was less danger of precipitating slides from either abutment. A conduit bend having a 165-foot (50.4-m) radius and a deflection angle of 17-1/2° was used to connect the existing undamaged conduit and the shallow basin. Hydraulic model studies were initiated to develop a satisfactory energy dissipating stilling basin under limited tailwater conditions and with unsymmetrical approach flow resulting from the circular curve in the upstream conduit.

The Model

To conserve time, some readily available 11.5-inch (292-mm) inside-diameter, clear plastic tubing was selected to represent the 16.5-foot (5.03-m) diameter prototype conduit resulting in a model scale ratio of 1:17.22.

The model included a 5-foot (1.52-m) length of circular conduit approaching the conduit bend, the bend, the circular-to-horseshoe transition, the open-channel chute, the stilling basin, and a section of the excavated channel downstream from the stilling basin. The correct flow depth and velocity in the circular conduit were obtained by regulating the flow with a slide gate at the upstream end of the circular conduit.

The Investigation

Conduit Bend

The theoretical flow velocity at the start of the vertical curve is expected to be about 74 fps (22.5 m/sec), 77 fps (23.46 m/sec), and 80 fps (24.38 m/sec) for the three test discharges of 1,650 cfs (46.75 cu m/sec), 3,140 cfs (89.0 cu m/sec), and 6,280 cfs (177.8 cu m/sec), respectively. 1,650 cfs is the discharge resulting from routing the computed 100-year flood through the reservoir, spillway, and outlet works. 6,280 cfs is the discharge resulting from routing the computed inflow design flood.

For the inflow design flood, the flow climbed the outside of the conduit bend starting a short distance downstream from the P.C., crossed over the top of the conduit in the transition, and seemed to completely fill the conduit at the portal, Figure 5. The flow appearance was similar for discharges of 1,650 cfs (46.75 cu m/sec) and 3,140 cfs (89.0 cu m/sec) but did not cross over the top.

Several deflectors were tried to prevent the flow from crossing over the top of the conduit. The first trial was a deflector normal to the side of the conduit along the spring line. The deflector extended from about the midpoint of the bend downstream to a point about 10 feet (3.05 m) beyond the end of the bend. This deflector did not intercept a sufficient amount of the flow, so it was lengthened about 5 feet (1.52 m) in the upstream direction. The deflector still was ineffective, and a further increase in length would result in an impractical structure from the construction viewpoint.

A narrow wall suspended from the conduit crown was next installed. The initial deflector wall was 1 foot (0.3 m) wide, 6 feet (1.83 m) high, and extended

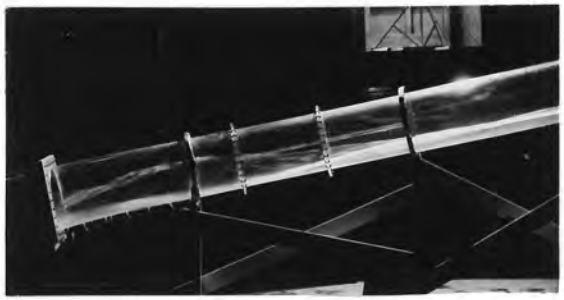

P860-D-65948

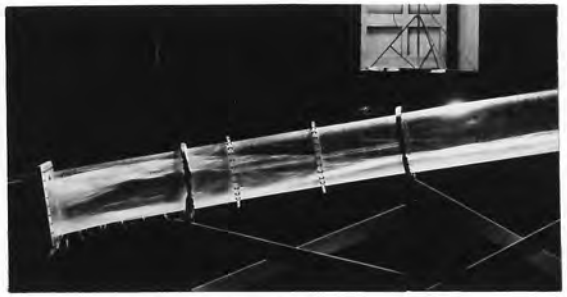

P860-D-65949

P860-D-65950

Discharge = 1650 cfs
Photo P860-D-65951

Discharge = 3140 cfs
Photo P860-D-65952

Discharge = 6280 cfs
Photo P860-D-65953

SILVER JACK DAM
Hydraulic Model Studies
1:17.25 Scale Model
Flow in Conduit, Chute
and Stilling Basin—Preliminary Design

Figure 5

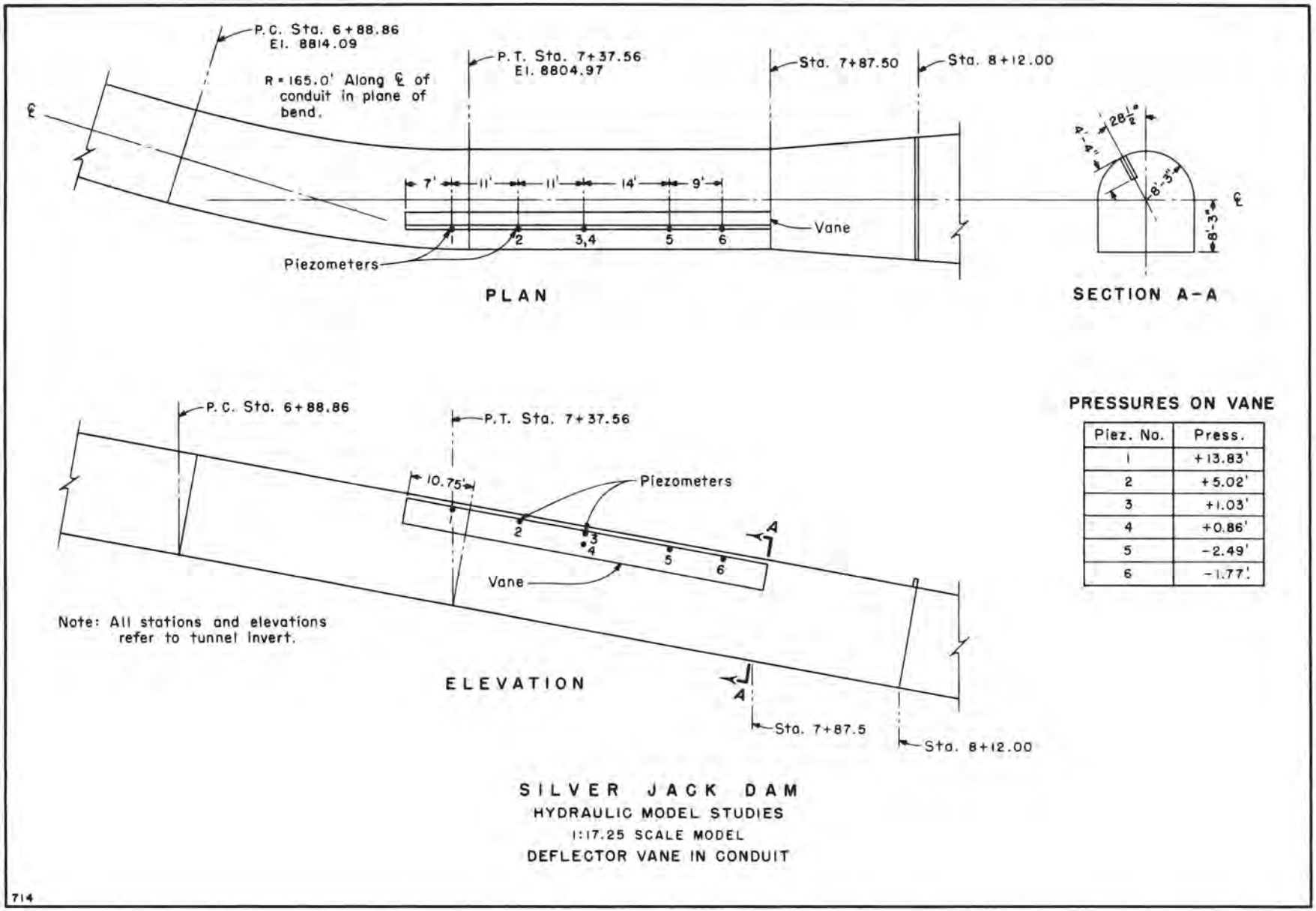
P.C. Sta. 6+88.86
El. 8814.09
R = 165.0' Along ℄ of conduit in plane of bend.
P.T. Sta. 7+37.56
El. 8804.97
Sta. 7+87.50
Sta. 8+12.00
℄
7'
11'
11'
14'
9'
1
2
3,4
5
6
Vane
Piezometers
PLAN
28½°
4'-4"
8'-3"
8'-3"
℄
SECTION A-A
P.C. Sta. 6+88.86
P.T. Sta. 7+37.56
10.75'
Piezometers
1
2
3
4
5
6
A
Vane
Note: All stations and elevations refer to tunnel invert.
ELEVATION
A
Sta. 7+87.5
Sta. 8+12.00
PRESSURES ON VANE
Piez. No. | Press.
1 | +13.83'
2 | +5.02'
3 | +1.03'
4 | +0.86'
5 | -2.49'
6 | -1.77'
SILVER JACK DAM
HYDRAULIC MODEL STUDIES
1:17.25 SCALE MODEL
DEFLECTOR VANE IN CONDUIT
714

Figure 6

from the P.T. of the bend downstream to the end of the transition. The wall prevented the flow from crossing over the crown of the conduit. However, it deflected the flow vertically downward into the part of the flow moving along the conduit invert, and the merging of the two high velocity flows resulted in an excessive amount of splashing and spray downstream from the conduit portal.

To prevent the direct impingement of the deflected flows, the wall was moved to the right of the crown. Three trials were made with the wall off center 15°, 28-1/2°, and 45° from vertical. All of the off-center locations reduced the splash and spray, but the 28-1/2° location, Figure 6, caused the least disturbance and also improved the flow distribution at the tunnel portal.

Moving the deflector to the off-center position also required that it be extended upstream 7.5 feet (2.29 m) into the curved portion of the conduit to intercept all of the flow crossing over the top of the tunnel. Tests were made to determine the minimum slant height for the deflector wall. These tests showed that the slant height could be reduced to 4 feet (1.22 m) without reducing the wall's effectiveness.

Six piezometers were placed along the right side of the deflector wall near the roof. Pressure measurements at the maximum discharge indicated that at the upstream end where the wall intercepted most of the flow, the pressure would be equivalent to about 14 feet (4.27 m) of water, Figure 6. All of the other piezometers indicated pressures near atmospheric.

One piezometer was placed on the outside wall of the bend near the spring line about 20 feet (6.1 m) upstream from the P.T. of the bend. This piezometer was used to determine if excessive pressures due to the centrifugal force of the

water should be considered in the structural design of the bend. Pressure measurements showed that the pressures in this area were about hydrostatic at all discharges. At 1,650 cfs (46.75 cu m/sec) the pressure was atmospheric, at 3,140 cfs (89.0 cu m/sec) the pressure was about 1 foot (0.3 m) of water above atmospheric, and at 6,280 cfs (177.8 cu m/sec) the pressure was about 8 feet (2.44 m) of water above atmospheric.

Open Channel Chute

Flow entering the diverging chute leading to the stilling basin was very unsymmetrical, and the unequal distribution carried into the stilling basin. In the preliminary design, the flow was concentrated on the left side of the basin with the 1,650 cfs (46.75 cu m/sec) and 6,280 cfs (177.8 cu m/sec) discharges, but with the 3,140 cfs (89.0 cu m/sec) discharge, the flow was more concentrated on the right side, Figure 7. Longitudinal guide vanes dividing the chute in thirds were developed to provide symmetrical distribution of the flow entering the stilling basin. Both vanes are 2 feet (0.61 m) wide and extend between Station 7+99.50 (2+43.8 m) and Station 8+50.00 (2+59.2 m). The height of each vane and the configuration at the upstream end were developed by cut and fit until the optimum distribution of the flow entering the stilling basin and the minimum amount of disturbance near the upstream end of the vane were obtained for all three test discharges. The configurations of the vanes are shown on Figure 8, and the flow appearance in the basin is shown on Figure 9.

Piezometers were installed in the floor on both sides of each vane, and two air vents were placed on the left side of each vane. The location of the piezometers and air vents is shown on Figure 10. The general direction of the flow in the chute was diagonally from right wall to left wall. The piezometers on

Discharge = 1650 cfs
T. W. Elev. = 8792.6
Photo P860-D-65954

Discharge = 3140 cfs
T. W. Elev. = 8793.8
Photo P860-D-65955

Discharge = 6280 cfs
T. W. Elev. = 8795.3
Photo P860-D-65956

SILVER JACK DAM
Hydraulic Model Studies
1:17.25 Scale Model
Stilling Basin Performance
Preliminary Design

Figure 7

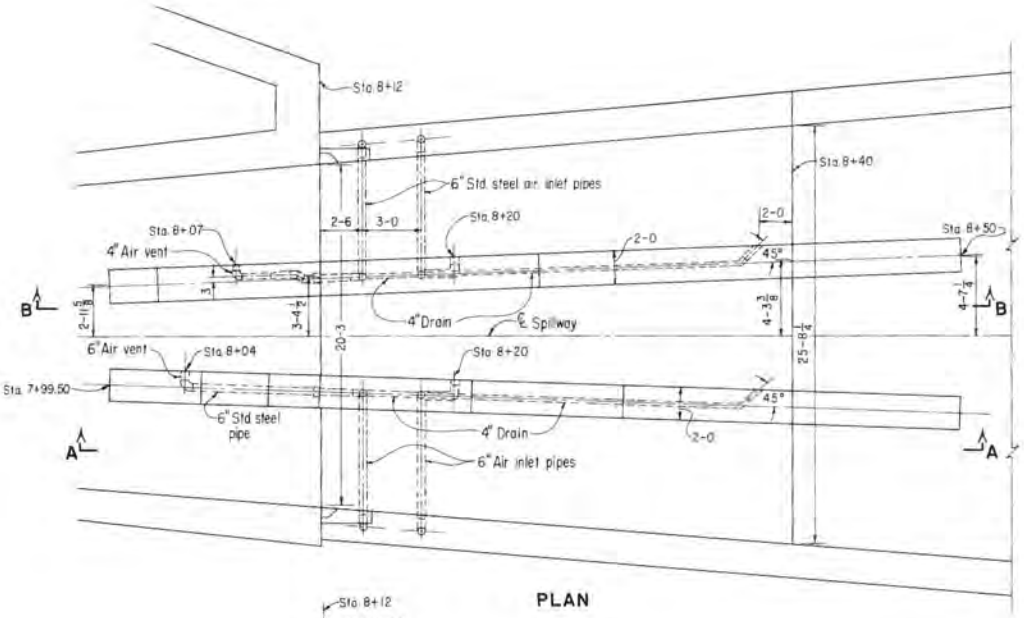

PLAN

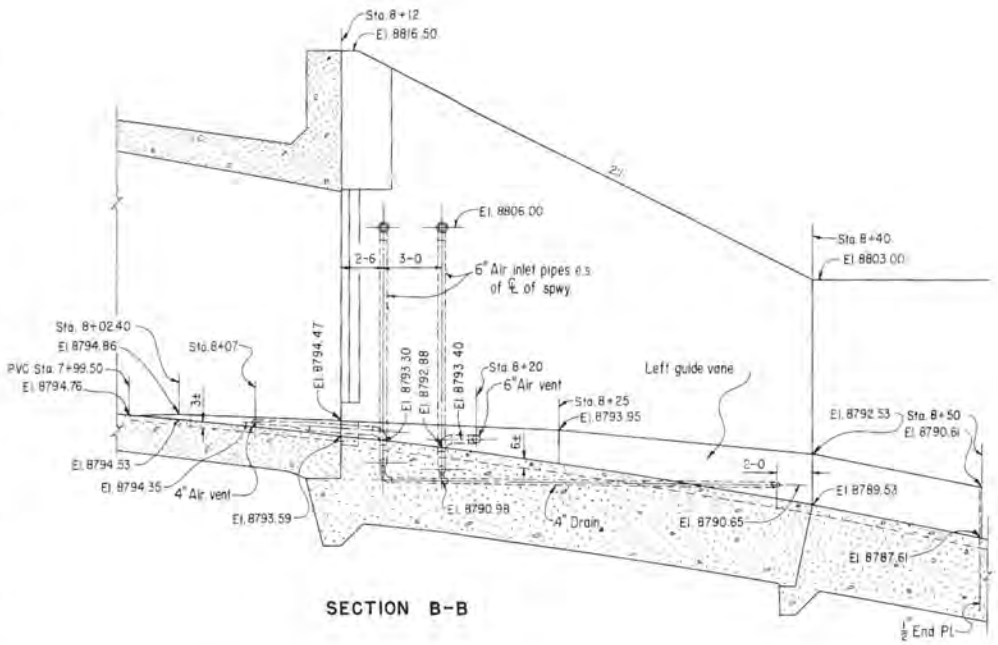

SECTION B-B

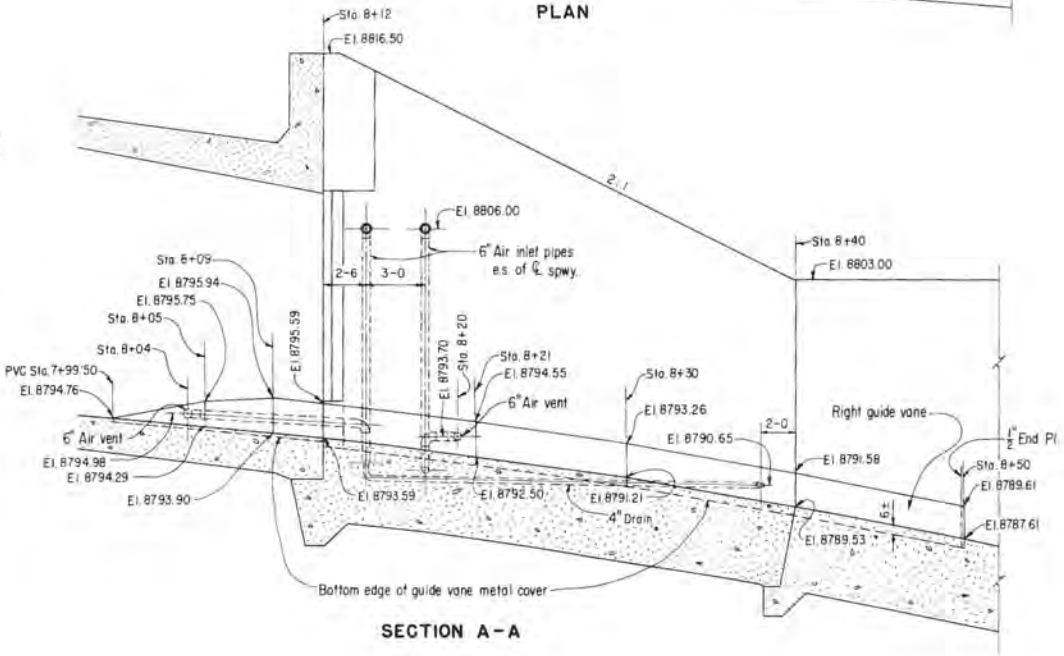

SECTION A-A

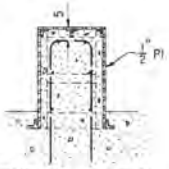

TYPICAL SECTION THRU GUIDE VANES

SILVER JACK DAM

SPILLWAY

CHUTE GUIDE VANES

FIGURE 8

Photo P860-D-65957

Discharge = 1650 cfs
T. W. Elev. = 8792.6
Photo P860-D-65960

Photo P860-D-65958

Discharge = 3140 cfs
T. W. Elev. = 8793.8
Photo 860-D-65961

Photo P860-D-65959

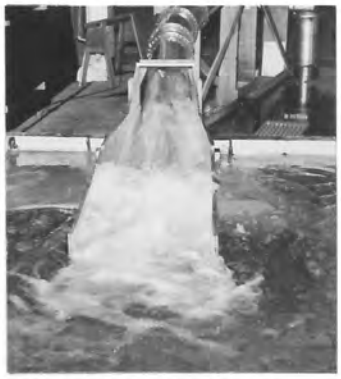

Discharge = 6280 cfs
T. W. Elev. = 8795.3
Photo P860-D-65962

SILVER JACK DAM
Hydraulic Model Studies
1:17.25 Scale Model
Stilling Basin Performance
Recommended Vanes in Conduit and Chute-Preliminary
Baffle Block Arrangement

Figure 9

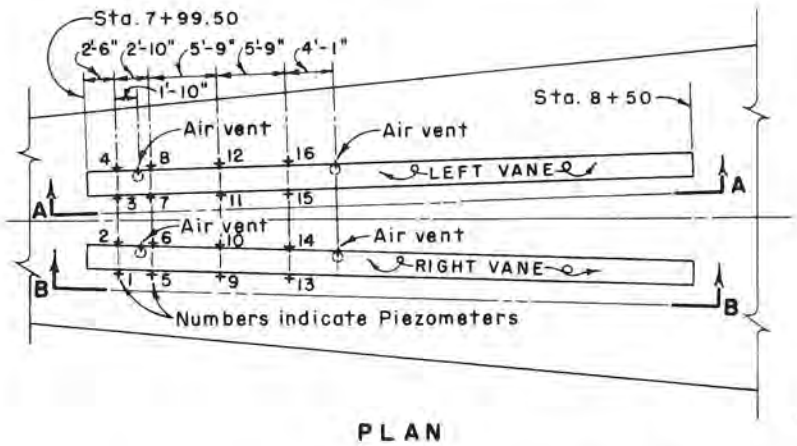

PLAN

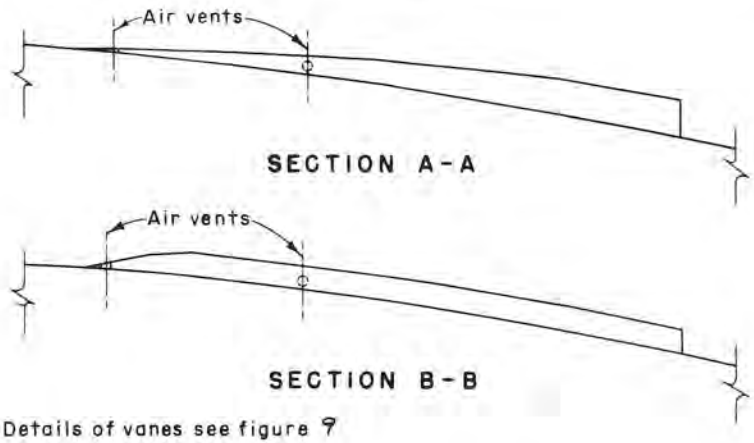

For Details of vanes see figure 9

PRESSURES AT PIEZOMETERS AND AIR VENTS

Q = 6280 cfs					Q = 3140 cfs					Q = 1650 cfs				
PIEZ. NO.	VENTS CLOSED	U.S. VENTS OPEN	D.S. VENTS OPEN	ALL VENTS OPEN	PIEZ. NO.	VENTS CLOSED	U.S. VENTS OPEN	D.S. VENTS OPEN	ALL VENTS OPEN	PIEZ. NO.	VENTS CLOSED	U.S. VENTS OPEN	D.S. VENTS OPEN	ALL VENTS OPEN
1	+11.8	+10.9	+11.2	+10.8	1	+7.3	+7.5	+7.8	+7.3	1	+6.8	+6.8	−6.0	+6.5
2	−10.8	−8.5	−10.7	−5.7	2	−2.3	−2.3	−2.4	−2.2	2	−0.3	−0.3	−0.3	−0.3
3	−0.9	+1.5	−0.8	+2.2	3	+3.4	+3.6	+3.6	+3.6	3	+5.9	+5.9	+6.0	+5.7
4	−7.2	−7.0	−7.3	−7.2	4	−0.5	−0.5	−0.6	−0.5	4	−4.1	−3.8	−4.0	−3.9
5	+1.2	+0.2	+1.4	+0.5	5	−1.2	−1.2	−1.5	−0.6	5	−4.0	−4.0	−4.0	−4.0
6	−2.8	−7.5	−2.8	−4.2	6	−1.9	−1.6	−1.4	−1.5	6	0	0	0	0
7	+0.6	+1.6	−0.7	+2.9	7	+3.9	+4.2	+4.0	+4.2	7	+5.9	+6.1	+4.8	+5.9
8	−2.9	−2.9	−2.9	−2.9	8	0	0	0	0	8	−1.9	−1.9	−2.0	−2.0
9	+8.7	+8.5	+8.7	+8.4	9	+7.2	+8.0	+7.6	+8.2	9	+2.4	+2.5	+2.5	+2.5
10	+1.7	−7.8	+1.8	−3.4	10	−1.0	−0.8	−0.9	−0.8	10	+0.2	+0.2	−0.2	+0 3
11	+4.2	+3.5	+3.9	+3.0	11	−3.4	+3.6	+3.4	+3.6	11	+2.1	+2.0	+2.0	+1.9
12	−1.1	−1.4	−1.2	−1.4	12	0	0	0	0	12	−1.6	−1.7	−1.6	−1.7
13	+3.5	+3.5	+3.5	+3.3	13	+3.9	+4.0	+3.9	+4.0	13	−1.8	−1.6	−1.8	−1.8
14	−2.0	—	−2.0	−3.3	14	−0.3	−0.3	−0.2	−0.3	14	0	0	0	0
15	+2.0	+3.7	+2.3	+1.1	15	0	0	0	0	15	−1.9	−1.9	−1.9	−1.9
16	−4.8	−4.8	−4.9	−4.9	16	−0.6	−0.6	−0.5	−0.5	16	−2.3	−2.2	−2.3	−2.0
	AIR VENTS					AIR VENTS					AIR VENTS			
U.S.RT.	−28.7	—	−10.0		U.S.RT.	−1.4	—	−0.7		U.S.RT.	−0.7	—	−0.7	
U.S.LT.	−5.8	—	−5.8		U.S.LT.	0	—	0		U.S.LT.	−1.4	—	−1.4	
D.S.RT.	+3.2	+2.9	—		D.S.RT.	0	0	—		D.S.RT.	0	0	—	
D.S.LT.	−4.3	−2.2	—		D.S.LT.	0	0	—		D.S.LT.	−5.7	0	—	

SILVER JACK DAM

HYDRAULIC MODEL STUDIES

1:17.25 SCALE MODEL

PRESSURES AT CHUTE DEFLECTOR VANES

714

Figure 10

the right side of the vanes were to determine the magnitude of the impact forces; the piezometers on the left side of the vanes were to detect any potential subatmospheric pressure areas and to determine the pressure differential across each vane. The air vents were to determine if air was demanded on the lee side of the vanes and, if so, the effect that supplying air would have on the pressures.

The lowest pressure occurred on the left side at the upstream end of the right vane, Figure 10. The pressure, equivalent to about 11 feet (3.35 m) of water below atmospheric, was measured at the maximum discharge. The lowest pressure at the left vane was about 8 feet (2.44 m) of water below atmospheric, also measured at the maximum discharge. The greatest pressure differential was measured at the upstream ends of the vanes during the maximum discharge. On the left vane, the differential was equivalent to about 19 feet (5.79 m) of water, and on the right vane, the differential was about 22 feet (6.71 m) of water.

The upstream air vents supplied air at all discharges. However, occasionally the downstream vents would fill with water, and once filled they would not voluntarily empty and start drawing air again. There was no significant difference in the piezometer readings with the air vents open or closed.

The air vents were connected to water manometers to determine the pressure on the side of the vanes. At the maximum discharge, the upstream vent on the lee side of the right vane indicated a pressure equivalent to vapor pressure when both vents were closed; when the downstream vent was opened, the pressure at the upstream vent was about 10 feet (3.05 m) of water below atmospheric. The downstream vent in the left vane indicated a pressure of about 4 feet (1.22 m)

of water below atmospheric when no air was supplied; when air was supplied through the upstream vent, the pressure at the downstream vent was about 2 feet (0.61 m) of water below atmospheric. The results of the pressure measurements have been tabulated on Figure 10.

Based on these studies, it was decided that air vents be provided on the left side of both vanes and that the vanes be steelclad.

Stilling Basin

The theoretical flow velocity and depth at the toe of the chute are 90 fps (27.43 m/sec) and 1.99 fps (0.61 m/sec), respectively. These values assume uniform flow distribution on the chute and a Manning's roughness coefficient n = 0.008. Ideally, for these entrance conditions, a Type II [1] stilling basin should be 128 feet (39 m) long with a tailwater depth of 29.5 feet (8.99 m), and a Type III stilling basin should be 70 feet (21.32 m) long with a tailwater depth of 25 feet (7.63 m). Due to the landslide on the right side and the space limitations caused by the proximity of the outlet works stilling basin and discharge channel, the basin length was restricted to 84.50 feet (25.75 mm) and to a tailwater depth of only 19 feet (5.29 m).

To compensate for the inadequate tailwater depth, large baffle blocks with concave upstream faces were installed in the basin. These blocks were patterned after blocks that had been used successfully in another structure where sufficient tailwater depth was not available.[2]

In the initial arrangement, two rows of blocks were installed. The first row contained three 3-foot (0.91-m) wide and two 2-foot (0.61-m) wide blocks with their upstream faces about 10 feet (3.05 m) downstream from the toe of the

slope. The second row contained four 3-foot (0.91-m) wide blocks 14 feet (4.27 m) downstream from the first row. All blocks were 7 feet (2.13 m) high.

This arrangement provided unsatisfactory stilling action in the basin. The lack of energy dissipation was evident whether or not the deflector vanes were installed on the approach chute, Figures 7 and 9. A similar block arrangement was tried with 5-foot (1.52 m) high blocks in both rows and with 5-foot (1.52 m) high blocks in the first row and 7-foot (2.13 m) high blocks in the second row. There was very little improvement in the energy dissipation with any of these symmetrical arrangements of blocks.

The flow entering the basin was not truly symmetrical, and the flow concentration changed from the left side to the right side and then back to the left side as the discharge increased. These flow conditions indicated that an unsymmetrical block arrangement might be necessary to obtain adequate energy dissipation. On this premise, the tests were continued on a "trial and error" basis to develop an effective block arrangement. The location of the rows and the spacing and location of individual blocks were adjusted and changed many times in arriving at the final arrangement with three rows of blocks as shown in Figure 11. The flow appearance with the final arrangement for the stilling basin is shown on Figure 12. The excellent flow conditions were prevalent for all discharges, and the tailwater could be lowered about 3 feet (0.92 m), at which point the model channel became the control without adversely affecting the basin efficiency.

Eleven piezometers were installed in critical locations in one block to determine if dangerous subatmospheric pressures or exceptionally high impact pressures could be detected, Figure 13. Pressures were measured with the block in

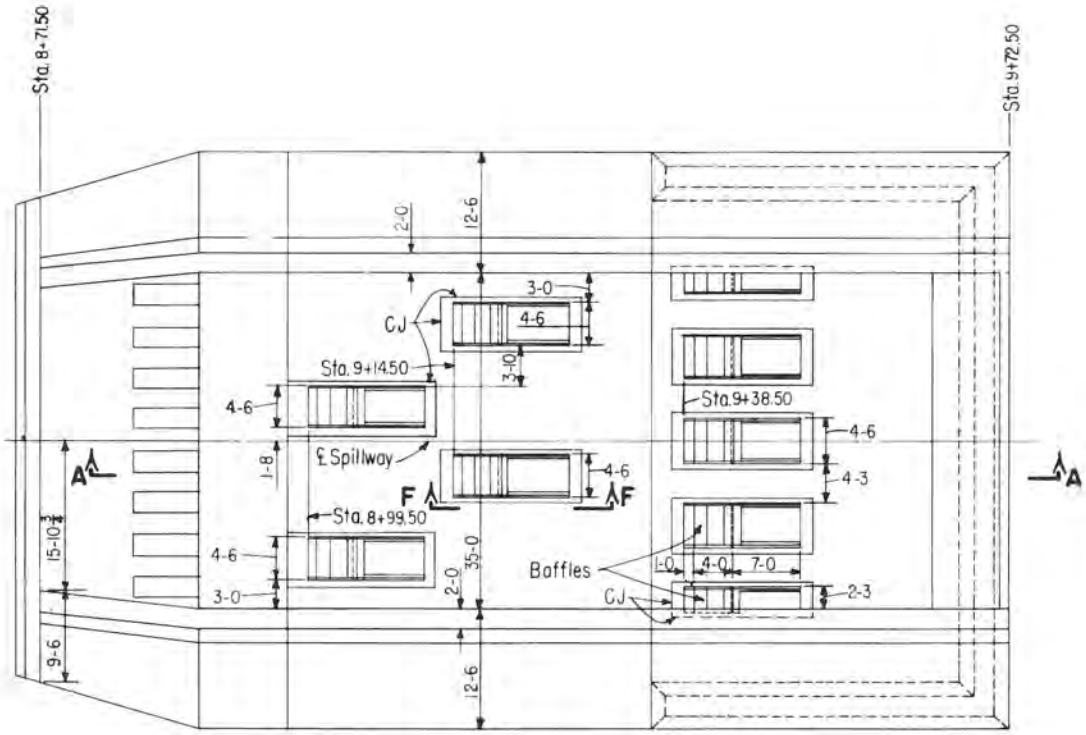

PLAN

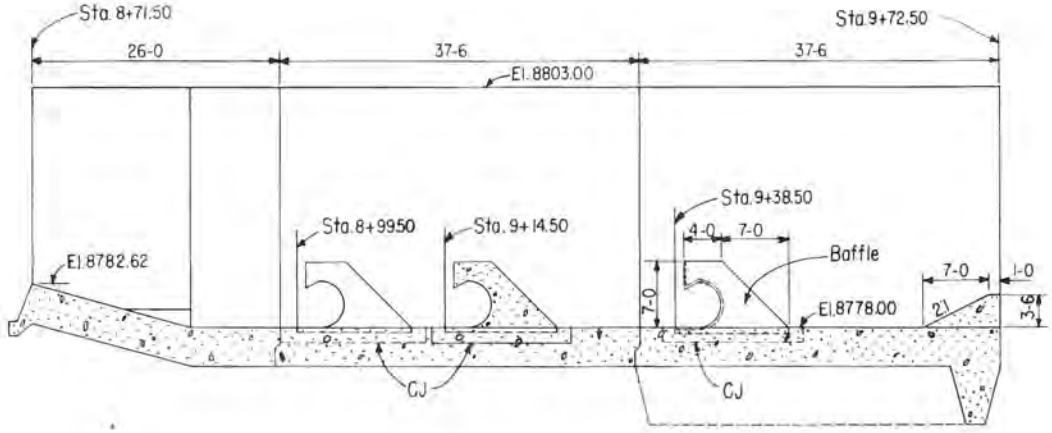

SECTION A-A

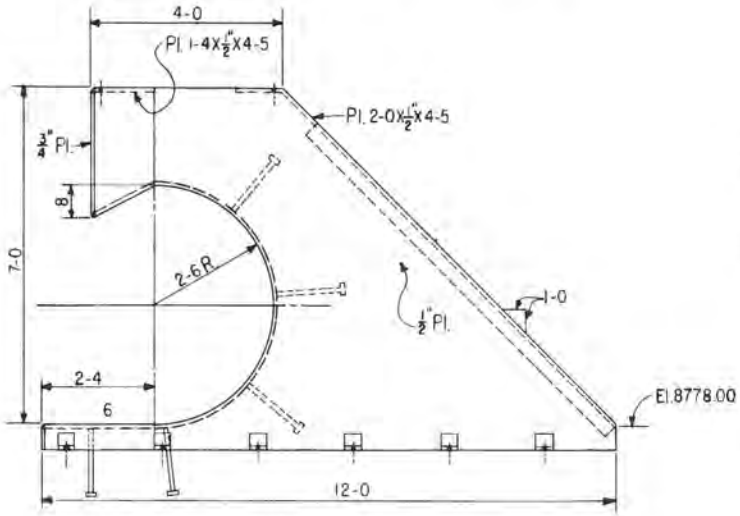

ELEVATION F-F

SILVER JACK DAM

SPILLWAY

STILLING BASIN-BAFFLES

FIGURE 11

Photo P860-D-65963

Discharge = 1650 cfs
T. W. Elev. = 8792.6
Photo P860-D-65966

Photo P860-D-65964

Discharge = 3140 cfs
T. W. Elev. = 8793.8
Photo P860-D-65967

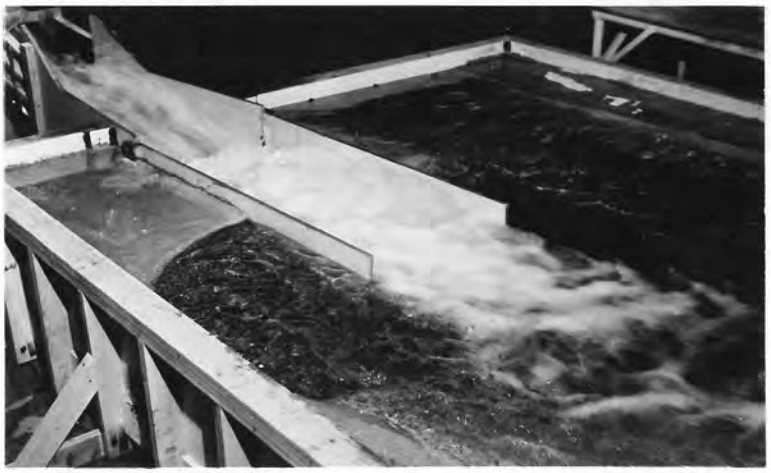

Photo P860-D-65965

Discharge = 6280 cfs
T. W. Elev. = 8795.6
Photo P860-D-65968

SILVER JACK DAM
Hydraulic Model Studies
1:17.25 Scale Model
Stilling Basin Performance
Recommended Design

Figure 12

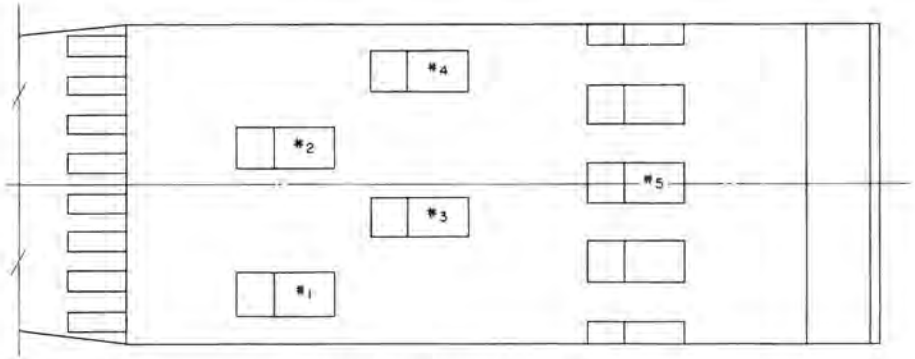

BAFFLE BLOCK LOCATIONS

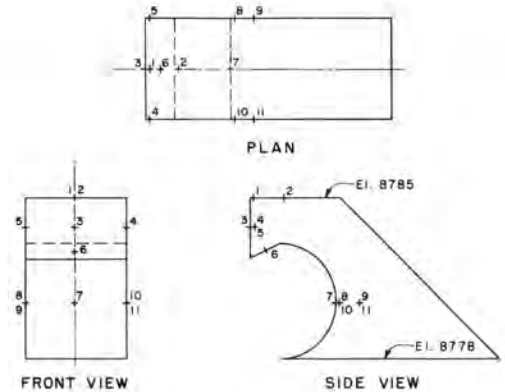

PIEZOMETER LOCATIONS

PRESSURES

BAFFLE #1

PIEZ. #	Q = 1650cfs	Q = 3140cfs	Q = 6280cfs
1	7.6'	4.7'	4.4'
2	7.6'	4.3'	4.0'
3	13.0'	12.5'	10.2'
4	8.3'	0.6'	-3.2'
5	7.5'	0.3'	-2.9'
6	11.4'	18.3'	28.5'
7	18.4'	50.0'	71.7'
8	10.0'	3.3'	1.6'
9	10.4'	4.4'	1.9'
10	11.5'	-2.8'	-6.3'
11	10.6'	-4.4'	-8.5'

BAFFLE #4

PIEZ. #	Q = 1650cfs	Q = 3140cfs	Q = 6280cfs
1	5.9'	8.4'	-5.3'
2	5.4'	8.5'	-5.6'
3	10.9'	12.6'	38.7'
4	5.2'	8.2'	-19.1'
5	7.1'	7.4'	-19.4'
6	10.7'	12.8'	34.5'
7	25.1'	21.1'	70.3'
8	0.7'	10.0'	-13.5'
9	4.1'	10.1'	-13.0'
10	11.0'	10.8'	-0.9'
11	11.0'	10.9'	-3.8'

BAFFLE #2

PIEZ. #	Q = 1650cfs	Q = 3140cfs	Q = 6280cfs
1	6.6'	6.6'	3.5'
2	6.7'	6.0'	3.1'
3	7.8'	10.4'	7.6'
4	8.0'	4.6'	1.7'
5	7.8'	4.8'	2.8'
6	9.0'	10.0'	13.9'
7	11.3'	43.2'	75.1'
8	10.9'	3.0'	-7.3'
9	11.0'	3.8'	-7.4'
10	10.9'	0.8'	-1.0'
11	11.3'	-0.9'	-2.7'

BAFFLE #5

PIEZ. #	Q = 1650cfs	Q = 3140cfs	Q = 6280cfs
1	8.3'	9.4'	9.6'
2	7.1'	8.3'	8.1'
3	10.1'	11.1'	11.7'
4	10.1'	11.1'	11.6'
5	9.8'	10.5'	11.3'
6	11.0'	12.2'	12.8'
7	13.3'	14.3'	17.3'
8	13.1'	13.6'	13.4'
9	13.0'	13.6'	13.6'
10	12.9'	14.0'	15.1'
11	13.0'	14.2'	14.9'

BAFFLE #3

PIEZ. #	Q = 1650cfs	Q = 3140cfs	Q = 6280cfs
1	7.4'	5.4'	6.4'
2	7.1'	3.0'	3.4'
3	7.5'	20.7'	31.8'
4	8.8'	0.4'	2.5'
5	8.6'	0.7'	2.2'
6	10.0'	14.6'	19.9'
7	12.2'	36.2'	56.0'
8	12.0'	8.1'	7.5'
9	12.0'	7.9'	7.4'
10	11.0'	9.3'	9.8'
11	11.6'	9.4'	9.9'

NOTES

Q = 1650 cfs T.W. El. = 8792.6
Q = 3140 cfs T.W. El. = 8793.8
Q = 6280 cfs T.W. El. = 8795.3
For details of baffles see Fig. 11

SILVER JACK DAM
HYDRAULIC MODEL STUDIES
1 : 17.25 SCALE MODEL
PRESSURES ON BAFFLE BLOCKS

714

Figure 13

each of the four positions in the first two rows and in the centerline position of the third row.

The highest pressure was measured with the block in the two first row positions and the left second row position. These pressures, located in the center of the concave face, were equivalent to 70 to 75 feet (21.3 to 22.8 m) of water. The lowest observed pressure was equivalent to about 19 feet (5.79 m) of water below atmospheric. The low pressures occurred on the sides of the block near the top with the block in the left second row position. The pressure readings have been tabulated on Figure 13.

Dynamic pressure readings were not taken; however, due to the turbulence of the hydraulic jump and the low pressures that were measured with water manometers, it was decided to protect the blocks with steel plates.

The basin was redesigned and constructed as indicated by the model studies, Figure 14. Also, an extra 3 inches (76 mm) of cover for reinforcing were provided on inside surfaces of the walls and floor to allow for some abrasion.

In order to improve the stability of the mass of landslide material and to forestall future slides, a plan was developed for buttressing the toe of the slide mass by adding the weight of a gravel and cobble fill and by installing horizontal drains extending into undisturbed glacial material in the right canyon wall. The plan also included drainage of surface areas of the slide and subsurface drainage from major depressions.

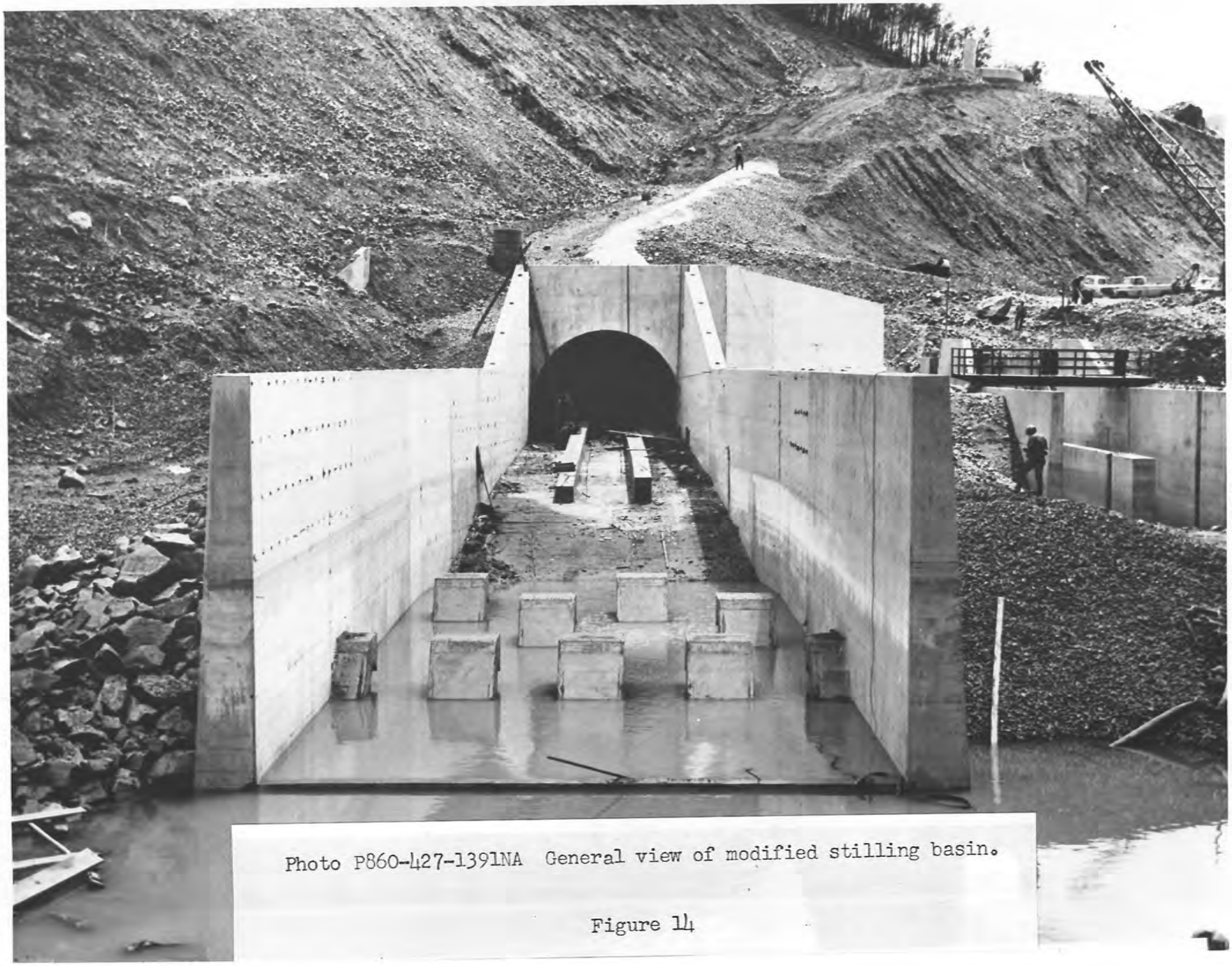

Photo P860-427-1391NA General view of modified stilling basin.

Figure 14

Summary

A landslide of major proportions occurred during conson of Silver Jack Dam. This slide required relocation and redesign of illway conduit and basin. Hydraulic model studies were required to devesatisfactory stilling basin. This redesign was accomplished without a interruption in the work on the project.

References

[1] Peterka, A. J., "Hydraulic Design of Stilling Bad Energy Dissipators," Engineering Monograph No. 25, Ueau of Reclamation, 1964

[2] Beichley, G. L., USBR Report No. Hyd-394, "Hydrodel Studies of the Outlet Works at Carter Lake Reservoir I 1 Joining the St. Vrain Canal," January 12, 1955

PAP 287

movement, it would not have been detected with the existing instrumentation. The existing, nearly vertical foundation drains were very effective in reducing pressures under the structure, but the hydrostatic pressures at the upstream face of the structure and in the foundation upstream of the structure were essentially the same as the reservoir pressure.

In reevaluating the piezometer data it was found that nearly full reservoir head existed at the upstream face of the spillway. It was also apparent that although the many minor faults in the chalk foundation were known to the original designers they were not assumed to be as critical as modern rock mechanics would indicate.

Since many of these minor faults exist at critical locations and at angles of dip that were adverse to the structure's stability, minimum strengths were assigned in the reevaluation analysis to these faults. Using these strengths along with the high hydrostatic pressures acting on the structure in a simple two-dimensional analysis resulted in a safety factor of well below unity for several design cases.

The studies clearly indicate that the uplift assumptions on bentonite seams beneath the structure, including the stilling basin, have very little effect on the structure's stability, due to the low friction ($\tan \phi = 0.15$) of the bentonite. Uplift assumptions on the passive wedge, however, have a much larger effect because of the higher friction value assumed for the presheared chalk surfaces. All analyses assumed a horizontal driving force at the upstream face of the structure equal to full hydrostatic based on full pool.

Newly installed piezometers substantiated the existence of nearly full reservoir pressure against the upstream face of the structure. They also indicated that the nearly vertical existing drains under the structure were almost 100% effective in controlling uplift. The upstream horizontal pilot drains effectively lowered the hydrostatic pressure both at the structure's face and in the chalk foundation. Changes in the piezometric pressures during the drilling for these devices indicated there is hydrostatic communication along the upstream face for distances of up to 300 ft (91 m) horizontally.

The downward flow of water from the reservoir is undoubtedly limited by the bentonite seams, which act as impervious membranes within the more permeable chalk. Reservoir siltation is also a contributor to retarding flow.

Eventually, the alternates were reduced to a comparison of a plan for installing additional foundation anchors in the stilling basin area as opposed to an upstream drainage plan consisting of 200-ft (61-m) long, nearly horizontal, 3 in. drains from the drainage gallery at 10-ft (3-m) spacings throughout the length of the spillway. The drainage plan was selected because the cost of the anchor plan was estimated to be $370,000, compared to $80,000 for the upstream drains.

The final drilling program at Harlan County Dam began in late February, 1969, and was completed in the middle of May, 1969. The drilling required specialized equipment and methods due to the space limitations of the 5 by 7-ft (1.5 x 2.1-m) gallery. The final operation was the drilling of 87 drain holes through the upstream wall of the gallery. In order to facilitate drainage across the entire structure as soon as possible, the drain holes were installed in stages. The first stage consisted of eight holes installed on 90 to 100-ft (27.4 to 30.5-m) centers. Each succeeding stage reduced the distance between holes until the final 10-ft (3-m) spacing was achieved.

With installation of the remedial horizontal drains, the hydrostatic levels at both the upstream face of the structure and in the chalk foundation have been substantially reduced. The reevaluation studies under full pool conditions based upon conservative foundation shear strengths and with the remedial drainage system functioning indicates satisfactory safety factors. ▽

Charles D. Craddock, Asst Chief, Construction Division, Kansas City District, Corps of Engineers, has had extensive experience in the design and construction of earth and concrete dams. He is a Registered Civil Engineer and is active in many professional associations.

Difficult dam problems—stilling basin redesign

Construction of the hydraulic structures at Silver Jack Dam, Colo., was well advanced in the spring of 1969 when a major earth movement occurred along the right abutment. The slide extended into the area occupied by the stilling basin causing severe damage to the structure.

G. W. CENTER
Mining Enforcement & Safety Admin.
Denver Technical Support Center
Denver, Colo.
T. J. RHONE, M. ASCE
Division of General Research
Bureau of Reclamation
Denver, Colo.

Silver Jack Dam is located on Cimarron Creek about 25 mi (40.25 km) southeast of Montrose, Colo. The earthfill dam has a height of 150 ft (45.7 m) above the creekbed, a length of 1,070 ft (326.2 m) at the crest, and a fill volume of 1,260,000 cu yd (963,500 m^3). The principal hydraulic features are a spillway and an outlet works located on the right abutment.

Glaciation is conspicuous in the general area of the damsite. The glacial deposits extend to about the 9,000-ft (3,015-m) contour on the sides of the old channel and to at least 100 ft (30.5 m) below the stream channel at the damsite area. The glacial till is from 200 to 800 ft (61 to 244 m) thick, well packed, and contains varying concentrations of rock fragments.

Silver Jack Dam was constructed across a rather narrow valley that had been eroded into the glacial till to a depth of 300 to 400 ft (91 to 122 m). A hole drilled in the valley floor at the dam axis to a depth of 117 ft (35.7 m) did not encounter bedrock. However, alluvial gravels were found to a depth of 30 ft (9.1 m).

Some old landslides were recognized on both abutments. However, these were thought to be superficial. Further investigation revealed that landslides had been extensive along the left abutment.

Because of the extent of old landslides along the left abutment, it was decided to locate the outlet works on

Melting snow saturated the slopes of the exposed cut in this area where the spillway cut crossed an old landslide. This 400-ft (120-m) wide slide destroyed the newly constructed stilling basin at Silver Jack Dam, Colo.

The shift in alignment of the stilling basin called for in the redesign created some additional engineering problems. The curve in the conduit created unsymmetrical approach flow. This was corrected mostly by installing guide vanes in the conduit. However, the large baffle blocks used to compensate for inadequate tailwater depth were staggered further correct the affects of uneven flow.

the right bank of Cimarron Creek where all of the structures would rest upon undisturbed glacial till.

To minimize the width of sidehill cut and to provide a barrel-type structure that could span possible soft areas of foundation, it was decided to use a conduit-type spillway with a morning glory inlet structure. An alignment for the spillway was selected to the right of the outlet works.

Construction conditions

From the commencement of work on the open cut excavation for the spillway and outlet works, the rainy weather and saturated condition of the glacial materials made construction very difficult. It became apparent that the 15% of the foundation materials passing the No. 200 sieve was not clay but a non-plastic material classed as rock flour.

This material, which had no cohesive properties, filled the voids to block the flow of water. As a result, the glacial till was very unstable when saturated. Surfaces excavated on a small incline would flow to fill any small depressions when subjected to a vibration as slight as foot traffic. Pockets of semifluid material would break and flow down cut slopes to relieve local internal hydrostatic pressure.

In the spring of 1968, an examination of the site revealed that the spillway cut had crossed the flank of an old landslide about 1,000 ft (300 m) in length and produced an unstable condition. The plans for the spillway were altered. The conduit was extended about 150 ft (46 m) farther downstream, the sidehill excavation was resloped to a 2:1 slope, a drainage system was provided along the exposed surface, and a 6-ft (1.8-m) layer of sand and gravel was placed on the sidehill cut slope. This layer was intended to hold fine glacial materials in place and collect any seepage.

During the night of April 22, 1969, a major earth movement occurred involving about 700,000 tons (635 Gg) of glacial material from about 9.5 acres (3.8 ha). The toe of the slide extended into the spillway stilling basin and outlet channel area.

After examination of the damage, it was decided to remove the cracked sections of the spillway conduit and to construct an elbow, a new chute, a new stilling basin, a retaining wall, and a new outlet channel to the left of the damaged portions of the spillway.

Model studies

Hydraulic model studies were initiated to develop a satisfactory energy dissipating stilling basin under limited tailwater conditions and with unsymmetrical approach flow resulting from the circular curve in the upstream spillway conduit.

For the inflow design flood of 6,280 cfs (177.8 m^3/s), the flow climbed the outside of the conduit bend starting a short distance downstream from the point of curvature, crossed over the top of the conduit in the transition, and seemed to completely fill the conduit at the portal. Several deflectors were tried to prevent the flow from crossing over the top of the conduit. A narrow wall suspended from the conduit crown at 28.5 degrees off center caused the least disturbance and also improved the flow distribution of the tunnel portal.

Flow entering the diverging chute leading to the stilling basin was very unsymmetrical, and the unequal distribution carried into the stilling basin. Longitudinal guide vanes, dividing the chute in thirds, were developed to provide symmetrical distribution of the flow entering the stilling basin. The vanes required air vents and steel cladding. Without the air vents, pres-

sures at high flows reached vaporization levels in the water.

To compensate for inadequate tailwater depth, large baffle blocks with concave upstream faces were installed in the basin. The flow entering the basin was not truly symmetrical, and the flow concentration changed from the left side to the right side and then back to the left side as the discharge increased. These flow conditions indicated that an unsymmetrical block arrangement might be necessary to obtain adequate energy dissipation.

On this premise, the tests were continued on a "trial and error" basis to develop an effective block arrangement. The location of the rows and the spacing and location of individual blocks were adjusted and changed many times in arriving at the final arrangement with three rows of blocks.

With the arrangement used, excellent flow conditions were prevalent for all discharges and the tailwater could be lowered about 3 ft (0.9 m) to a point where the model channel became the control without adversely affecting the basin efficiency. The basin was redesigned from the model.

In order to improve the stability of the mass of landslide material and to forestall future slides, a plan was developed for buttressing the toe of the slide mass by adding the weight of a gravel and cobble fill and by installing horizontal drains extending into undisturbed glacial material in the right canyon wall. The plan also included drainage of surface areas and subsurface drainage from major depressions.

A 1973 inspection of the site showed that the landslide material has been stabilized. Flows up to about 850 cfs (24 m^3/s) have passed through the spillway. Its operation compares satisfactorily with predictions from the model studies. ▽

Gustavus W. Center was employed by the U.S. Bureau of Reclamation for 29 years before transferring to the Mining Enforcement and Safety Administration in March 1975. He is a registered PE in Colorado.

Thomas J. Rhone has been with the Division of General Research of the Bureau of Reclamation for 29 years and is currently Head of the Applied Hydraulics Section. He is a registered PE in Colorado.

Difficult dam problems—cofferdam failure

Uniontown Locks and Dam on the Ohio River was under construction when the cofferdam failed. It failed during a rising river by upstream movement of seven cells, four of which moved in essentially an intact position by sliding from 37 to 72 ft (11.3 to 21.9 m).

HARRY E. THOMAS
Chief, Geology Section
Corps of Engineers
Louisville, Ky.

EUGENE J. MILLER, M. ASCE
Chief, Soils Design Section
Corps of Engineers
Louisville, Ky.

JOHN J. SPEAKER
Assistant Chief, Design Branch
Corps of Engineers
Louisville, Ky.

UNIONTOWN LOCKS AND DAM are located on the Ohio River approximately 14 mi (22.5 km) southwest of Mount Vernon, Ind. The locks were completed previously under a separate contract and are located on the Indiana side. Construction of the Uniontown Dam, Ohio River, was a $34,497,000 project accomplished by the Gust K. Newberg Construction Company under a contract administered by the Louisville District, Corps of Engineers. Construction was approximately 17% complete at the time of the accident.

The first stage of the cofferdam, which failed, was a ring cofferdam with inside dimensions of 170 by 755 ft (51.5 x 230.1 m), and with the Indiana arm approximately 500 ft (150 m) from the nearest lock wall face. The cofferdam consists of circular sheet pile cells approximately 65 ft (19.8 m) in diameter with connecting arcs, filled with previous river material and capped with concrete.

The failure

The cofferdam failed on Friday, February 26, 1971, at about 9:45 a.m. after being dewatered for ten days. Fifty-two people were working in and around the cofferdam, ten within the dewatered area. All workmen escaped without injury, many to adjacent floating barges where they were picked up by a government boat.

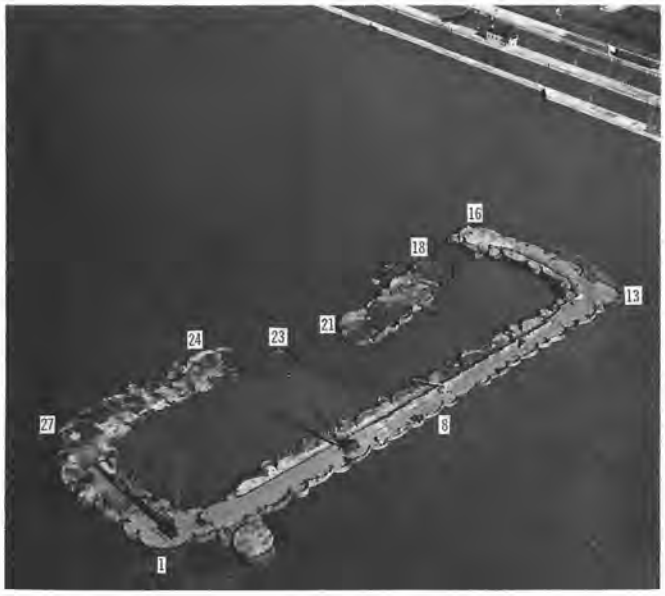

This aerial view shows the cofferdam failure at the Uniontown Locks and Dam as seen from the upstream Kentucky corner toward the downstream Indiana corner. Some of the numbered sheet pile cells are referred to in the article.

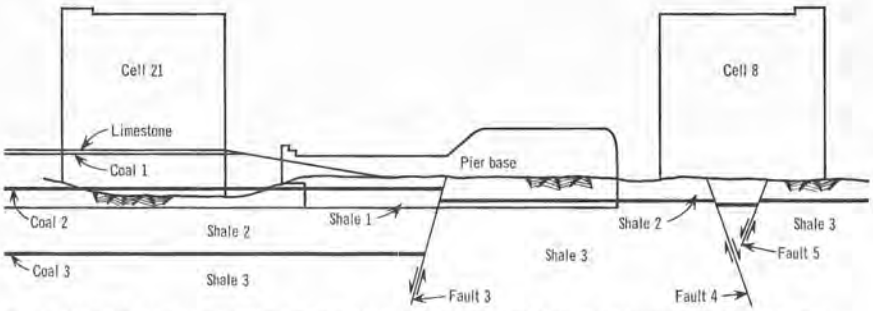

Fig. 1. A geologic section through pier 8 show the faulting and bedrock stratification that runs the length of the cofferdam.

Shortly before the cofferdam failed, two engineers for Gust K. Newberg had set grade stakes for a concrete cell cap on the upstream arm of the coffer. They went to the Kentucky end of the downstream arm to check for any movement of the cells on the downstream arm. The instrument man sighted on a fixed point on the Indiana bank and took a quick shot on the movement markers for each of the cells, noting that they were alright.

He then started to make another set of readings and when he sighted the movement marker of Cell 18, it apparently had moved about two in. (50 mm) upstream. Believing he may have bumped the instrument, he rechecked and noted the cell had moved even more upstream. Realizing something was wrong, they started waving and yelling to alert the men in the unwatered area within the cofferdam to get out, and gave the alarm on a radio.

At about the same time two Corps of Engineers inspectors arrived at Cell 22, observed a wide crack in the concrete cap on the cell, and noticed that another crack was beginning to form. They also started warning the men in the hole. As the alarm was spread, the contractor's crane operators, who were operating their equipment from the top of the cofferdam, began to blow the distress signal of repeated, short blasts on the equipment air horns.

While the men were evacuating the hole by the quickest means possible, Cells 17 through 23 were continuing their upstream movement into the unwatered area. A pressure ridge 10 to 15 ft (3.0 to 4.5 m) in height was observed by several witnesses to form in the rock near the longitudinal center of the unwatered area.

The stress and tension in the piling increased until Cell 22 failed in interlock or by parting of piling web, and some witnesses stated Cell 22 laid over and water started pouring into the hole. As the water continued to fill the hole, there was general failure with Cell 16 acting as a hinge and Cells 17 through 21 continuing to move inward. Next Cell 17 failed structurally allowing water in—the other four moving intact.

When Cell 22 failed the aggregate barge attached to the concrete mixing plant barge broke loose and was lost. The mixing plant and cement barges moved with the four upright cells and the 4000 barge, which was moored to Cell 16, rode out the break of Cell 17 without apparent damage. Approximately 20 men were picked up at the cement barge by the government boat before the hole was completely filled.

A number of the witnesses estimated the time between the first notice of cell movement and the complete filling of the hole as approximately five to six minutes. All were of the opinion that it was less than ten minutes.

Geology and foundation conditions

The project is located north of the head of the Mississippi Embayment where intense faulting has occurred. The Rough Creek fault complex, which strikes east and west, is located some eight miles south of the dam and the Wabash Valley fault system, which trends northeast, is located just downstream of the dam. The small normal faults observed during construction of the locks and first stage construction of the dam appear to branch from the larger fault systems. Fig. 1 shows the fault locations. Three of the faults, nos. 3, 4, and 5 were numbered to correspond to faults encountered in the locks and presented in the contract plans for the dam.

Bedrock is primarily shale with thin coal beds and associated underclay of the Lisman formation, Pennsylvanian series. Coal beds and shale units were numbered for ease in identification and do not refer to established stratigraphic coal beds in Kentucky or Indiana.

The failure occurred during a rising river just after the cofferdam had been dewatered. No information was available on uplift pressure in the affected formations before or at the time of failure. The failure was analyzed to determine the strength of the material at failure. Full uplift, height of the river, was assumed at the riverside (downstream) of the cell. Uplift pressures at the upstream extent of the moving mass was varied from 0 to 50% of the full river head. This analysis indicated the foundation to have a strength value of angle ϕ between 13.5 and 31.5 degrees depending upon uplift conditions assumed.

Movement occurred along coal and underclay 2. The overlying shale and limestone moved intact as a block until it encountered fault 3, which dips upstream with a displacement of 10 to 35 ft (3.0 to 10.6 m) and the more resistant shale 2 that served as a baffle block thus forcing the failure to follow fault 3 and daylight. The depth of failure corresponds with the elevation of coal 2 and sheared a maximum thickness of 16 ft (4.9 m) of rock.

The contractor elected to reconstruct the cofferdam in its original location after clean-up of the disturbed area. Based on new analyses, the cofferdam had a safety factor of one for a river stage of elevation 335 using low shear strength. It was decided to go with the cofferdam in the low water season, construct the piers to elevation 300, and use a concrete reblocking system between the piers and the cofferdam to provide a safe structure for the high water season. To insure safety, restrictions were put on the cofferdam until the concrete reblocking system was installed.

Design for the pier foundation was changed from open cut founded on shales 1, 2 and 3 to drilled in caissons founded in shale 3. It was decided to found piers 7 through 11 entirely on shale 3 some 30 ft (9.1 m) below top of rock. There were a total of 286 36-in. (910-mm) drilled-in caissons required for stage one construction. ∇

Harry E. Thomas came to work with the Louisville District, Corps of Engineers in 1958. Since 1966, he has served as Chief of the Geology Section with responsibility for all the geologic investigation and related analyses.

Following graduation in 1955 Eugene J. Miller was employed by the U.S. Army Engineer District, Louisville, Ky. He is a P.E. in the State of Indiana and a P.E. and R.L.S. in the Commonwealth of Kentucky.

After graduation in 1955 John J. Speaker worked for the consulting firm of Hazelet & Erdal and Reynolds Metals Co. In 1958, he started working with the Louisville District, Corps of Engineers.