UNITED STATES
DEPARTMENT OF THE INTERIOR
BUREAU OF RECLAMATION
OFFICE OF CHIEF ENGINEER

DESIGNING THE APPROACH CHANNEL FOR SHAFT SPILLWAYS

(O proektirovanii vyemok pri podkhode k shakhtomu vodoslivu)

By

A. R. Skue

Translated from the Russian: Trudy LPI, Ratzionalnie konstruktzii gidroturbinnykh blokov bysokovo napora i gidravlika burnyskh potokov, Moscow No. 274, pp 38-46, 1966

By

Danny L. King
Hydraulics Branch
Division of Research

Note: This is a working translation prepared for use within the Bureau of Reclamation

Office of Engineering Reference
Denver, Colorado
November 1967

ABSTRACT

The Vedeneev Hydraulics Institute in the USSR conducted model tests to perfect approach channels to morning-glory spillways under conditions of restriction due to proximity of earth dam slopes or rock outcroppings. A parabolic channel shape with an "obstructing" pier and dividing piers to alleviate vortex formation is recommended. The recommended design is compared with the results of previous work by means of a sample problem. Experiences encountered during laboratory model studies are described. (Translator)

DESCRIPTORS-- foreign design practices/ hydraulics/ hydraulic engineering/ *model studies/ calculations/ hydraulic models/ hydraulic structures-*spillways/ discharge coefficients/ pulsating flow/spillway crests/ vortices/ excavation/ volume/ flow control/ piers

IDENTIFIERS-- USSR/ *approach channels/ morning-glory spillway/ *shaft spillways

DESIGNING THE APPROACH CHANNEL FOR SHAFT SPILLWAYS

by A. R. Skue

One of the basic problems in connection with designing shaft spillways is to assure the required approach of the water to the morning-glory crest of the spillway; these conditions largely determine the discharge capacity, and consequently, also the effectiveness of operation of these spillways. The approach conditions are considered the very best when the approach is strictly radial to the morning-glory, with the discharge of the water entering the shaft equally distributed around the entire perimeter of the crest. When these conditions are not observed, there may appear within the morning-glory, as is known, a swirling motion of the water, in connection with which the discharge capacity of the spillway is decreased. To assure radial approach of the water to the morning-glory is not always possible.

In particular, this can prove to be difficult when there are shore slopes, the slope of the earth dam, and others near the morning-glory.

Nevertheless, it turns out that even in these circumstances, the use of a shaft spillway for many reasons is still more acceptable than the use of other types of spillways.

To assure satisfactory operation of the shaft spillway, even under these conditions (that is, for a confined approach of the water to the morning-glory) there should be built around it a special approach[1] channel in the ground, which should have certain dimensions and shape; sometimes even so-called "anti-vortex devices" (for example, piers on the crest of the morning-glory) are used.

It is necessary to say, that in recent articles that we know about which are devoted to shaft spillways, it is recommended that the approach channels mentioned above should be fairly large.

For example, P. P. Mois[2] (Reference 1) proposes to design the outlines of the approach channel as a parabola (Figure 1a), the equation of which in relation to the chord closing it perpendicularly to the axis of symmetry takes the form:

$$y = \frac{4x(\ell - x)f}{\ell^2} \qquad (1)$$

where ℓ is the length of the chord, and f is the distance from the apex of the parabola to the chord. To determine the optimum dimensions of the approach channel, P. P. Mois recommends the following relationships:

---

[1] Translator's note: Underlined phrases in the text represent the author's italics.

[2] Translator's note: All proper nouns in this text have been transliterated by the Library of Congress System.

$$\ell \sim (6.6 \text{ to } 7.0)D; \quad f = 2D;$$

$$\frac{p}{H_o} = 2.3 \text{ to } 2.5$$

where D is the diameter of the morning-glory on the level of its crest; p is the height of the crest above the approach floor, and H_o is the design head on the spillway crest.

The investigations of Mois show that when these dimensions are observed (and also for the condition $\frac{H_o}{R} = 0.26$[a]), the resulting ring-shaped spillway will have the largest coefficient of discharge, equal to 0.46.

However, an approach channel with the above dimensions may require (as evident from Figure 1,a) a comparatively large volume of earth or rock work. In addition, it may happen that such an approach generally is not included in the accepted components of the hydro-complex.[3] What has been shown above also relates to a significant degree to the proposal of N. I. Romaniko (Reference 2), recommending an approach channeling device around the morning-glory, the form of which in plan presents a combination of a trapezoid with a rectangle (Figure 1, b).

---

[a] Author's note: R is the radius of the morning-glory at the crest.

[3] Translator's note: This term is used in the USSR to indicate all the structures of a hydraulic installation located at one site, not any particular combination of structures.

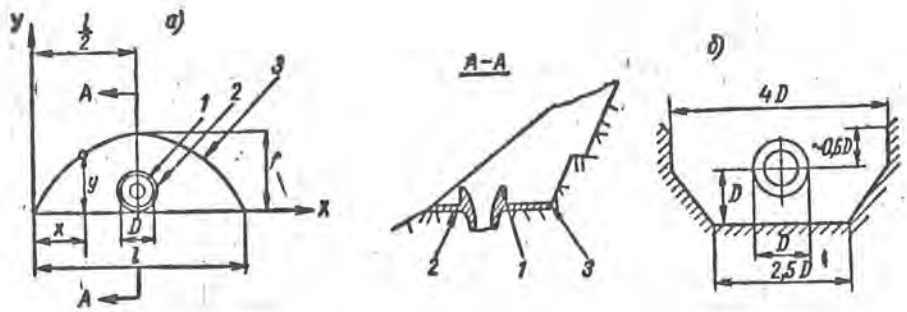

Figure 1. Design boundaries of the approach channel according to the proposals of P. P. Mois and N. I. Romaniko

a. The schematic for positioning the boundaries of the approach channel according to P. P. Mois

b. Design boundaries of the approach channel according to N. I. Romaniko

1. Crest of the morning-glory
2. Outside boundary of the sill of the morning-glory
3. Boundary of the approach channel

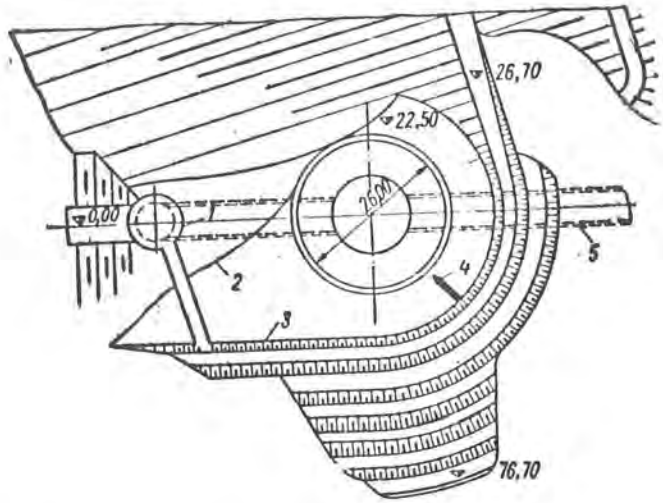

Figure 2. Plan of the section of the investigated hydrocomplex

1. Intake tower
2. The limit of hard rock
3. Initial outline of the entrance channel boundary
4. Dividing pier
5. Outlet tunnel

To build the approach channel to the dimensions recommended above is far from simple and is sometimes impossible.

If however, in spite of this, the use of the shaft spillway with some kind of dimensions nevertheless must be admitted essential (which occurs in hydraulic practice), the question arises about possible reduction in size of the approach channel and to what degree it affects the hydraulic flow regime within the limits of the spillway. As a result, the problem may also arise concerning the necessity of undertaking certain additional measures to improve the hydraulic flow pattern within the limits of a spillway with a reduced approach channel.

In 1961-1962 in the Hydraulic Laboratory of the Hydraulics Department of Leningrad Polytechnical Institute named for M. I. Kalinin, we investigated shaft spillways on 1:40 scale models, beginning to plan the layout of a certain hydrocomplex (under the scientific leadership of Dr. of Technical Sciences R. R. Chugaev).

A plan of the portion of the hydrocomplex being investigated is shown in Figure 2.

This figure shows the spillway located in such a way that it is compressed between the slopes of the steep rocky bank and the earth dam,

due to which the approach of the water to the morning-glory is restricted.

The shaft spillway, and in addition, several basic requirements upstream of the hydrocomplex, made it necessary to have the spillway structure automatically included in the construction work to pass floods associated with a significant rise of the reservoir water level above the normal pool level.[b] The spillway was planned to pass a design discharge of $Q = 393\ m^3/sec$ at a head H_o on the crest of the morning-glory of 2 m; the diameter of the morning-glory (D) was assumed to be 26 m.[c]

The ratio $\frac{p}{H_o}$ was equal to 0.5. The difference between the water levels in the headwater and tailwater of the spillway, that is its total head, was equal to 25 m (in the tailwater the shaft spillway is joined by the outlet tunnel).

---

[b] Author's note: The level of the morning-glory crest corresponds to the normal pool level.

[c] Author's note: As a result of the additional planning analyses, undertaken before the start of the investigations, the diameter of the morning-glory was increased to 28 m, which had been decided upon during the construction of the model. The spillway surface of the morning-glory was constructed on the coordinates R (abscissa) and y (ordinate), which were determined in the following manner. In a series of horizontal sections of the morning-glory with radii (abscissa) R, specific discharges of water were found according to the formula $q = \frac{Q_o}{2\pi R}$ and the critical depth h_k corresponding to them. The ordinate y in these sections, measured from the horizontal corresponding to the water level for Q_o, is found according to the relationship: $y = 1.565\ h_k$.

Under the conditions of the studied hydrocomplex, the recommended structure of an approach channel around the morning-glory was greatly reduced. The approach, fully developed in plan, as submitted, was infeasible, since this would require an excessively large amount of rock excavation and a marked cutting into the mass of the earth dam. In connection with this, an alternative shaft spillway with an approach channel as shown in Figure 2[d] was also planned.

The investigation of the alternative design showed that the discharge of $Q_o = 393\ m^3/sec$ passed through the spillway when the head on the crest of the morning-glory was equal to 2.02 m, that is for a head practically equal to the head assumed in the design calculations (the coefficient of discharge thus obtained is equal to approximately 0.35). However, hydraulic conditions in the morning-glory were unsatisfactory and were characterized by the following phenomena.

The flow entered the morning-glory very unequally, being concentrated near the dividing pier. Due to this, a significantly large pulsating fin of water formed near the dividing pier. This was significantly higher than the free surface of the flow within the morning-glory. Periodic collision with the flow of water entering the morning-glory from the opposite side caused a rise of the level of this flow.

---

[d] Author's note: This alternative from now on conditionally will be called "the alternative design."

Since these undesirable phenomena were impossible to smooth (in part, because of the necessity to pass through the spillway floating bodies--including ice and logs with lengths up to 12 m), subsequent design drawings and dimensions of the approach channel, and also the position of the dividing pier were somewhat changed. The width of the approach channel along the bottom in Section x-x (B_{x-x}), located within the angle $\alpha°$ at the initial section and coinciding with the axis of the dividing pier, was determined in this case from (1) the value of the discharge crossing this section and equal to $Q_{x-x} = \frac{Q_o}{360°} \alpha°_{x-x}$ and (2) from the area of the active section, equal to $\omega_{x-x} = \frac{Q_{x-x}}{v}$ (where v is the average flow velocity within the limits of the approach). According to the determined value ω_{x-x} and the given values H and p (head on the crest of the morning-glory and the crest height above the channel floor) the value of B_{x-x} is determined from the equation:

$$B_{x-x} = \frac{\omega_{x-x}}{H+p} .$$

However, in this case, the hydraulic flow pattern in the morning-glory (Figure 3) remained essentially the same as was established through investigation of the original alternative design. In connection with this circumstance, the tests were extended. The results of the extended studies established that an alternative design of the spillway must be recommended in which (1) the design dimensions

of the approach channel are not larger than the limits first delineated in the plan (see Figure 2); (2) the required discharge capacity of the structure is assured, that is, the required discharge capacity through the spillway for the head, H_o; as in the limiting case, a head only insignificantly above (on the order of 15 percent above) H_o; (3) unconditionally there can be none of those undesirable hydraulic phenomena, which were described above. Keeping in mind what was said, the designs of the spillways investigated in subsequent tests with $Q = 393\ m^3/sec$ changed as follows: (1) the design dimensions and outline of the approach channel; (2) the level of the channel bottom (that is the value of the ratio p/H); (3) the dimensions and outline of the dividing pier; because of several tests (when a wider dividing pier was used, it took up a significant part of the spillway front) the full ring of the morning-glory was changed into an incomplete ring.

Besides this, in several tests the longitudinal slope of the bottom of the approach channel was changed and unsubmerged-flow dividing piers were installed on the morning-glory crest.

Finally, we note that <u>symmetrical</u> conditions of the flow approach to the morning-glory from the right and left banks were created in a majority of the observed tests. In the original design, this had not been assured since the part of the approach channel located at the left bank had a shorter length than that part located on the

right bank; the width of the left bank portion of the initial section of the approach channel (where the rock boundary runs) was less than the width of the right bank portion in the same section.

The tests showed the following:

a. On the morning-glory crest four to eight flow-dividing piers substantially improved the hydraulic flow conditions in the morning-glory in the sense of eliminating the undesirable phenomena discussed above and did not lower the discharge capacity of the spillway to an unallowable degree. But they can be an obstacle to ice and floating bodies.

b. Lowering the bottom of the approach channel (in order to reduce the average velocity of flow within the channel) down to a level for which $p/H_{\Theta} = 2$, did not have a sufficient effect from the point of view of improving (in the sense pointed out above) the hydraulic flow conditions in the limits of the morning-glory. However, from the point of view of the discharge capacity of the structure, it appeared to be helpful.

The same could be said about the ratio of the approach channel, the bottom of which was established at a longitudinal slope of 0.1-0.05 from the dividing pier to the reservoir. This was done to improve the distribution of the discharge around the morning-glory; i.e., to decrease the discharge near the dividing piers

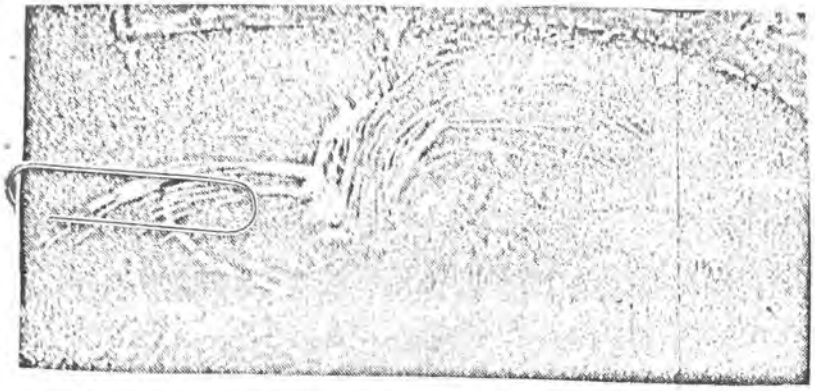

Figure 3. Flow pattern inside the morning-glory observed in the investigation of the alternative design

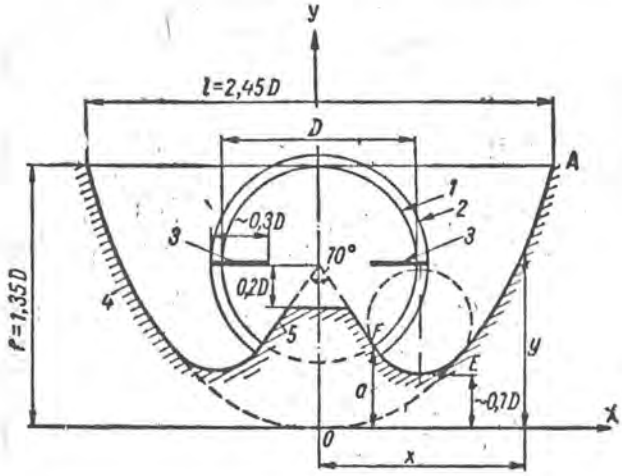

Figure 4. Recommended plan of the boundaries of the approach channel and dividing piers

1. and 2. Crest and upstream face of the morning-glory sill

3. Dividing piers

4. and 5. Plan outline of the approach channel and obstructing pier

where a concentrated pulsating jet was observed and to increase the discharge on the remaining portion of the spillway crest.

c. It would be most feasible to design the required alternative of the spillway with an incomplete ring (having two flow-dividing piers on the spillway crest) formed by a widened obstructing pier and an approach channel with a bottom level of $p/H_o = 2$. This was recommended for the final plan of the hydrocomplex as a result of our studies.

The design drawing of the approach channel and the obstructing pier for this alternative are shown in Figure 4. As we propose, this can be also recommended for other cases in which it is necessary to use this type of spillway with a restricted approach of the water to the morning-glory. The design scheme of the approach channel and the obstructing pier are also clear from this figure.

As shown from this figure, the relationship between the basic geometric parameters of the morning-glory and the approach channel, which we recommended for the conditions indicated above, are expressed in the following manner:

$$\ell = 2.45D; \quad f = 1.35D.$$

The outline of the approach channel in plan has two parts symmetrical in relation to the axis OY, each of which in turn comprises two parts: AE, which is a parabolic curve and EF, a circular arc joining the parabolic curve, with point F at the intersection of the circle describing the morning-glory at the level of its crest and the side boundary of the obstructing pier.

Design boundaries of the approach channel at the parts of parabolic outline are constructed using the following equation:

$$\frac{y}{D} = 0.8\left(\frac{x}{D}\right)^{5/2} \qquad (2)$$

Also, where these boundaries outline the arc, the circumferences, area, and center of the circle are located by trial and error so that the distance from the axis OY to the indicated circumference (calculated along the line, coinciding with the diametric section, passing parallel to the axis OY) ~ a 0.7a, where "a" is the distance from OX to point F.

The necessary diameter of the morning-glory crest at a given head H_o at this level and the calculated spillway discharge Q_o is found by the formula:

$$Q_o = 0.8\, m\pi D\sqrt{2g}\, H_o^{3/2} \qquad (3)$$

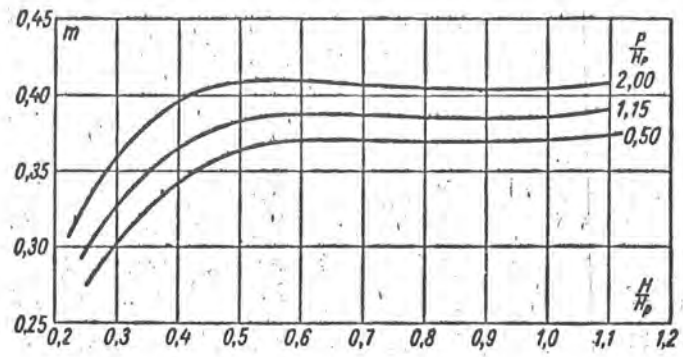

Figure 5. Graph of the relationship $m = f\left(\frac{p}{H_o} \text{ and } \frac{h}{H_o}\right)$.

The value of the coefficient of discharge of the spillway m (being used in this formula) which depends on the sizes of the ratios p/H_o and H/H_o may be found from the graph shown in Figure 5, about which some details will be given below.

Obviously, from the formula it is possible to determine the value of H when Q and D are assigned.

Let us assume a plane earthen slope with a slope of 2:1 and let us assume that it is necessary to cut the approach channel and the crest of the morning-glory spillway on this slope. We assume further that through this spillway must pass a discharge $Q_o = 395\ m^3/sec$ for a head $H_o = 2.00$ m and that the coefficient of discharge of the spillway is assigned and equals 0.40. Moreover, it is agreed to assume that we also assign the ratios $p/H_o = 2$ and $H_o/R = 0.14$.

We calculate now (at the level of the toe of the slope) the volume of earthwork which for these conditions is required for constructing the approach. Under these conditions the shape can be defined by Equation (1), or determined by means of Equation (2). In either case, we calculate the necessary diameter of the spillway crest.[e/]

[e/] For the approach channel defined by Equation (1), we get the diameter of the spillway crest from the formula: $D = Q/\pi m \sqrt{2g}\ H^{3/2}$; the size of the ratio ℓ/p (and thus also ℓ) we determine after we know D, by using the corresponding graphs, located in the previously mentioned work of P. P. Mois (Reference 1) starting from the given values of m, H_o/R, and p/H_o when $f = 2D$.

Deducting the excavation volume of the morning-glory just computed, we see that the volume of the approach channel constructed using Equation (1) reaches ~ 25,530 m^3, while the one using Equation (2) reaches ~ 8,110 m^3, that is approximately one-third. When we include the spillway, the volume of earth for the approach channel, constructed from Equation (1) will be approximately 2.3 times greater than that for the channel constructed from Equation (2). For steeper slopes this difference is obviously greater.

That such a form is feasible (for other various conditions) with respect to the volume of earth or rock work, for use as the recommended approach channel, is obvious.

Needless to say, in examination of our example of the approach channel designed with Equation (1), the result from the given quantities H_o/R, p/H_o, and m, the size of the ratio l/D being equal to ~ 3.5, is not shown to be optimum. The optimum value of the ratio ℓ/d for this channel, recommended by P. P. Mois earlier as we already cited, is (6.5-7.0)D. For the observation cited of the optimum ratio between ℓ and D, the coefficient of discharge of the spillway would be increased according to the data of P. P. Mois to 0.46, because of which the head H (for the very same value D) would be decreased approximately by 26 percent with respect to the head, described by Equation (2) which under these conditions occurs on the crest at the approach channel. However, the volume of the

channel computed from Equation (1), starting from the optimum value of the ratio ℓ/D, would be increased five times with respect to the volume of the channel described by Equation (2). This circumstance even by itself can serve as an obstacle for the feasibility of the approach channel described by Equation (1) with $\ell/D = 6.5\text{-}7.0$.

Besides, as we already have found out in the beginning of the article, such a volume generally proves to be impossible to locate in the assumed layout of the hydraulic complex.

One should always have in mind that in the use of an intake channel described by Equation (1), in accordance with the recommendations of P. P. Mois, it is necessary to locate upstream from the morning-glory a curved wall which can be described according to his data as the most effective antivortex device. In this channel which we proposed it is sufficient to have only two comparatively small dividing piers on the morning-glory crest.[f]

It is necessary to note that the location of the dividing piers on the morning-glory crest, as shown on Figure 4, is not rigidly fixed. It can be changed somewhat, namely: the piers may be located not only along the diametric section of the morning-glory, perpendicular to the axis of the tunnel, but at a certain angle (30-35°) to this

[f] Author's note: In our investigations, the piers were 9 m long, which was established as ~ 0.3D; thickness - 1.0 m, and the height about 2 m.

line, measured from the upstream side. Such a location of the piers is shown to be expedient, for example, if the piers are proposed to be used as a support for the service bridge.

The value of the coefficient of discharge m, which must be used in Formula (3) for the hydraulic design of the spillway for the ratio H/H_o in the range from 0.25 to 1.10, and for the ratio p/H_o in the range from 0.50 to 2.00, as we have already recalled, may be found on the graph shown in Figure 5.

Having determined the value of m (for any selected expression for the ratio p/H_o with $H/H_o = 1.0$, i.e., for the design head, and knowing the value of Q_o, from Formula (3) we get either D, if H_o is given (which as a rule occurs), or H if D is given.

Wanting to know which value of discharge is passing over the spillway for a head different from the design, it is necessary to solve for the corresponding value of the ratio H/H_o, to find from the graph in Figure 5 the value of m in accordance to this ratio H/H_o, and then according to Formula (3) to determine the value of Q.

In conclusion we remark that the recommendations given above with reference to the outline and dimensions of the approach channel in a confined approach to the morning-glory gives, according to our opinion, some basis for increasing the range of use of shaft

spillways. In the process of preliminary design studies the recommendations can be, as we proposed, used directly. In the last stages of the design of shaft spillways, our recommended dimensions for the outline of the approach channel should be verified in the laboratory (but only for refinement).

REFERENCES

1. Mois, P. P., "Questions Concerning the Design of Shaft Spillways," Trudy Kafedry gidrotekhnicheskikh cooruzhenii MISI im. V. V. Kuibysheva, Sb. No. 24, No. 2, 1958

2. Romaniko, N. I., "Designing a Shaft-type Spillway," Gidrotekhnicheskoe Stroitellstvo, No. 4, 1963