HYDRAULICS BRANCH
OFFICIAL FILE COPY

HYD 60

UNITED STATES
DEPARTMENT OF THE INTERIOR
BUREAU OF RECLAMATION

- - -

HYDRAULIC LABORATORY REPORT NO. 60

- - -

SIMILITUDE OF HYDRONDYNAMIC PHENOMENA IN WHICH WATER IS CONSIDERABLY MIXED WITH AIR

BY J. SMETANA
TRANSLATION FROM FRENCH

By

- - -

Denver, Colorado

July 31, 1939

HYD 60

HYD-60

UNITED STATES

DEPARTMENT OF THE INTERIOR

BUREAU OF RECLAMATION

- - -

SIMILITUDE OF HYDRODYNAMIC PHENOMENA IN WHICH WATER IS CONSIDERABLY MIXED WITH AIR

- - -

A translation of

SIMILITUDE DES PHÉNOMÈNES HYDRODYNAMIQUES OÙ L'EAU EST CONSIDÉRABLEMENT MÉLANGÉE AVEC DE L'AIR

By J. Smetana

From Report on the First Meeting of the International Association for Hydraulic Structures Research, 1938; Appendix 4; pages 97-103.

- - -

Translated by

H. G. DEWEY, JR., ASSISTANT ENGINEER,

Under Direction of

A. RUETTGERS, SENIOR ENGINEER

and

J. E. WARNOCK, RESEARCH ENGINEER

- - -

Denver, Colorado,
July 31, 1939.

HYD-60

SIMILITUDE OF HYDRODYNAMIC PHENOMENA

IN WHICH WATER IS CONSIDERABLY MIXED WITH AIR

For many hydrodynamic phenomena it is necessary to take into consideration, instead of a mass of water, a mixture of water and air whose specific gravity is much less than unity.

For example, the hydraulic jump, either undrowned or drowned (figures 6a and 6b), is always accompanied on its surface by a roller which contains a large or small amount of air. Since the hydraulic jump serves as the basis for determining the dimensions of an apron[1], the proof of the similitude of this phenomenon, that is to say, the possibility of extrapolation from the reduced scale (model) to the real scale (prototype), is very important. This proof has not been made up to the present.

For this proof, it is necessary to proceed in a general manner as follows:

(1) First study to see if the quantity of air in the mixture of air and water is constant or variable.

(2) If the quantity of air is variable, it is necessary to study, by experiments, to see if there is a functional relation between the values characterizing the phenomenon, taking these as independent variables, and the quantity of air as a dependent variable.

(3) After determining this function, it is again necessary to make the following proof: Choose values for the characteristics of the phenomenon and set up the phenomenon for the chosen values for different reduced scales (scale ratios). The value of the aforementioned function must remain constant for all different reduced scales.

---

1 Ing. Dr. Jan Smetana: (1) Travaux et Etudes des Instituts Nationaux Hydrologique et Hydrotechnique T. G. Masaryk à Praha: No. 9, "Etude expérimentale du ressaut d'exhaussement", et No. 13, "Etude expérimentale du ressaut noyé." (2) XVIe Congrès International de Navigation, Bruxelles, 1935, Ière Section, 2d Communication, Rapport par J. Smetana.

(Engineer Dr. Jan Smetana: (1) Works and Studies of the T. G. Masaryk National Hydrologic and Hydrotechnic Institute at Prague: No. 9, "Experimental Study of the Hydraulic Jump", and No.13, "Experimental Study of a Drowned Hydraulic Jump." (2) XVI International Congress of Navigation, Brussels, 1935, First Section, Second Communication, Report by J. Smetana.

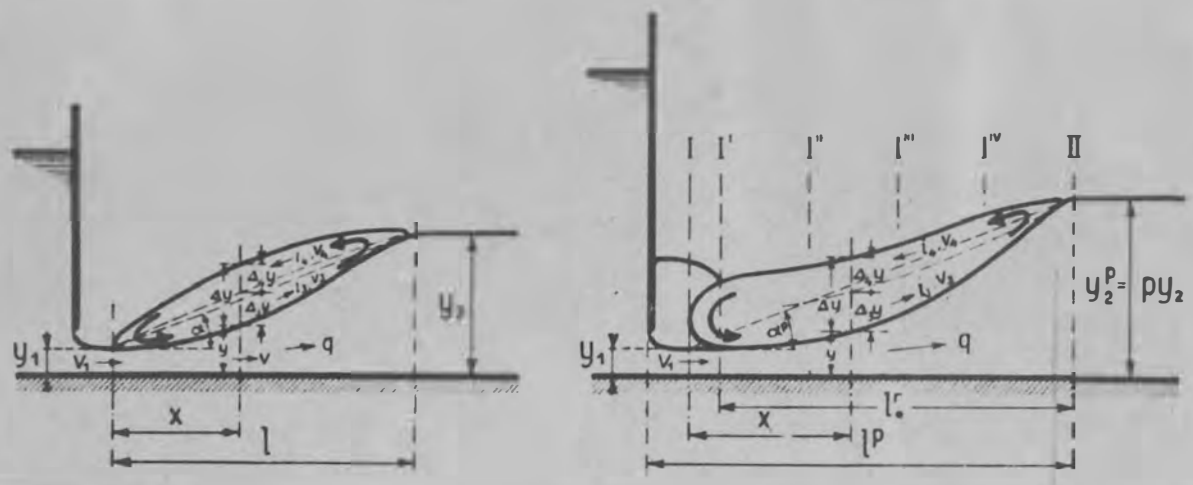

a. Undrowned Hydraulic Jump b. Drowned Hydraulic Jump

FIGURE 6

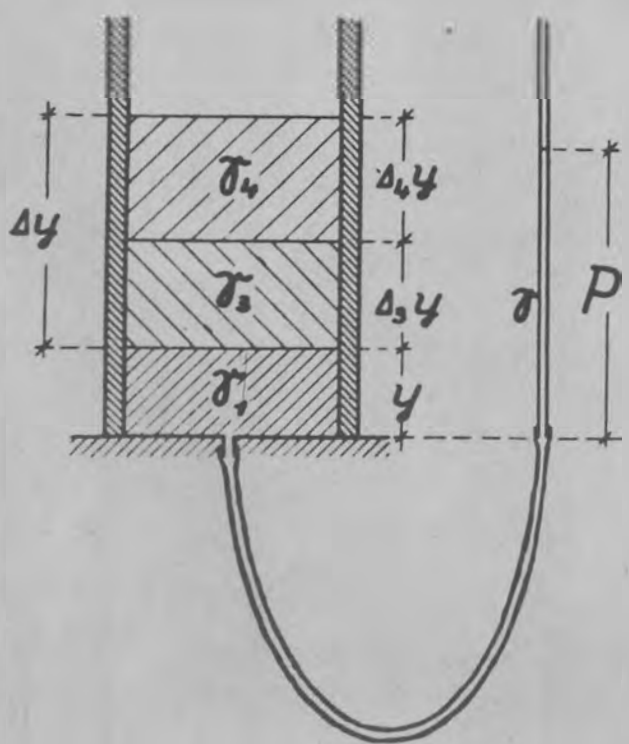

FIGURE 7

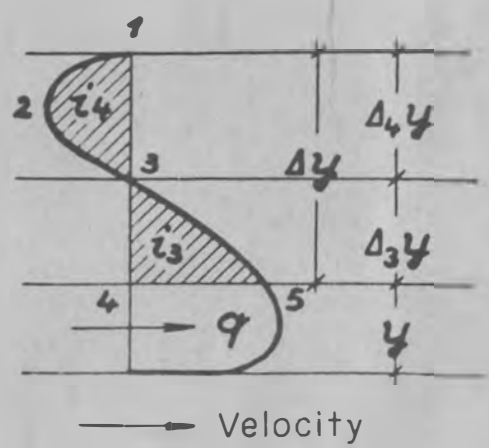

FIGURE 8

The author conducted, in 1932-1934 at the T. G. Masaryk National Hydrotechnical Institute of Prague, a number of studies on the undrowned hydraulic jump (figure 6a) and on the drowned hydraulic jump (figure 6b). The undrowned jump was formed for different values of M, the index of torrentuosity, from M = 1 to M = 34; the index of torrentuosity M being defined as the quotient of the velocity of the issuing jet V_1 (figures 6a and 6b) and the critical velocity $\sqrt{gy_1}$, where g is the acceleration due to gravity and y_1 is the depth of the shooting flow.[2] Drowned jumps were formed by increasing the depth y_2 downstream from the undrowned jump to a depth py_2, giving p, the amount of drowning, values from p = 1.1 to p = 2.5. This chassification of phenomena indicated by M and p, and the proof that the value cot α = cot α_p = 6 (figures 6a and 6b) for all the values of p and M, has made it possible for the author to derive general formulae for these two phenomena. The author has demonstrated that the undrowned jump is only a particular case of the drowned jump[3]. According to the author, the hydraulic jump is, therefore, characterized by two numbers, by the index of torrentuosity M and the degree of drowning p. It is necessary, then, to find the functional relation between these two characteristics and the quantity of air in the roller.

The quantity of air in the roller is determined by obtaining the specific gravity of the water-air mixture forming the roller. This determination is made possible only by the aid of piezometers. The bottom of the canal used by the author in these experiments was drilled with small holes to which were attached, by rubber tubes, vertical piezometers of glass tubing open at the upper end (figure 7).

Dimensions as shown on figures 6a, 6b, and 7, figure 7 being any cross section, are as follows:

y = depth of flow.
γ_1 = specific gravity of the flow
$\Delta_3 y$ = thickness of the lower zone of the roller, in which the direction of flow is downstream.
γ_3 = specific gravity of zone $\Delta_3 y$
$\Delta_4 y$ = thickness of top zone of roller, in which the direction of flow is upstream.
$\Delta_3 y + \Delta_4 y = \Delta y$ = total thickness of roller.

---

2 Translator's note: The index of torrentuosity, $M = \frac{V_1}{\sqrt{gy_1}}$ has also been called by many authors a discharge index, flow index, or velocity index.

---

3 Translator's note: Presumably in some other study not mentioned, but see footnote 1.

The author has calculated the discharge q and the discharge i_3 and i_4 of the lower and upper zones of the roller by a pitot tube. The discharge i_4 of the upper zone is practically equal, as the author has proved[3], to the discharge i_3 of the lower zone of turbulence. As shown on figure 8, the value of $\Delta_4 y$ is established directly. By taking the area 3-4-5 equal to the area 1-2-3, the values of $\Delta_3 y$ and y are also determined.

Expressing static equilibrium as shown on figure 7, it is possible to write the equation:

$$\gamma P = \gamma_1 y + \gamma_3 \Delta_3 y + \gamma_4 \Delta_4 y + \gamma z \quad \ldots\ldots\ldots\ldots\ldots\ldots\ldots (a)$$

The author adds to the right side of this equation the value γz, which must express the pressure against the bottom of the canal due to the curvature of the streamlines, z being the height representing this pressure (pressure-head). The water in the piezometer has a specific gravity $\gamma = 1$.

By letting $\gamma_3 = \gamma_4$ and dividing equation (a) by γ, we may write:

$$P = y + \frac{\gamma_4}{\gamma} \Delta y + z \quad \ldots\ldots\ldots\ldots\ldots\ldots\ldots\ldots\ldots\ldots (b)$$

In this equation γ_4 and z are unknown. Letting z = 0, it is possible to determine the other unknown, γ_4:

$$\gamma_4 = \frac{\gamma\ (P-y)}{\Delta y} \quad \ldots\ldots\ldots\ldots\ldots\ldots\ldots\ldots\ldots\ldots\ldots (c)$$

The author has proved[3] that, for a degree of drowning $p \geq 1.4$, the turbulence is nearly free of air, that is to say γ_4 is unity. For this case it is possible to determine the pressure head due to the curvature of the streamlines accordingly:

$$z = P - (y + \Delta y).$$

For a hydraulic jump with M = 6.79, p = 1.4, and q = 0.0866 m^3/ s/m (0.931 c.f.s./ft.), for example, values of z determined from this relation are in section I' (figure 6b) in meters, 0.027 (0.089'); in section I", 0.018 (0.059'); in section I''', 0.01 (0.033'); and in section $I^{'v}$, 0.001 (0.003'); corresponding values of (y + Δy) being in meters, 0.229 (0.75'), 0.243 (0.80'), 0.277 (0.91'), and 0.304 (0.99'). It is evident that the pressure-head z due to the curvature of the streamlines, is relatively very small and therefore negligible; and consequently the values of γ_4 determined by equation (c) are close enough and only very little greater than actual values.

In figure 9a the values of γ_4 determined by equation (c) are represented by a hydraulic jump p = 1, and M = 1 to M = 19.857.

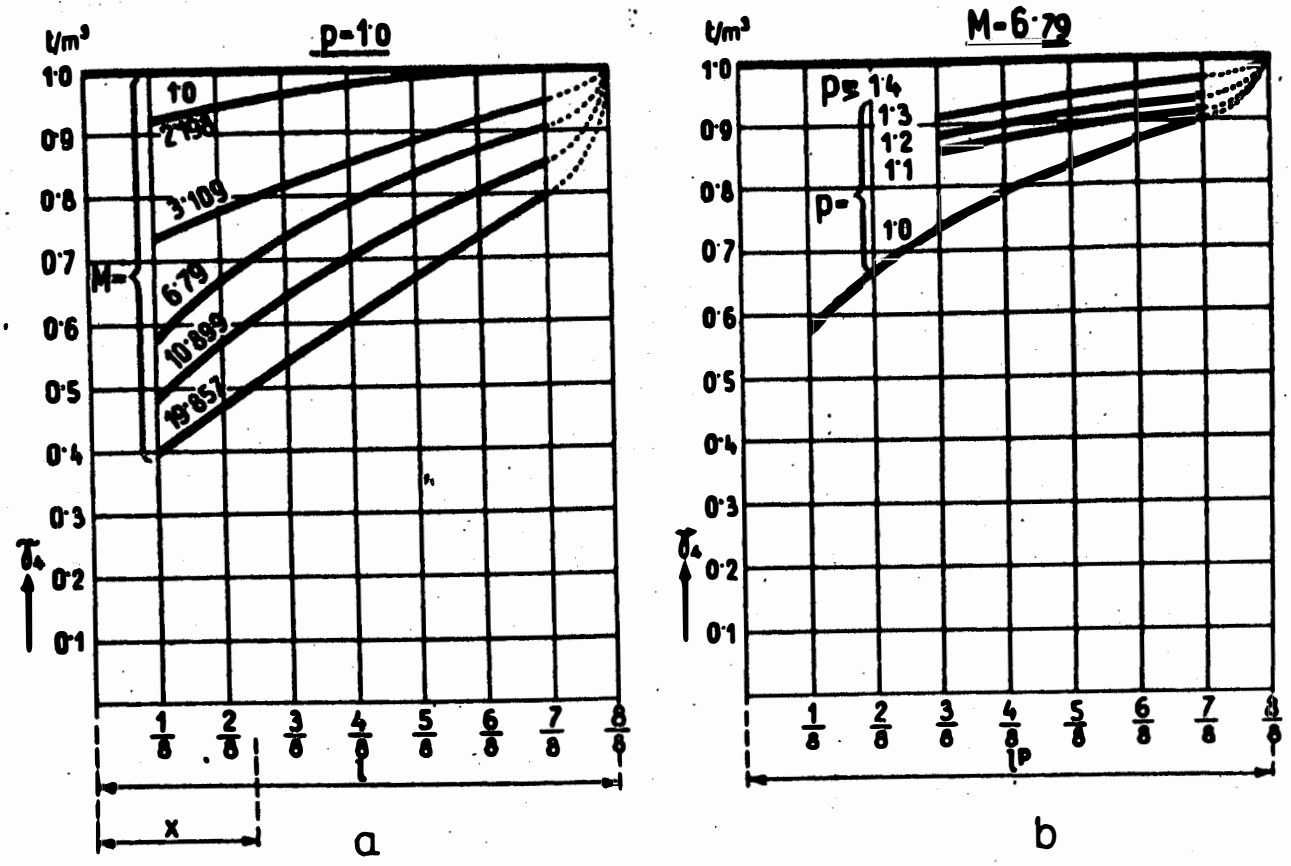

FIGURE 9

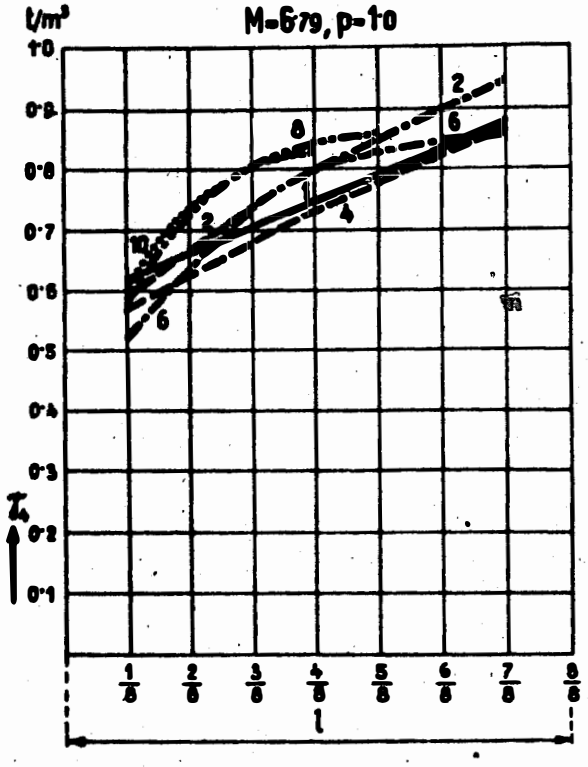

FIGURE 10

In figure 9b the values of γ_4 determined by equation (c) are for M = 6.79, but the value of p varies from p = 1 to p = 1.4.

It can be seen from these two diagrams that between the values of M, p, and the distance x (figures 6a and 6b) from the upstream limit of the roller to the section in question on one hand, and the specific gravity γ_4 on the other hand, that there exists the following functional relation: The specific gravity γ_4 of the roller is small: (1) When the degree of drowning p is small; (2) when the index of torrentuosity M is large; and (3) when the section in question is nearer the upstream limit of the roller. Thus the second condition of the similitude as stated above is satisfied.

The satisfying of the third condition is shown by the diagram on figure 10. This diagram represents the results of studies which have been made for a hydraulic jump with M = 6.79 and p = 1.0, and which has been tested for the scales 1:1, 1:2, 1:4, 1:6, 1:8, and 1:10; that is to say, with a discharge q = 0.0114 $m^3/s/m$ (0.123 c.f.s./ft.); 0.0311 (0.335); 0.0866 (0.931); 0.1571 (1.690); 0.2420 (2.600); and 0.3366 (3.619).

For all these scales the specific gravity γ_4 had to remain the same for a given cross section. The limits in which γ_4 varied measured 0.1 t/m^3 which is quite acceptable considering the method and errors of measurement.

Hence, on figure 10, the functional relation also remains constant for different scales.

For p >1.4 and γ_4 = 1 t/m^3 (unity) the roller contains practically no air.

From the specific gravity established, it is easy to determine the volume of air contained in the roller. If, for example, γ_4 = 0.4 t/m^3 (0.4) the volume of air is, neglecting the specific gravity of air, 0.6 t/m^3 (0.6) for 1 m^3 of volume (unit volume) of roller.

The two figures 9a and 9b clearly show, then, that there exists a functional relation between the characteristics M and p of a hydraulic jump, and the volume of air contained in the roller.

In the foregoing discussion the author believes to have demonstrated exactly the similitude of a hydraulic jump undrowned and drowned within the limits of scale from 1:1 to 1:10. There is no reason to doubt that the similitude doesn't hold beyond the limits studied.

The author has derived formulae for the optimum dimensions of a stilling pool on the basis of dimensions for a drowned hydraulic jump[3]. From the proof of the similitude of the hydraulic jump phenomenon there is also assured the exact basis of the formulae mentioned above.