508

[redacted]

PREPARED FOR THE USE OF DEPARTMENT OF
WATER RESOURCES, STATE OF CALIFORNIA

UNITED STATES
DEPARTMENT OF THE INTERIOR
BUREAU OF RECLAMATION

HYDRAULIC MODEL STUDIES OF THE RIVER OUTLET WORKS AT OROVILLE DAM--CALIFORNIA DEPARTMENT OF WATER RESOURCES STATE OF CALIFORNIA

Hydraulics Branch Report No. Hyd-508

DIVISION OF RESEARCH

OFFICE OF CHIEF ENGINEER
DENVER, COLORADO

October 11, 1963

UNITED STATES
DEPARTMENT OF THE INTERIOR
BUREAU OF RECLAMATION
OFFICE OF CHIEF ENGINEER
BUILDING 53, DENVER FEDERAL CENTER
DENVER 25, COLORADO

IN REPLY
REFER TO:

October 11, 1963

Mr. William E. Warne, Director
Department of Water Resources
State of California
Sacramento 2, California

Dear Mr. Warne:

I am pleased to submit Hydraulics Branch Report No. Hyd-508 which constitutes our final report on studies conducted on the river outlet works of Oroville Dam. I believe this report will satisfy the requirements of your office for a comprehensive discussion of the test program.

Sincerely yours,

B. P. Bellport
Chief Engineer

Enclosure

PREFACE

Hydraulic model studies of features of Oroville Dam and Powerplant were conducted in the Hydraulic Laboratory in Denver, Colorado. The studies were made under Contract No. 14-06-D-3399 between the California Department of Water Resources and the Bureau of Reclamation.

The basic designs were conceived and prepared by Department of Water Resources engineers. Final designs were established through model studies that verified the adequacy of the basic designs, or led to modifications needed to obtain more satisfactory performance. The high degree of cooperation that existed between the staffs of the two organizations helped materially in speeding final results.

During the course of the studies, Messrs. H. G. Dewey, Jr., D. P. Thayer, G. W. Dukleth, J. J. Doody, and others of the California staff visited the laboratory to observe the tests and discuss model results. Mr. K. G. Bucher of the Hydraulics Unit of the Department was assigned to the Bureau laboratory for training and for expediting the test program. Mr. Dukleth provided liaison between the Bureau and the Department.


ARTIST'S CONCEPTION
of
OROVILLE DAM

P8416-D-40567

CONTENTS

CONTENTS--Continued

UNITED STATES
DEPARTMENT OF THE INTERIOR
BUREAU OF RECLAMATION

Office of Chief Engineer
Division of Research
Hydraulics Branch
Denver, Colorado
October 11, 1963

Hydraulics Branch Report
No. Hyd-508
Compiled by: D. Colgate
Checked by: W. P. Simmons
Reviewed by: W. E. Wagner
Submitted by: H. M. Martin

Subject: Hydraulic model studies of the river outlet works at Oroville Dam--California Department of Water Resources--State of California

PURPOSE

This model study was made to determine the shape and location of appurtenances required to adequately dissipate the energy of the high-velocity jets from the Howell-Bunger control valves in the river outlet works at Oroville Dam. The control valves are to be located within diversion tunnel No. 2 immediately downstream of the tunnel plug.

CONCLUSIONS

1. The splitter piers suspended from the tunnel roof downstream from the control valves (Figure 4A) were incapable of adequately stilling the flow to create acceptable flow conditions.

2. The energy dissipating devices shown in Figure 13 will adequately still any discharge from the Howell-Bunger control valves so that acceptable flow conditions will exist at the draft tube tunnel connection of power unit No. 1, 200 feet downstream from the valves.

3. Pressures on the deflector ring will be atmospheric or above for all discharges and valve openings.

4. The baffle piers should be streamlined as shown to reduce the possibility of adverse pressures on the pier walls. The flow at the location of the piers will contain a large volume of entrained air which will further minimize the danger of cavitation damage.

5. The air demand of the jets from the control valves is quite large, amounting to about 2-1/2 times the valve discharge for normal operation (Figure 16). An air vent, about 45 square feet in cross-sectional area, will allow adequate aeration of the outlet works system to prevent adverse pressure conditions in the vicinity of the valves.

6. The tunnel periphery downstream from the control valves will be subjected to jets flowing at velocities up to 200 fps. To protect the surfaces from the high-velocity flows, steel lining should be placed on the full periphery of the tunnel from the valves to the downstream side of the deflector ring, on the lower 180° of the tunnel for an additional 60 feet, and on the four upstream baffle piers (Figure 13).

INTRODUCTION

Oroville Dam is a key feature of the California State Water Facilities. The damsite is on the Feather River about 5-1/2 miles northeast of Oroville in north central California (Figure 1). The dam will be an earthfill structure 735 feet high and will create a reservoir with a capacity of 3-1/2 million acre-feet.

During initial construction two 35-foot-diameter tunnels, each about 4,500 feet long, will divert the Feather River through the left abutment of the dam. Later the tunnels will be plugged about 2,700 feet from the outlet portals and the downstream portions utilized for the tailraces of the powerplant and for discharges from the outlet works. The first two units of the powerplant and the river outlet works will discharge into Tunnel No. 2, and the remaining four power units will discharge into Tunnel No. 1 (Figure 2). Discussions of other model studies and features of the dam are presented separately.1/, 2/, 3/, 4/

This study concerns the river outlet works extending through the tunnel plug of Tunnel No. 2. The outlet works will be controlled by two 54-inch Howell-Bunger valves operating under a maximum head of 672 feet. The normal discharge, 3,700 cfs, will be realized with the valves fully opened under a head of 322 feet. At higher reservoir elevations the valves will be throttled to limit the flow to 3,700 cfs. A maximum discharge of 5,400 cfs is possible under maximum head and with both valves fully opened. The outlet works will operate continuously to meet downstream water demands from the time of tunnel closure until the powerplant is placed in operation. The outlet works may be used for emergency releases after the plant is in operation.

The California Department of Water Resources specified the use of Howell-Bunger valves. No specific study, other than calibration, was made concerning these valves. The purpose of this model study was to determine an acceptable baffle arrangement which would dissipate the energy of the high-velocity jets from the control valves

1/Numbers refer to Bibliography.

and produce tranquil tunnel flow at the outlets of power unit No. 1. Effective dissipation was essential to prevent cavitation on the tunnel walls and insure the integrity of the installation. The criterion was established that the outlet valves should be located as near to the draft tube outlet ports of power unit No. 1 as possible.

THE MODEL

All discharges and dimensions given in this report are prototype values unless otherwise stated. "Distance from the valves" refers to distances from the downstream face of the cone.

The 1:18 model scale was determined from a study of the required discharges and pressures and space available in the laboratory. With the selected scale ratio, valves with a 3-inch inlet diameter represented the 54-inch prototype valves, and a model discharge of 3.91 cfs under a head of 37.3 feet represented 5,370 cfs under 672 feet of head. The model tunnel diameter was 23.33 inches. Laboratory space permitted a tunnel length of 41 feet representing 756 feet of prototype tunnel. These values were adequate for detailed studies of the energy dissipator design.

The preliminary model included two Howell-Bunger valves mounted with their axes parallel and horizontal, 3 feet above and 6 feet on either side of the tunnel centerline, and extending 10 feet from the downstream face of Tunnel No. 2 bulkhead (Figure 3). The valves were machined to very close tolerances and accurately represented the prototype Howell-Bunger control valves. The linear movement of the operating sleeve of each control valve was determined by a pointer fixed to the sleeve which moved over a stationary scale on the valve body. An air vent 4 feet in diameter extended through the bulkhead 8 feet above each valve.

The initial baffle arrangement is shown in Figures 3 and 4A. Four splitter piers 3 feet wide, 34 feet long, and 3 feet apart were suspended from the tunnel roof at a distance 6 feet 5 inches from the downstream face of the valves. The bottom surfaces of the piers were in a horizontal plane 8.4 feet above the tunnel centerline. The upstream face of each pier was sloped downward 30° from the tunnel roof. A half ring 2 feet thick and with a 2/3:1 slope on the upstream face extended around the upper half of the tunnel at the downstream face of the piers.

A control weir with the crest at the center of the tunnel was installed 540 feet downstream from the valves. This weir was necessary, in the initial design, to maintain a powerplant tailrace surge reservoir within the tunnel. The initial design provided that power units No. 5 and 6 would discharge directly into Tunnel No. 2, and that a pool of

water would be present upstream for the other units to draw from when a surge occurred.

Preliminary studies consisted of visual observation to determine the adequacy of operation. Discharge, valve opening, and tailwater elevations were determined for each test run. Discharges were determined with the laboratory Venturi meters, the head in the approach conduits to the Howell-Bunger valves was determined with a mercury manometer, air demand was measured with flat-plate orifices, and air pressures were determined with a water-filled U-tube. The tailwater elevation was determined by a scale printed on the plastic wall of the tunnel about one conduit diameter upstream from the weir (Figure 6B).

INVESTIGATION

Preliminary Studies

Initial design.--The conical jets from the valves struck the sloped upstream faces of the suspended splitter piers and the walls of the tunnel about 12 feet downstream from the valves (Figure 4B). The part of the jet which was not interrupted by the piers on the upper half of the tunnel was deflected toward the center of the tunnel by the sloping face of the half ring at the downstream end of the piers. Figure 4B shows the action at the suspended piers for a discharge of 3,900 cfs with both valves fully opened. The jetting water swept along the tunnel invert and entered a hydraulic jump that formed in the tunnel at various distances downstream from the valves depending on the discharge, valve opening, head, and tailwater depth, d_2. With a discharge of 4,400 cfs, a d_2 of 32 feet, and the valves fully opened, the jump formed about 500 feet downstream from the valves (Figure 5B). The jump formed about 300 feet downstream for a discharge of 3,700 cfs and a d_2 of 27 feet.

The energy dissipating devices of this preliminary design were incapable of stilling the flow sufficiently to create acceptable flow conditions in the tunnel. In addition, it appeared that cavitation with resulting damage to the angular splitter piers would occur due to the high-velocity jets.

Deflector half ring.--Tests were conducted with the four splitter piers removed from the tunnel roof, but the half ring remained in place (Figure 6A, and Figure 7, Test A). With this configuration the flow appeared similar to the preliminary design with super critical flow occurring along most of the tunnel invert and the jump sweeping far downstream. The weir maintained a water depth of about 27 feet for the normal discharge of 3,700 cfs, and about 32 feet for 4,400 cfs. However, the flow at the weir was extremely

rough with waves 7 to 10 feet high surging over the crest. It was apparent that some type of baffling was required on the tunnel invert to slow the high-velocity flows and obtain smoother downstream conditions.

Full deflector ring.--The half ring of the preliminary design was reversed to present a vertical face to the high-velocity jet in an attempt to deflect the flow more abruptly inward, and was continued around the tunnel to make a full ring to also interrupt the flow along the tunnel invert (Figure 7, Test B). The flow with this full ring was somewhat improved over that obtained with the half ring, but was still unacceptable. The ring appeared to be too small to adequately deflect the flow inward.

A larger ring with a 2-foot 9-3/4-inch vertical upstream face was installed 27 feet 9 inches downstream from the valves (Figure 7, Test C). This ring caused the jet to be deflected sharply inward and be concentrated nearer the ring. This was beneficial because it decreased the downstream component of the velocity and reduced the tendency for the flow to sweep out of the tunnel. The flow, although improved, was still unacceptable. Sweep out occurred at a minimum discharge of 1,800 cfs with the valves fully opened and a flow depth of 21 feet.

The ring was split on the horizontal centerline and the lower half moved upstream 10-1/2 feet. The upper half was retained 27 feet 9 inches downstream from the valves (Figure 7, Test D). Operation with this split ring was no better than with the continuous full ring.

At this stage of the test program, the California Department of Water Resources decided to introduce flows from power units No. 1 and 2 directly into Tunnel No. 2. This design would always provide a pool of water to be drawn upon or discharged into during surging in the tunnel downstream from the plug. Therefore, the need for a weir was eliminated. All subsequent tests were performed using a tailwater control gate at the downstream end of the model to hold the tailwater at elevation 225 as established by Thermalito Diversion Dam located a short distance downstream (Figure 1). This elevation resulted in a flow depth of 17-1/2 feet in the tunnel.

A ring with a 3-foot 4-1/2-inch vertical upstream face (Figure 7, Test E) was tested at various locations. The best flow resulted when the upstream face of the ring was 24 feet from the valves. Since high-velocity flow still swept down the tunnel for discharges greater than about 2,000 cfs, an 8-foot-high plate was mounted on the tunnel invert 80 feet from the valves and normal to the flow. Figure 8 shows the flow conditions with the valves fully opened with a discharge of 5,400 cfs and a d_2 of 27 feet. The obstruction plate

on the tunnel invert was not sufficiently large to force a hydraulic jump, but caused a huge boil downstream from the ring and subcritical flow velocities in the tunnel downstream from the plate. It appeared that the general idea of a full deflector ring with additional floor baffling downstream could be developed into an acceptable design.

Deflector ring pressures.--From the preceding tests an optimum location and size of deflector ring was determined. A metal ring was accurately fabricated and the exposed flow surfaces were fitted with 21 piezometers (Figure 9). The ring was installed with the upstream edge 24 feet downstream from the valves. Measurements showed that all pressures were atmospheric or higher for any combination of valve openings and for the full range of discharges and heads (Figure 9).

Baffle piers.--Various sizes, shapes, and locations of invert baffle piers were tested. An optimum size and location were determined, and four streamlined 10-foot-high baffles were constructed and installed 2 feet apart with their vertical faces 69 feet downstream from the valves (Figures 10, 12A, and 13). Flow conditions in the tunnel were very good for the normal discharge of 3,700 cfs with the valves fully opened and a d_2 of 17-1/2 feet (Figure 11A). However, for the maximum discharge of 5,400 cfs, sufficient high-velocity flow passed between the baffle piers to sweep the tailwater down the tunnel (Figure 11B).

Three small baffle piers, one-half the height of the main piers, were installed (sloped faces upstream) between the main piers (Figure 12B) and tested. Tests also were conducted with the vertical faces of the small piers placed upstream between the main piers (Figure 12C) and at a distance 12 feet downstream from the piers (Figure 12D). Although these baffle arrangements required slightly more discharge, or a higher head, to sweep the tailwater downstream, the maximum discharge still caused sweep out. Larger baffle piers were deemed necessary.

A second set of baffle piers identical to the four main piers was installed 66 feet downstream from the first set. Flow with this arrangement was acceptable for all combinations of valve openings and discharges; this design was recommended for prototype use.

Recommended Design

Installation.--The valves were installed 3 feet above the tunnel centerline and 200 feet upstream from the draft tube outlets of power unit No. 1. A full deflector ring, 4 feet high with sloping upstream and downstream faces was placed 24 feet downstream

from the valves. Two sets of four baffle piers each were placed 69 and 135 feet, respectively, downstream from the valves (Figure 13). A single large air vent admitted air into the tunnel above the valves. Figure 14 is an overall view of the model with the top half of the tunnel removed. The locations of the connections of the three-barrel draft tubes of power units No. 1 and 2 are shown on the left tunnel wall beyond the second set of piers.

Flow conditions.--With both valves fully opened and with the normal discharge of 3,700 cfs and a flow depth of 17-1/2 feet, flow conditions in the tunnel were excellent (Figure 15A). With both valves opened 53.4 percent and the normal discharge of 3,700 cfs under a head of 680 feet, the flow was slightly rough at the upstream baffle piers but quickly smoothed out and became quite tranquil at the station of power unit No. 1 (Figure 15B). With the maximum discharge of 5,400 cfs and a flow depth of 19 feet, the flow was rough but acceptable and the tailwater would not sweep out (Figure 15C). With one valve closed and the other fully opened, discharging 2,700 cfs under a head of 680 feet, the flow was excellent and appeared quite similar to the normal discharge flow shown in Figure 15A.

Air demand.--A large plenum chamber was placed over the air intake port to permit the control and measurement of air being drawn into the system (Figure 16). A pressure tap was installed in the bulkhead to determine the pressure in the tunnel. The relationship between the intake of air and the pressure at the bulkhead for various operating conditions is shown in Figure 16.

A maximum air velocity of 300 fps is recommended for design purposes to keep below the "whistling" range. The head differential required to create an air velocity of 300 fps is about 1.5 feet of water. Assuming an entrance, line, and exit loss in the air duct of 0.5 foot, a maximum subatmospheric pressure of 2 feet of water was desired at the bulkhead. At maximum flow conditions the model studies indicated an air demand of about 13,500 cfs, or 2-1/2 times the valve discharge, for a subatmospheric pressure of 2 feet of water at the bulkhead. To maintain a maximum air duct velocity of 300 fps under the above conditions, the air duct should be 45 square feet in cross-sectional area.

The accurate prediction of air demand by use of scale models has not been proven. Air demand measurements have been made on

models and in prototype installations,* but model prototype comparisons are rare. No comparisons were found for Howell-Bunger valves used in installations similar to the Oroville outlet works. The computed prototype air demand shown in Figure 16 was derived from the model by direct application of the laws of hydraulic similitude based on the model scale of 1:18. The prototype head at the bulkhead (Figure 16) is 18 times the model head at the bulkhead, and the prototype air demand in cfs is 1374.6 times the model air demand. More reliable conversion or correction factors are not presently available.

Discharge curves.--Discharges through the Howell-Bunger valves were measured with the calibrated laboratory Venturi meters. The pressure head in the valve approach conduit was measured 9 feet upstream from the valves, and the total approach head (pressure head plus velocity head) was computed for a range of valve openings and discharges. A chart was drawn showing the relationship between the total head approaching the valves and the discharge through both valves at identical openings (Figure 17). Discharge through either valve is one-half the value shown on the chart.

Protective lining.--The velocity of the jets from the control valves operating under the maximum head of 672 feet will be about 200 fps. Flow surfaces exposed to these jets are in danger of being damaged by jet erosion, and possibly by cavitation erosion. To minimize this danger, the flow surfaces should be steel clad for the full periphery of the tunnel from the valves to and including the deflector ring, and for the lower half of the tunnel from the ring to and including the upstream baffle piers. The downstream baffle piers are in an area of reduced velocity where the flow contains a large amount of entrained air. Therefore, these piers are not in danger of damage by jet or cavitation action, and need not be steel clad.

Valves at the Tunnel Centerline

Construction considerations indicated that installation of the guard gates and piping pertaining to the outlet works would be simplified

Among other pertinent reports: "Characteristics of Fixed-Dispersion Cone Valves," by R. A. Elder and G. B. Dougherty, Transactions ASCE, 1953. This paper presents measured prototype air demand information for Howell-Bunger valves, but states " * * it was recognized that large quantities of air would be required although quantitative values were unobtainable from the model." And again: "The model tests proved definitely that the air requirements are a function of the deflector structure design. Therefore the data that have been presented are only applicable for a structure identical to that built * * *."

if the valves could be lowered 3 feet to the tunnel centerline. Therefore, the model valves were lowered to this location and tested.

For the initial study, the ring and baffle arrangement in the recommended design was used (Figure 13). Flow conditions in the tunnel were generally unsatisfactory for discharges greater than about 2,000 cfs. The jet was concentrated at midtunnel just downstream from the deflector ring and impinged on the tailwater, or on the tunnel floor after sweep out, about 135 feet downstream from the valves. With the maximum discharge of 5,400 cfs the jump swept out of the tunnel, and for 3,700 cfs the flow in the tunnel was exceedingly rough with waves about 10 feet high.

A large eccentric deflector ring protruding 10 feet into the tunnel at the top and 4 feet at the bottom was installed 24 feet downstream from the valves (Figure 18A). The flow in the tunnel for maximum discharge, 5,400 cfs, was very unstable (Figure 19B), and only slightly better for 3,700 cfs.

For a discharge of 5,400 cfs, and with the air vent fully opened, the air demand was about five times the water discharge, and the pressure at the bulkhead was subatmospheric 7-1/2 feet. When the air vent was closed, the pressure upstream from the deflector ring dropped until water filled the tunnel (Figure 19A). The ambient pressure measured in the model and scaled up to prototype pressures indicated vapor pressure in the prototype structure for this operation.

The deflector ring was trimmed to protrude 7 feet into the tunnel at the top and 4 feet at the bottom (Figure 18B). The flow in the tunnel downstream from the deflector ring was more violent with this deflector than with the larger one (Figure 19C). The pressures at the bulkhead were slightly higher; subatmospheric pressures of 4.9 feet of water for a discharge of 5,400 cfs with the vent opened, and 24 feet with the vent fully closed were observed.

From these model studies, it appeared that the required baffling and air intake arrangement would be quite complex if the valves were placed at the tunnel centerline. Because of the relatively simple baffle arrangement and the much more modest air demand with the valves 3 feet above the centerline, the higher valve location was recommended and the tests with the valves at the centerline were discontinued.

BIBLIOGRAPHY

1. "Hydraulic Model Studies of the Diversion Tunnels for Oroville Dam," Report No. Hyd-502, by W. P. Simmons

2. "Hydraulic Model Studies of the Draft Tube Connections and Surge Characteristics of the Tailrace Tunnels for Oroville Powerplant," Report No. Hyd-507, by W. P. Simmons

3. "Hydraulic Model Studies of the Penstock Intake Control Structure for Oroville Dam," Report No. Hyd-509, by Donald Colgate

4. "Hydraulic Model Studies of the Spillway for Oroville Dam," Report No. Hyd-510, by T. J. Rhone

FIGURE 1
REPORT HYD-508

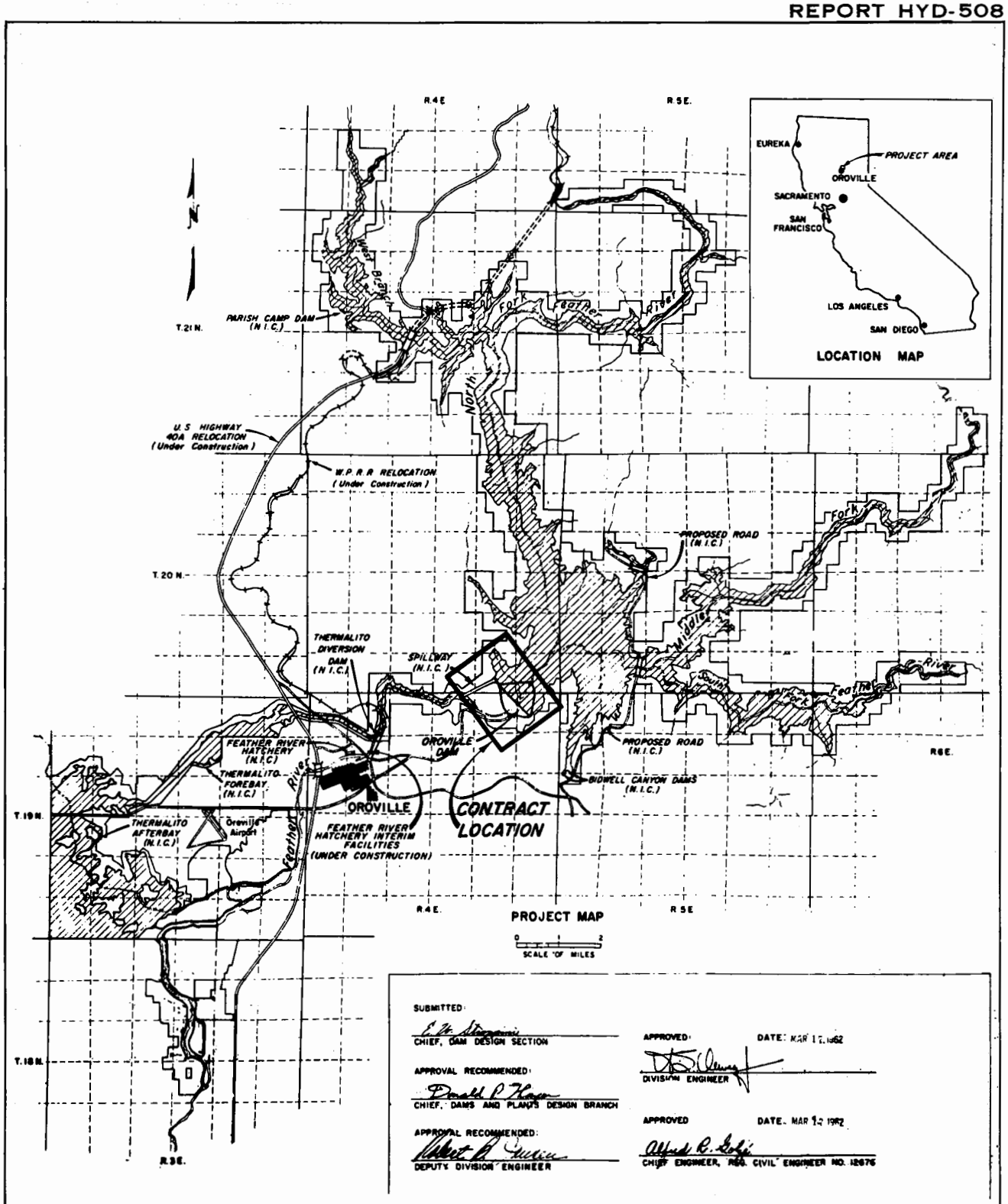

OROVILLE DAM

RIVER OUTLET WORKS STUDIES

LOCATION MAP

FIGURE 2
REPORT HYD. 508

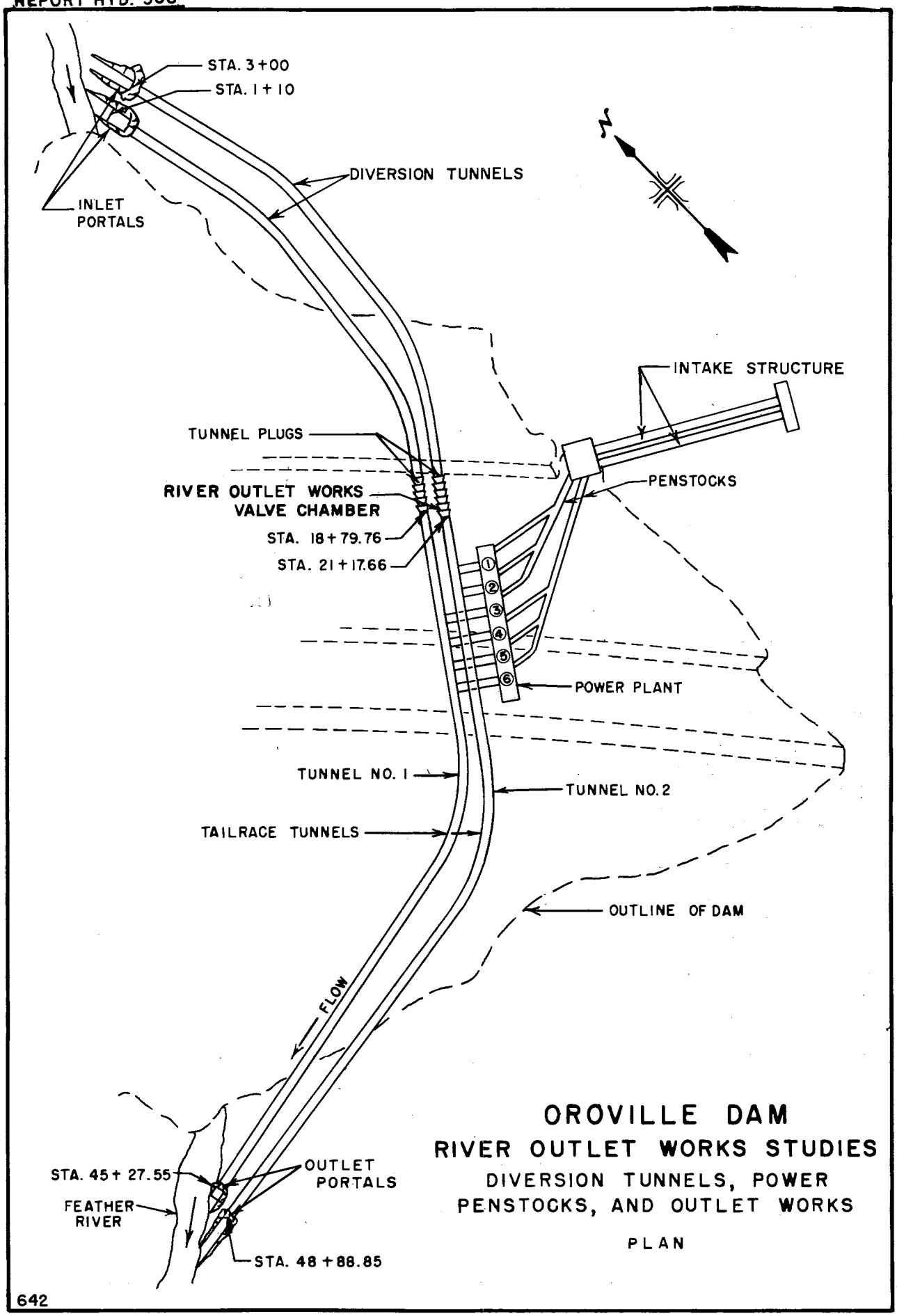

OROVILLE DAM
RIVER OUTLET WORKS STUDIES
DIVERSION TUNNELS, POWER PENSTOCKS, AND OUTLET WORKS
PLAN

642

FIGURE 3
REPORT HYD. 508

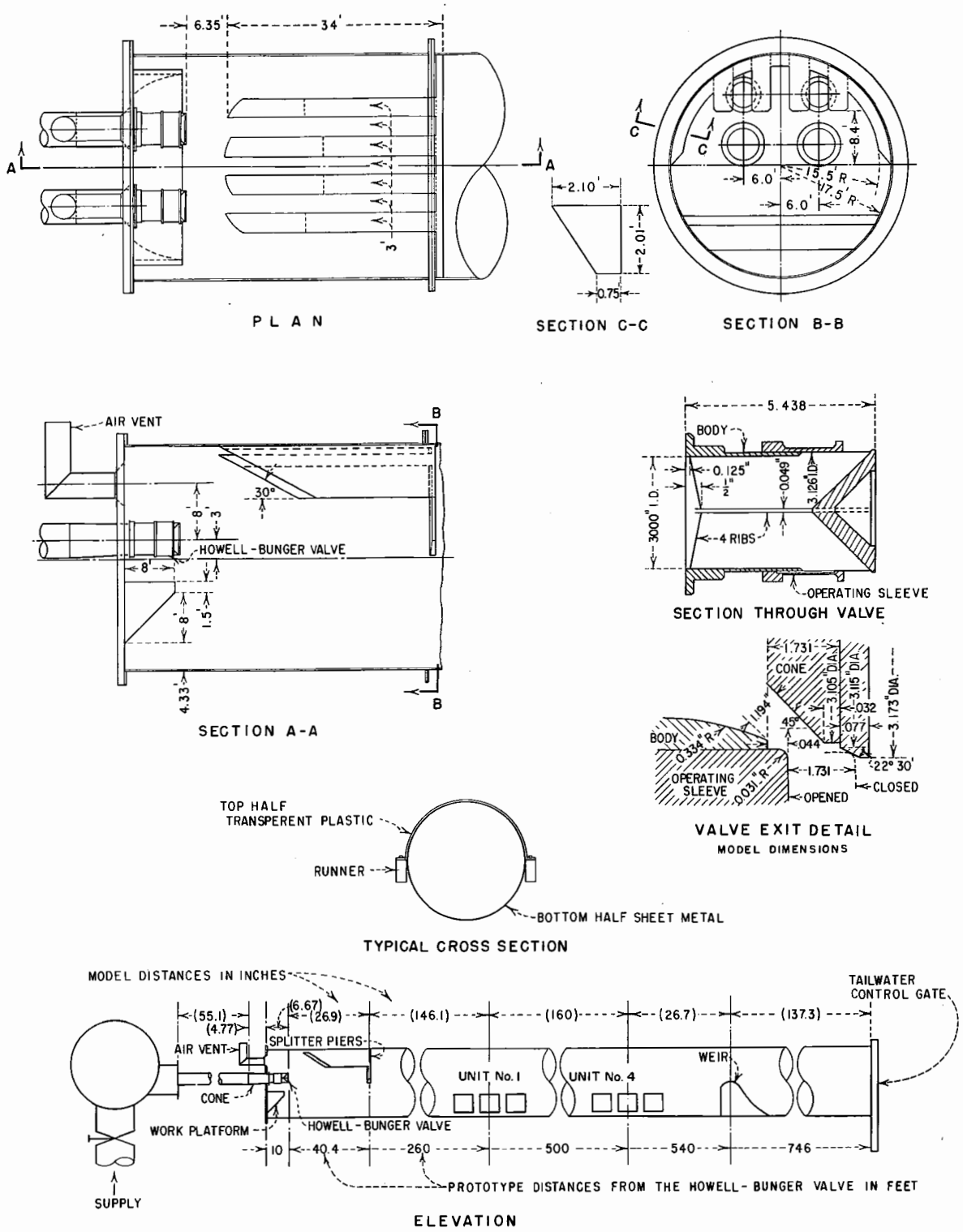

OROVILLE DAM
RIVER OUTLET WORKS STUDIES
PRELIMINARY DESIGN DETAILS
1:18 SCALE MODEL

642

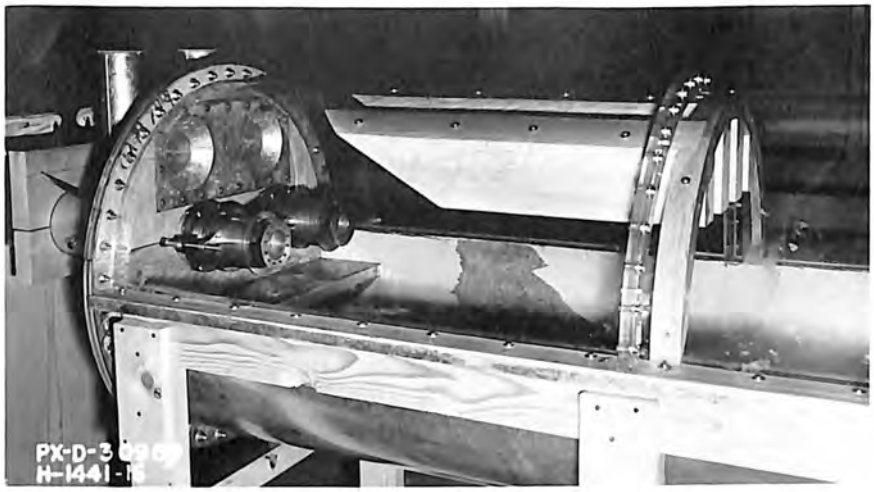

A. Preliminary design with 4 suspended splitter piers, half ring, and two air vents.

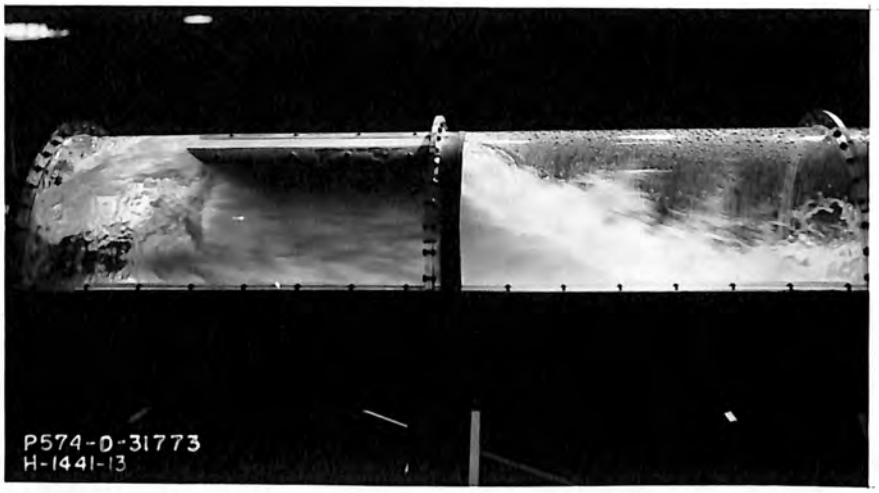

B. Q = 3900 cfs
H = 360 ft
Both valves opened 100%

OROVILLE DAM
RIVER OUTLET WORKS STUDIES

Preliminary design
1:18 scale model

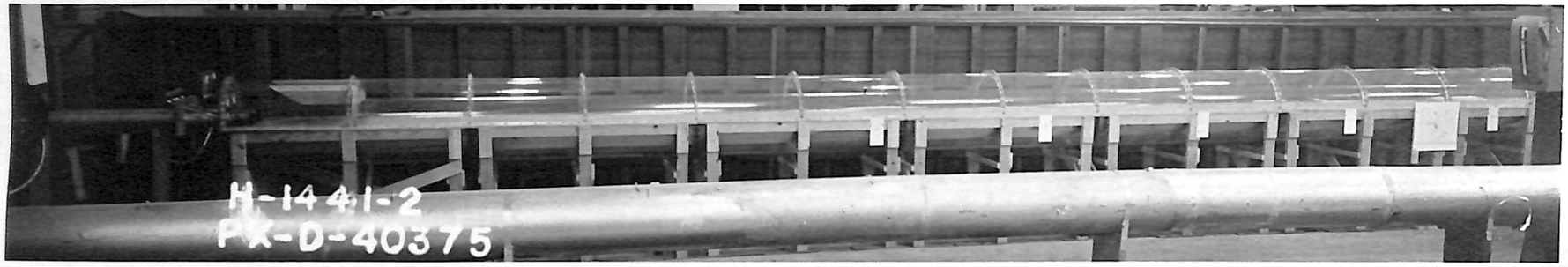

A. Overall view of model.

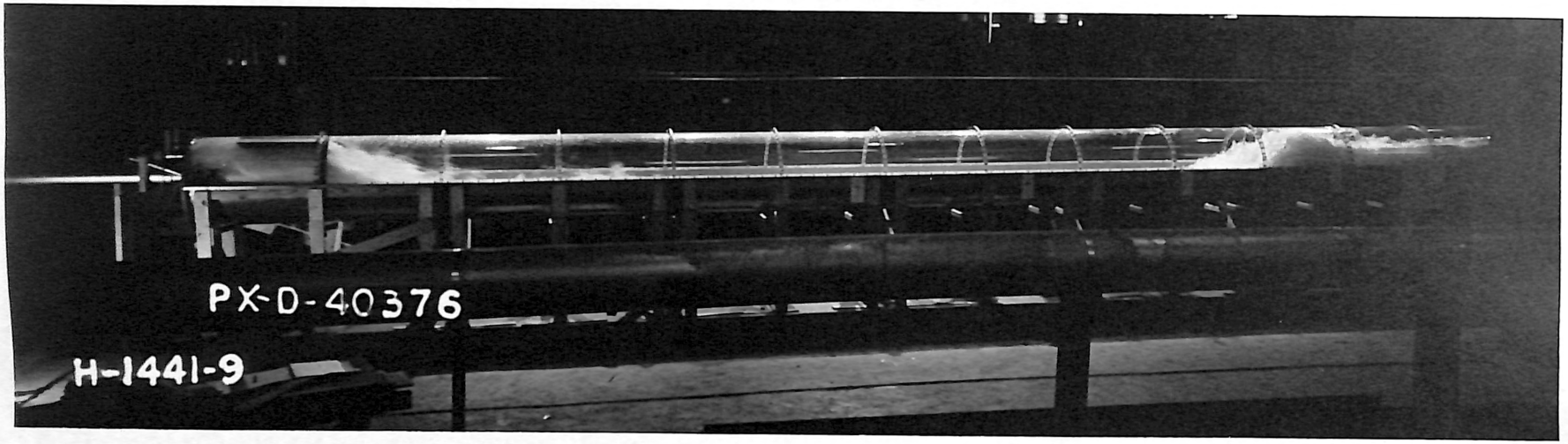

B. High velocity flow sweeps along the tunnel invert forming a violent hydraulic jump.
Q = 4400 cfs, H = 458 ft, both valves 100% opened.

OROVILLE DAM
RIVER OUTLET WORKS STUDIES

Overall view of model and flow in tunnel - Preliminary design
1:18 scale model

Figure 5
Report Hyd-508

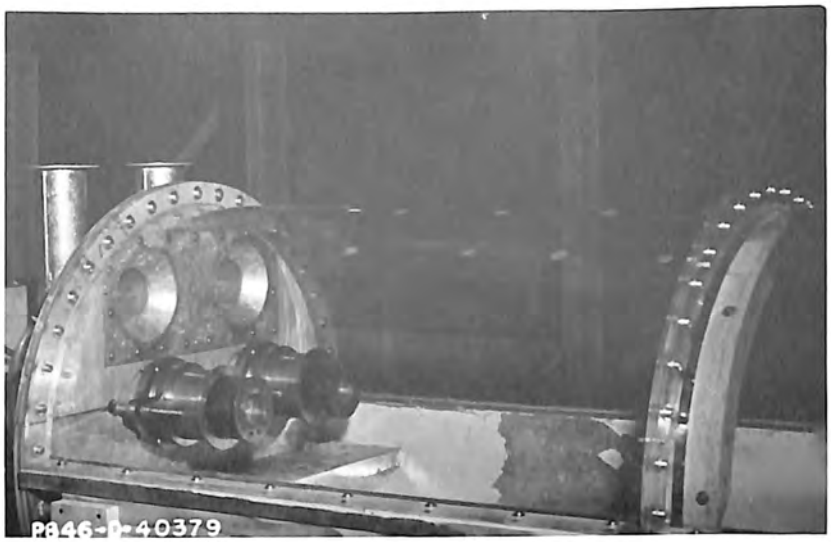

A. Splitter piers removed with half ring of preliminary design retained.

B. A check weir 540 ft downstream from the valves was used in initial tests to maintain a surge pool.

OROVILLE DAM
RIVER OUTLET WORKS STUDIES

Half ring on tunnel crown, and downstream check weir
1:18 scale model

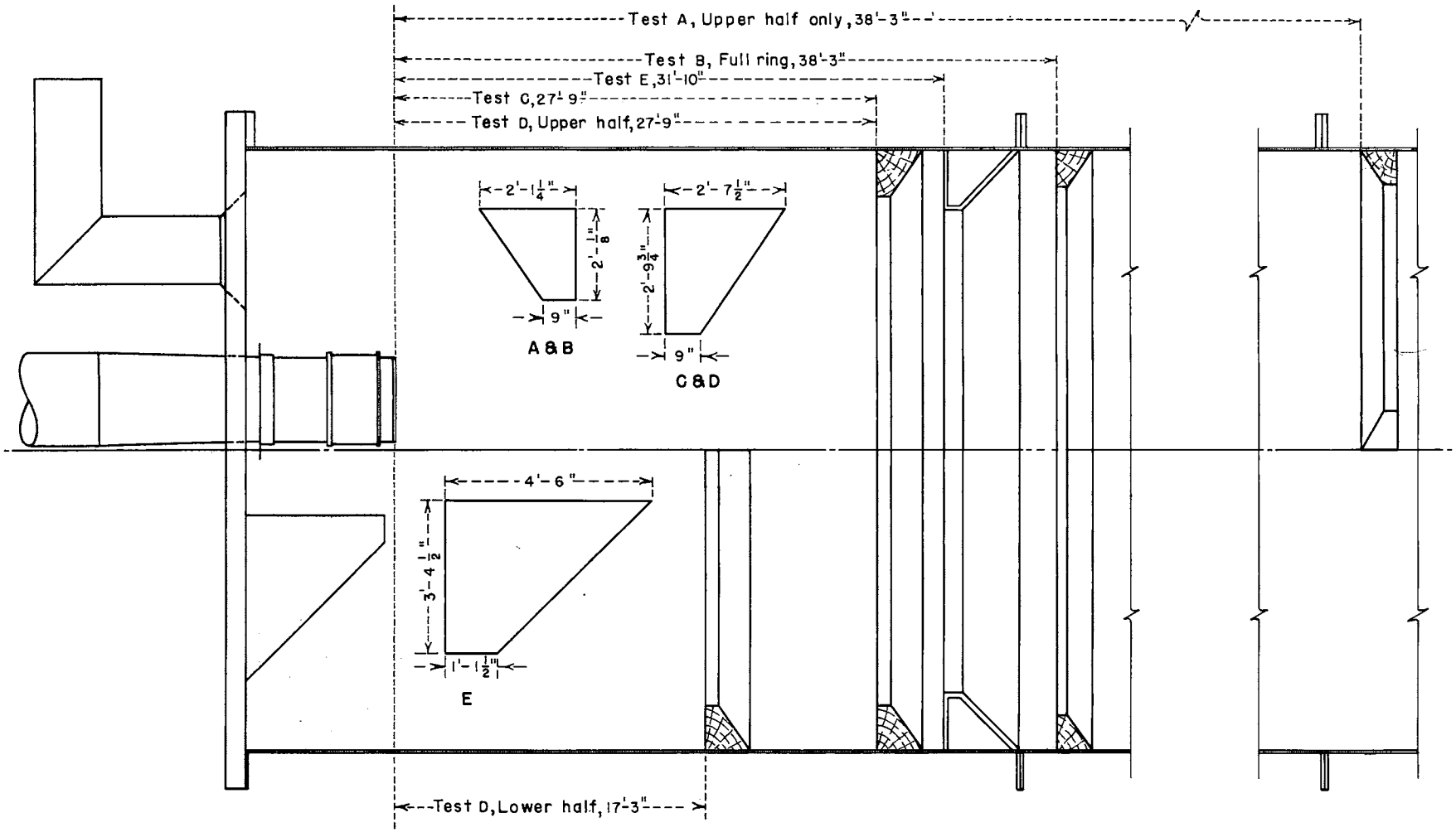

OROVILLE DAM

RIVER OUTLET WORKS STUDIES

VARIOUS HALF-AND FULL-DEFLECTOR RINGS STUDIED

1:18 SCALE MODEL

FIGURE 7
REPORT HYD. 508

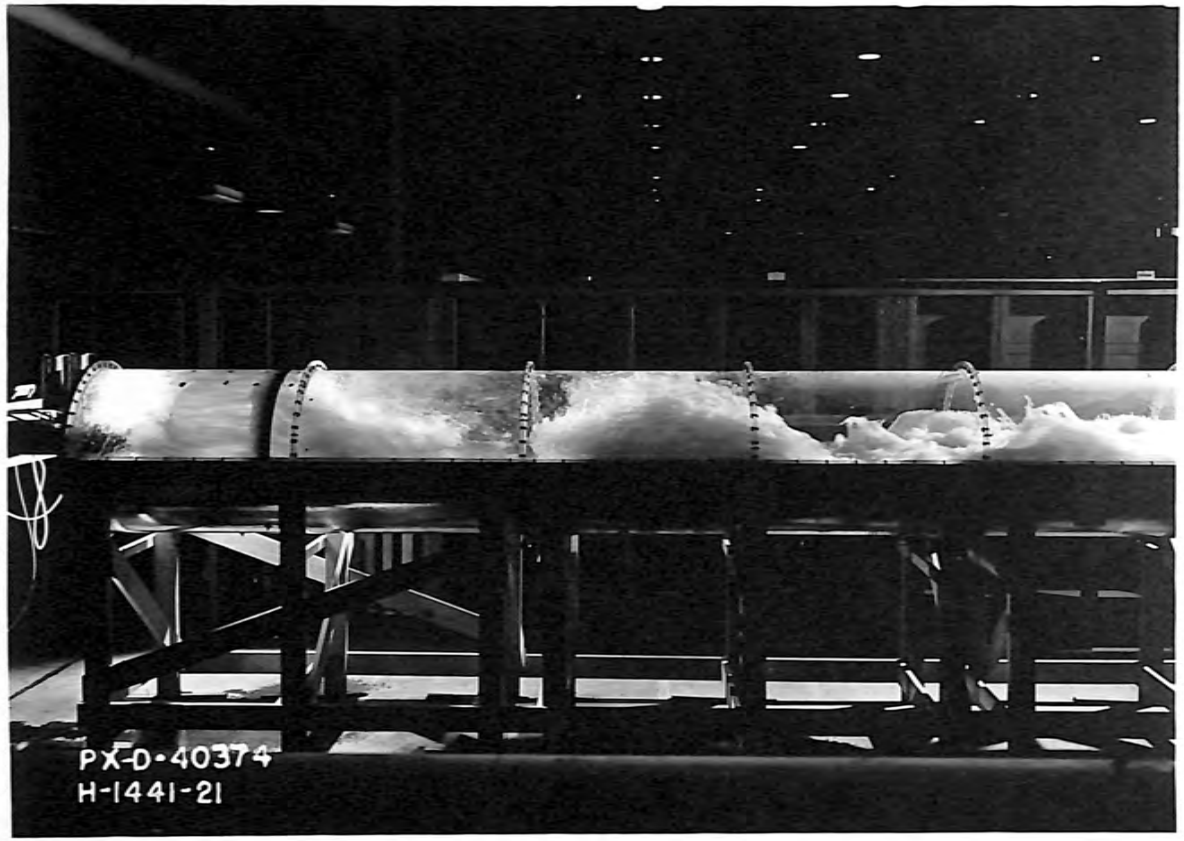

Better energy dissipation occurs with a full deflector ring 31' 10" downstream from the valves and an 8-foot high invert deflector plate 80 feet from the valves. A huge boil occurs 92 feet downstream from the valves. Q = 5400 cfs, H = 680 feet, both valves opened 100%.

OROVILLE DAM
RIVER OUTLET WORKS STUDIES

Flow with a full deflector ring and an 8 foot high invert deflector plate
1:18 scale model

Figure 8
Report Hyd-508

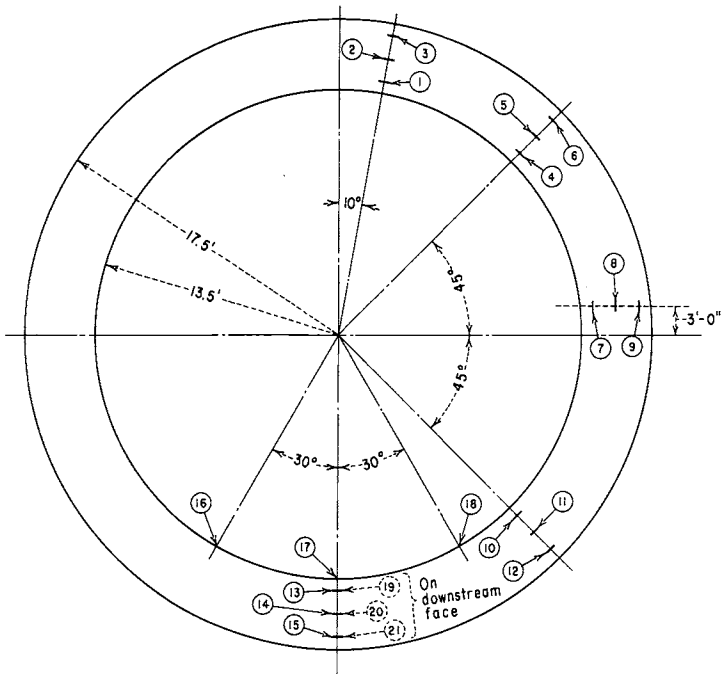

PIEZOMETER NUMBERS
AND LOCATIONS
LOOKING DOWNSTREAM

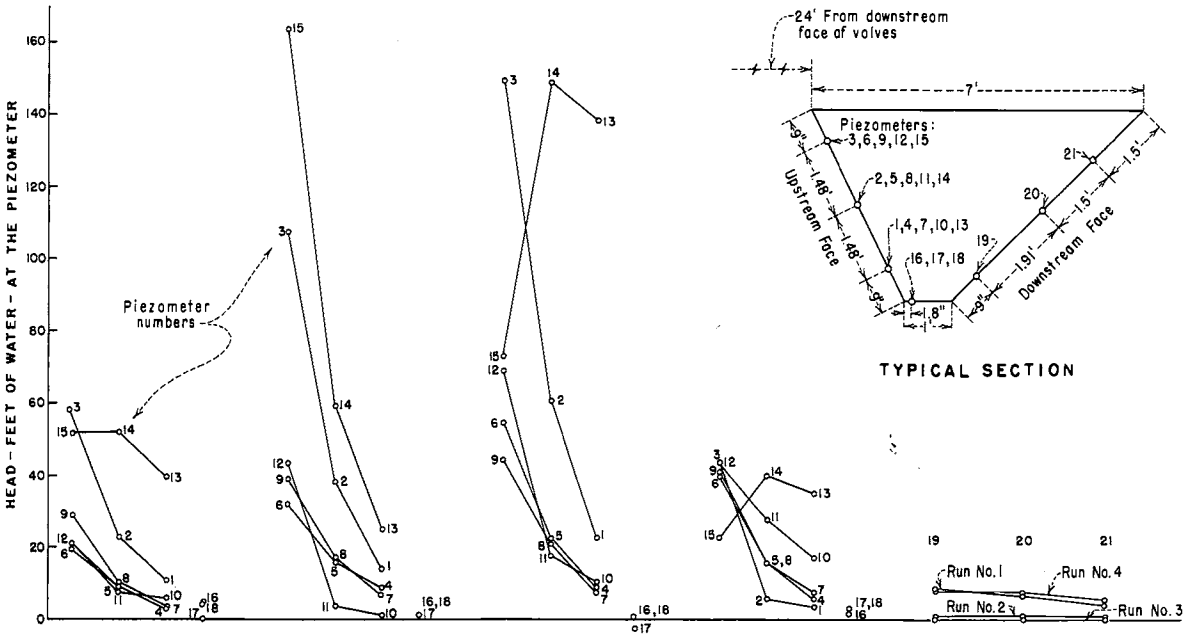

Run No. 1
Head = 320'
Discharge = 3700 cfs.
Left Valve Opening 100%
Right Valve Opening 100%

Run No. 2
Head = 680'
Discharge = 3700 cfs.
Left Valve Opening 53.8%
Right Valve Opening 53.8%

Run No. 3
Head = 680'
Discharge = 5400 cfs.
Left Valve Opening 100%
Right Valve Opening 100%

Run No. 4
Head = 680'
Discharge = 2700 cfs.
Left Valve Opening 0
Right Valve Opening 100%

OROVILLE DAM

RIVER OUTLET WORKS STUDIES

RECOMMENDED DEFLECTOR RING WITH PIEZOMETER LOCATIONS AND PRESSURES

DATA FROM 1:18 SCALE MODEL

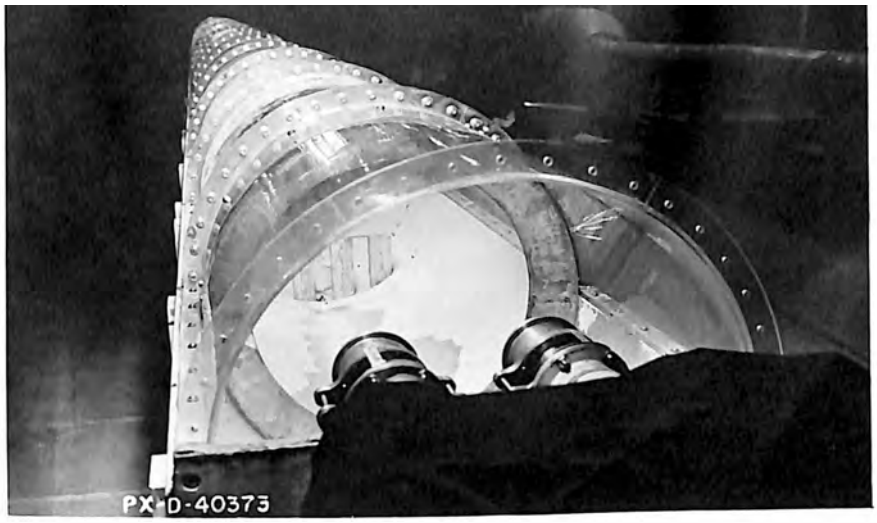

A. View looking downstream.

B. View looking upstream showing full ring and four floor piers.

OROVILLE DAM
RIVER OUTLET WORKS STUDIES

Recommended deflector ring 24 feet from valves and baffle piers 69 feet from valves
1:18 scale model

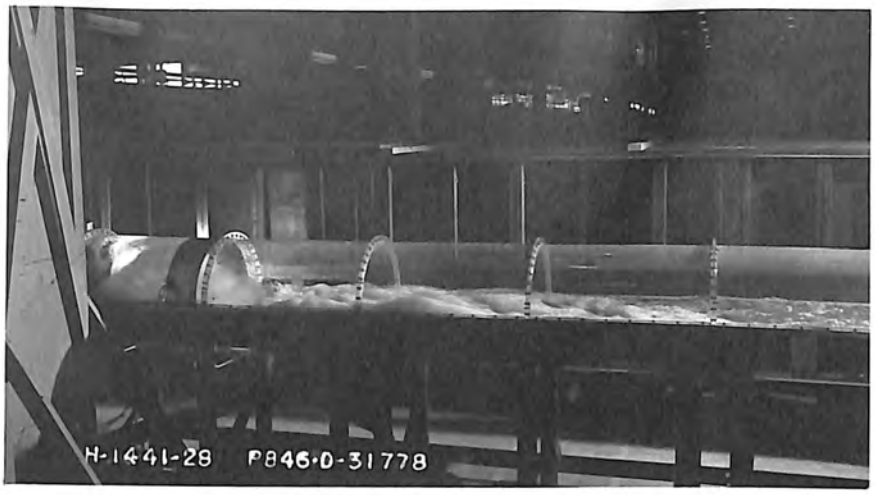

A. Smooth flow occurred at Unit No. 1 outlet ports with Q = 3700 cfs, H = 322 feet, both valves opened 100%, and depth = 17-1/2 feet.

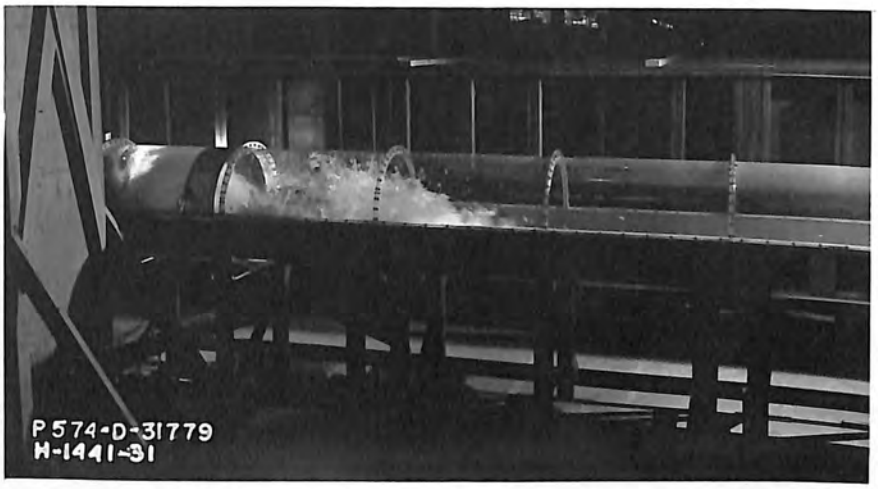

B. At higher flows the single set of baffle piers could not hold the flow and the pool swept out. Q = 5400 cfs, H = 680 feet, both valves opened 100%.

OROVILLE DAM
RIVER OUTLET WORKS STUDIES

Flow with recommended deflector ring and one set of baffle piers
1:18 scale model

A. 4 large piers
69 feet downstream
from the valves.

B. Small piers sloping
face upstream between
large piers.

C. Small piers vertical
face upstream between
large piers.

D. Small piers vertical
face upstream 12 feet
downstream.

OROVILLE DAM
RIVER OUTLET WORKS STUDIES

Small baffle piers
between large piers
1:18 scale model

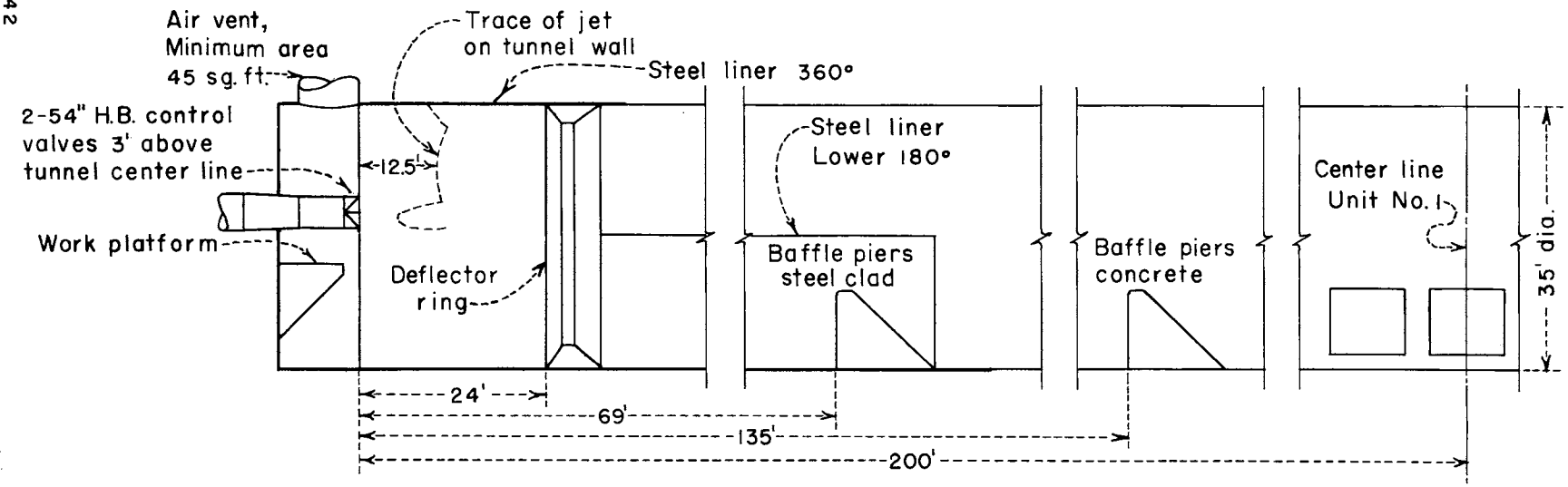

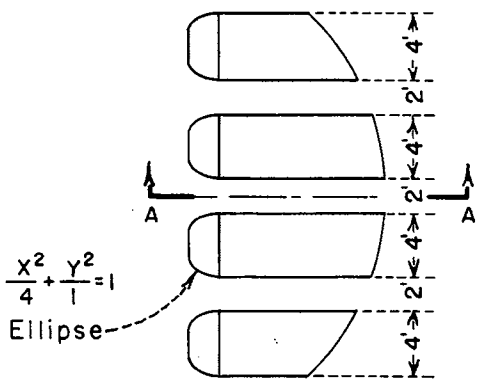

PLAN

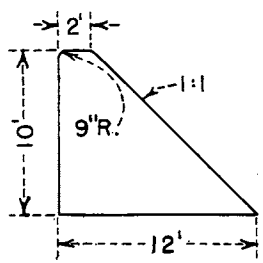

ELEVATION A-A

BAFFLE PIERS

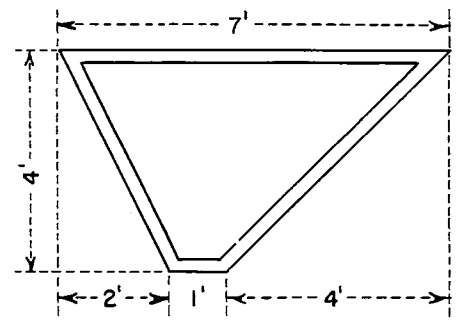

DEFLECTOR RING

OROVILLE DAM

RIVER OUTLET WORKS STUDIES

RECOMMENDED DESIGN

1:18 SCALE MODEL

FIGURE 13
REPORT HYD. 508

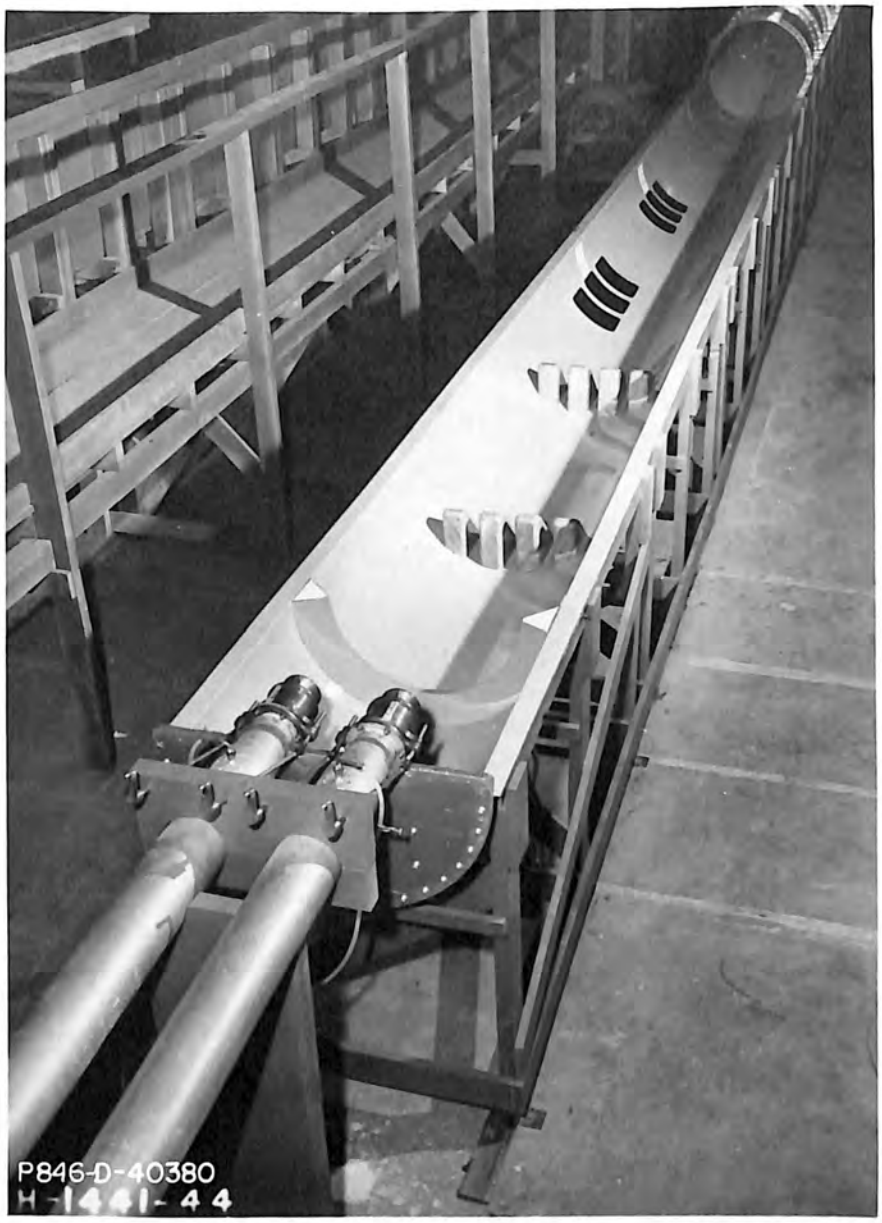

Upper half of tunnel removed to show deflector ring, two sets of baffle piers, and locations of draft tube openings from power units 1 and 2.

OROVILLE DAM
RIVER OUTLET WORKS STUDIES

Recommended design
1:18 scale model

A. Tranquil flow occurs at the draft tube portals with Q = 3700 cfs, H = 322 feet, both valves opened 100%, and depth = 17.5 feet.

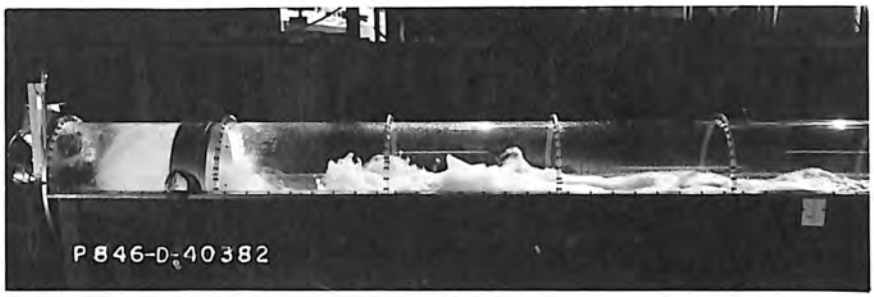

B. Safe flow conditions occur at maximum head. Q = 3700 cfs, H = 680 feet, both valves opened 53.4%, and depth = 17.5 feet.

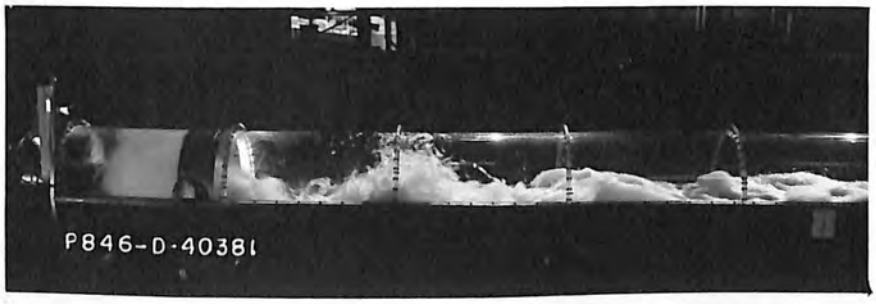

C. Rougher, but safe conditions occur at maximum discharge of 5400 cfs, H = 680 feet, both valves opened 100%, and depth = 19.0 feet.

OROVILLE DAM
RIVER OUTLET WORKS STUDIES

Flow conditions in recommended design
1:18 scale model

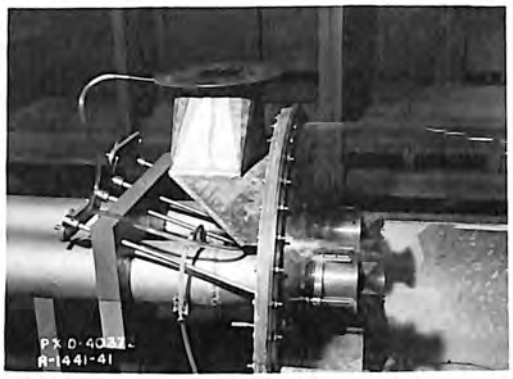

AIR INTAKE AND ORIFICE PLATE

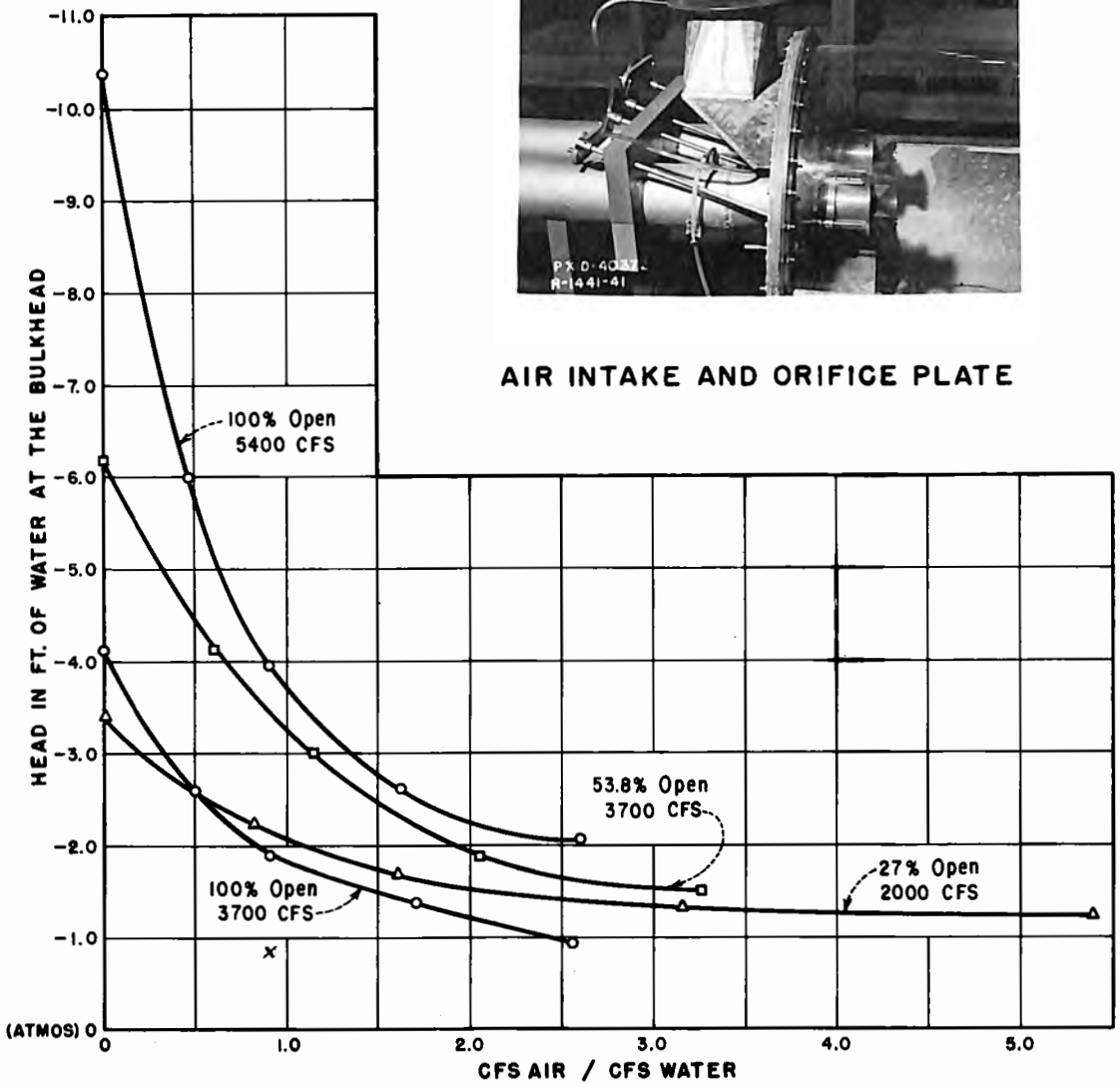

AIR DEMAND, BOTH VALVES OPENED

OROVILLE DAM
RIVER OUTLET WORKS STUDIES

Air demand with both valves opened
Recommended Design Data from 1:18 scale model

FIGURE 17
REPORT HYD. 508

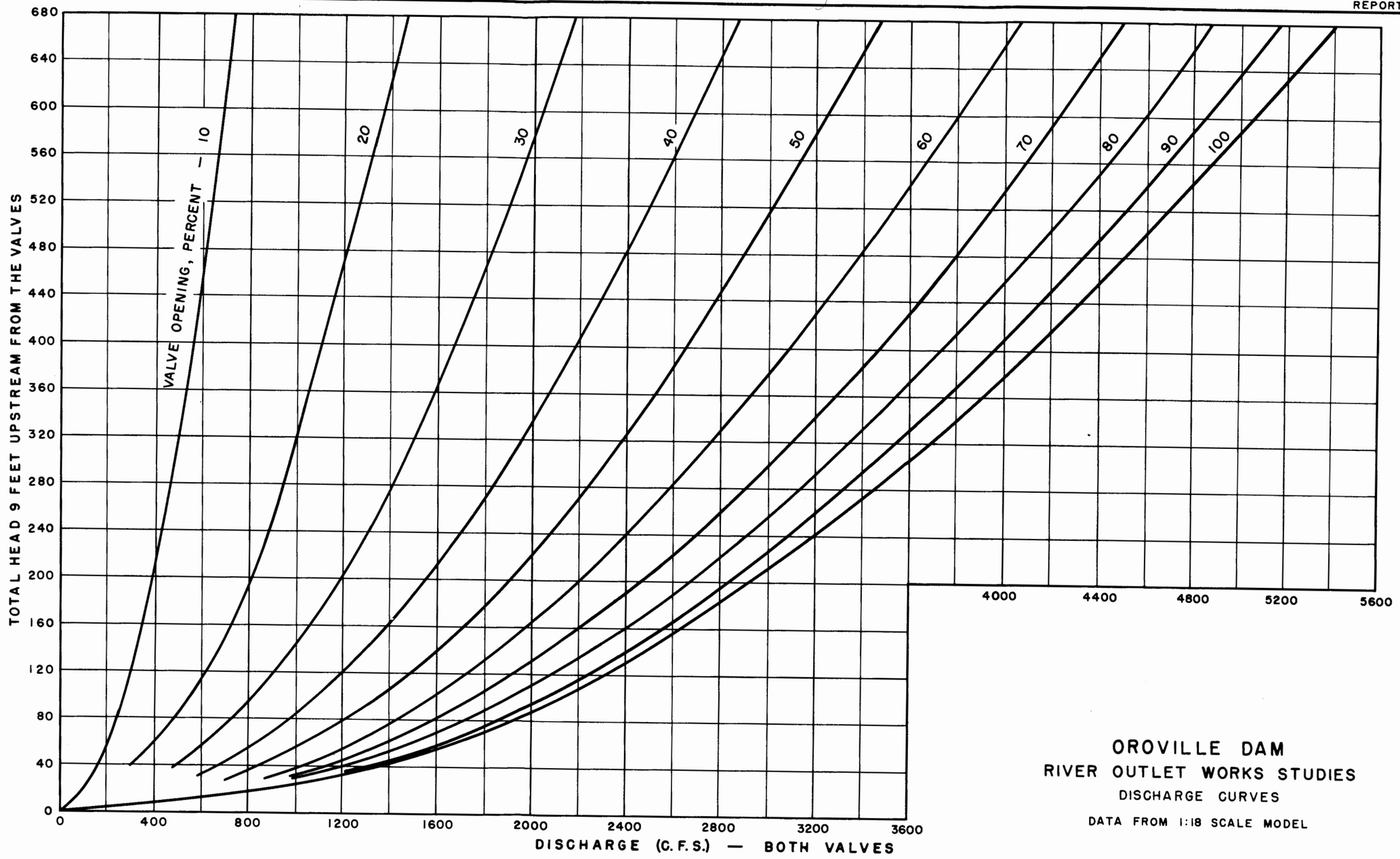

OROVILLE DAM
RIVER OUTLET WORKS STUDIES
DISCHARGE CURVES
DATA FROM 1:18 SCALE MODEL

642

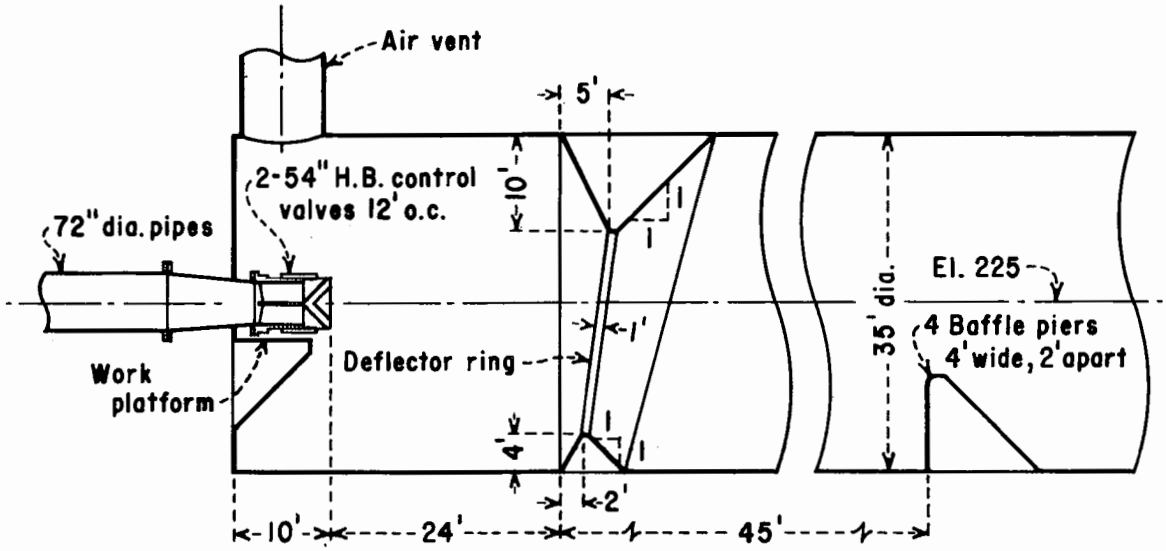

A. ECCENTRIC RING WITH 10 FOOT INWARD PROJECTION AT CROWN

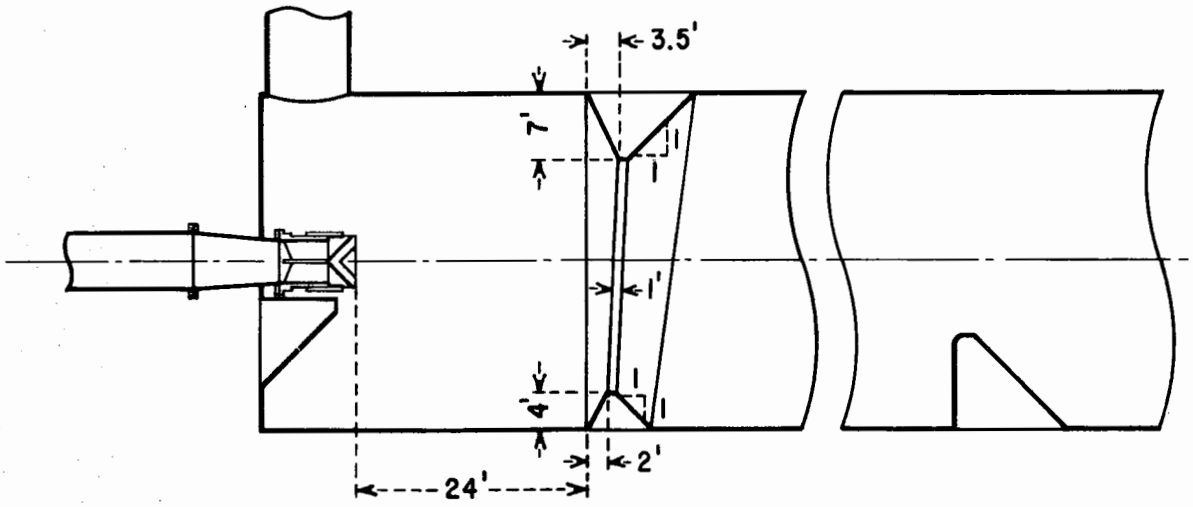

B. ECCENTRIC RING WITH 7 FOOT INWARD PROJECTION AT CROWN

OROVILLE DAM

RIVER OUTLET WORKS STUDIES

ECCENTRIC DEFLECTOR RINGS TESTED WITH VALVES AT TUNNEL CENTERLINE, (ELEVATION 225)

1:18 SCALE MODEL

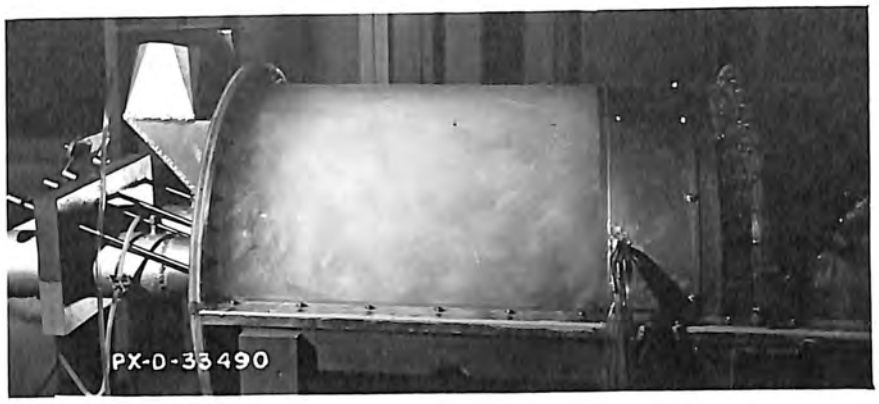

A. 10 foot top and 4 foot botton eccentric ring, no air admitted, Q = 5400 cfs. Note full tunnel upstream from ring.

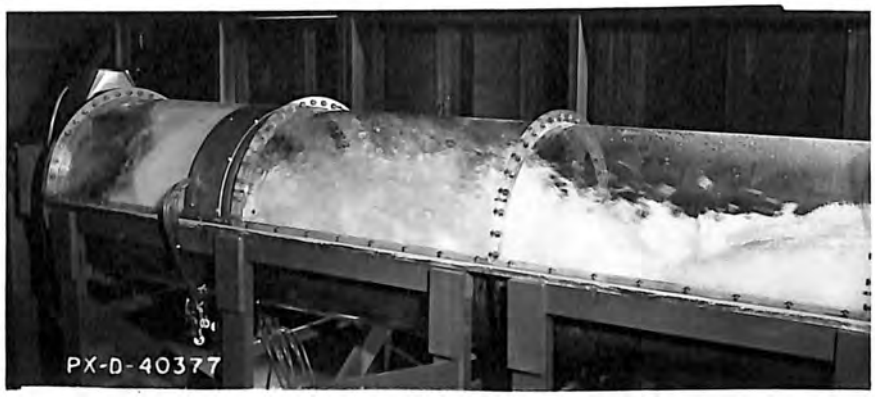

B. 10 foot top and 4 foot bottom eccentric ring, air vent opened, Q = 5400 cfs, both valves opened 100%. Air demand was excessive and flow conditions were extremely rough.

C. 7 foot top and 4 foot bottom eccentric ring, air vent opened, Q = 5400 cfs, both valves opened 100%. Air demand was excessive and flow conditions were extremely rough.

OROVILLE DAM
RIVER OUTLET WORKS STUDIES

Flow with valves at tunnel centerline (Elevation 225)
1:18 scale model