HYD-343

W. Price ✓

UNITED STATES
DEPARTMENT OF THE INTERIOR
BUREAU OF RECLAMATION

HYDRAULIC MODEL STUDIES FOR THE REHABILITATION OF THE SPILLWAY CHANNEL TIETON DAM--YAKIMA PROJECT, WASHINGTON

343

Laboratory Report No. Hyd-343

ENGINEERING LABORATORIES BRANCH

DESIGN AND CONSTRUCTION DIVISION
DENVER, COLORADO

July 18, 1952

CONTENTS

UNITED STATES
DEPARTMENT OF THE INTERIOR
BUREAU OF RECLAMATION

Design and Construction Division
Engineering Laboratories Branch
Denver, Colorado
July 18, 1952

Laboratory Report No. Hyd-343
Hydraulic Laboratory Section
Written by: D. Colgate
Checked and Reviewed by: J. W. Ball

Subject: Hydraulic model studies for the rehabilitation of the spillway channel--Tieton Dam--Yakima Project, Washington.

PURPOSE

To evolve a self-sustaining exit structure at the end of the spillway chute.

CONCLUSIONS

1. A chute exit structure with the left wall warped from 1/2:1 to vertical, then extended and curved to the right (Figures 11 and 13-A) turns the flow to the right in a fin-like stream adjacent to the left wall. The shape of this exit structure conforms roughly to the exposed rock on the floor and walls of the channel. The hillside downstream from the exit structure would undoubtedly be damaged by floods of more than about 6,000 cubic feet per second, but the chute extension will be self-sustaining for discharges including about 30,000 cfs.

2. The flow in the spillway chute will be reasonably uniform for all discharges. (Maximum test Q = 33,200 cfs.)

3. The capacity of the spillway chute is 39,200 cfs. This flow overtops the side walls at Station 12+44.50 (Figure 12).

4. The discharge curves for a single gate (Figure 6) represent the test results with the drum gates down, and computed discharges for the raised gate positions.

5. In the preliminary design of the exit structure (Figures 4-B and 7) a return eddy in the right side of the bend interferes with the formation of an efficient hydraulic jump and creates an unsatisfactory flow condition for discharges greater than about 3,000 cfs.

6. An exit structure with the left wall curved to the right and warped from the existing 1/2:1 slope at the beginning of the curve to vertical at the downstream end (Figures 8-B and 9) operated unsatisfactorily because it: (a) failed to adequately turn the flow and (b) formed an excessively high fin of water at the left wall.

RECOMMENDATIONS

1. Construct the spillway chute exit structure as shown in Figures 11 and 13-A.

2. Stabilize the natural rock on the right or east side for about 40 feet downstream from the existing right wall.

INTRODUCTION

Tieton Dam (Figure 1-A) is located on the Tieton River 30 miles west of Yakima, Washington. Construction was started in 1917, discontinued because of World War I, resumed in 1921, and completed in April 1925. The structure is a 321-foot-high, earth-fill dam with a concrete core wall. At the time of completion it was the world's highest earth-fill dam. The outlet tunnel is 2,120 feet long with two 5- by 6-foot slide gates for emergency, and two 60-inch and one 24-inch balance needle valves for control. The side channel spillway is on the left or west end of the dam with the axis of the crest approximately at right angles to the axis of the dam. The crest is controlled with six 65- by 8-foot drum gates (Figure 1-B). The side channel and spillway chute are cut into solid rock and lined with concrete (Figure 2-A).

The spillway chute terminated in an area of fractured and loose rock. The pressure of the boulders in back of the left wall, and the action of the water from within, fractured the structure, and by 1928 the portion downstream from Station 12+44.50 was severely damaged (Figure 2-B). Hydraulic action continued to tear away the downstream end of the spillway chute (Figure 3-A) and eroded such a large portion of the hillside that Washington State Highway No. 5 between Yakima and White Pass was endangered (Figure 3-B). The largest recorded discharge was 8,450 cfs, but the structure was originally intended to handle up to about 50,000 cfs.

The hydraulic model study discussed in this report was made to determine the nature and extent of a self-sustaining spillway chute exit structure which would turn the flow away from the hillside.

THE INVESTIGATION*

The Model

A 1:42 scale model of the Tieton Dam side channel spillway was built in the Hydraulic Laboratory (Figure 4-A). The model included the crest (less drum gates), the side channel, and the spillway chute to Station 12+44.50. Provisions were made for easy replacement or revision of all construction downstream from this station.

*All distances, discharges, and velocities are for the prototype unless otherwise stated.

The crest, side channel, and chute were made of concrete, shaped to sheet metal templates. The 7 piers were of wood, oil-treated to prevent warping or splitting. A concrete slope was constructed in the head box to represent the upstream face of the dam. A rock baffle 6 inches thick stilled the water from the laboratory pumps to form a tranquil pool representing the reservoir. The tail box was constructed sufficiently wide to include the stilling pool formed by the outlet valves, and long enough to include the junction of the spillway channel and the river.

The model differed from the prototype in that it did not include the opening at the upstream end of the side channel (Figure 5). This opening has a sill at elevation 2926, the elevation of the top of the raised drum gates.

Discharge was measured with the laboratory venturi meters; the reservoir and tail-water elevations, and the water-surface profiles in the channel, were measured with point gages; and the water velocity in the channel was determined with a single-leg Pitot tube.

Spillway Calibration

The discharge was determined for the spillway with the drum gates down and reservoir elevations to 8.23 feet above the crest. The curve on Figure 5-C shows the spillway discharge as determined by the model tests for reservoir elevations to 2926, and the computed combined discharge for the spillway and the opening at the upstream end of the channel for reservoir elevations between 2926 and 2930.

The chart on Figure 6 shows the computed discharge for one gate for various drum gate positions and reservoir elevations.

Spillway Channel and Chute

The flow conditions in the side channel and upper spillway chute for a discharge of 11,500 cfs is shown on Figure 4-A. The pattern shown is typical for all tested discharges; no adverse flow conditions were encountered in the channel or in the chute above Station 12+44.50 during the test program.

At Station 12+44.50 the stream had very satisfactory velocity distribution and traveled about 100 fps. The maximum capacity of the channel at this station is 39,200 cfs. Figure 12 shows the velocity distribution for 30,000 cfs and the water stage for various discharges.

Preliminary Design Chute Exit Structure (Design No. 1)

The preliminary design chute exit structure for turning the water away from the hillside into the riverbed is shown on Figures 4-B and 7.

The tail box downstream from the exit did not include the terrain and the river channel, but the tail water was maintained at the desired level by the tail box gates.

There was a turn of 41 degrees from the chute to the river channel; however, the flow had a tendency to continue on in line with the chute and actually turned very slightly. For a discharge of 10,000 cfs the flow turned about 10 degrees (Figure 8-A).

An eddy swept back into the structure from the right side at all combinations of flow and tail-water elevations. Gravel, deposited downstream from the right wall, was swept back into the lined portion of the structure, entered the high-velocity stream, and was dashed against the curved left wall, or bounced along the floor and out into the river channel. The eddy interfered with the formation of an efficient hydraulic jump. This action rendered the design unsatisfactory.

Construction and further bedrock investigations were made in the field concurrently with the model tests. After the initial model tests were made on Design No. 1, and before measures could be taken to correct the unsatisfactory flow conditions, it was disclosed that the rock outcrop about 100 feet upstream from the end of the left wall of Design No. 1 was of a better quality than previous cursory examination had indicated. If the structures were made shorter and allowed to curve at, and be anchored to, this outcrop, a substantial saving in excavation and concrete would be realized. Because of these new dimension possibilities, the model tests on Design No. 1 were discontinued.

Chute Exit Structure Design No. 2

The new chute exit structure was radically different from Design No. 1 in both shape and operational characteristics (Figure 9-A); it was shorter by about 100 feet and was designed to deflect the stream into the riverbed without forming a hydraulic jump. It was thought that, if turned far enough to the right, the high-velocity flow would scour a stilling pool similar to the one which was formed by the jets from the outlet valves (Figure 3-B), and in an area where the scour would not endanger any installation.

This design failed to turn the stream more than 2 or 3 degrees and produced an exceedingly high fin which impinged in an area of loose rock and gravel dangerously close to Washington State Highway No. 5.

Chute Exit Structure Design No. 3

Design No. 2 was modified as shown in Figure 9-B, and designated Design No. 3. The left wall was curved to the right, terminating at the chute center line (extended), and was warped from a 1/2:1 slope at the beginning of the curve to vertical at the downstream end (Figure 8-B). The floor was curved sharply upward to give the effect of superelevation.

The flow was very similar to that from Design No. 2; the stream turned about 7 degrees and the fin of water was quite high (Figure 10).

It appeared that the warp on the horizontal curve of the left wall tended to direct the stream upward, and did not properly turn the flow.

Chute Exit Structure Design No. 4

In Design No. 4 the left wall was warped from a 1/2:1 slope to vertical, with the intersection of the wall and floor parallel to the chute center line; the vertical wall was then curved to the right and terminated at a point approximately in line with the intersection of the right wall and chute floor (Figure 11).

This design operated about as desired. At a discharge of 30,000 cfs the stream was turned to the right 22-1/2 degrees, and the fin was not excessively high.

The design seemed to fulfill the requirements for turning the flow and to fit the known or assumed bedrock contours and other terrain features; however, prototype repairs--started prior to the construction of the model--were progressing rapidly, and the requirements were being changed almost daily. As the tests on Design No. 4 were being made, information was received from the project that the new floor had been placed to Station 13+20.6, but excavation in the area of the toe of the proposed chute outlet had uncovered bedrock about 9 feet lower than anticipated. It was desired to have the toe of the chute outlet on, or in, bedrock to minimize the possibility of undercutting the floor slab or of excessive scour immediately downstream.

Chute Exit Structure Design No. 5 (Recommended Design)

Necessary model changes were made to the floor of Design No. 4 to conform with the completed prototype construction and to key the toe of the chute into bedrock. The walls of the chute were not changed. This shape was designated Design No. 5, or the recommended design (Figure 11).

In the following description, all stations are on the continuation of the original chute center line. Station 12+44.50 is the upstream end of the new exit structure.

The floor slab, starting at Station 12+44.50, continued on the original chute slope of 0.233 for 2.30 feet; then followed the vertical curve R = 400 feet to Station 13+20.60; then the slope 0.0424 to Station 13+95.00; and finally the vertical curve R = 115.85 feet to Station 14+13.72.

The left wall had a 1/2:1 slope at Station 12+44.50, was warped to vertical at Station 13+35.50, and followed the horizontal curve R = 230 feet to Station 14+13.72. The intersection of the warped wall and

the chute floor was parallel to the chute center line. The top of the wall was at elevation 2725 between Stations 12+44.50 and 13+35.50, and sloped up to elevation 2737.50 at Station 14+13.72.

The existing right wall was tied into the floor of the exit structure and the wall slope of 1/2:1 maintained. The rock and gravel bank downstream was cut back to keep a minimum floor width of 15 feet (Figure 13-A).

The action of the water in the chute extension was similar for all discharges. The flow was disturbed very little by the warped portion of the left wall, but tended to form a "fin" against the curved portion. The water surface at various stations in the new construction is shown on Figure 12.

Discharges up to about 4,000 cfs spread out on the exposed bedrock downstream from the toe of the chute outlet and flowed into the river channel in such a manner that the left bank would not be scoured (Figure 13-B). In the model the bank downstream from the concrete right wall was stabilized to prevent scour since, at large discharges, the high velocity stream contacted this area. At these larger discharges the jet from the left wall impinged far enough downstream from the toe of the chute to be damaging to the rock and gravel left bank. The extent of such scour was not studied; however, a flow of 9,200 cfs (Figure 14-A) would undoubtedly move a large amount of material from the left bank, necessitating that repair work be done in the immediate area. The largest recorded discharge was 8,450 cfs in December 1933. A flood of 30,000 cfs (Figure 14-B) would erode the river channel severely and be disastrous to buildings along the banks downstream.

Interior - Reclamation - Denver, Colo.

A. Tieton Dam--1925

B. Side Channel Spillway--1925

TIETON DAM--SPILLWAY REHABILITATION
DAM AND SPILLWAY

A. Spillway Chute and Exit Structure--1925

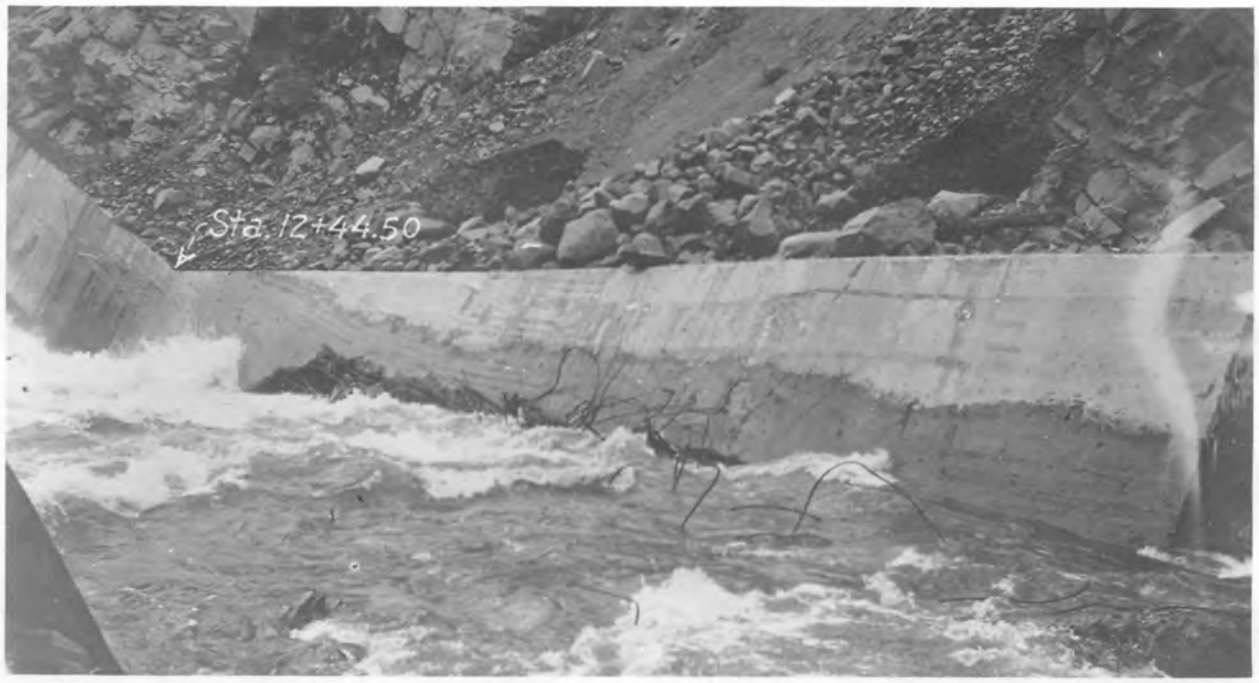

B. Original exit structure showing deteriorated condition June 2, 1928. Note loose ends of reinforcing steel. Q = 450 cfs (approximately).

TIETON DAM--SPILLWAY REHABILITATION
SPILLWAY EXIT STRUCTURE

A. Looking downstream at end of chute. Note absence of left wall below Station 12+44.50.

B. General view showing outlets and stilling pool, spillway chute, eroded left bank, cribbing, and imperiled Washington State Highway No. 5.

TIETON DAM--SPILLWAY REHABILITATION
SPILLWAY CHUTE, OUTLETS AND DOWNSTREAM CHANNELS

A. Side channel spillway, crest and piers. Q = 11,500 cfs.

B. Preliminary Design chute exit structure. (Design No. 1)

TIETON DAM SPILLWAY REHABILITATION
1:42 MODEL SPILLWAY

FIGURE 4
HYD-343

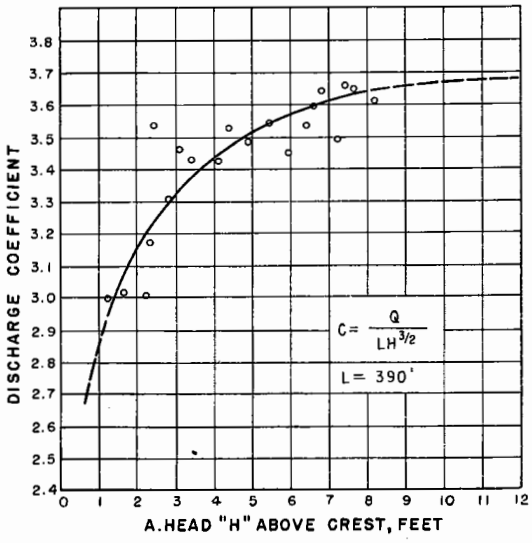

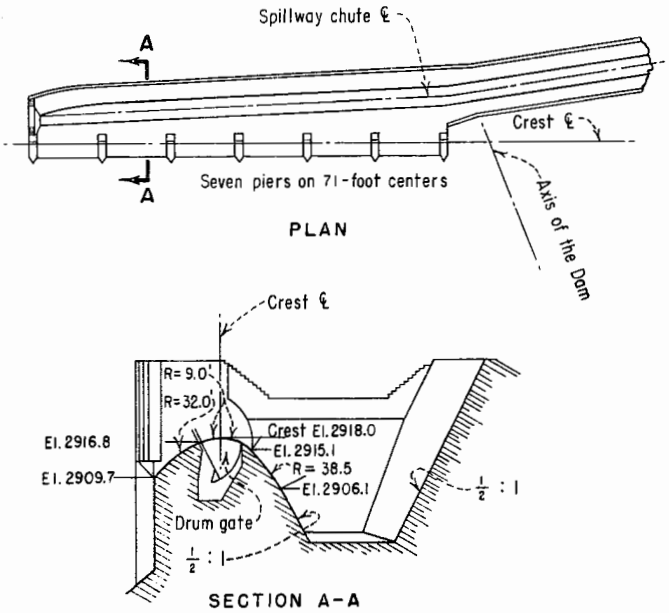

B. SPILLWAY ; GENERAL PLAN, TYPICAL SECTION

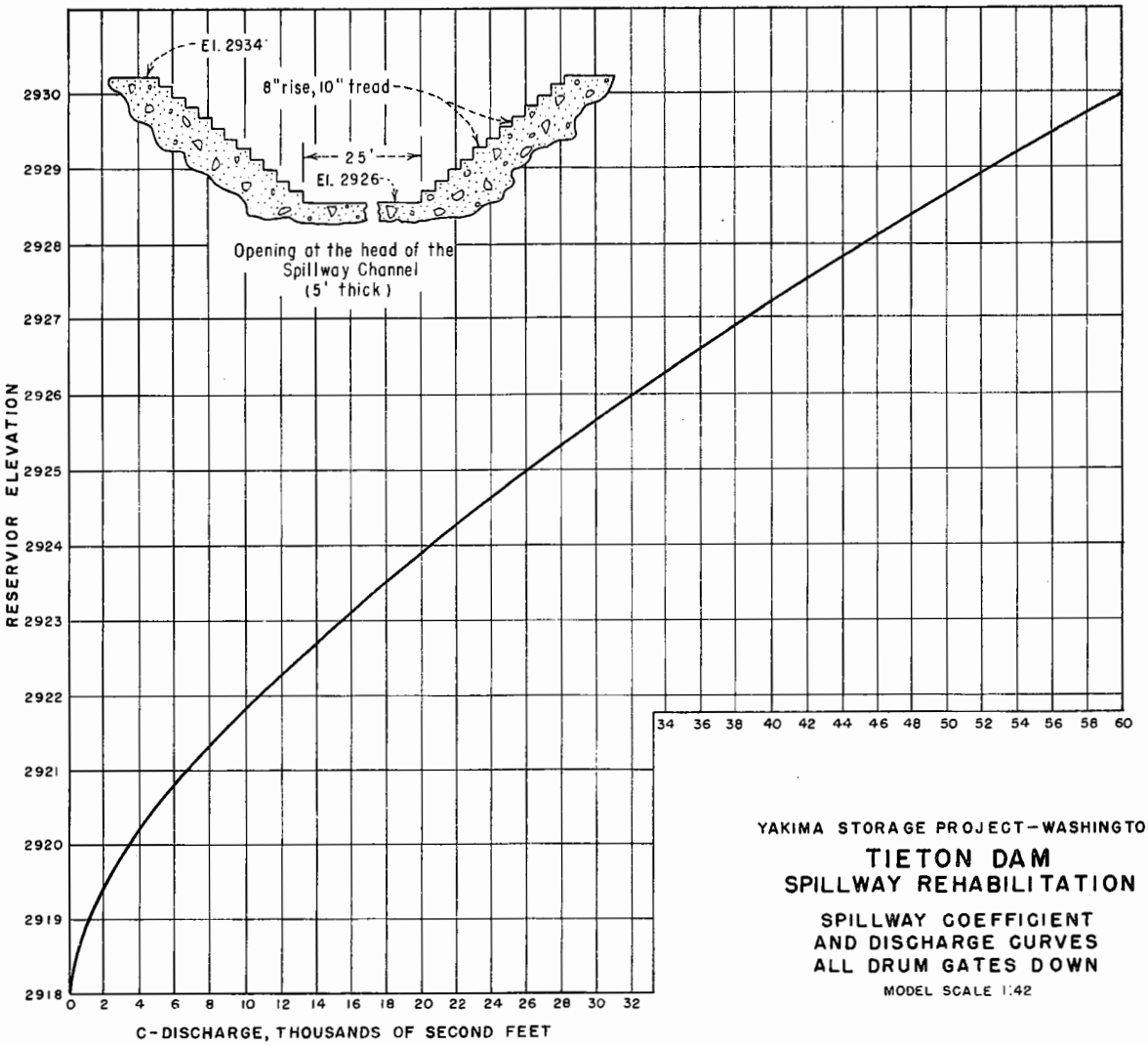

YAKIMA STORAGE PROJECT—WASHINGTON

TIETON DAM
SPILLWAY REHABILITATION

SPILLWAY COEFFICIENT
AND DISCHARGE CURVES
ALL DRUM GATES DOWN

MODEL SCALE 1:42

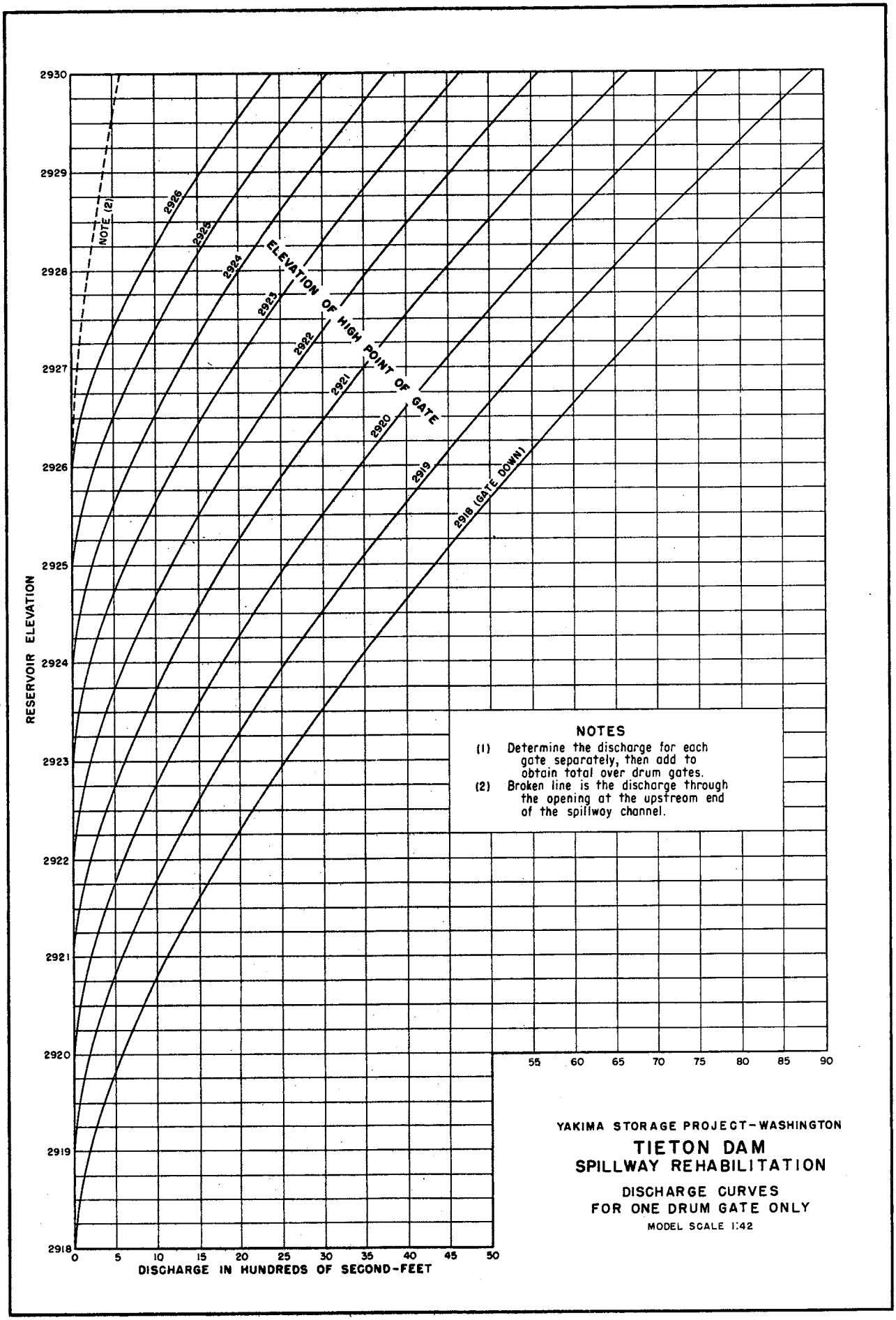

YAKIMA STORAGE PROJECT-WASHINGTON

TIETON DAM
SPILLWAY REHABILITATION

DISCHARGE CURVES
FOR ONE DRUM GATE ONLY

MODEL SCALE 1:42

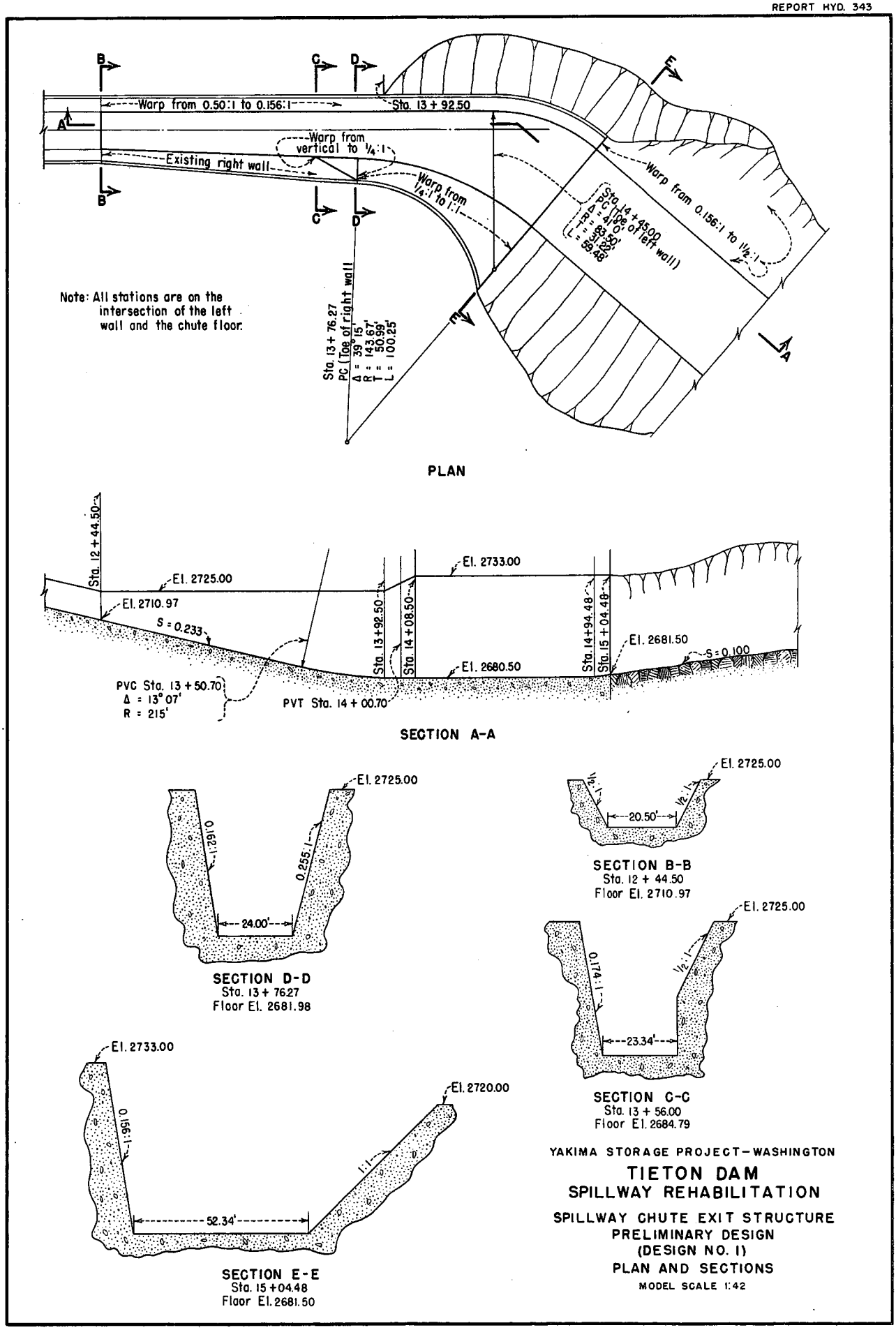

YAKIMA STORAGE PROJECT—WASHINGTON

TIETON DAM

SPILLWAY REHABILITATION

SPILLWAY CHUTE EXIT STRUCTURE
PRELIMINARY DESIGN
(DESIGN NO. 1)
PLAN AND SECTIONS

MODEL SCALE 1:42

Design No. 1. Q = 10,000 cfs.

B. Design No. 3. Q = 4,100 cfs.

TIETON DAM SPILLWAY REHABILITATION
1:42 MODEL SPILLWAY EXIT STRUCTURE,
DESIGNS 1 AND 3

FIGURE 8
HYD-343

FIGURE 9
REPORT HYD. 343

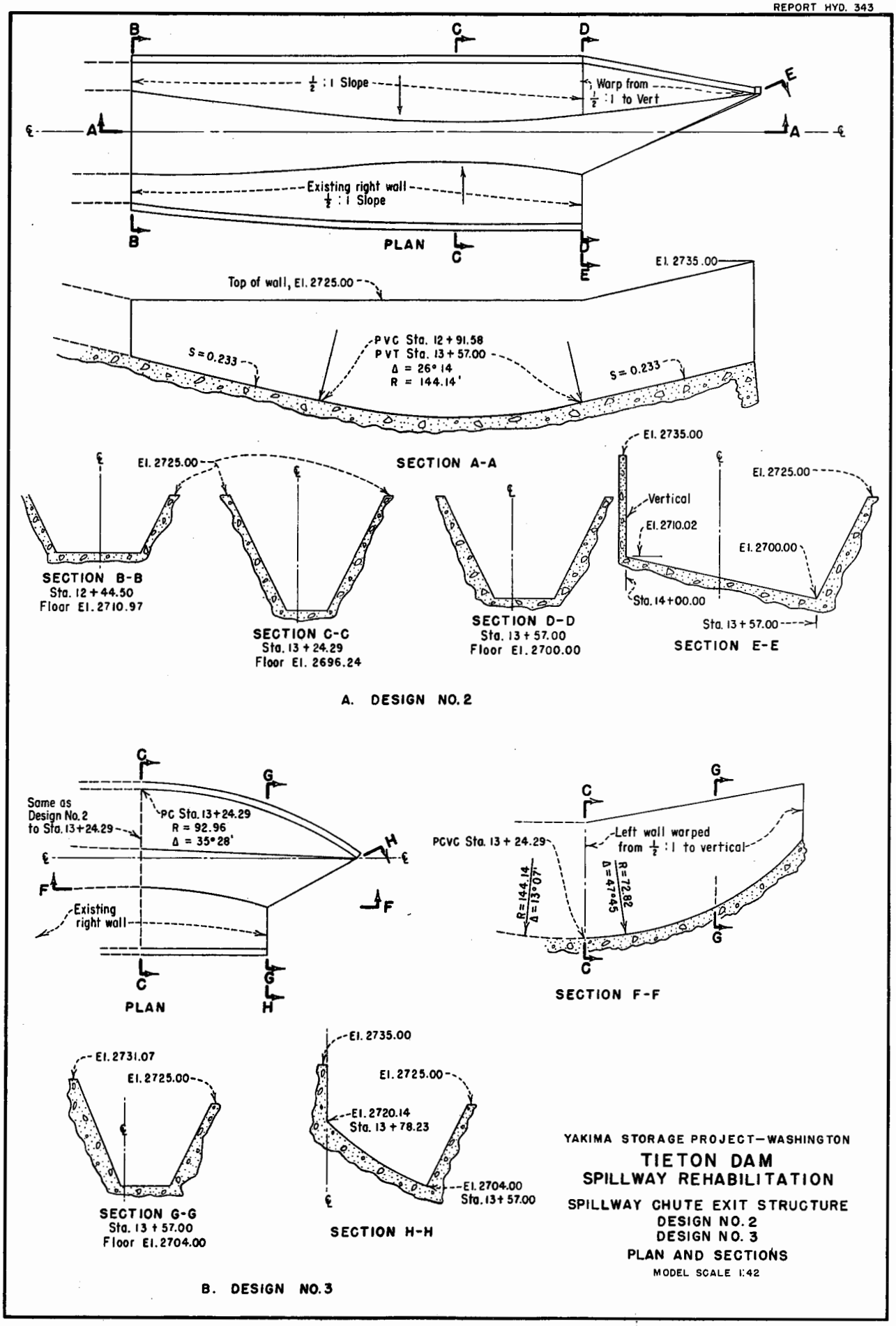

YAKIMA STORAGE PROJECT—WASHINGTON

TIETON DAM
SPILLWAY REHABILITATION

SPILLWAY CHUTE EXIT STRUCTURE
DESIGN NO. 2
DESIGN NO. 3
PLAN AND SECTIONS
MODEL SCALE 1:42

A. Looking Downstream. Q = 10, 400 cfs.

B. Side View. Q = 10, 400 cfs.

TIETON DAM SPILLWAY REHABILITATION
1:42 MODEL SPILLWAY EXIT STRUCTURE
DESIGN 3

FIGURE 10
HYD-343

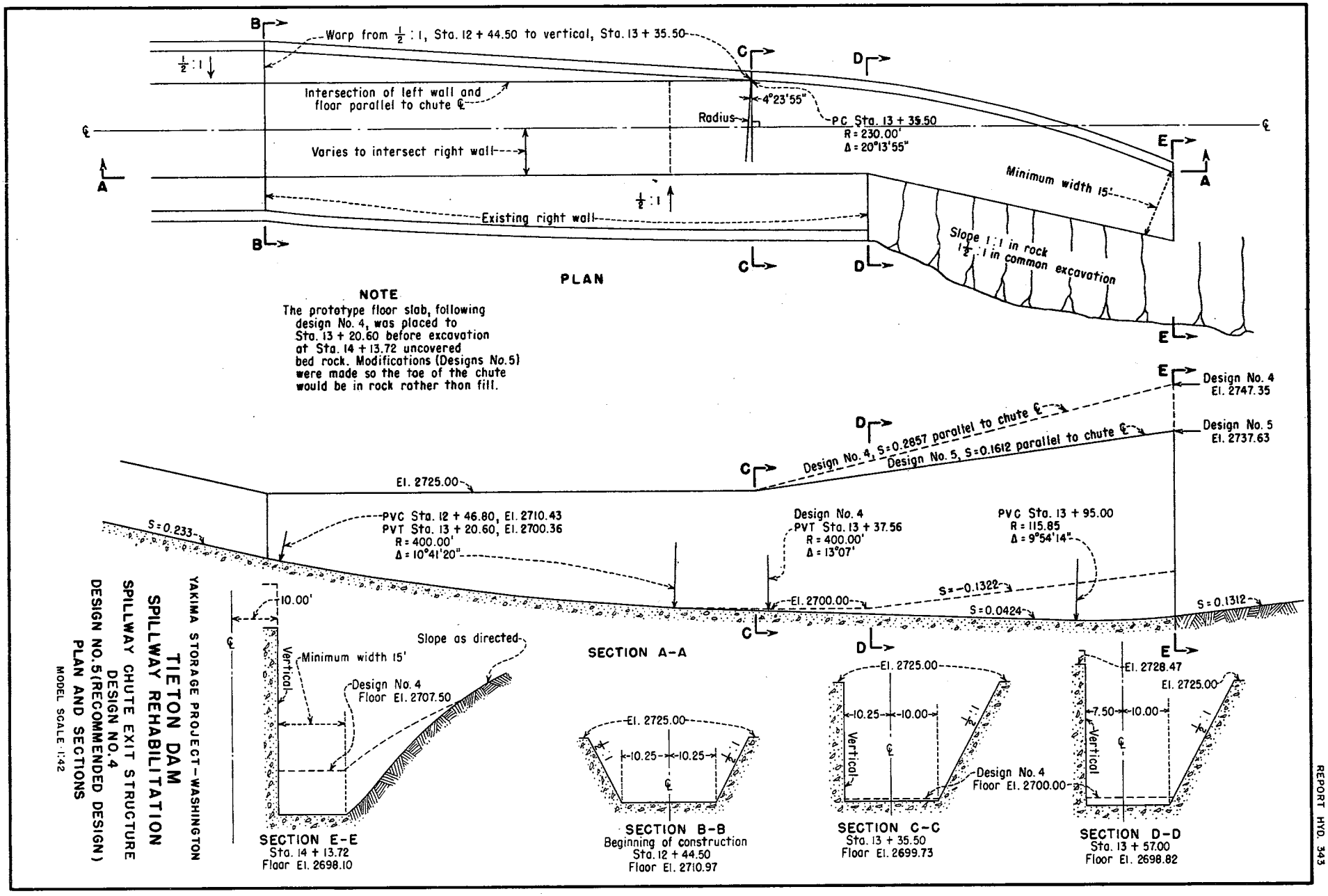

FIGURE 11
REPORT HYD. 343

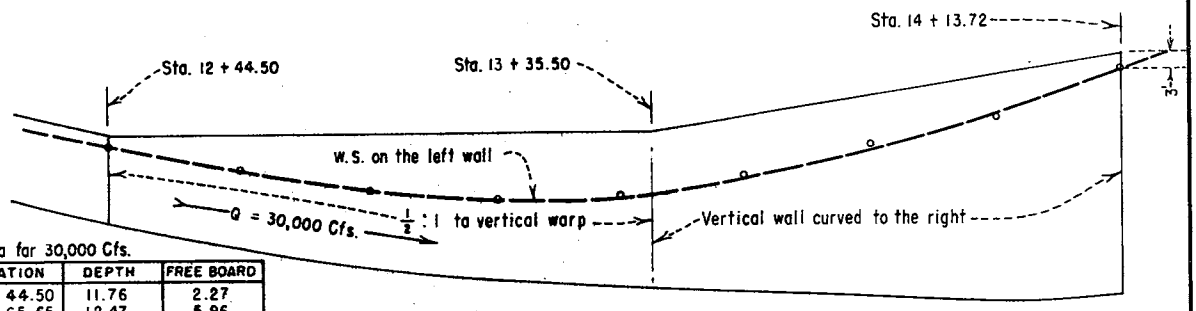

Data for 30,000 Cfs.

STATION	DEPTH	FREE BOARD
12 + 44.50	11.76	2.27
12 + 65.65	12.47	5.96
12 + 86.81	12.47	9.41
13 + 07.96	13.14	9.57
13 + 29.11	14.79	10.01
13 + 50.26	18.44	10.13
13 + 71.42	24.48	8.10
13 + 92.57	29.40	7.48
14 + 13.72	36.53	3.00

SIDE ELEVATION, LEFT WALL

Velocity profile table for 30,000 cfs, Sta. 12 + 44.50

HORIZONTAL STATION	VERTICAL STATION A	B	C
1	97.3	97.0	—
2	100.5	100.4	96.2
3	101.8	103.0	96.8
4	102.0	105.6	97.0
5	101.5	103.1	96.9
6	100.3	100.0	96.4
7	97.5	96.9	—

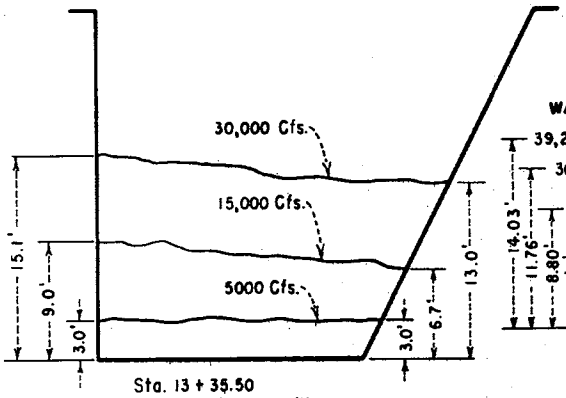

Sta. 13 + 35.50
Water surfaces profiles

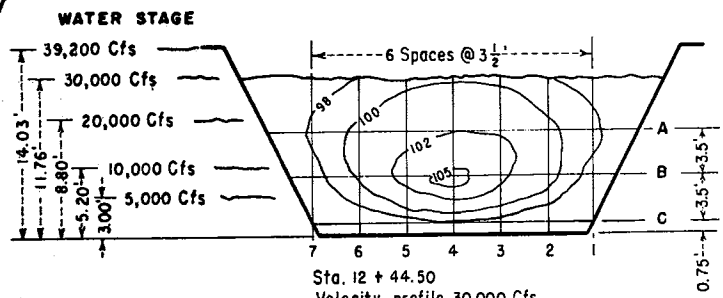

Sta. 12 + 44.50
Velocity profile, 30,000 Cfs.
Various water stages

Note: 1. All views looking downstream
2 For channel details see Figure 11

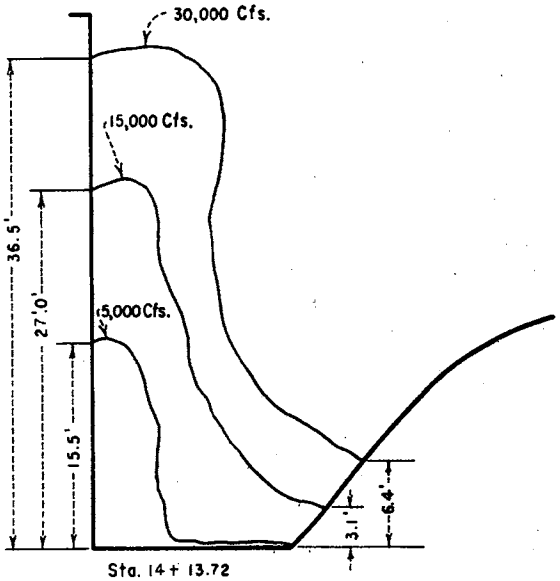

Sta. 14 + 13.72
Water surface profiles

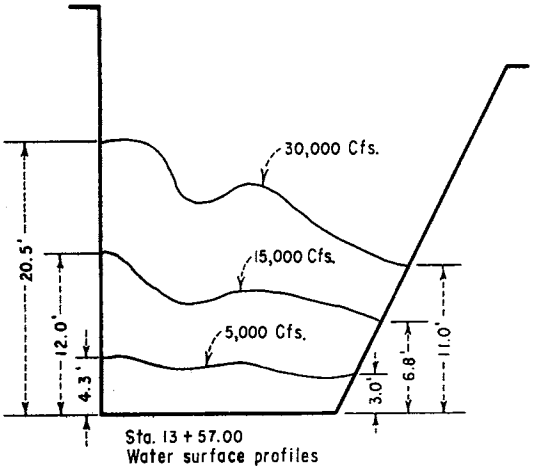

Sta. 13 + 57.00
Water surface profiles

YAKIMA STORAGE PROJECT—WASHINGTON

TIETON DAM
SPILLWAY REHABILITATION

WATER SURFACE CONDITIONS IN THE SPILLWAY CHUTE EXIT STRUCTURE
DESIGN NO. 5 (RECOMMENDED DESIGN)

MODEL SCALE 1:42

A. Looking Upstream

B. Q = 3,300 cfs. Looking Downstream.

TIETON DAM SPILLWAY REHABILITATION
1:42 MODEL SPILLWAY EXIT STRUCTURE--
RECOMMENDED DESIGN (DESIGN 5)

FIGURE 13
HYD-343

A. Q = 9,200 cfs.

B. Q = 29,000 cfs.

TIETON DAM SPILLWAY REHABILITATION
FLOW CONDITIONS IN 1:42 MODEL SPILLWAY EXIT STRUCTURE
RECOMMENDED DESIGN (DESIGN 5)

FIGURE 14
HYD-343