Brad

UNITED STATES
DEPARTMENT OF THE INTERIOR
BUREAU OF RECLAMATION

FLOW CHARACTERISTICS OF 8-, 10-, 12- AND 18-INCH CONCRETE FRESNO IRRIGATION FLOWMETERS

Hydraulic Laboratory Report No. Hyd.-340

ENGINEERING LABORATORIES BRANCH

DESIGN AND CONSTRUCTION DIVISION
DENVER, COLORADO

December 29, 1952

UNITED STATES
DEPARTMENT OF THE INTERIOR
BUREAU OF RECLAMATION

Design and Construction Division
Engineering Laboratories Branch
Denver, Colorado
December 29, 1952

Laboratory Report No. Hyd-340
Hydraulic Laboratory Section
Written by: J. B. Summers
Reviewed and
checked by: W. C. Case
J. W. Ball

Subject: Flow characteristics of 8-, 10-, 12-, and 18-inch concrete Fresno irrigation flowmeters

PURPOSE

1. Determine rating curves, head losses due to meters, and installation limitations.

2. Compare the Hydraulic Laboratory test results with information given in the booklet published in 1928 by the Fresno Irrigation District and titled "Methods and Devices Used in the Measurement and Regulation of Flow to Service Ditches, Together with Tables for Field Use," abbreviated edition, pages 26 to 39, inclusive.

CONCLUSIONS

1. The meter rating curves based on the laboratory tests agree closely with the rating curves in the Fresno publication (Figure 5).

2. Head losses through these meters, which contain sudden enlargements, are high. The head loss can be reduced by forming a gradual expansion from the throat of each meter to the inside diameter of the concrete pipe (Figures 6B and 7).

3. A pipe outlet must have the submergence given in the following table to insure a water surface in the downstream measuring well when the head difference (ΔH) in the measuring wells is 18 inches.

Meter size inches	Discharge cfs for H = 18"	Location of downstream well tap	Minimum submergence above pipe center in inches	
			Hyd Lab	Fresno publication
8	1.73	Top of pipe	17.4	--
10	2.50	Top of pipe	19.9	--
12	3.68	Side of pipe	11.3	11-1/8
18	8.52	Side of pipe	10.6	14-3/4

The conditions under which the above listed values were obtained and the submergence required for various discharges are shown on Figure 8.

4. The variation in the ratio of pipe inside diameter to throat diameter (ratio designated as R) results in different calibration curves for meters of the same nominal size. This is an undesirable feature.

5. If a single calibration curve applicable to all meters of a given size is desired, forms which will give a constant ratio of pipe inside diameter to throat diameter will have to be used.

ACKNOWLEDGMENT

The laboratory tests of Fresno flowmeters were initiated by Mr. E. C. Fortier of the Tulare Basin District in a letter to the Chief Engineer dated April 28, 1949. Concrete flowmeters in sizes 8, 10, 12, and 18 inches were furnished by the Fresno Irrigation District, Fresno, California. The study was made jointly by members of the Canals Branch, and the Engineering Laboratories Branch.

INTRODUCTION

The Bureau of Reclamation in recent years initiated a program for the development and standardization of various water-measuring devices. Among the devices investigated for feasibility, flow characteristics, and operational limitations was the concrete flowmeter used by the Fresno Irrigation District, Fresno, California.

The Fresno meter consists of a standard length of concrete pipe into which has been formed a circular throat section to give a reduction in cross-sectional area so that the principle of the venturi meter is applicable for the measurement of flow. The cylindrical throat section and the conical approach immediately upstream are cast by means of metal forms into standard pipe (Figure 1). The difference in static head taken one diameter upstream of the conical approach and 2 inches downstream of the throat section is the differential head (ΔH) across the meter. The publication by the Fresno Irrigation District shows the static head taps located on the side of the pipe for the 12- to 24-inch diameter meters and on the top of the pipe for the 8- and 10-inch diameter meters. The meters are available in 8-, 10-, 12-, 14-, 16-, 18-, 20-, and 24-inch sizes.

INVESTIGATION

The Laboratory Installation

The test installation used for the investigation in the Hydraulic Laboratory is shown on Figure 2. The flow was provided by a 12-inch centrifugal pump and measured by volumetrically calibrated venturi meters. For the four sizes of Fresno meters tested, two or more sections of concrete pipe

were placed upstream of the meter section to make certain of the developmei of a representative velocity distribution for concrete pipe. The joint betweei the steel pipe and concrete pipe was made watertight by first passing the con crete pipe through a diamond saw to get a smooth surface, then greasing the surface and holding it tight against a steel pipe flange by six tie rods to a similar flange at the opposite end of the concrete section (Figure 3). Prior to installing the concrete pipe, all rough edges were smoothed and recession grouted. A static head tap was installed in the steel pipe at 5 diameters dow stream from the metering section in order that the head loss due to the mete could be computed. A tailbox with a tailgate was installed on the outlet of the installation to control the elevation of the hydraulic grade line. This outlet arrangement permitted the determination of the submergence requirements of the meter.

Test Results

Capacities.--Logarithmic plots of differential head (ΔH) versus discharge were made for the four meters (Figure 5). Prior to establishing the curve which would average these data, the coefficient of discharge for each plotted point was computed from the following relationship which can be derived from Bernoulli's equation applied immediately upstream of the meter throat and in the meter throat:

$$C_d = \frac{Q\sqrt{A_1^2 - A_2^2}}{A_1 A_2 \sqrt{2g\ \Delta H}}$$

where

C_d = coefficient of discharge

Q = discharge, cfs

A_1 = flow area of meter pipe, ft^2

A_2 = flow area of meter throat, ft^2

g = gravitational force, 32.2 ft/sec^2

ΔH = differential head across meter, ft

A plot of C_d versus the throat velocity is shown on Figure 4. Using the average value for C_d at a particular velocity or discharge, the curve was then established on the logarithmic plot, Figure 5. The equation of the curve for each meter tested is given on this figure. Previously in this report it was stated that any variation of the ratio R, $\frac{D_1}{D_2}$, was an undesirable characteristic. For example, in the equation for the 8-inch meter:

$$Q = 1.49\ C_d \Delta H^{0.502}$$

The constant 1.49 is a factor called K for the meter, which comprises A_1, A_2, and g, thus:

$$K = \frac{A_1 A_2}{\sqrt{A_1^2 - A_2^2}} \qquad \sqrt{2g}$$

Any variation in R will change the value of K, making it necessary to prepare another rating curve for a meter of the same nominal size but with slightly different value for R.

Head Losses.--The head loss due to each meter was computed (Figure 7). To evaluate this head loss, the difference in static head at points P_1 and P_3, Figure 2, was determined and from this value was deducted the friction loss in the pipe downstream of the metering section to the P_3 station. The friction loss was determined using the Darcy equation,

$$H_L = f \frac{l}{d} \frac{V^2}{2g}$$

with the applicable values of "f" taken from King's Handbook of Hydraulics, 1939 edition Since the resulting value of head loss was high, ways to decrease this head loss were considered. A gradual expansion was formed on the 18-inch meter by placing concrete downstream of the throat section for a distance of 1 foot (Figure 6B). The lower head loss resulting from this gradual expansion rather than a sudden enlargement is shown on Figure 7.

Downstream submergence.--With insufficient submergence on the outlet of a turnout it is possible not to have a measurable water surface in the downstream well. The tailgate on the tailbox of the laboratory installation was used to determine the amount of submergence necessary to maintain a water surface at the downstream tap as noted on Figure 8. The submergence varies with the different meter sizes because of the location of the well taps. In the 8- and 10-inch meters the taps were on the top while in the 12- and 18-inch sizes the taps were on the sides. An examination of the figure shows an intersection of the 8- and 10-inch submergence curves in the lower flow range. This intersection results when the curves are passed through zero discharge. At zero discharge, the distance from the pipe center to the top of the piezometer used in these tests is greater for the 10-inch meter than for the 8-inch. This does not occur on the 12- and 18-inch meters since the measuring taps are located on the side of the pipe.

If the static pressure shown on Figure 8 does not give sufficient depth in the measuring well for certain recording devices such as a hook gage, the submergence must be increased over that shown.

The pipe outlet should flow full to have the meters operate as intended. On the 12- and 18-inch meters, with the well taps on the side of the pipe, it was possible to have a positive pressure at the taps and yet have the pipe not flowing full.

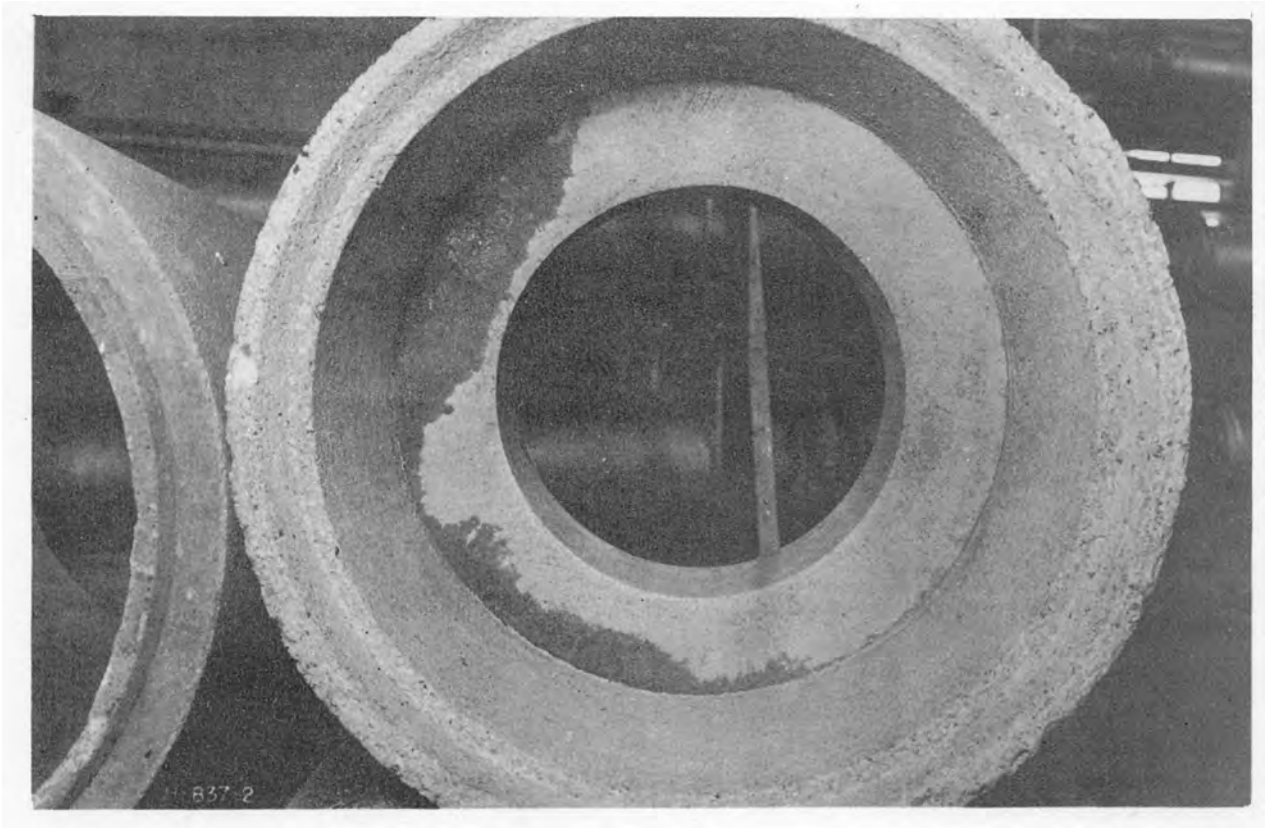

(A.) Looking Upstream

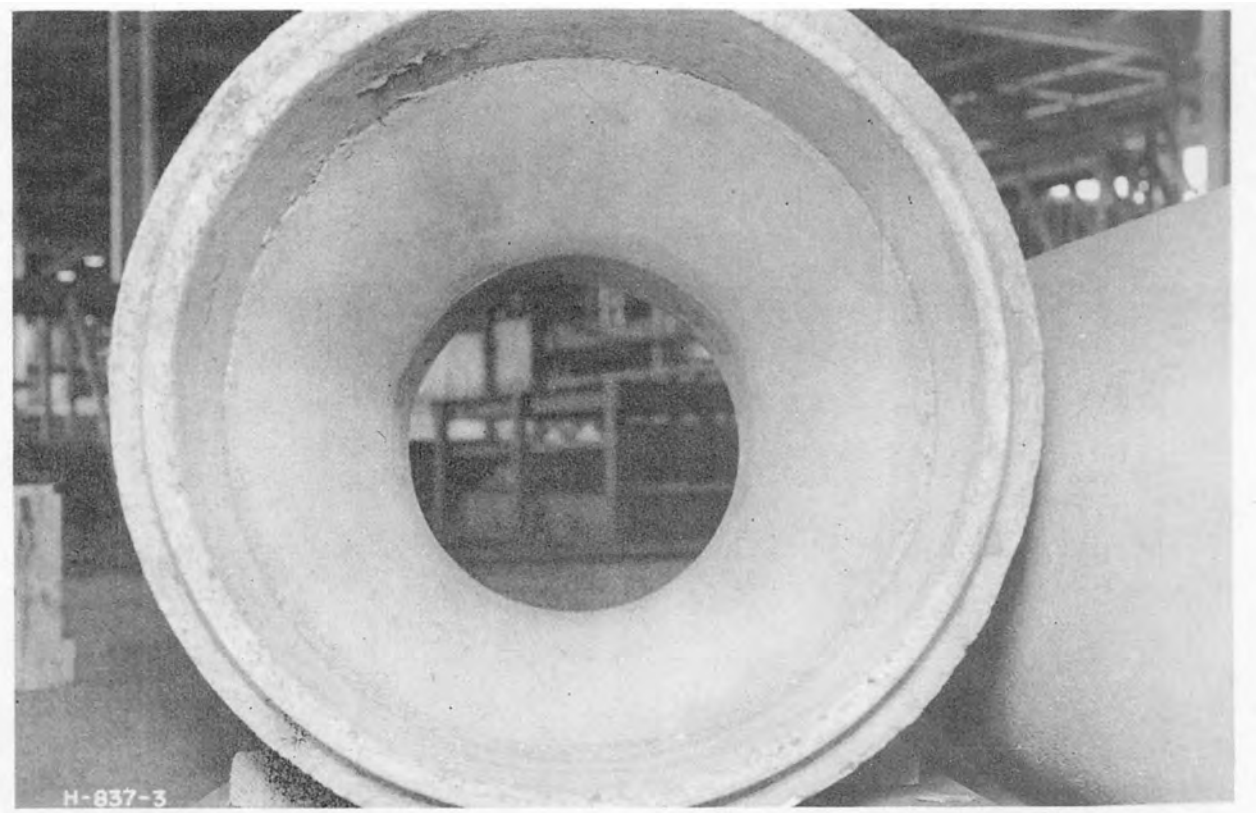

(B.) Looking Downstream

TESTS OF FRESNO IRRIGATION FLOWMETERS
18-Inch Fresno Meter

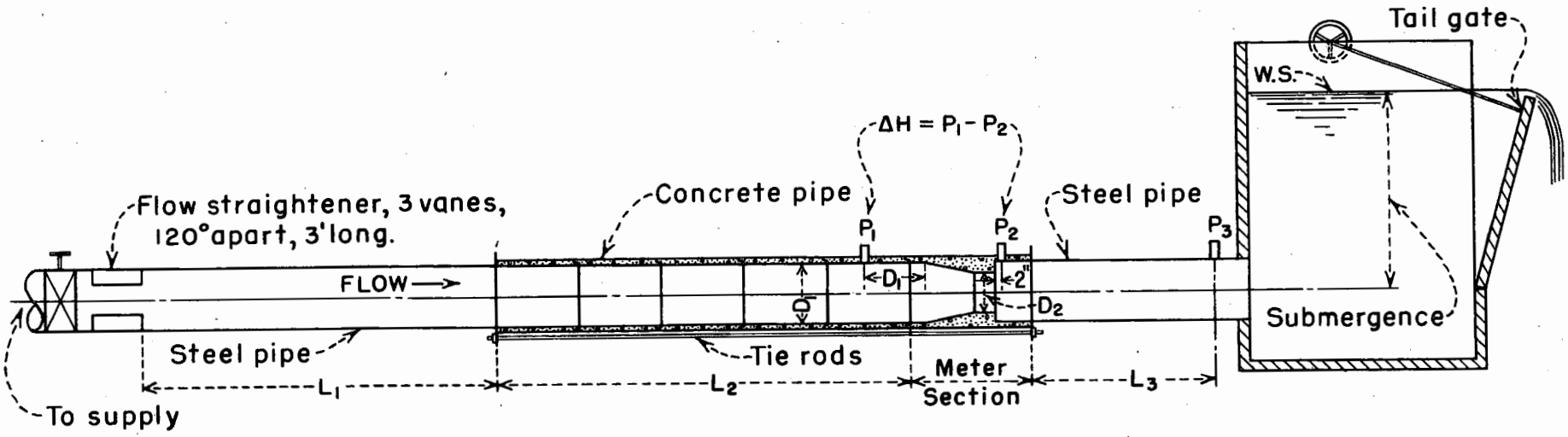

METER SIZE	D_1*	D_2*	$R=\frac{D_1}{D_2}$	L_1	L_2	L_3
8"	7.94"	5.47"	1.45	22'	6'	5'
10"	9.94"	6.67"	1.49	21'	6'	5'
12"	11.78"	8.13"	1.45	19'	8'	5'
18"	17.94"	12.14"	1.48	10'	16'	8'

*Average of 6 measurements.

TESTS OF FRESNO IRRIGATION FLOWMETERS

LABORATORY INSTALLATION DRAWING

FIGURE 2
Report Hyd. 340

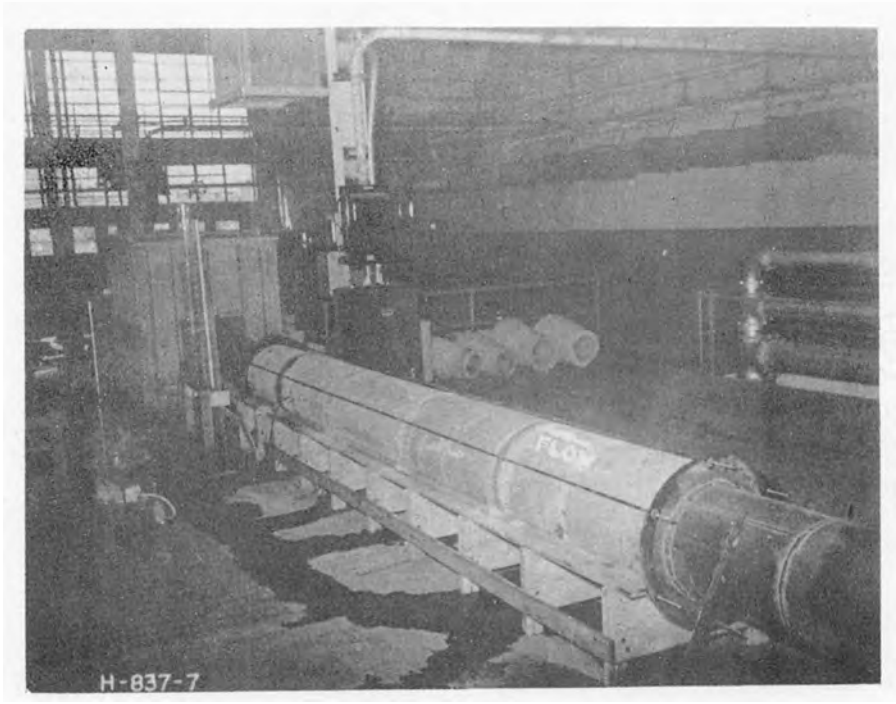

(A.) 18-inch meter

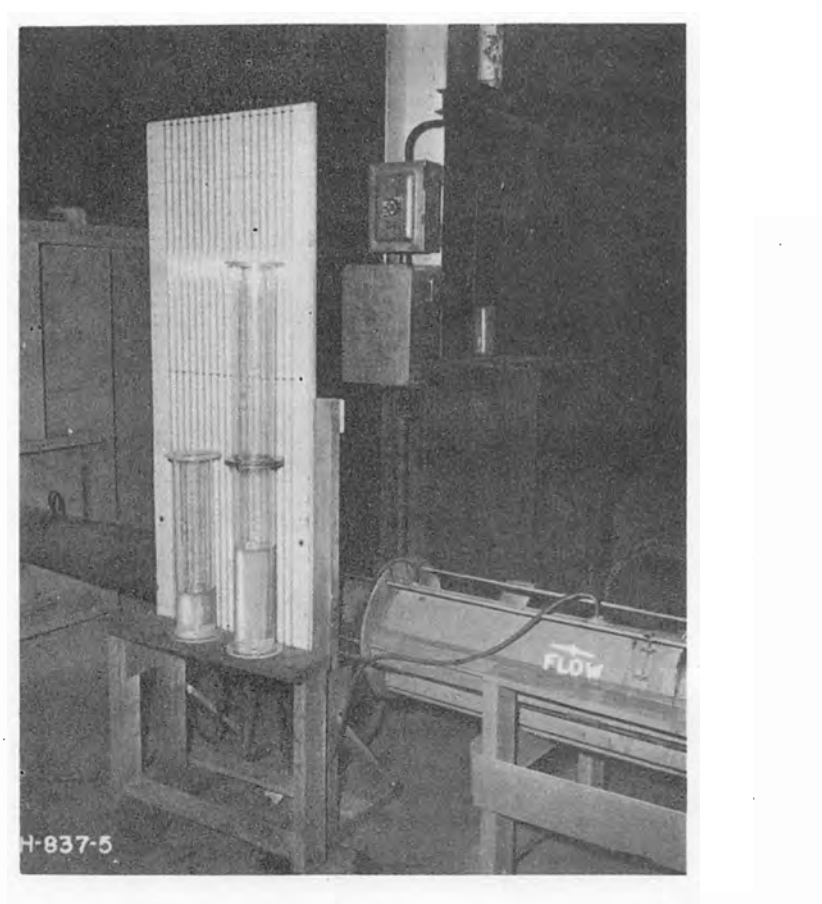

(B.) Plastic measuring wells (laboratory use only) used for all meters tested.

TESTS OF FRESNO IRRIGATION FLOWMETERS
Laboratory Installation

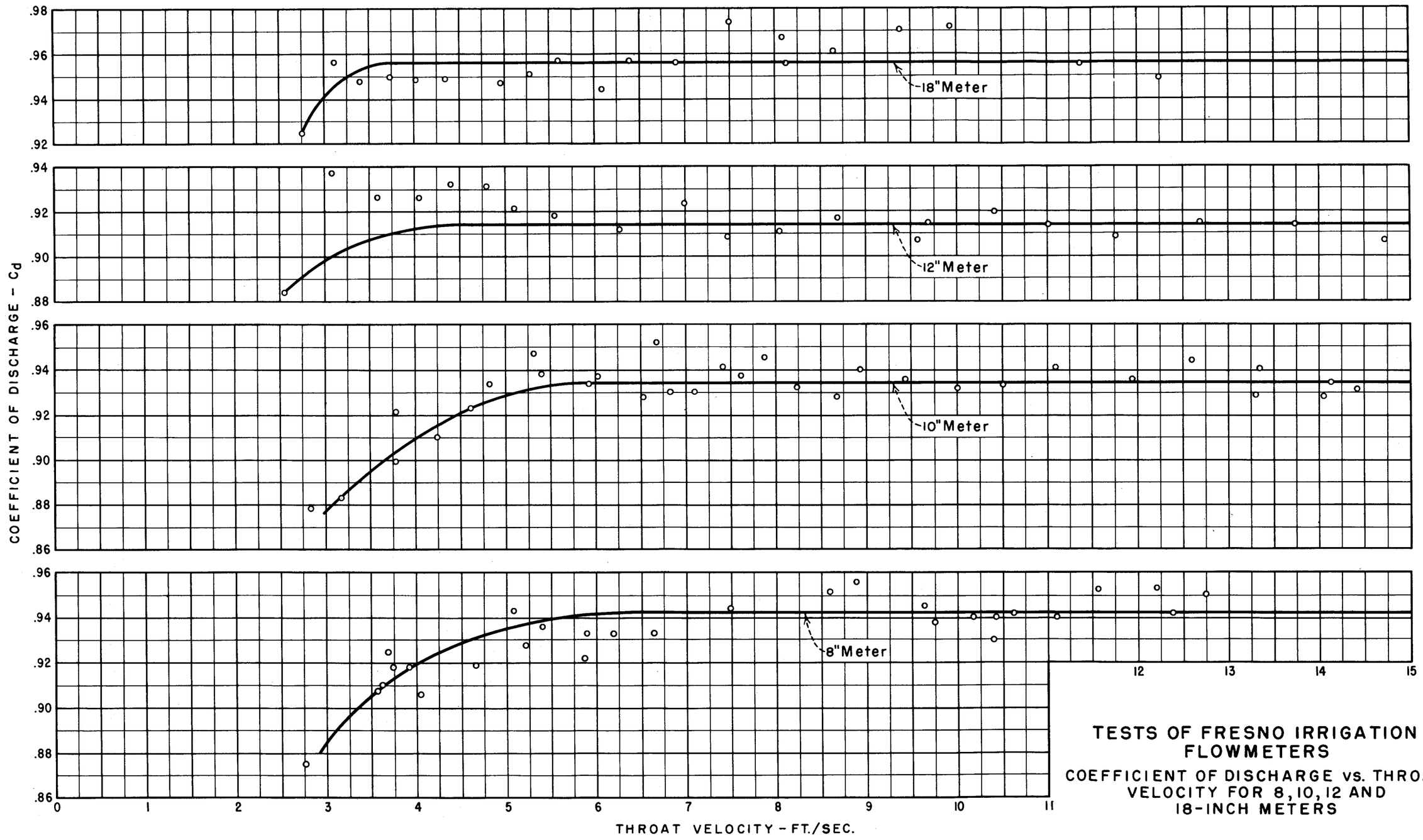

TESTS OF FRESNO IRRIGATION FLOWMETERS

COEFFICIENT OF DISCHARGE vs. THROAT VELOCITY FOR 8, 10, 12 AND 18-INCH METERS

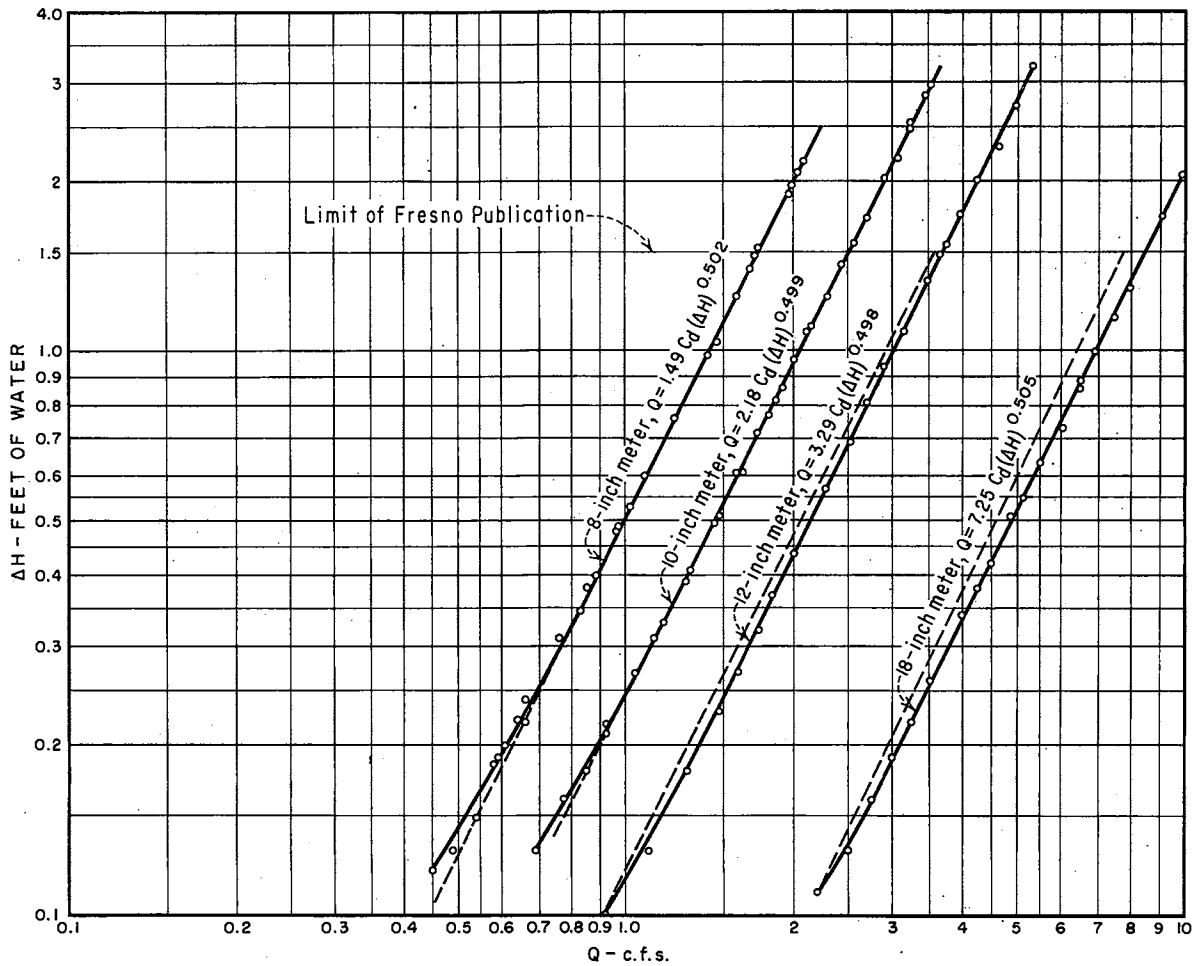

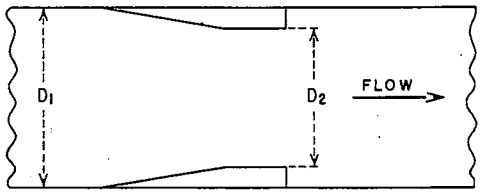

METER SIZE	D_1	D_2	R	K
8"	7.94"	5.47"	1.45	1.49
10"	9.94"	6.67"	1.49	2.18
12"	11.78"	8.13"	1.45	3.29
18"	17.94"	12.14"	1.48	7.25

$$Q = C_d \frac{A_1 A_2}{\sqrt{A_1^2 - A_2^2}} \sqrt{2g\,\Delta H}$$

Q – Discharge, c.f.s.

C_d – Coefficient of discharge.

A_1 – Area of section at D_1 – ft.^{2}

A_2 – Area of section at D_2 – ft.^{2}

g – Gravitational force, 32.2 ft./sec.^{2}

ΔH – Differential Head across meter – ft.

R – Ratio of pipe dia. to throat dia., $\frac{D_1}{D_2}$

K – Constant for meter, $\frac{A_1 A_2 \sqrt{2g}}{\sqrt{A_1^2 - A_2^2}}$

NOTE

Dashed lines represent the data contained in the publication, by Fresno Irrigation District, titled "Methods and Devices used in the Measurement and Regulation of the Flow to Service Ditches, Together with Tables for Field Use," Page 26 to 39, 1928. Data for the 8 and 10-inch meters was taken from Table X, Page 33. Data for the 12 and 18-inch meters was taken from Table IX, Page 31. Plotted points represent the data of the Bureau's Hydraulic Laboratory.

TESTS OF FRESNO IRRIGATION FLOWMETERS

RATING CURVES 8, 10, 12 AND 18-INCH METERS

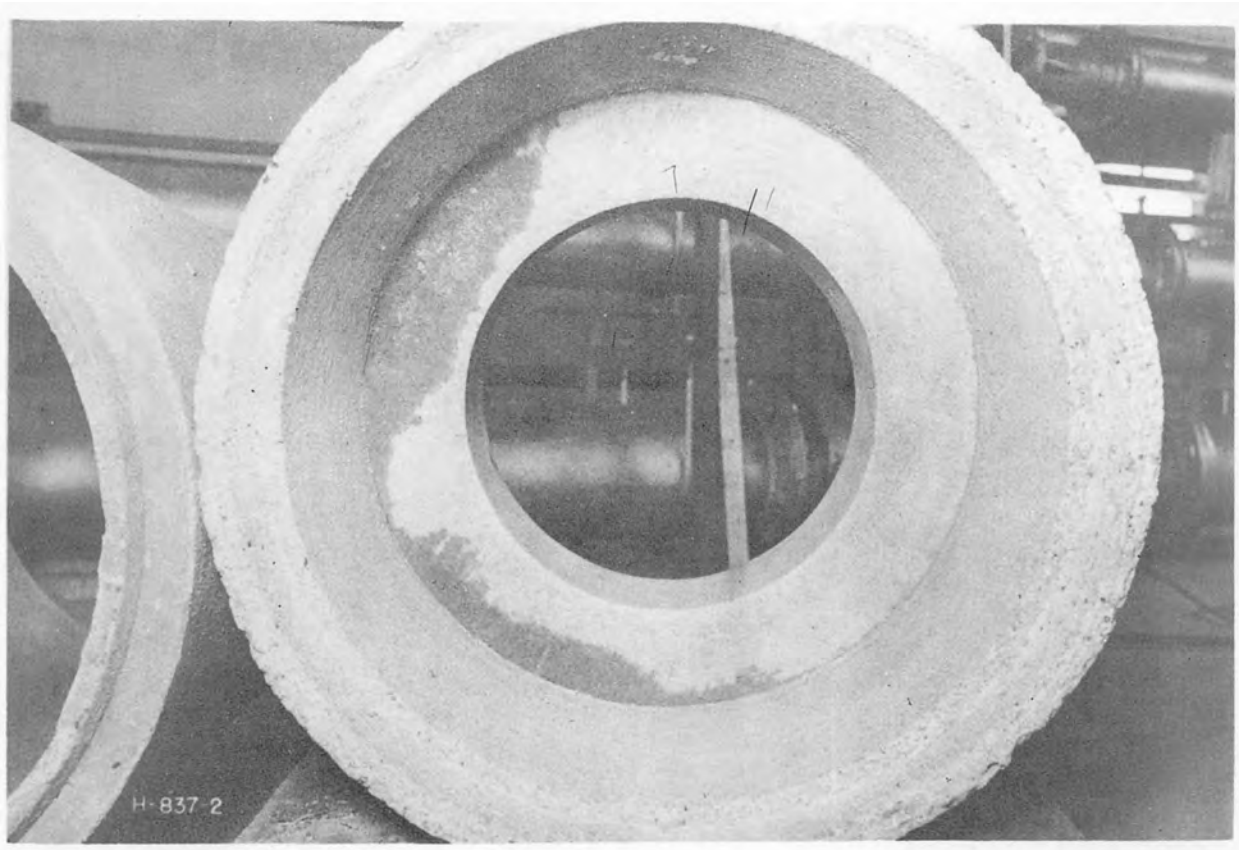

(A.) Original metering section

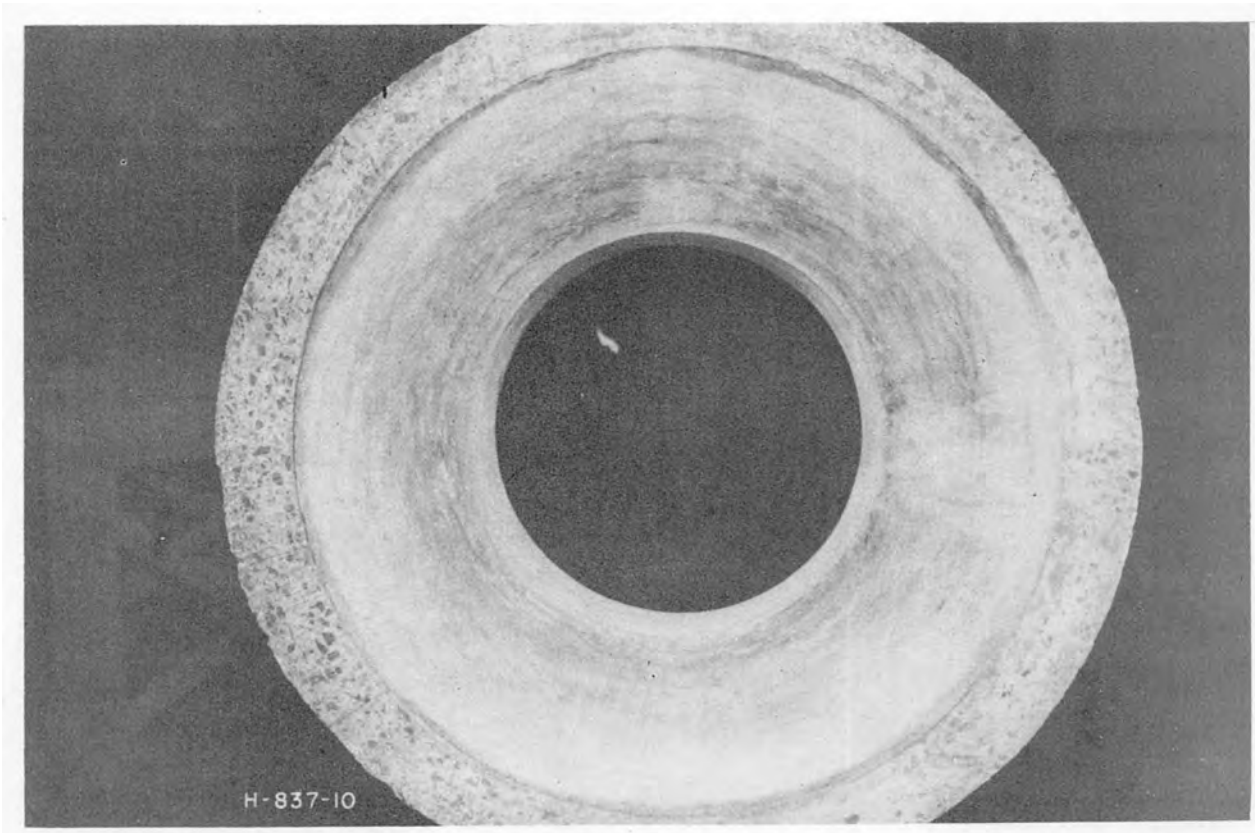

(B.) After gradual expansion was added

TESTS OF FRESNO IRRIGATION FLOWMETERS
Head Loss Study--18 Inch Meter

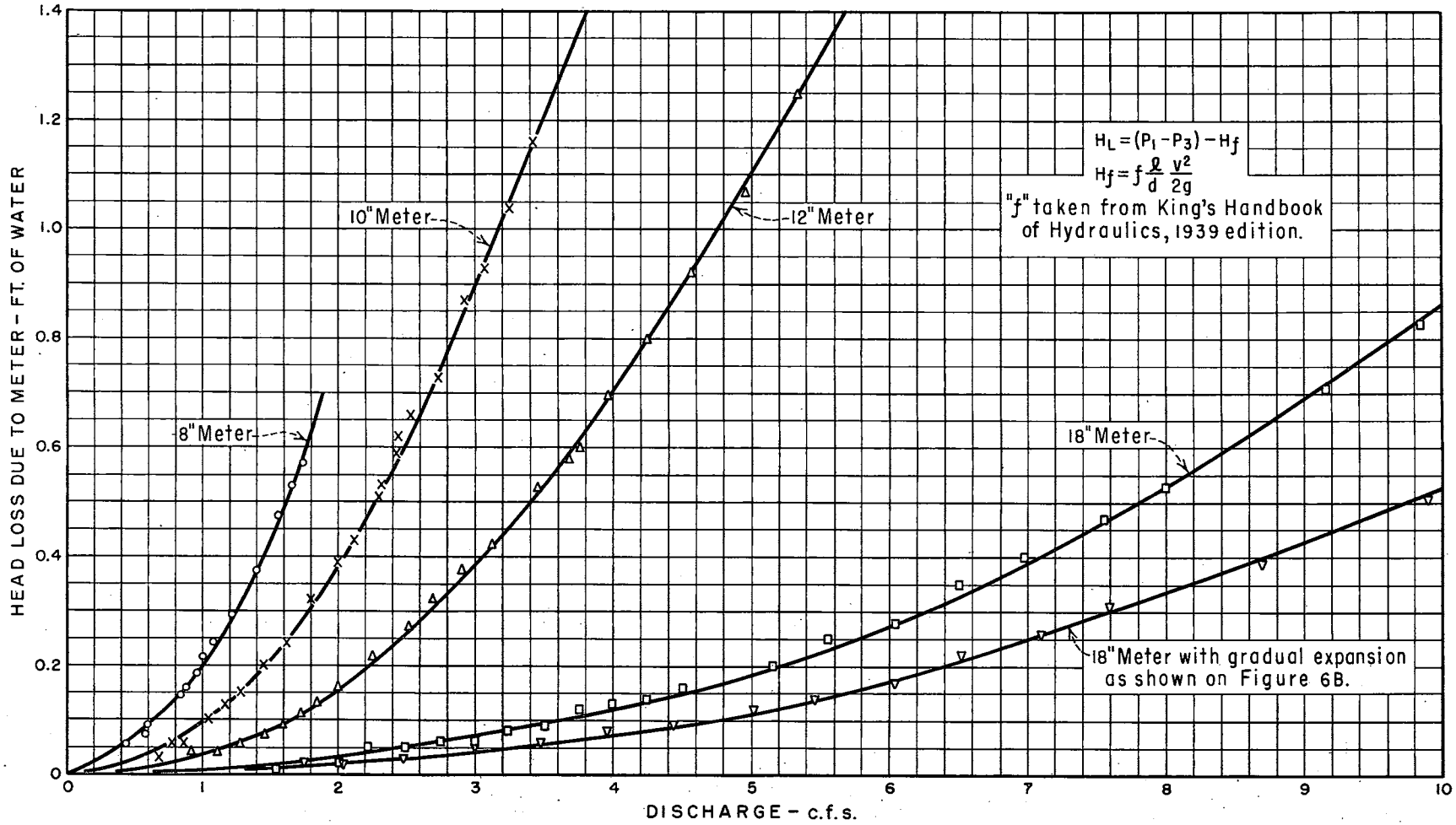

TESTS OF FRESNO IRRIGATION FLOWMETERS
HEAD LOSS CURVES

FIGURE 7
Report Hyd. 340

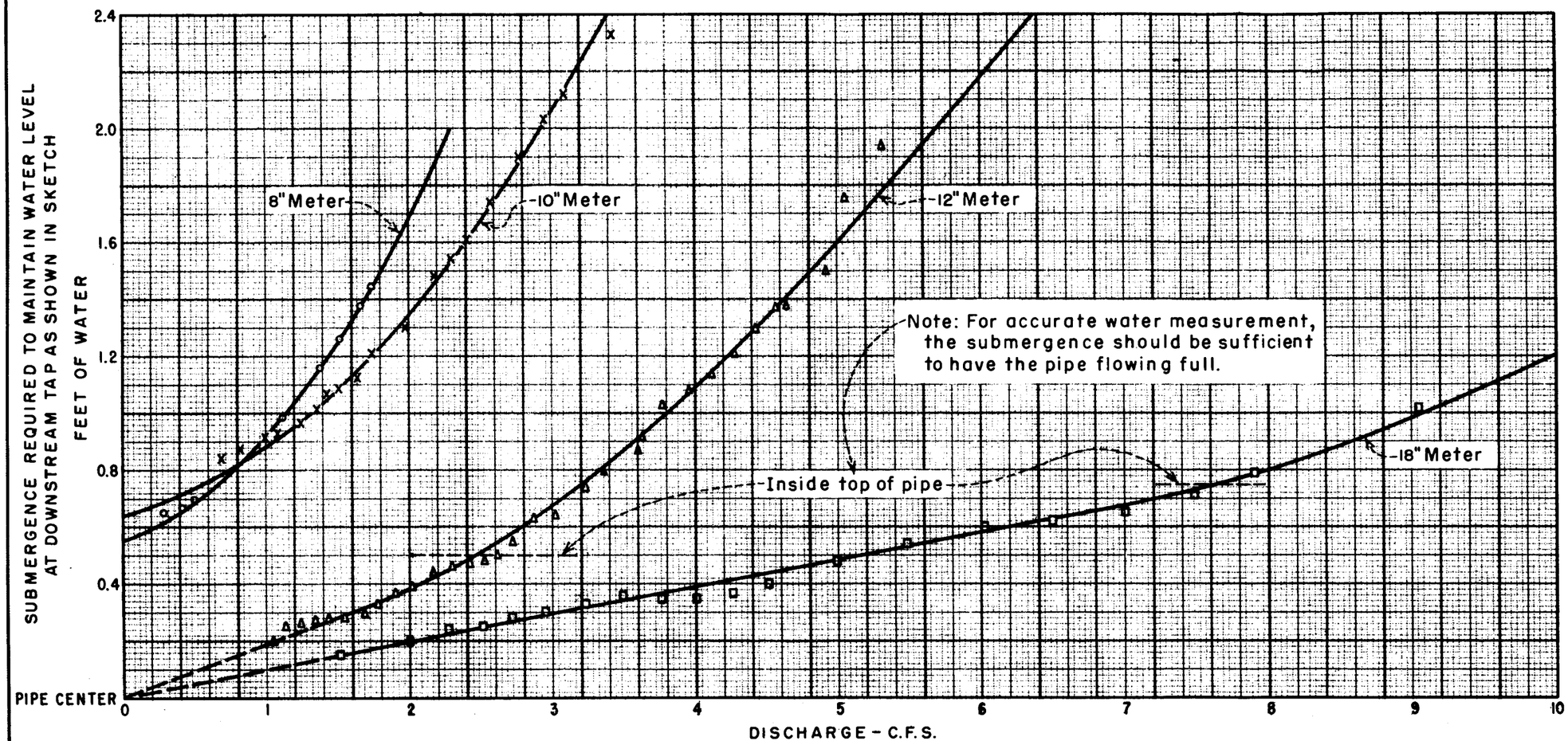

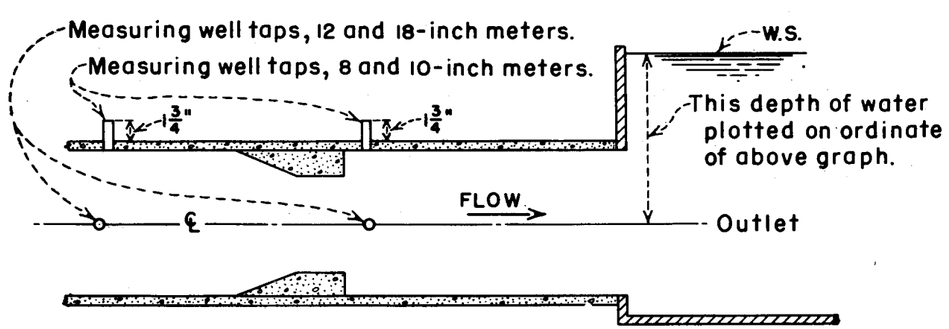

NOTES

The required submergence was that which just gave a pressure slightly above the downstream piezometer located on top of the pipe for the 8 and 10-inch meters and on the side for the 12 and 18-inch meters. All results are for horizontal installation only.

TESTS OF FRESNO IRRIGATION FLOWMETERS
OUTLET SUBMERGENCE REQUIREMENTS

Interior - Reclamation - Denver, Colo.