UNITED STATES
DEPARTMENT OF THE INTERIOR
BUREAU OF RECLAMATION

FISH SCREEN HEAD LOSS--PERFORATED 16-GAGE STEEL PLATE (5/32-INCH HOLES STAGGERED ON 7/32-INCH CENTERS) VERSUS 5-MESH, 19-GAGE GALVANIZED WIRE--TRACY PUMPING PLANT INTAKE--CENTRAL VALLEY PROJECT

Hydraulic Laboratory Report No. Hyd.-274

RESEARCH AND GEOLOGY DIVISION

BRANCH OF DESIGN AND CONSTRUCTION
DENVER, COLORADO

MARCH 2, 1950

UNITED STATES
DEPARTMENT OF THE INTERIOR
BUREAU OF RECLAMATION

Branch of Design and Construction
Research and Geology Division
Denver, Colorado
March 2, 1950

Laboratory Report Hyd-274
Hydraulic Laboratory
Compiled by: Wiley J. Karrh
Reviewed by: W. C. Case and J. W. Ball

Subject: Fish screen head loss--Perforated 16-gage steel plate (5/32-inch holes staggered on 7/32-inch centers) versus 5-mesh, 19-gage galvanized wire--Tracy Pumping Plant Intake--Central Valley Project

PURPOSE

To compare the loss in head of the above fish screens for water approach velocities from 0.5 to 3.5 feet per second and with the screens in two positions:

(a) Screen surface vertical
(b) Screen surface 45° to the vertical

CONCLUSIONS

1. The loss in head through the perforated screen is from 8.5 to 12 times higher than the loss in head through the 5-mesh, 19-gage wire screen for both screens in the vertical position. Correspondingly for both screens in the 45° position, the loss in head is 5.8 to 8 times higher. Typical head loss values, taken from Figures 4 and 6, are given below:

Approach velocity feet per second	Head loss in feet of water		
	Perforated screen Smooth side upstream		5-mesh, 19-gage, galvanized wire screen vertical position
	Vertical position	45° position	
1.0	.12	.08	.01
2.0	.57	.30	.05
3.0	1.26	.70	.13

2. The majority of the holes in the perforated screen are slightly tapered with the smaller diameter on the smooth side of the screen. Some of the holes vary in shape from round to slightly elliptical. Furthermore, the hole irregularities are not uniformly distributed over the sample screen that was received for test. These facts are believed to

be the cause for having a slightly greater head loss with the smooth side of screen upstream using one specimen of the sample screen which was not the case using a second specimen of the screen (Figures 4 and 6 respectively).

3. The velocity head loss coefficient K in the expression,

$$\Delta H = K \frac{V^2}{2g}$$

was determined for the perforated screen and the 5-mesh screen for both the vertical and the 45° positions (Figures 5 and 7).

DESCRIPTION OF THE FISH SCREENS

The perforated screen tested was a 16-gage steel plate with 5/32-inch diameter holes punched on staggered 7/32-inch centers. The action of the punch when producing the holes made what appeared to be a slight radius at the entrance of the holes (Figure 1-A), and it left somewhat larger diameter hole with a small burr at the exit (Figure 1-B). The side from which the holes were punched was termed the smooth side while the other side was termed the rough side. The perforated screen had irregularities as described in Conclusion No. 2. The test screen was obtained from the California State Fish and Game Department through the office of the Regional Engineer, Region 2. This perforated screen is similar to that made by the Harrington and King Perforating Company, 5655 Filmore Street, Chicago, Illinois, and is illustrated on page 36 of Harrington and King Catalog No. 62 for 1947.

Five-mesh, 19-gage, galvanized wire screen has five 0.156-inch square openings per linear inch and a wire diameter of .037-inch (Figure 2).

DESCRIPTION OF TEST APPARATUS

The tests were made with the screens in a 6-inch pipe having an open elbow 15 diameters downstream from the test screens and turned upward to insure that the pipe was flowing full at all rates of discharge. There were 30 diameters of straight unobstructed pipe upstream from the test screens to insure a symmetrical distribution of the approach velocity. Piezometers were placed in the pipe as shown in Figure 3. Piezometers No. 3 and 4 were used to determine if there was additional recovery downstream. The rate of flow was measured with a standard 8-inch laboratory orifice-venturi meter.

FISH SCREEN TESTS

The fish screens were tested in two positions relative to the pipe axis; first, vertically between two flanges; and second, at 45° with pipe centerline just upstream from the first flange and downstream from Piezometer No. 1 (Figure 3). The 45° screen position was accomplished by spot soldering the elliptical screen to the pipe's inside surface. Two different specimens of the perforated screen sample were used, one for the vertical position and one for the 45° position.

Fish Screen Vertical

With the perforated screen vertical and the smooth side upstream, the water was passed through the screen with the approach velocities ranging from 0.5 to 3.5 feet per second. The head in feet of water was measured 12 inches upstream from the screen and 6 inches downstream from the screen and the loss in head between these two points was recorded. The perforated screen was then reversed to place the smooth side downstream, and the test was repeated. In the next test the perforated screen was replaced with the 5-mesh, 19-gage galvanized wire screen in a vertical position. Water was passed through the screen using the above approach velocities and the head loss was determined.

Fish Screens at 45° Angle to Pipe Centerline

Three similar tests were run as follows:

(a) The perforated screen at 45° to pipe centerline with smooth side upstream

(b) The perforated screen at 45° to pipe centerline with smooth side downstream

(c) Five-mesh, 19-gage galvanized wire screen at 45° to pipe centerline.

The same data were recorded as with the fish screen vertical.

RESULTS OF TEST

Curves from the data were prepared showing head loss in feet of water versus approach velocity in feet per second (Figures 4 and 5) and K velocity head loss versus approach velocity where $K = \frac{2g\Delta h}{V^2}$ (Figures 5 and 7). With the smooth side of the perforated screen downstream, the loss in head was slightly less using one specimen of the sample screen while this was not true using a second specimen of the sample screen (Figures 4 and 6 respectively). These unexpected results were attributed to the nonuniformity of the holes in the

screen sample as described in Conclusion No. 2. The data was checked to make sure the results were as shown on the curves. At all approach velocities the loss in head through the 5-mesh, 19-gage galvanized wire screen was from 8.5 to 12 times less than the loss in head through the perforated screen with both screens in the vertical position. Correspondingly with both screens in the 45° position, the loss in head is 5.8 to 8 times less.

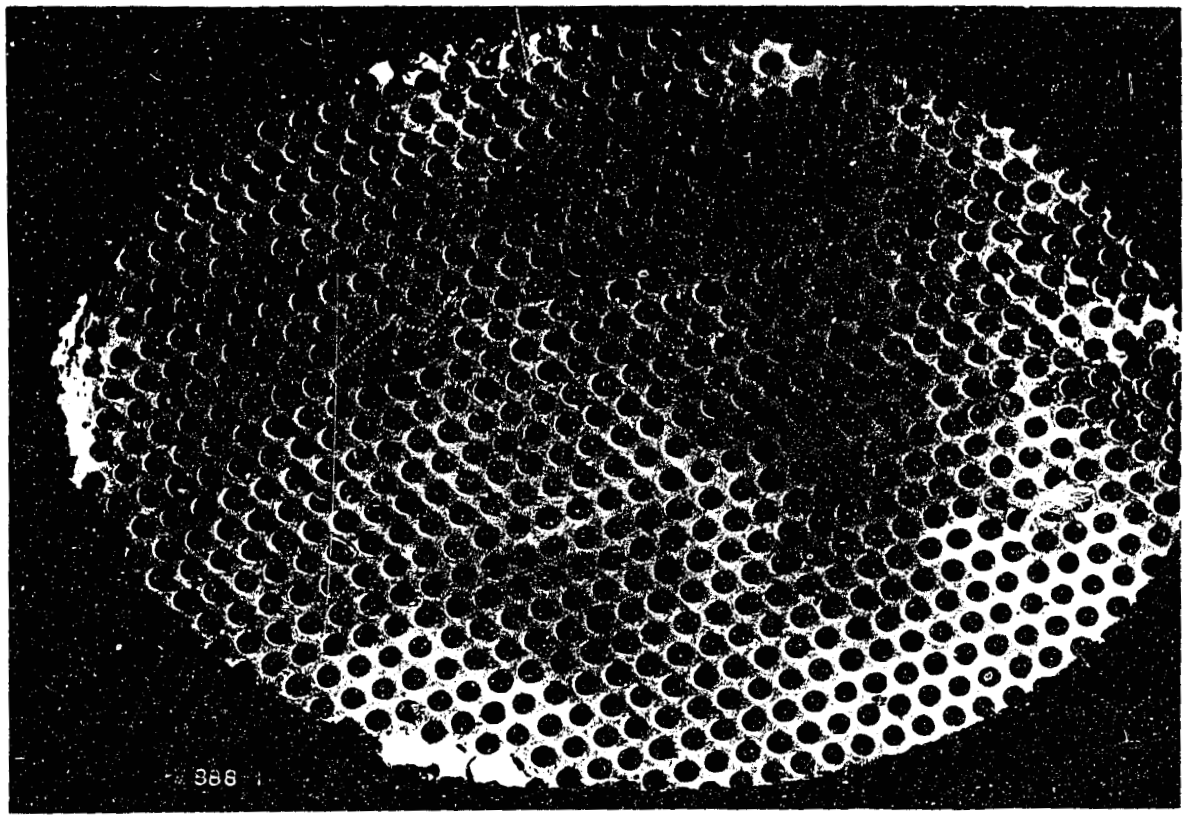

A-- Smooth side

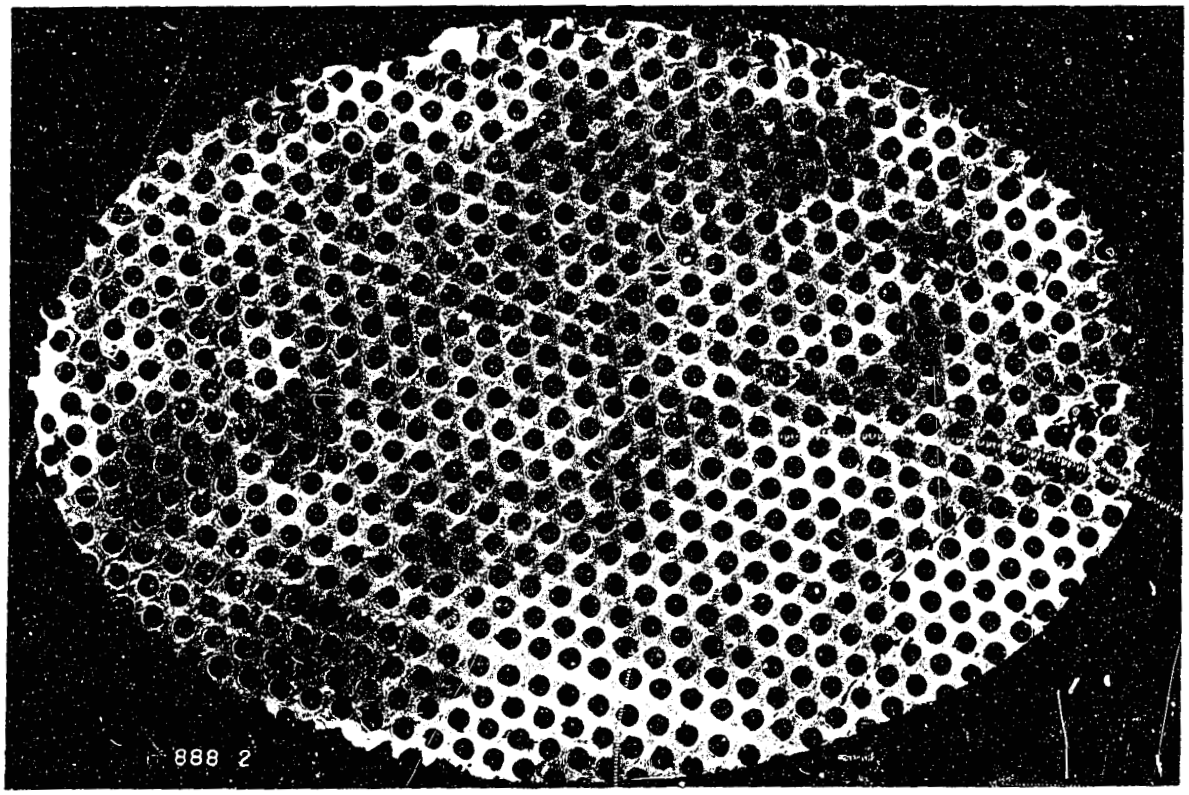

B-- Rough side

Fish Screen--Perforated 16-gage Steel Plate--5/32-inch Holes Staggered on 7/32-inch Centers.

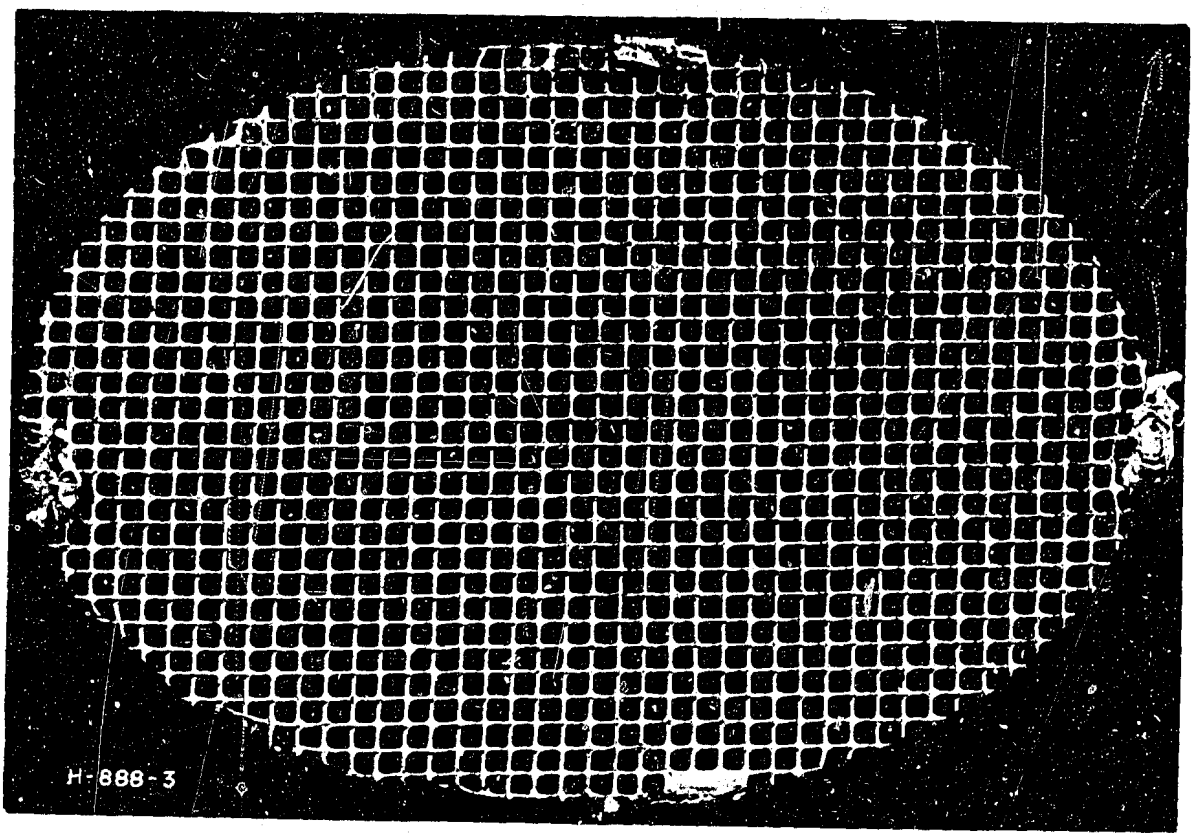

Fish Screen-- 5-Mesh, 19 Gage Galvanized Wire

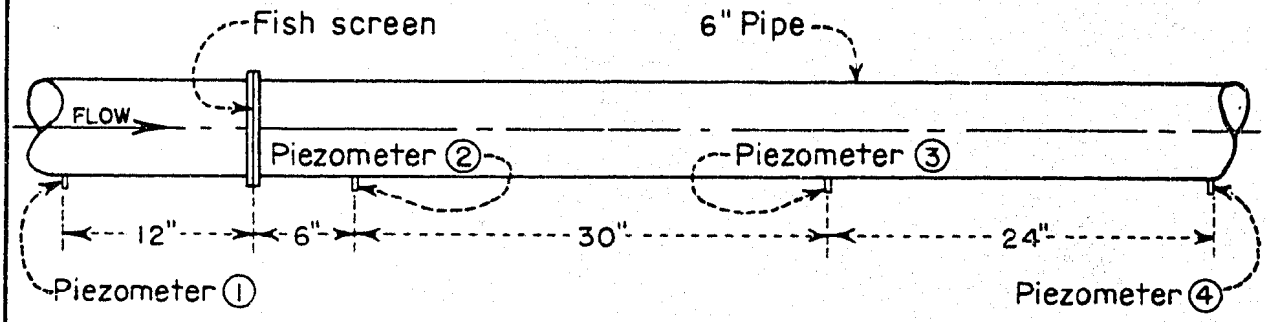

FISH SCREEN TESTING APPARATUS

VERTICAL POSITION

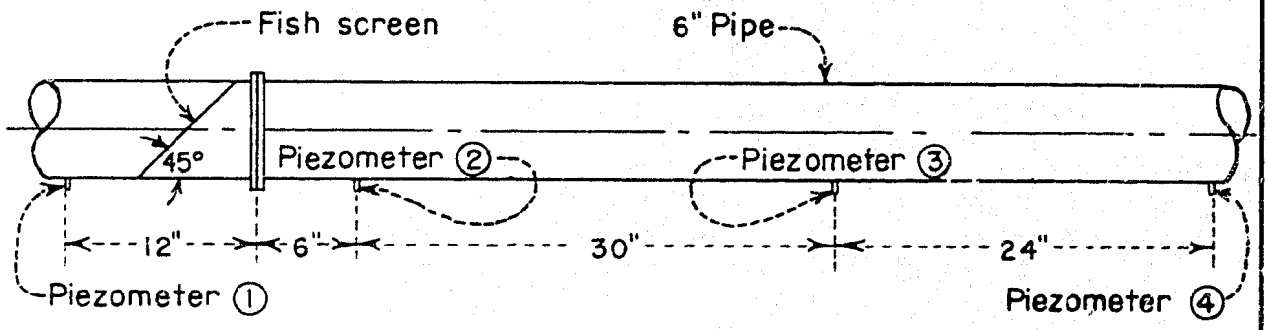

FISH SCREEN TESTING APPARATUS

45° WITH VERTICAL POSITION

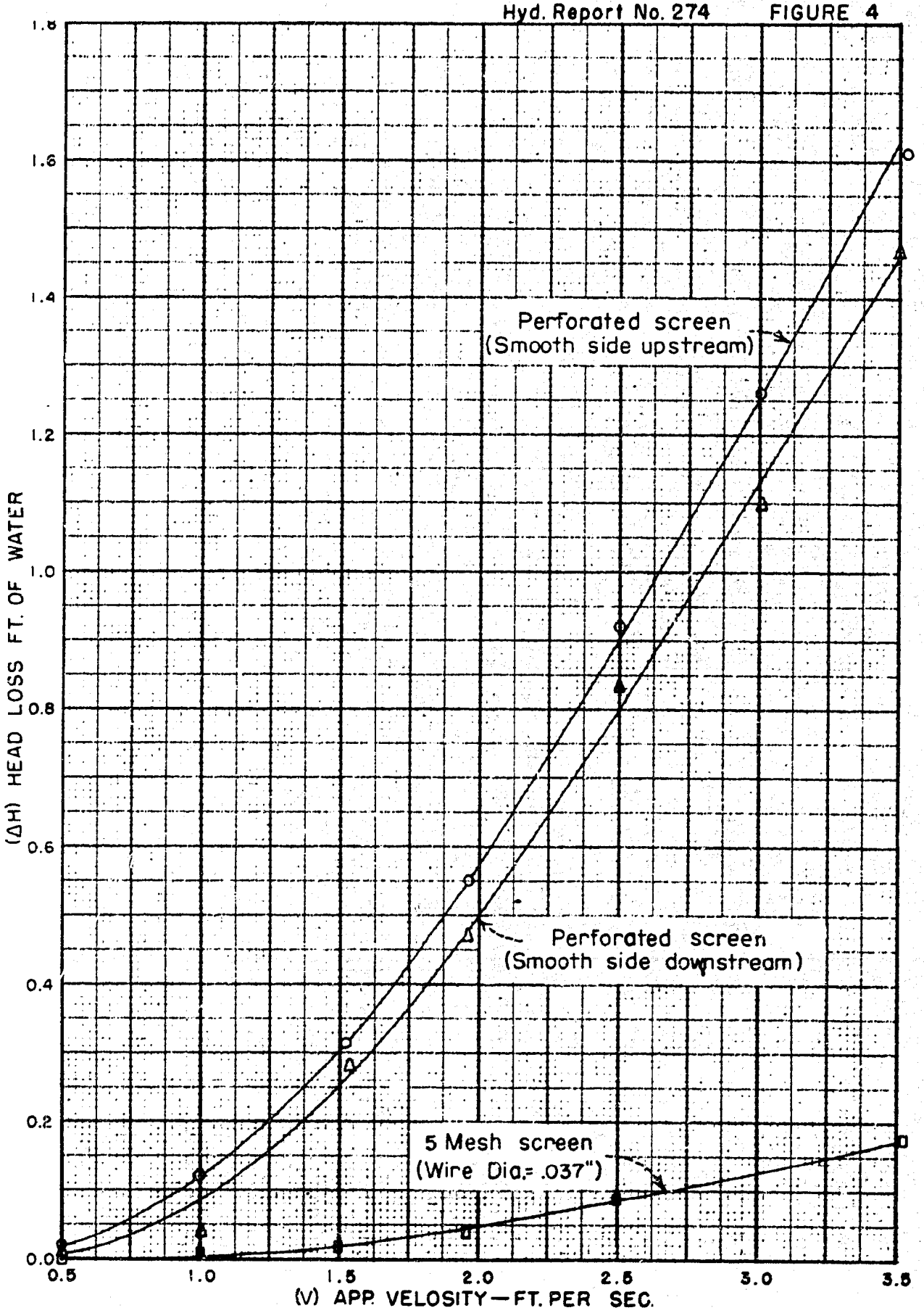

HEAD LOSS VS APPROACH VELOCITY
FISH SCREEN VERTICAL

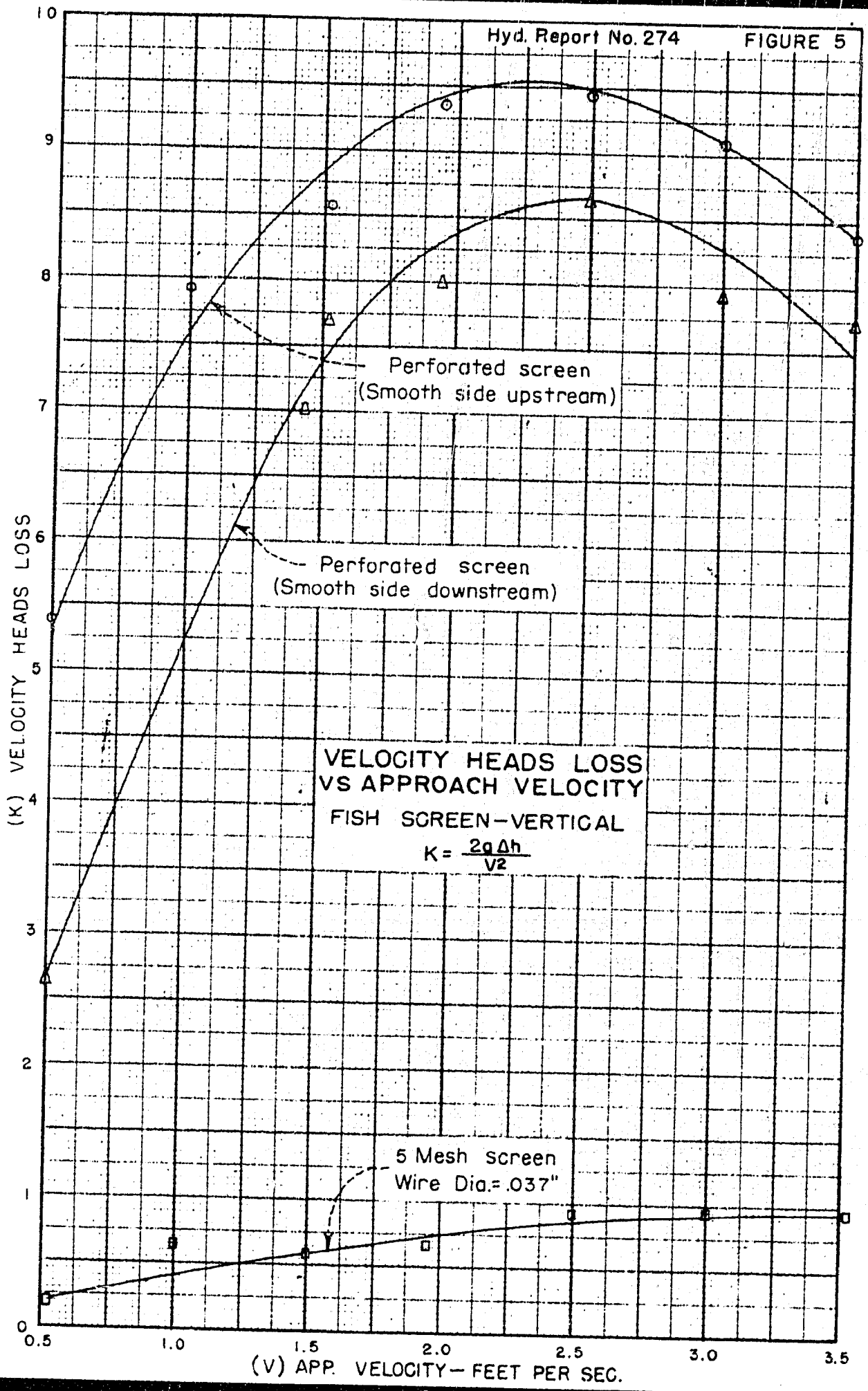
Hyd. Report No. 274
FIGURE 5
Perforated screen
(Smooth side upstream)
Perforated screen
(Smooth side downstream)
VELOCITY HEADS LOSS
VS APPROACH VELOCITY
FISH SCREEN-VERTICAL
$K = \frac{2g\Delta h}{V^2}$
5 Mesh screen
Wire Dia.=.037"
(K) VELOCITY HEADS LOSS
(V) APP. VELOCITY-FEET PER SEC.
0
1
2
3
4
5
6
7
8
9
10
0.5
1.0
1.5
2.0
2.5
3.0
3.5

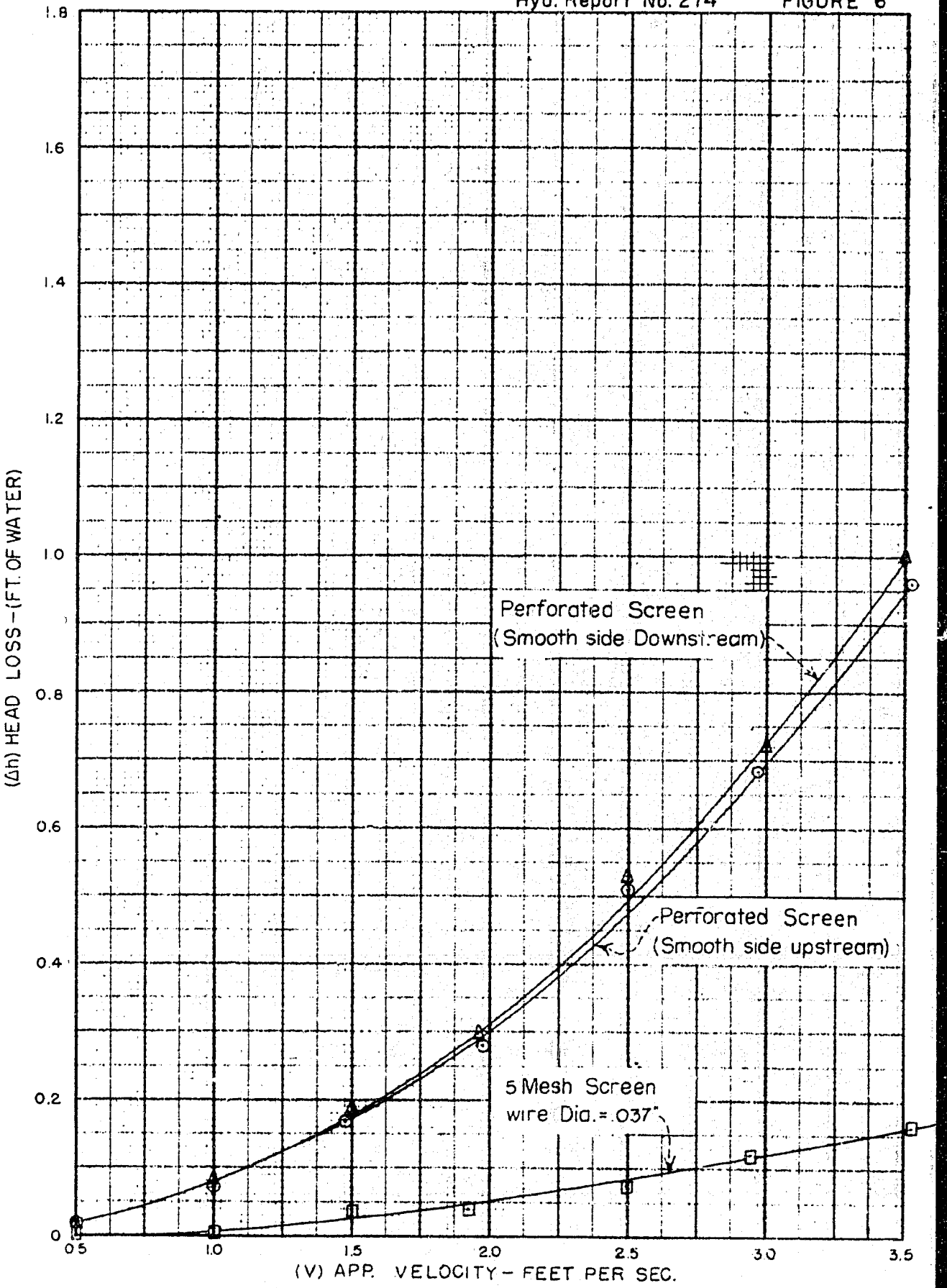

HEAD LOSS VS APPROACH VELOCITY
FISH SCREEN 45°

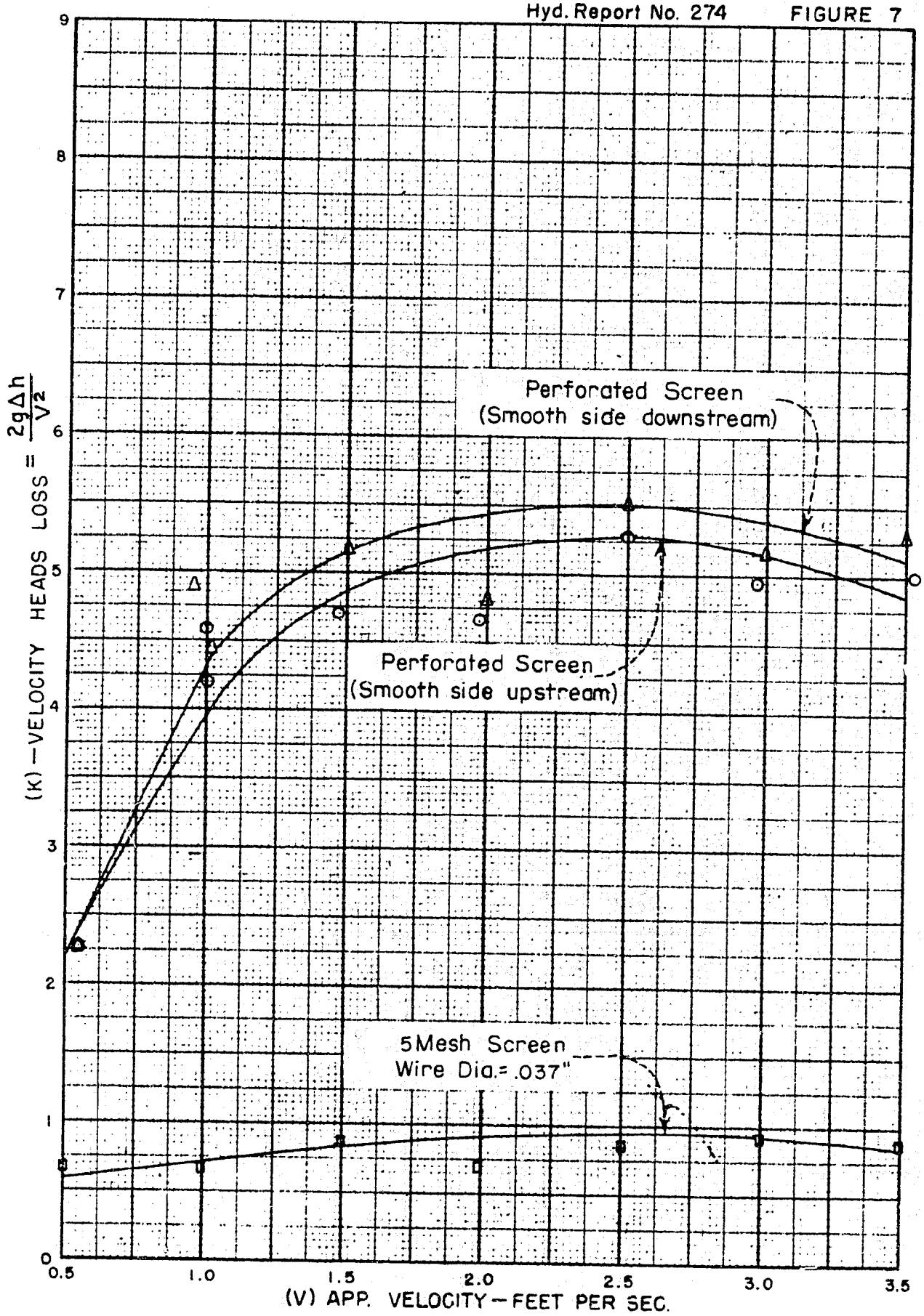

VELOCITY HEADS LOSS VS APPROACH VELOCITY

FISH SCREEN — 45°