UNITED STATES
DEPARTMENT OF THE INTERIOR
BUREAU OF RECLAMATION

- - -

HYDRAULIC LABORATORY REPORT NO. 181

- - -

CONSTRUCTION OF TYPE A CRANES STREAM-GAGING EQUIPMENT DENVER HYDRAULIC LABORATORY

By

F. C. LOWE

- - -

Denver, Colorado
August 13, 1945

HYD 181

UNITED STATES
DEPARTMENT OF THE INTERIOR
BUREAU OF RECLAMATION

Branch of Design and Construction
Engineering and Geological Control
and Research Division
Denver, Colorado
August 13, 1945

Laboratory Report No. 181
Hydraulic Laboratory
Compiled by: F. C. Lowe

Reviewed by: J. E. Warnock

Subject: Construction of type A cranes - Stream-gaging equipment - Denver Hydraulic Laboratory.

1. The type A crane, as shown in figure 1, is used for stream-flow measurements on bridges where current meter weights between 30 and 75 pounds are necessary. This crane is mounted on three wheels designed to hold the current meter and weight in a balanced position while moving between stations (figure 1A). For stream measurement the crane is tilted to lean against the bridge rail so the boom extends the current meter and weight clear of the bridge (figure 1B). To facilitate transportation by truck or car, the crane may be folded into a compact unit. First, the current meter, weight, reel, and protractor are removed, then the folding proceeds as shown on figure 2. A further description of this crane and its use is given on pages 203-204 of "Stream-gaging procedure - Geological Survey Water-supply Paper 888," a manual describing methods and practices of the Geological Survey.

2. This crane was designed by the U. S. Engineer office at Cincinnati, Ohio, and the U. S. Geological Survey at Columbus, Ohio. They are used principally by the Geological Survey and prior to the war, the needs of the Bureau of Reclamation were furnished by the Geological Survey. However, when three cranes were requisitioned for Central Valley Project, about January 1, 1945, the Geological Survey was unable to furnish them. Instead, they furnished a set of blueprints to permit the cranes to be built in the shop of the hydraulic laboratory of the Bureau of Reclamation in Denver.

3. Since May, 1942, current meters belonging to the Bureau of Reclamation have been repaired in the hydraulic laboratory as described in Hydraulic Report No. 165. Through this work the personnel have become familiar with other stream-gaging equipment including the type A crane. Therefore, they were in a good position to build the cranes. Materials for five were ordered, three for the Central Valley Project and two for stock, the latter in keeping with the policy of the laboratory to maintain a reserve of equipment to expedite deliveries to the field.

4. Due to wartime conditions, a period of several months was required to obtain materials. During this delay a crane borrowed from the Denver office of the Geological Survey was studied with the object of making improvements. A set of jigs was made which would permit speedy construction of the five cranes ordered and any others needed in the future. Through this preliminary preparation, the cranes were built without incident once the material arrived, and the three ordered by the Central Valley Project shipped to their destination.

5. New drawings were prepared, figures 3, 4, and 5, because a number of minor changes were made to improve the design. The purpose of these changes was to simplify construction, permit the crane to fold into a more compact bundle, and to make it work better. The revisions included:

a. Reduce several members from 3/16-inch to 1/8-inch angles, when a load on the crane borrowed from the Geological Survey indicated that the latter were sufficient.

b. The main strut, mark 1 of figure 3, originally consisted of two separate members bolted together, to permit folding of the crane. The necessity of two members was eliminated by changing the connector, mark 29, from an L to a T-shape.

c. This revision to the connector, mark 29, also permitted the strut mark 4, to fold closer to the main strut.

d. To further facilitate folding, the tension member, mark 10 and 11, was reversed, and the bar, mark 11, was bent at 8-1/2 degrees as shown.

e. The center wheel, mark 48, on the struts, mark 2, did not fold properly, and at the same time the wheel at the end of the boom prevented the bar, mark 8 from dropping into place when folded. Notches in the angle, mark 3, and plate, mark 20, corrected both conditions.

f. The size of the plate, mark 22, was reduced by using a flat-headed, insulated connection as shown in detail A.

g. Action of the spreader, mark 42, was considerably improved by cutting a 30-degree bevel on the spreader ends, and bushing the hole with a brass sleeve (see detail in figure 5).

h. The use of the crane in the field was hampered by a tendency of the connection at the crown to open when the crane was being moved. This condition was alleviated by changing the direction of the slot in mark 2, modifying the slot in mark 25 and providing the clamp mark 30.

- - -

Figure 1

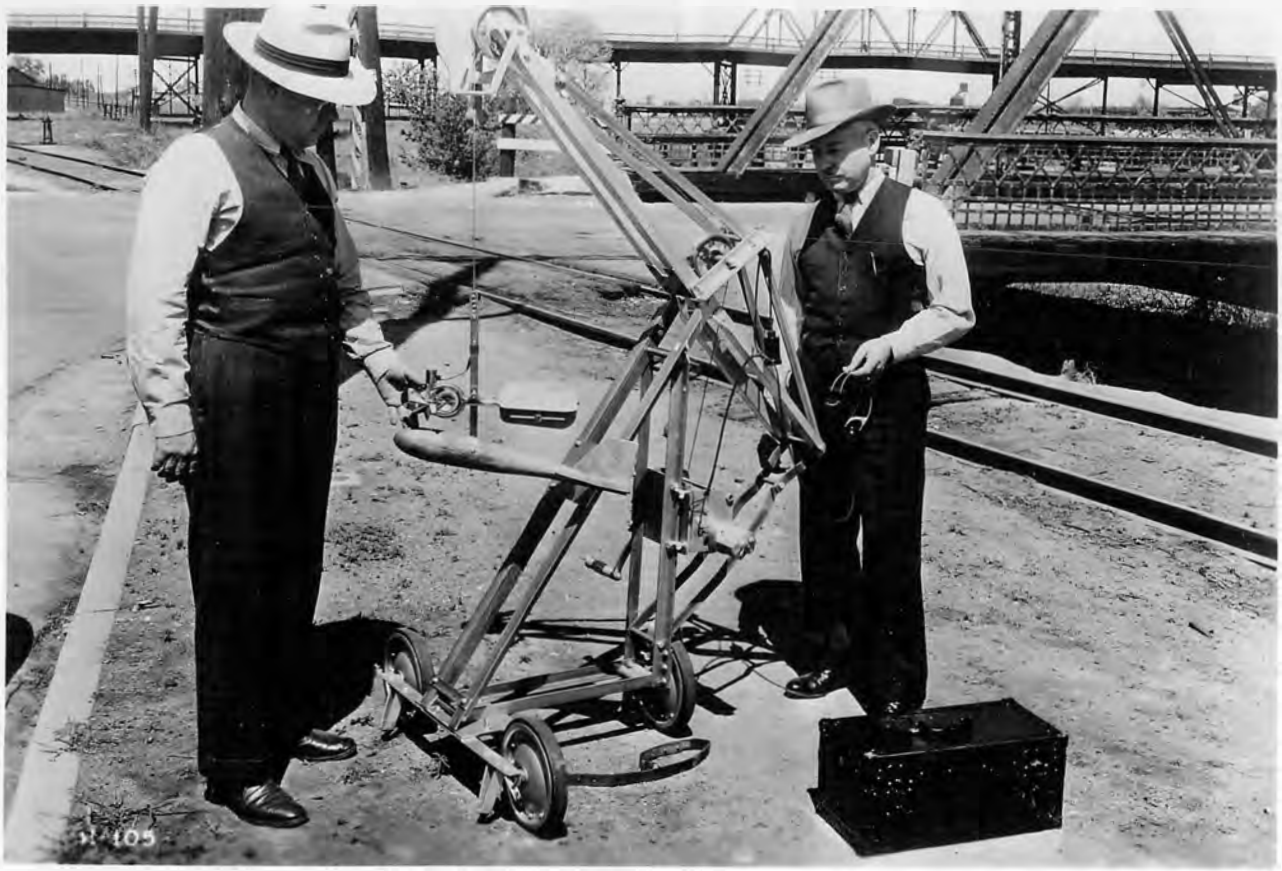

A. Crane and current meter assembly.

B. Crane leaning against bridge rail.

THE TYPE A CRANE

Figure 2

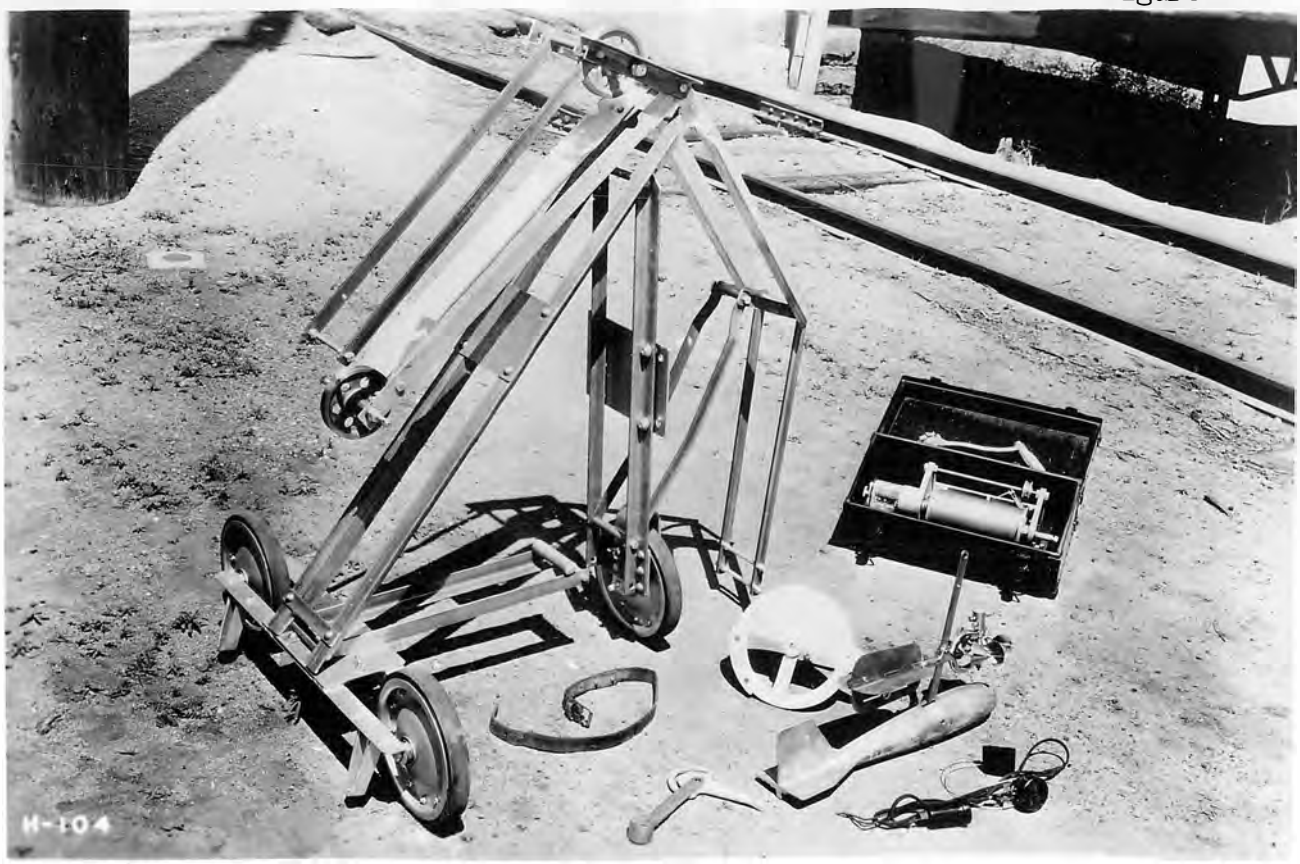

A. Current meter, weight, reel, and protractor removed, and crane partially folded.

B. **Crane folded, wheels removed. Crane ready for transportation.**

TYPE A CRANE FOLDED FOR TRANSPORTATION OR STORAGE

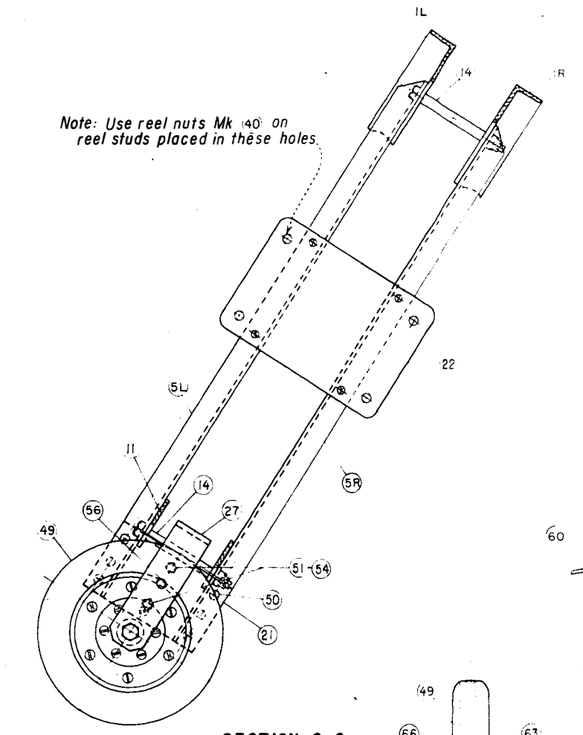

SECTION C-C

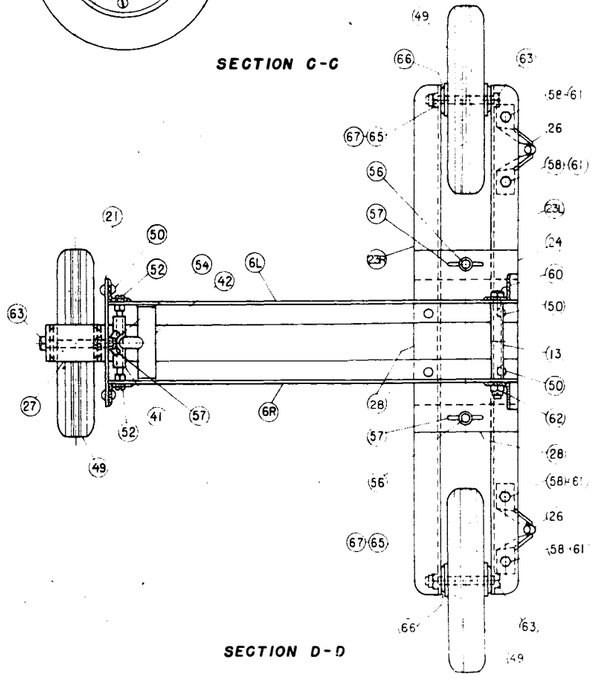

SECTION D-D

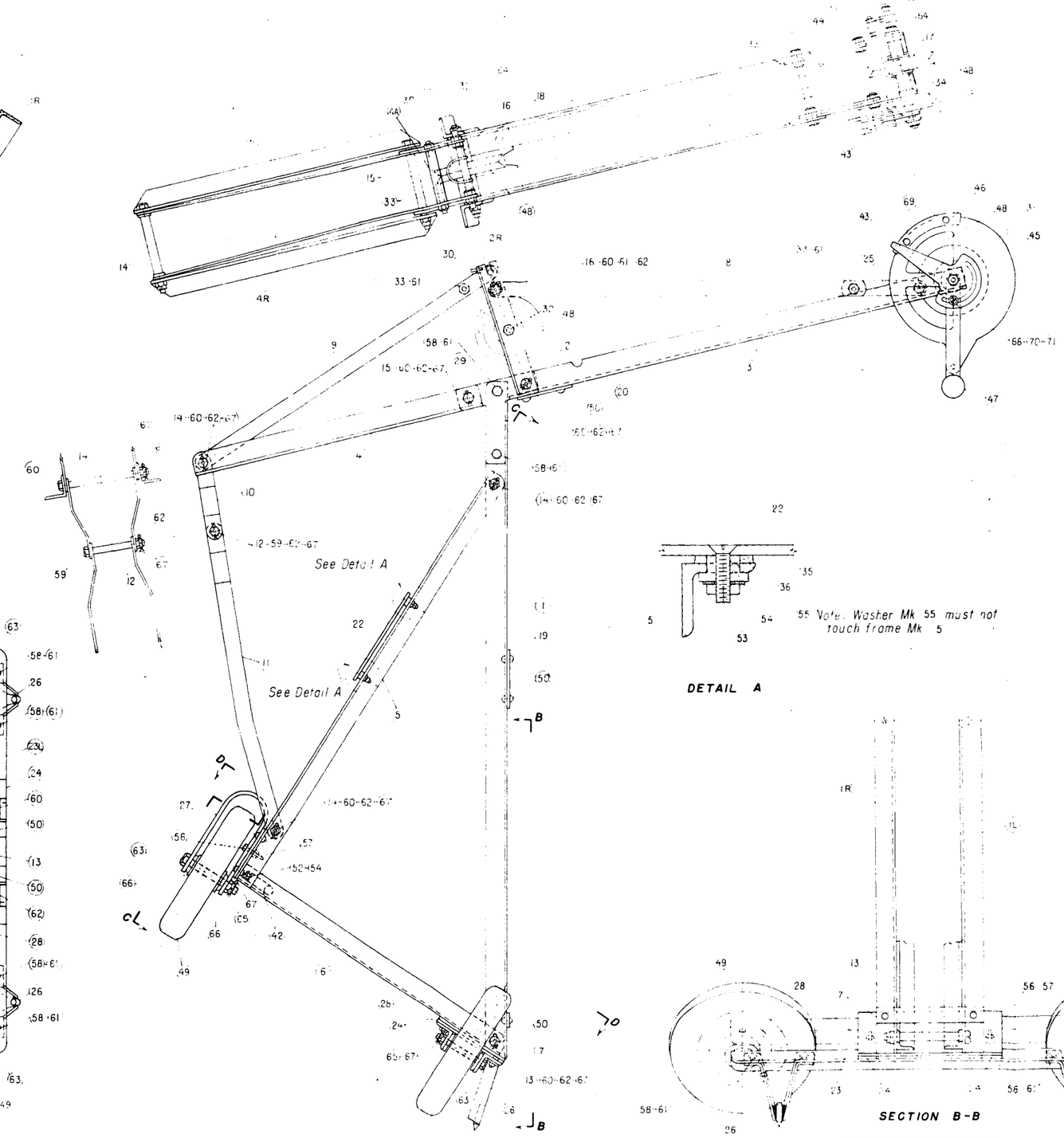

55 Note: Washer Mk 55 must not touch frame Mk 5

DETAIL A

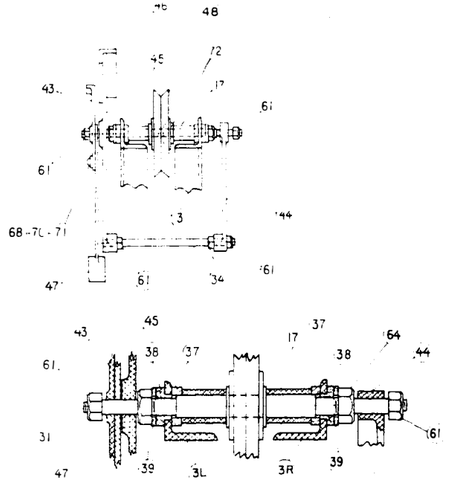

DETAIL OF SHEAVE INSULATION

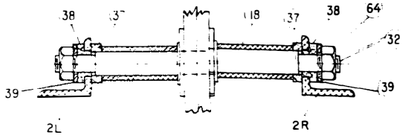

DETAIL OF SHEAVE INSULATION

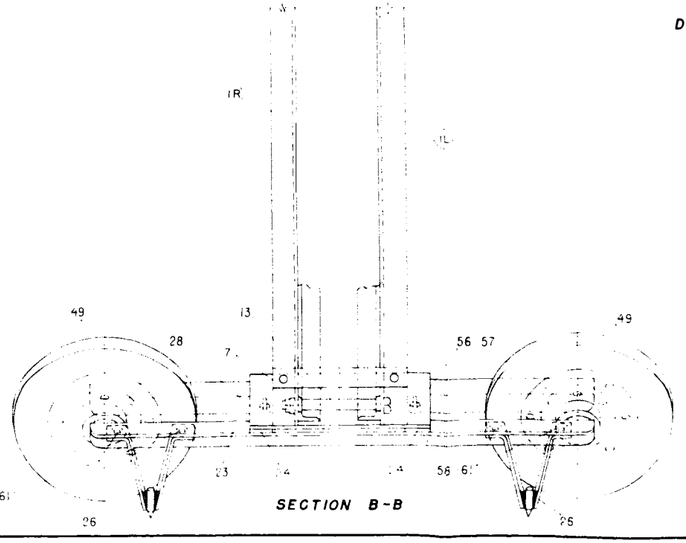

SECTION B-B

This crane was designed by the
U.S. Engineer Office, Cincinnati, Ohio
U.S. Geological Survey, Columbus, Ohio
January 1939 - as shown on drawings of Geological Survey, File No 8-1-1 to 8-1-5.
Minor revisions were made by the Hydraulic Laboratory of the Bureau of Reclamation - July 1945.

UNITED STATES
DEPARTMENT OF THE INTERIOR
BUREAU OF RECLAMATION
DENVER OFFICE

STREAM GAGING EQUIPMENT
TYPE "A" CRANE
ASSEMBLY

REV 11-14-47

DRAWN
TRACED
CHECKED
RECOMMENDED
APPROVED

DESIGNED UNDER DIR.
SHEET OF

40-D-3786

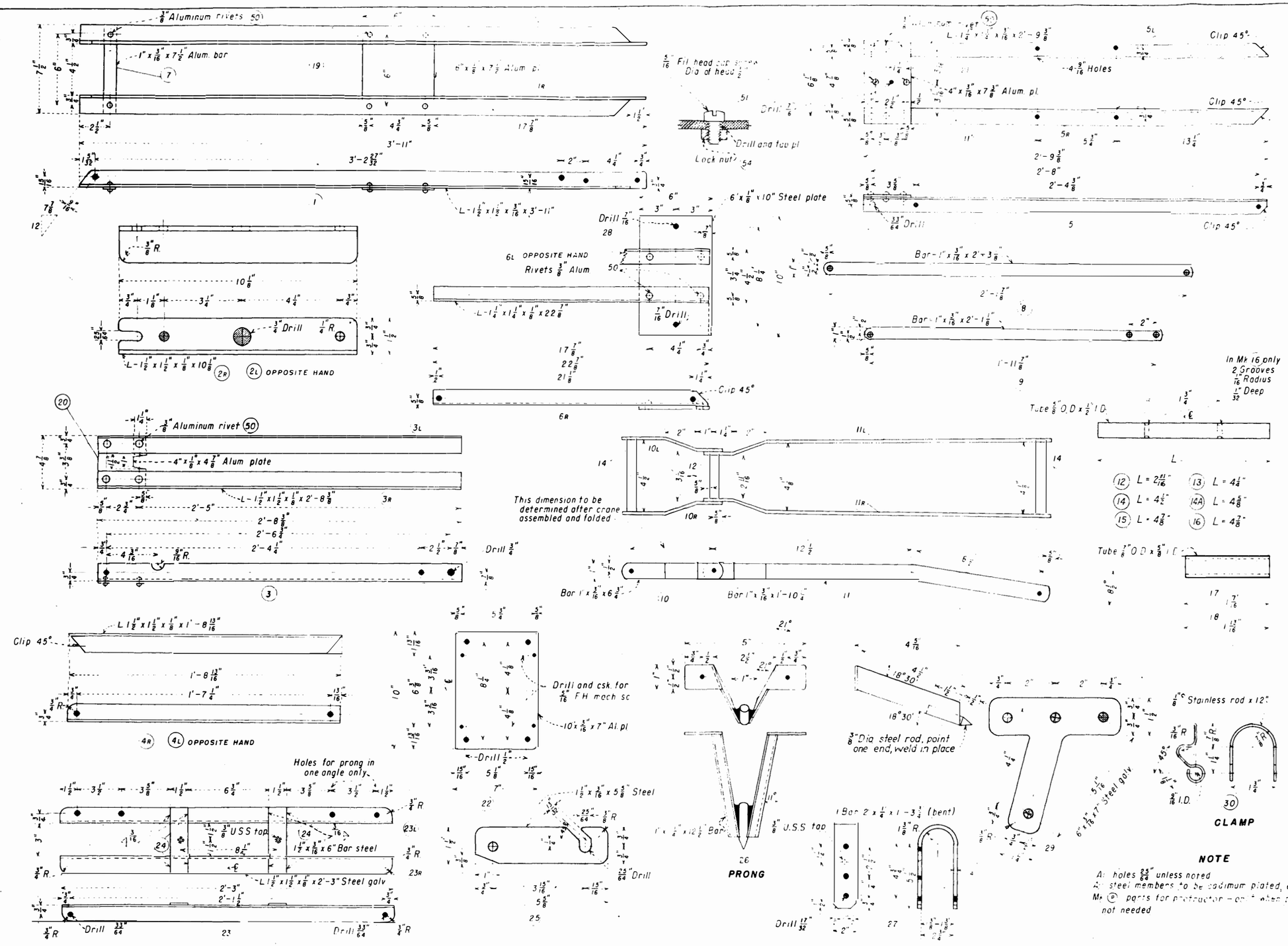

LIST OF MATERIALS

MARK	DESCRIPTION	MATERIAL	NO REQ'D	ORDER
1	Angle 1" x 1 1/2" x 3/16" x 3'-11"	24 S.T. Alum	2	
	Angle 1 1/2" x 1 1/2" x 3/16"	"		1-8 Ft
2	Angle 1 1/2" x 1 1/2" x 1/8" x 10 1/8"	"	2	
3	Angle 1 1/2" x 1 1/2" x 1/8" x 2'-8 3/8"	"	2	
4	Angle 1 1/2" x 1 1/2" x 1/8" x 1'-8 13/16"	"	2	
	Angle 1 1/2" x 1 1/2" x 1/8"	"		1-11 Ft
5	Angle 1 1/4" x 1 1/4" x 3/16" x 2'-9 3/8"	"	2	
	Angle 1 1/4" x 1 1/4" x 3/16"	"		1-6 Ft
6	Angle 1 1/4" x 1 1/4" x 1/8" x 1'-10 7/8"	"	2	
	Angle 1 1/4" x 1 1/4" x 1/8"	"		1-4 Ft
7	Bar 1" x 3/16" x 7 1/2"	"	1	
8	Bar 1" x 3/16" x 2'-3 1/8"	"	2	
9	Bar 1" x 3/16" x 2'-1 7/8"	"	2	
10	Bar 1" x 3/16" x 6 3/4"	"	2	
11	Bar 1" x 3/16" x 1'-10 1/4"	"	2	
	Bar 1" x 3/16"	"		2-8 Ft
12	Tube 5/8" O.D. x 1/2" I.D. x 2 11/16"	"	1	
13	Tube 5/8" O.D. x 1/2" I.D. x 4 1/4"	"	1	
14	Tube 5/8" O.D. x 1/2" I.D. x 4 1/2"	"	3	
15	Tube 5/8" O.D. x 1/2" I.D. x 4 7/8"	"	1	
16	Tube 5/8" O.D. x 1/2" I.D. x 4 7/8"	"	1	
	Tube 5/8" O.D. x 1/2" I.D.	"		1-3 Ft
17	Tube 7/8" O.D. x 5/8" I.D. 1 7/16"	"	2	
18	Tube 7/8" O.D. x 5/8" I.D. 1 13/16"	"	2	
	Tube 7/8" O.D. x 5/8" I.D.	"		1-1 Ft
19	Plate 1/8" x 6" x 7 1/2"	"	1	
20	Plate 1/8" x 4" x 4 7/8"	"	1	
	Plate 1/8" x 6" x 12"	"		1
21	Plate 3/16" x 4" x 7 3/8"	"	1	
22	Plate 3/16" x 7" x 10"	"	1	
	Plate 3/16" x 10" x 12"	"		1
23	Angle 1 1/2" x 1 1/2" x 1/8" x 2'-3"	Mild steel	2	
	Angle 1 1/2" x 1 1/2" x 1/8"	"		1-5 Ft
24	Bar 1 1/2" x 3/16" x 6"	"	2	
25	Bar 1 1/2" x 3/16" x 5 5/8"	"	2	
	Bar 1 1/2" x 3/16"	"		1-2 Ft
26	Bar 1" x 1/4" x 12 1/2"	"	2	
	Bar 1" x 1/4"	"		1-2 1/2 Ft
27	Bar 2" x 1/4" x 1'-3 3/4"	"	1	
	Bar 2" x 1/4"	"		1-1 1/2 Ft.
28	Plate 1/4" x 6" x 10"	24 S.T. Alum.	1	
	Plate 1/4" x 6" x 10"	"		1
29	Plate 3/16" x 6" x 7"	Mild steel	2	
	Plate 3/16" x 6" x 14"	"		1
30	Rod 1/8" ○ x 12"	Stainless steel	1	
	Rod 1/8" ○	"		1-1 Ft
31	Rod 5/8" ○ x 9"	C.R. steel	1	
32	Rod 5/8" ○ x 7 1/4"	"	1	
	Rod 5/8" ○	"		1-1 1/2 Ft
33	Rod 3/8" ○ x 6"	"	3	
34	Rod 3/8" ○ x 7"	"	1	
	Rod 3/8" ○	"		1-2 1/2 Ft
35	Washer 1" ○ x 1/8"	FIBRE OR BAKELITE LINEN IMPREGNATED ROD	4	
36	Washer 1" ○ x 7/16"		4	
37	Washer 1" ○ x 1/4"	"	4	
38	Washer 1" ○ x 27/64"	"	4	
	Rod 1" ○	"		1-1 Ft
39	Washer 1" ○ x 1/16"	Brass	4	
40	Reel nut 1" ○ x 3/4"	"	4	
	Rod 1" ○	"		1-1/2 Ft
41	Tube 3/8" O.D. x 1/64" wall x 3"	"	1	1-1/4 Ft.
42	Spreader	Alum Casting	1	1
(P) 43	Pointer	"	1	1
(P) 44	Shaft arm	"	1	1
(P) 45	Protractor body	"	1	1
(P) 46	Scale	"	1	1
(P) 47	Pendulum	Red brass	1	1
48	Wheel	"	2	2
14A	Tube 5/8" O.D. x 1/2" I.D. x 4 5/8"	24 S.T. Alum.	1	

Details on sheet 3

Continued on sheet 3

UNITED STATES
DEPARTMENT OF THE INTERIOR
BUREAU OF RECLAMATION
DENVER OFFICE

STREAM GAGING EQUIPMENT

TYPE "A" CRANE STRUCTURAL DETAILS

REV 11-14-47

DRAWN F.C.L. SUBMITTED
TRACED W.A.P. RECOMMENDED
CHECKED APPROVED

DENVER, COLORADO
SHEET 2 OF 3

40-D-3787

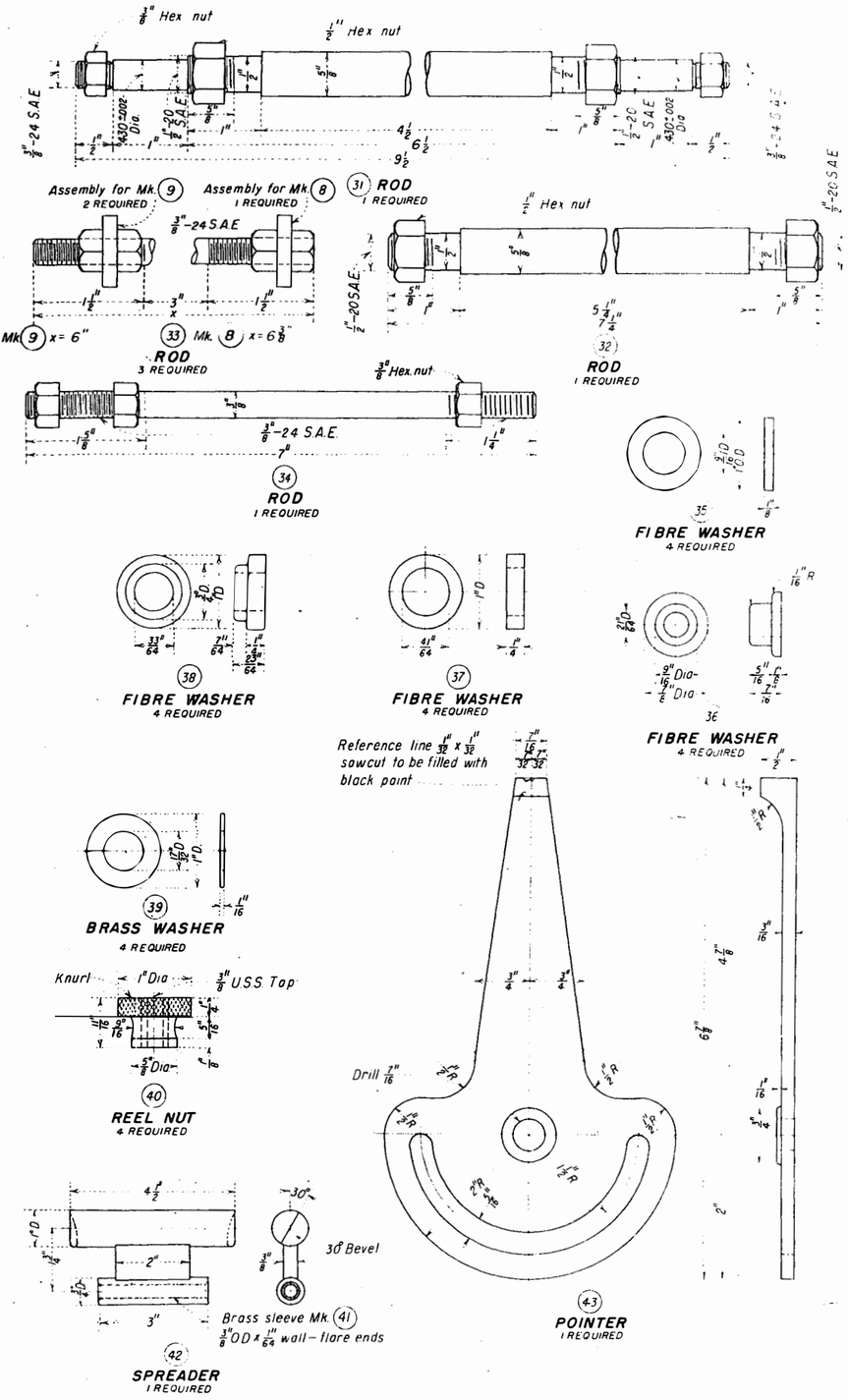

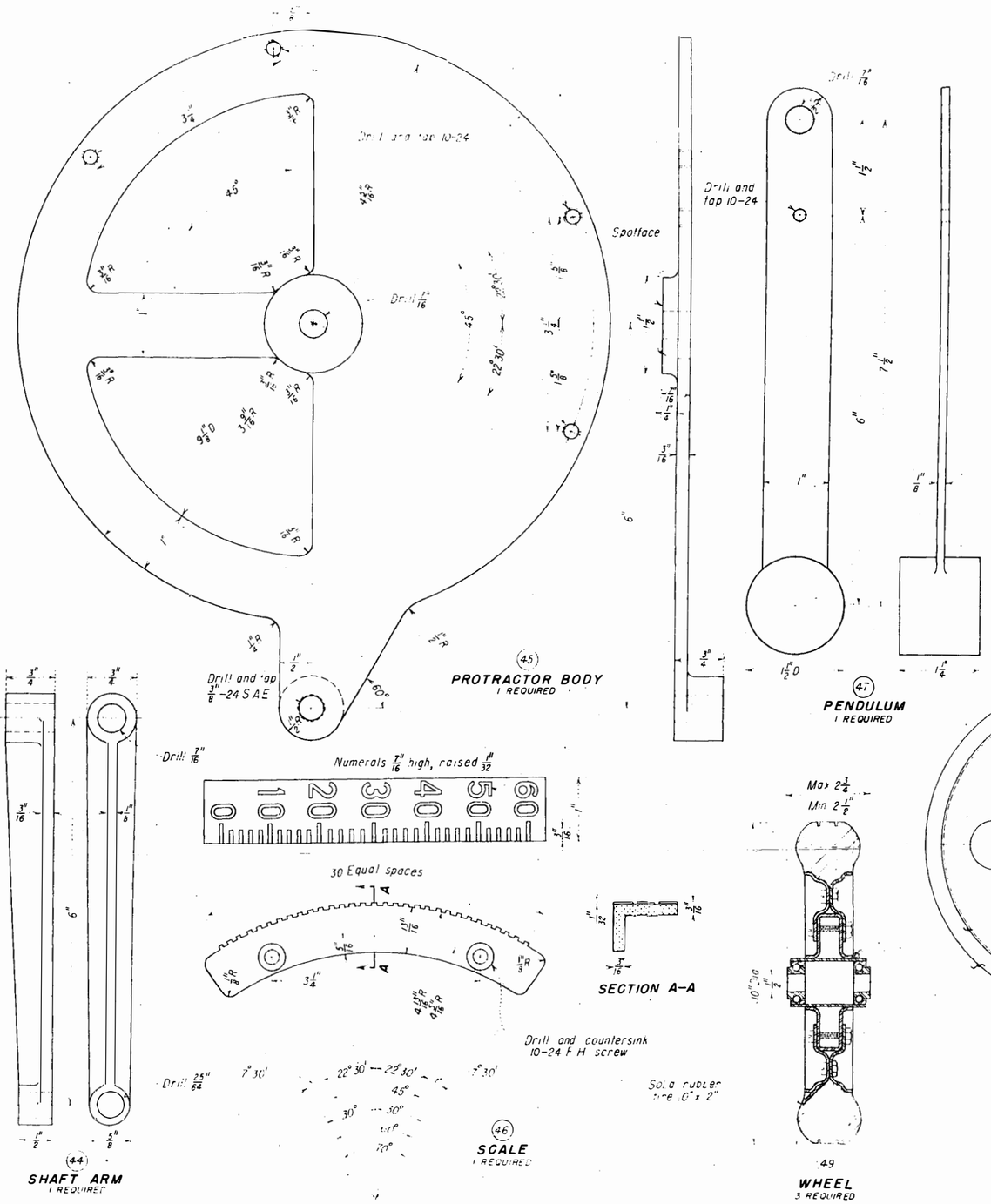

LIST OF MATERIALS (Continued)

MARK	DESCRIPTION	MATERIAL	NO REQD	ORDER
49	Tire 10"x2, 2 1/2" hub, 1/2" Dia shaft, solid rubber wheel		3	3
51	1/8" x 3/8" Round head rivets	Aluminum	20	20
51	5/16" x 1/2" USS Fil. Hd Mach screw, 1/2" Dia Hd	Steel	2	2
52	5/16" x 1/2" USS Fill. Hd Mach screw, 1/2" Dia Hd	..	2	2
53	5/16" x 1" USS Flat Hd Mach screw	..	4	4
54	5/16" USS Hex Hd nut	..	8	8
55	1/4" Std washer	..	4	4
56	3/8" x 1" USS Hex Hd Mach screw	..	3	3
57	3/8" USS wing nut	..	3	3
58	3/8" x 3/4" SAE Hex Hd Mach screw	..	10	10
59	3/8" x 4" SAE Hex Hd Mach screw	..	1	1
60	3/8" x 6" SAE Hex Hd Mach screw	..	7	7
61	3/8" SAE Hex Hd nut	..	27	27
62	3/8" SAE Castle nut	..	8	8
63	1/2" x 4" SAE Hex Hd Mach screw	..	3	3
64	1/2" SAE Hex Hd nut	..	4	4
65	1/2" SAE Castle nut	..	3	3
66	1/2" Std washer	..	16	16
67	1/16" x 3/4" Cotter pin	..	11	11
(P) 68	10-24 x 1/2" Round Hd Mach screw	Brass	1	1
(P) 69	10-24 x 1/2" Flat Hd Mach screw	..	2	2
(P) 70	No 10 Washer	..	1	1
(P) 71	1/4" Std washer	..	1	1
72	Ball bearing, N D 88016 (or equal)	Steel	4	4

(P) Parts for protractor – Omit when protractor not needed

All steel members to be cadmium plated except Mk 30

UNITED STATES
DEPARTMENT OF THE INTERIOR
BUREAU OF RECLAMATION
DENVER OFFICE

STREAM GAGING EQUIPMENT
TYPE "A" CRANE
MECHANICAL DETAILS

DRAWN	F.C.L.	SUBMITTED	
TRACED	H.V.M.	RECOMMENDED	
CHECKED		APPROVED	

DENVER, COLORADO
SHEET 3 OF 3

REV. 11-14-47

40-D-3788