ASCE PROCEEDINGS
Vol. 71, No. 7 Sep. Sec. 5

EXPERIENCES OF THE BUREAU OF RECLAMATION

By Jacob E. Warnock,[4] M. Am. Soc. C. E.

Synopsis

With the trend to larger and larger hydraulic structures, cavitation and the resultant pitting has become a major problem to the hydraulic designing engineer. Subatmospheric pressures in smaller structures were of little consequence, but with the increase of head in more recent structures, the approach of subatmospheric pressures to absolute zero as their limit has created previously unheard of situations. Experience in the laboratory and in the field shows that prevention of cavitation is fundamentally a function of design.

Introduction

Pitting due to cavitation is not new to the Bureau of Reclamation, U. S. Department of the Interior. Trouble was experienced as far back as 1910–1920 in outlet works, but recent examples have been more severe in extent due to the increased head. In discussing the arrangement and design of outlet works, J. M. Gaylord and J. L. Savage, Hon. M. Am. Soc. C. E. (25), in 1923 stated that "Most of the difficulties with outlets built by the Bureau of Reclamation can be attributed to the effects of vacuum in the conduits below the regulating devices." However, it was not until recently that pitting has appeared on the surfaces of water passages normally considered to be open channels. Two examples of conduit flow are described herewith—the needle valves at Boulder Dam (Arizona-Nevada) which discharge into the atmosphere, and the balanced valve outlets at Shoshone Dam (Wyoming) which discharge into short conduits. Two examples of pitting in open channels are also shown—in the Arizona spillway tunnel at Boulder Dam and on the spillway pier faces at Parker Dam, both on the Colorado River.

The remedial measures in each case were made possible by laboratory studies. In fact, the occurrence of cavitation and pitting in the large hydraulic structures constructed in recent years would be more prevalent were it not for the availability of hydraulic laboratory facilities. A careful exploration of the pressures within a model can detect those conditions which, when transferred to a prototype structure, will cause the intermittent subatmospheric pressures producing cavitation. At one stage in the design of the spillway for Grand Coulee Dam (26), in Washington, a dentated lip at the downstream end of the apron eliminated the impingement of the high-velocity flow directly on the river bed downstream from the apron, reduced the scouring effect of the turbulent flow, and materially reduced the roughness of the water surface in the stilling pool. Minute examination of the pressures on the faces of the dentates in a

[4] Hydr. Engr., U. S. Bureau of Reclamation, Denver, Colo.

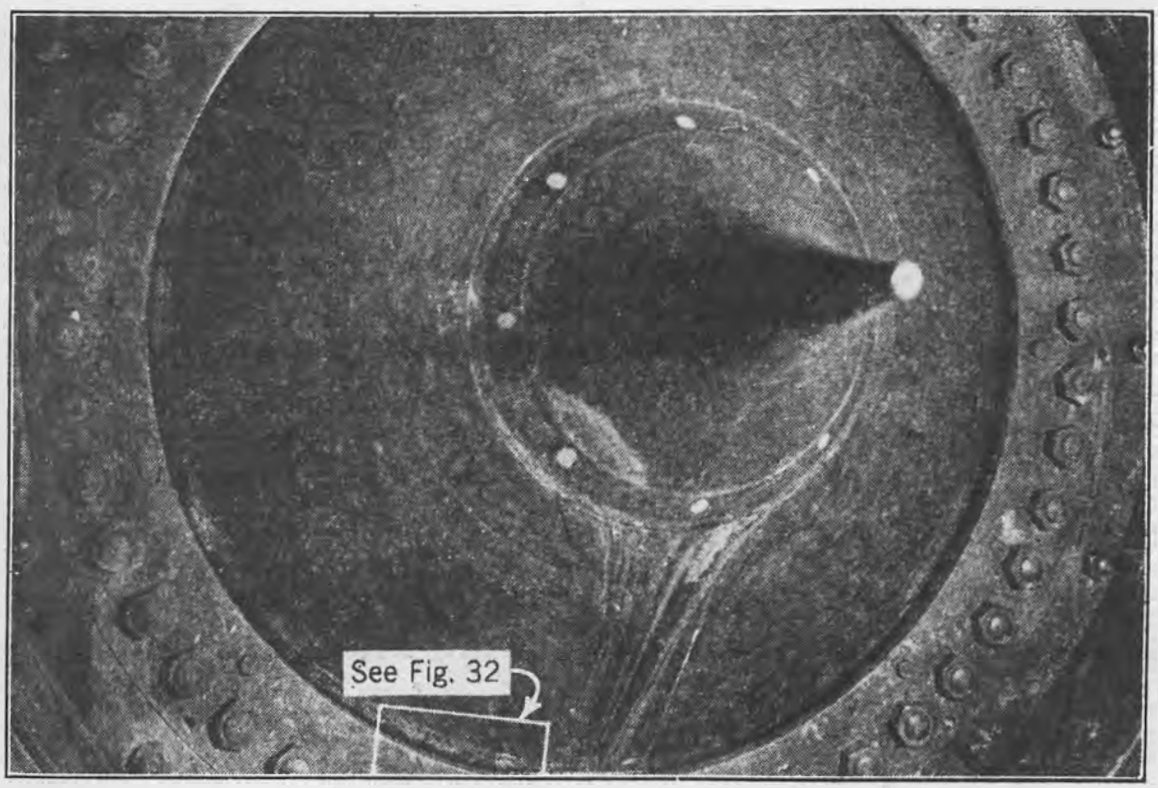

FIG. 31.—PITTING OCCURS AROUND THE PERIPHERY OF A LARGE NEEDLE VALVE, IMMEDIATELY BELOW REGIONS OF SUBATMOSPHERIC WATER PRESSURES

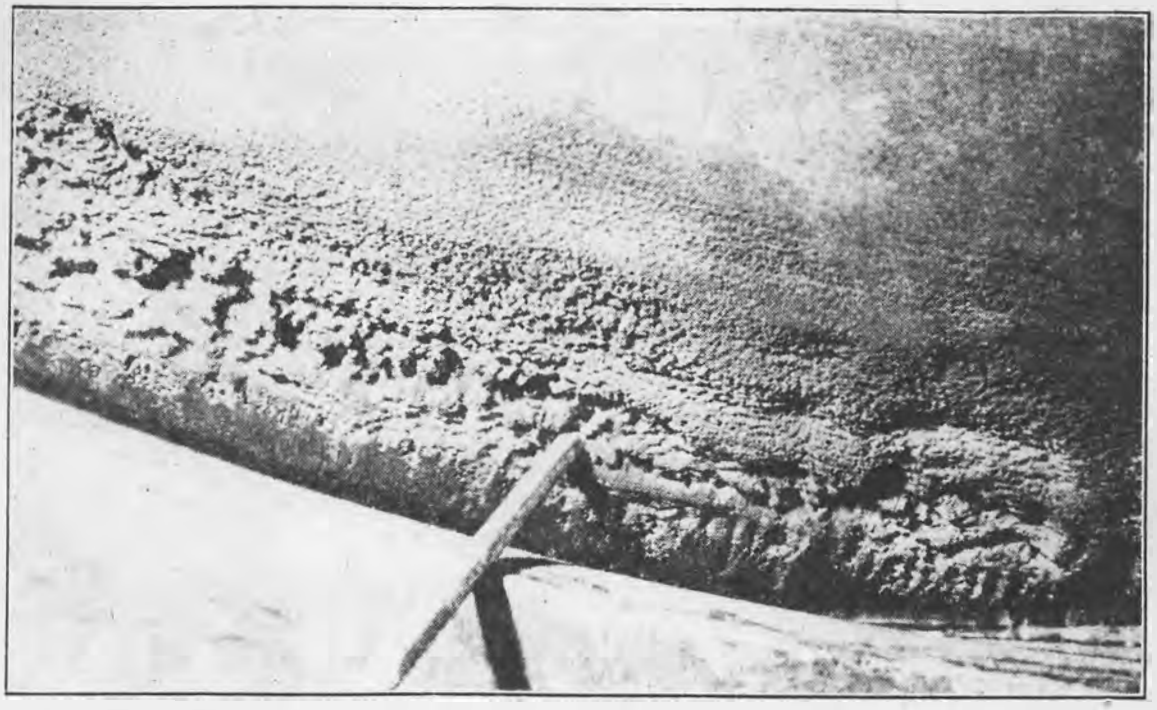

FIG. 32.—ENLARGED VIEW OF SECTION IN FIG. 31 EMPHASIZES THE SEVERE PITTING ON THE SHOULDER OF THE NEEDLE VALVE WHICH REQUIRES EXPENSIVE MAINTENANCE BY WELDING

1 : 40 model and a 1 : 15 model showed that cavitating pressures would occur in the prototype which would have destroyed the piers in a very short time. This condition was the principal factor in continuing the laboratory studies which resulted in the adoption of the bucket type of energy dissipator.

The destruction of the conduit roof in the outlets at Madden Dam, on the Chagres River in the Isthmus of Panama, by pitting from cavitation was the incentive for a complete model study of the outlets (27) for Grand Coulee Dam. Aside from the criterion of efficiency, the emphasis throughout the tests was to prevent pressures from occurring at any point in the conduit which would cause cavitation. One of the early designs of the upper and intermediate outlets showed subatmospheric pressures of such intensity that, had the design been constructed, cavitation would, without doubt, have been so severe as to hamper, if not completely prevent, successful operation. In the original design the fact was overlooked that the frictional forces in the sloping conduit were insufficient to overcome the accelerating force due to gravity, a condition which became readily apparent in the experimental studies.

There was a period prior to the Madden Dam incident when it was difficult to demonstrate that cavitation and pitting could occur in a hydraulic structure in the same manner as it has occurred in hydraulic machinery such as marine propellers, turbines, and pumps. With the experiences at Madden Dam and in certain Bureau structures, augmented by laboratory investigations, the importance of this cavitation problem is fully recognized by Bureau engineers.

The Gaylord-Savage report (25) describes outlet structures and recounts the difficulties experienced in the excessive maintenance due to damage from cavitation. Although the theory of cavitation at that time differed materially from the current conception, the adverse condition was even then associated with extreme subatmospheric pressures. It was realized that the erosion or pitting was an action accompanying subatmospheric pressures, but the cause was not completely understood. At first the pitting was believed to be a direct result of the making and breaking of the vacuum in the immediate vicinity.

As is now the case, one of the most practical remedies applied to the discharge conduits installed in early periods was the introduction of air immediately below the regulating device. Air was admitted to the discharge conduit in a number of instances during the first years of operation, but, in the light of air-requirement tests made in recent years on both model and prototype structures, it is doubtful if the air supply in most cases was either adequate or properly installed. The location of the air inlets in the conduits is often more important than the size. Thus, improper location might have been one of the main factors contributing toward failure of some of the early systems.

Streamlining the needle tips is considered the only practicable means of eliminating damage to this part of the valve; however, damage could be reduced to a minimum by restricting the valve operation to noncritical openings determined by detailed pressure measurements on the prototype or by model tests, or both.

Damage to Needle Valves

Initial operation at Boulder Dam and Alcova Dam, in Wyoming, produced severe erosion of the needle valves in the outlet structures which was expensive to maintain, since the valves were not readily accessible. The type of damage is shown on the needle in Figs. 31 and 32. In this case, the damage was produced in a relatively short time. Detailed records are not available, but the time was probably about one month at the one-half open position with a head of 145 ft.

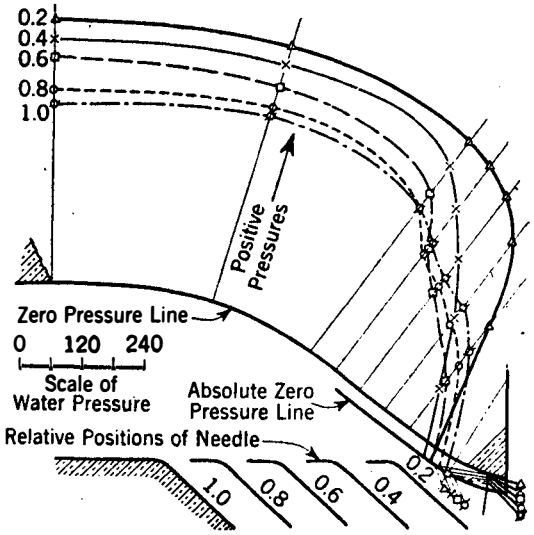

Fig. 33.—Pressure Distribution on the Nozzle of a 72-In. Needle Valve (Head, 516 Ft) Shows Regions of Low Pressure Which Correlate Perfectly with the Occurrence of Pitting

Piezometers installed in the nozzle of one of the 72-in. valves at Boulder Dam showed pressures near absolute zero in a zone (Fig. 33) immediately upstream from the region of erosion or pitting throughout the entire range of the valve. Since the installation of pressure equipment in one of the 72-in. needles would have been intricate, a homologous needle valve with an exit diameter of 5 in. was installed for testing in one of the tunnel-plug outlets at Boulder Dam. The pressure distribution on the needle and nozzle is shown in Fig. 34 for various openings of the valve under a constant head of 150 ft.

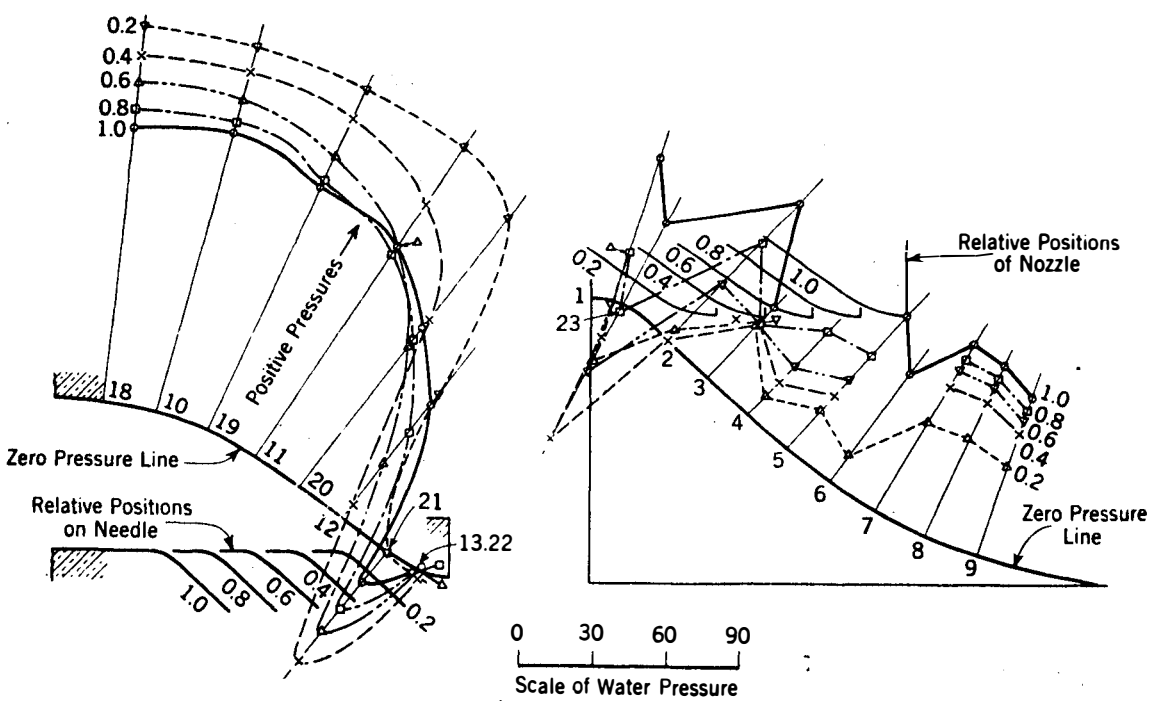

Fig. 34.—Detail Data from Extensive Tests of a 5-In. Scale-Model Needle Valve Further Confirm the Pressure Measurements and Pitting Observed on the Prototype

In general, the pressure conditions were most critical at a valve opening of approximately 40%. The results of a wear test (Fig. 35) are shown after six

days of operation under a total head on the valve of 460 ft with the valve opening of 40%—the severest condition.

A number of designs were studied in the laboratory using the same 5-in. valve and a design was developed which produced positive pressures at all valve openings and at all heads. This design, when subjected to a wear test, under the same conditions as the original design (except at an opening of 20%, the opening at which the severest conditions occurred), showed no sign of pitting on the needle after eighty-four days of operation (Fig. 36).

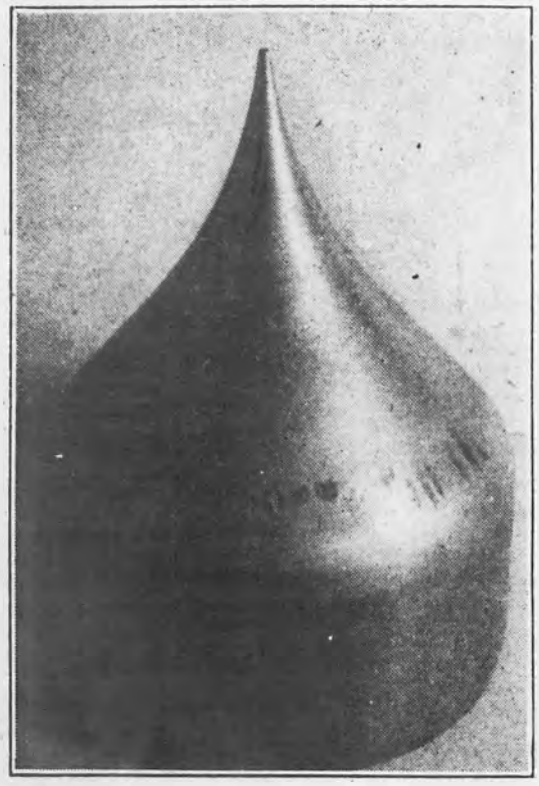

FIG. 35.—PITTING ON THE NEEDLE OF A 5-IN. VALVE, ACCORDING TO THE ORIGINAL DESIGN, AFTER SIX DAYS OF OPERATION (40% OPENING AND H = 460 FT)

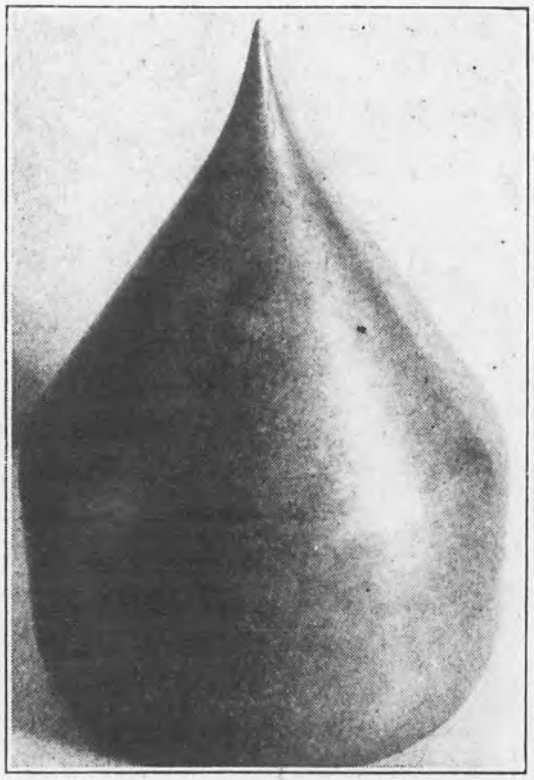

FIG. 36.—ABSENCE OF PITTING ON THE NEEDLE OF A 5-IN. VALVE, ACCORDING TO THE IMPROVED DESIGN, AFTER 84 DAYS OF OPERATION (20% OPENING AND H = 460 FT)

The original design of nozzle had an expanding water passage which tended to lower the velocity and cause a regain of velocity head. This yielded a higher discharge but created low-pressure areas in the valve. When forces in the low-pressure areas were of sufficient intensity, they produced cavitation with the accompanying pitting.

From the high-head studies of the 5-in. valve, certain specifications were developed to maintain positive pressures on the needle and nozzle of the valve at all openings. The angle between the needle and the nozzle must not be divergent in the direction of flow. The needle and nozzle profiles may be parallel and still maintain positive pressures, but a convergence of one to three degrees is preferable. The seat must be on the tangent portion of the needle; that is, the base diameter of the needle cone must be slightly larger than the outlet diameter of the nozzle. The valve nozzle should have no point of inflection; it should have a sharp edge to maintain the minimum section at

the outlet of the valve nozzle and should permit free access of air to the jet at the point of emergence.

The high-head studies on the 5-in. valve gave positive proof that the 72-in. valves were pitted by cavitation and that elimination of the severe subatmospheric pressures causing the cavitation was possible by the redesign of the hydraulic passages of the valve. In eliminating the low pressure by using a sharp-edged nozzle in the improved design the discharge capacity was reduced.

Using a 6-in. valve equipped with piezometric taps throughout the profile of the needle and the nozzle, the design was altered further by increasing the outlet and equatorial diameter and the needle travel until a combination was found in which the cavitating pressures were absent over the entire range of valve opening (Fig. 37) and the discharge capacity was comparable to that of the original valve.

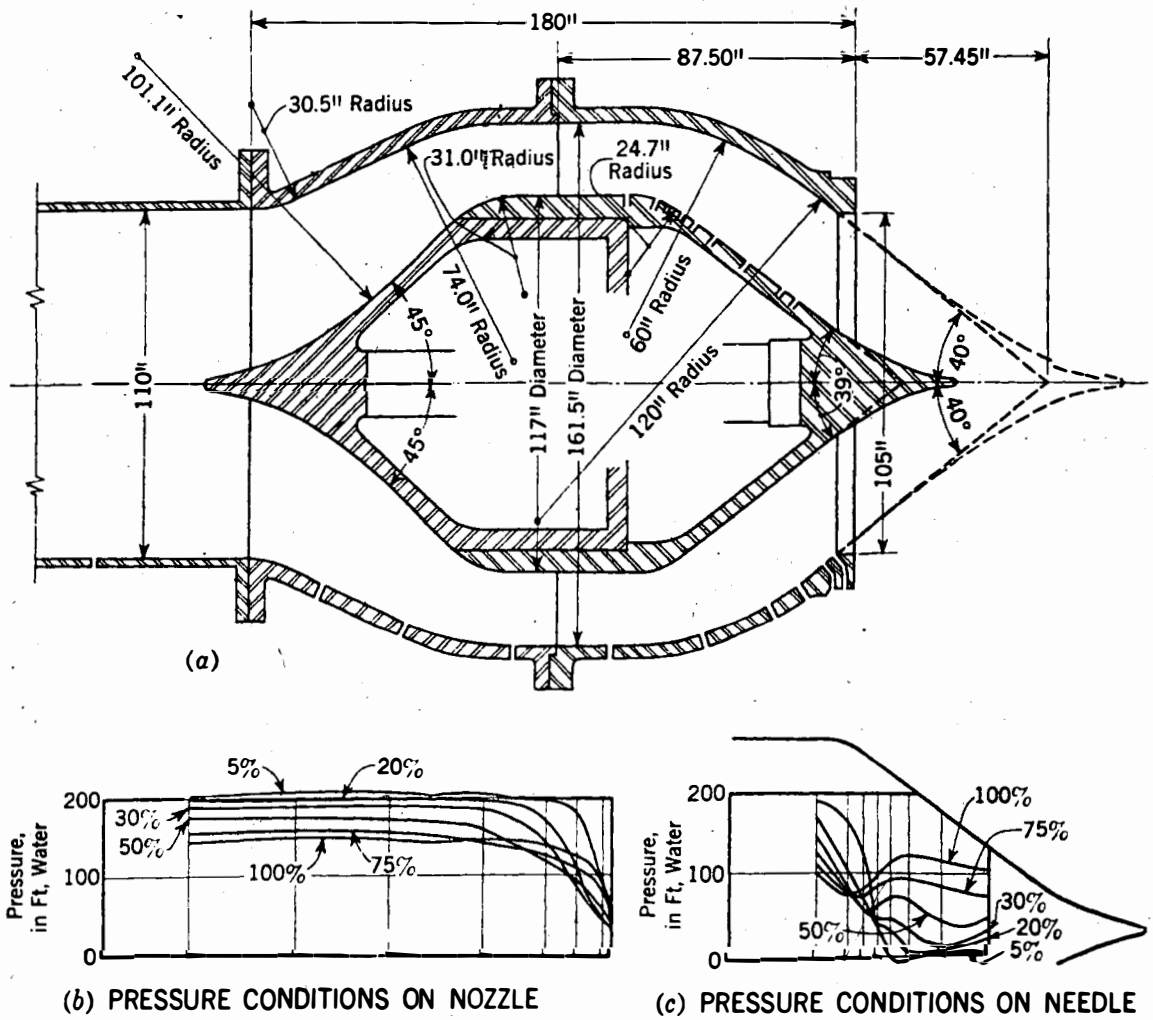

FIG. 37.—COMPLETE ABSENCE OF CAVITATING PRESSURES ON THE NEEDLE AND THE NOZZLE OF A NEW DESIGN OF NEEDLE VALVE, AS DETERMINED FROM A 6-IN. MODEL

Although the new design has not been used in a field structure, the satisfactory operation of the 5-in. valve with positive pressures throughout, under a head of 460 ft for eighty-four days, indicates similar satisfactory operation in a larger valve of the new design. As designed for Friant Dam in California, the

valve in Fig. 37 has an inlet diameter of 110 in. and an outlet diameter of 105 in.

Subsequently, sharp-edged nozzles were installed on certain valves at Boulder Dam and the pressure results show a marked improvement in distribution (Fig. 38). Field reports indicate a minimizing of pitting on those valves so equipped. Operation of the valves with the original nozzle shape at openings where the subatmospheric pressures were less severe, as indicated by model tests, has also tended to reduce the amount of pitting.

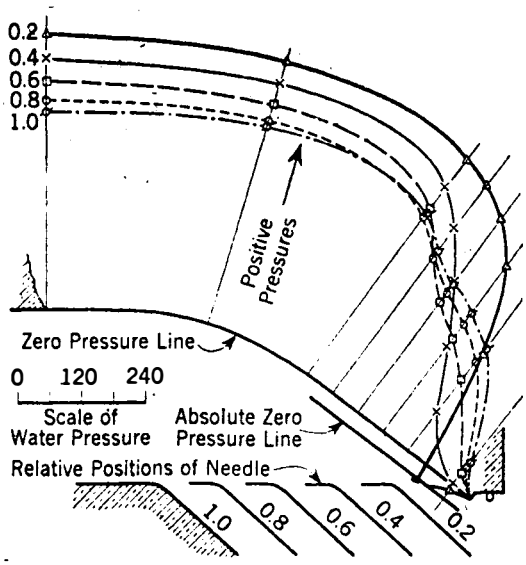

FIG. 38.—PRESSURE DISTRIBUTION ON THE NOZZLE OF THE 72-IN. NEEDLE VALVES AT BOULDER DAM, WITH REVISED PROFILE OF NOZZLE

SHOSHONE DAM BALANCED VALVES

The 58-in. balanced valves in the lower outlet tunnel in the south canyon wall at Shoshone Dam, near Cody, Wyo., were installed in May, 1915. Although this type of valve had already required considerable maintenance in the installations at Roosevelt Dam, in Arizona, and Pathfinder Dam, in Wyoming, it was adopted because of the lack of a better design.

The valves were in operation only a few seasons when it became evident that seasonal maintenance similar to that at the older installations would be required. Pitting of the downstream faces of the valve needles and severe damage to the discharge conduit walls immediately below the valves occurred during extended periods of operation. Patching with various materials or filling the pitted areas by arc-welding with different metals was of no avail. With few exceptions the patches eroded more rapidly than the parent metal.

In 1930–1931, an attempt was made to relieve the Shoshone situation by installing twenty-four 2-in. pipes and an 8-in. air duct below each valve (Fig. 39(*a*)). A marked increase in the intensity of the noise accompanying the discharging water resulted, and the experiment was considered unsuccessful. Because of the failure of the vent system, resort was made to the original method of maintenance and the valves were used as little as possible. The pitting was serious and the repairs inadequate, but a more practical method of repair was not apparent.

During the season of 1942, the valves at Shoshone were operated at almost full capacity over an extended period in order to regulate flood flow and prevent crop damage downstream. Damage to the outlet structure was severe and maintenance measures became critical.

The concrete for several feet downstream from the metal lining in each conduit had been eroded severely and most of the twenty-four 2-in. pipes embedded in the conduit during the 1931 revision had been torn out in the eroded area (Fig. 40(*a*)). The "semi-steel" (high-test gray iron) conduit liner

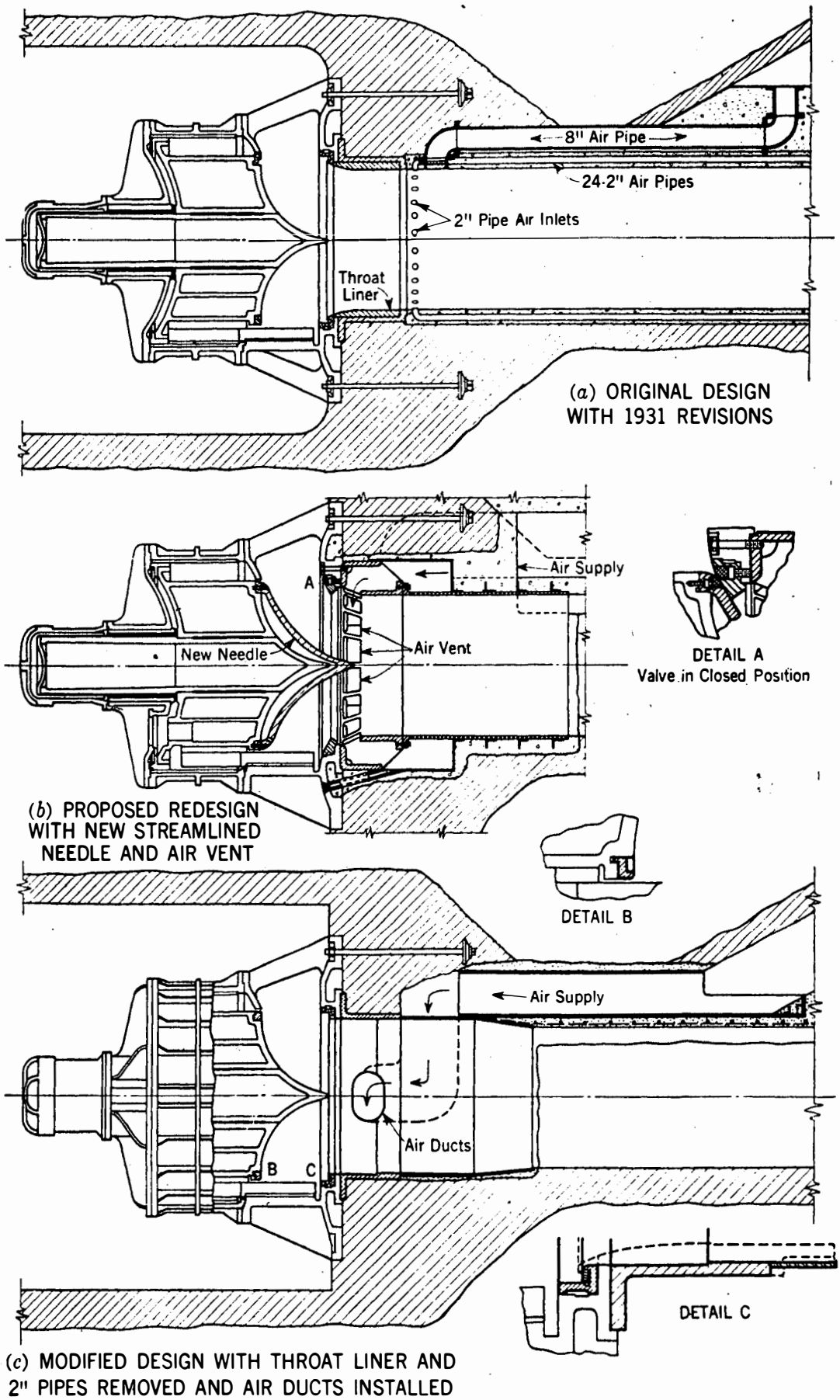

FIG. 39.—BALANCED VALVES IN THE LOWER OUTLETS AT SHOSHONE DAM

below the valve was pitted severely and the face of the needle (Fig. 40(*b*)) had badly pitted areas (by operation in previous years) on which several kinds of

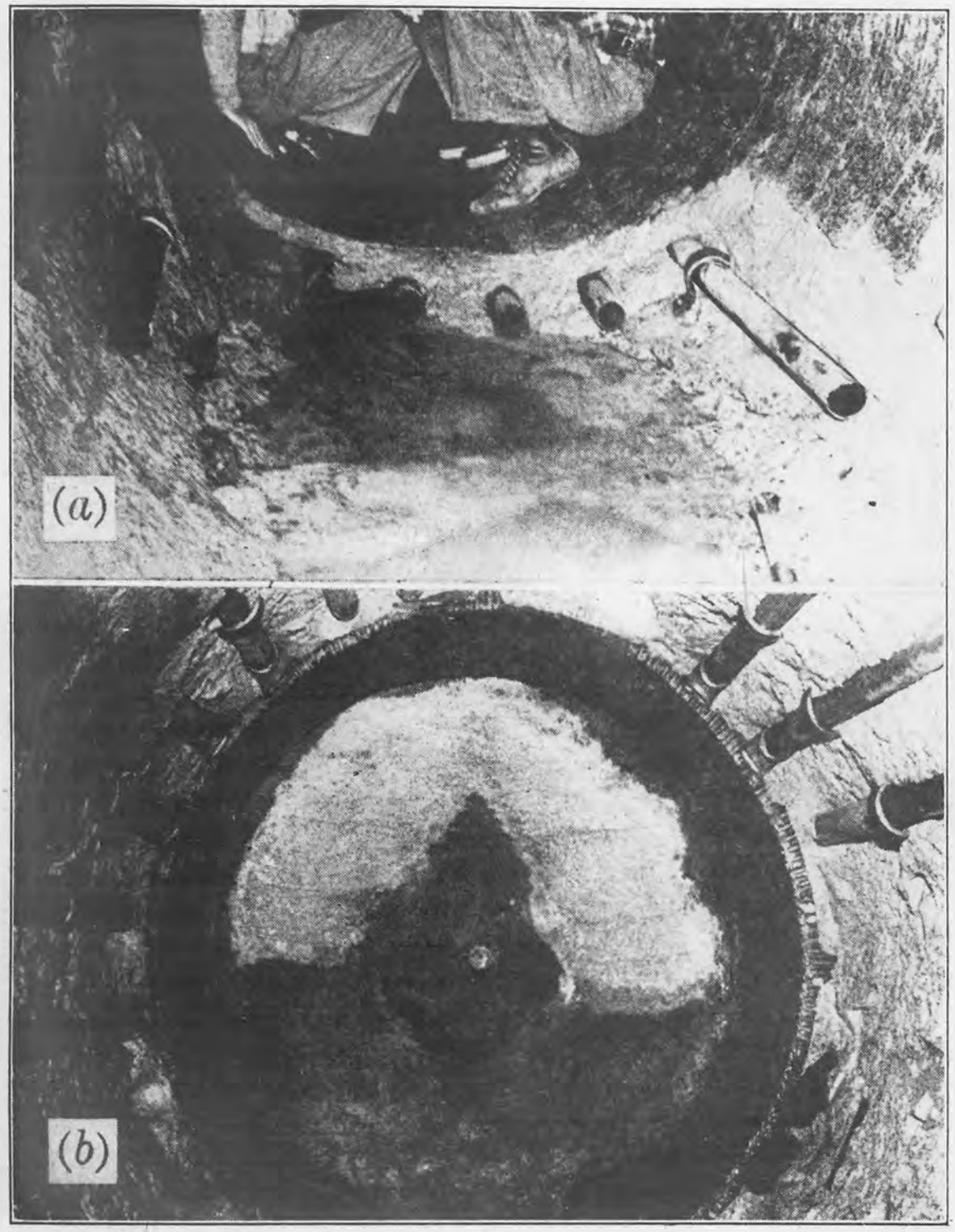

FIG. 40.—REMAINS OF 2-IN. AIR PIPES, SHOSHONE DAM: (*a*) Vent of a 52-In. Conduit Facing Downstream from the East Valve; (*b*) East Conduit

metal had been tried—none satisfactorily. The areas of greatest pitting were below and above the valve guides, where only 3/4 in. of the original 2 in. of parent metal remained. The extensive welding of previous years, on the

needle face, is apparent in Fig. 40(*b*). The end of the metal liner was cut off in 1931 when the present installation was made.

Hydraulic laboratory model studies were made to evolve means of minimizing or eliminating the severe damage, to reduce the unreasonably high seasonal maintenance, and to remove the danger of a possible failure of the water-release system. This problem involved an extensive study of the pressure distribution in the valves and the discharge conduits.

Three alternatives were developed: (*a*) The range of valve opening was determined in which damage would be minimized until materials, unobtainable due to wartime restrictions, become available; (*b*) a redesign (Fig. 39(*b*)) was developed in which adverse pressure conditions were eliminated over the entire range of operation, but at some sacrifice in the discharge capacity; and (*c*) a modification of the present installation (Fig. 39(*c*)) was developed in which pressure conditions were acceptable over a range of valve opening from 25% to 100% with no reduction in the discharge capacity.

The model tests showed that the present prototype vent system is inadequate to prevent cavitation for all except a very small range of valve openings. Insufficient air is supplied between 23% and 70% openings, and some of the 2-in. vent pipes on the invert and crown become ineffective at openings above 85%, due to eddies forming immediately downstream from the V-guides. These conditions precluded safe operation of the present installation at ranges of valve opening other than 70% to 85%. Studies of the present installation indicated that the pitting on the valve needles was most severe between openings of 14% and 25%, and that damage to the conduits resulted between 23% and 70% valve opening. The damage to the conduit at these openings probably rendered the air-supply system ineffective and aggravated the destructive action for larger valve openings.

Damage by cavitation and pitting on the valve needles and discharge conduits can be eliminated entirely by a major revision (Fig. 39(*b*)) of the needle tip, the valve seat, the conduit throat, and the aeration system. This solution will reduce maintenance costs to a minimum and the valves can be operated at any opening without fear of damage due to subatmospheric pressures; but it will reduce the discharge capacity by approximately 20%, a factor to be considered in future revisions.

Minor alterations of the present structure (Fig. 39(*c*)) will involve: (*a*) Streamlining of the sealing edge of the plunger; (*b*) removal of a part of the bronze sealing ring by chipping and grinding; (*c*) removal of the throat liner; and (*d*) revamping of the air-supply system. Aeration equivalent to three 12-in. ducts would be adequate in this arrangement, but slightly more area was recommended as information on air requirements in high-velocity flow is limited. Operation of this modified design at openings smaller than 23% will have to be avoided to prevent damage to the needle. The discharge capacity is not affected noticeably by the modification.

Since materials have been unobtainable to make either the minor alterations or the major revision, the valves were operated during the 1943 irrigation season in the valve-opening range at which the subatmospheric pressures were the least severe. After thirty-five days of operation at 75% opening, the valve

itself showed no evidence of additional pitting, and a very small amount of pitting had occurred in the extreme top of the discharge conduit. Forty-seven days of operation at 9% opening in 1942 had caused the damage shown in Fig. 40.

Parker Dam Spillway Piers

The spillway at Parker Dam has five 50-ft by 50-ft stoney gates to pass the flood waters. These gates were also used for passing the flow of the river during the low-water season, particularly during the early years of operation, before the power plant was completed. As a result of this early scheme of

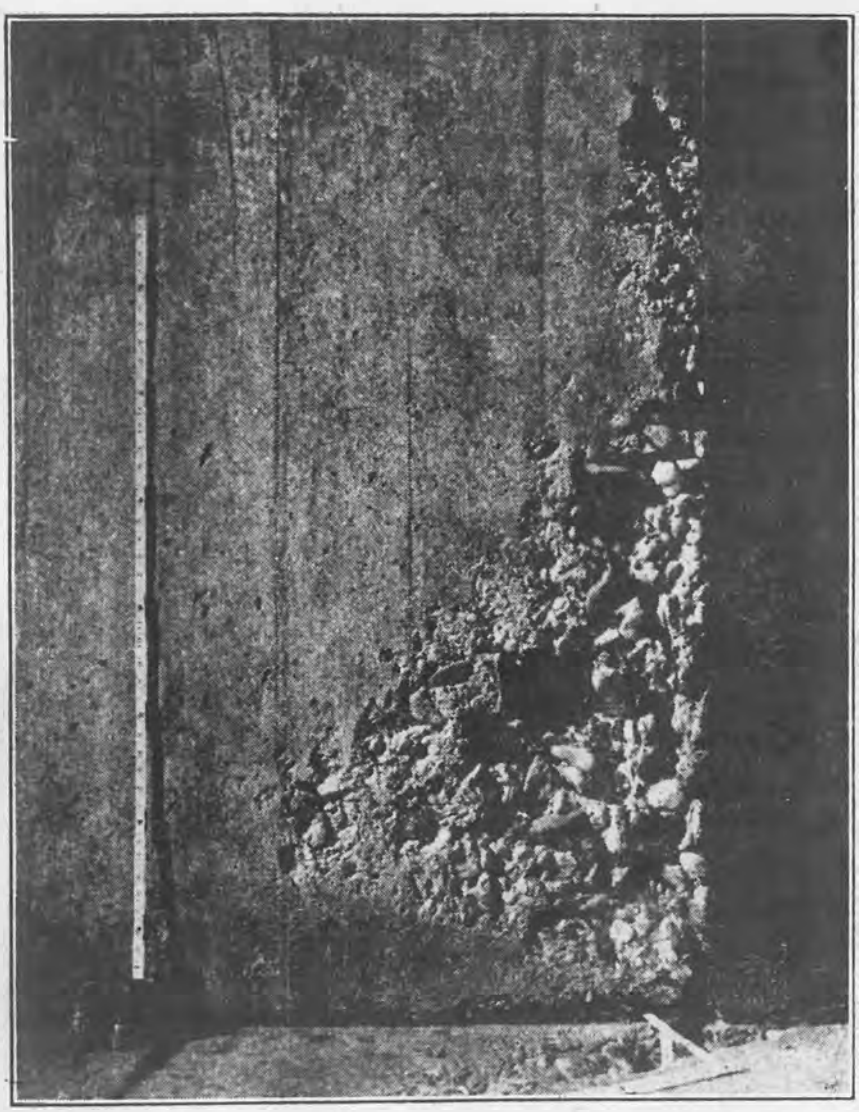

Fig. 41.—Pitted Area on the Face of a Spillway Pier Immediately Downstream from the Gate Recess at the Right, or California End, of Gate No. 5 at Parker Dam

release, the gates were operated continuously over long periods, with a relatively small gate opening and a head above the spillway crest of from 40 ft to 50 ft.

An eroded condition, similar to that on the spillway faces at Bonneville Dam described in a previous paper, began to develop on the faces of the spillway piers and on the spillway crest immediately downstream from the gate slot

(Fig. 41). It first appeared below the gate which had the longest record of operation, but there was evidence of it downstream from the other gates. Subsequent operation of the other gates had gradually developed the same pattern on all ten of the pier faces in lesser degree of intensity. Photographic inspection at approximately yearly intervals discloses some increase in the extent of the area and depth of the erosion, but not sufficient to cause undue alarm, particularly since the power plant has been placed in operation and most of the low-water flow passes the dam through the turbines.

Model studies were undertaken to reveal the cause and means of eliminating pitting at Parker Dam and to prevent it at future installations. Incompleted studies, including all possible circumstances, have revealed several points of interest. The use of transparent models revealed cavitation under the end of the gate in the gate slot as a result of a vortex. Pitting, caused by the collapse of the low-pressure pockets breaking away from the bottom of the vortex, is the only logical explanation of the damage to the pier face.

A similar installation at Guernsey Dam, in Wyoming, showed no signs of erosion on the spillway face even though the gate has operated in the same range for a long period of time. This naturally raised the question as to why erosion occurred at Parker Dam and not at Guernsey Dam.

The gate slot at Guernsey Dam is considerably larger (Fig. 42) in horizontal cross section than the gate slot at Parker Dam. As a result, the vortex in the

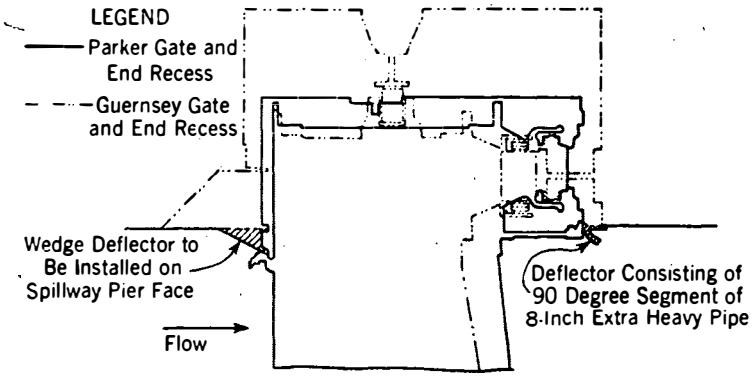

FIG. 42.—COMPARISON OF THE GATE RECESSES OF GUERNSEY DAM AND PARKER DAM, SHOWING THE LOCATION OF THE DEFLECTORS PROPOSED AS REMEDIAL MEASURES AT PARKER DAM

gate slot at Guernsey Dam was large and slow in rotation with no appreciable reduction in pressure at the core, whereas with the smaller cross section of the gate slot at Parker Dam, the angular velocity was high with a very small core and very low pressures in the core. As in the case of the cavitation zone downstream from a venturi throat, the flow condition was unstable and low-pressure pockets broke away from the bottom of the vortex. Some of the pockets collapsed against the boundary surface, resulting in the destruction of the concrete and metal.

According to the present conception of the condition, the solution appears to be the elimination of the vortex. This can be done in a number of ways, none of which is universally applicable. In the case of Parker Dam, it is proposed to install a wedge-shaped deflector (Fig. 42) upstream from the gate sufficient in extent to deflect the flow of water under the gate away from the

downstream corner of the gate slot, thus negating the formation of the vortex. An additional curved deflector consisting of a 90° segment of an 8-in. extra heavy pipe fastened to the metal at the downstream side of the gate slot will further deflect the flow away from the pier face and provide aeration down to the spillway crest. Another solution, practicable where the spillway crest is sufficiently far above the tailwater to provide drainage, is the extension of the end beams of the gates down into wells in the spillway crest, thus making them continuations of the gate slots. These gate-beam extensions will then serve as followers and will fill the gate slot as the gate is raised, providing continuity of the spillway pier face. In the case of a gate 50 ft high, the follower is considered structurally feasible in lengths to 6 ft. The model studies indicated that a follower length of from 2 ft to 3 ft is all that is necessary, since the occasion and duration of operation at the larger openings are infrequent and short.

Insertion of steel plates in the piers in the areas of pitting, as was done on the spillway piers at Bonneville Dam, is also a solution, but one remedying the effect rather than removing the cause.

Boulder Dam Spillway Tunnel

The channel spillway on the Arizona side at Boulder Dam was first placed in operation on August 6, 1941. On August 14, 1941, the drum gates were raised for a few hours and a hurried inspection was made of the tunnel. Little or no sign of erosion was apparent. Operation of the spillway was continued until December 1, 1941, at which time, because of the lowering of the reservoir elevation, it was necessary to start release of water through the tunnel plug outlet needle valves. During the four months of continuous operation, the average flow was approximately 13,500 cu ft per sec, except for several hours on October 28, when one of the drum gates dropped and the maximum flow was 38,000 cu ft per sec.

During a routine inspection of the spillway tunnels on December 12, 1941, an eroded area was discovered in the bottom of the curve connecting the inclined and horizontal portions of the spillway tunnel (Fig. 43(*a*)). The hole was approximately 115 ft long and 30 ft wide, with a maximum depth of 45 ft below invert grade.

The repair (Fig. 43(*b*)) of the damaged area has been described elsewhere (28). The chief concern here is an attempt to analyze the cause of the erosion. A number of theories have been advanced. In the opinion of the writer, the primary cause was misalinement of the tunnel a few feet upstream from the upper end of the eroded area. With an extremely high velocity down the inclined portion of the tunnel (at least 150 ft per sec), the stream followed the invert profile down to the hump; but as it flowed over the hump, the water could not follow the sudden change in grade and a cavitation region formed between the sheet of flowing water and the concrete. The pressure in that region was the vapor pressure of the water, but since this condition was very unstable, the low-pressure pocket or cavity intermittently passed downstream

in the region of higher pressures, collapsed and disintegrated or pitted the concrete as shown in the foreground of Fig. 44. The misalinement is defined by the position of the rope in Fig. 44.

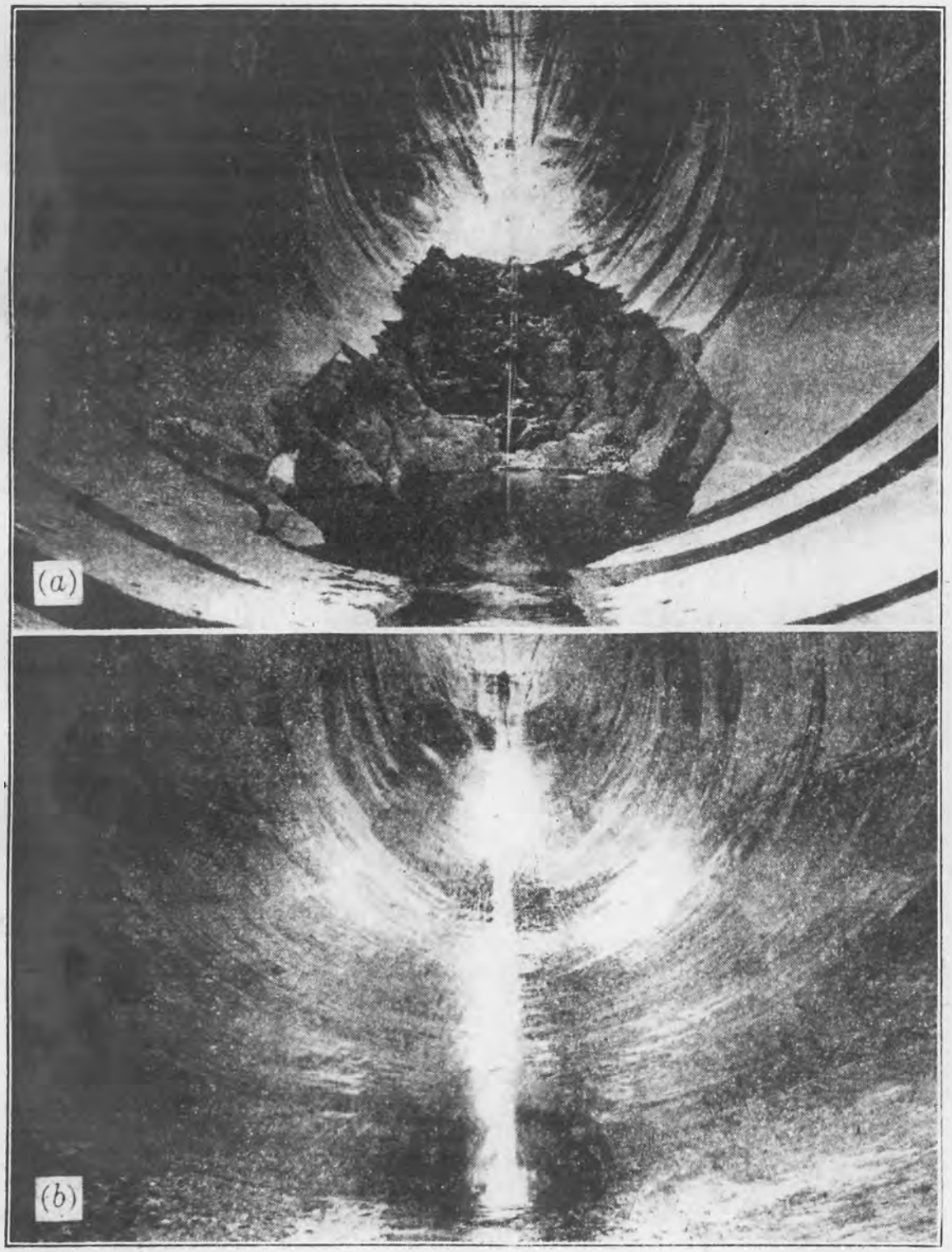

FIG. 43.—CAVITATION IN THE SPILLWAY TUNNEL ON THE ARIZONA SIDE, BOULDER DAM: (*a*) Eroded Area After Unwatering; (*b*) After Completion of Repairs

With the surface of the concrete broken by the pitting over a relatively small area, the high-velocity water had a grip on the concrete and destruction by

impingement started. Imperfections in the concrete, such as rock pockets, cold joints, porous areas, lack of bond, etc., all made the concrete more vulnerable to this attack by impingement. Furthermore, the impingement of the high-velocity water on any exposed joints would cause the energy in the water to be converted from velocity head to pressure head. This pressure was probably transmitted through the planes of weakness in the construction joints

FIG. 44.—PITTED SURFACE DOWNSTREAM FROM THE MISALINEMENT IN THE TUNNEL AT THE UPSTREAM END OF THE ERODED AREA

caused by lack of proper horizontal joint cleanup prior to placement of new concrete. The concrete, being weak in tension, was dislodged in a manner similar to freezing of concrete and the resulting expansion. The concrete was probably dislodged in quite large pieces. After the concrete lining was ripped away, the shattered rock in an underlying fault was dislodged and transported away by the water. The shattered rock in the fault contributed to the extent of the erosion and not to the cause. After the surface was broken by the pitting and the joints were exposed to direct impingement, the sheet of high-velocity water down the tunnel invert acted as a mammoth hydraulic giant.

The pitting of the concrete surface downstream from the hump is analogous to a flesh wound. Infection followed which was aggravated by the weaknesses

in the concrete and the shattered condition of the underlying rock. Under the conditions of misalinement which existed at a critical position in the inclined tunnel, it is doubtful that any material could have withstood the effects of cavitation indefinitely. Of course, perfectly sound homogeneous concrete and underlying rock would have greatly reduced the extent of the erosion.

If the rock pockets, cold joints, and other porous areas in the invert are assumed to be the primary cause of failure, it is difficult to explain why the rock pockets immediately above and below the hump have not been the source of erosion, since the velocity of the water at all three points is for all practical purposes the same. Actually, the coat of black waterproofing and mineral deposit was intact in many places, showing no effect of direct scouring by the high-velocity water immediately above and below the eroded area.

In making the repairs to the tunnel, aside from providing concrete having the most suitable qualities practicable, extra effort was made to provide a smooth continuous surface with no humps or depressions. Two major humps and several minor humps in the invert above the eroded area were entirely eliminated by bushing and grinding, using a template cut to the true radius of curvature. Rock pockets were cleaned, patched, and then ground to conform to the surrounding concrete. Accumulations of grout and mineral deposits were removed. The surface of new concrete in the eroded area was finished carefully to produce a sound, continuous, uninterrupted surface. The surface was given a final grinding with a small terrazzo machine to remove board marks and objectionable offsets, leaving an extremely smooth surface. Minor bulges in the surface were removed by bushing followed by grinding, using a template cut to the correct radius of curvature. Considerable care was used in grinding the surfaces adjacent to the old concrete lining to remove all offsets and other irregularities.

Conclusion

These illustrations are typical situations which should be avoided by designing engineers. Other such examples must exist. If these could be brought to light and explained in the discussions of this Symposium, they would be a definite contribution. Since experience seems to be the principal source of knowledge, those of the profession who are intimate with the effects, even though they have attained that knowledge the hard way and in some cases the embarrassing way, should impart their experiences so that a wide variety of instances can be available to avoid repetition in the future.