RECLAMATION

Managing Water in the West

Solar Photovoltaic Desalination Using Distillation

Research and Development Office
Science and Technology Program
Final Report 2014, Project ID 4850

Mitchell Haws – Principle Investigator

U.S. Department of the Interior
Bureau of Reclamation

September 2014

Mission Statements

The mission of the Department of the Interior is to protect and provide access to our Nation's natural and cultural heritage and honor our trust responsibilities to Indian Tribes and our commitments to island communities.

The mission of the Bureau of Reclamation is to manage, develop, and protect water and related resources in an environmentally and economically sound manner in the interest of the American public.

REPORT DOCUMENTATION PAGE		Form Approved OMB No. 0704-0188
T1. REPORT DATE MONTH YEAR	**T2. REPORT TYPE** Research	**T3. DATES COVERED** 2011 to 2014
T4. TITLE AND SUBTITLE Solar Photovoltaic Desalination Using Distillation		**5a. CONTRACT NUMBER** RY1541AW20.11204850
		5b. GRANT NUMBER
		5c. PROGRAM ELEMENT NUMBER 1541 (S&T)
6. AUTHOR(S) Mitchell Haws		
		5e. TASK NUMBER
		5f. WORK UNIT PXAO-7000
7. PERFORMING ORGANIZATION NAME(S) AND ADDRESS(ES) Mitchell Haws Bureau of Reclamation 6150 W. Thunderbird Rd Glendale, Arizona 85308		**8. PERFORMING ORGANIZATION REPORT NUMBER**
9. SPONSORING / MONITORING AGENCY NAME(S) AND ADDRESS(ES) Research and Development Office U.S. Department of the Interior, Bureau of Reclamation, PO Box 25007, Denver CO 80225-0007		**10. SPONSOR/MONITOR'S ACRONYM(S)** R&D: Research and Development Office BOR/USBR: Bureau of Reclamation DOI: Department of the Interior
		11. SPONSOR/MONITOR'S REPORT NUMBER(S) ID4850

12. DISTRIBUTION / AVAILABILITY STATEMENT
Final report can be downloaded from Reclamation's website: https://www.usbr.gov/research/

13. SUPPLEMENTARY NOTES

14. ABSTRACT ***(Maximum 200 words)***

In an effort to further the research in Solar Desalination a test facility was developed at well site 5T-529 near Leupp Arizona. A solar power plant was developed which produced 5.4 kW of electricity and 8 Therms of heat (800,000 btu). A weather station to gather meteorological data was install at the site. A dedicated solar pumping system was developed to insure adequate water supplies for the test facility and local livestock populations. The power plants and pumping systems were commissioned and are working continuously. A membrane distillation advanced water treatment system was developed and installed at the site. This system is anticipated to be commissioned in the 2015 funding cycle.

15. SUBJECT TERMS
Solar, Photovoltaic, Desalination, Distillation, Membrane, Native American, Advanced Water Treatment

16. SECURITY CLASSIFICATION OF: unclassified			**17. LIMITATION OF ABSTRACT**	**18. NUMBER OF PAGES**	**19a. NAME OF RESPONSIBLE PERSON** Mitchell Haws
a. REPORT U	**b. ABSTRACT** U	**c. THIS PAGE** U	**U**	86	**19b. TELEPHONE NUMBER** 623-773-6274

S Standard Form 298 (Rev. 8/98)
P Prescribed by ANSI Std. 239-18

PEER REVIEW DOCUMENTATION

Project and Documentation Information

Project Name: Solar Photovoltaic Desalination Using Distillation

WOID: DC8EB

Document: Solar Photovoltaic Desalination Using Distillation Final Report

Document Author(s): Mitchell Haws Document Date: 9-30-2014

Peer Reviewer: Ardeth Barnhart

Review Certification

Peer Reviewer: I have reviewed the assigned items/sections noted for the above document and believe them to be in accordance with the project requirements, standards of profession, and Reclamation policy.

Reviewer Ardeth Barnhart ___Date Reviewed_09/30/2014
(Signature)

BUREAU OF RECLAMATION
Phoenix Area Office
Program Development, PXAO-7000

Final Report

Solar Photovoltaic Desalination Using Distillation

Mitchell Haws

Prepared: Mitchell Haws
Principle Investigator – Program Development Division
Phoenix Area Office, Glendale Arizona
623-773-6274

Contents

Page

Table of Figures

2014 Final Report

Executive Summary

The work elements completed thus far for this project under Science and Technology, ID 4850 "Solar Photovoltaic Desalination Using Distillation," including cost share partners are as follows:

- Regional Assessment
- Navajo Well 5T-529 Site Assessment Report
- Site Development
    - Design
    - Contract Requisition
    - Contract Development
    - Solicitation
    - Contract Award
    - Contract Completion
- Concentrated Photovoltaic – Thermal Hybrid System (CPVTHS)
    - CPVTHS Design
    - CPVTHS Requisition
    - Contract Solicitation
    - CPVTHS Contract Award
    - Contract Completion
- Membrane Distillation System
    - Mass Balance Model
    - System parameters
    - Conceptual Design
    - Cooperative Agreement Requisition
    - Cooperative Agreement Award Under CESU (September 2013)
    - Design of Desalination Equipment
    - Shop Fabrication and Testing of Desalination Equipment
    - Installation of Desalination Equipment at Well Site 5T-592
    - Testing and Commissioning
- Cost Share Partners
    - Denver Research Office under Science and Technologies
    - The University of Arizona
    - The Grand Canyon Trust
    - The Navajo Nation
    - Reclamation Native American Affairs Office
    - The Provo Area Office

The overall project under this phase of the work will be complete on September 30, 2014. It is anticipated that additional study work will be undertake in FY 2015 under Science and Technologies, Proposal No. 6808. The details of that proposal are available from the Science and Technologies website.

A summary of the activities described above are as follows:
A test facility was constructed at well site 5T-529 near Leupp, Arizona. The test facility includes site equipment, a secured fenced-in area with concrete a pad, secure storage building and control house, anchorage for solar power plant and all necessary piping from the existing water storage tank to the test site discharge pond. A CoGenra SunPack 12 power plant was installed which produces photovoltaic power and usable BTU's. A structure was constructed on the concrete pad to protect the advance water treatment system. Finally the advanced water treatment system or membrane distillation system was constructed inside the protective structure.

A weather station was installed for monitoring meteorological condition including insulation. The data is periodically downloaded for dissemination. The system is capable of being connected to the Nation Weather Service but is not currently because of the data transfer protocol is being developed.

A dedicated solar pumping system was designed and constructed as a stand-alone system to insure the 24,000 gallon water storage tank will remain full. This dedicated system also enables that releases can be made to the 24,000 gallon tank connect by a 7-mile long pipeline down gradient from this site.

Three separate remote monitoring systems have been connected to the site providing critical data to insure this system is functioning. These systems are: a CoGenra interface, a SMA Sunny Portal, and a Programmable Logic Controller (PLC) all with password protected secure internet connections.

All of the equipment at the site have been commissioned and are operating. The solar pumping system and the CoGenra power plant are operating continuously. The advance water treatment system or membrane distillation system is only operating when the University of Arizona student and faculty are present. The first distilled water from the system was produced on July 10, 2014. It is anticipated that during the next funding cycle the advance water treatment system will be configured to operate continuously. This entire system is anticipated to be an off-grid advanced water treatment system capable of providing better quality water for livestock with prospect of upgrading the system to a potable water treatment system for the local population.

Regional Assessment

The University of Arizona (UA) contracted with the Phoenix Area Office to cost-share the assessment of renewable energy powered advanced water treatment technologies. Researchers developed parameters to assess the water resource problems, opportunities and constraints. An array of options emerged utilizing solar energy systems and membrane water treatment technologies.

The UA graduate and Phd candidate students developed a "bench scale" solar powered multi-effect distillation system, utilizing local brackish water, in the laboratory of the Department of Chemical and Environmental Engineering. Scale factors impeded success to meet water quality thresholds within the range of operation, maintenance and replacement costs defined as suitable for a sample of remote and rural water users on the Navajo Nation in northeastern Arizona. The research team subsequently developed a membrane distillation system at a pilot scale that met parameters that could be developed within the laboratory and local field site setting. The team prepared to deploy a system within the Navajo Nation to evaluate scale, regulatory, economic and social/cultural sustainability factors.

UA, Bureau of Reclamation and Navajo Department of Water Resources team members identified wells known to have water quality problems within the region as potential candidates for the solar membrane distillation application. Five wells representing known water quality problems for both livestock and public water systems were chosen for sampling as follows:

- 17T-583 Public Water System well known to have elevated levels of iron and manganese.
- 07T- 554 Livestock well known to have elevated levels of uranium and nitrates.
- 07T-522 Public Water System well known to have elevated levels of arsenic.
- 05T-537 Livestock well known to have elevated levels of total dissolved solids.
- 05T-529 Livestock well known to have elevated levels of total dissolved solids.

Figure 1 - University of Arizona students gathering data

Figure 2 - Water Samples taken from 5 wells and characterized at the University of Arizona

Water samples were taken from the 5 wells and chemically characterized in the UA laboratory in Tucson, Arizona.

The water quality analysis confirmed elevated levels of chemical constituents that summary of the water quality analysis confirmed the

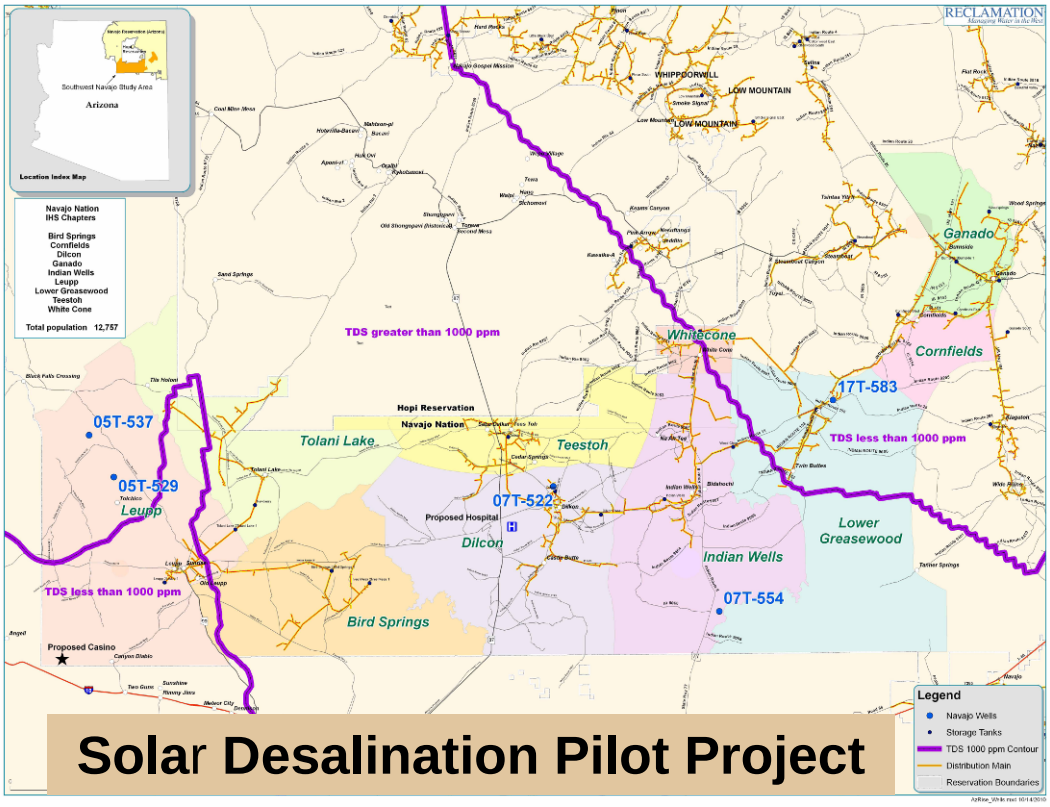

Figure 3 - Well site identified in the Southwestern Navajo Nation

Well Site Assessment Report

Stockwell 05T-529 - Summary of Downhole Video Survey and Pumping August 15-18, 2011

<u>Video Logging</u>

A video survey was conducted for well 05T-529 on August 15, 2011. The video camera lens (depth) was zeroed out at ground level, a centralizer installed and the survey was recorded to high definition DVD. The steel well casing is 6-5/8-inch diameter. The sucker rod had been removed the previous week and the well brushed and cleaned by the Navajo Nation Leupp pump crew on August 11-12. This only left the weekend for the water column to clear up.

Figure 4 - Down-hole camera taking video at Well Site 5T-529

The steel casing appeared to be in good condition and clean for most of its length, especially the first 300 feet, which is documented in Title 1 (19:49 minutes duration). Some minor pitting was observed below about 100 feet. Welded casing joints were encountered about every 20-21 feet. The recording continued as Title 2 (42:53) from 300 to 483 feet where the camera apparently bottomed out on sediment (the well is reported to be 500-foot deep from the Navajo Well database). Welded joints continued at about 312 feet and at 333 feet were some patchy rust spots.

The camera encountered the static water level at 326.5 feet and once below water, visibility via the down view lens was poor to non-existent. The remaining survey used the side view lens to observe the casing wall, joints and slotted features. At approximately 358 feet, began picking up noticeable encrustation (coating or plating) of calcium carbonate deposits. The first feature, which initially was thought to be the top of a wire wrapped well screen, was subsequently interpreted to be exposed casing threads, as any well screen would be expected to continue for many feet (there are no known well screen or slotting records for this well). Several more intervals were seen of these casing threads, at 393.5, 415.1, 457.1, and 478.4 feet. Each interval was estimated to be about 0.1-0.2 feet thick. Often seen were "windows" through the coatings to clean casing steel and brush or scratch marks through the coatings, presumably from the Navajo crew's brushing efforts and/or from when the submersible pump/flex hose dropped to the well bottom in the November 2010 work.

The first possible perforation feature (vertical torch cut slot) seen was at about 397.9 feet and the bottom of the slot at about 399.5 feet. It is interpreted the casing had been torch cut slotted in the lower 100 feet (about

400-500) of the steel well casing during installation in 1974. The next slot observed was about 405 to 407 feet. Other thin slots were recorded at about 428-429.5 feet, 431.9-432.6 feet, 440.5-441.0 feet and 441.4-441.6 feet. The slots are undulating.

Figure 5 - Obtaining water samples from Well 5T-529

The slots appear to have been torched randomly (random intervals) along the casing as the casing sections were welded, with some as pairs on opposite sides (180 degrees) of the casing, but others on only one side. This was not consistent and no orderly slot groups or arrays seem to be present as would normally be expected. An example of a group might be four 2 foot-long slots cut longitudinally each 90 degrees around the casing, in depth increments of 5 to 10 feet. The 05T-529 slots had varying degrees of clogging or tuberculation, of what is expected to be calcium carbonate and other insoluble salts (e.g. chlorides) healing much of the slot open area. The plugged to open slot percentage was estimated at about 60:40. The camera stopped at about 483 feet on sediment and the survey was completed at 5:15 p.m.

<u>Pumping</u>

On Tuesday August 16, 2011 at about 8:00 a.m., the static water level was measured from the top of the 6-5/8-inch steel casing at 324.76 feet (323.5 feet below ground level). The 4-inch Grundfos 40S75-25 submersible pump was attached to the lowermost section of riser pipe and the 10/4 electrical cable spliced to the motor leads using crimps and heat shrink tubing kits. Thirty-nine additional sections of 10.5-foot long threaded and coupled 2-inch diameter galvanized steel riser pipe were assembled and lowered into the well by the Navajo Nation Leupp Chapter pump crew foreman Harvey Riggs and his two helpers. The pump intake is set about 406 feet deep. A by-pass valve and hose was attached to the riser pipe at the top of the wellhead, and

at 12:33 p.m. the pump was activated using a rented 34 Kw three-phase Multiquip generator through the three-phase electrical control panel.

The discharge water cleared rapidly which was directed into the charco. Two bucket tests determined the discharge as 5.71 and 5.83 seconds per 5 gallons or about 53 gpm. At 1:15 p.m. a water level sounder measurement showed the pumping level at about 370 feet below top of casing, or about 45 feet of drawdown. By 1:30 p.m. the discharge had dropped off to about one-half the initial rate, likely more representative of aquifer storage rather than casing storage. At this time a 2-inch Neptune totalizing meter was attached to the discharge line to begin filling the 24,000 gallon storage tank. The starting meter reading was 8363700 gallons. By 1:55 p.m. the pump rate was 27-28 gpm according to the meter. A bucket test at 3:24 p.m. was 9.61 sec/5 gal or 31.2 gpm. Temperature of bypass discharge was 66 degrees. Pumping continued until 5:30 p.m. and the generator was hauled back to the Leupp Chapter yard for security.

On August 17, 2011 the static water level was measured at 324.77 feet below top of casing (323.5 feet bgl), showing that the aquifer had recovered fully. Pumping began again at 10:33 a.m. after the UA staff repaired one of the water level sounders. A bucket test showed 5.63 sec/5 gal or 53.3 gpm, very similar to the initial discharge rate the previous day. At this time the UA collected water samples from the by-pass discharge hose. At 11:30 a.m. the pumping depth to water was 373.25 feet (48.48 feet of drawdown) at 27-28 gpm, for a specific capacity of 0.58, a fairly low production rate, but representative of many tests in the C-Aquifer. The pump rate remained consistent at 27-28 gpm throughout the day, and at 4:10 p.m. the drawdown had increased to 52.06 feet. The pumping water level at this time was 377.71 feet from TOC or 376.83 feet bgl. Pumping stopped at 5:00 p.m. The storage tank had filled halfway to about the 10,000-11,000 gallon level. The generator was then taken to the Leupp yard for storage.

Pumping continued the next day to continue filling the storage tank. The static water level was measured first thing on August 18, 2011 at 324.94 feet below top of casing (323.7 feet bgl). The well had likely recovered back to static level and the 0.2-foot difference from the previous day is attributed to difficulties in obtaining repeatable water level indicator readings due to variable probe sensitivities. The probe tends to pick up moisture and cascading or dribbling flows from higher levels which are sometimes difficult to separate from the actual water table in the well.

The water meter continued to show 28 gpm discharge rate, and the final pumping water level reading was 379.27 feet below top of casing or 378 feet below ground level at 9:10 a.m. The ending meter reading was 8380200 gallons. At least 16,500 gallons was pumped from the C-Aquifer through the meter. An additional approximately 1800 gallons was pumped to the charco

and cattle troughs prior to incorporating the meter, for a total volume of about 18,000 gallons.

The pump and riser pipe including submersible pump cable was left in the well for future stock-tank filling by the Navajo Nation DWR. The three-phase electrical control panel was disconnected from the pump cable and generator, placed in its box and wrapped with a plastic garbage bag. It was placed into the 4-foot CMP culvert to try and keep it out of sight for upcoming installation by the NNDWR Leupp pump crew. This is government equipment.

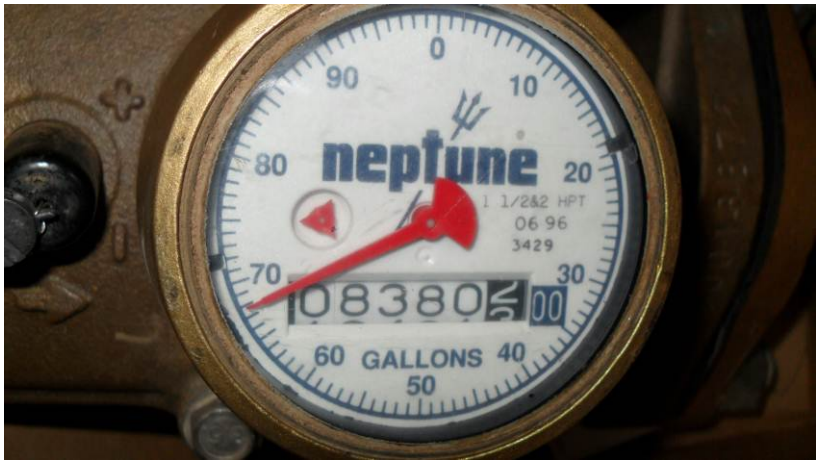

Figure 6 - Flow meter monitoring potential water volumes

Well Analysis

					BMDL	Below minimum	detection limit			
August 18 -19 2011 Well Water Quality Analysis: Navajo Nation					NA	Not available				
	5T529 (pumped) 10:28	5T529 (pumped) digested 10:28	5T529 (pumped) 14:20	5T529 (pumped) digested 14:20	5T529 (pumped) 16:30	5T529 (pumped) digested 16:30	5T529 (pumped) digested 8:05	5T537 (windmill/open tank) 11:10	MCL	SMCL
Depth	373.25	NA	373.25	NA	376.83	NA	324.95	NA		
Date	08.17.11	NA	08.17.11	NA	08.17.11	NA	08.18.11	08.18.11		
Temp, °C	18.23	NA	17.97	NA	18.03	NA	17.3	24.89		
pH	7.72	NA	7.72	NA	7.73	NA	7.6	8.56		
ORP, mv	102.00	NA	162.00	NA	162	NA	60	215		
D.O., mg/L	5.95	NA	6.53	NA	6.71	NA	1.61	4.75		
D.O., %	68.90	NA	73.00	NA	77	NA	18.7	63.6		
Cond., mS/cm	2.23	NA	2.22	NA	2.241	NA	2.261	6.484		
TDS (calc), mg/L	1312.50	NA	1306.65	NA	1317.71	NA	1330.74	4384.50		
TOC, mg/L as C	0.5655	NA	0.3958	NA	0.3728	NA	NA	NA		
Alkalinity, mg/L CaCO3	134.62	NA	170.29	NA	150.63	NA	NA	NA		
Cl^-, mg/L	454.49	NA	446.83	NA	444.99	NA	NA	NA		250
SO_4^{2-}, mg/L	255.17	NA	229.52	NA	229.20	NA	NA	NA		250
F^-, mg/L	0.1295	NA	0.1295	NA	0.1261	NA	NA	NA	4.00	2.00
Br^-, mg/L	0.1226	NA	0.1155	NA	0.1165	NA	NA	NA		
NO_3^-, mg/L	0.4097	NA	0.4708	NA	0.4550	NA	NA	NA	10	
Na^+, mg/L	283.96	223.75	273.99	223.51	270.21	223.13	217.58	1136.78		
Na^+, mg/L	274.22	NA	270.85	NA	265.69			1182.43		
avg Na^+, mg/L	279.09	223.75	272.42	223.51	267.95	223.13	217.58	1159.60		
K^+, mg/L	3.0496	2.8335	2.6676	3.0012	2.6189	2.7169	2.6904	3.9990		
K^+, mg/L	2.9618	NA	2.7221	NA	2.6400			4.1442		
avg K^+, mg/L	3.0057	2.8335	2.6948	3.0012	2.6295	2.7169	2.6904	4.0716		
Ca^{2+}, mg/L	105.98	86.08	101.33	84.75	101.22	86.13	80.48	93.18		
Ca^{2+}, mg/L	100.58		101.12	NA	98.07			86.98		
avg Ca^{2+}, mg/L	103.28	86.08	101.22	84.75	99.65	86.13	80.48	90.08		
Mg^{2+}, mg/L	55.99	45.06	55.32	45.51	54.56	44.98	44.76	58.36		
Mg^{2+}, mg/L	50.52	NA	51.52	NA	50.62			53.75		
avg Mg^{2+}, mg/L	53.26	45.06	53.42	45.51	52.59	44.98	44.76	56.06		
Sr^{2+}, mg/L	1.6875	1.3845	1.6373	1.3434	1.6527	1.3430	1.2856	1.0831		
Sr^{2+}, mg/L	1.6949	NA	1.69	NA	1.6563			1.0752		
avg Sr^{2+}, mg/L	1.6912	1.3845	1.6645	1.3434	1.6545	1.3430	1.2856	1.0792		
Fe^{3+}, mg/L	3.7095	3.5233	0.1751	1.1252	0.7344	1.1814	1.9230	2.7100		
Fe^{3+}, mg/L	3.9334	NA	0.8273	NA	0.5326	NA	NA	1.4983		
avg Fe, mg/L	3.8214	3.5233	0.5012	1.1252	0.6335	1.1814	1.9230	2.1042		0.30
Mn^{3+}, mg/L	0.2356	0.2521	0.0301	0.0304	0.0264	0.0265	0.1584	0.1610		
Mn^{3+}, mg/L	0.2111	NA	0.0286	NA	0.0177	NA	NA	0.1371		
avg Mn, mg/L	0.2234	0.2521	0.0293	0.0304	0.0221	0.0265	0.1584	0.1490		0.05
Zn^{2+}, mg/L	0.5671	0.8629	0.0537	0.0954	0.0542	0.1299	4.2102	0.6671		
Zn^{2+}, mg/L	0.4070	NA	0.0427	NA	0.0287	NA	NA	0.5778		
avg Zn^{2+}, mg/L	0.4871	0.8629	0.0482	0.0954	0.0415	0.1299	4.2102	0.6225		5.00
Ba^{2+}, mg/L	0.0215	0.7512	0.0198	0.9811	0.0202	1.1955	0.8329	0.0451		
Ba^{2+}, mg/L	0.0169	NA	0.0203	NA	0.0168	NA	NA	0.0417		
avg Ba^{2+}, mg/L	0.0192	0.7512	0.0200	0.9811	0.0185	1.1955	0.8329	0.0434	2.00	
Al^{3+}, mg/L	0.4483	1.4441	0.0203	1.9145	0.0866	2.2041	1.5313	0.5153		
Al^{3+}, mg/L	BMDL	NA	BMDL	NA	BMDL	NA	NA	0.0773		
avg Al^{3+}, mg/L	0.4483	1.4441	0.0203	1.9145	0.0866	2.2041	1.5313	0.2963		0.20
U, mg/L	0.0068	0.0047	0.0011	0.0025	0.0029	0.0024	0.0027	0.0013		
avg U, mg/L	0.0068	0.0047	0.0011	0.0025	0.0029	0.0024	0.0027	0.0013	0.030	
Si, mg/L	5.6862	3.6210	4.9009	3.6469	5.4083	3.4678	3.2208	3.7859		
Si, mg/L	4.5071	NA	5.74	NA	5.1187	NA	NA	3.8894		
avg Si, mg/L	5.0966	3.6210	5.3181	3.6469	5.2635	3.4678	3.2208	3.8377		
As, mg/L	0.0028	0.0112	0.0018	0.0104	0.0042	0.0093	0.0087	0.0075	0.010	
Se, mg/L	0.0290	0.0209	0.0267	0.0293	0.0248	0.0294	0.0160	0.0240	0.050	
P, mg/L	NA	NA	NA	NA	NA	NA	NA	NA		
Pb, mg/L	0.0074	0.0044	none detected	0.0037	0.0024	0.0037	0.0029	0.0042		
V, mg/L	none detected	0.0095	none detected	0.0138	none detected	0.0174	0.0114	none detected		
Be, mg/L	none detected	none detected	none detected	none detected	none detected	none detected	none detected	none detected	0.004	
B, mg/L	0.1006	NA	0.1018	NA	0.0970	NA	NA	0.10489		
Ti, mg/L	0.0081	0.4541	0.0072	0.5718	0.0072	0.6495	0.0208	0.0082		
Cr, mg/L	0.0045	0.0056	none detected	0.0082	0.0015	0.0072	0.0054	0.0073	0.10	
Co, mg/L	0.0026	none detected	0.0023	none detected	0.0021	none detected	none detected	0.0023		
Ni, mg/L	0.0063	0.0133	0.0048	0.0133	0.0052	0.0110	0.0059	0.0061		
Cu, mg/L	0.0347	0.0221	0.0019	0.0147	0.0090	0.0162	0.0136	0.0302		1.00
Ge, mg/L	NA	NA	NA	NA	NA	NA	NA	NA		
Zr, mg/L	NA	NA	NA	NA	NA	NA	NA	NA		
Nb, mg/l	NA	NA	NA	NA	NA	NA	NA	NA		
Mo, mg/L	0.0014	0.0047	0.0018	0.0069	0.0017	0.0050	0.0047	none detected		
Ag, mg/L	none detected	none detected	none detected	none detected	none detected	none detected	none detected	none detected		0.10
Cd, mg/L	none detected	none detected	none detected	none detected	none detected	none detected	none detected	none dectected	0.005	
Sn, mg/L	none detected	none detected	none detected	none detected	none detected	none detected	none detected	none dectected		
Sb, mg/L	none detected	none detected	none detected	none detected	none detected	none detected	none detected	none dectected	0.006	
Ta, mg/L	NA	NA	NA	NA	NA	NA	NA	NA		
W, mg/L	NA	NA	NA	NA	NA	NA	NA	NA		
Re, mg/L	NA	NA	NA	NA	NA	NA	NA	NA		
Hg, ng/L	NA	NA	NA	NA	NA	NA	NA	NA	2000	
Tl, mg/L	none detected	none detected	none detected	none detected	none detected	none detected	none detected	none detected	2000	

Figure 7 - Water chemistry at Well 5T-529

Solar Pump Installation

The solar pumping system was purchase and installed in the Well 5T-529 near Leupp Arizona. The pump and required equipment was deployed in the well on May 2-3, 2012. The system consists of:

- Grundfos 11SQF-2 solar pump
- Grundfos CU200
- Grundfos I.O. 101 status/level switch and termination/generator interface control boxes
- CU 200 level switch
- 500 feet of control cable

Figure 8 - Solar well pump controllers

Figure 9 - Solar well pump

This pump system works with an AC generator, with AC line power, with 12-volt or, 24-volt solar power and 120-volt and 240 volt coming from the CPVTHS System installed for operating the solar desalination system equipment under this research.

In order to produce a reliable supply of water for the local livestock and not interrupt the research, a dedicated 12-volt solar photovoltaic system was installed for well pumping and is currently operational which keeps the 24,000 gallon water storage tank full. This system also maintains a water

supply in “Tank B” another 24,000 gallon water storage tank located 7 miles down gradient from well site 5T-529.

Figure 10 - Dedicated solar panels for pumping

Site Development

In order to continue this research at the chosen well site 5T-529 a test facility was developed. A pad for the membrane distillation systems, the anchoring system for the solar photovoltaic thermo hybrid system, an out building for the electronic controllers, and a secure fenced in area was constructed beginning in September 2012 and completed in December of the same year.

Site Development Design

The site development design consisted of constructing a test facility for desalination process intended to increase the supply and quality of water for the Navajo Nation. The facility is located 15 miles northwest of Leupp, Arizona in a remote location west of Indian Route 6722. Existing structures at the current location consist of a 24 thousand gallon water storage tank, a watering trough used to provide water for livestock in the area, an existing groundwater well, and a decommissioned windmill powered pump system which has been replaced by a submersible solar pumping system.

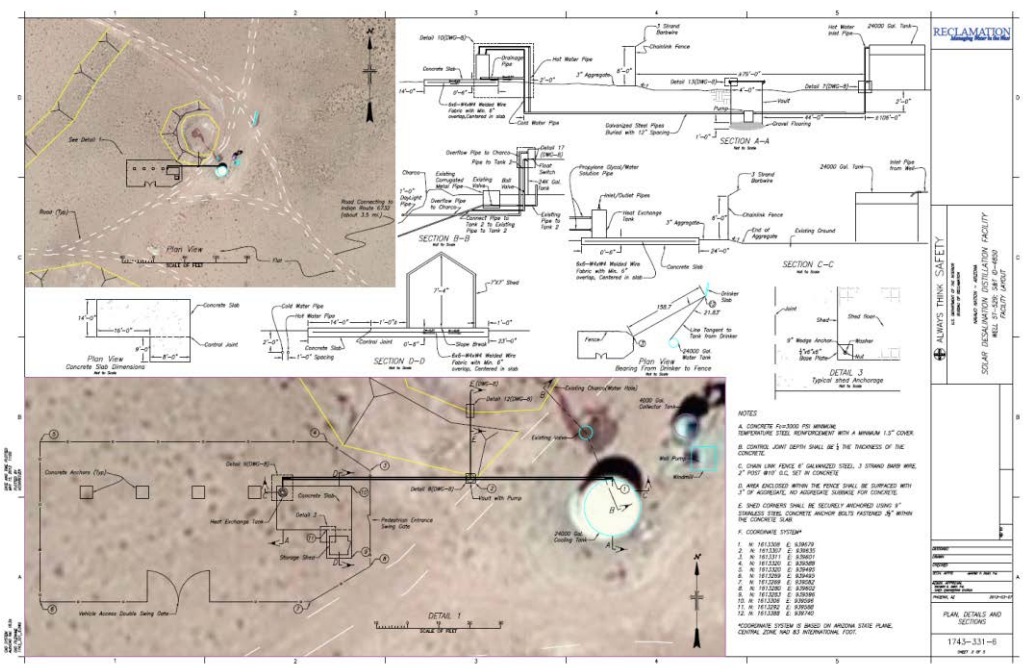

Figure 11 - Site development plant

SCOPE OF WORK PERFORMED INCLUDES:

1. Furnish and install 300 ft of 6’ tall fence, 3 strand barb wire on top, a vehicle gate and a pedestrian gate.
2. Furnishing and installing 50 yd^3 of gravel surfacing.

3. Furnish and install 8 yd^3 of concrete with wire mesh reinforcement.
4. Furnish and install a 7'x 7' waterproof shed.
5. Furnish and install approximately 430-450 feet of 1" pipe, 4 solenoid valves, 9 ball valves, unions, elbows and other fittings.
6. Install a government furnished 1/3 HP pump, 75 gallon tank and a float switch in the 24k gallon tank.
7. Welding for weld-o-lets in the 24k gallon tank and L-Brackets to a corrugated metal pipe vault.
8. Trenching and backfilling approximately 160- 170 ft of trench for burying pipe and wire.
9. Electrical installing of a relay, circuit breaker, 4 solenoid valves and two pumps.
10. Furnish and install 5 yd^3 of unformed concrete with rebar anchors.
11. Furnish and install a corrugated metal pipe vault of 5' tall x 4' diameter with a steel lid of 1/8" thick x 5' diameter.
    and
12. Minor details not listed above.

Site Development Requisition

The site development contract requisition was signed and submitted for processing on April 6, 2012. Requisition No. 2012320700005

Site Development Contract

The site development contract No. R12PS32025 was advertised June 15, 2012 and closed on June 29, 2012. The contract was awarded July 24, 2012,

Figure 12 - Test facility being development

to Oden Construction Company, with the notice to proceed provided on August 31, 2012. The contractor mobilized and performed all aspects of the contract. The contact was considered substantially complete on December 3, 2012.

Concentrated Photovoltaic – Thermal Hybrid System (CPVTHS)

CPVTHS Design

The initial CPCTHS design was submitted to Reclamation in conjunction with the requirements for heat and electricity identified in the mass balance model prepared by the University of Arizona. Eric Brown who represents the renewable energy company CoGenra as their Senior Sales Engineer provided an initial quote for the system on March 29, 2012 which was based on the mass balance design.

CPVTHS Requisition

The CPVTHS requisition was approved on May 15, 2012. Requisition No. 2012320700008 was transmitted in the procurement office and approved for action on June 14, 2012.

CPVTHS Contract

The specification and drawings were transmitted to the procurement office on June 5, 2012. The cost estimate provided by CoGenra was provided to the procurement office on June 18, 2012.

Figure 13 - Constructing the CPVTHS

The CPVTHS system contract was awarded on September 18, 2012 to Ace Solar Systems. Ace Solar Systems elected to use the Cogenra SunDeck 2.0 Modules. These modules have a name plate production capacity of 5.2 kW/day for power generation and will produce 4.5 therms (1therm= 100,000 btu's). The system was constructed on site and tested. The final commissioning of the Cogenra CPVTHS system was complete on January 31, 2013. The system has been operational capable since commissioning with average output

running in the range of the name plate values. The system has not been run continually because of the lack of demand for the electricity and heat.

Figure 14 - Finished CPVTHS

System Operational Equipment

Various equipment to operate and control the system was installed at the site. The list and their function are:

Master switch panel – Separates the renewable power from the site equipment

Figure 15 - Master power controls

Sunny Island – This is the main charge controller for the solar energy system. Electrical energy being generated from the solar panels are fend into the Sunny Boy inverter and is then sent to the Sunny Island for use in the site equipment or sent to storage in the batteries. This equipment regulates the battery storage and manages electrical flows.

Figure 16 - Sunny Island

SmartFormer – This unit boosts the site power voltage from 120-volt to 240-volt for the occasion when 240-volt power is needed. A dedicated breaker in the power separation breaker box is available whenever 240 –volt power is requires.

Figure 17 - Smart Former

Sunny Boy – The Sunny Boy inverts are located on each of the CoGenra solar arrays. These Sunny Boy units convert 12-volt direct current (DC) power being generated by the solar photovoltaic panel to a standard 120-volt alternating current (AC). This electrical output is for use on various power consuming site equipment.

Figure 18 - Sunny Boy inverters

Communication Cabinet – The COGENRA Solar depicted below contains the Sunny Web Box. The Sunny Web Box allows for remote communication with the various systems at the site. This is accomplished with a wireless cellular modem. This allows remote access to the CoGenra equipment for monitoring and adjustments to the system as needed. This Sunny Web Box is connected and linked to the iBOS box which is depicted on page 23. This is also connected to the Sunny Island in order to monitor power production and the "State of Charge" of the battery storage system so remote monitoring of these systems can also occur.

Figure 19 - Communication cabinet

Figure 20 reflects the output coming from the CoGenra website showing the electrical generation and the heat production being produced from the CPVTHS. During this time of year the system was producing nearly 8 kWh per day and nearly 8 therms which is 800,000 British Thermo Units (btu's).

Figure 20 - Output from CoGenra website about the Leupp project

Figure 21 depicts the "State of Charge" for the battery storage system.

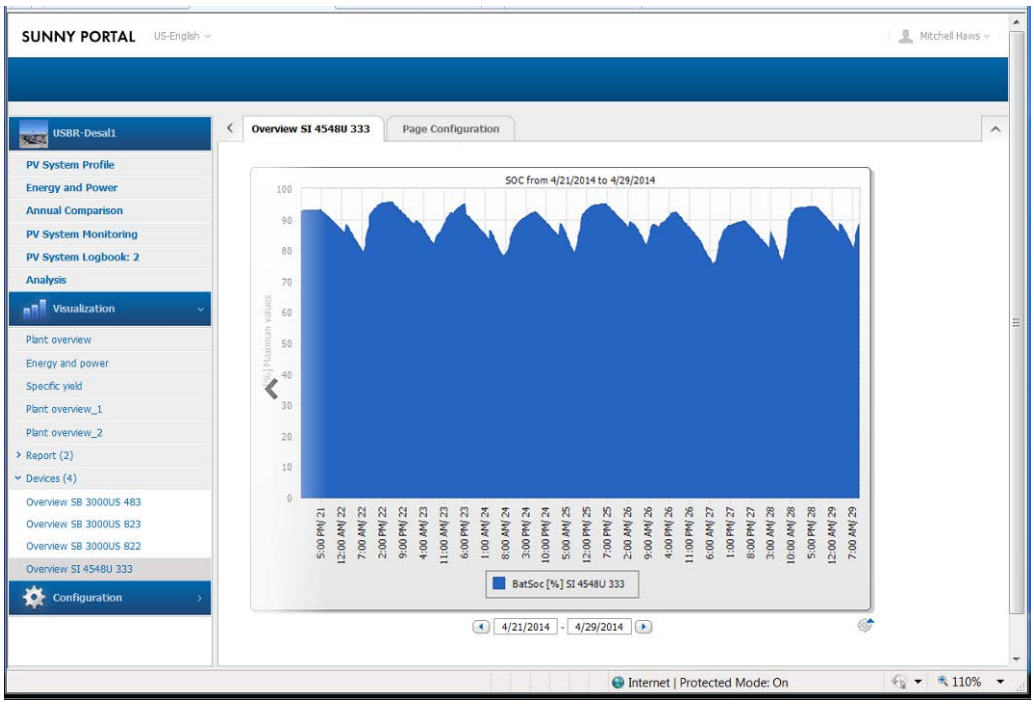

Figure 21 - Batteries "State of Charge" from the SMA Sunny Portal

Figure 22 - Battery Control System Shut-off – This control switch turns off power to the entire system preventing power to flow from or to the battery back-up system.

Figure 22 - Battery shut-off

Figure 23 is the Site Equipment Control Panel. This control panel is a programmable logic controller (PLC) which operates the site equipment for pumping water to the test facility, valve operation controls, winter heating systems, temperature controls, and works with the advanced water treatment system desalination equipment. Figure 24 is a sample of the data from the site that is available through remote access by way of the internet. Other data such as weather, heat production graphs, and weather graphs are also available remotely. Finally, different parameters such as starting and stopping site equipment, water pumping to the test site, and timers can be adjusted remotely using the PLC.

Figure 23 - Site Equipment Control Cabinet

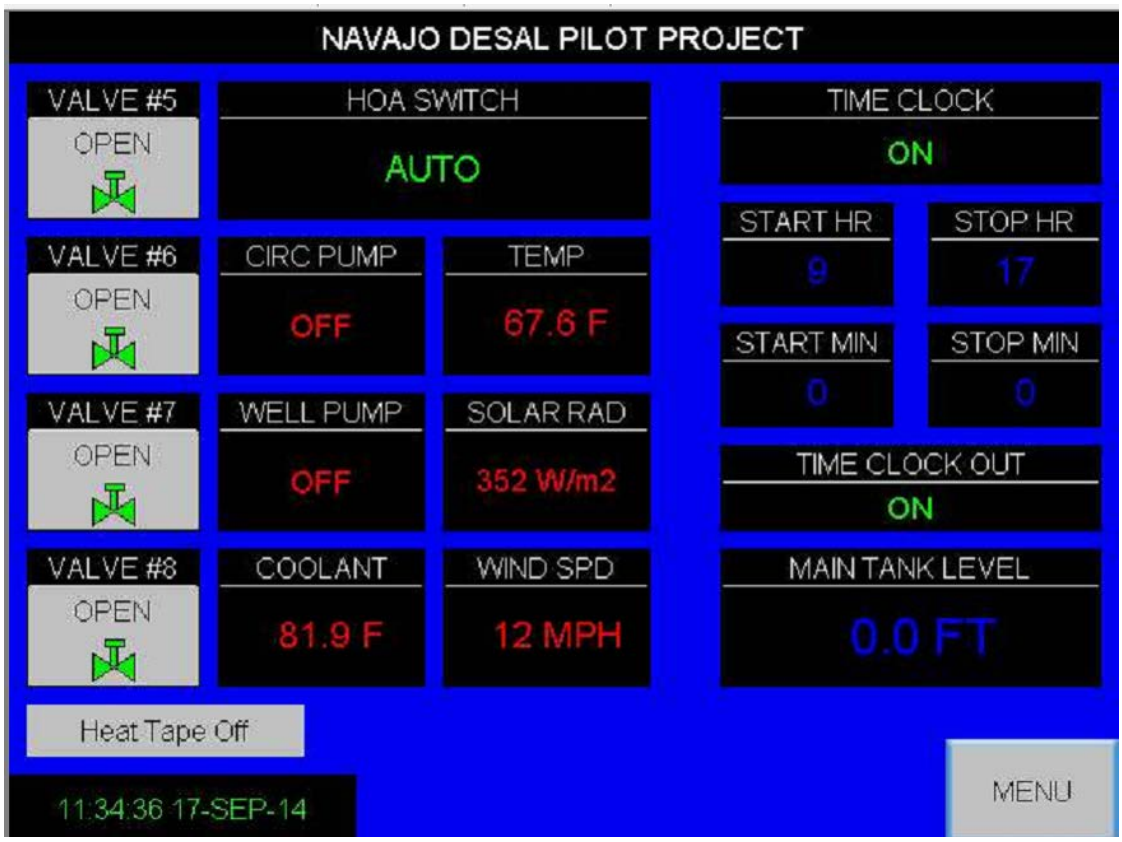

Figure 24 - Programmable Logic Controller Data Remote Readout

The iBOS control system for the CoGenra CPVTHS are located below the solar arrays. These units control the tracking system, the flow of the glycol for heat production, communicate to the Sunny Web Box, and communicate with CoGenra's home office in Mountain View, California. These are essentially the brain or operating system for the CPVTHS.

Figure 25 - iBOS

The solar desalination system in powered by renewable energy in an off-grid location. The enire system is dependant on the battery storage system. All power at the site runs throught the battery system. These are SunXtender 12-volt 129-amp batteries and total 1039 amp capacity. The battery state of charge is managed by the Sunny Island, Figure 16 and can be monitoried through the Sunny Portal indicated in Figure21.

Figure 26 - Battery Storage

Weather Station

A weather station was installed at the site to monitor various meteorological data. The weather station is a David Instrument's VantagePro-2 weather station control system including a solar radiation sensor for monitoring insulation. An Ocean Controls remote SCADA system was also installed for remote access to the meteorological data. The weather station monitors:

- Temperature
    - Inside the building
    - Outside the building
- Rain
- Barometric pressure
- Wind speed
- Humidity
- Sun location

- Insolation (watts per meter squared)
- Other meteorological data (sun rise, sun set, . . .)

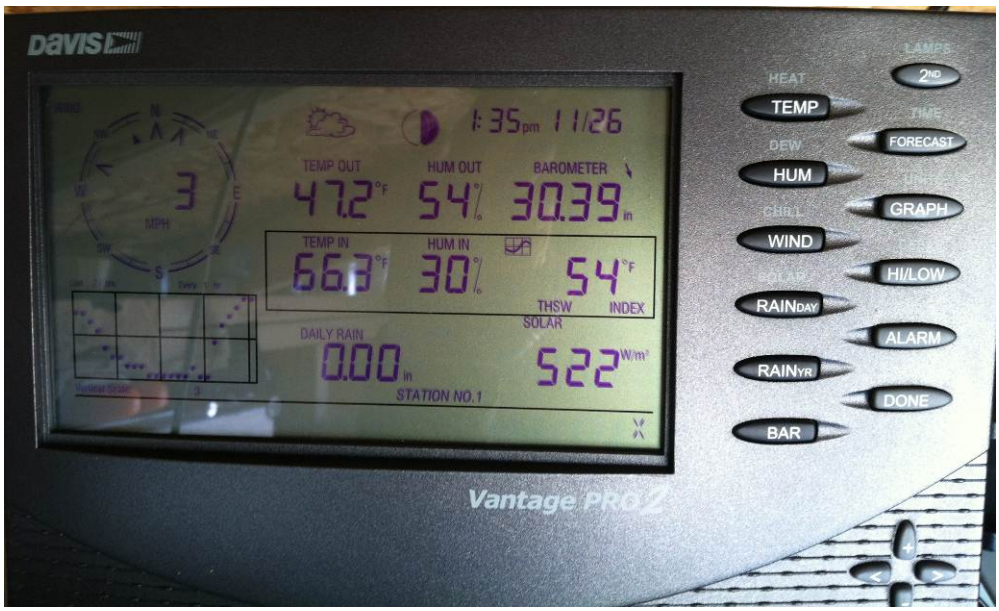

Figure 27 - Weather station console

Figure 28 - Weather station equipment

The weather station is self-contained and can operate independently of the site power system. A solar recharging unit along with self-contained backup batteries was installed to insure weather data is always available regardless of the state of the other site equipment.

Membrane Distillation

Membrane Distillation (MD) Conceptual Design for Site Development

The basic Membrane Distillation conceptual design was developed by Dr. Wendell Ela. A bench scale prototype was tested at Reclamation's Marana, Arizona test facility by Wendell and his student team. Under this research the pilot demonstration test is being deployed and constructed at the Well sited 5T-529 for the applied research application.

Mass Balance Model

The mass balance model created by Dr. Ela, Professor of Chemical and Environmental Engineering at the University of Arizona was provided to Reclamation in November 2011. This is the model used to determine the size of the system based on heat and power demand, water quality and other parameters.

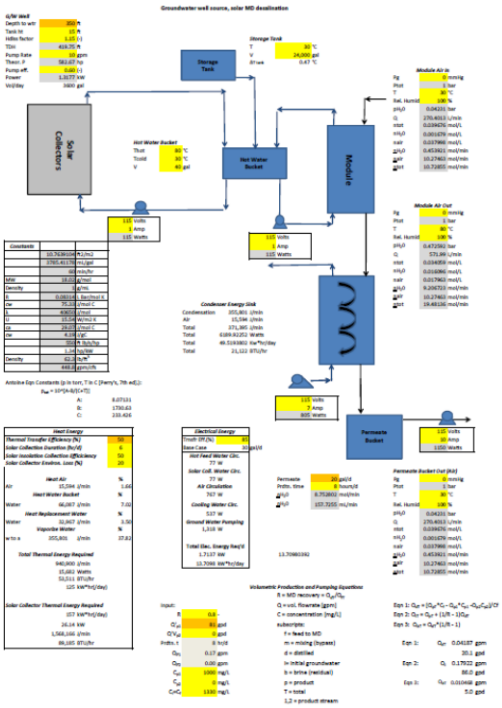

Figure 29 - Mass balance model

Membrane Distillation Conceptual Design for this Application

The University of Arizona has developed the design for pilot demonstration project based on and adapted from the bench scale prototype deployed at the Marana, Arizona test site.

Membrane Distillation Procurement

The MD requisition was submitted on January 25, 2013, requesting an award date of March 1, 2013. A cooperative agreement was awarded to the University of Arizona on September 16, 2013.

Membrane Distillation

Figure 30 - Treatment train fabricated at the University of Arizona

The University of Arizona began planning and developing the requirements to construct the membrane distillation system. They developed the final design and constructed the working units in the lab at the University of Arizona in Tucson. It was built with a modular design in order to fit the requirements for constructing at the Leupp test facility. The units were separated and ready for transport to the Leupp test site. On June 3, 2014 the membrane distillation system was transported to the Leupp test facility. During that week the University of Arizona students and staff re-assembled the desalination equipment at the site and began commission testing the system. System Programmable Logic Controllers were installed and connected to the desalination equipment.

In an effort to protect the desalination equipment the University of Arizona purchased and installed a structure which is portable fabric covered building which and can be moved to other locations but is durable for the local conditions. This structure will protect the equipment for the harsh conditions that exist at this site. Wind in the area at times reach 60 mile per hour. Therefore, it was necessary to protect this equipment from the potential damage these conditions may cause.

Figure 31 - Treatment train fabricated at the Leupp test facility with UA development team

Figure 32 - Desalination equipment protective shelter

It is anticipated that there will be about three-months' worth of data gathered on this system before the expiration of this research period under the existing Science and Technologies funding. A request for additional time and funds will be requested during the next Science and Technologies funding cycle in order to gather a full 12-months' worth of data about the capability and robustness of this concept.

Because of delays in the Reclamation's procurement office processing the cooperative agreement request, the award to the University of Arizona was nine month late. We had anticipated the work would have been awarded to the University of Arizona in March for development and construction of the desalination equipment in the warm months. However, the agreement was awarded in late September and the University was not able to prepare the design for constructions before the freezing temperatures at the site occurred. The University delayed deployment for the equipment to the test site for nearly nine month because of the potential freeze damage that will occur to an untested system.

A time extension was granted to the University of Arizona until September 30, 2015, with the hope that additional funds will be made available for the additional months of data gathering and equipment fine tuning.

Cost Benefit Analysis and Technology Transfer

The project also includes the development of a benefits and cost analysis of the solar energy powered desalination system by applying a triple bottom line (TBL) approach to assess the social, economic and observed environmental impacts of the solar desalination system in the area. A model is created to assess the value of the system to the community and inform a broader energy and water resource management strategy. The evaluation of the water supply reliability, energy savings, avoided water supply costs, system lifetime costs and financial analysis for the project will be included in the analysis. Technology transfer for the field-based solar-powered MD system will be conducted through training , information sessions with the residents and key stakeholders of the project and an online manual of the system operations to ensure operations, maintenance and parts replacement after the study period ends.

Cost Share

There is a great deal of interest in this project. The following organizations are financial contributors to this project:

Denver Research Office through the Science and Technologies program
The University of Arizona – Renewable Energy Network (REN) and the Department of Engineering
The Navajo Nation – Department of Water Resources
The Grand Canyon Trust
The Phoenix Area - Office Native American Affairs Office
The Provo Area Office – Planning Office

Conclusions

In the proposal for this research there were three research questions:

1. Are there opportunities to use impaired or brackish water resources not currently being used because of their marginal quality and treat them to potable standards in areas that are outside the traditional water and electrical power infrastructure grid?

2. Can a renewable energy treatment system be used in treating these marginal water supplies?

3. Can concentrating solar panels be used in a desalination treatment train to produce potable water supplies in these off- grid locations?

All three of these questions have been answered with this research.

A survey of the potential brackish water well was inventoried in the Southwestern Navajo Nation. One well was identified as the location where brackish groundwater could be improved by an off-grid renewable energy desalination system. That was is Navajo well 5T-529. This well is located about 15 miles northwest of the town of Leupp, Arizona.

A dedicated solar pumping system was designed and constructed as a stand-alone system to insure the 24,000 gallon water storage tank will remain full. This dedicated system also enables that releases can be made to the 24,000 gallon tank connect by a 7-mile long pipeline down gradient from this site.

A test facility was constructed at well site 5T-529. The test facility includes site equipment, a secured fenced-in area with concrete a pad, secure storage building and control house, anchorage for solar power plant and all necessary piping from the existing water storage tank to the test site and discharge pond. The renewable energy system that was selected for this project was a Concentrated Photovoltaic Thermal Hybrid System (CPVTHS), CoGenra SunPack 12 plant which is a concentrating solar system. This system was installed which is a low-concentration, photovoltaic and thermal power system that produces low-grade thermal energy (<100oC) and electrical energy for operating fluid transfer and control system devices. The system has parts that are easily replaced and utilizes a water/glycol mixture in a closed loop that cools the PV cell, capturing excess solar energy as heat.

A structure was constructed on the concrete pad to protect the advance water treatment system which was developed by the University of Arizona under the direction of the Principle Investigator for the university, Ms. Ardeth Barnhart. Finally the advanced water treatment system or membrane distillation system was constructed inside the protective structure under the guidance from Dr. Wendell Ela.

All of the equipment at the site have been commissioned and are operating. The solar pumping system and the CoGenra power plant are operating continuously. The advance water treatment system or membrane distillation system is only operating when the University of Arizona student and faculty are present. The first distilled water from the system was produced on July 10, 2014, which contained 5 part per million (ppm) total dissolved solids (tds). It is anticipated that during the next funding cycle the advance water treatment system will be configured to operate continuously. This entire system is anticipated to be an off-grid advanced water treatment system capable of providing better quality water for livestock with prospect of upgrading the system to a potable water treatment system for the local population.

Attachements

Attachment A – Navajo Nation Solar Desalination Research Pilot Demonstration Project

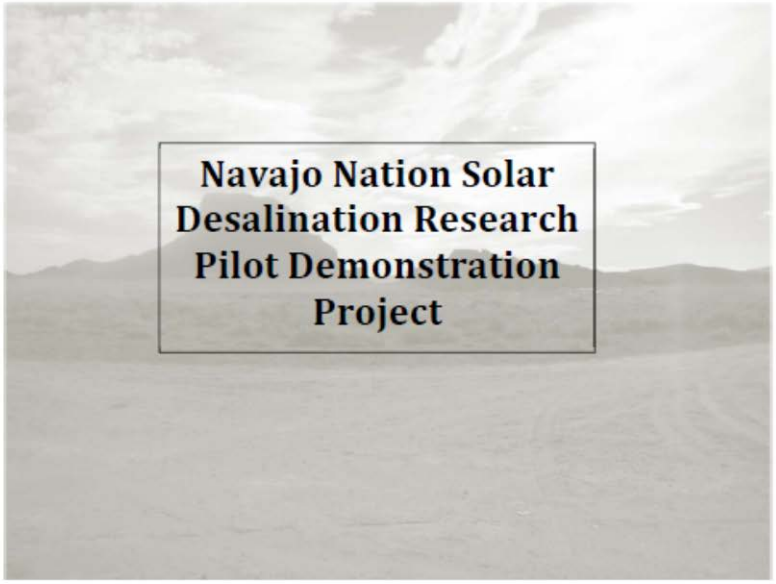

Prepared for Bureau of Reclamation
6150 West Thunderbird Road
Glendale AZ 85306-4001
Proposal ID - #R10AC32089
June 20, 2011
Addendum – January 20, 2012

Prepared by:
The University of Arizona
4715 N. Park Ave, Tucson, Arizona 85721
Ardeth Barnhart, Institute of the Environment
Wendell Ela, Department of Chemical and Environmental Engineering
George Frisvold, Department of Natural Resource Economics

Table of Contents

List of Figures

List of Tables

1. Executive Summary

In April, 2009, The Tolani Lake Chapter of the Navajo Nation passed a resolution requesting "the U.S. Bureau of Reclamation conduct a study of the Chapter to determine the most feasible cost, best use for human consumption and for agricultural purposes, the delivery of desalination of the Coconino Sandstone aquifer of the Little Colorado River basin..." As a part of that resolution, Reclamation entered into a cooperative agreement with the University of Arizona to begin a study of the quality of water in the Southwestern Navajo Nation and the feasibility of developing and deploying a pilot-scale solar-energy based desalination system that could be sustainably maintained and paid for by the residents of the Chapters in the study area. Four wells of interest were selected by the Bureau of Reclamation in a ground water sampling study in November, 2010.

The well sampling and water characterization included a full suite of inorganic and basic organic water quality parameters which were measured in the field and from samples taken to the laboratories of The University of Arizona. Analysis indicated that the wells sampled in the Bidahochi (well site 7T-517) and Leupp, areas had high salinity (TDS ~ 1300 mg/L), while the Dilcon (well site 7T-522) and Lower Greasewood (well site 7T-583) groundwater sampled contained TDS less than 400 mg/L. The Bidahochi water also was at or exceeded the Maximum Contaminant Levels (MCLs) for nitrate, arsenic and uranium. The Dilcon water exceeded the nitrate MCL, whereas the Lower Greasewood groundwater was marginally anoxic and exhibited elevated iron and manganese levels. The Leupp well site (05-529) draws from a regional brackish aquifer and had good quality water with the exception of TDS exceeding ~1000 mg/L. Well 05-529 represented the best location for an on-site solar desalination prototype to test the viability of water treatment in areas of high salinity.

The objective of the Reclamation study is to develop a new water supply incorporating an economically and culturally appropriate desalination technology that utilizes renewable energy to service areas lacking basic infrastructure for water and electricity. To meet these objectives, a somewhat new technology, membrane distillation (MD), was chosen as the water treatment technology for the study. It requires less intensive and frequent maintenance and is scalable over a much broader range of capacities than conventional membrane (e.g. reverse osmosis, electrodialysis) and thermal (e.g., multi-effect distillation, vapor compression) desalination technologies. In the initial stage of the study, sweeping gas MD was used as it improves the overall solar desalination 's applicability in terms of ready-accessibility of components and can be readily implemented in rural areas. This system produces product water with almost no salinity. The design production rate for the prototype was 30 gallons per day product water from Central Arizona Project feedwater (700 mg/L), which was sufficient to meet the study goal of producing 100 gpd of 500 mg/L TDS, potable water. R&D evolution of this prototype will include integration of a commercial solar thermal and photovoltaic system with scaling of the membrane components in the current MD system to meet a proposed 1000gal/day goal.

An analysis of the economic efficiency of the initial prototype system shows that if users were only required to pay to recover the operation, maintenance and replacement (OM &R) of the prototype system, the costs would range from $1.97 - $2.07 per 100 gallons depending on the brine disposal method. Estimated OM&R costs per 100 gallons for the prototype are lower than rates paid by water haulers in the region and reduce the fuel costs many residents incur by about $2.00 per 100 gallons. Initial estimates suggest that if local water haulers were only required to pay OM&R recovery rates, they would be paying less than they are currently for hauling water. Further research into improvements in the water treatment system and optimization with the solar energy component may yield yet lower OM&R rates overall where water hauling could be significantly reduced.

Results of listening session surveys conducted in three Chapters in Southwestern Navajo Nation indicated that over half of the residents are obtaining water from a well location. The majority were driving an average of 20 miles round-trip twice a week to obtain water for livestock and drinking. All respondents noted that while the quality of the water was not noticeably poor (odor, and taste), water obtained for livestock was sometimes hard to find and sometimes of poor enough quality to keep them from giving it to livestock. As a consequence of this, they sometimes had to sell livestock at a lower price or before they wanted to. Most of the survey respondents indicated that they were very interested in learning more about methods to purify water and willing to pay between $0.20 and $0.40 per 100 gallons for purified water for drinking and their livestock. While respondents indicated a willingness to support alternative methods of water purification, further studies will assess the ability of new water and power systems, integrated with renewable energy, to meet the needs of the community at a lower cost than they are currently paying and might pay with conventional system in place.

2. Introduction

Rural and remote populations often have limited economic capacity to attract conventional water and power development. Many of these residents haul livestock and potable water, have limited access to the power grid and reside in areas where water quality does not meet livestock or safe drinking water standards.

The Navajo Nation (Nation) consists of a distributed population and development centers in remote regions of a federally recognized Indian reservation which is larger than many states in the eastern United States. Various studies have reported that approximately 35% of the population lives without access to the electric grid and public water systems. Tribal members haul their potable and livestock water from public water systems located great distances from their homes. During periods of emergency water management resulting from drought, these water users are denied access to the public water system. These residents use the least amount of water, pay the highest price-per-thousand gallons and allocate the largest percentage of their income for power and water. Numerous studies have shown that populations with inadequate access to potable water and sanitary services have higher incidents of health problems.[1]

In 2010 Reclamation executed a cooperative agreement and funded a cost-share research initiative with the University of Arizona (UA). Reclamation had identified rural and remote populations that do not have access to conventional water and power resources. This presented an opportunity to investigate the potential for off-grid renewable energy and advanced water treatment technologies in these areas. The research included the investigation and chemical characterization of 4 existing wells in the southwestern region of the Nation (see Navajo Nation area map below), collection of baseline economic framework data and the development of a pilot-scale prototype system for off-grid water purification. A prototype was designed and deployed at a University of Arizona demonstration site in Marana, Arizona that produces up to 100 gallons of potable water per day. The system uses off-grid solar energy to drive the desalination/purification process. The prototype serves as a proof of concept of the system and when coupled with the economics, scale-up, and site conditions analyses, it provides the necessary basis on which to develop a field demonstration process on Navajo Tribal land. The knowledge gained from this initial phase represents a foundation for continued research and development for a pilot demonstration off-grid solar desalination system on-site in Southwestern Navajo Chapters[2].

[1] Bureau of Reclamation synopsis from the project overview
[2] Navajo Local Governance Act – established Chapters as a sub-division of Navajo Nation Government.

Desalination is an energy intensive process, so sustainable utilization of impaired water supplies in rural areas, not served by the public water and power system, must effectively incorporate renewable energy generation. The process must also incorporate environmentally sustainable management of the saline and other wastes that are generated in the water treatment system. In this pilot study, advanced water treatment components have been validated in the laboratory and then implemented and demonstrated at the University of Arizona desalination demonstration field site. It demonstrates the feasibility of solar-powered desalination using technologies that could be readily commercialized without extensive additional development. The entire process was designed specifically to operate as a completely autonomous, low maintenance system that can be operated by local personnel trained to operate and maintain the system. This is particularly applicable and valuable for small, remote communities faced with severe infrastructure, economic, and water quality challenges, such as exist on many tribal lands of which the Southwestern region of the Navajo Nation is representative.

Bureau of Reclamation Map of Area of Study

7

3. Well Water Sampling and Characterization

Four wells of interest were selected by Reclamation for inclusion in a well water sampling campaign conducted November 8-10, 2010. The survey included analysis for a full suite of inorganic and basic organic water quality parameters which were measured either in the field or in the laboratories at the University of Arizona. No effort was made to measure water production or well pumping metrics for the wells surveyed. Considerable assistance was received during the sampling from Reclamation, Navajo Department of Water Resources, and Navajo Tribal Utility Authority personnel. Reclamation supplied historical information on the physical characteristics of three of the four wells from which water was sampled. It along with physical sampling information collected in the survey are shown in Table 1.

	Well 7T-517	Well 7T-583	Well 7T-522	Well 5T-529
Geographic Region	Bidahochi	Lower Greasewood	Dilcon	Leupp
Operator[1]		NTUA	NTUA	NDWR
Aquifer accessed	Bidahochi formation	alluvium	Bidahochi formation	Coconino C
Completion year		1980	1958	1974
Completed depth, ft		161	150	500
Static water level, ft	125[2]	10.4[3]	75[4]	404[5]
Sampling point	storage tank outlet	well head sampling port	storage tank inlet	well head full flow

[1] NTUA: Navajo Tribal Utility Authority; NDWR: Navajo Water Resources Department
[2] measured during survey
[3] 1983 sounding
[4] 1958 sounding
[5] measured during survey

Table 1. Physical characteristics of wells sampled during November 8-10, 2010 survey of groundwater quality in the Southwestern Region of the Navajo Nation.

Sampling and Analytical Methods

For all sampling points, water was purged until pH, temperature, and conductivity changed less than 2% per minute. In addition, well 5T-529 was purged for one-hour before sampling to allow clearing of the pumped water. Analysis for pH, temperature, dissolved oxygen, percent dissolved oxygen, ORP, and conductivity were measured on-site immediately upon sample collection. All samples for off-site analysis were filtered through 0.45 micron syringe filters and preserved on ice until transferred to 4°C refrigeration in the UA laboratory. Samples for metal analysis (e.g., sodium, lead, calcium, magnesium) were acidified with concentrated nitric acid to pH < 2 immediately upon collection. Aqueous component analysis was conducted using a variety of instrumentation including inductively coupled plasma optical emission spectroscopy (ICP-OES), inductively coupled plasma mass spectroscopy (ICP-MS), ion chromatography (IC), total organic carbon analyzer (TOC), and various selective electrodes (e.g, pH, ORP, DO, conductivity). The specific instrumentation used for each technique follows:

ICP-OES Perkin-Elmer Optima 5300 DV

ICP-MS	Agilent 7500a
TOC	Shimadzu Total Organic Carbon Analyzer, TOC-V
IC	Dionex 600 DX

Results

The results for all components analyzed are shown in Table 2.

Well 7T-517 (Bidahochi). Of the four groundwater wells sampled, this well produced the poorest quality water. It has relatively high salinity (TDS ~ 1300 mg/L), is well over the nitrate drinking water maximum contaminant level (MCL) and is near or above the arsenic and uranium MCLs. In addition, the water exceeds the secondary maximum contaminant levels (SMCLs) for pH, TDS, chloride, sulfate, fluoride, and iron. The presence of high nitrate (and also total organic carbon greater than 1 mg/L) in the well water is indicative of the groundwater being under the direct influence of surface water which is exposed to agricultural fertilizer use or livestock habitation. For instance, well casings that are not sealed from infiltration by surface run-off in grazing areas commonly lead to nitrate contaminated groundwater. Because of the high salinity, membrane desalination would be indicated before potable use; however the high iron level would require iron removal pre-treatment prior to membrane application and the elevated arsenic and uranium would require post-treatment of the membrane concentrate.

Well 7T-583 (Lower Greasewood). The groundwater from well 7T-583 was below all MCLs and exceeded SMCLs for only iron and manganese. The water is taken from a very shallow alluvial aquifer and it is located off of the eastern edge of the major brackish aquifer underlying the southwestern region of the reservation, so it is expected that it would be less saline than the other groundwaters sampled. However, the water is anoxic as indicated by the low ORP and low dissolved oxygen measurements. In addition, a hydrogen sulfide odor was noticeable emanating from the water during sampling, which is consistent with an organic content greater than 1.0 mg/L and an oxygen depleted environment. This is also consistent with elevated iron and manganese levels, which would be expected to be in the more mobile and soluble Fe(II) and Mn (II) oxidation states, although this was not verified by iron and manganese speciation analysis. The general impact of the anoxic condition of the water is that it will be more likely to create taste and odor problems as a potable source and may lead to increased metal leaching from pipes (if the water is not aerated), particularly in warm weather.

Well 7T-522 (Dilcon). The groundwater was of high quality in terms of salinity and metals, but exceeded the MCL with respect to nitrate. As noted for well 7T-517, this is indicative of communication between surface run-off waters from agricultural/livestock areas and the groundwater. The water sampling for this groundwater was taken from a large holding tank, so the well itself was not surveyed and no information can be noted about the well's condition, depth to groundwater, or other factors that might explain the elevated nitrate level. Nitrate can be removed using ion exchange, membranes, or biological treatment and this would need to be implemented before the water could be used for potable purposes. It is recommended that if this water is considered further for potable distribution, that it be resampled and the analyses confirmed. At the time of sampling the large holding tank was being used heavily by road construction dust control tankers, so the well was presumably being pumped at a greater rate than normal. This could lead to water being accessed from aquifer depths not typically encountered or for the cone of depression to extent further radially than normal and, hence, water being drawn that would not be accessed under normal pumping conditions.

	517 Bidahochi (windmill/tank)	583 Lower Greasewood (pump/outlet)	522 Dilkon (open tank)	529 Leupp (pumped)	MCL	SMCL
depth	125 ft	shallow	-	404		
date	11/8/2010	11/8/2010	11/9/2010	11/9/2010		
temp, °C	11	13.48	15.31	15.89		
pH	8.52	7.65	8.15	7.5		6.5-8.5
ORP, mv	140.67	62	131	137.33		
D.O., mg/L	7.63	1.74	4.19	9.47		
D.O., %	76.1	18.67	45.7	100		
Cond., mS/cm	2.21	0.67	0.5	2.26		
TDS (calc), mg/L	1298	356	261	1330		500
TOC, mg/L as C	1.55	1.63	0.57	0.43		
Alkalinity, mg/L $CaCO_3$	253	268	200	208		
Cl^-, mg/L	263.2	54.4	18	474.5		250
SO_4^{2-}, mg/L	428.3	15.9	27.3	242.3		250
F, mg/L	2.150	1.102	0.360	0.247	4.00	2.00
Br^-, mg/L	0.163	0.344	0.176	0.134		
NO_3^-, mg/L	26.873	0.118	15.025	0.981	10	
avg Na^+, mg/L	410.71	67.42	50.93	254.10		
avg K^+, mg/L	2.70	3.67	8.37	2.66		
avg Ca^{2+}, mg/L	10.92	46.08	16.20	78.37		
avg Mg^{2+}, mg/L	9.47	20.06	20.30	52.30		
Si^{4+}, mg/L	0.60	1.09	0.63	1.68		
avg Fe, mg/L	0.31	0.45	0.02	0.87		0.30
avg Mn, mg/L	0.007	0.186	0.001	0.054		0.05
avg Zn^{2+}, mg/L	0.093	0.019	0.094	0.047		5.00
avg Ba^{2+}, mg/L	0.003	1.255	0.021	0.019	2.00	
Al^{3+}, mg/L	0.000	0.017	0.006	0.022		0.20
U, mg/L	0.029	0.003	0.008	0.003	0.030	
avg Si, mg/L	7.32	15.27	10.47	4.37		
As, mg/L	0.0141	0.0053	0.0014	0.0169	0.010	
Se, mg/L	0.0256	0.0001	0.0052	0.0010	0.050	
P, mg/L	0.014	0.033	0.106	0.016		
Pb, mg/L	0.00012	0.0012	0.00009	0.00061		
V, mg/L	0.035	0.000	0.007	0.000		
Be, mg/L	0.00015	0.00002	0.00001	0.00003	0.004	
B, mg/L	1.17	0.217	0.059	0.128		
Tl, mg/L	0.00513	0.00074	0.00150	0.01962		
Cr, mg/L	0.001	0.00124	0.00048	0.00104	0.10	
Co, mg/L	0.00009	0.00029	0.0001	0.0005		
Ni, mg/L	0.00044	0.0014	0.00044	0.01968		
Cu, mg/L	0.00733	0.0029	0.00158	0.0575		1.00
Ge, mg/L	0.00003	0.00005	0.00001	0.00016		
Zr, mg/L	0.00001	0.0002	0.00005	0.00013		
Nb, mg/l	0.00008	0.00002	0.00001	0.00002		
Mo, mg/L	0.0472	0.00062	0.00145	0.01208		
Ag, mg/L	0	0	0.00012	0.00002		0.10
Cd, mg/L	0.00007	0.000138	0.00001	0.00018	0.005	
Sn, mg/L	0	0.00001	0.00009	0.00004		
Sb, mg/L	0.00008	0.00001	0.00002	0.00002	0.006	
Ta, mg/L	0.0001	0.0003	0.0001	0		
W, mg/L	0.00015	0.00006	0	0		
Re, mg/L	0.00008	0.00003	0.00009	0.00001		
Hg, ng/L	11.5	12.8	9.93	9.01	2000	
Tl, mg/L	0.00002	0	0.00001	0.00001	2000	

Table 2. Water composition of ground waters sampled. Bold bordered values exceed Navajo EPA maximum contaminant level. Dashed border values exceed EPA secondary contaminant level. MCL: maximum contaminant level; SMCL: secondary maximum contaminant level.

10

Well 5T-529 (Leupp). This well draws from the large regional brackish aquifer as indicated by the depth to groundwater of about 400 ft and a TDS exceeding 1,000 mg/L. Other than salinity, the water is generally of high quality, although the elevated iron content would need to be confirmed by additional sampling and, if verified, treated before salinity mitigation is implemented. This well is normally pumped by a windmill-driven, reciprocating pump. In order to sample this groundwater the reciprocating pump apparatus was taken out of the well and an electrical submersible pump was placed below the water table. This likely caused a considerably higher pumping rate (estimated during sampling as about 20 gpm after initially starting at greater than an estimated 50 gpm) than would normally be experienced and hence entrainment of fines in the pumped water. The well was purged for slightly over 1 hour before sampling and during this time the product water cleared considerably, but iron (rust red sediment) and sand (gritty sediment) could still be seen in the bottom of the sample collection vessels containing non-filtered samples. It is recommended that extended pump testing of the well be conducted to evaluate the sustained yield and degree to which fines entrainment is naturally attenuated over time, if this well water is to be treated for potable or enhanced livestock watering purposes. In addition, it is recommended that aeration and settling/filtration be evaluated on the water to suggest what means might be most appropriate for iron removal, if this groundwater is to be desalinated by either thermal or membrane processes. The latter evaluation should be conducted simultaneously with the pump testing of the well.

4. Solar Desalination Technology

Technology Choice. Desalination technologies fall into one of two categories: thermal/mechanical technologies and membrane technologies. Although the driving force for some membrane technologies is a thermally induced pressure gradient, for simplicity and for grouping the technologies with the most commonalities, any desalination technology in which a semi-permeable membrane is employed is categorized as a membrane technology and those lacking a semi-permeable membrane are categorized as thermal/mechanical systems. In areas where the cost and availability of energy is a primary determinant in selection of the desalination technology, membrane technologies are almost always preferred over thermal/mechanical technologies (NRC, 2008, Desalination: A National Perspective). This energy consideration is particularly acute when considering desalination on the Navajo Nation.

The long-term objective of this Reclamation study is development of a sustainable new water supply incorporating an economically and socially appropriate desalination technology that may be employed as a component in an autonomous (off-the-grid and -pipeline) installation to satisfy the water and power needs of distributed, small, remote tribal communities. The primary attributes of the desalination process developed under the Bureau of Reclamation Agreement #R10AC32089 are:

1) off-the-grid, stand-alone operation;
2) robust design requiring minimal expertise and upkeep for long-term operation;
3) utilization of only off-the-shelf parts so that replacement/upgrade components are readily accessible; and
4) potable water production at a economically competitive level in a socially acceptable manner.

A primary component of the scope of work for this S&T grant is deployment in the field of a prototype, proof-of-concept technology meeting the above criteria. In determining the most appropriate desalination technology to field prototype; conventional high temperature, mechanically intensive, or high pressure technologies (e.g., mult-stage flash distillation, mechanical vapor compression, reverse

osmosis, electrodialysis) were not further considered because of their inability to meet criterion 2 and, to a lesser degree, criterion 3. Other new technologies such as dew-vaporation and forward osmosis failed to meet criterion 3. In order to meet criteria 3, a multi-effect distillation (MED) process was specified in the original proposal because the technology was well established and components are readily available. However, a newer technology, membrane distillation (MD) has a number of advantages over MED particularly for the case of implementation in remote, challenging environments. MD requires less intensive and frequent maintenance, is scalable over a much broader range of capacities without significant re-engineering, and is less sensitive to water quality and environmental perturbations. As the initial stages of the BOR project were undertaken, sweeping gas MD (SGMD) was being developed in parallel under a separate funding arrangement, and by December, 2010 the SGMD development had progressed so it could be implemented using solely off-the-shelf components at a cost that was estimated to be comparable to MED, but with greater durability, longer design life, and greatly increased scalability to address a much greater range of water production capacities and feed water qualities.

Another configuration of MD, direct contact membrane distillation (DCMD), is also being evaluated in other laboratories (most notably by a team led by New Jersey Institute of Technology researchers) and in the University of Arizona laboratories, however at the present level of development it could also not meet criterion 3, so it was not considered for field prototype testing. Based on the additional benefits of SGMD over MED and the fact that SGMD had evolved to meet all of the basic attributes required of the system, the demonstration project emphasis was switched to installation of an MD process at the Marana, Arizona, Desalination Research and Pilot-Test Facility (DRPTF). It is believed that SGMD relative to the other alternatives evaluated will significantly improve the overall solar desalination project's applicability, likelihood of success, and ability to be readily implemented at other remote sites. The balance of the desalination technology discussion in this report pertains to development, validation, and testing of SGMD to meet the four project criteria.

SGMD Theory and Operation. The sweeping gas membrane distillation (SGMD) system utilizes a hydrophobic, capillary tube membrane module to greatly increase the specific interfacial surface area (m^2/m^3) for evaporation of water. The hydrophobic nature of the membrane surface resists water wetting and excludes water from passing through the open membrane pores, which range in size from 0.2-2 μm diameter. Water on the feed side of the membrane evaporates at the pore opening and water vapor migrates through the pore under a concentration gradient (figure 1). The fluid on the product side of the membrane is gas (typically air) for sweeping gas MD, although liquids (typically pure water) play this role in direct contact membrane distillation. For the latter liquid collection case, the product water must be at a lower temperature than the feed water, thus maintaining the partial pressure at the air/product water interface lower than at the interface on the feed-water side. This necessitates that the membrane act as a thermal insulator, so that water vapor, but minimal thermal energy, passes from the feed to product sides of the membrane. In contrast, in the sweeping gas MD system, the air on the product side of the membrane can be the same temperature as that of the feed water and is most efficient if it is. As the sweeping air is warmed, its capacity to hold water vapor (saturated vapor pressure) increases, which increases the pressure gradient driving water vapor transfer from the feed to product side of the membrane. Therefore, the membrane's thermal conductivity has much less impact on performance.

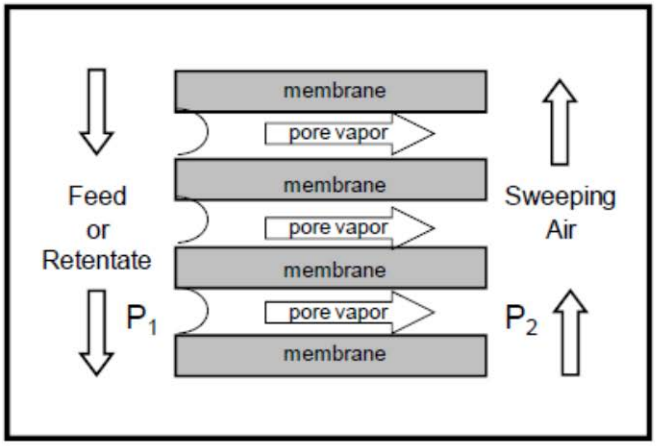

Figure 1. Schematic flow of fluids through the hydrophobic, microfiltration membrane in sweeping gas membrane distillation. P_1 is the saturated vapor pressure of water at the temperature of the feed stream and P_2 is the water vapor pressure in the sweeping gas.

This distinction between the direct contact and sweeping gas MD processes is critical in membrane selection and dictates the type of membrane that is appropriate for each type of MD process. The MD desalination system prototyped at the University of Arizona Pilot-Scale Desalination Research Facility (UA PSDRF) was specifically designed to only utilize off-the-shelf, readily accessible components, so that operation, maintenance and replacement of a field, full-scale production unit would not require materials-specific expertise or difficult to obtain parts. This criterion is generally important, but is particularly significant for remotely deployed units where the utilities often operate with restricted budgets and technical expertise. There are no off-the-shelf, commercially available and economically affordable MD modules containing membranes with low thermal transfer properties. The commercial (as opposed to experimental, research-type) modules with sufficiently hydrophobic membranes to make them suitable for MD purposes contain very thin (~100 µm) membranes which readily transfer heat, making them unsuitable for direct contact MD. Direct contact MD processes have some advantages over sweeping gas MD, particularly higher product flux rates (10-25 gal/ft^2·d versus 1-10 gal/ft^2·d), however the unavailability of off-the-shelf membranes suitable for direct contact MD has led the project team to select sweeping gas MD as the process of choice for deployment on tribal lands.

Figure 2 shows the process flow diagram for the system prototyped at the Marana test facility and proposed for demonstration-scale deployment at the Black Falls site.

13

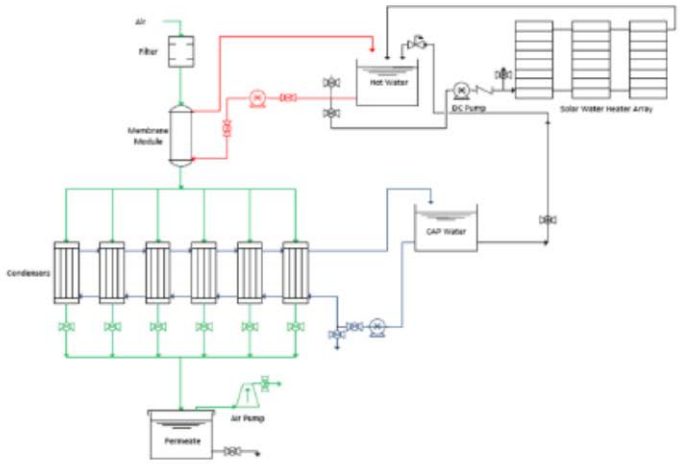

Figure 2. Process flow diagram of solar desalination technology installed at the UA PSDRF as a prototype for the demonstration unit proposed for deployment as a pilot demonstration at well 05T-529 in the Black Falls area. The fluid loop in black denotes the solar water heating loop and CAP make-up water line. The red denotes the hot feed (brine) water circulation through the SGMD membrane module, the green denotes the air (sweeping gas) passage through the module and condensers, and the blue denotes the condensers cooling water cycle.

The system is comprised of three fluid circulation loops: a hot water feed loop ("feed loop"), an air collection loop ("air loop"), and a cooling water circulation loop ("cooling loop"). Feed water is continuously cycled through the solar collectors and the hot water storage tank during daylight hours to maintain the hot water tank temperature in the 65-85˚C range. Hot feed water is also circulated in a closed loop between the hot water tank and the membrane module(s) and provides the hot feed water driving the pervaporation process across the membrane. In the field demonstration installation the solar collectors provide the thermal energy for water heating. The air loop in the deployed system can be operated in either a closed or open configuration. Figure 8 depicts the open configuration in which ambient air is drawn into the system through a 5 µm air filter to remove dust and particulates, passed by the shell side of the capillary membranes in the MD module where it is heated and near-saturated with water vapor, delivered through the tube side of a single pass, shell-and-tube condenser where the vaporized water is condensed as the temperature is decreased to near ambient, and finally expelled back to atmosphere after passing through an air/water separation tank where the product water accumulates. In the closed configuration of the air loop the air exiting the air/water separation tank is recirculated back into the air filter ahead of the membrane module rather than being expelled to atmosphere. The conditions specifying use of a closed versus open air loop are described below. The final fluid circulation loop, the cooling loop, cycles cool water from a large storage tank (≥ 5,000 gal) through the condenser(s) to provide the cold sink for condensing water vapor and cooling the air. The large storage tank also provides make-up water to the hot water storage tank to replace water

evaporated across the membrane from the feed loop and acts as the surface storage and equalization tank for water pumped from the groundwater well. Because of its large size relative to the flowrate through the cooling loop, the water in the large storage tank remains at near average ambient temperature.

The choice between utilizing a closed or an open air loop is dictated by a combination of the relative humidity of the ambient air and the temperature difference between the air exiting the air/water separation box and the ambient air. Since air leaving the separation box is saturated (with respect to water vapor), if it is exhausted to atmosphere the difference in water vapor pressure between the ambient air and the saturated air is lost (wasted) from the system. When the relative humidity of the ambient air is high and the temperature of air leaving the separation box is near ambient, then this loss is minimal as shown in the spider diagram of Figure 3. However, if the ambient air relative humidity is low and/or the separation box exhaust air temperature is much higher than ambient, then this loss can be substantial (on the order of 20-40% of the produced water). In this latter case a closed loop is indicated so that no loss is experienced, while in the former case, the simpler and lower head loss, open configuration is indicated. Using Figure 3 the net effect in terms of produced water wastage can be readily quantified and the decision made whether a closed or open configuration is preferable with the prevalent conditions. In the proposed pilot demonstration system for Black Falls deployment, a single valve will select between closed and open configurations and this choice would be expected to be made on approximately a weekly basis to adapt to average seasonal conditions.

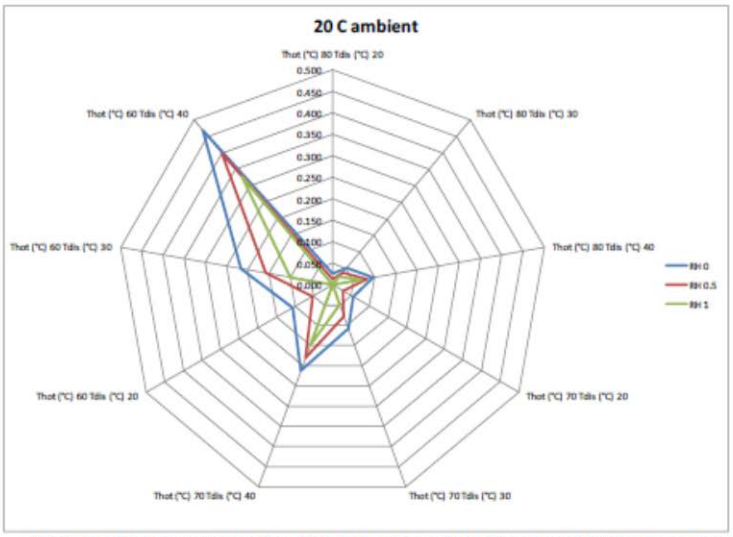

Figure 3. Spider diagram of fractional product water wastage in open configuration from a sweeping gas membrane distillation unit as a function of hot feed water temperature (Thot in °C), relative

humidity of ambient air (RH), and air loop exit temperature (Tdis in °C) assuming an ambient air temperature of 20°C. Analogous diagrams for other ambient air temperatures have been constructed and will be utilized to match configuration (open or closed) to operating conditions.

Field Prototype Design. The salinity of the Central Arizona Project (CAP) water to be desalinated at the DRPTF in testing the SGMD averages 720 mg/L TDS. Therefore, to meet the secondary maximum contaminant level of 500 mg/L TDS, a 30% reduction in product salinity must be achieved through desalination. Since SGMD produces a product water with essentially no salinity, a blending ratio of 70:30 raw:distilled product will meet the SMCL. Therefore, the design production rate for the prototype is 30 gpd to meet the 100 gpd product water goal. The SGMD designed to meet this production rate for treating CAP water is based on empirical data and on relationships gained in bench-scale testing of SGMD membrane modules in the UA laboratories and heat and mass balances for scale-up to prototype scale.

The membrane of choice was determined from previous MD work in our lab to be a polyvinylidene fluoride (PVDF) material. The module chosen for prototype use was a LiquiCel 4x13 Extra-Flow Membrane Contactor with a total membrane surface area of approximately 8.1m^2 (manufacturer's specifications). In the laboratory, a brine temperature near 80°C, which is near field operating conditions, produced a water production rate of approximately 20mL/min/m^2 or 2.54gal/d/m^2. Using this data, the required membrane area to produce 30gal/d is approximately 11.8m^2. The membrane area in the selected module is about 30% less than this value. The module was undersized because additional performance increases were expected to be achieved since the bench-scale unit had not been optimized relative to heat recovery and increased production if condensation in the module is allowed, and the air exiting the bench-scale unit was saturated so additional production could be achieved by increasing the air loading per unit of membrane area. It was deemed important to rectify these suboptimal design issues as much as possible in the field prototype system rather than over design the system, so that a more realistic scale-up costing for eventual full-scale field deployment could be made. The design of the solar collector loop for the prototype was based on a system-wide energy balance. Assuming no energy recovery and no heat losses, the theoretical energy use rate of the thermal system is the summation of the energy required to evaporate 30 gallons of water per day; the energy needed to raise the water temperature of the hot water tank plus the replacement water (for that evaporated) to approximately 80°C; and the energy required to heat the air passing through the module from ambient temperature to 80°C. The total energy required is calculated using Equation (1)

$$Q_h = \omega_{w,h} c_{p,w} \Delta T_w + \omega_a c_{p,a} \Delta T_a + \omega_{w,v} \lambda_{w,v} \qquad (1)$$

Where:

Q_h = thermal energy consumption rate [J/min]
$\omega_{w,h}$ = mass flowrate of water (tank + replacement product) (kg/min)
ω_a = mass flowrate of air (kg/min)
$\omega_{w,v}$ = mass flowrate of water vaporized (kg/min)
$c_{p,w}$ = specific heat of water (J/(kg·C))
$c_{p,a}$ = specific heat of air (J/(kg·C))
ΔT_w = temperature change of water (°C)
ΔT_a = temperature change of air (°C)
$\lambda_{w,v}$ = heat of condensation of water (J/kg)

For the specific case of interest with the following parameters:

cold air and water at 30°C,
module feed water and effluent air at 80°C,
1.0 bar pressure throughout,
air saturated with respect to water vapor throughout,
30 gal/8 hr day production,and
40 gal hot water reservoir,

the total thermal energy required by the system is 673,000 J/min or 90 kW·hr/d.

This energy balance calculation and the accompanying mass balance calculation for design of the field prototype are incorporated in a spreadsheet model. The model may be run in either a design mode, as is the case above where the production rate is known and the air flow rate is desired; or in a rating mode, in which the air flow rate, degree of saturation, and temperatures are known and the production rate is desired. The print-out of the model result for the design case described is shown in Figure 4.

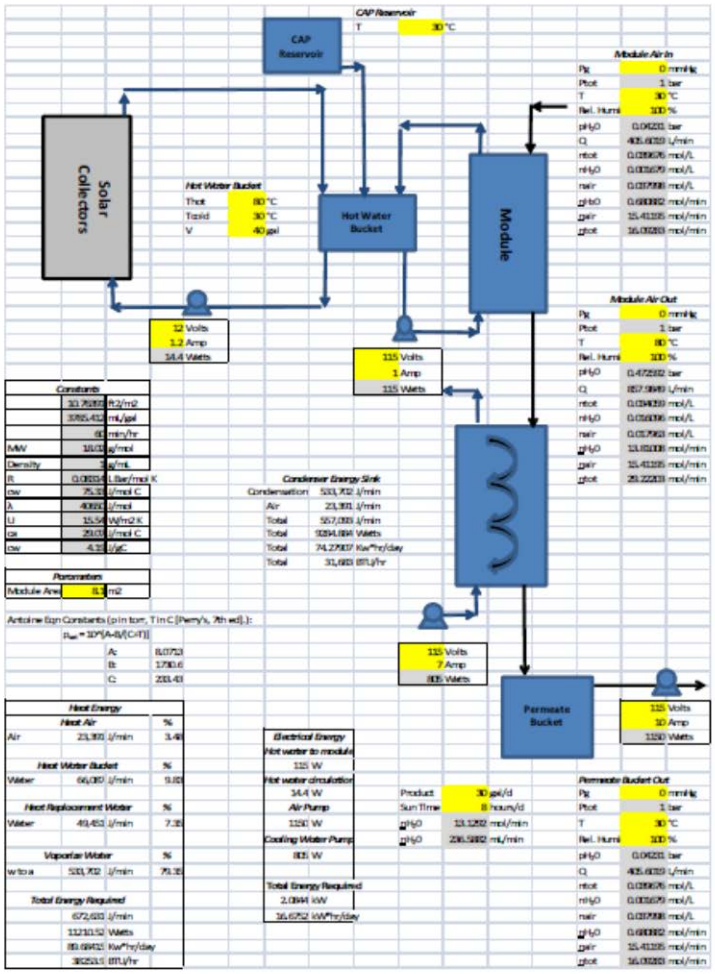

Figure 4. Result of mass and energy balance model for design of field prototype system. Yellow highlighted cells are model input and gray cells are model output.

18

The only source of thermal energy to the system is the solar collector, so it must produce on average 90 kW·hr (in an eight hour solar day). The average solar radiation for a flat plate solar collector in the winter is 6 kWh/m^2/day (National Renewable Energy Laboratory, http://rredc.nrel.gov/solar/old_data/nsrdb/redbook/atlas/Table.html). Performing the calculations yields a required solar collector size of 15 m^2 or 160 ft^2. Due to monetary and size constraints, three - 4'x10' (total of 120ft^2) solar collectors were plumbed in parallel in order to collect the energy. Though the area of solar collectors is not sufficient using the average solar radiation in the winter, the 6 kWh/m^2/day is very conservative for summer conditions, so the 25% undersizing was not deemed critical to final prototype performance. A Lange PVD5 DC pump was connected to a 15W photovoltaic (PV) panel, which provides power to the pump. The pump constantly circulates water between a hot water tank and the collectors in order to maintain a working temperature of approximately 80°C. For field deployment it is recommended that a tracking PV and solar thermal collector system be used, which typically increases energy output by 20-30% and a non-freezing working fluid be used through the solar collector so the system may be operated without risk of damage to the collectors in freezing conditions.

In order to size the condensers, a commonly used equation in heat-exchanger design was used. Equation (2) predicts the required heat-exchanger area to dissipate a specified heat flow.

$$A_o = \frac{Q_T}{\Delta T_{lm} U_{om}} \qquad (2)$$

Where:
A_o = outside area
Q_T = total heat load (condensing + cooling product water)
U_{om} = overall heat transfer coefficient
ΔT_{lm} = logarithmic (ln)mean temperature difference

For countercurrent flow Equation (3) applies:

$$\Delta T_{lm} = \frac{(t_1' - t_2'') - (t_2' - t_1'')}{\ln\frac{(t_1' - t_1'')}{(t_2' - t_2'')}} \qquad (3)$$

Where:
t'_1 = temperature of air in
t'_2 = temperature of air out
t''_1 = temperature of water in
t''_2 = temperature of water out

Utilizing equations 2 and 3 and assuming a conservative overall mass transfer coefficient for water air heat transfer of 50w/m^2°C and the other design parameters detailed above, the total required surface area for the condensers is approximately 11.19m^2 or 120ft^2. To meet this requirement, 6 condensers, each with a contact area of 20.72 ft^2, were used in the setup. The condensers were purchased from McMaster-Carr and are termed "aftercoolers". They are single pass (1-1)shell and tube heat exchangers, each containing 76 – ¼" copper tubes. The air passes through the tubes, while the cooling water is circulated on the shell side. The shell is made of brass.

The hot water loop that feeds the membrane module has two variables of interest. The first is temperature, which is controlled by the hot water tank. No attempt is made to keep the hot water tank at a certain temperature throughout the entire day, although this is suboptimal with respect to overall system production. Since the saturated vapor pressure of water increases non-linearly with temperature (Figure 5), the higher the temperature at which vaporization occurs, the greater is the vapor pressure gradient and, hence, the faster the rate of mass transfer. It is recommended that full-scale field deployment incorporate a heat sensor switch to activate the module production loop only after the hot water tank reaches a critical water temperature. The second controllable variable is the hot water flow rate into the module. According to data from the laboratory investigations, 1.5gpm/(m^2 membrane) is sufficient to maintain a water temperature drop through the module of less than 5°C.

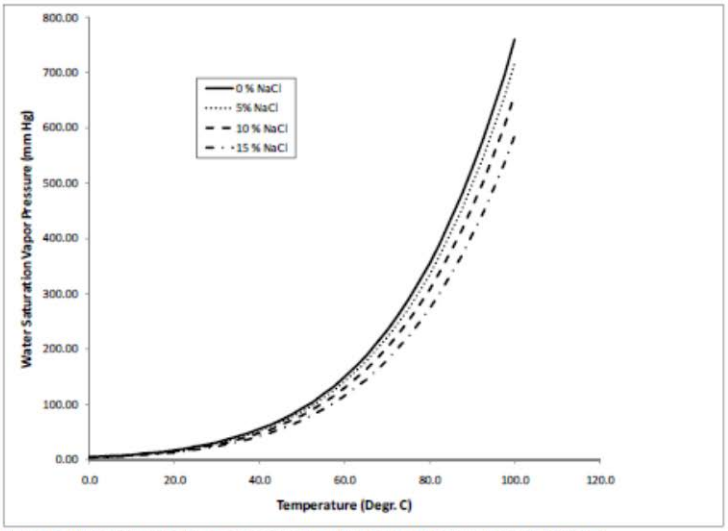

Figure 5. Water saturated vapor pressure as a function of temperature and salinity.

In order to pump the hot water nearly 15 vertical feet into the module for the field prototype, a 115V AC TACO 1/8HP hot water circulator pump was chosen. The pump has a maximum flow rate of approximately 3gpm and can be controlled with a valve on the flowmeter.

The design of the air loop depends on a single variable, air flow rate. Determining the air flow rate requires simultaneous solution of the water and air mass flow equations through the module and the condensers (high and low temperature components). This is incorporated in the mass and energy balance model described above and shown in Figure 4. The model calculates the air flowrate necessary to yield the specified target water production rate assuming the air leaving the module is saturated. For the field prototype case this yields and air flowrate of about 400 L/min at 30°C and 1.0 bar. In practice, this is a slightly suboptimal solution since the mass transfer rate of vapor through the membrane goes to

zero when the receiving air is saturated. Therefore, a slightly higher air flow rate is implemented in practice, so that a net driving gradient is maintained throughout the MD module's length.

The air blower that was chosen for the field site was based on the laboratory experiments. According to the lab results, an air flow rate of at least 90L/min was required for a module with a surface area equal to 1.3m^2. The surface area of the field module is approximately 8.1m^2, so the target field air flow rate was 560L/min (19.8cfm). The chosen air blower has a power rating of 115V and 10A with a maximum, open air flow rate of about 40cfm to allow for the increased air flow rate over design for the reasons discussed above.

The cold water condenser loop is the only part of the system designed to dissipate the energy collected by the solar collectors. Essentially, it is dissipating the energy released by the water as it condenses in the condensers. In order to determine an appropriate water flow rate, an increase in water temperature through the condenser of less than 5°C was considered acceptable. Using the first term of Equation (1) with a water flow rate of 10gpm and energy flux of 574.25kJ/min, the following was obtained:

$$574{,}247\frac{J}{min} = \left(10\frac{gal}{min} * \frac{3785.41mL}{gal} * 1\frac{g}{mL}\right) * \left(4.18\frac{J}{g°C}\right) * (\Delta T)$$

Yielding a $\Delta T = 3.63°C$

Since the change in temperature was less than 5°C for a reasonable flow rate of 10gpm, these parameters were chosen for the design. The determined flow rate of 10gpm was obtained by using a Dayton 1/2HP Portable Utility Pump, which constantly cycles cool water through the condensers. Figure 6 shows the desalination field prototype components as implemented and Figure 7 shows the solar collector array and hot water receiving tank located behind the solar collector array.

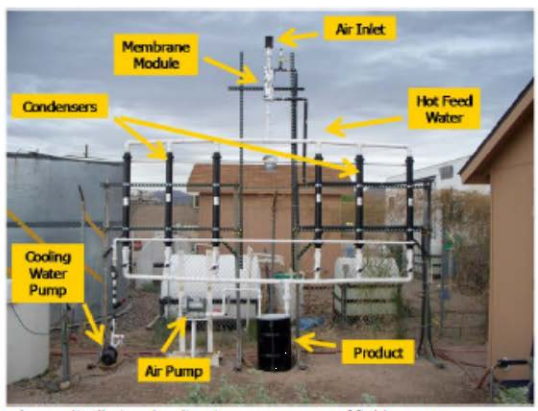

Figure 6. Membrane distillation desalination components of field prototype.

Figure 7. Flat-Plate Solar Collector Array

5. Economic Analysis of the Solar Desalination System

System physical capital costs

Costs for items were obtained for the 100gal/day unit by either using actual purchase prices for individual items or quoted market prices in cases where items were available free to the laboratory.

Table 3. System physical capital costs for the MD solar desalination units

	100 gallon / day unit
Hot Water Loop	$6,112
Hot Water to Module Loop	$5,903
Condenser Water Loop	$5,600
Condenser Air Loop	$1,650
Structure	$1,345
Total Physical Capital Costs	$20,610

22

Installation and instrumentation costs

For the 100g/day unit installation costs are estimated to be 1.6% physical system capital costs. Instrumentation and yard improvement costs are 4% of system capital costs, while construction expenses are 8.1% of system capital costs. Costs also include those for an 8-foot-high fence enclosing the unit to protect it from the elements. At a cost of $10 per linear foot, the 204 linear feet of fencing would cost $2,040. Additional costs include gates and posts ($1,500) and installation ($1,000) for a total fencing cost of $4,540 (Table 4).

Table 4. Installation and instrumentation costs

	100 gallon / day unit
Installation of equipment	$333
Instrumentation	$833
Yard improvement	$833
Construction expenses	$1,667
Fence around desalination unit	$4,540
Total installation / instrumentation costs	$8,206

Brine disposal costs

Two alternative methods of brine disposal are considered, each with different additional fixed costs (and OM&R costs, discussed below). Salts may be collected using evaporation ponds to collect the salt slurry and with periodic removal of settled materials. Brine can also be removed via environmental discharge, allowing it to flow back into the well. Fixed (and OM&R) costs are higher using evaporation ponds for brine disposal. The lower cost of environmental discharge comes at a price of placing salts and other compounds back into the groundwater. If salts are the only materials accumulating in the brine, then environmental impacts of doing so will be slight. However, if other contaminants accumulate in the brine, such as arsenic or uranium, then removal of these materials and disposal off-site would be preferable, and any additional costs associated with regulation of these elements will be taken into consideration.

Table 5. Additional fixed facility and brine disposal costs under two alternative disposal methods

Brine disposal via evaporative ponds	
Cost of excavation	$1,000
Cost of pond lining	$500
Evaporation pond fence	$600
Cement slabs (3)	$750
Total additional fixed costs (evaporative ponds)	$2,850
Brine disposal via environmental disposal	
Cement slabs (3)	$750
Discharge pipe and disperser	$200
Total additional fixed costs (environmental discharge)	$950

Interest costs

If physical capital and other initial fixed installation, site preparation, construction, and brine removal costs are financed through loans, the cost of loan interest payments must be included in the overall project costs. The amortization factor can be used to determine annual payments necessary to pay off a loan on fixed capital investment given an interest rate and length of loan. The amortization factor, a, is

(1) $a = i(1+i)^n / [(1+i)^n - 1]$

where i is the interest rate and n is the life of the loan (assumed here to equal 25 years, the life of the facility). The annual cost of paying fixed costs is then $a \times FC$ where FC represents all fixed costs. The total of all fixed costs plus interest charges are then $a \times FC \times n$. Total interest costs, TIC are

(2) $TIC = a \times FC \times n - FC = FC(an - 1)$

Table 6. Total interest costs as a function of interest rate by method of brine disposal

		Total fixed costs using evaporation ponds	Total fixed costs using environmental discharge
		$31,666	$29,766
Interest rate	Amortization factor	Total interest costs	Total interest costs
6%	0.0782	$30,262	$28,446
4%	0.0640	$19,009	$17,869
2%	0.0512	$8,883	$8,350

Table 6. Interest costs by method of brine removal under different assumed interest rates. With a high interest rate of 6%, interest costs are nearly equal to the total fixed capital costs. If financing could be obtained at 2% instead of 6%, total interest costs would fall by more than $20,000.

System OM&R costs

The cost of the membrane module for the 100gal/day system was $5,196 (Table 7). Modules require replacing every 7 to 10 years, or three times during the 25-year life of the facility. This amounts to $5,196 x 3 = $15,588. The system also requires cleaning using citric acid as a chemical flushing agent. The estimate cost of cleaning is $25 / year for 25 years. If brine is disposed of using evaporative ponds, salt slurry removal is also required three times during the life of the facility at a cost of $250 per time. OM&R costs are $678.52 / year (if evaporation ponds are used) and $648.52 / year (with environmental discharge).

Table 7. System OM&R under alternative facility scales and brine removal methods

OM&R with evaporation pond	
Membrane replacement (3 times during facility life)	$15,588
Membrane cleaning (once per year for 25 years	$625
Salt slurry removal (3 times during facility life)	$750
Total OM&R	$16,963
Total OM&R per year	$678.52

24

OM&R with environmental discharge	
Membrane replacement (3 times during facility life)	$15,588
Membrane cleaning (once per year for 25 years	$625
Total OM&R	$16,213
Total OM&R per year	$648.52

Delivered water costs

Table 8 presents summary cost values and estimates of delivered water costs in $ per 100 gallons. It is assumed that the facility is available for operation 90% of all days in a year. Delivered water costs are reported per 100 gallons because this a common unit of measure used at reservation water points. Tribal members can purchase water at some chapter house facilities with prices in the range of $3.00-$3.50 per 100 gallons. Initially we assume that all fixed costs are financed via a loan with an annual interest rate of 6%. At this rate of interest, total interest charges are quite large, nearly as large as the nominal fixed costs.

The cost of delivered water ranges from $9.06 / 100 gallons (with environmental discharge) to $9.61 / 100 gallons (with evaporative ponds).

Table 8. Summary cost by method of brine disposal

Method of brine disposal	Evaporative pond	Environmental discharge
System Capital Investment	$20,610	$20,610
Installation, site preparation, instrumentation	$8,206	$8,206
Fixed cost for evaporation ponds	$2,850	—
Fixed cost for environmental discharge	—	$950
Total fixed costs	$31,666	$29,766
Interest costs (25-year, 6% loan)	30,263	28,447
OM&R with evaporation pond	$16,963	—
OM&R with environmental discharge	—	$16,213
Total costs		
Annualized total costs / year	$3,156	$2,977
Annualized OM&R costs / year	$678.52	$648.52
Water delivered in gallons / year (90% plant availability)	32,850	32,850
Delivered water cost in $ per 100 gallons	$9.61	$9.06

Interest payments can form a substantial share of total project costs (Table 7). With an interest rate of 6%, interest payments account for more than 38% of total costs. Interest payments are roughly a third of total costs with i = 5%, 28% of costs at i = 4%, and 22% of costs at i = 3%.

Table 9. Effect of interest rate on the share of total delivered cost comprised of interest payments (by method of brine removal)

Interest rate	Evaporative Ponds	Environmental Discharge
i = 6%	38.4%	38.2%
i = 5%	33.5%	33.4%
i = 4%	28.1%	28.0%
i = 3%	22.1%	22.0%
i = 2%	15.4%	15.4%
i = 1%	8.1%	8.0%

Effect of interest rates and construction grants on per unit costs of delivered water

Table 9 illustrates that fixed costs and interest payments to finance those costs comprise most of the cost of delivered water. It is possible, however, for a small-scale solar desalination for under-served tribal communities would qualify for loan guarantees reducing the cost of borrowing, outright grants for construction and installation, or combinations of both. Figures 8 and 9 show the delivered cost of water under different interest rates (6%, 4%, 2%, 0%) and under different levels of subsidy of fixed costs (0%, 25%, 50%, 75%, 100%). A 100% fixed cost subsidy would amount to a grant covering all fixed costs, so that the only OM&R costs remained to be paid.

Figure 8. Delivered water cost (per 100 g) by interest rate and fixed cost subsidy rate (100 g / day system w/ evaporative ponds)

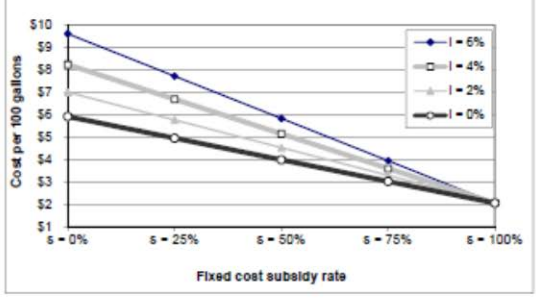

Figure 8 shows that with no fixed cost subsidy and a 6% interest rate, delivered water costs are between $9 and $10 per 100 gallons. Figure 8 assumes costs for a facility using evaporative ponds. Reducing interest rates to 0% would reduce costs to about $6 per 100 gallons. A 100% subsidy would reduce costs to around $2 per 100 gallons in OM&R costs. The upper and lower lines in Figure 8 form a triangle showing what delivered costs would be for every interest rate / fixed cost subsidy combination. Figure 9 repeats this exercise when environmental discharge is used for brine disposal.

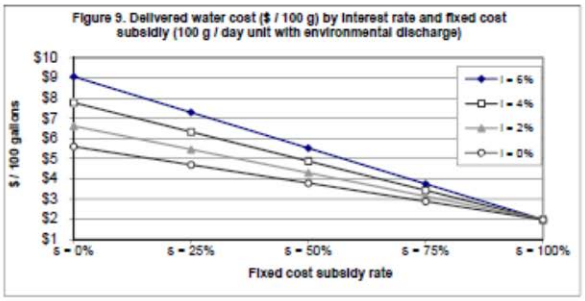

Figures 8-9 show what combination of interest rate and fixed cost subsidies would be necessary to reduce delivered water costs to a level members of the local community are currently paying. Water haulers obtaining water from tribal chapter house water points pay between $3.00 and $3.50 per 100 gallons. Simply reducing interest rates to 0% would be insufficient to bring total costs per 100 gallons below $3.50 per 100 gallons. A combination of construction grants amounting to at least 75% of fixed costs, combined with interest rates at or below 2% would be needed bring costs below $3.50 per 100 gallons.

OM&R and cost recovery

If water users were only required to pay to recover OM&R, their costs would range from $1.97 to $2.07 per 100 gallons depending on the method of brine disposal (Table 8). Estimated OM&R costs per 100 gallons are lower than rates paid by water haulers using chapter house well points. Costs around $2 per 100 gallons are also lower than the fuel costs that many residents incur driving to water sources.

Table 10. Total OM&R costs for MD desalination unit by method of brine disposal

Total OM&R costs using:	$ cost per 100 gallons
Evaporative ponds	$2.07
Environmental discharge	$1.97

It remains an open question whether residents would be willing to pay $2 more per 100 gallons for water at a site they currently use because the water was now treated by the solar desalination unit. Survey respondents said that they would be willing to pay more for treated water and also stated willingness to pay up to $0.40 more per 100 gallons. The survey, however, did not ask if respondents would be willing to pay $2 per 100 gallons more for water at the site the currently use.

Sensitivity analysis

Adding labor costs to OM&R

In the baseline OM&R cost calculations above, labor costs for membrane replacement, membrane cleaning and salt slurry removal were not included. However, these labor costs would need to reach

$329 / year before OM&R per 100 gallons increased by 1¢. At $15 / hour in labor costs, this would amount to 22 hours of labor per year. Annual membrane cleaning would require less than one day of labor, as would membrane replacement (once every seven years). Removing brine via environmental discharge requires no additional labor, while salt slurry removal (with evaporative ponds) is required once every seven years. Labor OMR costs are unlikely to increase total OM&R costs by 1¢ per 100 gallons and thus are in the realm of rounding error.

Membrane lifetime
Banat and Jwaied (2008) found that membrane lifetime was a key factor affecting delivered water costs in a small-scale solar desalination unit. If membranes require replacement four times during plant life instead of the assumed three, then OM&R costs per 100 gallons increase to the $2.60-$2.70 per 100 gallons range. If membranes need replacement five times during plant life, then OM&R costs would be $3.24-$3.33 per 100 gallons. This higher cost is still comparable to what water haulers currently pay at chapter house well points.

Summary of economic feasibility

The cost estimates suggest that a water-user payment schedule of about $2 per 100 gallons would be sufficient for recovery of OM&R costs. These costs are lower than the $3.00-$3.50 cost per 100 gallons local residents pay at chapter house water points and lower than current fuel costs many residents incur driving to water sources. Whether specific individual household would be willing to pay $2 per 100 gallons for treated water at a specific site requires further research. However, a payment schedule necessary to cover OM&R appears as affordable as currently available sources of water.

Financing costs for investments in physical capital, construction, and installation are a major component of total delivered water costs. Loan guarantees, construction grants, or combinations of both could reduce financing costs to a level where delivered costs are comparable to what local water haulers are currently paying for water. Low or no-interest loans to finance construction and other fixed costs would be insufficient to bring delivered water costs down below the $3.00-$3.50 level currently paid at chapter house well points. Construction grants equal to 75% or more of project fixed costs would be needed to accomplish this.

The initial estimates are promising in that they suggest that if local water haulers were only required to pay for OM&R recovery, rates would be less than rates currently paid.

6. Infrastructure Variables in the Selected Test Area

The American Community Survey, administered by the US Census Bureau, provides information on physical housing characteristics by Indian Reservation Chapter. The study area included Leupp, Tolani Lake, Dilcon, and Ganado Chapters. Data was obtained from the 2005-2009 ACS 5-year estimates. Less than a third of households in any of the chapters have utility supplied gas or electric heating (Figure 10). Wood remains the dominant source of home heating.

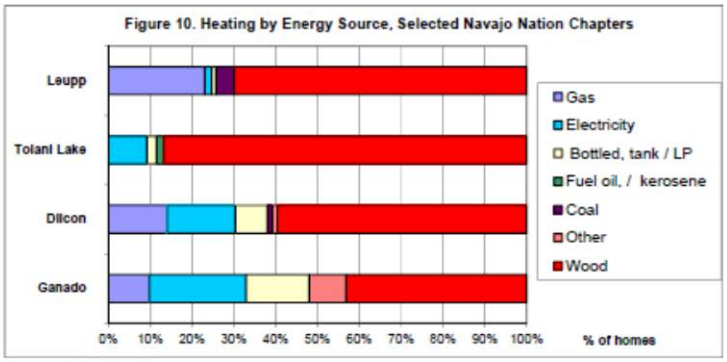

Source: ACS, 2005-9

About half the housing units in Tolani Lake and Leup lacked complete plumbing facilities. In Tolani Lake Chapter, 53% of housing units lacked complete plumbing (Figure 11). The percentage lacking complete plumbing was 31% for Ganado, 39% for Dilcon and 49% for Leupp. To have complete plumbing facilities, a housing unit must have all three of the following: (a) hot and cold piped water; (b) a flush toilet; and (c) a bathtub or shower.

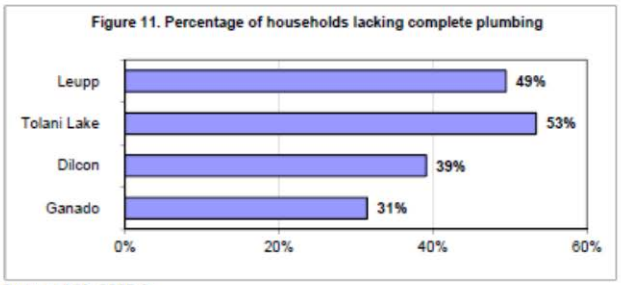

Source: ACS, 2005-9

A high percentage of housing units also lacked complete kitchen facilities (Figure 12). To be considered having complete kitchen facilities a housing unit must have (a) a sink with piped water, (b) a range or cook-stove, and (c) a refrigerator.

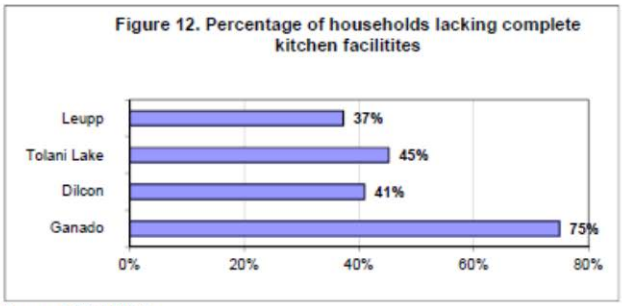

Source: ACS, 2005-9

Three-quarters of housing units in Ganado lacked complete kitchen facilities. Between 37% and 45% of the housing units in the other chapters lacked these facilities. Figures 10 - 12 illustrate that a higher percentage of the housing units in the study area lack access to piped-in water and to grid-supplied electricity,

7. Listening Session Surveys Responses

Listening sessions were conducted with local residents at three chapter houses within Southwestern Navajo Nation; Leupp, Dilkon and Ganado, to establish a baseline cost for water and energy use for residents living in these Chapter areas. Surveys were collected from 15 participants at these chapter houses. The respondents were asked to answer 34 questions related to water use and hauling practices, quality and access to water and type of generation used for electricity in the home. The following list is a sample of survey questions that were asked:

1. Where do you get most of your water?
2. How many miles do you have to travel to get most of your water?
3. How often do you haul water?
4. How often do you have water quality related problems with your main source of water?
5. Do you get drinking water from a different source? If so, how much does it cost?
6. How many special trips for drinking water do you make? How many miles do you drive to make that trip?
7. Have you ever had to sell livestock because of issues related to water quality and accessibility?
8. Would you be interested in learning about methods to purify water?
9. Would you be willing to pay $0.20/100 gallons for livestock water from a solar desalination system? Would you be willing to pay $0.40/100 gallons for livestock water from a solar desalination system?
10. Would you be willing to pay $0.20/100 gallons for drinking water from a solar desalination system? Would you be willing to pay $0.40/100 gallons for drinking water from a solar desalination system?
11. If you had access to more water what new things would you do or buy?
12. How do you get electricity? Is it reliable?

Listening session participants noted that water was sometimes unavailable at their primary source when it came from a well location and required extending trips farther to search for alternative sources averaging about 24 miles per week (see Table 11.).

	Miles traveled per trip	Trips per week	Miles per week
Mean	11.4	4.3	48.9
Median	7.5	2.0	24.0

Table 11. Miles traveled to haul water for livestock and drinking

Bottled water was purchased primarily from grocery or convenience stores at a cost of $0.25 to $1.99 per gallon. Costs at Chapter distribution points were between $8 - $20 and $30 - $35/ 1000 gallons depending on the location.

Responses from residents with a primary source of water from a well

About half or 8 respondents indicated that their main source of water was from a well at another location other than their household. These locations were either at a spring with a well, the Luepp watering station, natural springs or chapter house watering points. They traveled on average 20 miles roundtrip to collect their water approximately 2 times per week. Costs for this travel ranged from $20.00 per week to $20/ 1000 gallons and costs in time, gas and maintenance of vehicles used to transport water.

Most of these respondents indicated that they never or sometimes experienced having problems with taste, odor, color, chlorine or salts in their main source of water but half were unable to draw all of the water they needed from that source. Drinking water was primarily purchased from a grocery or convenience store at costs that ranged between $4/ case and $0.75 - $1.50/ 3 gallons of water. All respondents indicated that they made special trips to obtain drinking water and traveled between 20 – 60 miles round trip for drinking water.

If residents raised livestock they sometimes were not able to find enough water for them, if they did have water, the quality was sometimes too poor for livestock to drink. As a consequence of this and because grazing conditions were indicated to be poor, all respondents indicated that they sometimes or often had to sell livestock at a low price or before they wanted to.

All respondents indicated they would be somewhat or very interested in learning about methods to purify water, most would definitely consider paying a charge to have the well water they use treated by a solar desalination process. The majority of respondents indicated that they would be willing to pay $0.20/100 gallons and $0.40/100 gallons for purified water from solar desalination that was treated to supply water for livestock consumption. All of the respondents were willing to pay $0.20/100 gallons for water from a solar desalination system for drinking water at their well location and 6 were willing to pay $0.40/100 gallons for purified drinking water. The residents who responded no to this question

either were satisfied with their current water source or indicated they didn't have a well.

Half of these residents used a generator for electricity in the home and the other half had access to the grid. They listed being able to watch movies, DVD's, microwave food, have an electric range and iron clothing and a garage or shop as activities they would do if they had more access to electricity. The people using a generator paid between $80 - $125 a month .

Responses from residents with a primary source of water from NTUA or piped into the household.

Respondents that had water piped to their households from NTUA, still traveled to get drinking water. Half of them indicated always having problems with taste, odor, color, chlorine, and salts in the water. Additional water for drinking was purchased at grocery or convenience stores and additional water was needed to support livestock. The water they were often unable to find water and sometimes the water quality was too poor to support livestock consumption. However residents with water piped into their households indicated that they rarely or never had to sell livestock because of poor quality or access to water.

All Respondents listed farming, gardening, laundry, showers, and saving time in travel and cost of hauling water as things that they would participate in if they had access to more water.

8. Conclusions: Future R&D Activities Derived from this Study

The work described in the foregoing discussion has verified at the general level the feasibility of utilizing solar-driven membrane distillation to address the chronic problem of the lack of available and affordable water to many of the residents of the Navajo Nation, and by extrapolation, to residents in off-grid locations in many water scarce regions. This is the necessary prerequisite step to addressing the problem, however a number of additional R&D activities must follow before implementation of technology at specific locations is actually and sustainably realized. The following short discussion describes critical next steps that must be taken both to address the specific issues and conditions at the Black Falls location on the Navajo Nation, and more generally at similar, but not identical, locations elsewhere.

Evaluation of and selection criteria for concentrate management strategies.
All desalination processes generate a concentrate stream as a by-product of high quality water production. The potentially ready to deploy, management options for this concentrate stream are limited to surface discharge, well injection, and evaporation ponds. There are attractive, emerging alternatives, such as selective salt recovery, although these are considered to not yet be at the stage of development or validation to be considered as implementation alternatives for the immediate Navajo Nation objectives. Evaporation ponds are the default choice for the Black Falls implementation as the regulatory and technical requirements to deployment are well established, land availability is unlikely to be an impediment, and climatic conditions do not preclude their applicability. However, more environmentally and economically attractive management may take the form of well injection or surface discharge. It is recommended that these options be evaluated for the specific Black Falls case and a general selection decision methodology be developed to allow comparative evaluation of their applicability for other locations.

Refinement of Black Falls site assessment.
Well 5T-529 was selected as the most promising site for deployment of the solar desalination technology based on the work described above. However, detailed assessment of the well itself, the productivity of the aquifer, and the surface site and infrastructure is still prudent before demonstration technology deployment is undertaken. Immediate questions to be addressed are what is the condition, nature, and depth of the well; can the Coconino Sandstone aquifer penetrated by the well provide a sustainable water supply of the quantity and quality required; what existing infrastructure (e.g., tankage, piping and accessories, structures) can be utilized; and what site preparation (e.g., grading, fencing, access routes) is required.

Study and selection of technology financing alternatives.
Investigation and alternative recommendation for the means and projected value of short- and long-term financing of the demonstration project and more importantly, full-scale, subsequent, distributed power/water generation sites in the area is necessary to ensure economic viability and community acceptance of the technology deployment. This will include identification of economies of scale and the capacity of water users to pay O,M&R. Repayment of capital in some form of public private partnership may also be considered This study must include the consumers ability to pay; the opportunities for extra-community financing; the long-term application to regional-scale deployment; the sensitivity of the alternatives to likely changes in social, technical and economic conditions; and the impact deployment of the technology may likely have on the area's population and economic conditions.

Integration of energy storage and recovery.
The MD technology described has been developed as a proof-of-applicability demonstration with only modest focus on energy use and water production optimization. For instance, the current prototype does not incorporate any energy storage nor thermal heat recovery components in the system, so the water production duration is limited to the solar day and no thermal energy expended for water pervaporation is recovered to decrease the net system requirements. Inclusion of hot water storage capacity and control technology and of condensation heat recovery equipment conceptually promises to significantly increase the daily water production rate of the SGMD technology and to lower the capital and OM&R costs associated with it. It is suggested that short-term conceptual and field evaluation of energy storage and recovery refinements to the system be conducted to refine the final design selected for demonstration deployment.

MD model development and validation.
Although a number of theoretical mass and energy models have been developed and tested describing various MD processes, there is no practically validated model for use in scaling solar MD systems in general and solar SGMD systems in particular. In the work described above an adiabatic model for mass and energy balances was developed for the SGMD system, however it is constrained by its lack of consideration of mass transfer limitations, energy losses with fluid conveyance and storage, incorporation of solar collector location and type considerations, and ability to incorporate energy storage and recovery components. The broader applicability and refinement of the technology is largely dependent on iterative improvement and validation of the model to incorporate these and other technology considerations.

Development of tool to evaluate optimal regional-scale deployment of decentralized potable water, livestock water, and energy generation capacity.
The autonomous energy/water generation technology evaluated in this project is outside the normal selection alternatives evaluated for implementation in dispersed, rural environments. It promises the

opportunity to significantly improve the living conditions and economic viability of this and similar regions. However, because the types of technologies involved are not conventional, the normal optimization algorithms and methods for water and power infrastructure siting are largely inapplicable. There is a dearth of information and methods for informing optimal location, capacity, and social integration of decentralized energy and water technology, such as is needed to implement a distributed and regional-scale infrastructure system to provide livestock and potable water and power to the rural residents of the Navajo Nation. The outcome of the development of these systems can be utilized to inform and construct a model of solar desalination and electrification applicable in regions of the nation with similar environmental, technological and social conditions.

9. References

Banat F, Jwaied N. (2008). Economic evaluation of desalination by small-scale autonomous solar-powered membrane distillation units. *Desalination* 220:566–73.

Desalination: A National Perspective. (2008). Committee on Advancing Desalination Technology. National Research Council of the National Academies. Washington D.C.

Resolution of Tolani Lake Chapter, Western Navajo Agency, Winslow, AZ . Resolution No. TL-04-03-09. April 11, 2009.

Addendum – Results of modification to authorize and incorporate the activities associated with the site survey and assessment of well site No. 05T-529.

Water Quality and Sampling

Pump testing and ground water quality sampling was conducted on Well 5T-529 from August 16-18, 2011. The water quality survey included analyses for the same suite of inorganic and organic water quality parameters which were measured during the earlier November, 2010 sampling effort. The same sampling and analytical methods as described for the previous year's sampling were applied here. Both filtered (0.45 micrometer nominal pore size) and unfiltered samples were collected for off-site, compositional analyses. This allowed not only quantification of the colloidal/dissolved water chemistry, but also, by difference, the particulate chemistry. In interpreting the following results, it is emphasized that the values reflected in the unfiltered sample analyses are not representative of the water quality that would be received in a storage tank-fed access point or a desalination treatment system as is envisaged for potential deployment at 5T-529. In the former case, particulate matter pumped from the well would sediment out in the storage tank (such as the 12,000 gal tank now on-site) and would not be delivered in post-tank water. In the latter case, a treatment system would draw water from the storage tank, or in the less likely case of direct feed from the well, a cartridge filter or similar particle removal device would be implemented ahead of the water treatment equipment to protect the equipment from particulate fouling and abrasion. Despite the non-filtered sample water composition showing some influence of particles (as seen by its variation from the filtered water composition for samples collected at the same time), in no case was sufficient particle matter observed in a sample to be discernible by the naked eye or to preclude utilization of a single syringe cartridge filter to complete filtering.

In addition, the August, 2011 sampling effort included collection of a single sample at well 5T-537, located approximately 10 miles north of 5T-529. 5T-537 is situated closer to the Black Falls community – one of the Navajo communities identified as having a particular need for augmented power and potable water supplies. 5T-537 ground water is withdrawn with a windmill-driven pump. Because the windmill was not operational at the sampling time, the 5T-537 sample was collected from the above ground storage tank outlet pipe leading to a stock watering trough. Thus, the composition of this sample does not reflect fresh, pumped ground water quality, but includes any water composition changes caused by an indeterminate period of storage in an open, above ground tank of an estimated 12,000 gal.

The water composition measured is shown in the following table (Table 12).

Nov. 2010 versus Aug. 2011 Water Quality. The water composition measured during the August, 2011 sampling largely confirmed the results from the initial sampling of 5T-529 conducted in November, 2010. 5T-537 was not sampled in November, 2010. The only difference of note between the 5T-529 sampling results is in the dissolved oxygen numbers. During the initial sampling in 2010, the pump was not set as deeply in the well as in 2011, and there was some question at the time whether or not some air entrainment occurred as the well drawdown progressed. The dissolved oxygen concentration and percentage of saturation suggests this might have been the case. In the 2010 sampling the water sample was 100% saturated with oxygen, whereas in the 2011 the oxygen saturation level was closer to 70%, more in line with expectations for deep groundwater. In addition, the noticeable iron fines observed by eye in the 5T-529 water in 2010 were significantly reduced during the 2011 sampling. The dissolved iron concentration was comparable in the two sampling efforts, which suggests the dissolved water composition had not changed, but that well casing flaking and fines entrainment by pumping was reduced in the second event. This is expected, since the well had been video sampled and pumped on the day prior to the August 18, 2011 first samples being taken, which would tend to clear the well casing of flaking and allow the early pumping of fines to have dissipated by the time sampling occurred.

August 18 - 19 2011 Well Water Quality Analysis: Navajo Nation

well ID sample type date/time	51529 filtered 11/18/11, 1028	51529 unfiltered 11/18/11, 1028	51529 filtered 11/18/11, 1420	51529 unfiltered 11/18/11, 1420	51529 filtered 11/18/11, 1630	51529 unfiltered 11/18/11, 1630	51529 unfiltered 11/19/11, 0805	51597 unfiltered 11/19/11, 1130	MCL	SMCL
Depth	375.25	NA	375.25	NA	376.03	NA	324.95	NA		
Date	08.17.11	NA	08.17.11	NA	08.17.11	NA	08.18.11	08.18.11		
Temp, °C	16.20	NA	17.97	NA	18.03	NA	17.3	24.89		
pH	7.72	NA	7.75	NA	7.73	NA	7.6	8.56		
ORP, mv	102.00	NA	162.00	NA	162	NA	60	215		
DO, mg/L	5.95	NA	6.51	NA	6.71	NA	1.61	4.75		
DO, %	68.90	NA	73.00	NA	77	NA	18.7	62.6		
Cond., mS/cm	2.33	NA	2.32	NA	2.341	NA	2.263	6.484		
TDS (calc), mg/L	1312.50	NA	1306.05	NA	1317.71	NA	1310.74	4084.50		
TOC, mg/L as C	0.9655	NA	0.3958	NA	0.3726	NA	NA	NA		
Alkalinity, mg/L CaCO3	154.62	NA	170.29	NA	150.63	NA	NA	NA		
Cl^-, mg/L	454.49	NA	446.83	NA	444.99	NA	NA	NA		250
SO_4^{2-}, mg/L	255.17	NA	229.52	NA	229.20	NA	NA	NA		250
F^-, mg/L	0.1295	NA	0.1295	NA	0.1261	NA	NA	NA	4.00	2.00
Br^-, mg/L	0.1226	NA	0.1155	NA	0.1165	NA	NA	NA		
NO_3^-, mg/L	0.4097	NA	0.4708	NA	0.4550	NA	NA	NA	10	
Na^+, mg/L	283.96	223.75	275.99	223.51	270.21	223.13	217.58	1136.78		
Na^+, mg/L	274.22	NA	270.85	NA	265.69			1102.43		
avg Na^+, mg/L	279.09	223.75	275.42	223.51	267.95	223.13	217.58	1119.60		
K^+, mg/L	3.0496	2.6335	2.6876	3.0012	2.6389	2.7569	2.6904	3.9990		
K^+, mg/L	2.9618	NA	2.7221	NA	2.6400			4.1442		
avg K^+, mg/L	3.0057	2.6335	2.6948	3.0012	2.6295	2.7569	2.6904	4.0716		
Ca^{2+}, mg/L	105.98	86.08	101.33	84.75	101.22	86.13	80.48	95.18		
Ca^{2+}, mg/L	100.58		101.12	NA	98.07			86.98		
avg Ca^{2+}, mg/L	103.28	86.08	101.22	84.75	99.65	86.13	80.48	90.08		
Mg^{2+}, mg/L	55.99	45.06	55.31	45.51	54.56	44.98	44.76	58.36		
Mg^{2+}, mg/L	50.52	NA	51.52	NA	50.62			53.75		
avg Mg^{2+}, mg/L	53.26	45.06	53.42	45.51	52.59	44.98	44.76	56.06		
Sr^{2+}, mg/L	1.6875	1.3845	1.6373	1.3434	1.6527	1.3400	1.2896	1.0831		
Sr^{2+}, mg/L	1.6949	NA	1.69	NA	1.6563			1.0752		
avg Sr^{2+}, mg/L	1.6912	1.3845	1.6645	1.3434	1.6545	1.3400	1.2896	1.0792		
Fe^{2+}, mg/L	3.7065	3.5233	0.1751	1.1252	0.7544	1.1814	1.9230	2.7300		
Fe^{3+}, mg/L	3.9034	NA	0.8273	NA	0.5326	NA	NA	1.4960		
avg Fe, mg/L	3.8014	3.5233	0.5012	1.1252	0.6335	1.1814	1.9230	2.1130		0.30
Mn^{2+}, mg/L	0.2356	0.2321	0.0001	0.0004	0.0264	0.0205	0.1584	0.1610		
Mn^{2+}, mg/L	0.2211	NA	0.0206	NA	0.0177	NA	NA	0.1371		
avg Mn, mg/L	0.2284	0.2321	0.0203	0.0004	0.0221	0.0205	0.1584	0.1490		0.05
Zn^{2+}, mg/L	0.5671	0.8629	0.0517	0.0054	0.0542	0.1299	4.2102	0.6671		
Zn^{2+}, mg/L	0.4370	NA	0.0427	NA	0.0287	NA	NA	0.5778		
avg Zn^{2+}, mg/L	0.4971	0.8629	0.0472	0.0054	0.0415	0.1299	4.2102	0.6225		5.00
Fe^{2+}, mg/L	0.0215	0.7512	0.0198	0.9811	0.0202	1.1955	0.0329	0.0451		
Fe^{3+}, mg/L	0.0169	NA	0.0223	NA	0.0168	NA	NA	0.0417		
avg Fe^{2+}, mg/L	0.0192	0.7512	0.0210	0.9811	0.0185	1.1955	0.0329	0.0434	2.00	
Al^{3+}, mg/L	0.4483	1.4441	0.0203	1.9145	0.0966	2.2041	1.5313	0.5153		
Al^{3+}, mg/L	BMDL	NA	BMDL	NA	BMDL	NA	NA	0.0771		
avg Al^{3+}, mg/L	0.4483	1.4441	0.0203	1.9145	0.0966	2.2041	1.5313	0.2963		0.20
U, mg/L	0.0008	0.0047	0.0011	0.0025	0.0029	0.0024	0.0027	0.0013		
avg U, mg/L	0.0008	0.0047	0.0011	0.0025	0.0029	0.0024	0.0027	0.0013	0.030	
Si, mg/L	5.9862	3.6210	4.9109	3.6469	5.4183	3.4678	3.2206	3.7859		
Si, mg/L	4.5571	NA	5.74	NA	5.1197	NA	NA	3.8894		
avg Si, mg/L	5.1966	3.6210	5.3105	3.6469	5.2605	3.4678	3.2206	3.8377		
As, mg/L	0.0028	0.0012	0.0018	0.0014	0.0042	0.0018	0.0017	0.0075	0.010	
Se, mg/L	0.0290	0.0009	0.0027	0.0010	0.0048	0.0024	0.0040	0.0040	0.050	
Pb, mg/L	0.0074	0.0044	BMDL	0.0037	0.0024	0.0037	0.0029	0.0042		
V, mg/L	BMDL	0.0005	BMDL	0.0018	BMDL	0.0174	0.0114	BMDL		
Be, mg/L	BMDL	BMDL	BMDL	BMDL	BMDL	BMDL	BMDL	BMDL	0.004	
B, mg/L	0.1006	NA	0.1018	NA	0.0970	NA	NA	0.1089		
Tl, mg/L	0.0001	0.4541	0.0072	0.5718	0.0072	0.6495	0.0208	0.0002		
Cr, mg/L	0.0045	0.0056	BMDL	0.0002	0.0015	0.0071	0.0054	0.0071	0.10	
Co, mg/L	0.0026	BMDL	0.0023	BMDL	0.0021	BMDL	BMDL	0.0023		
Ni, mg/L	0.0063	0.0133	0.0048	0.0133	0.0052	0.0110	0.0059	0.0062		
Cu, mg/L	0.0247	0.0022	0.0019	0.0147	0.0090	0.0062	0.0136	0.0102		1.00
Mo, mg/L	0.0014	0.0047	0.0018	0.0019	0.0017	0.0050	0.0047	BMDL		
Ag, mg/L	BMDL	BMDL	BMDL	BMDL	BMDL	BMDL	BMDL	BMDL		0.10
Cd, mg/L	BMDL	BMDL	BMDL	BMDL	BMDL	BMDL	BMDL	BMDL	0.005	
Sb, mg/L	BMDL	BMDL	BMDL	BMDL	BMDL	BMDL	BMDL	BMDL		
Hg, mg/L	BMDL	BMDL	BMDL	BMDL	BMDL	BMDL	BMDL	BMDL	0.006	
Tl, mg/L	BMDL	BMDL	BMDL	BMDL	BMDL	BMDL	BMDL	BMDL	2000	

BMDL	Below minimum detection level
NA	Not analyzed
MCL	drinking water primary maximum contaminant level
SMCL	drinking water secondary maximum contaminant level

37

5T-529 Particulate and Dissolved/Colloidal Water Quality. Beyond its elevated salinity (~ 1330 mg/L total dissolved solids), the extended water quality sampling did not reveal any water characteristic that would preclude the well from being a good candidate for development to increase its production for both livestock and potentially human drinking water. Dissolved iron and manganese levels are sufficiently high that aeration followed by particle removal (e.g., filtration, sedimentation) would be advised particularly if a membrane process were implemented for water treatment, but this could be potentially accomplished with cartridge filters – adding little additional complexity or cost to a treatment process. (This option bears further investigation if a treatment system is to be implemented.) The unfiltered samples showed slightly elevated barium, iron, aluminum and arsenic concentrations relative to the dissolved samples. As noted above this is not a concern from a water use perspective. It does indicate that fine particles of barium (probably as barium sulfate based on the high dissolved sulfate concentration), iron (probably as ferric hydroxide based on the high ORP and dissolved oxygen concentration), and aluminum (probably as colloidal aluminum silicates – clays) are entrained in the groundwater and should be removed by settling and/or filtration. This would happen naturally in a large storage tank or could be engineered through a tailored unit operation. The arsenic found in the particulate fraction is likely associated with ferric hydroxide colloids with which it strongly associates. It is noticeable that the arsenic in the dissolved phase is well below the drinking water maximum contaminant level and does not seem to pose an impediment to increased water use.

5T-537 Water Quality. As noted previously, the 5T-537 sample was taken from the storage tank outlet rather than from freshly pumped groundwater as the windmill pump was not operating when the sampling occurred. Consequently, little weight should be placed on measured parameters readily affected by storage or exposure to an open atmosphere and sunlight, such as pH, alkalinity, temperature, dissolved oxygen and ORP. That said, the primary water quality constituent differentiating 5T-537 water from that of 5T-529 is the salinity. 5T-537 water is slightly more than 3-times more saline. This is largely due to an increased NaCl load, rather than an across the board increase in all ionic constituents, as the major polyvalent cations, calcium and magnesium, are only slightly elevated in 5T-537 (relative to 5T-529), whereas the sodium concentration is more than four-fold higher. Other than the increased salinity, there is no water quality parameter that was measured in the 5T-537 that would preclude it from use as a livestock or potable water source.

Attachment B – Site Assessment Report

Well Assessment for Navajo Nation - Leupp Chapter Stockwell 05T-529

Summary of Downhole Video Survey and Pumping August 15-18, 2011

Video Logging

A video survey was conducted for well 05T-529 beginning at 2:30 p.m. on August 15, 2011. The video camera lens (depth) was zeroed out at ground level, a centralizer installed and the survey was recorded to high definition DVD. The steel well casing is 6-5/8-inch diameter. The sucker rod had been removed the previous week and the well brushed and cleaned by the Navajo Nation Leupp pump crew on August 11-12. This only left the weekend for the water column to clear up.

The steel casing appeared to be in good condition and clean for most of its length, especially the first 300 feet, which is documented in Title 1 (19:49 minutes duration). Some minor pitting was observed below about 100 feet. Welded casing joints were encountered about every 20-21 feet at approximate depths of 17, 37, 59, 80, 102, 123, 145, 166, 185, 210, 227, 249, 269, and 290 feet. The recording continued as Title 2 (42:53) from 300 to 483 feet where the camera apparently bottomed out on sediment (the well is reported to be 500-foot deep from the Navajo Well database). Welded joints continued at about 312 feet and at 333 feet were some patchy rust spots.

The camera encountered the static water level at 326.5 feet and once below water, visibility via the down view lens was poor to non-existent. The remaining survey used the side view lens to observe the casing wall, joints and slotted features. At approximately 358 feet, began picking up noticeable encrustation (coating or plating) of calcium carbonate deposits. The first feature, which initially was thought to be the top of a wire wrapped well screen, was subsequently interpreted to be exposed casing threads, as any well screen would be expected to continue for many feet (there are no known well screen or slotting records for this well). Several more intervals were seen of these casing threads, at 393.5, 415.1, 457.1, and 478.4 feet. Each interval was estimated to be about 0.1-0.2 feet thick. Often seen were "windows" through the coatings to clean casing steel and brush or scratch marks through the coatings, presumably from the Navajo crew's brushing efforts and/or from when the submersible pump/flex hose dropped to the well bottom in the November 2010 work.

The first possible perforation feature (vertical torch cut slot) seen was at about 397.9 feet and the bottom of the slot at about 399.5 feet. It is interpreted the casing had been torch cut slotted in the lower 100 feet (about 400-500) of the steel well casing during installation in 1974. The next slot observed was about 405 to 407 feet. Other thin slots were recorded at about 428-429.5 feet, 431.9-432.6 feet, 440.5-441.0 feet and 441.4-441.6 feet. The slots are undulating.

The slots appear to have been torched randomly (random intervals) along the casing as the casing sections were welded, with some as pairs on opposite sides (180 degrees) of the casing, but others on only one side. This was not consistent and no orderly slot groups or arrays seem to be present as would normally be expected. An example of a group might be four 2 foot-long slots cut longitudinally each 90 degrees around the casing, in depth increments of 5 to 10 feet. The 05T-529 slots had varying degrees of clogging or tuberculation, of what is expected to be calcium carbonate and other insoluble salts (e.g. chlorides) healing much of the slot open area. The plugged to open slot percentage was estimated at about 60:40. The camera stopped at about 483 feet on sediment and the survey was completed at 5:15 p.m.

<u>Pumping</u>

On Tuesday August 16, 2011 at about 8:00 a.m., the static water level was measured from the top of the 6-5/8-inch steel casing at 324.76 feet (323.5 feet below ground level). The 4-inch Grundfos 40S75-25 submersible pump was attached to the lowermost section of riser pipe and the 10/4 electrical cable spliced to the motor leads using crimps and heat shrink tubing kits. Thirty-nine additional sections of 10.5-foot long threaded and coupled 2-inch diameter galvanized steel riser pipe were assembled and lowered into the well by the Navajo Nation Leupp Chapter pump crew foreman Harvey Riggs and his two helpers. The pump intake is set about 406 feet deep. A by-pass valve and hose was attached to the riser pipe at the top of the wellhead, and at 12:33 p.m. the pump was activated using a rented 34 Kw three-phase Multiquip generator through the three-phase electrical control panel.

The discharge water cleared rapidly which was directed into the charco. Two bucket tests determined the discharge as 5.71 and 5.83 seconds per 5 gallons or about 53 gpm. At 1:15 p.m. a water level sounder measurement showed the pumping level at about 370 feet below top of casing, or about 45 feet of drawdown. By 1:30 p.m. the discharge had dropped off to about one-half the initial rate, likely more representative of aquifer storage rather than casing storage. At this time a 2-inch Neptune totalizing meter was attached to the discharge line to begin filling the 24,000 gallon storage tank. The starting meter reading was 8363700 gallons. By 1:55 p.m. the pump rate was 27-28 gpm according to the meter. A bucket test at 3:24 p.m. was 9.61 sec/5 gal or

31.2 gpm. Temperature of bypass discharge was 66 degrees. Pumping continued until 5:30 p.m. ? and the generator was hauled back to the Leupp Chapter yard for security.

On August 17, 2011 the static water level was measured at 324.77 feet below top of casing (323.5 feet bgl), showing that the aquifer had recovered fully. Pumping began again at 10:33 a.m. after the UA staff repaired one of the water level sounders. A bucket test showed 5.63 sec/5 gal or 53.3 gpm, very similar to the intial discharge rate the previous day. At this time the UA collected water samples from the by-pass discharge hose. At 11:30 a.m. the pumping depth to water was 373.25 feet (48.48 feet of drawdown) at 27-28 gpm, for a specific capacity of 0.58, a fairly low production rate, but representative of many tests in the C-Aquifer. The pump rate remained consistent at 27-28 gpm throughout the day, and at 4:10 p.m. the drawdown had increased to 52.06 feet. The pumping water level at this time was 377.71 feet from TOC or 376.83 feet bgl. Pumping stopped at 5:00 p.m. The storage tank had filled halfway to about the 10,000-11,000 gallon level. The generator was then taken to the Leupp yard for storage.

Pumping continued the next day to continue filling the storage tank. The static water level was measured first thing on August 18, 2011 at 324.94 feet below top of casing (323.7 feet bgl). The well had likely recovered back to static level and the 0.2-foot difference from the previous day is attributed to difficulties in obtaining repeatable water level indicator readings due to variable probe sensitivities. The probe tends to pick up moisture and cascading or dribbling flows from higher levels which are sometimes difficult to separate from the actual water table in the well.

The water meter continued to show 28 gpm discharge rate, and the final pumping water level reading was 379.27 feet below top of casing or 378 feet below ground level at 9:10 a.m. The ending meter reading was 8380200 gallons. At least 16,500 gallons was pumped from the C-Aquifer through the meter. An additional approximately 1800 gallons was pumped to the charco and cattle troughs prior to incorporating the meter, for a total volume of about 18,000 gallons.

The pump and riser pipe including submersible pump cable was left in the well for future stock-tank filling by the Navajo Nation DWR. The three-phase electrical control panel was disconnected from the pump cable and generator, placed in its box and wrapped with a plastic garbage bag. It was placed into the 4-foot CMP culvert to try and keep it out of sight for upcoming installation by the NNDWR Leupp pump crew. This is government equipment.

8/23/11