Laboratory research relating to large woody design

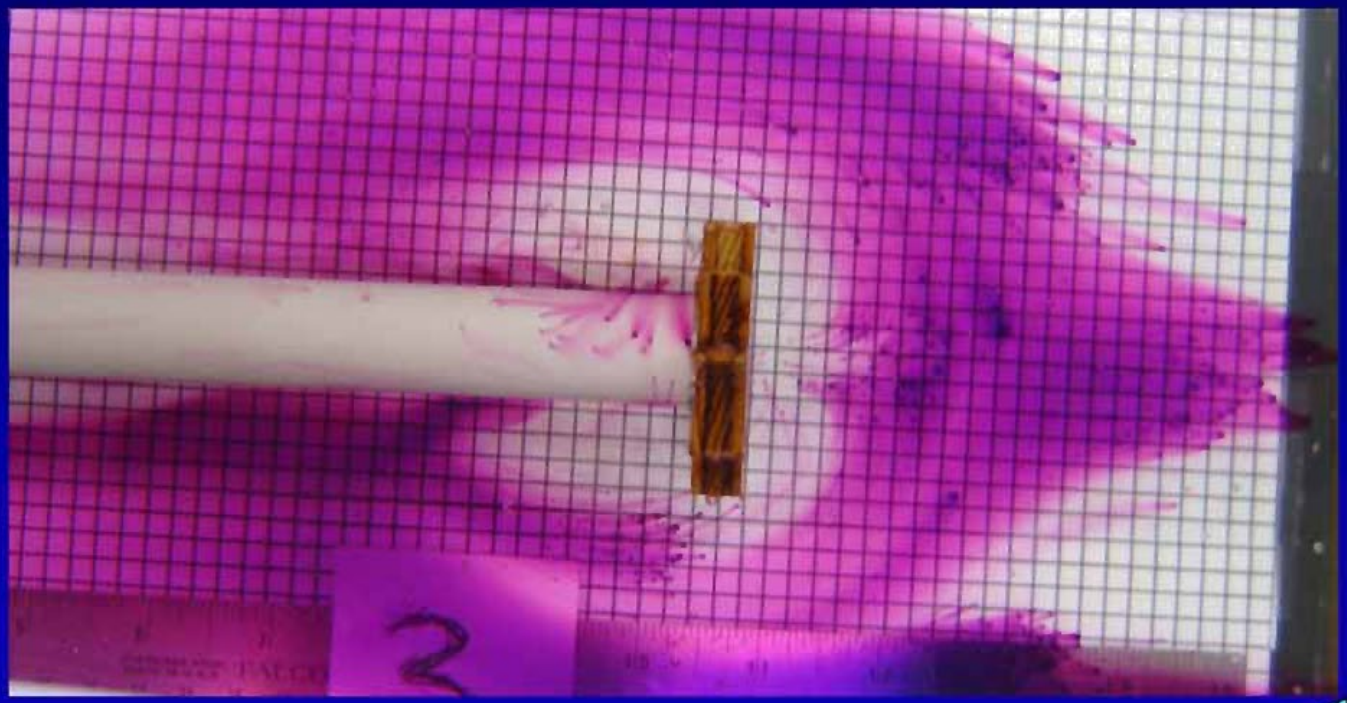

flow

Vivian Leung
University of Washington

Designing with large woody debris

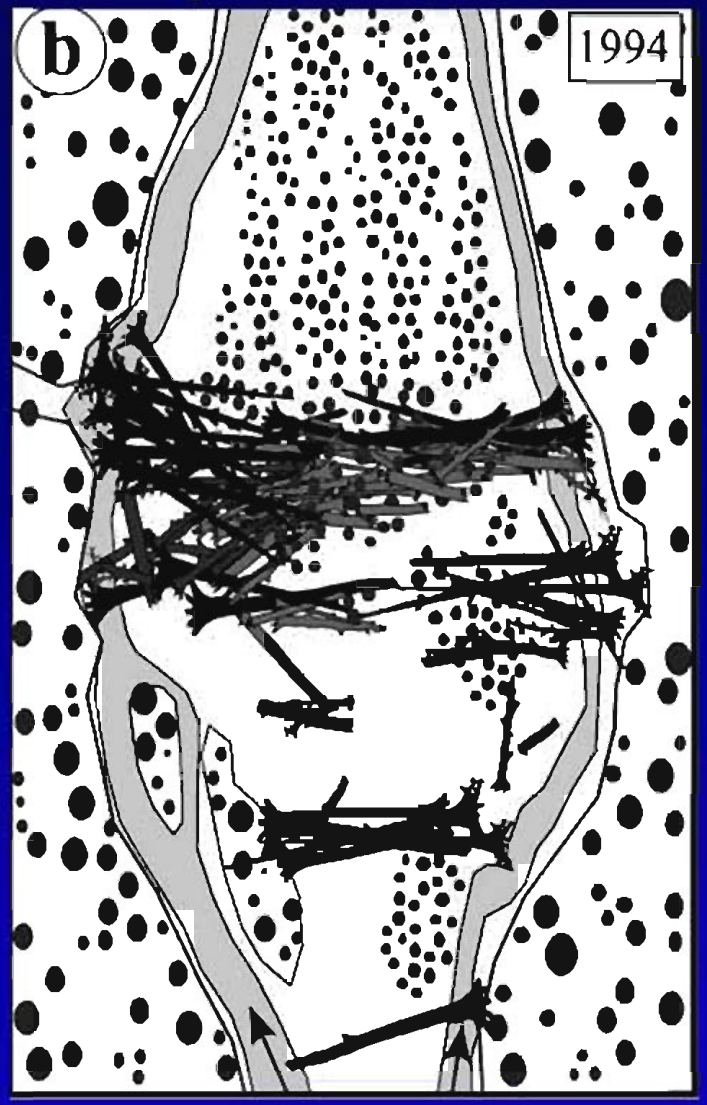

Abbe, T. B., and Montgomery, D. R 2003

Laboratory experiments

- model of physical processes
- controllable experiment
- compressed time and space

Transport & Deposition of Wood

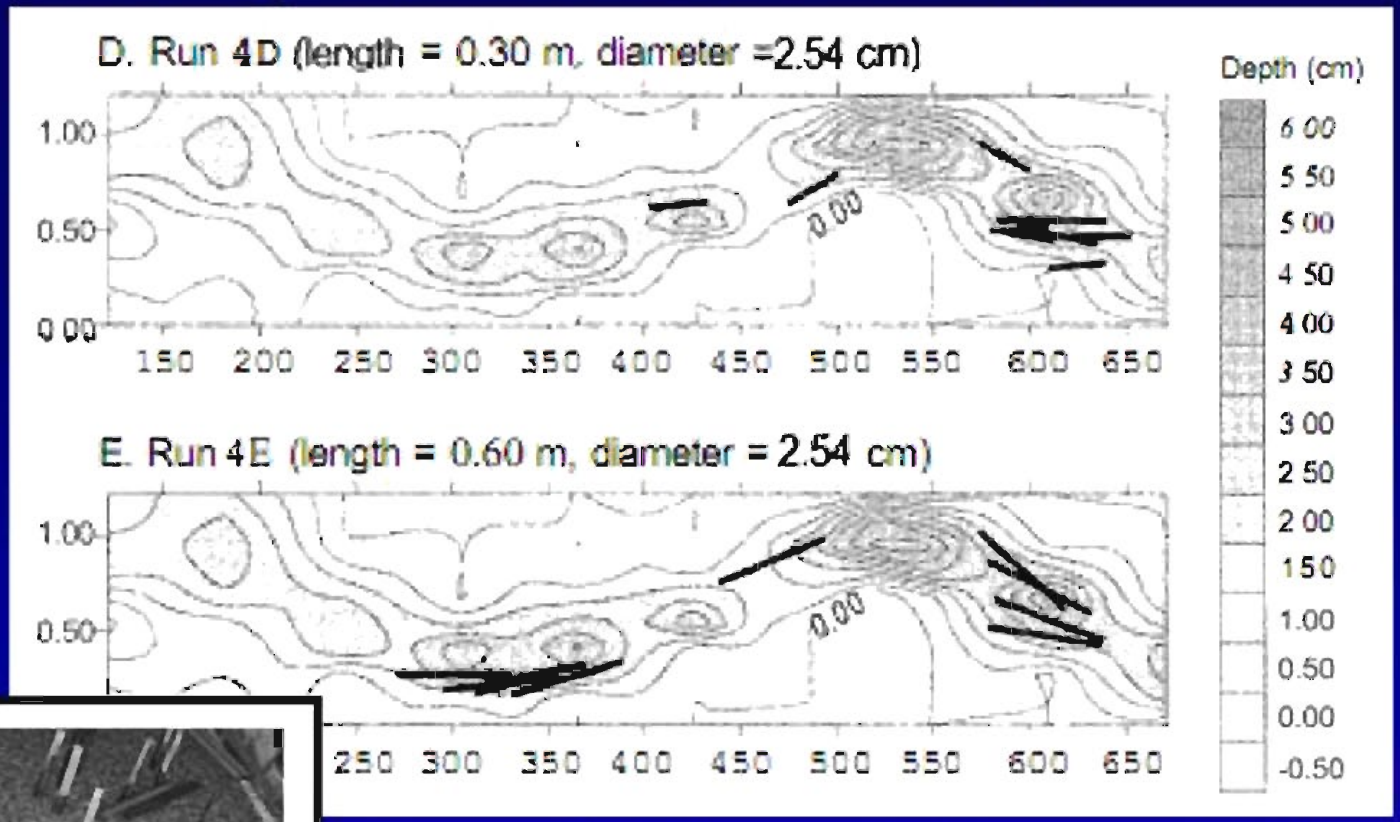

Braudrick and Grant, 2001

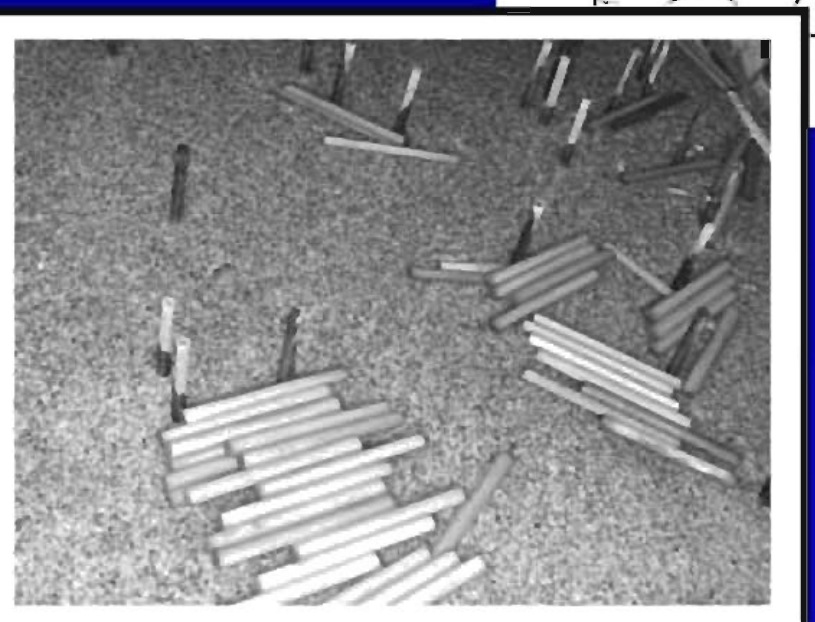

Bocchiola et al. 2008

Flow resistance and drag

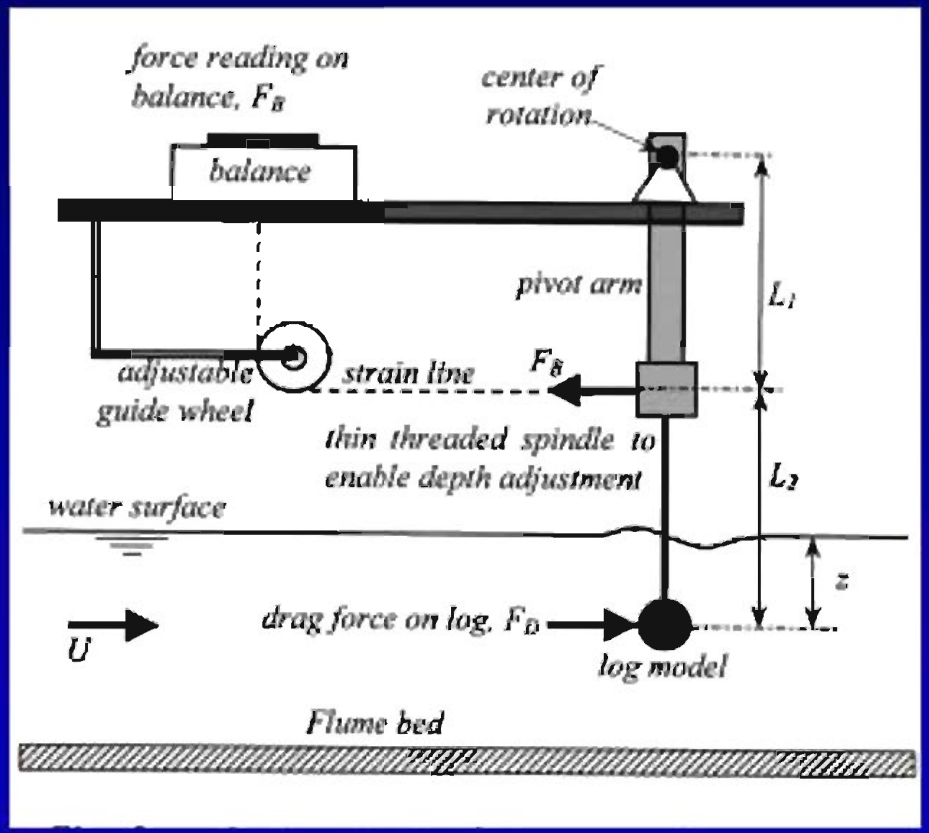

Wallerstein et al. 2002

Wilcox and Wohl, 2006

Streambed topography around logjams

McBride and Thompson

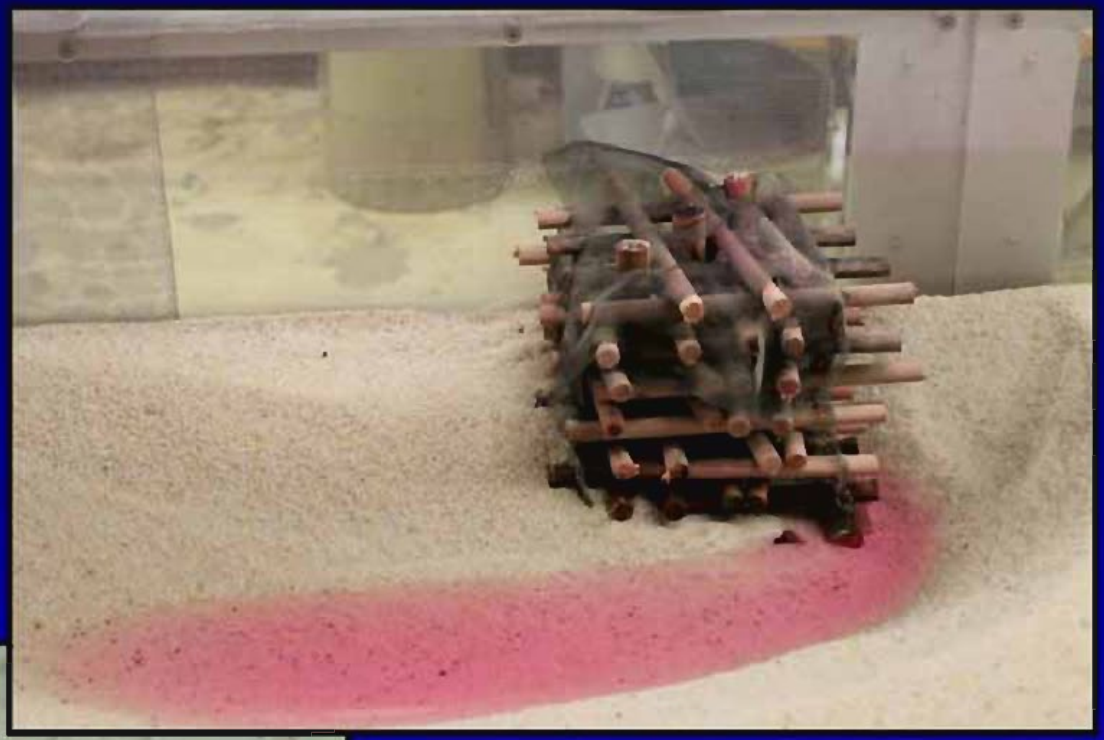

Skalak and Pizzuto

Individual logs

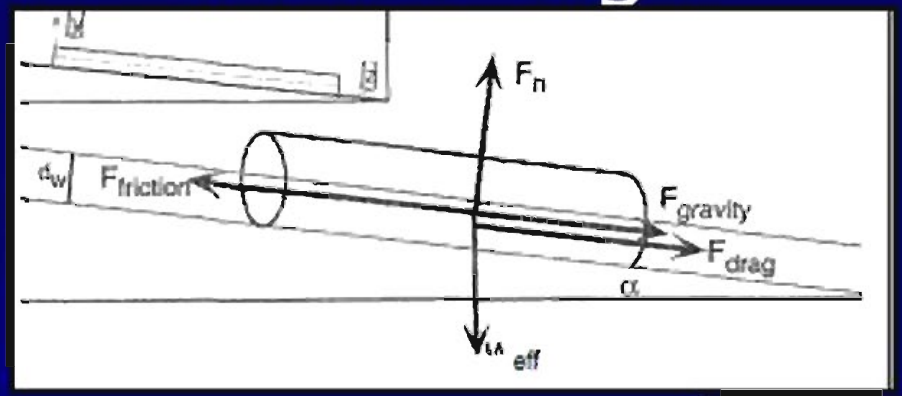

Braudrick and Grant, 2000

Sawyer, Cardenas and Buttles, 2012

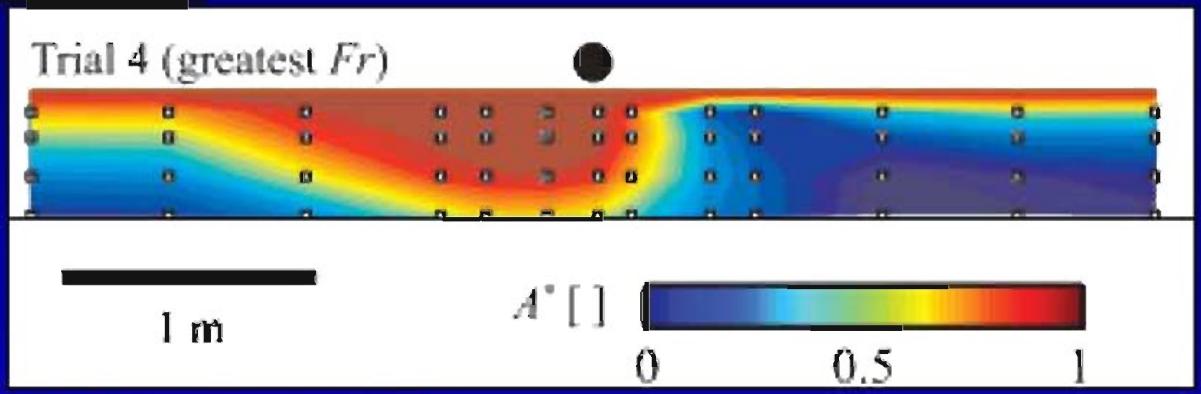

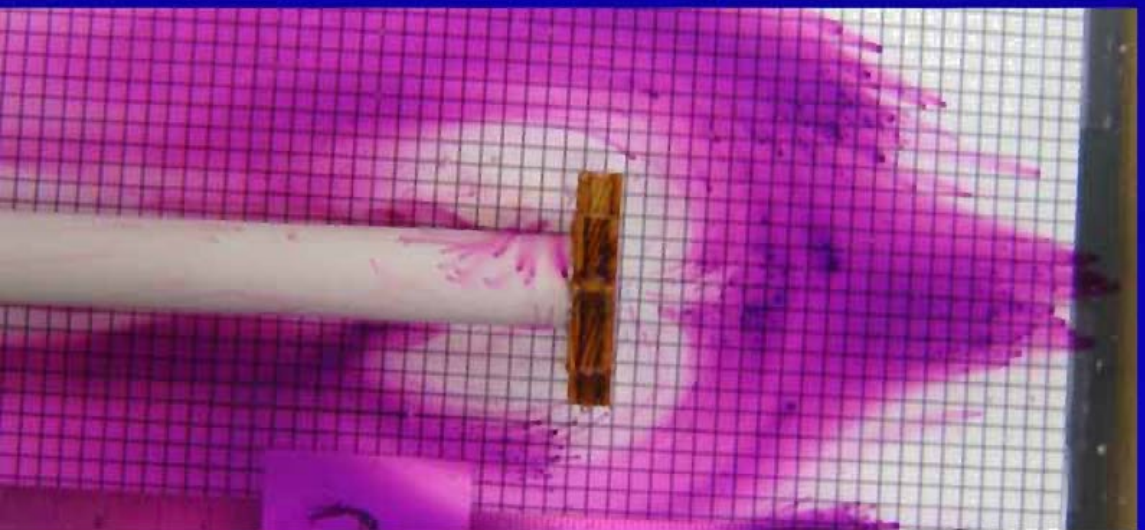

Leung and Montgomery

My research

How woody debris affects:

- fluid flow
- streambed morphology

How does wood shape, size and orientation affect fluid flow and streambed morphology?

Flume Setup

Stationary tree, immobile bed, no bank interactions

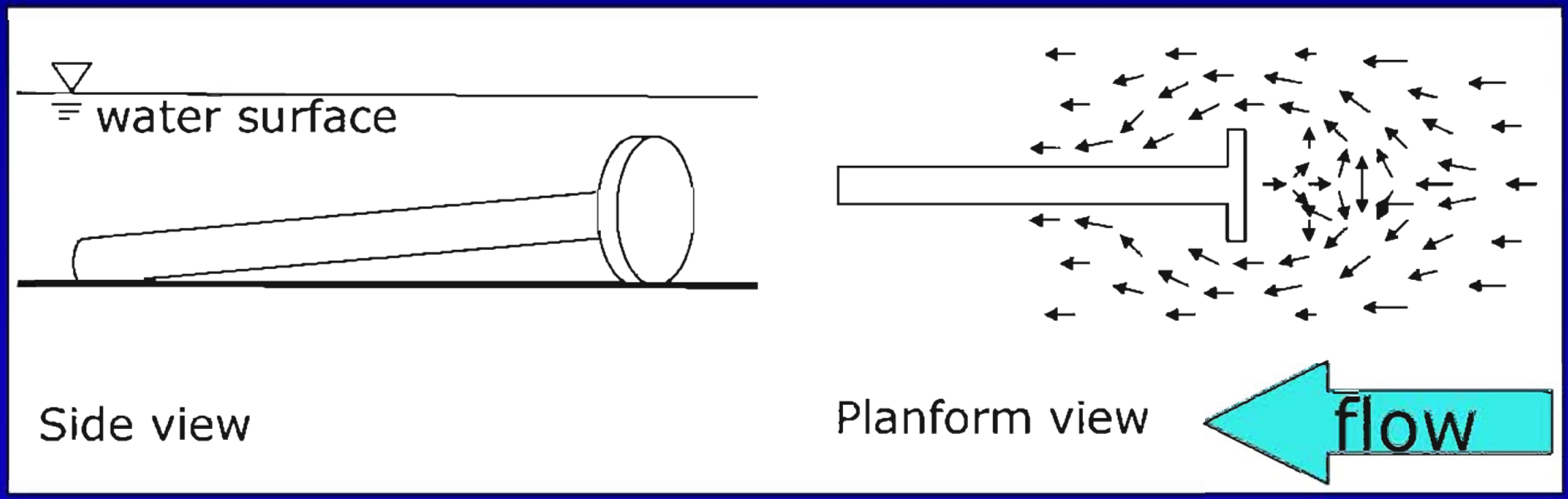

Experiments: Flow Visualization

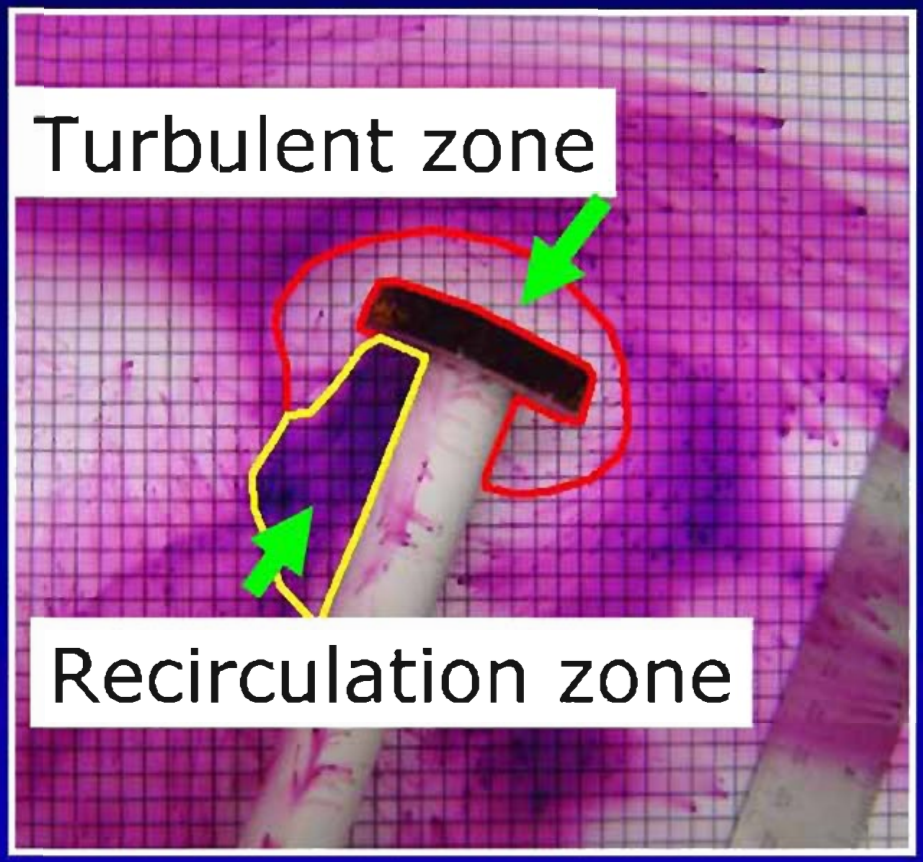

flow

Effects of Root Shape and blockage area

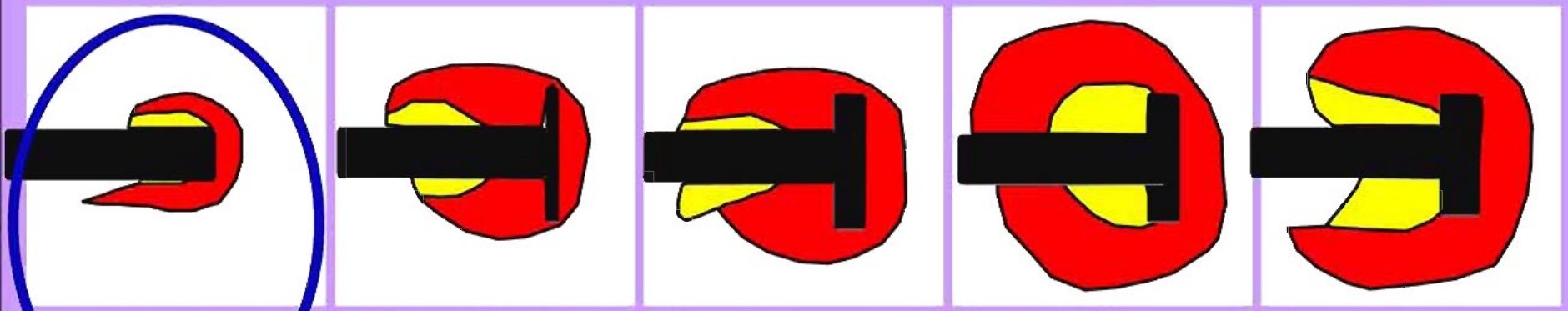

No Roots | Wire Mesh Roots | Star Shaped Roots | Partially Buried Roots | Circular Roots

flow

turbulent zone

recirculation zone

Increasing blockage area

Effects of Tree Orientation

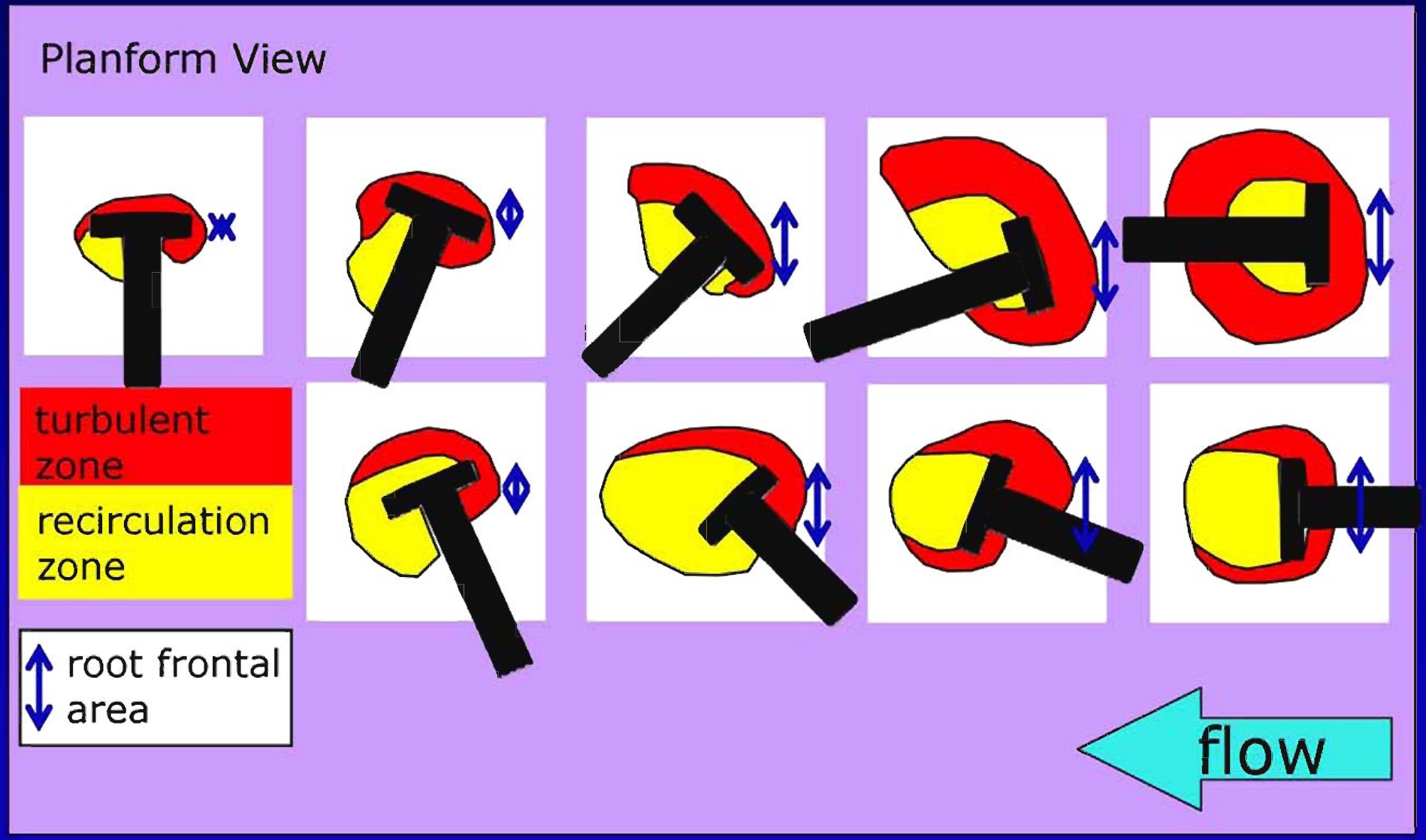

Effects of root frontal area

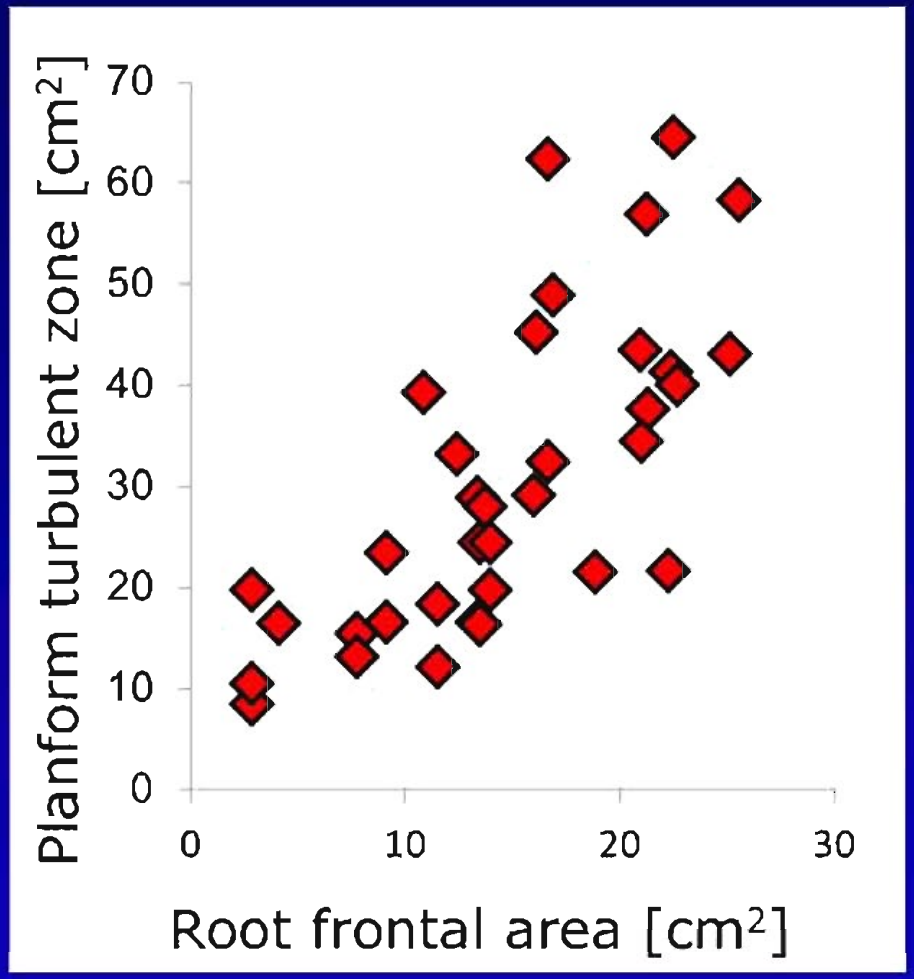

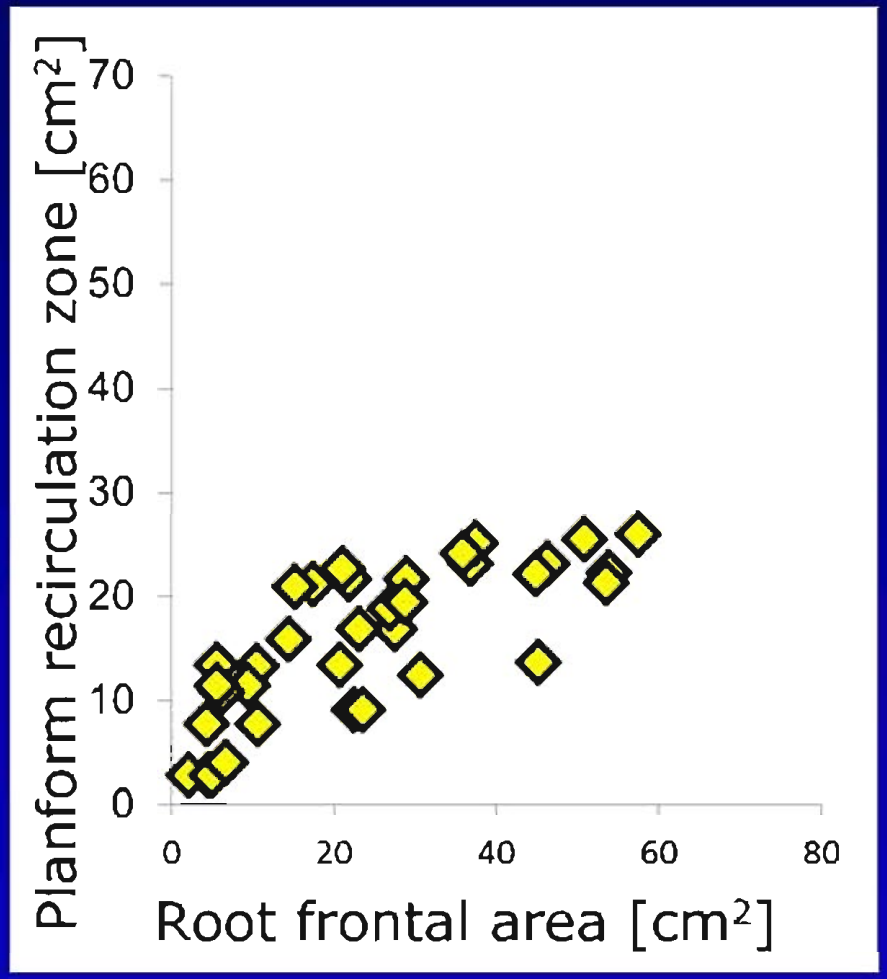

Field vs. Flume

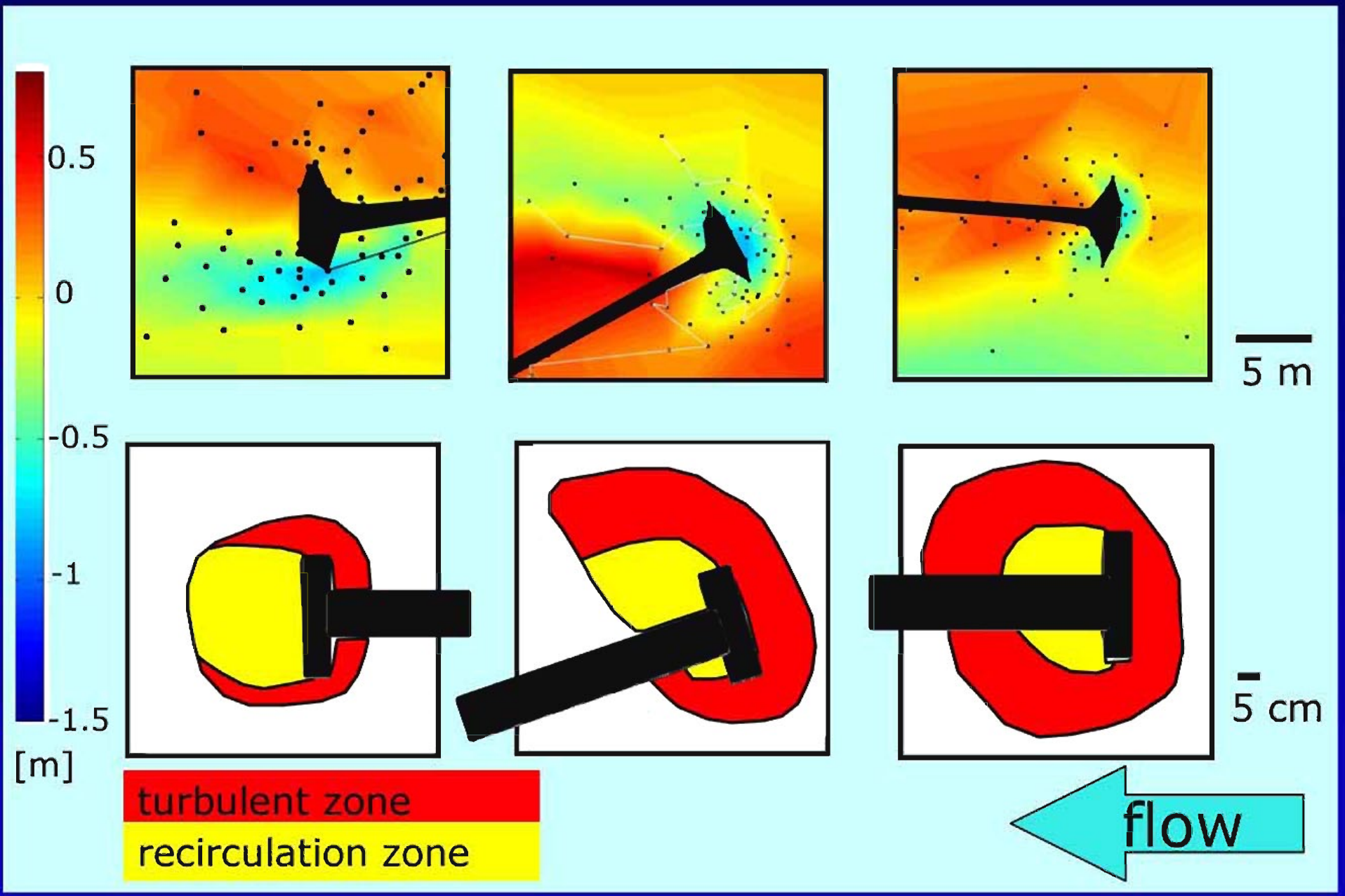

Key findings:

- Roots matter.
- Root frontal area is proportional to turbulent and recirculation zones, and scour.

Future research:

- Sediment & water supply
- Channel form and logjams

This research is supported in part by:

OACIS | OCEAN & COASTAL INTERDISCIPLINARY SCIENCE

GK–12 program bringing marine science into classrooms in Seattle and the San Juan Islands

NSF

NCED Earth · Water · Life

Friday Harbor Laboratories
UNIVERSITY OF WASHINGTON

ARCS® Foundation Inc.

SAFL
St. Anthony Falls Laboratory

ESS Earth and Space Sciences | UNIVERSITY OF WASHINGTON

Quaternary Research Center

NSF

Special thanks to my advisor, Dave Montgomery.

Thanks also to Peter Rhines, Eric Lindahl, Bob Koon, Emily Carrington and Sarah Johnson for experimental support; and Chris Paola and Joel Johnson.