Proposition 50 6a Desalination

Final Report

Pilot Demonstration

"Optimizing Seawater Reverse Osmosis for Affordable Desalination"

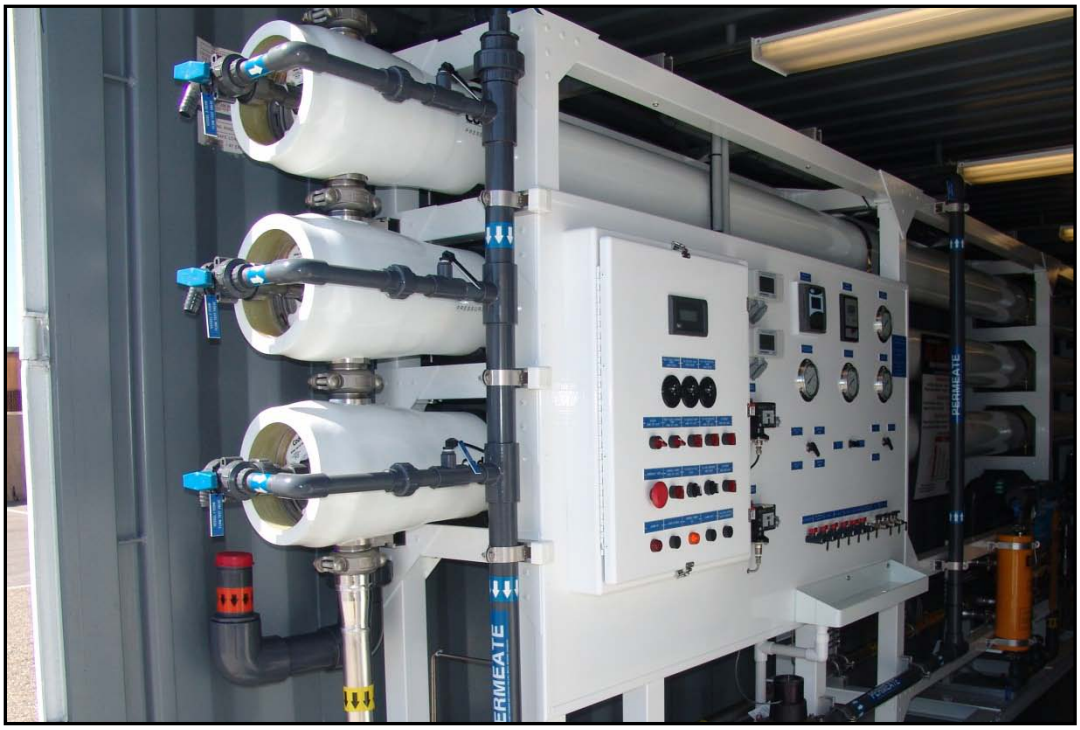

ADC Demonstration Facility at U.S. Navy Seawater Desalination Test site in Port Hueneme, CA

Submitted by

Affordable Desalination Collaboration (ADC)

Principal Contact: John MacHarg,

Tel: 650-283-7976

E-mail: jmacharg@affordabledesalination.com

Affordable Desalination Collaboration, 2419 E. Harbor Blvd, #173, Ventura, CA, 93001
Tel: 805-200-5244 – Fax: 805-200-5212 – www.affordabledesal.com – info@affordabledesal.com

Rev 08-30-12

Table of Contents

1.0 Project Information 2
2.0 Executive Summary 2
3.0 Goals and Objectives of the Project 6
4.0 Technology Background 8
4.1 Pretreatment 8
4.1.1 Multi-Media Filtration 8
4.1.2 GE Zenon ZeeWeed 1000 Ultrafiltration (UF) 10
4.1.3 Amiad Micro Fiber Pre-Filtration 12
4.2 Seawater RO (SWRO) System with Isobaric Energy Recovery 13
4.3 Pressure Exchanger (PX) Isobaric Energy Recovery 14
4.4 Balanced and Unbalanced Flow Schemes 16
5.0 Project Implementation 18
5.1 ADC Demonstration System and Design Criteria 19
5.2 Demonstration Test Approach 23
5.3 Net Present Value (NPV) Cost Analysis 23
6.0 Results and Discussion 26
6.1 Raw Water Characterization 27
6.2 Pretreatment System Performance 29
6.2.1 Multimedia Filter Performance 29
6.2.2 GE Zenon ZeeWeed 1000 30
6.2.3 Amiad Automatic Micro Fiber (AMF) Pre-filtration 32
6.3 Low Energy Membranes and Staged Membrane 33
6.3.1 Membrane Performance 33
6.3.2 Energy Consumption 41
6.3.3 Cost and Most Affordable Point (MAP) Analysis 45
6.4 Innovative Flow Regime for High Recovery 49
6.4.1 Membrane Performance 49
6.4.2 Energy Consumption 52
6.4.3 Cost and Most Affordable Point (MAP) Analysis 55
6.4.4 Longer Term Testing 58
7.0 Conclusions 59
8.0 Project Deliverables 60
9.0 Dissemination/ Outreach Activities 61
10.0 Final Financial Statement 62
11.0 Publications 64

12.0 Test Protocol 65
13.0 Data 66
14.0 Quarterly Reports 67

List of Tables

Table 3.1 ADC I Most Affordable Point Results 6
Table 3.2 ADC II Potable Water Quality Goals 8
Table 4.1 Design parameters for ADC II Multi-Media Filtration 9
Table 4.2 Design parameters for ADC II ZeeWeed 1000 UF System.....10
Table 4.3 Design parameters for ADC II AMF Prefiltration System 12
Table 5.1 Total Project Tasks ADC II Proposition 50 Project 18
Table 5.2 ADC Project Timeline.....19
Table 5.3 Design Criteria for ADC's SWRO Demonstration Scale Equipment 22
Table 5.4 NPV Model Assumptions for 50 MGD SWRO Plant 24
Table 5.5 Estimated RO membrane life. 25
Table 5.6 ADC energy consumption at MAP and projected energy consumption at larger plant capacities. 26
Table 6.1 SWRO Raw water quality during ADC I and II testing 27
Table 6.2 Multi-point testing comparison at 7.5 gfd for balanced and unbalanced flow regimes.....52
Table 8.1 List of Deliverables – Quarterly Reports.....60
Table 9.1 List of Presentations and Publications 61
Table 10.1 Breakdown of Project Costs 63

List of Figures

Figure 2.1 ADC Demonstrates SWRO Is Competitive with Other Water Supply Options in Southern California 3
Figure 4.1 Multimedia Filters at the ADC Test Site..... 9
Figure 4.2 GE ZeeWeed® 1000 system at the test site. 11
Figure 4.3 AMF Filter System at the test site 13
Figure 4.4 Optimized SWRO system design. 13
Figure 4.5 PX internal flow path. 15
Figure 4.6 Balanced flow, over and under-flushing versus PX mixing (ERI Doc No. 80088-01). 17
Figure 5.1 ADC Demonstration Plant Site Layout. 20
Figure 5.2 Process Flow Schematic.....21
Figure 6.1 Raw water intake at Port Hueneme.....27
Figure 6.2 Raw (sea) water feed salinity and boron concentration 28
Figure 6.3 Sea Water Temperature 28
Figure 6.4 Multi-media filter performance: Raw Water turbidity, filtrate turbidity and SDI 29
Figure 6.5 GE Zenon ZeeWeed 1000 UF Performance: Filtrate turbidity and SDI 30
Figure 6.6 GE Zenon ZeeWeed 1000 UF Performance: Normalized flux and Transmembrane Pressure (TMP). 31

Figure 6.7 Amiad AMF Performance: Filtrate Turbidty and SDI.....32
Figure 6.8 Amiad AMF Performance: Inlet/Outlet Pressures and Pressure Differential.....33
Figure 6.9 Low Energy Membrane Performance at Various Recoveries: Permeate TDS at 6 gfd 35
Figure 6.10 Low Energy Membrane Performance at Various Recoveries: Permeate TDS at 7.5 gfd.....36
Figure 6.11 Low Energy Membrane Performance at Various Recoveries: Permeate TDS at 9 gfd.....37
Figure 6.12 Low Energy Membrane Performance at Various Recoveries: Permeate Boron at 6 gfd.....38
Figure 6.13 Low Energy Membrane Performance at Various Recoveries: Permeate Boron at 7.5 gfd.....39
Figure 6.14 Low Energy Membrane Performance at Various Recoveries: Permeate Boron at 9 gfd.....40
Figure 6.15 Energy consumption for the low energy membranes across various RO recoveries at 6 gfd.....42
Figure 6.16 Energy consumption for the low energy membranes across various RO recoveries at 7.5 gfd.....43
Figure 6.17 Energy consumption for the low energy membranes across various RO recoveries at 9 gfd.....44
Figure 6.18 50 MGD SWRO Facility Costs at 6 gfd for various RO recoveries.....46
Figure 6.19 Projected 50 MGD SWRO Facility Costs at 7.5 gfd for various RO recoveries .47
Figure 6.20 Projected 50 MGD SWRO Facility Costs at 9 gfd for various RO recoveries 48
Figure 6.21 Unbalanced Flow Regime High Recovery Testing: Permeate TDS and Boron Concentrations at 7.5 gfd (Membrane: Hydranautics SWC5).....50
Figure 6.22 Unbalanced Flow Regime High Recovery Testing: Permeate TDS and Boron Concentrations at 9 gfd (Membrane: Hydranautics SWC5) 51
Figure 6.23 RO and Total Specific Energy for unbalanced flow regime high recovery tests at 7.5 gfd.....53
Figure 6.24 RO and Total Specific Energy for unbalanced flow regime high recovery tests at 9 gfd.....54
Figure 6.25 Projected 50 MGD SWRO Facility Costs at 7.5 gfd for various system recoveries 56
Figure 6.26 Projected 50 MGD SWRO Facility Costs at 9 gfd for various system recoveries 57
Figure 6.27 Unbalanced Flow Regime, High Recovery Test for 60/45 recovery at 7.5 gfd ..58

List of Acronyms

AF	acre-foot
ADC	Affordable Desalination Collaboration
gfd	gallon per feet per day
HP	High pressure
kgal	Kilo-gallon
kWh	Kilowatt-hour
m^3	cubic meters
$L/m^2/d$	liters per square meter per day
LP	Low pressure
MAP	Most affordable point
mg/L	milligrams per liter
mgd	million gallons per day
NDP	Net driving pressure

NPV	Net present value
NTU	Nephelometric turbidity unit
O&M	Operations and maintenance
psig	Pound-force per square inch gauge
PX	Pressure exchanger
RO	Reverse osmosis
SDI	Silt density index
SWRO	Seawater reverse osmosis
TDH	Total dynamic head
TDS	Total dissolved solids
TMP	Transmembrane pressure
UF	Ultrafiltration
VFD	Variable frequency drive

1.0 Project Information

Project Type: Proposition 50 State Grant

Project Title: Optimizing Seawater Reverse Osmosis for Affordable Desalination

Start Date: 4-2-2007

End Dates: 6-30-2010

Grantee Information: Affordable Desalination Collaboration (ADC), 2419 E. Harbor Blvd. #173, Ventura, CA, 93001, Tel: 850-200-5244, Fax: 805-200-5212, e-mail: jmacharg@affordabledesal.com, www.affordabledesal.com

Contact Person Information: John MacHarg, Managing Director

Grant Awarded: 4/2/2007

Total Cost of the Project: $2,085,420

Proposition 50 State Share: $920,937

2.0 Executive Summary

A key challenge facing the seawater desalination industry today is to develop a new generation of reverse osmosis (RO) plants that deliver high quality fresh water at a reduced economic and environmental cost. The key to achieving these goals is to address the most expensive and environmentally taxing component of operating a desalination system: energy. There have been major advances in seawater desalination over the past ten years that include isobaric energy recovery systems, improved pumping technologies, and low energy membranes. The Affordable Desalination Collaboration (ADC) has taken advantage of and optimized all these advancements in one scalable pilot system. Some of the advanced features of the ADC seawater reverse osmosis (SWRO) system include isobaric energy recovery, an efficient main high-pressure pump, and low energy SWRO membranes.

The ADC is a California non-profit organization composed of leading government agencies, municipalities, RO manufacturers, consultants and professionals collaborating together to help reduce the costs associated with desalination. In the first phase of the study (ADC I), a demonstration plant was built and operated at the United States Navy's Seawater Desalination Test Facility in Pt. Hueneme, California. The plant utilized a combination of proven technologies developed primarily in the U.S. and California to demonstrate that seawater desalination could be optimized to make it technically and economically viable. Using a combination of energy efficient, commercially available RO technologies including pumps, DOW Filmtec membranes and energy recovery equipment, ADC I had achieved remarkable results by desalinating seawater at energy levels between 6.0-6.9 kWh/kgal (1960-2250 kWh/acre-ft).

The ADC's demonstration scale seawater reverse osmosis treatment plant uses an isobaric energy recovery technology (Pressure Exchanger (PX)) and has a one-pass RO array consisting of three 7-element 8" diameter pressure vessels in parallel. On average, these numbers make the power for desalination comparable to the power required for the State Water and the Colorado River Aqueduct projects and they are approximately 35% lower than experts had been projecting for seawater desalination. For the approximate 100 mgd of proposed seawater desalination projects in Southern California alone, this 35% savings would equate to approximately 140,000 Mega Watt hours in energy savings per year.

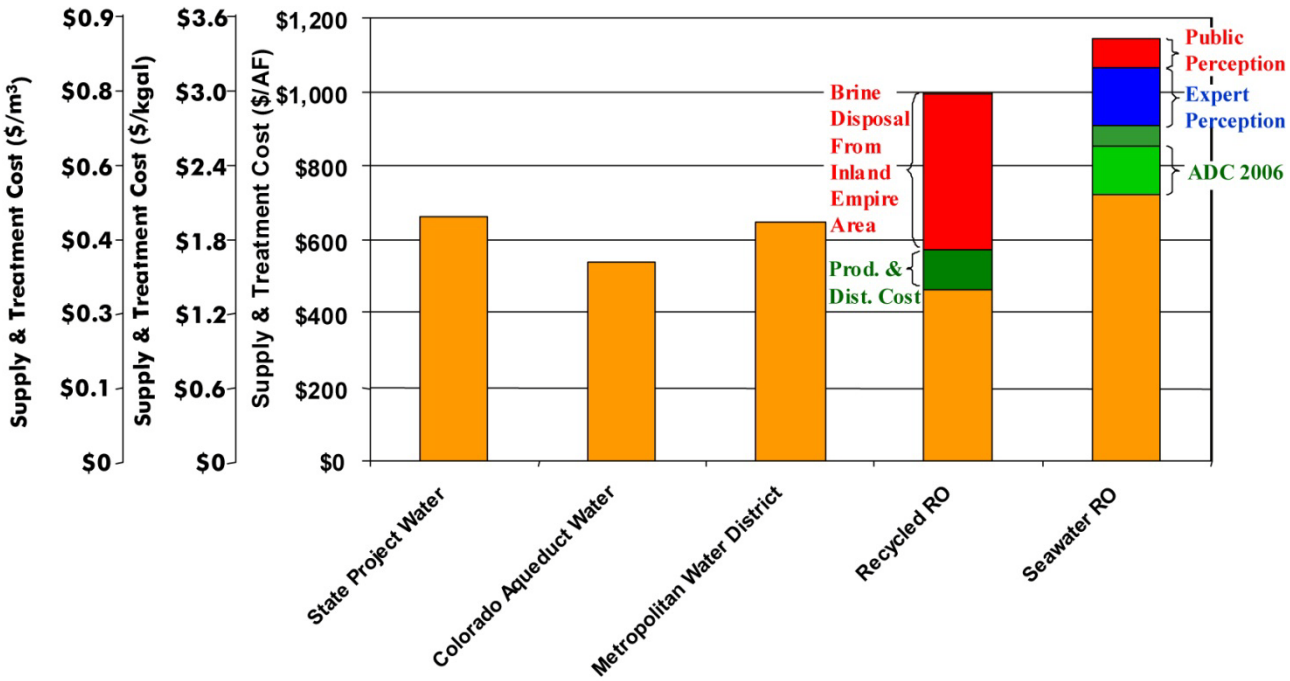

Figure 2.1 ADC Demonstrates SWRO Is Competitive with Other Water Supply Options in Southern California

From the ADC I study, it was recommended that additional studies should be conducted to include further research into feed water pretreatment options for the SWRO process, expand the membrane testing to include other manufacturers, and configure the SWRO treatment process for higher recovery and improved energy efficiency. Through Proposition 50 funding the ADC had proposed and was awarded a contract to pursue a second phase (ADC II) of demonstration. A partial list of members and participants that contributed in the ADC-II project includes:

- Avista Technologies, Inc.
- California Department of Water Resources
- California Energy Commission
- Carollo Engineers
- David Brown Union Pumps-Textron
- DOW FilmTec Corporation
- Energy Recovery Inc.
- Hydranautics Membrane
- Koch Membrane Systems
- Marin Municipal Water District
- Metropolitan Municipal Water District of Southern California
- Municipal Water District of Orange County
- San Diego County Water Authority
- Sandia National Laboratories
- City of Santa Cruz Water Department
- Toray Membrane America

- U.S. Naval Facilities Engineering Service Center Seawater Desalination Test Facility
- US Bureau of Reclamation
- West Basin Water District
- Zenon Environmental Corporation

ADC II testing began in August 2007 and included following specific objectives:

Low Energy and Staged Membrane Testing & Demonstration

This included testing and demonstrating three other manufacturers' membranes in addition to DOW Filmtec membranes using a similar protocol as ADC I. In ADC II, a 10 gfd flux test was added to the original 6.0, 7.5, and 9.0 gfd testing. The range of recoveries tested were 42%, 46%, and 50%. Each set of membranes were run through a 12-point test over an 8-week duration. The membranes that were tested were as follows:

- Koch TFC 2822HF-400
- Hydranautics SWC5
- Toray TM800E-400
- DOW Filmtec SW30 XHR-400i-High Boron

In addition to testing different SWRO membranes from different membrane manufacturers, ADC II also tested a hybrid approach from DOW Filmtec (ISD Hybrid). This concept internally stages membranes of different performances in a single 7-element pressure vessel and seeks to balance the feed water distribution and flux rate from the lead element to the end element. Per manufacturer request, the elements in the pressure vessel included both low energy and high rejection membranes and allowed a 55% recovery.

Pretreatment Testing

In ADC I, media filtration was the only method of pre-filtration employed prior to the seawater reverse osmosis (SWRO) process. For the ADC II study, two additional pre-filtration technologies were tested:

- GE Zenon ZeeWeed 1000 Ultrafiltration (UF) Membrane System
- Amiad Micro Fiber Prefiltration Technology

Pretreatment technology testing results from the GE Zenon ZeeWeed 1000 UF system and the Amiad Micro Fiber prefiltration were compared in terms of filtrate turbidity and silt density index (SDI) – a fouling indicator for RO. Industry recommends a turbidity of less than 1 NTU, and a SDI of less than 5. Amiad's MF system was unable to meet the < 5 SDI requirements continuously for the SWRO feed water, though it is a compact and self-cleaning unit that would be more suited to water supplies that are not open-intakes. GE's UF technology was able to produce reliable filtrate for the SWRO feed, while maintaining stable performance over time.

Innovative Flow Regimes to Increase Recovery

As a natural result of isobaric energy recovery technology testing, there are flow schemes that can improve the performance of higher recovery seawater and brackish water systems. These new flow schemes were used to demonstrate recoveries of seawater systems up to 65%, while still maintaining acceptable water quality and low energy consumption. Typically, the low pressure feed flows and the high-pressure brine flows in the isobaric pressure exchanger (PX)

are equal. This mode of operation is considered a balanced PX flow. The flow controls on the low and high-pressure ports into the PX are independent. When the high-pressure brine flow into the PX is decreased, the flows are unbalanced and this flow regime essentially allows the SWRO process to run in a controlled concentrate recycle mode. The unbalanced flows allow a lower RO recovery, but increase the overall system recovery. Tests were conducted at a variety of conditions to determine the range of possible operating conditions and the optimum operating point.

Based on the membrane test results at each flux and corresponding recovery, the SWRO specific energy and total treatment energy will be computed and used in a Net Present Value model to project the total treatment cost for a 50 mgd SWRO treatment facility. The optimum flux and recovery operating condition that provides the lowest practical treatment cost is selected as the Most Affordable Point (MAP).

RO permeate salinity goal of less than 500 mg/L TDS was achieved for all tested membranes at all tested flux rates. Overall, the low energy membrane elements (DOW Filmtec SW30XLE-400i, DOW Filmtec ISD Hybrid, and Koch TFC 2822HF-400) demonstrated the ability to produce acceptable permeate quality (TDS < 500 mg/L and Boron <1.45 mg/L) with respect to TDS and boron. The tested membrane with lowest energy consumption was achieved with the DOW Filmtec SW30XLE-400i at 6 kWh/kgal (1.58 kWh/m^3), when the system operated at 6 gfd and 42% RO recovery. The ADC considers this to be a world record for a SWRO system operating at commercially viable recovery and flux rates.

Permeate TDS from the higher rejection membrane models (DOW Filmtec SW30HR-380, DOW Filmtec SW30HRLE-400i, Toray TM800E-400 and Hydranautics SWC 5) were half the permeate TDS of the low energy membranes. The higher rejection membranes produced better permeate quality but at the expense of higher energy consumption. Hydranautics SWC5, which is considered a high rejection membrane, demonstrated the best water quality but still maintained relatively low to mid range energy consumption. For high recovery testing in the subsequent unbalanced flow regimes, Hydranautics SWC5 was selected as the candidate membrane.

The lowest projected SWRO water treatment facility energy consumption occurred at 45% system recovery /45% RO membrane recovery. This is consistent with previous testing and typical industry recommendations for lowest energy operation. Though the RO specific energy generally increases with recovery rate, between 40-45% system recovery the total energy required for treatment decreases or remains stable up to approximately 50%. This is due to the increased volume of raw feed water that must be pumped and treated at lower recovery rates to obtain the same volume of permeate.

From the ADC's 50 MGD (189,000 m^3/day) NPV model, the projected cost of water over the range of system recoveries ranged from \$3.00-3.16/kgal (\$0.79-\$0.83/m^3) for the 7.5 gfd flux tests and \$3.00-3.15/kgal (\$0.79-\$0.83/m^3) for the 9.0 gfd flux tests. Over the range of flux and RO membrane recoveries that were tested, the cost per unit volume remained nearly constant between 45 and 55% system recovery.

The cost per unit volume reaches a minimum point at 50% system recovery / 45% RO membrane recovery at 9.0 gfd and at 55%/50% at 7.5 gfd. The balanced PX operation for low energy membrane tests in ADC I and II testing on the suite of membranes from various manufacturer showed the lowest estimated total water cost at 50% recovery. Operating at a recovery of 50% is slightly different from industry recommendations that advocate lower

recoveries (e.g. 45%) to maximize membrane life, reduce cleaning frequencies, and produce the highest quality permeate. However, the impact of high recovery on membrane replacement costs, cleaning frequencies, and permeate quality are factored into the ADC's cost estimate.

The ADC was able to demonstrate total energy consumption for seawater desalination at levels of 10.4 to 11.3 kW/kgal (2.75-2.98 kWh/m^3) at a projected total cost of $2.78-3.00/kgal ($0.73-0.79/m^3). These costs include escalations in commodity costs and also the intake, pre-filtration and finished water conveyance. The resulting energy levels and cost figures are comparable to other traditional sources. For example, in Southern California the State Water Project, which transports water from Northern California to Southern California, consumes on average 10.4 kWh/kgal (2.75 kWh/m^3). In San Diego, California end users can pay more than $6.00/kgal ($1.58/m^3). Therefore, Southern California seawater desalination is a drought-proof, affordable and reliable new source of high quality, potable fresh water.

3.0 Goals and Objectives of the Project

The overall objective of the Affordable Desalination Collaboration (ADC) was to demonstrate affordable, reliable, and environmentally responsible reverse osmosis desalination technologies and to provide a platform by which cutting edge technologies can be tested for desalination energy minimization and measured for their ability to reduce the overall cost of the SWRO treatment process.

In ADC I, the test phase spanned from May 2005 to April 2006. ADC I focused on demonstrating the cost of optimized desalination using a combination of state-of-the-art, commercially available technologies that minimize energy consumption and are typically scalable to 50 million gallons per day (mgd) (189,000 m^3/day). Testing included three membrane sets from DOW Filmtec (SW30 HR-380, SW30 XLE-400i and SW30 HRLE-400i) and varying flux and recovery to seek the most cost-effective operating point. The most cost-effective operating point was estimated by calculating the net present value (NPV) for each tested condition, accounting for both capital and operating costs. The RO specific energy consumption using the ADC I's SWRO process design was demonstrated to range from 6.92 to 7.75 kWh/kgal at the most cost effective operating points (or most affordable point (MAP)). The lowest RO process energy consumption, 5.98 kWh/kgal (1.58 kWh/m^3), was demonstrated using the DOW Filmtec SW30 XLE-400i membrane at 6 gfd (244 L/m^2/d) and 42.5% recovery.

Table 3.1 summarizes the MAP results from ADC I.

Table 3.1 ADC I Most Affordable Point Results

Membrane	Flux (gfd)	Recovery (%)	RO Specific Energy (kWh/gal)
DOW Filmtec SW30 HR-380	7.5	50	7.75
DOW Filmtec SW30 XLE-400i	9.0	50	6.92
DOW Filmtec SW30 HRLE-400i	7.5	50	7.64

From the ADC I study, it was recommended that ADC II objectives would include further research into feed water pretreatment options for the SWRO process, expand the membrane testing to include other manufacturers, and configure the SWRO treatment process for improved

recovery and energy efficiency. ADC II testing began in August 2007 and included the following specific objectives:

- Low energy and staged membrane testing;
- Pretreatment testing;
- Innovative flow regimes to increase recovery.

Low Energy and Staged Membrane Testing & Demonstration

This included testing and demonstrating three other manufacturers' membranes in addition to DOW Filmtec membranes using a similar protocol as ADC I. In ADC II, a 10 gfd flux test was added to the original 6.0, 7.5, and 9.0 gfd testing. The range of recoveries tested were 42%, 46%, and 50%. Each set of membranes were run through a 12-point test over an 8-week duration. The membranes that were tested were as follows:

- Koch TFC 2822 HF-400
- Hydranautics SWC5
- Toray TM800E-400
- DOW Filmtec SW30 XHR-400i-High Boron

In addition to testing different SWRO membranes from different membrane manufacturers, ADC II also tested a hybrid approach from DOW Filmtec (ISD Hybrid). This concept internally stages membranes of different performances in a single 7-element pressure vessel and seeks to balance the feed water distribution and flux rate from the lead element to the end element. Per manufacturer request, the elements in the pressure vessel included both low energy and high rejection membranes and allowed a 55% recovery.

Pretreatment Testing

In ADC I, media filtration was the only method of pre-filtration employed prior to the SWRO process. For the ADC II study, two additional pre-filtration technologies were tested:

- GE Zenon ZeeWeed 1000 Ultrafiltration Membrane System
- Amiad Micro Fiber Prefiltration Technology

Innovative Flow Regimes to Increase Recovery

As a natural result of isobaric energy recovery technology testing, there are flow schemes that can improve the performance of higher recovery seawater and brackish water systems. These new flow schemes were used to demonstrate recoveries of seawater systems up to 65%, while still maintaining acceptable water quality and low energy consumption. Tests were conducted at a variety of conditions to determine the range of possible operating conditions and the optimum operating point.

While evaluating the aforementioned process alternatives, it was important that potable water quality goals were also met. Potable water quality goals for the ADC II study are summarized in Table 3.2. The potable water quality will meet federal standards, but through a consensus, the ADC committee and members placed a more stringent requirement for what the industry anticipates to be a more realistic goal for the permeate total dissolved solids (TDS) and boron concentrations for this project.

Table 3.2 ADC II Potable Water Quality Goals

Parameter	Unit	Federal	ADC II
TDS	mg/L	< 500[1]	< 200
Boron	mg/L	< 1.45[2]	< 1.045
Chloride	mg/L	< 250[1]	< 250[1]

Notes:
1. Federal secondary standard
2. Committee consensus of realistic potential future standards

4.0 Technology Background

4.1 Pretreatment

Reverse osmosis membrane longevity is largely dependent on the feed water quality provided by a pretreatment system. Ineffective or unreliable pretreatment can adversely affect the RO system with problems such as accelerated membrane fouling, excessive membrane cleaning, low recovery rates, high operating pressures, and poor quality permeate. The extent and complexity of the pretreatment systems for colloidal and organic fouling depends on site-specific conditions. Regarding the assessment of the propensity of feed waters for colloidal fouling, the most widely accepted quality criterion, which is endorsed by the desalination industry, is the silt density index (SDI). Recommended RO feed water should have a turbidity of less than 1 NTU, and a SDI of less than 5. In ADC I, an anthracite/sand/gravel multimedia filter was used as a pretreatment system prior to SWRO. For ADC II, two pre-filtration systems from GE and Amiad were tested. Details of the technologies are described in the subsequent sections.

4.1.1 Multi-Media Filtration

In any water treatment process train, the fundamental system that removes particulate matter is filtration. The most common filtration process employs a granular medium of a certain size and depth. The pretreated water passes through the filter bed, where the majority of the particulates are removed in the top portion, as well as through the entire depth of the bed.

Multi-media filters contain several types of media and gravel under bedding. This filtration is a conventional pretreatment method where the coarse media layers in the top of the tank trap large particles, and successively smaller particles are trapped in the finer layers of media deeper in the bed. The result is a highly efficient filtering since removal takes place throughout the entire bed.

A multi-media filter is backwashed using reverse or upward flow of water through the filter bed. The various layers of media retain their stratification because each material has a different density. Multi-media depth filters typically remove particles 5-15 microns in size or larger. Coagulants may be added to enhance the removal efficiencies of particulates in the media filtration process. Silica sand and anthracite coal are the most commonly used types of filter medium. Gravel, sand and anthracite were the selected media loaded in the filters used in ADC I. The design parameters for the multi-media filters used in the ADC I study are presented in Table 4.1. Figure 4.1 depicts the multi-media filters used at the ADC test site.

Table 4.1 Design parameters for ADC I Multi-Media Filtration

Multi Media Filter Specification	Unit	Value
Manufacturer		ALAMO
Quantity		2
Diameter	Inch	48
Height	Inch	72
Loading Rate	gpm/ft^2	3 to 6
Depth	Inch	
Anthracite		18
Sand		10
Gravel		6
Grain Size	mm	
Anthracite		0.85 to 0.95
Sand		0.45 to 0.55
Gravel		0.3
Uniformity Coefficient (U.C)	-	
Anthracite		<1.4
Sand		<1.4
Gravel		<1.4

Figure 4.1 Multimedia Filters at the ADC Test Site.

4.1.2 GE Zenon ZeeWeed 1000 Ultrafiltration (UF)

Using the data gathered from the media filters used in ADC I as a baseline, ADC II sought to test out additional pre-filtration technologies in the second phase. ZeeWeed® immersed hollow fiber ultrafiltration (UF) membranes are increasingly favored over conventional granular media systems for their ability to provide superior protection of valuable RO systems from particulate or biological fouling. UF membranes form a physical barrier that effectively blocks virtually all suspended particles from entering the feed water stream regardless of the turbidity of the raw water. This is particularly important for desalination plants where turbidity can vary greatly during sea storms. UF membrane fibers are inherently insensitive to upsets caused by high turbidity or variable raw water quality. ZeeWeed® systems can consistently deliver RO feed water with a turbidity of less than 0.1 NTU and a low silt density index (SDI).

One ZeeWeed® 1000 membrane module consists of thousands of horizontally oriented hollow fibers mounted between two vertical plastic headers. Shrouds enclose the fibers, leaving only the bottom and top open to create a vertical flow upwards through the fiber bundles. Water is filtered by applying a slight vacuum to the end of each fiber which draws the water through the tiny pores and into the fibers themselves. The pores form a physical barrier that allows clean water to pass through while blocking unwanted material such as suspended solids, bacteria, pathogens and certain viruses. Modules are joined together to form a cassette, which is the smallest operable unit of the filtration system. Each cassette can have a variety of module configurations depending on the amount of water that the cassette is required to treat. Multiple cassettes are joined to form what is known as a process train. The train is a production unit containing a number of cassettes immersed in a membrane tank. Multiple process trains form a ZeeWeed treatment plant. Table 4.2 summarizes the design criteria for the UF system. The ZeeWeed 1000 UF system at the test site is shown in Figure 4.2.

Table 4.2 Design parameters for ADC II ZeeWeed 1000 UF System

UF Pretreatment Specification		
Membrane system manufacturer		GE/Zenon
Membrane system		Z-Box S18
Membrane module		ZeeWeed 1000 V3
Membrane type		Immersed hollow fiber
Nominal Pore Size	microns	0.02
Number of Membrane Tanks		3
Minimum Net Permeate Production	gpd	96,000
Maximum Net Permeate Production	gpd	216,000
Design Flux (at max capacity)	gfd	20
Recovery	%	95

Figure 4.2 GE ZeeWeed® 1000 system at the test site.

The ZeeWeed® 1000 system is operated as a simple semi-batch process where filtration and backwash alternate in sequence. During the filtration cycle, permeate is withdrawn through the membranes by applying vacuum to the permeate piping. The water removed by permeation is replaced with feed water to maintain a constant level in the tank. No aeration is used while in filtration mode. At the end of each filtration cycle (typically 15 – 60 minutes), a backwash is performed (typically for 30 seconds). During the backwash, the membranes are simultaneously aerated and backpulsed to dislodge solids. Solids are loosened from the surface of the membranes and suspended in the process tank due to the aeration. Once the backwash is complete, the process tank is completely drained and aerated, which rids the tank of any accumulated solids. The process tank is then refilled with feed water and production resumes.

It should be noted that no Arcal or Amiad SAF automatic self-cleaning screen filters (strainers) were used ahead of the Zenon system. Self-cleaning fine (80-100 micron) strainers are sometimes used to filter out sharp shell particles that can puncture the UF membranes. In our case, an intermediate tank was installed ahead of the Zenon system. The intake to the Zenon unit was installed on the side of the intermediate tank with a drain at the bottom of the tank. This way shells and shell particles could settle to the bottom of the tank and the tank was intermittently flushed to drain.

4.1.3 Amiad Micro Fiber Pre-Filtration

The Amiad Micro Fiber pre-Filtration (AMF) system is an automatic self-cleaning system that delivers filtration in the 2-to-20 micron range without consumable media- eliminating filter aids, cartridges and bag filters. This minimizes the labor and disposal costs associated with consumable media. Amiad's filtration system is based on suction-scanning technology. As the filter screen captures particles, the pressure differential between the inlet and outlet increases. When the pressure differential reaches 7 psi, the Amiad system opens an exhaust valve which drains the suction scanner, a hollow 316L stainless steel tube tipped with nozzles just millimeters from the screen surface. Opening the exhaust valve to the atmosphere causes water to flow in a high-velocity stream backwards across the screen into the nozzles, carrying the captured particles and/or filter cake, with it. The nozzles concentrate the suction effect on less than one square inch of screen at a time, creating a powerful and highly effective cleaning force - a phenomenon Amiad had coined as "focused back flushing." The suction scanner travels down the screen in a spiral pattern at a fixed speed, cleaning 100% of the screen surface in a 25-to-40-second stroke. The suction-scanning cleaning cycle can be initiated by a pressure-differential switch or by a timer. The spiral motion of the scanners is powered by a motor. Because the suction-scanning technology uses a very small amount of water - less than 1% of the volume in most cases - the entire cleaning process can take place without interrupting system flow. Due to the lack of chemicals, polymers, or filter aids to be flushed with the filter cake, suction-scanning technology can be considered a clean technology.

For ADC II, in order to limit the load on the AMF, an Amiad SAF automatic self-cleaning screen filter (strainer) with an 80 micron screen was staged before the AMF. The AMF filter was tested using 2, 3, and 10 micron cassettes. Figure 4.3 shows the AMF system used during the ADC II test phase. Table 4.3 summarizes the design criteria for the AMF filters onsite.

Table 4.3 Design parameters for ADC II AMF Prefiltration System

Prefiltration Specification		
Membrane system manufacturer		Amiad Filtration Systems
Average Flow Rate	gpm	120
Screen Filter (Strainer)		SAF
Pore Size	micron	80
Operation		Automatic Self Cleaning
Pressure Differential Trigger	psi	7
Micro Fiber Filter		AMF
Pore Size	micron	2 / 3 / 10
Filter Type		cassette

Figure 4.3 AMF Filter System at the test site

4.2 Seawater RO (SWRO) System with Isobaric Energy Recovery

Figure 4.4 shows the flow path of a typical SWRO system. A feed water supply pump provides sufficient feed flow and pressure to the inlet of the main high-pressure pump and isobaric pressure exchange (PX). The main high-pressure pump flow (C) is equal to the permeate flow (F) plus a small amount equal to the lubrication/leakage flow in the PX. The pressurized feed stream (D) exiting the PX combines with the main high-pressure pump flow to feed the RO membranes. The reject brine from the RO membranes (G) passes into the PX, where its pressure and flow are transferred directly to a portion of the feed water. The PX boost pump (not the main high-pressure pump) is required to circulate the flow through the high-pressure circuit composed of flows, D, E, and G and H.

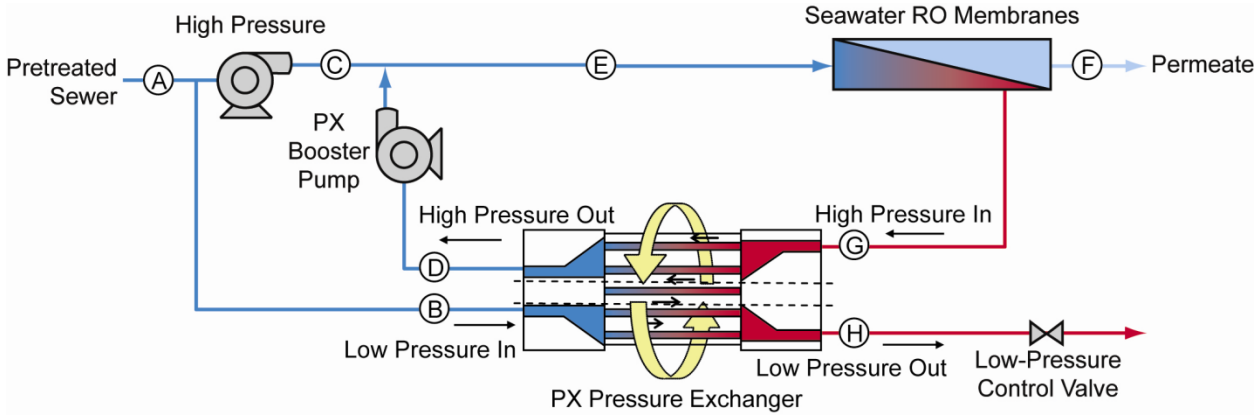

Figure 4.4 Optimized SWRO system design.

The power required to drive the high-pressure pump(s) is the largest component of the operating cost of SWRO systems. Most of the energy imparted into the feedwater flowing to the SWRO membranes leaves the membranes as brine reject water. Incorporating energy recovery devices, such as the isobaric pressure exchanger (PX), recovers pressure energy from the brine reject stream. The effectiveness of an energy recovery device can be characterized by quantifying the high-pressure pump energy required to produce a given flow rate of permeate with an SWRO system equipped with the device. The energy required to operate the high-pressure portion of a SWRO system equipped with PX technology is the sum of the high-pressure pump and booster pump consumption. This energy is expressed in terms of the RO specific energy or the energy required per unit output of permeate, in units of kWh/m^3 or kWh/kgal. When energy allowances for intake, pretreatment, conveyance and distribution of the entire facility is accounted for in addition to the SWRO, the result is expressed as a Total Treatment Energy.

In a SWRO system with isobaric energy recovery, the main high-pressure pump is sized to equal the RO permeate flow plus the small amount of PX lubrication/leakage flow, not the full feed flow. Therefore, the PX significantly reduces flow through the main high-pressure pump. This point is significant because a reduction in the size of the main high-pressure pump results in lower capital and energy costs.

Because of the pressure exchange process inherent in the PX, the high and low-pressure flows are independent and must be controlled separately. In Figure 4.4, the high-pressure flow is controlled through variable frequency drive (VFD) operation of the boost pump and a high pressure flow meter and the low pressure flow is controlled via the low pressure control valve and a separate flow meter. It is traditional to maintain the high pressure and low pressure flows at approximately equal rates, but in some cases, it can be desirable to create an imbalance in these flows.

4.3 Pressure Exchanger (PX) Isobaric Energy Recovery

The PX unit utilizes the principle of positive displacement to pressurize filtered RO feed water by direct contact with the concentrated high-pressure brine/reject stream from a SWRO system. Pressure transfer occurs in longitudinal ducts in a ceramic rotor, which rotates inside a ceramic sleeve. Each duct operates as an individual isobaric vessel or chamber. The rotor-sleeve assembly is held between two ceramic end covers. At any given instant, half of the ducts are exposed to high pressure flow and half the ducts are exposed to the low pressure flow. As the rotor turns, ducts pass a sealing area that separates the high pressure flow from the low pressure flow. This separation allows the high and low pressure flows to operate independently at different pressures, rates and even in opposite directions. Figure 4.5 illustrates PX operation, when the high and low pressure flows are balanced i.e. B=D and H = G.

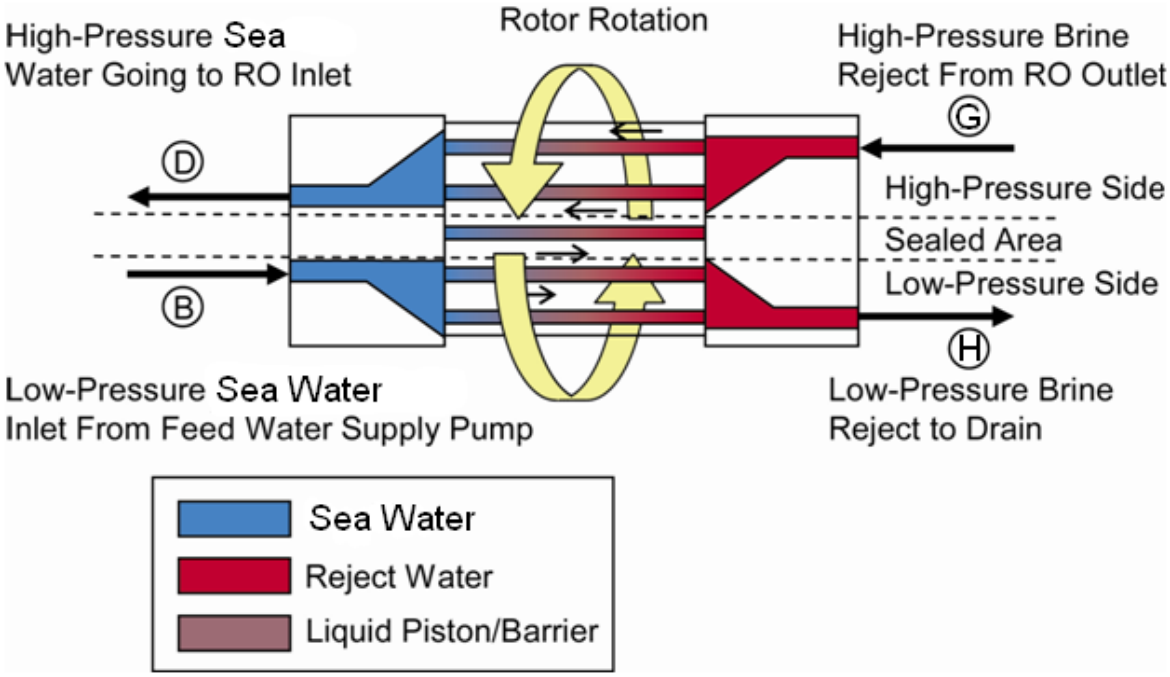

Figure 4.5 PX internal flow path.

Feed water from the supply pump flows into the low-pressure ducts on the left (B). This flow expels brine reject from the low-pressure ducts at the right (H). Similarly, after the rotor ducts rotate past a sealing area, high pressure brine flows into the high pressure ducts at the right (G) exposing the feed water to high pressure and expelling the feed water from the high pressure ducts on the left side (D). This two-stroke exchange process is repeated for each duct with every rotation of the rotor such that the ducts are continuously filling and discharging. At 1,200 rpm, one revolution is completed every 1/20 seconds limiting the amount of mixing that can occur.

During each cycle the brine and RO feed water are separated by a liquid piston barrier composed of a mixture of brine and feed water. The RO feed is in direct contact with the liquid piston resulting in a small amount of contamination or mixing of brine and feed water and there are two ways that this mixing effect can be considered.

Considering a mass balance approach to the PX, volumetric mixing is the ratio of the volume of brine that transfers into a volume feed water and can be calculated with the following equation independent of PX high and low pressure flow balance:

$$\text{Volumetric Mixing} = \frac{\text{Brine out Salinity} - \text{Feed in Salinity}}{\text{Brine in Salinity} - \text{Feed in Salinity}}$$

where salinity is measured at the inlet and outlet connections of the PX device or array of PX devices. Volumetric mixing is a function of the ratio of the high and low pressure flow rates, but

it is independent of the membrane recovery rate. Volumetric mixing in a PX device is about 6 percent when the high and low pressure flow rates are equal.

Practically, this volumetric mixing must be accounted for during the reverse osmosis process modeling to determine the impact to the feed pressure and permeate total dissolved solids, which both will increase as a result of the increase in feed water salinity. The percent increase in salinity at the feed to the RO membranes can be approximated by the empirically arrived at equation below:

$SI \cong R \times M \times 1.04$ (ERI Doc. No. 80088-01)

where:
SI = salinity increase
R = membrane recovery (affects concentration difference between feed and brine)
M = volumetric mixing (approximately 6% @ balanced flows)

It is important to distinguish between lubrication flow (or leakage) and mixing in isobaric energy recovery devices. Lubrication flow occurs primarily at the seals which are located at the ends of rotor ducts. High-pressure flow leaks to low pressure flow resulting in a slight loss from the high-pressure inlet flow (G) to the high-pressure outlet flow (D) and a corresponding gain from the low-pressure inlet flow (B) to the low-pressure outlet flow (H). Mixing occurs within the rotor ducts and does not change the lubrication flow rates. The lubrication flow rate may change if the seals become damaged, however, mixing will not increase with time or wear. Mixing and lubrication flow are independent and unrelated (ERI Doc. No. 80088-01)

4.4 Balanced and Unbalanced Flow Schemes

There are several ways in which the low and high pressure flows can be adjusted during PX operation.

A. Balanced PX Flows:

   Low pressure inlet flow equals the high pressure outlet flow or B = D and G = H. At balanced flows the membrane recovery (F/E) and system recovery (F/A) are equal.

B. Unbalanced PX Flows:

   - <u>Under flush</u>

     The ratio of low-pressure inlet flow divided by high-pressure outlet flow is less than 1. Under-flush flow occurs when D > B, G > H and can be used to increase system recovery (F/A) while maintaining or decreasing RO recovery (F/E).

   - <u>Overflush</u>

     The ratio of low-pressure inlet flow divided by high-pressure outlet flow is greater than 1. Over-flush occurs when B > D, H > G and decreases system recovery (F/A).

Flows B and H are controlled using the low pressure control valve and are independent from flows D and G. Flows D and G are controlled by a variable frequency drive on the PX boost pump.

To reduce mixing in isobaric devices excess low pressure feed water is supplied to over-flush the chambers of any residual brine. Over-flushing reduces mixing in the energy recovery device as illustrated in Figure 4.6. However, this over-flush condition will require increased feed flow, reducing system recovery.

Unbalanced PX Flows by under-flushing can be used to create a brine recirculation process to decrease RO recovery while maintaining or increasing system recovery. This flow scheme is part of the test conditions outlined for this study. The advantages of this mode of operation include:

- Improved membrane boundary layer condition by maintaining “high” velocity flows
- Maintain brine flow requirements within manufacturers’ specifications
- Maximum allowable recoveries within manufacturer’s specifications

When the flows in the PX are unbalanced for higher system recovery, the procedure was to set the system recovery equal to the RO recovery and then increase the system recovery in 5 percent increments.

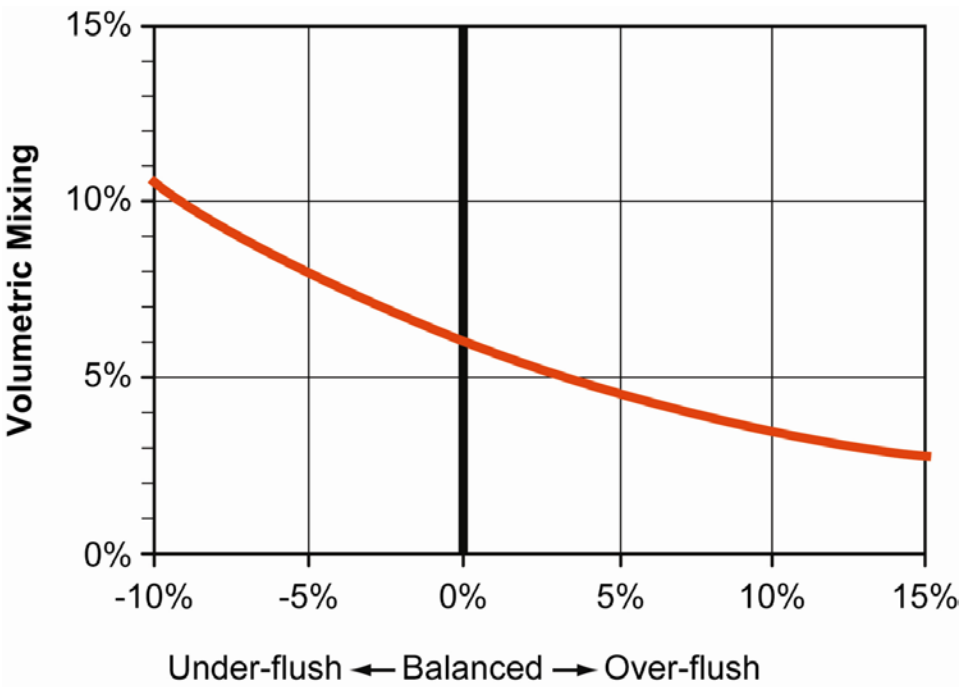

% Flow Balance = (B-D)/B * 100

Figure 4.6 Balanced flow, over and under-flushing versus PX mixing (ERI Doc No. 80088-01).

5.0 Project Implementation

The ADC had originally proposed 7 tasks and in accordance with the contract, the ADC requested and added 4 additional task items. During the final year of operation, the ADC added the Amiad Fiber Filter task in order to help replace other tasks that were cancelled. Table 5.1 provides a list of all the tasks the ADC had proposed and attempted over 2 years of testing.

Table 5.1 Total Project Tasks ADC II Proposition 50 Project

Task #	Description	Original Project	Added items	Actual Totals	Comments
1	Zenon 1000 Pilot Demonstration	20%		20%	Completed
2	TorayTM800C low energy membrane demonstration	10%		10%	Completed
3	Koch low energy membrane demonstration	10%		10%	Completed
4	Hydranautics low energy membrane demonstration	10%		10%	Completed
5	DOW Hybrid Membrane Demonstration	10%		10%	Completed
6*	TorayTM800C low energy membrane demonstration (re-test)		10%	10%	Completed
7*	DOW FILMTEC high Boron rejection membrane demonstration		10%	10%	Completed
8*	Koch high rejection membrane Demonstration		10%	0%	Canceled, time/budget constrains
9	Unbalanced PX high recovery testing	20%		20%	Completed
10	Interstage-PX hybrid high recovery testing	20%		0%	Canceled, mfgr backed out
11*	Demonstrate OPT's X-pump and energy recovery system		10%	0%	Canceled, mfgr backed out
12*	Amiad fiber filter test		10%	10%	Completed
		100%	50%	110%	

**Additional items added to the project at no cost to the state.*

The table provides the percent contribution to the total project for each task. The third column provides the original percent contributions for the original project tasks. The fourth column provides comparable percentages based on the time and costs of the additional tasks compared to the original tasks. The fifth column sums up the percent contribution of all the tasks that were actually completed. The additional items designated with an asterisk were added to the project at no additional state cost.

Task 10 was the only original project task that was not completed. The reason was that the energy recovery manufacturer revealed that they could not provide key equipment for the test. Since the ADC had already tested seven similar membranes and ADC II was facing time and budget constraints, the ADC elected to skip Task 8 in order to complete Task 9, which would provide more significant results due to its novel nature. Task 11 also had to be cancelled because the manufacturer was unable to provide their pump and energy recovery equipment in time for the project.

In the end after originally proposing 7 tasks, ADC II completed 9 tasks that amounted to approximately 110% of the original proposed project. Table 5.2 summarizes the project timeline for ADC II.

Table 5.2 ADC Project Timeline.

Description	Test Period
ADC I - Low Energy Membranes	
DOW Filmtec SW30 HR-380	5/2005 - 11/2005
DOW Filmtec SW30 XLE-400i	12/2005 - 2/2006
DOW Filmtec SW30 HRLE-400i	2/2006 – 4/2006
ADC II- Low Energy Membranes	
Koch TFC 2822 HF-400	8/2007 – 11/2007
Hydranautics SWC5	11/2007 – 2/2008
Toray TM800E-400	5/2008 – 7/2008
DOW Filmtec SW30 XHR-400i	9/2008 – 12/2008
ADC II- Staged Membranes	
DOW Filmtec ISD Hybrid	2/2008 – 5/2008
Innovative Flow Regime	
PX Unbalanced with Hydranautic SWC5	1/2009 – 7/2009
Pretreatment	
Media Filtration	5/2005 – *6/2008
GE Zenon ZeeWeed UF	*9/2008 – 11/2009
Amiad AMF	4/2009 – 11/2009
Note: Testing was halted in July 2008 and resumed in September 2008 at the request of the Navy for their flow test to prevent exceeding their intake permit capacity.	

5.1 ADC Demonstration System and Design Criteria

The ADC operates at the US Navy's Seawater Desalination Test Facility at Port Hueneme, California. The facility is part of the Naval Facilities Engineering Service Center and is located at the base. The Seawater Desalination Test Facility is unique because it is fully instrumented for evaluating water treatment processes and because of its access to the Pacific Ocean. The layout of the ADC's demonstration unit in relation to the site is shown in Figure 5.1.

As indicated, the process uses an open intake, pretreatment filter, cartridge filter, high efficiency positive displacement pump, and high efficiency isobaric energy recovery device. First, (1) the water is taken from a short pier that extends into the Port Hueneme Harbor channel. Seawater is then pumped (2) to a central 5000-gallon collection tank (3) that stores seawater for the entire facility. The media filter used for pretreatment in ADC I was replaced by GE ZeeWeed® 1000

UF system after the testing of different membranes were completed. Amiad's AMF system was tested independently. The seawater is then fed by gravity to the intake of the UF Filtration Skid (4). After the UF system, the treated RO feed water then passes onto the ADC's seawater desalination system (5). Backwash water from the process is sent to the backwash-percolation basin (6) where it is allowed to percolate through the ground back to the sea. The product water and reject water from the SWRO process are recombined into seawater at the central discharge collection point (7). Finally, reconstituted seawater flows back to the boat channel through an underground pipe and outfall (8).

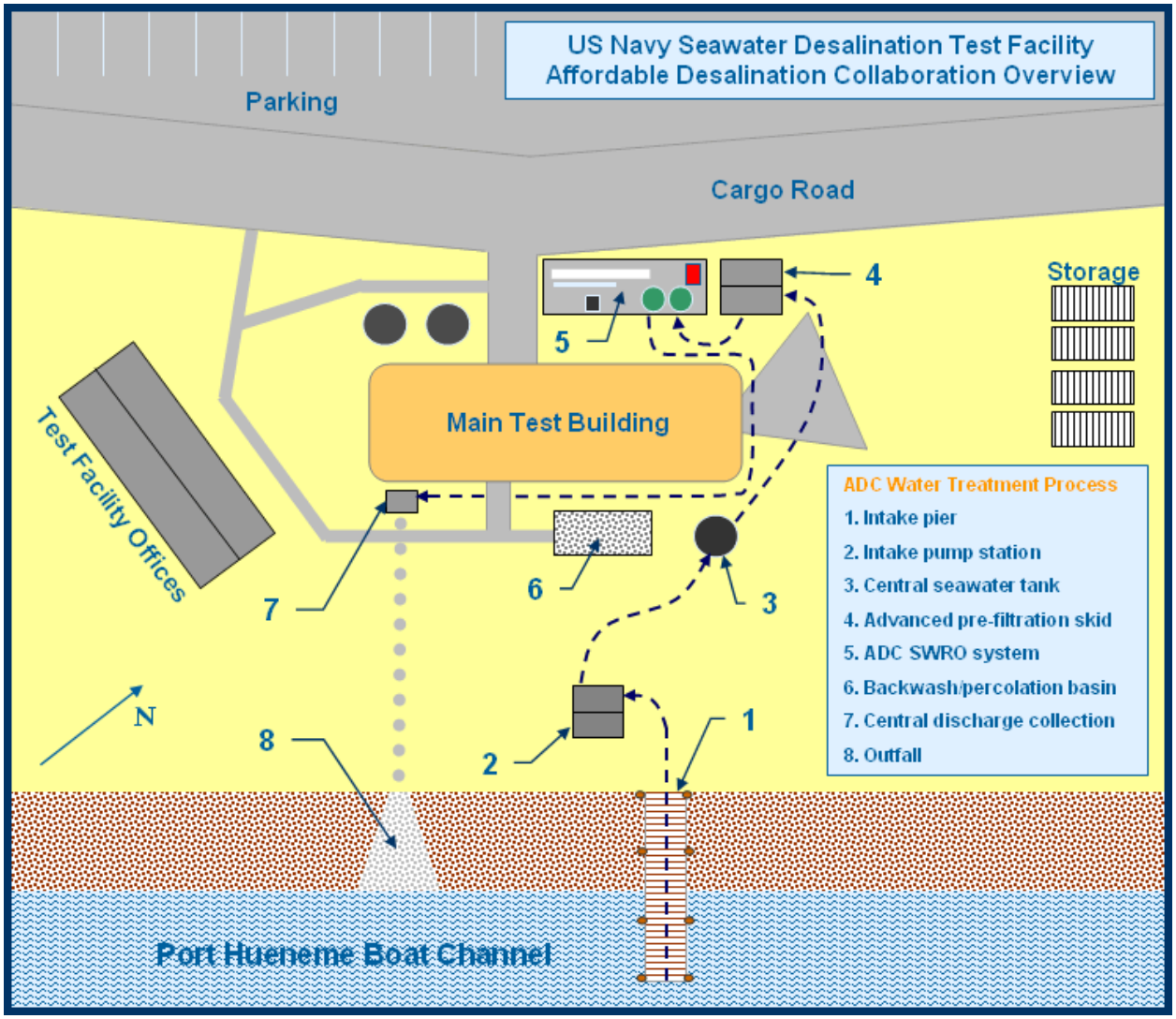

Figure 5.1 ADC Demonstration Plant Site Layout.

The ADC's demonstration scale SWRO plant is designed to produce between 48,100 to 75,600 gallons per day (182 to 286 m^3/day) of permeate. The configuration is presented in Figure 5.2. The design criteria for these components are presented in Table 5.3.

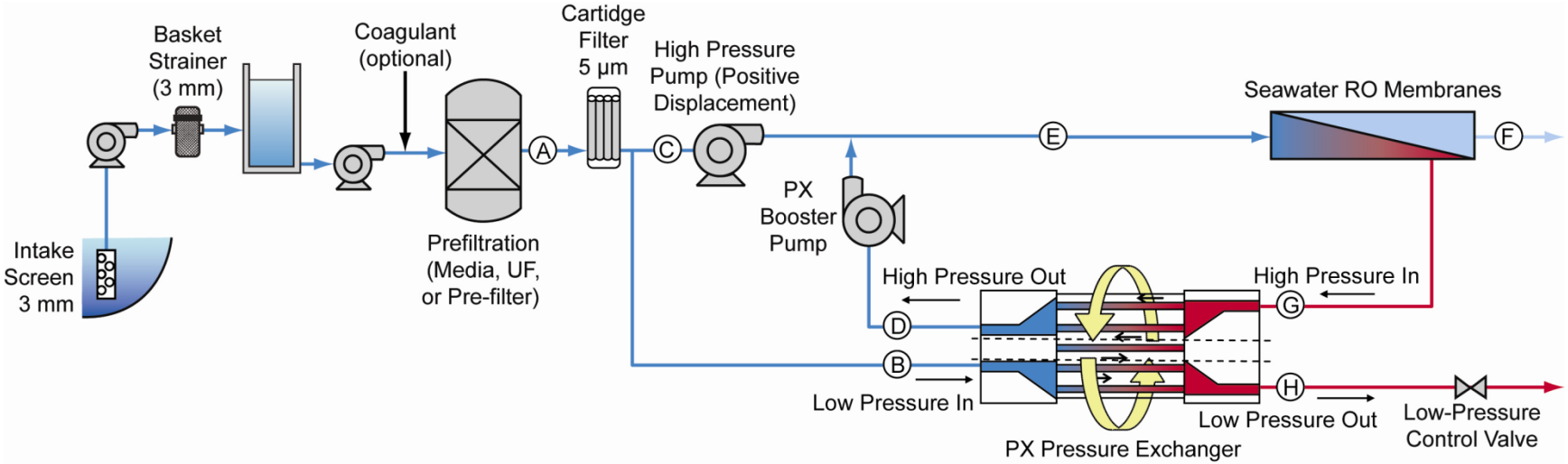

Stream	Description
A	Prefiltered Effluent
B	PX LP Inlet / Seawater
C	Main HP Pump Inlet
D	PX HP Outlet / PX Booster Pump In
E	RO Feed Stream
F	RO Permeate
G	PX HP Inlet / RO Concentrate
H	PX LP Outlet / System Concentrate

Typical ADC Operating Conditions

Stream	A	B	C	D	E	F	G	H
GPM	93	51	43	51	93	42	51	51
PSI	35	20	20	737	763	5	747	10
TDS	34K	34K	34K	35K	35K	103	66K	65K

Figure 5.2 Process Flow Schematic.

Table 5.3 Design Criteria for ADC's SWRO Demonstration Scale Equipment

Parameter		Unit	Value
Media Filter			
	Loading Rate	gpm/ft^2	3 to 6
	Depth/Grain Size/U.C. of Anthracite	in/mm/-	18 / 0.85-0.95 / <1.4
	Depth/Grain Size/U.C. of Sand	in/mm/-	10 / 0.45-0.55 / <1.4
	Depth/Grain Size/U.C. of Gravel	in/mm/-	6 / 0.3 / <1.4
Pre-Treatment (Membrane)			
	UF Specs		
	Size	micron	0.01
	Flux	gfd	20
		L/m2/day	815
Pre-Treatment (Membrane)			
	Amiad AMF Specs		
	Size	micron	2/3/10
	Loading Rate	gpm	120
Cartridge Filter			
	Cartridge Specs		22 each, #2, 5-micron x 40"
	Loading Rate	gpm/10-in.	~1
Membrane System			
	Models		ADC I Test DOW FILMTEC™ SW30HR-380, DOW FILMTEC™ SW30XLE-400*i*, DOW FILMTEC™ SW30HR LE-400*i* ADC II Test Koch TFC 2822HF-400 Hydranautics SWC5 DOW FILMTEC™ ISD Hybrid Toray TM800E-400 DOW FILMTEC™ SW30XHR-400*i*
	Diameter	Inch	8
	Elements per Vessel	No.	7
	Vessels	No.	3
High Pressure Pump	Type		Positive Displacement
	Model		David Brown Union, Model TD-60
	TDH	ft (psig)	1385 to 2305 (600 to 1000)
Energy Recovery	Type		Pressure Exchanger
	Model		Energy Recovery, Inc. Model PX-70S
PX Booster Pump	Type		Centrifugal
	Model		Energy Recovery, Inc. Model HP-8504
	TDH	ft (psig)	70 to 115 (20 to 50)

Note:
U.C. – Uniformity Coefficient for media
gfd – gallons per feet per day

The RO array consists of 3 CodeLine pressure vessels, each containing 7 membrane elements. The diameter of each element is 8". The flux and recovery can be varied from 6-9 gfd (244-367 L/m^2/d) and 35-60%, respectively. The overall capacity of the system can be varied from approximately 200-300 m^3/day (50,000 - 80,000 gpd) by changing the recovery and pump

speed. The demonstration scale testing is located at the US Navy's Seawater Desalination Test Facility in Port Hueneme, California.

5.2 Demonstration Test Approach

The ADC tested each membrane set at a pre-determined matrix of flux rates at 6-10 gfd and recovery points for ADC I and II respectively. ADC I tested 3 sets of DOW FILMTEC membranes at flux rates of 6, 7.5 and 9 gfd and 35, 42.5 and 50% recovery. ADC II extended this test regime to include 6, 7.5, 9 and 10 gfd at 42.5, 46 and 50% recovery. The ADC eliminated the 35% recovery point from ADC II testing due to the results from ADC I that showed significantly higher costs at this lower recovery point. In the case of the DOW FILMTEC ISD Hybrid membranes, the ADC tested a point at 9 gfd and 55% recovery per the manufacturer's request.

Testing for all SWRO membranes began with a 2-week membrane ripening period at base line conditions of 7.5 gfd and 42.5% to ensure the membranes had reached steady state operation before the flux or recovery was tested. The membrane ripening period is used to establish a stable baseline for membrane testing. A multi-point testing approach was adopted for each of the membranes tested. This approach involved changing the RO and system recovery approximately daily to collect data over a range of recoveries spanning from 35-60%. For the low pressure membrane tests, the SWRO system operated in the balanced PX flow regime (Section 4.5).

For the high recovery tests using the unbalanced flow regime, the multi-point testing was performed at a flux of 7.5 and 9.0 gfd (306 and 367 $L/m^2/d$). Under this flow regime, the SWRO system was operating as a brine recirculation process.

Upon completion of the tests, data was analyzed and a net present value analysis was conducted (See Section 5.3) to determine which test condition(s) resulted in the most cost effective operating point(s) known as the most affordable points (MAP). At the end of the 12-point matrix testing and at the end of the 2-3 week MAP testing, the base line conditions of 42.5% recovery and 7.5 gfd were retested to confirm that membrane and system performance had remained stable from the first two weeks of testing.

5.3 Net Present Value (NPV) Cost Analysis

A present value analysis model, which accounts for both capital and operating costs, was developed and used to establish the MAP. The present value analysis is conducted at the completion of the membrane/system recovery variation tests. The assumptions for the present value analysis model are established as part of the testing protocol and are presented in Table 5.4.

Capital costs are determined under the assumption that the SWRO facilities would be co-located with a power plant. Therefore, the capital costs developed do not include any new intake or outfall facilities. Pretreatment was considered similar to the demonstration scale test equipment, however, media filters were estimated in accordance with the deep bed filter concepts use for the Point Lisas SWRO facility in Trinidad (i.e., 4 gpm/ft^2, 5-ft anthracite, 2.5-ft sand, 2-ft garnet) [3,4]. Such a design has demonstrated to be more compatible with challenging raw water qualities (i.e., than the ADC's demonstration scale media filters), such as those associated with red tide events.

Table 5.4 NPV Model Assumptions for 50 MGD SWRO Plant

Plant Capacity	50 MGD	**High Service Pump TDH**	200 ft H_2O (61 m)
Plant Average Demand	95% of Plant Capacity	**Intake/High Service Pump Eff.**	80%
Plant Utilization Factor	95%	**Intake/High Service Pump Motor Eff.**	95%
Capital Cost [1]	Determined with WTCOST Model and Manufacturer Quotes	**RO Process Energy Demand**	Study data[2]
		RO Membrane Life	Refer to **Table 5.5**
		RO Membrane Element Cost	$550
Electrical Systems	12% of Capital Cost	**RO Pressure Vessel** [3]	$8547
Instrumentation & Control	10% of Capital Cost	**Sodium Hypochlorite Dose (pretreatment)**	2 mg/L
Project Life	30 years	**Sodium Hypochlorite Cost**	$1.2/lb ($0.54/kg)
Bond Payment Period	30 years	**Sodium Bisulfite Dose**	4.6 mg/L
Interest	5%	**Sodium Bisulfite Cost**	$0.3/lb ($0.14/kg)
Construction Contingencies	15% of capital cost	**Cartridge Filter Loading Rate**	4 gpm/10-in
Contractor OH&P	10% of capital cost	**Cartridge Filter Cost**	$20/40-in filter
Engineering & Const. Mgmt.	25% of capital cost	**Cartridge Filter Life**	1000 hours
Permitting Cost	$10-million	**Carbon Dioxide Dose**	16 mg/L
Annual Maintenance Costs	1.5% of capital cost	**Carbon Dioxide Cost**	$0.04/lb ($0.02/kg)
Labor	25 operators @ $96,250/yr ea.	**Lime Dose**	44 mg/L
Energy Costs	$0.11 per kW-hr	**Lime Cost**	$0.05/lb ($0.02/kg)
Intake Pump TDH	200 ft H_2O (61 m)	**Sodium Hypochlorite Dose (finished water)**	1.5 mg/L

Note: O&M does not include administrative, laboratory, legal, reporting, and management fees since these costs vary widely.

1 Includes intake pump station, prechlorination/dechlorination systems, ferric chloride systems, media filtration, media filter backwash system, filtered water lift station, cartridge filters, SWRO equipment, RO bldg., permeate flush system, clean-in-place system, transfer pump station, process piping, yard piping, lime system, carbon dioxide system, chlorination system, high service pump station, site work.

2 Energy meter readings

3 Installed, includes all ancillary piping, frames and fittings.

4 Land costs and Inflation are not included in the Present Value Analysis

5 WTCOST is a Water Treatment Cost Estimation Program developed by the United States Bureau of Reclamation and can be found at www.usbr.gov/pmts/water/media/spreadsheets/WaTER.xls.

Table 5.5 establishes the expected membrane life with respect to recovery. The expected membrane life is used to estimate membrane replacement cost. Membrane replacement resulting from warranty maintenance by the manufacturer was not part of the replacement cost.

Table 5.5 Estimated RO membrane life.

		Membrane Life (Years)	
RO Recovery %	**System Recovery %**	**7.5 gfd**	**9.0 gfd**
40	40	6.25	5.00
	45	6.25	5.00
	50	6.00	4.80
	55	5.75	4.60
	60	5.50	4.40
45	45	5.75	4.60
	50	5.75	4.60
	55	5.50	4.40
	60	5.25	4.20
	65	5.00	4.00
50	50	5.25	4.20
	55	4.75	3.80
	60	4.50	3.60
55	55	4.75	3.80
	60	4.50	3.60

Note:

1. 7.5 gfd is equivalent to 306 $L/m^2/d$
2. 9.0 gfd is equivalent to 367 $L/m^2/d$

The ADC demonstration plant employs a David Brown Union TD-60 positive displacement main high-pressure pump that operates at very high efficiencies of 88-90%. Although positive displacement plunger pumps operate at a high efficiency, it is not practical to employ the technology to very large systems because of their high maintenance requirements and pulsating flows. For large treatment plants, centrifugal pumps with efficiencies between 55-89% are used. The achievable efficiency of a centrifugal pump depends on the size or flow rate of the pump, where lower flows typically will operate at lower efficiency compared to the larger pumps.

Table 5.6 is an example using the standard ADC II membrane tests that projects the total energy consumption of various system capacities. A 0.3 MGD (1136 m3/d) system that employs a 69% efficient centrifugal main high pressure pump and 70% efficient intake and pre-filtration pumps to be 15.0 kWh/kgal (3.96 kWh/m3). By contrast, the 50 MGD projections use an efficiency of 89% for the main high-pressure pump and 80% for the intake and pre-filtration pumps. In addition, the motors and control systems are generally more efficient for the largest systems resulting in a projected total treatment energy of 11.3 kWh/kgal (2.98 kWh/m^3).

Table 5.6 ADC energy consumption at MAP and projected energy consumption at larger plant capacities.

	Projected energy consumption of various system capacities			
Treatment Step	**ADC II MAP from Std Tests**	**0.3 MGD (1136 m^3/day) [2]**	**10 MGD (37854 m^3/day)[2]**	**50 MGD (189271 m^3/day) [2]**
RO Process	7.6 / 2.00 [1]	10.5 / 2.80	8.6 / 2.27	7.6 / 2.00
Intake [2]	2.19 / 0.58	2.01 / 0.53	1.74 / 0.46	1.72 / 0.45
Pre-filtration [2]	1.15 / 0.30	1.06 / 0.28	0.91 / 0.24	0.90 / 0.24
Permeate treatment [2]	0.25 / 0.07	0.23 / 0.06	0.17 / 0.04	0.16 / 0.04
Permeate distribution [2]	1.27 / 0.33	1.17 / 0.31	0.86 / 0.23	0.85 / 0.22
Total Treatment	12.4 / 3.27	15.0 / 3.96	12.3 / 3.25	11.3 / 2.98

Notes:
1. MAP average value from 7 membrane tests.
2. Projected values based on typical parameters and conditions.
3. Units for the table are in kWh/kgal / kWh/m^3

6.0 Results and Discussion

The Results and Discussion for this report is organized as follows:

- Section 6.1: The raw water salinity, boron concentration, and turbidity data are summarized for the ADC I and ADC II test duration.
- Section 6.2: The pretreatment system performance, including media filtration from ADC I, GE Zenon ZeeWeed 1000 UF system, and Amiad's AMF system is summarized and compared. For the UF system, membrane performance in regards to flux and transmembrane pressure is presented.
- Section 6.3: The low energy membrane performances for all tested manufacturers and the associated energy consumption and cost analysis are presented. The most affordable point is derived from the respective cost comparisons.
- Section 6.4: Innovative flow configurations on the pressure exchanger to enhance overall recovery is discussed. Membrane performance, energy consumption, and cost analysis of the resulting high recovery operation are presented.

6.1 Raw Water Characterization

Raw feed water was taken from an open intake at the end of a pier located in the Port Hueneme shipping channel feed by the Pacific Ocean (Figure 6.1).

Figure 6.1 Raw water intake at Port Hueneme.

Feed water quality is summarized in Table 6.1.

Table 6.1 SWRO raw water quality during ADC I and II testing

		During Unbalanced Test		During All Testing	
Parameter	**Location**	**Mean**	**Range**	**Mean**	**Range**
TDS (mg/L)	Raw	31,900	31,400 – 33,300	34,000	31,400 – 36,300
Temperature (^{o}C)	Raw	15	13 – 18	15	12 – 20
Boron (mg/L)	Raw	5.1	4.5 – 5.8	4.8	3.9 – 6.1
Turbidity (NTU)	Raw	2.3	0.0 - 6.6	1.6	0.25 – 12
Turbidity (NTU)	RO Feed	0.03	0.02 - 0.06	0.06	0.02 – 0.25
SDI – from Cartridge Filter	RO Feed	2.6	1.7 – 4.3	3.5	1.2 – 11.4

Note:
SDI – Silt Density Index
Raw water is sea water
RO Feed is the filtrate after pretreatment that enters the RO system

Salinity, boron, and temperature are shown in Figure 6.2 and Figure 6.3, respectively. It should be noted that once through cooling applications (SWRO intake using co-located power plant intake) would have higher temperatures, which would lead to different permeate qualities and possibly lower energy consumptions than those reported by the ADC. Note that this open intake is under the influence of storm events, vessel traffic, and red tide.

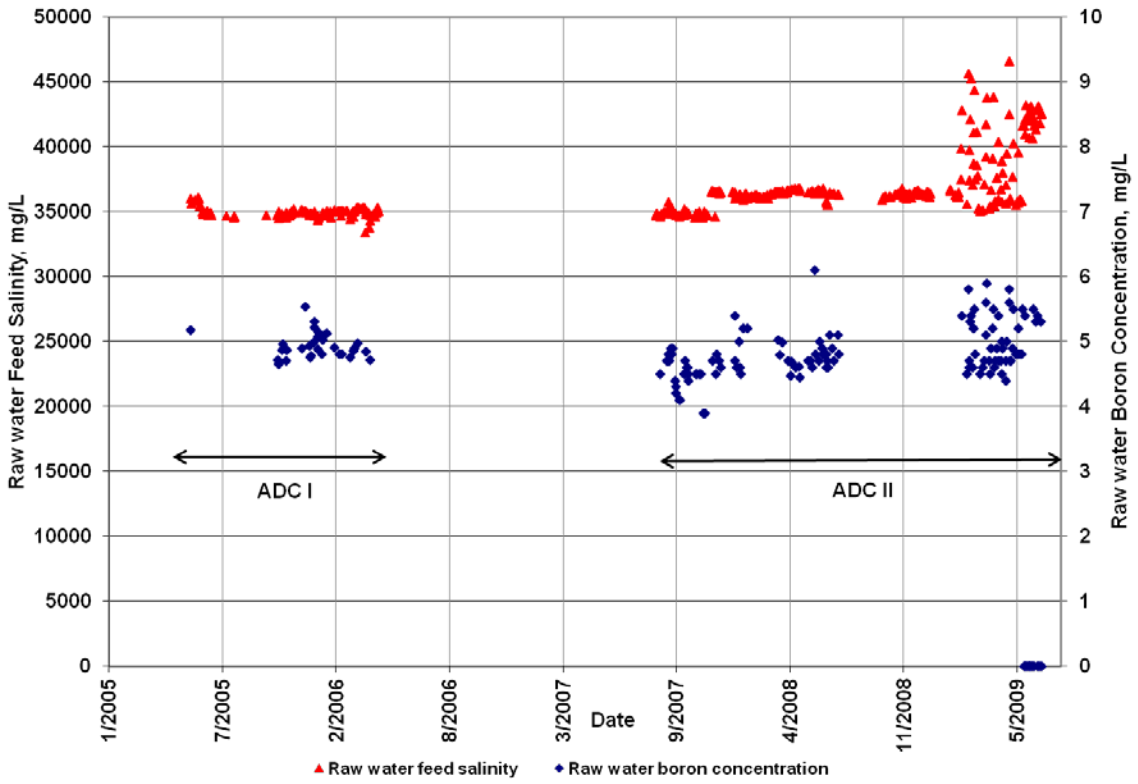

Figure 6.2 Raw (sea) water feed salinity and boron concentration

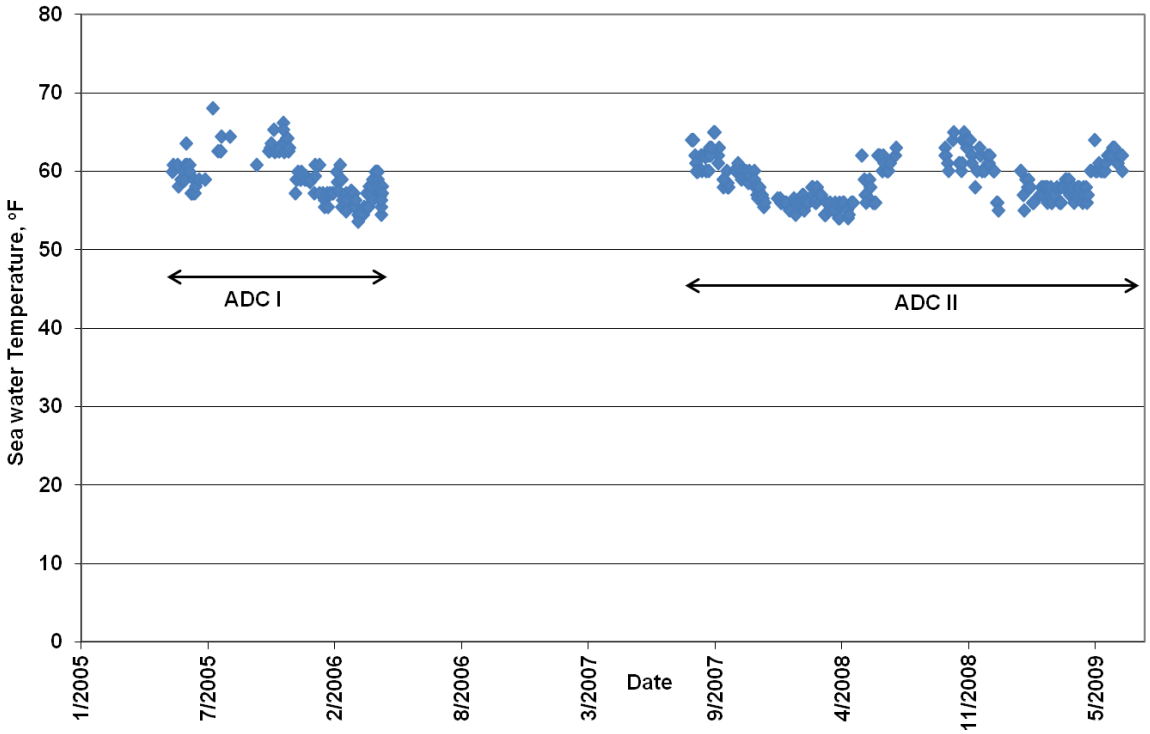

Figure 6.3 Sea Water Temperature

6.2 Pretreatment System Performance

In open seawater intakes, reverse osmosis membranes are sensitive to different types of pollution: particles, precipitated metals, organic matters and hydrocarbons, etc. The pretreatment must be designed to face the worst water quality, providing consistently good RO feed water. From May 2005 to June 2008, media filtration was the pretreatment system employed during the ADC I (May 2005 - April 2006) and ADC II (August 2007 - November 2009) testing. In June 2008, GE Zenon ZeeWeed 1000 replaced media filters as the pretreatment of choice. Amiad's Micro Fibre Prefiltration was tested independently from April 2009 to November 2009. The following sub-section elaborates the detailed performance for each of the pretreatment technologies tested during ADC I and II.

6.2.1 Multimedia Filter Performance

Multimedia filtration was employed in ADC I from May 2005 to April 2006, and also in the beginning of ADC II from August 2007 to June 2008, as seen in Figure 6.4. During these test periods, raw water (seawater) turbidity ranged from 0.1 to 10 NTU, and the media filters were able to decrease the effluent turbidity to an average of 0.06 NTU. Overall, the media filters were able to reduce the influent turbidity by 94%. Post-media filtrate SDI were mostly below 5 in ADC I and ADC II, with intermittent spikes up to 8. The frequent occurrence of the filtrate SDI above 5 suggested that multimedia filtration could not produce a consistent feed water quality that is acceptable for downstream SWRO.

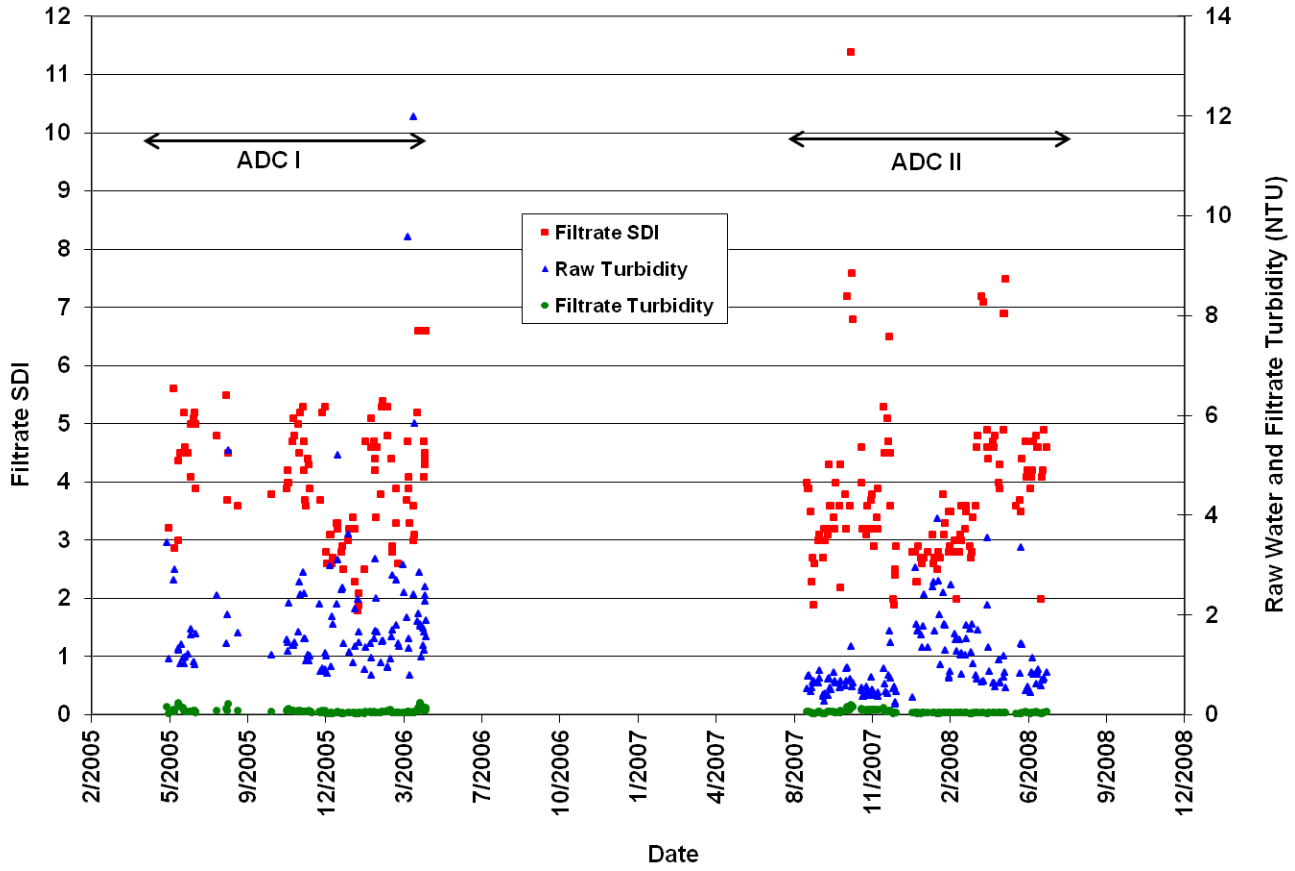

Figure 6.4 Multi-media filter performance: Raw Water turbidity, filtrate turbidity and SDI

It should be noted that in the summer of 2005, Southern California experienced localized and prolonged periods of red tides and extensive algae blooms. Red tides tend to occur most frequently in the spring and fall months and average 1-2 weeks in duration. Summer 2005 was recognized as an anomalous period and stressed the media filtration system in ADC I. In contrast, since the start of ADC II from August-2007 until July-2008 the ADC has experienced approximately 8 discrete days in which satisfactory water quality could not be achieved using the basic multi-media system. In full-scale applications, designs that are more robust would be applied to ensure that water quality and continuous operation could be maintained through the challenging but brief events that occur in Southern California coastal waters.

6.2.2 GE Zenon ZeeWeed 1000

Ultrafiltration (UF) is a low-pressure membrane filtration process primarily used for particle removal. UF have been installed as an alternative to pressure or gravity sand filtration in conventional treatment plants, or as pretreatment to processes such as RO. In the second half of ADC II, GE Zenon ZeeWeed 1000 UF system was tested as an alternate pretreatment method for the SWRO process. The UF system included two 3 mm strainers, followed by a submerged UF system operating at 20 gfd (815 L/m^2/d), and a 5 micron cartridge filtration. Testing began in late June 2008, and continued until the end of ADC II testing, which ended in November 2009.

As seen in Figure 6.5., the filtrate turbidity was typically 0.06 NTU and below, which accounted for 97 % reduction of turbidity from the influent. The filtrate SDI never exceeded 5, against rain events and fluctuations in the influent water quality. Cartridge differential pressures following the UF system were typically flat for the first month of operation, and then began to rise at a variable rate to the maximum of 15 to 20 psi (103-138 kPa) before replacement.

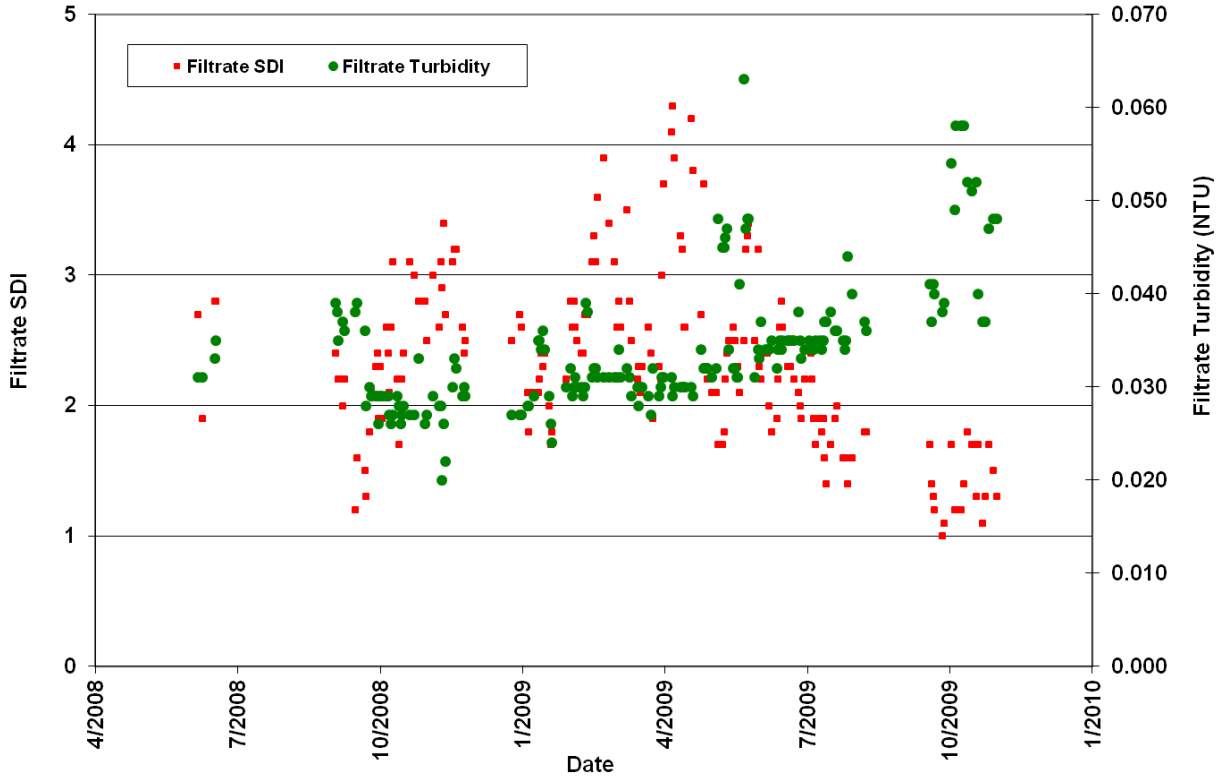

Figure 6.5 GE Zenon ZeeWeed 1000 UF Performance: Filtrate turbidity and SDI

Figure 6.6 shows the normalized flux in units of gallon per feet per day (gfd) and the transmembrane pressure in units of pounds per square inch (psi) of the UF membrane performance. Flux across membranes is dependent on temperature of the water; higher feed temperature will result in high flux. To evaluate the membrane performance without the complication of temperature variation during the test period, the flux is normalized against a standard temperature of 20°C. Transmembrane pressure (TMP) refers to the vacuum required to pull clean water through the membrane. The ZeeWeed® 1000 system is designed to maintain a constant flux. As the membrane becomes fouled, the transmembrane pressure increases. A citric acid cleaning is typically required once the transmembrane pressure reaches approximately 10-13 psi.

From late April 2009 to November 2009, the feed flow to the pretreatment system was split between the GE Zenon ZeeWeed 1000 UF System and the Amiad AMF System. Due to the decrease in feed flow to the UF system while maintaining the same membrane area, flux was reduced by half.

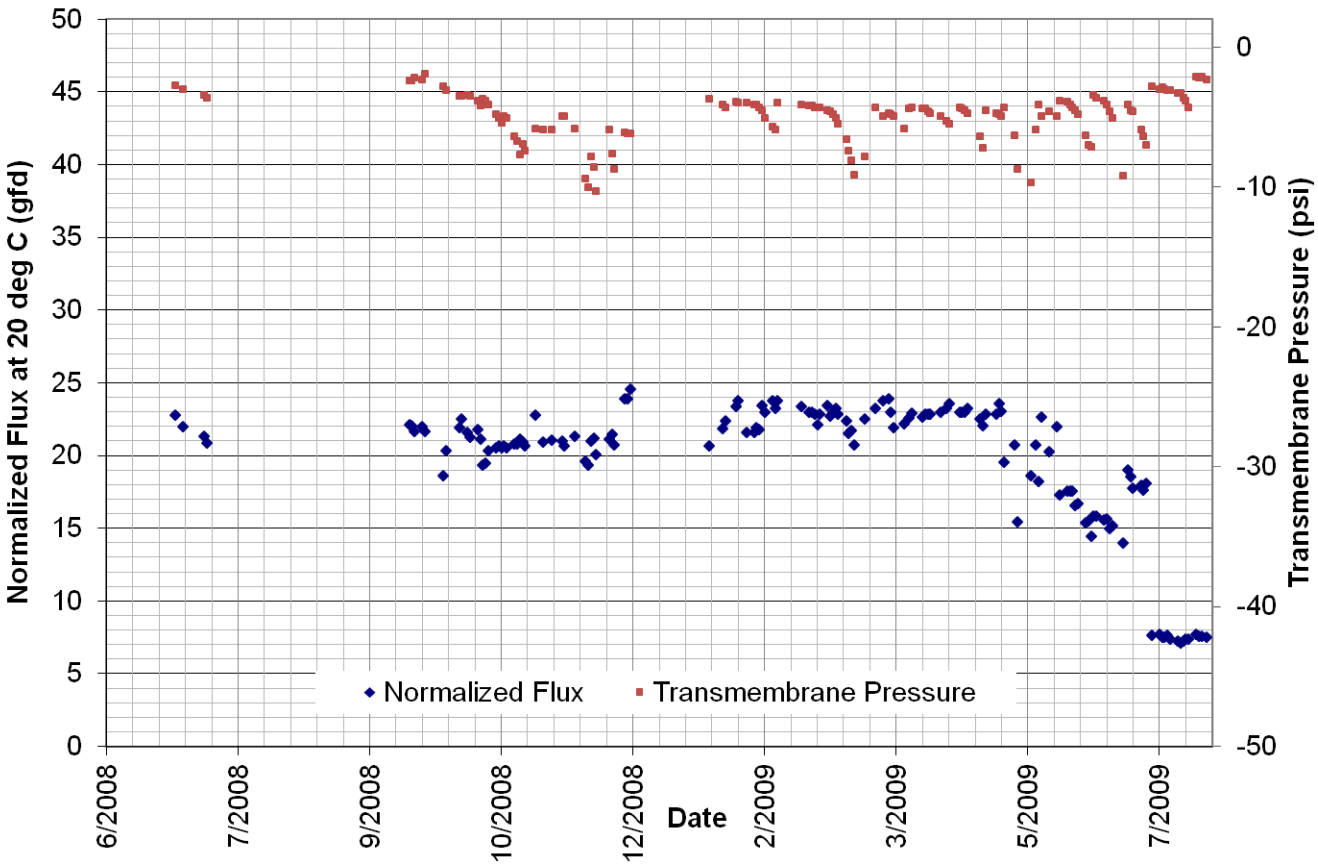

Figure 6.6 GE Zenon ZeeWeed 1000 UF Performance: Normalized flux and Transmembrane Pressure (TMP).

6.2.3 Amiad Automatic Micro Fiber (AMF) Pre-filtration

Amiad's AMF Pre-filtration system was tested independently from April 2009 to November 2009. Figure 6.7 summarizes the filtrate turbidity and SDI results from testing the 2, 3 and 10 micron filters. Filtrate turbidity, while higher than the media filters and the UF system, was consistently below 0.2 NTU. Filtrate SDI values for the AMF system were consistently between 4-6, which were higher than recommended for the downstream RO feed (SDI < 5). Figure 6.8 shows the pressure readings for the inlet and outlet, and also the differential during the test period. Despite the fluctuations in feed water quality from an open channel intake, the filters maintained a differential of less than 10 psi and operating pressures were less than 45 psi. Despite the higher turbidity and SDI values, Amiad's self-cleaning filter feature without the use of chemicals can be beneficial in cases where the feed water fluctuations are kept to a minimum, i.e., beach wells or submerged intakes.

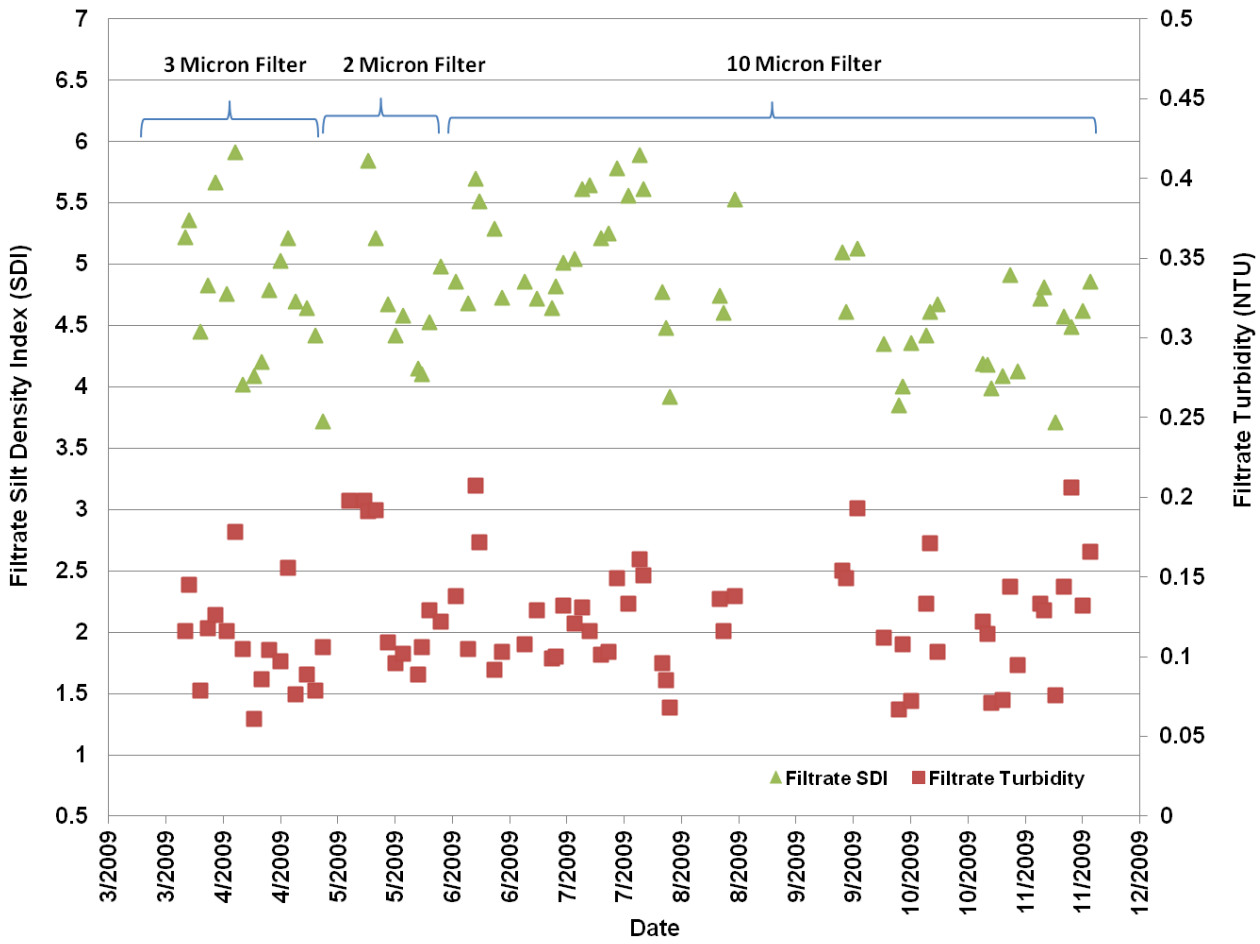

Figure 6.7 Amiad AMF Performance: Filtrate Turbidty and SDI

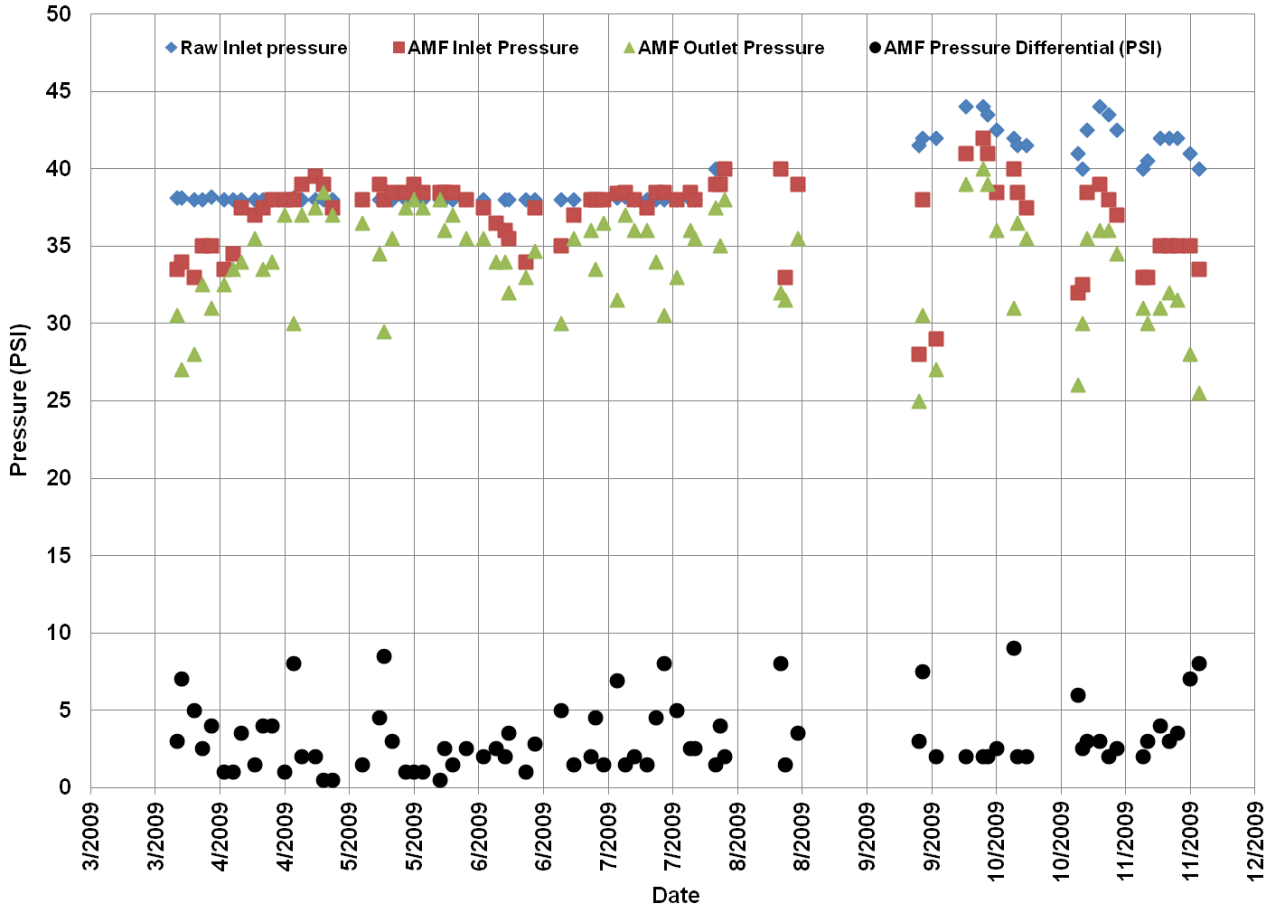

Figure 6.8 Amiad AMF Performance: Inlet/Outlet Pressures and Pressure Differential

6.3 Low Energy Membranes and Staged Membrane

Over a period of three years, the ADC tested seven different membrane sets as outlined in Table 5.2. In ADC I, three low-energy membranes from DOW Filmtec were tested. In ADC II, membranes from Koch Membranes, Toray, and Hydranautics were tested to validate that low energy consumption from the SWRO-PX process can be achieved regardless of commercial membrane suppliers. Furthermore, the ADC was able to provide a general matrix of performance, using natural Southern California seawater in a full-scale configuration, showing energy consumption, salt and boron rejection from four leading membrane manufacturers. It should be noted that membrane testing was not performed in parallel, and that there were variations in feed water quality to the SWRO unit in the course of testing.

6.3.1 Membrane Performance

RO permeate salinity goal of less than 500 mg/L TDS was achieved for all tested membranes at various fluxes, as seen in Figure 6.9 to Figure 6.11. Figures 6.12 to 6.14 display the permeate boron results of the test runs at 6, 7.5 and 9 gfd, respectively. In membrane processes, as flux across the membrane increases, permeate TDS and boron concentrations decrease. Salt passage through the membrane is independent of water passage, and when the water flux

increases, the salt concentration on the permeate side of the membrane effectively decreases. At the same RO recovery, this phenomena can be seen in the permeate TDS for Figures 6.9 to 6.11, which represent the results at 6, 7.5 and 9 gfd, respectively.

At constant flux, when the RO recovery increases, the average feed TDS of the system increases, which leads to a high concentration gradient across the membrane and results in higher salt passage. Overall, for a given membrane:

- Rate of water flow through a membrane is proportional to net driving pressure (NDP) across the membrane.
- Rate of salt flow is proportional to the concentration differential across the membrane and is independent of applied pressure.

From the results presented in Figure 6.12 to Figure 6.14, it can be seen that when recovery increases, the salt passage increases at a given flux rate. Overall, the low energy membrane elements (DOW Filmtec SW30XLE-400i, DOW Filmtec ISD Hybrid, and Koch TFC 2822HF-400) demonstrated the ability to produce acceptable permeate quality with respect to TDS and boron. Permeate TDS from the higher rejection membrane models (DOW Filmtec SW30HR-380, DOW Filmtec SW30HRLE-400i, Toray TM800E-400 and Hydranautics SWC 5) were half the permeate TDS of the low energy membranes. The higher rejection membranes produced better permeate quality but at the expense of higher energy consumption, which will be discussed in Section 6.3.2. Hydranautics SWC5, which is considered a high rejection membrane, demonstrated the best water quality but still maintained relatively low to mid range energy consumption.

As seen in Figure 6.9 to Figure 6.14, the low energy membranes (DOW Filmtec SW30XLE-400i, DOW Filmtec ISD Hybrid and Koch TFC 2822HF-400,) could not meet the ADC Most Affordable Point (MAP) water quality goals of less than 200 mg/L TDS and less than 1.045 mg/L of Boron concentration. In these instances, it should be noted that if the ADC test had been fed a higher temperature seawater, more typical of a co-located SWRO plant taking warm water from a once-through cooling power plant, the low energy membranes may not even meet the potable water standards of 500 mg/L TDS and the California Boron limit of 1.45 mg/L. Higher feed water temperatures to the RO system tends to lead to higher salt passage through the membrane. Further testing is needed to quantify the true impact of temperature variations on these results.

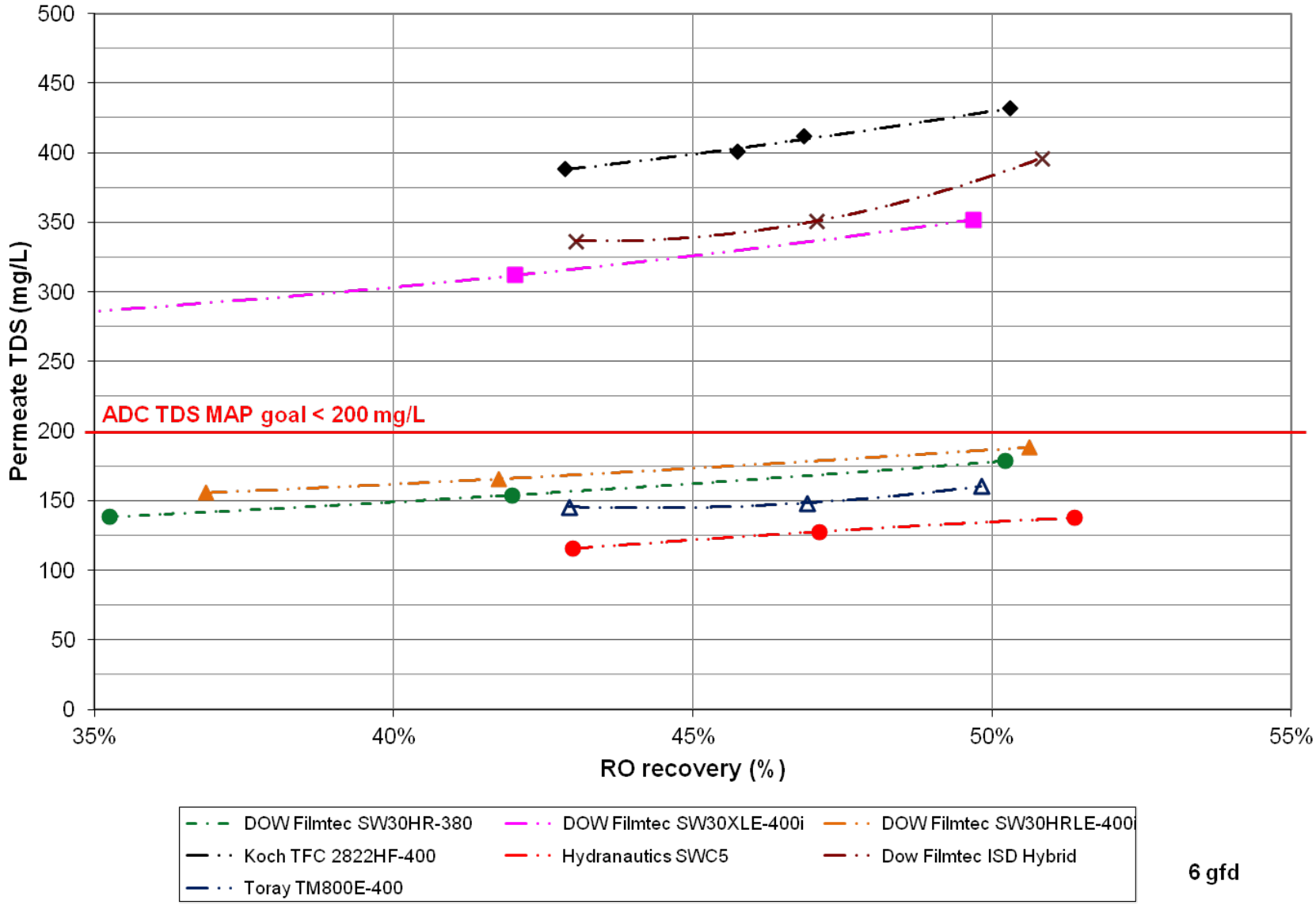

Figure 6.9 Low Energy Membrane Performance at Various Recoveries: Permeate TDS at 6 gfd

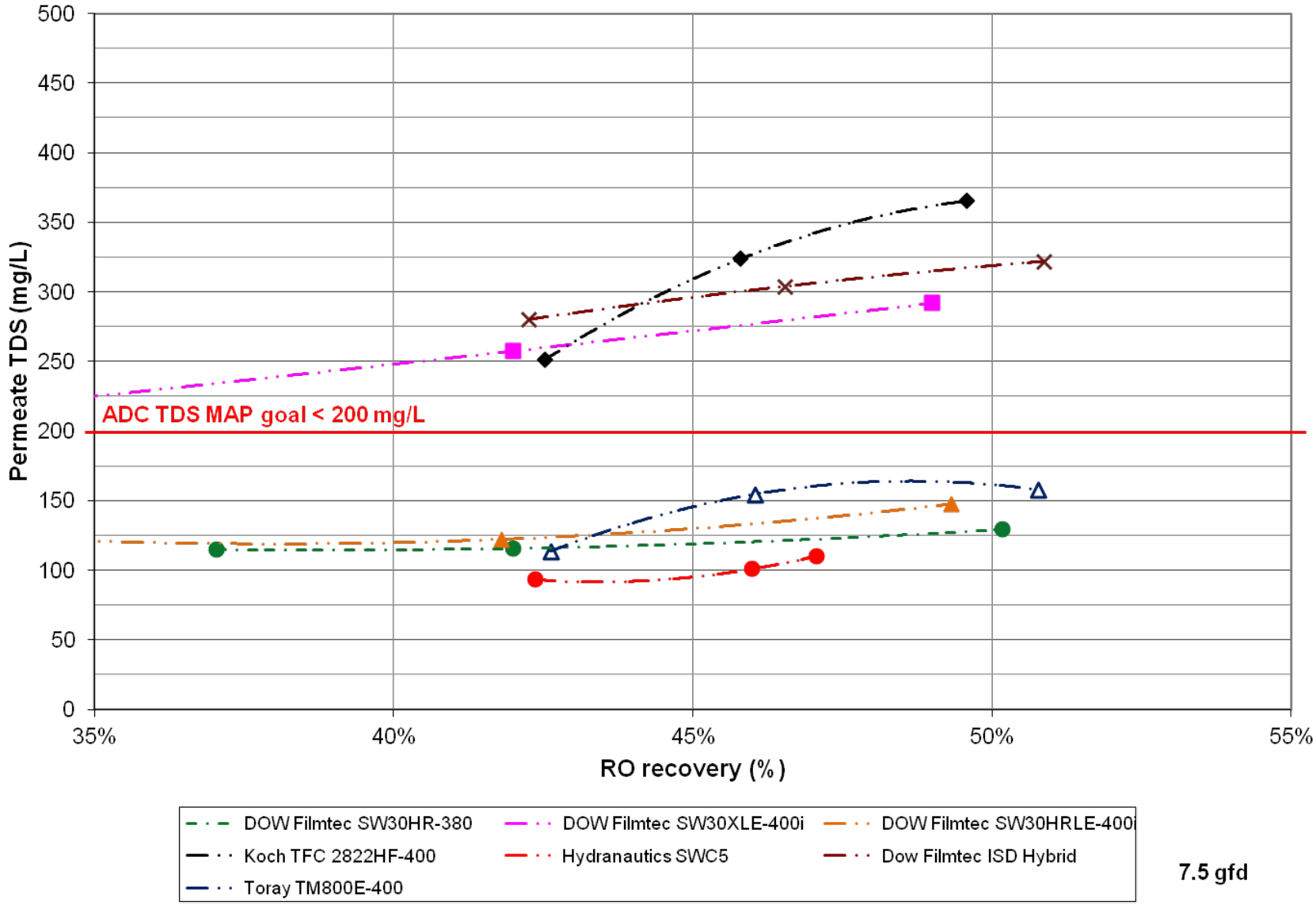

Figure 6.10 Low Energy Membrane Performance at Various Recoveries: Permeate TDS at 7.5 gfd

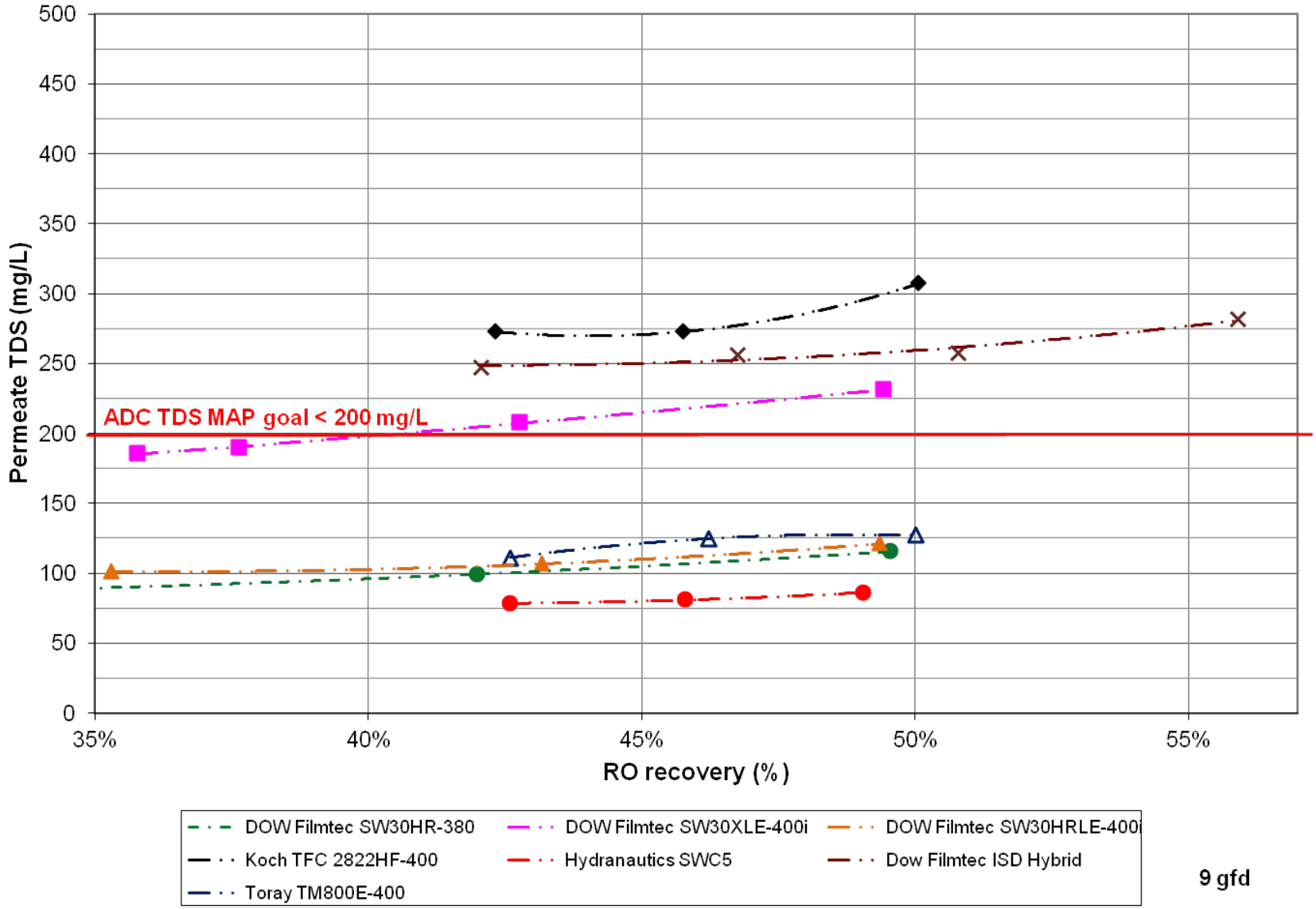

Figure 6.11 Low Energy Membrane Performance at Various Recoveries: Permeate TDS at 9 gfd

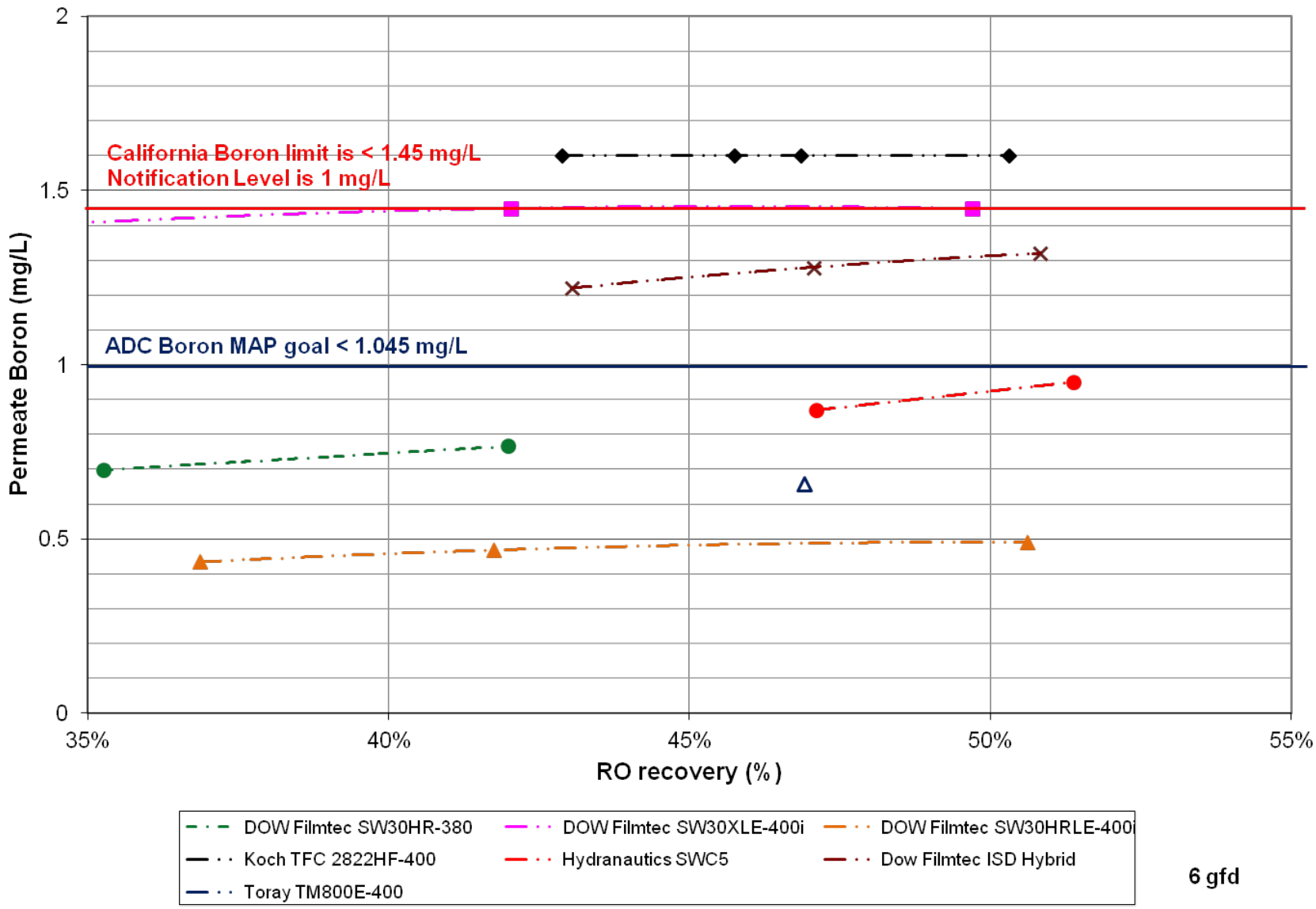

Figure 6.12 Low Energy Membrane Performance at Various Recoveries: Permeate Boron at 6 gfd

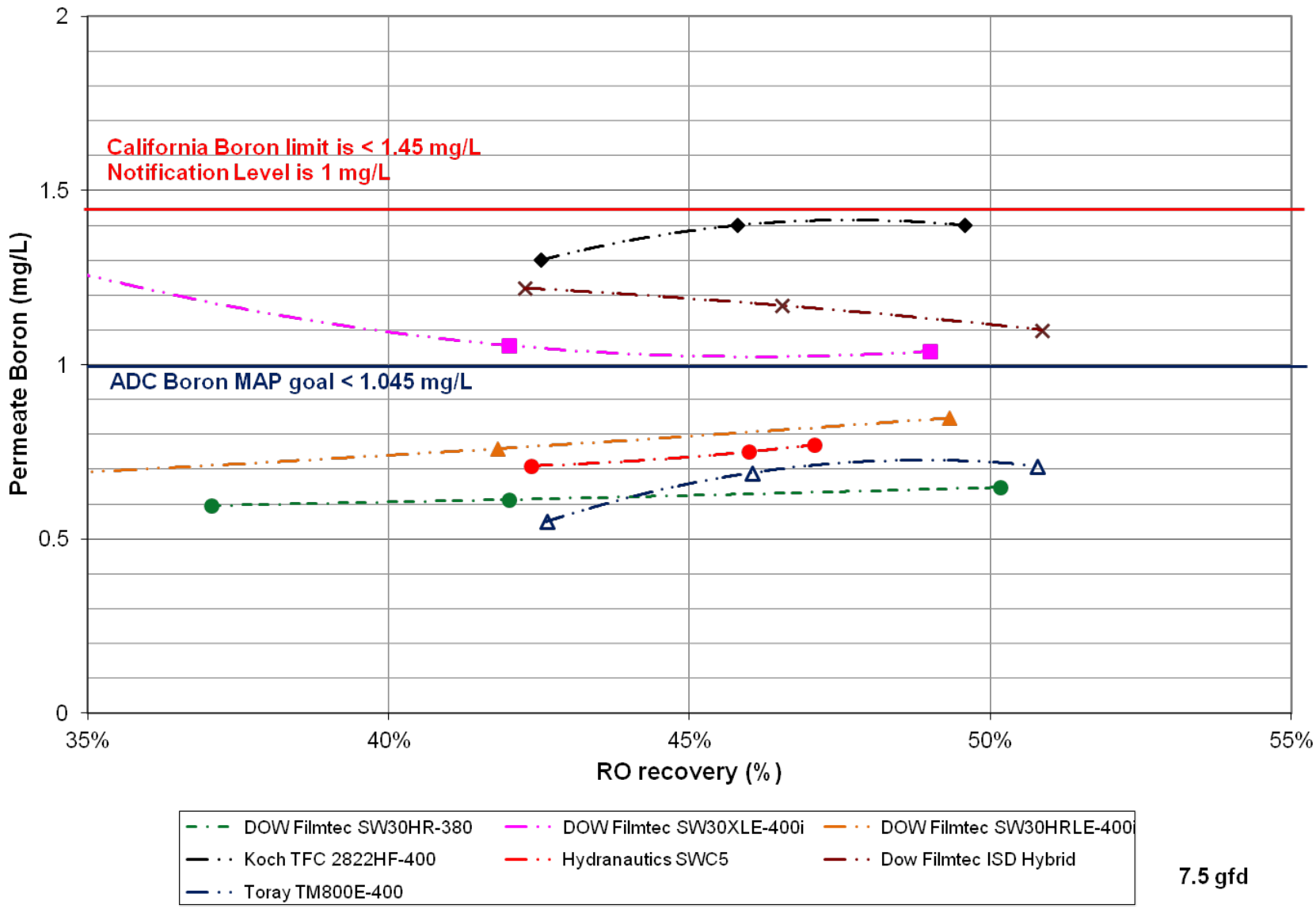

Figure 6.13 Low Energy Membrane Performance at Various Recoveries: Permeate Boron at 7.5 gfd

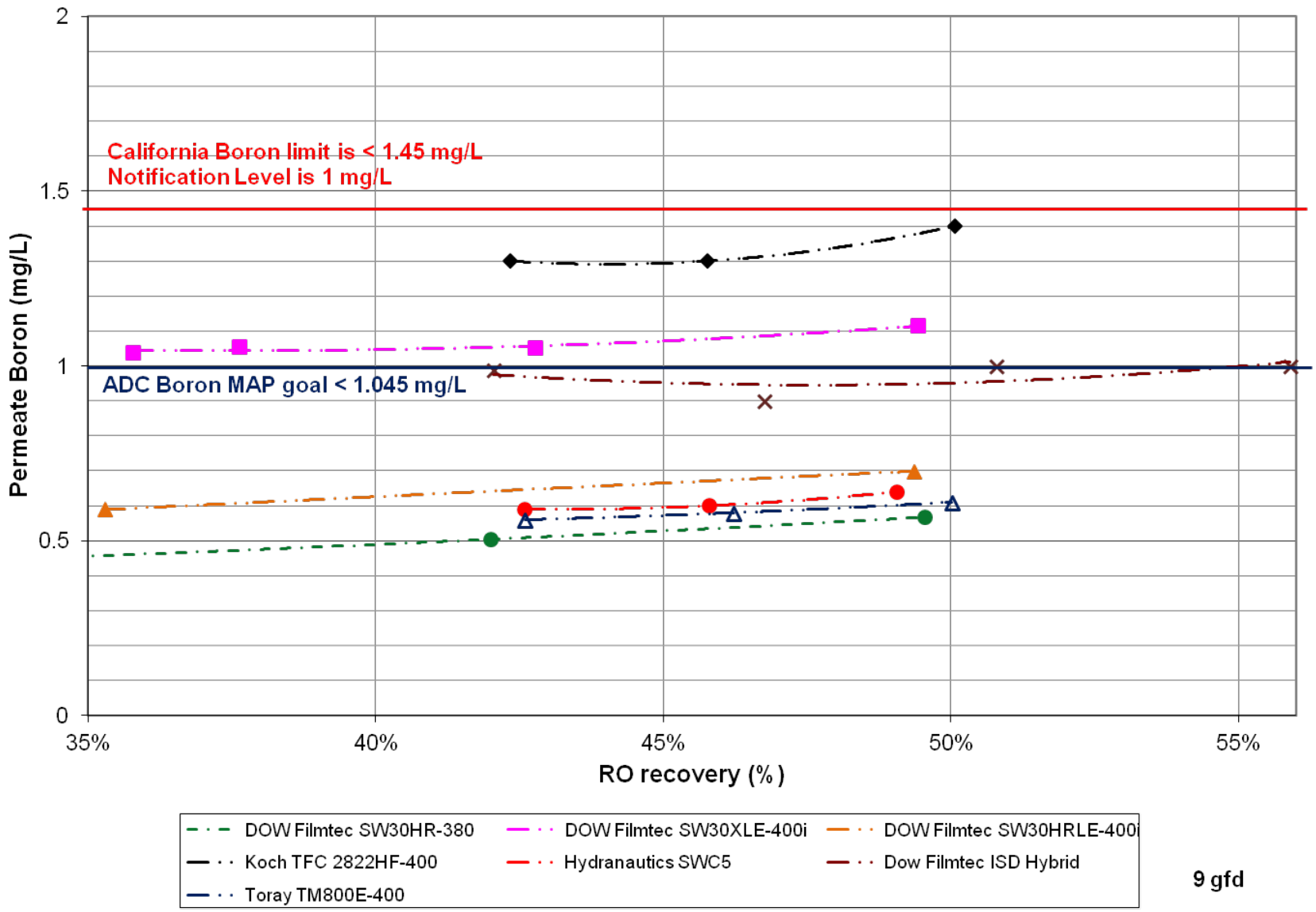

Figure 6.14 Low Energy Membrane Performance at Various Recoveries: Permeate Boron at 9 gfd

6.3.2 Energy Consumption

The ADC's demonstration scale plant used off-the-self, state-of-the-art pumps and energy recovery technology that are comparable in efficiency and energy consumption to the largest plants being designed today (i.e., approximately 50 million gallons per day (mgd)) or 190,000 m^3/day). Consequently, the energy consumption for a 50 mgd facility will be inferred from ADC's SWRO specific energy test results.

As discussed in Section 4.3, the energy consumption for the ADC SWRO system is expressed as SWRO Specific Energy in units of kWh/m^3 or kWh/kgal. The SWRO Specific Energy is the sum of the high-pressure pump and booster pump consumption. Total Treatment Energy is the sum of SWRO specific energy, and the energy consumption accounted for intake, pretreatment, conveyance and distribution of the entire facility. The energy consumption for a 50 mgd facility is shown in Figure 6.15, Figure 6.16, and Figure 6.17, for the 6, 7.5, and 9 gfd flux tests, respectively. SWRO specific energy is represented on the bottom half of the figures. The top half of the figures represents the total treatment energy for a 50 mgd facility.

As indicated in Figure 6.15 to 6.17, low energy membrane elements (DOW Filmtec SW30XLE-400i, DOW Filmtec ISD Hybrid and Koch TFC 2822HF-400) required less energy than the other membranes, but at the expense of permeate quality. The tested membrane with lowest energy consumption was achieved with the DOW Filmtec SW30XLE-400i at 6 kWh/kgal (1.58 kWh/m^3), when the system operated at 6 gfd and 42% RO recovery.

Though SWRO process specific energy generally increases with recovery, the total energy required for treatment decreases with increasing recovery. This is due to the increased volume of raw water that must be pumped and treated at lower recovery rates to obtain the same volume of permeate. Therefore, the specific energy data that are presented in the figures show the importance of analyzing a facility process in its entirety, and not just the SWRO specific energy. From a total treatment energy perspective, it appears that regardless of flux, the lowest energy consumptions were determined to be at a RO recovery range between 42 to 46 percent. However, this recovery range is dictated by local raw water quality and onsite pretreatment technology and is only specific to the results obtained at the Port Hueneme test site.

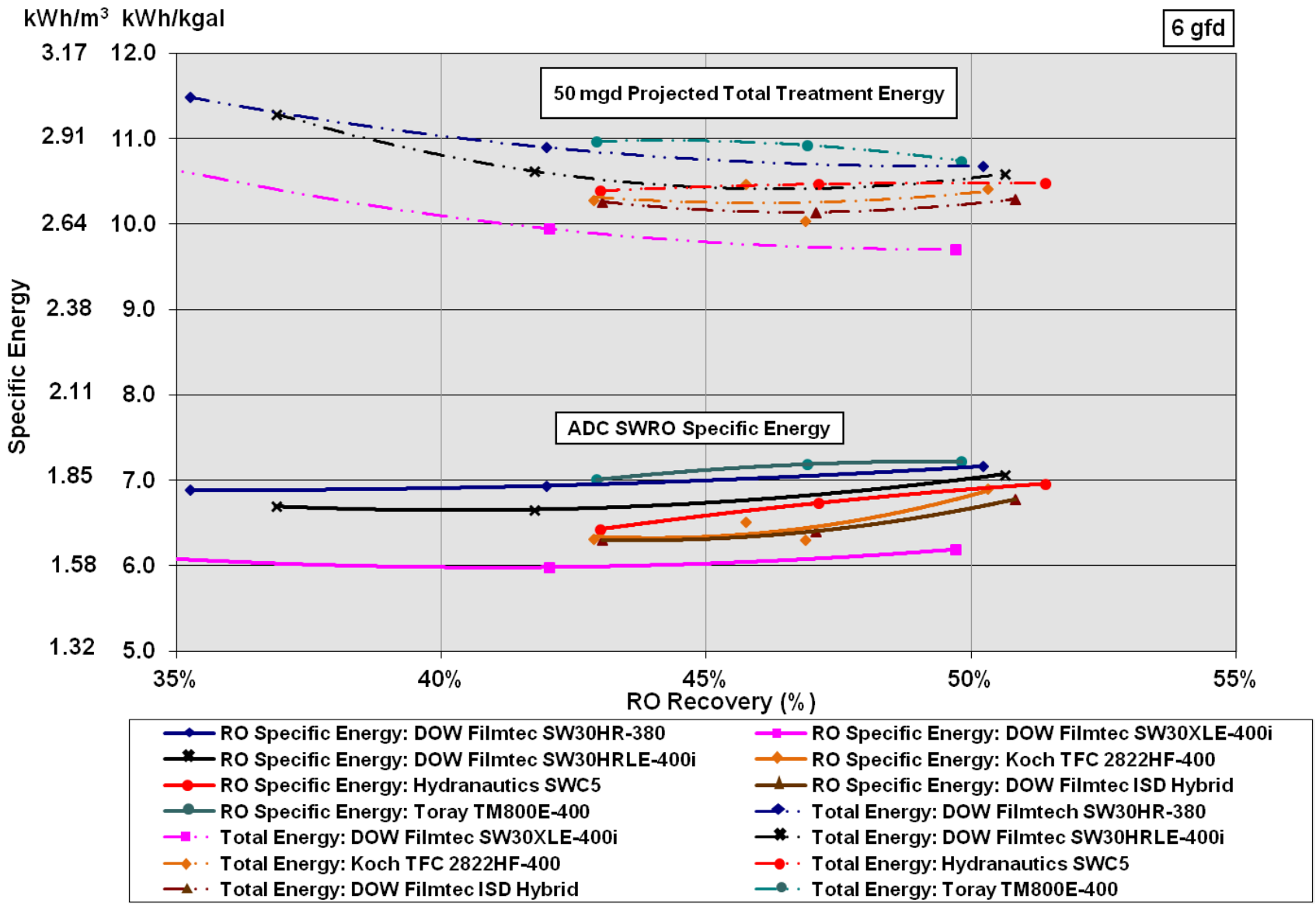

Figure 6.15 Energy consumption for the low energy membranes across various RO recoveries at 6 gfd

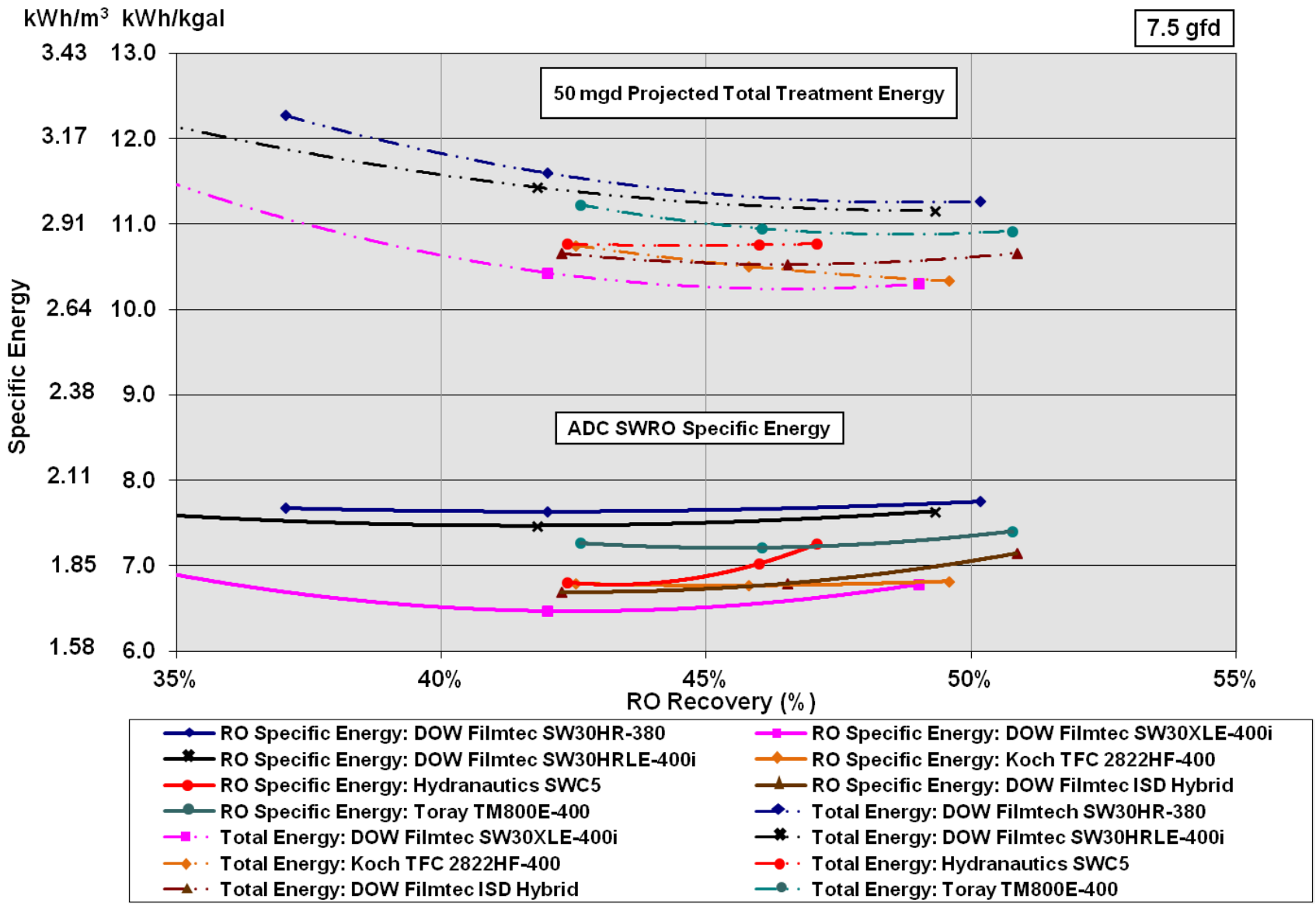

Figure 6.16 Energy consumption for the low energy membranes across various RO recoveries at 7.5 gfd

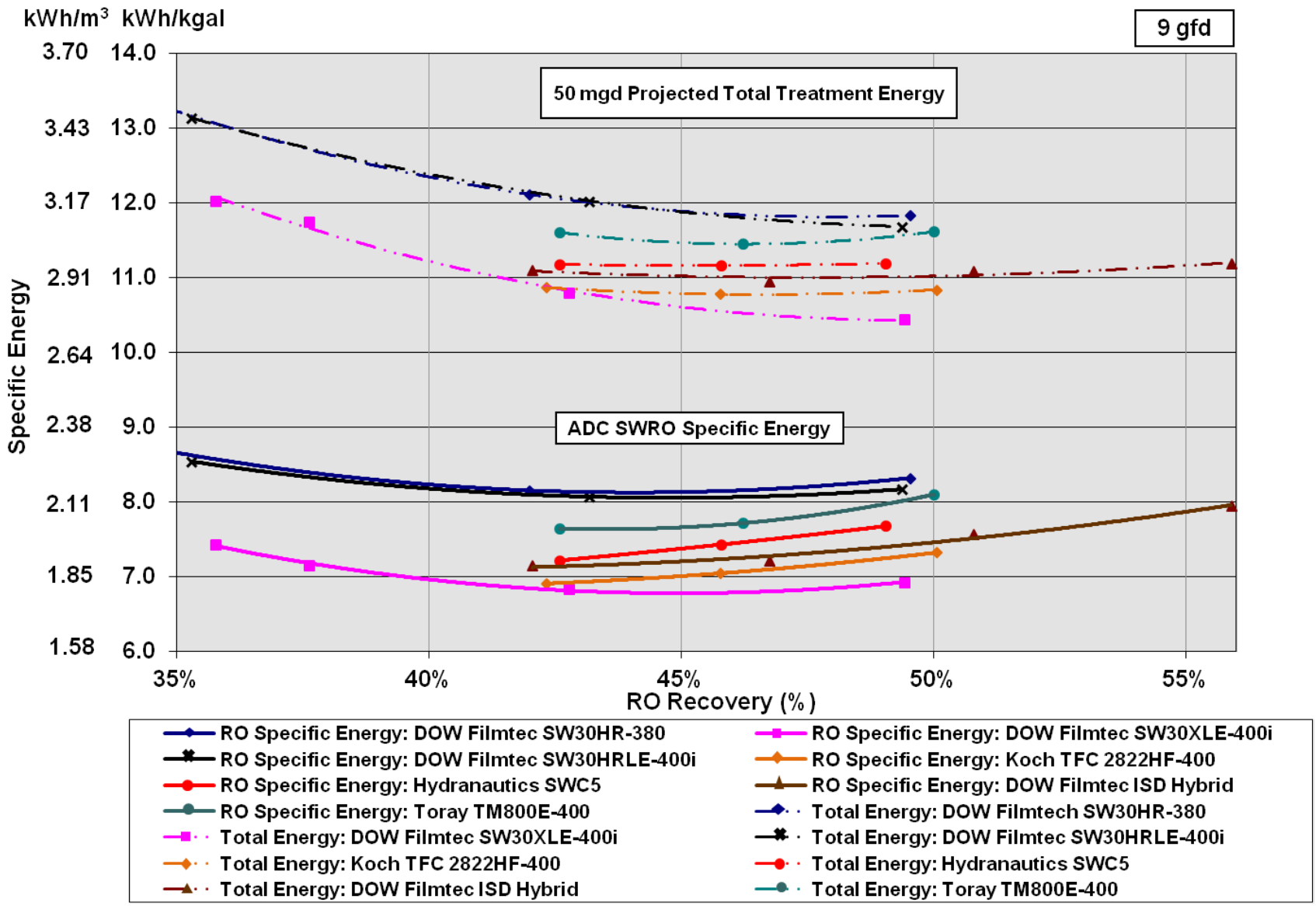

Figure 6.17 Energy consumption for the low energy membranes across various RO recoveries at 9 gfd

6.3.3 Cost and Most Affordable Point (MAP) Analysis

Following each set of membrane tests, the SWRO specific energy and total treatment energy values were input into a NPV cost analysis model assuming a 50 mgd facility capacity. The assumptions for capital costs and operation and maintenance (O&M) costs were listed in Table 5.4. The annual cost (capital + O&M) at each recovery and flux was divided by the capacity and 95% plant utilization factor to calculate the treatment cost, expressed in units of $/kgal. For each membrane, the lowest treatment cost across all tested conditions was selected as the most affordable point (MAP), and the membrane was re-run at the MAP for another 2 weeks to demonstrate system reproducibility. The ADC also considered a specific set of water quality goals of TDS < 200 mg/L and Boron < 1.045 mg/L for the MAP. In some cases where these goals were not achieved at any of the matrix operating points, the MAP was demonstrated noting the higher TDS and Boron concentrations.

Figure 6.18, Figure 6.19, and Figure 6.20 represent the cost analysis results from the NPV model for all the membranes tested at 6, 7.5, and 9 gfd. The costs include the estimated capital cost as well as the O&M costs for a conceptual 50 mgd facility. From the figures, it is evident that there is a general downward trend in cost per unit volume as recovery increases due to the feed water pumping and pretreatment costs. A recovery rate of 50% was demonstrated to be the lowest estimated total water cost. O&M costs comprise approximately 45% of the total water cost. SWRO power consists of approximately 22% of the total water cost. This is a significant reduction over the industry's perception, where it is commonly believed that power costs represent 50% of the total water costs for a SWRO facility. By comparing the capital costs as flux increases, it is apparent that higher flux resulted in lower capital costs. However, these cost savings were offset by an increase in operating costs and resulted in almost no difference in the total treatment costs. Designers may choose higher flux rates to minimize capital costs and produce the best quality water even though power costs, membrane replacement costs and cleaning costs may increase as a result.

At the manufacturer's request, the ADC operated the DOW Filmtec ISD Hybrid membranes at 9 gfd and a RO recovery of 55%. This extended recovery point achieved an estimated 3% savings in the total treatment cost, as seen in Figure 6.20.

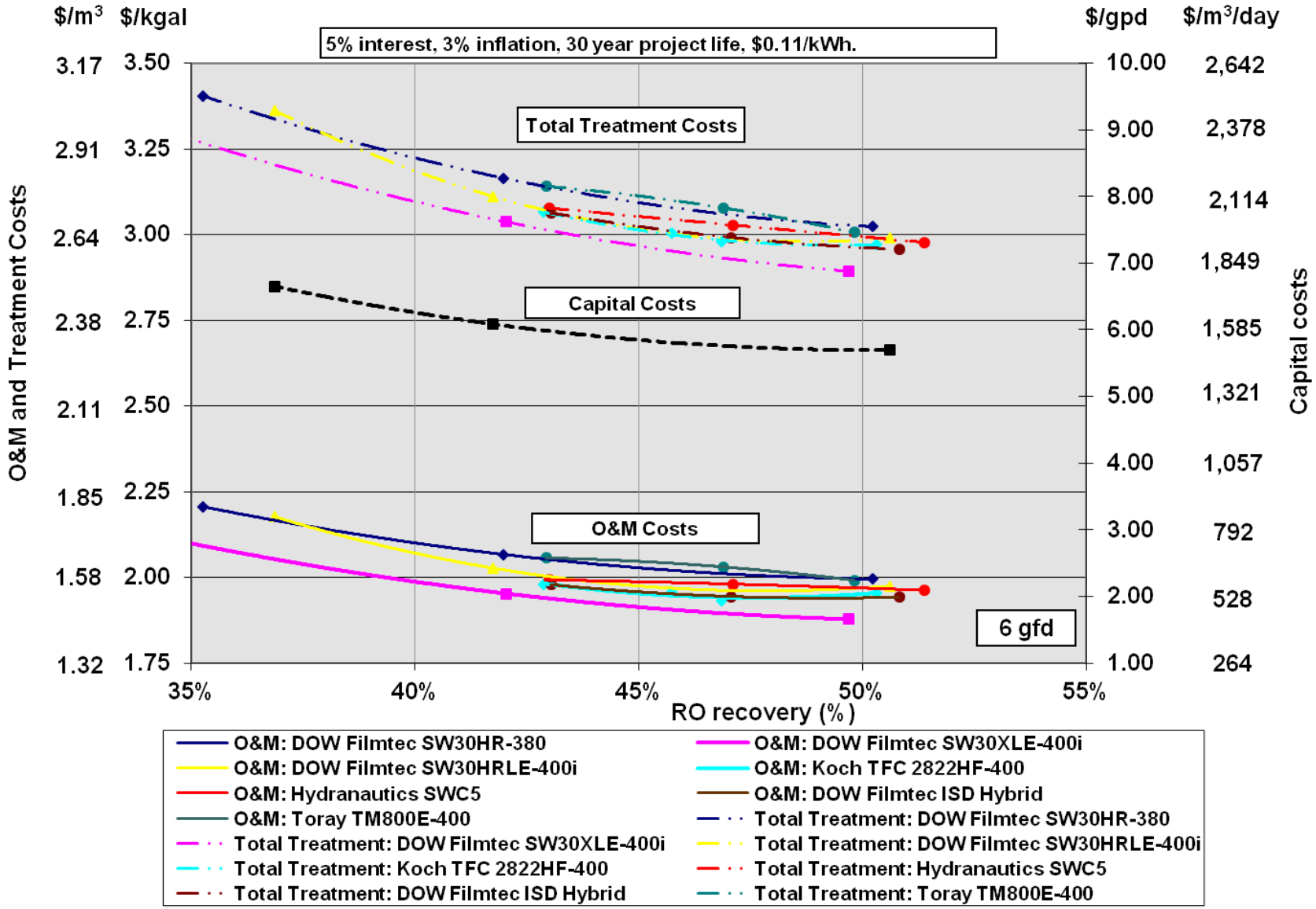

Figure 6.18 50 MGD SWRO Facility Costs at 6 gfd for various RO recoveries

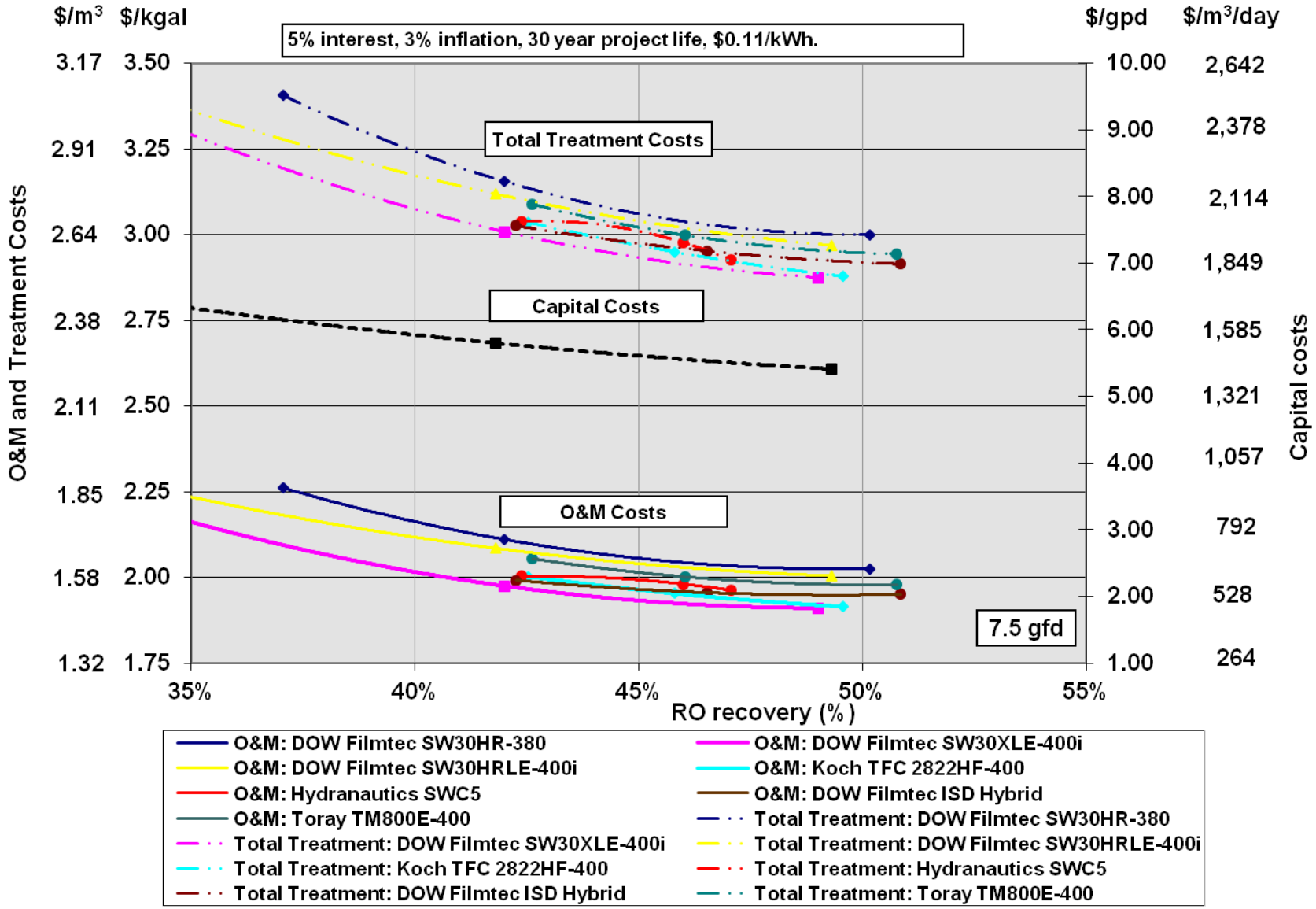

Figure 6.19 Projected 50 MGD SWRO Facility Costs at 7.5 gfd for various RO recoveries

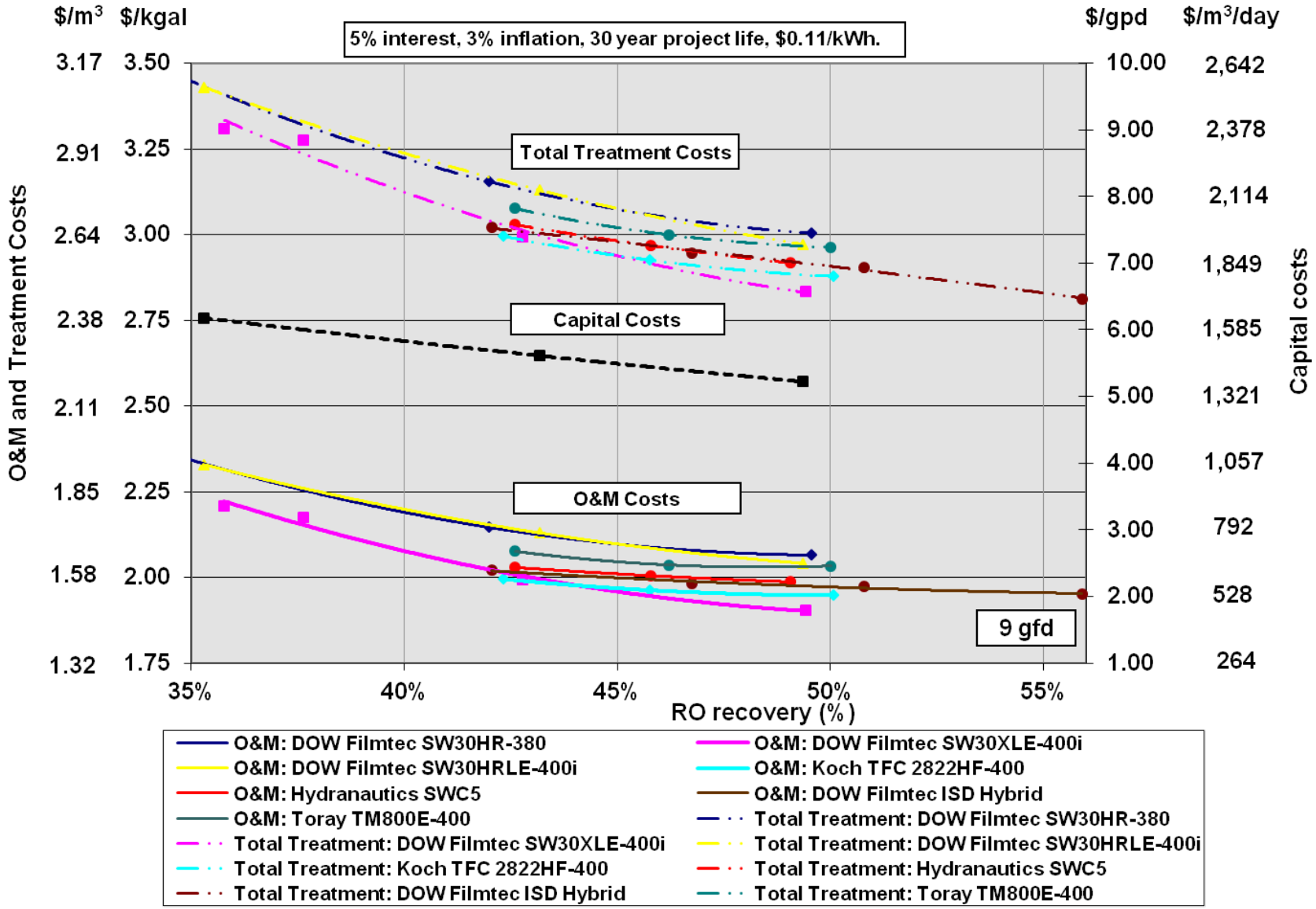

Figure 6.20 Projected 50 MGD SWRO Facility Costs at 9 gfd for various RO recoveries

6.4 Innovative Flow Regime for High Recovery

In an unbalanced flow regime, the RO recovery is decreased while the SWRO system operated in a concentrate recycle mode, so that a higher system recovery could be achieved. The equations governing this mode of operation were previously discussed in Section 4.5. From the low energy membrane tests, it was determined that Hydranautics SWC5 membrane produced good quality permeate at low to mid-range energy consumption and was chosen as the candidate for high recovery testing.

6.4.1 Membrane Performance

Multi-point tests for the unbalanced flow regime were conducted at two fluxes – 7.5 gfd and 9.0 gfd. Most of the 7.5 gfd test points were re-run after discovering that the baseline performance could not be achieved at the end of testing. Feed pressures applied during the initial high recovery tests (system recovery of 60% at 1200 psi) were higher than the feed pressures applied during membrane compaction (800 to 1000 psi). It is possible that the inability to re-establish baseline performance at the end of the test runs is attributed to slightly altered membrane structures during prolonged testing at 1200 psi. Subsequent testing did not include the highest recovery points and included a baseline performance check between each system recovery point. The permeate water quality results from the 7.5 gfd and 9 gfd multi-point testing are shown in Figure 6.21 and Figure 6.22, respectively.

Figure 6.21 and Figure 6.22 show that all tests up to 65% system recovery and 55% RO recovery produce acceptable permeate with a salinity TDS of less than 250 mg/L. Similar to the low energy membrane tests in the balanced flow regimes, as flux increases, permeate TDS and boron concentrations decrease. When flux is fixed and recovery increases, the salt passage increases.

Table 6.2 compares the results for the unbalanced flow regime original and re-run tests versus the balanced flow tests at the same flux rate of 7.5 gfd. For balanced flow tests at RO recoveries of 50% and 55%, the PX flow rates were below manufacturer's minimum requirements and resulted in excessive mixing (Refer to Figure 4.6 in Section 4.4). At these conditions, over-flushing with the low pressure RO feed flow was used to control mixing and simulate normal mixing levels.

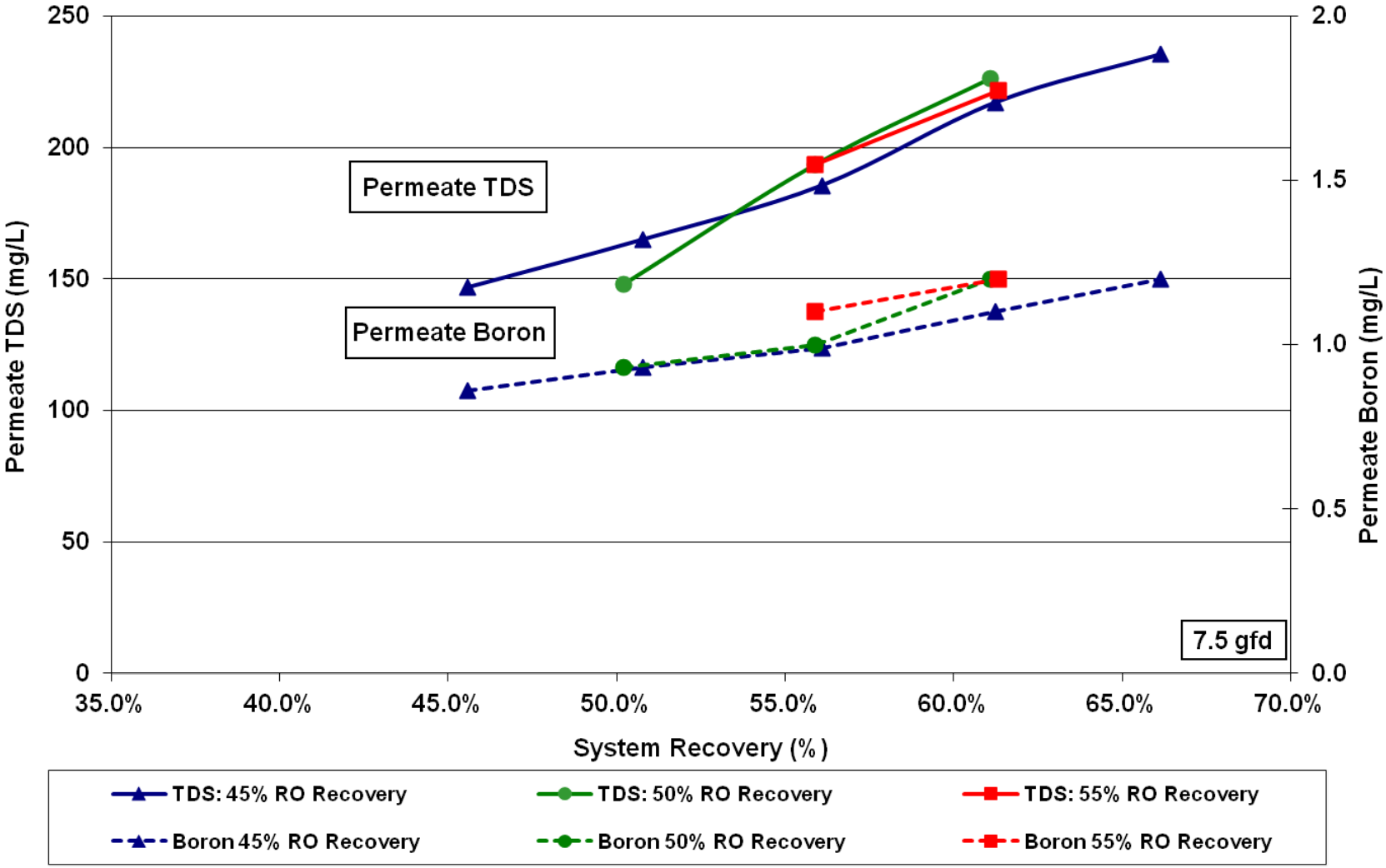

Figure 6.21 **Unbalanced Flow Regime High Recovery Testing: Permeate TDS and Boron Concentrations at 7.5 gfd (Membrane: Hydranautics SWC5).**

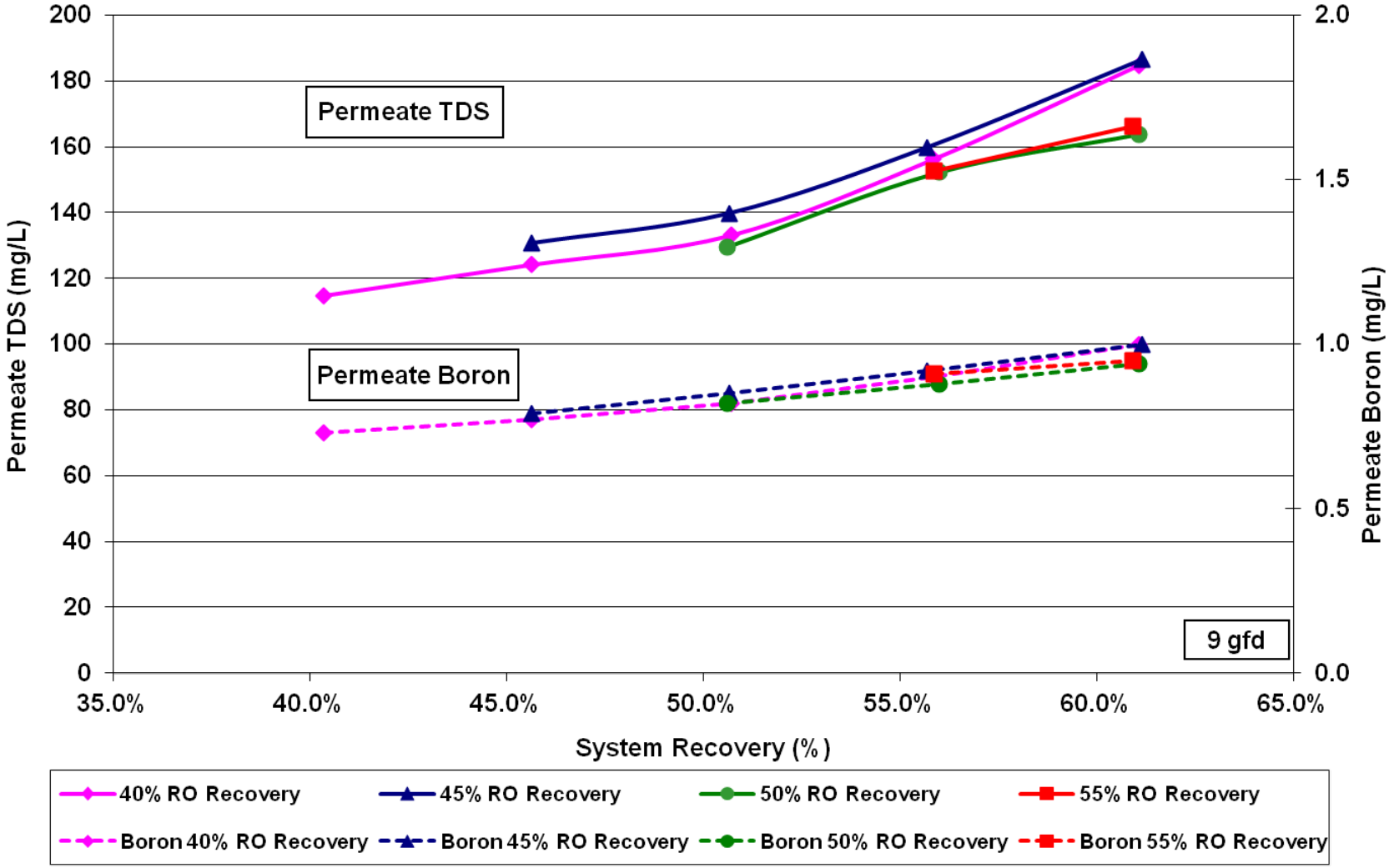

Figure 6.22 Unbalanced Flow Regime High Recovery Testing: Permeate TDS and Boron Concentrations at 9 gfd (Membrane: Hydranautics SWC5)

Table 6.2 Multi-point testing comparison at 7.5 gfd for balanced and unbalanced flow regimes

	Goal		Actual								
	RO Recovery %	System Recovery %	RO Recovery %	System Recovery %	RO Specific Energy (kWh/m^3)	Feed TDS (mg/L)	Permeate TDS (mg/L)	RO Membrane Feed Pressure (kWh/m^3)	Flux (gfd)	Temperature (^{o}C)	Test #
Ripening	42.5	42.5	42.6	42.6	1.77	33,250	119	770	7.53	15	1
Multi-Point Testing	40	40	40.6	40.7	1.81	32,670	129	783	7.51	14	1
		45	40.7	45.6	1.94	34,520	137	842	7.51	14	1
		50	40.6	51.0	2.13	37,190	158	928	7.49	14	1
		55	40.4	55.9	2.31	39,970	181	1005	7.47	14	1
		60	40.5	61.1	2.54	43,660	205	1105	7.53	14	1
	45	45	45.5	45.6	1.94	32,790	147	867	7.51	13	2
		50	45.5	50.8	2.06	34,220	165	922	7.49	14	2
		55	45.7	56.1	2.25	36,920	186	1015	7.51	14	2
		60	45.6	61.2	2.51	40,370	217	1120	7.49	14	2
		65	45.3	66.1	2.81	45,210	235	1242	7.44	13	2
	50	50	50.2	50.2	2.06	32,950	148	930	7.47	14	2
		55	51.0	55.9	2.20	34,850	194	998	7.53	16	2
		60	50.8	61.1	2.43	37,830	226	1099	7.49	16	2
	55	55	55.9	55.9	2.14	32,940	194	979	7.51	16	2
		60	56.2	61.3	2.43	36,980	222	1107	7.49	16	2
Balanced RO & System Recovery Points (shown for reference)	40	40	40.6	40.7	1.81	32,670	129	783	7.51	14	1
	45	45	45.5	45.6	1.94	32,790	147	867	7.51	13	2
	50	50 [1]	50.2	50.2	2.06	32,950	148	930	7.47	14	2
	55	55 [1]	55.9	55.9	2.14	32,940	194	979	7.51	16	2

Test 1: Original 7.5 gfd test. 40% RO Recovery was not performed in test 2, so a direct comparison can not be made.
Test 2: Re-run of 7.5 gfd test.

6.4.2 Energy Consumption

Figure 6.23 and Figure 6.24 show a minimum energy consumption point at 45% RO recovery for 7.5 gfd and 9.0 gfd test runs.Over the range of recoveries tested, RO membrane specific energy increases with recovery while the total specific energy for the water treatment facility decreases or remains steady up to 45% recovery. This is due to the increased volume of raw feed water that must be pumped and treated at lower recovery rates to obtain the same volume of permeate. Above 45% system recovery, RO membrane specific energy increases at a higher rate, therefore increasing the total energy required as recovery increases. Therefore, these results show the importance of analyzing a facility process as a whole, and not just the RO specific energy.

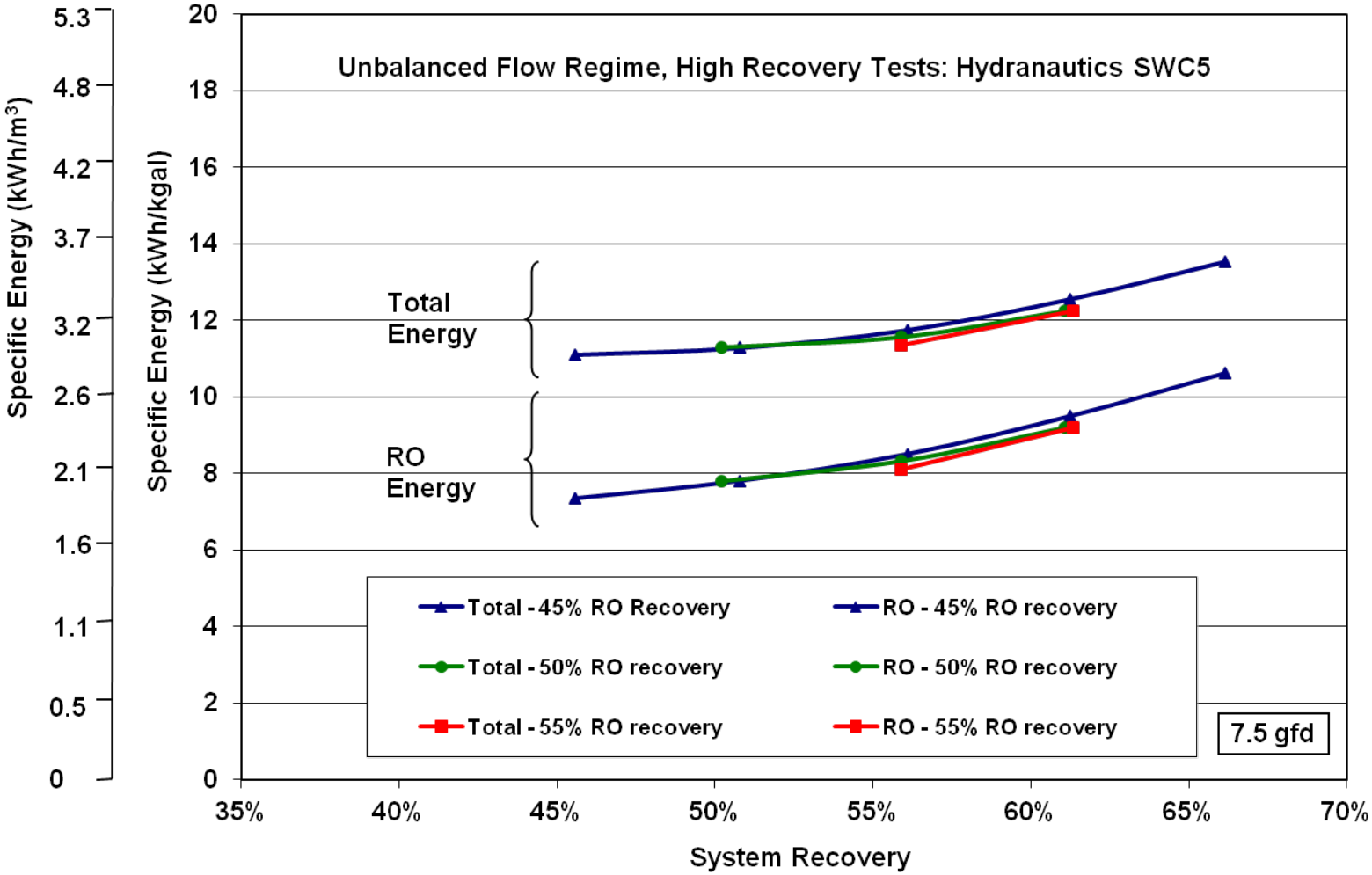

Figure 6.23 RO and Total Specific Energy for unbalanced flow regime high recovery tests at 7.5 gfd

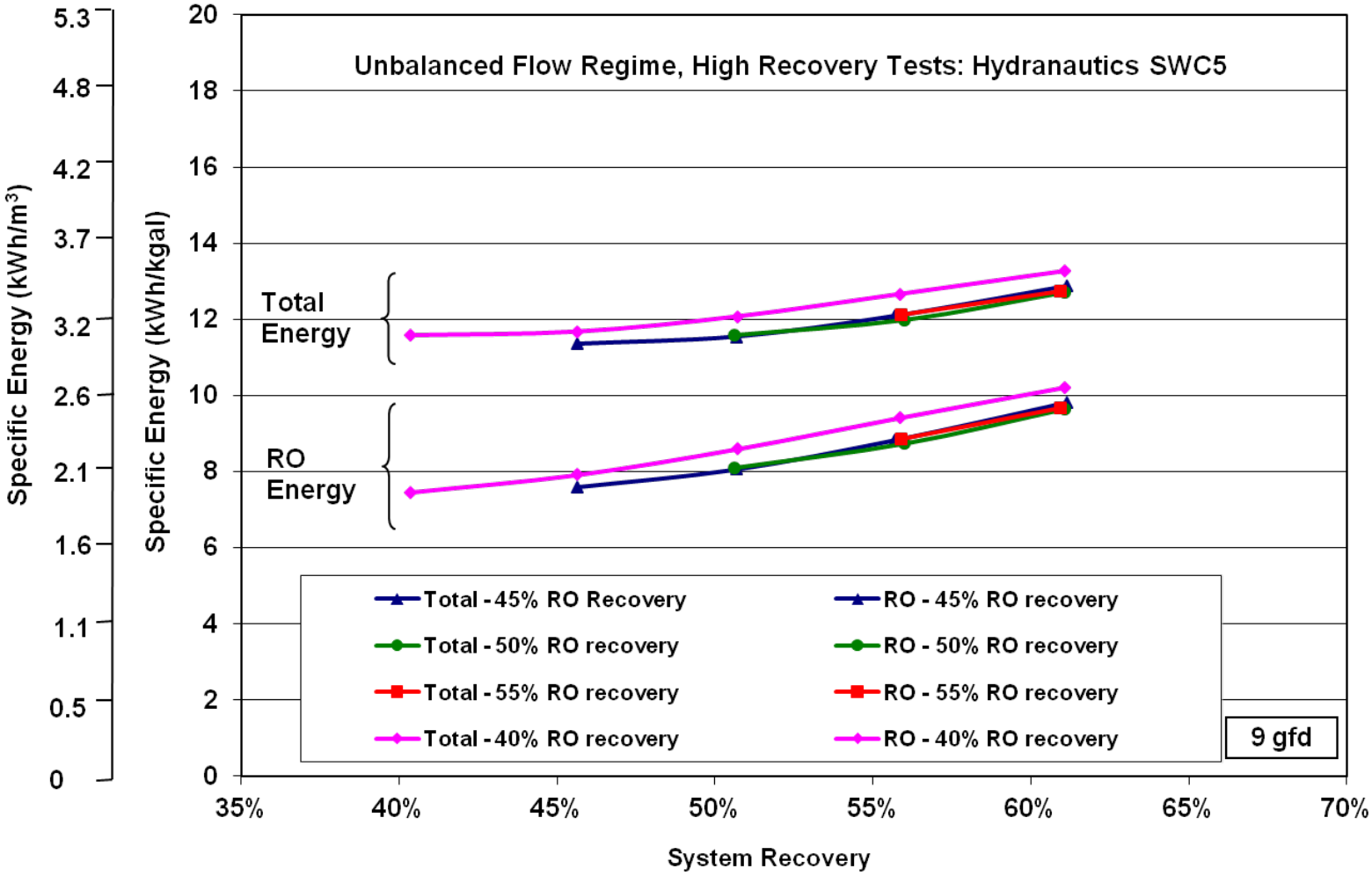

Figure 6.24 RO and Total Specific Energy for unbalanced flow regime high recovery tests at 9 gfd

In addition to obtaining improved and/or sustainable performance at higher recoveries, other benefits for operating the SWRO-PX system in the novel unbalanced mode include:

- Improved boundary layer conditions in the elements through increased feed velocities
- Optimal hydraulic conditions at the “low energy” recovery point
- Balanced membrane flux through increased lead element velocities
- Minimum brine flow requirements within manufacturers specifications
- Maximum allowable recoveries within manufacturers specifications
- Flexibility in handling source waters with variable feed water qualities (i.e., estuary treatment)

6.4.3 Cost and Most Affordable Point (MAP) Analysis

Estimated costs for the ADC’s conceptual 50 MGD facility for the unbalanced flow regime to increase system recovery are presented in Figure 6.25 and 6.26, for 7.5 and 9 gfd, respectively.

The costs include the estimated capital cost as well as the operation and maintenance cost over the range of membrane and system recovery conditions tested for these unbalanced tests. Projected costs presented assume that the 50 mgd SWRO facility is comprised of an existing open ocean intake and outfall and include in-line coagulation, deep bed media filtration, six RO trains with dedicated pumps, lime and carbon dioxide post treatment, new finished water pumping facilities.

According to the ADC’s 50 MGD (189,000 m^3/day) NPV model, the projected cost of water over the range of system recoveries ranged from \$3.00-3.16/kgal (\$0.77-\$0.82/m^3) for the 7.5 gfd flux tests and \$3.00-3.15/kgal (\$0.79-\$0.82/m^3) for the 9.0 gfd flux tests. Over the range of tested flux and RO membrane recoveries, the cost per unit volume remained nearly constant between 45 and 55% system recovery.

The cost per unit volume reached a minimum point at 50% system recovery / 45% RO membrane recovery at 9.0 gfd, and at 55% system / 50% RO recovery at 7.5 gfd. The balanced PX operation for low energy membrane tests in ADC I and II testing on the suite of membranes from various manufacturer showed the lowest estimated total water cost at 50% RO recovery. Operating at a RO recovery of 50% is slightly different from industry recommendations that advocate lower recoveries (e.g. 45%) to maximize membrane life, reduce cleaning frequencies, and produce the highest quality permeate. However, the impact of high recovery on membrane replacement costs, cleaning frequencies, and permeate quality are factored into the ADC’s NPV cost estimate.

Based on the total costs in Figure 6.25 and a conservative flux of 7.5 gfd, the most affordable point (MAP) was identified to be 50% System Recovery/ 45% RO Recovery. RO energy consumption of 7.81 kWh/kgal (2.06 kWh/m^3) at the 50/45 MAP and flux of 7.5 gfd is within the range of MAP points ((6.92-8.32 kWh/kgal (1.83-2.20 kWh/ m^3)) found during balanced flow tests in ADC I and II. At 7.5 gfd, O&M costs comprise approximately 66% of the total water cost. RO energy consists of approximately 29% of the total water cost at the 50/45 MAP.

As expected, the capital costs decrease as the system recovery increases at the expense of higher energy use and higher membrane fouling potential. However, the higher system recoveries that still maintain acceptable membrane recoveries can be invaluable for water treatment plants that have substantial space limitations, need to increase capacity, and can prevent or delay construction of additional facilities by increasing recovery.

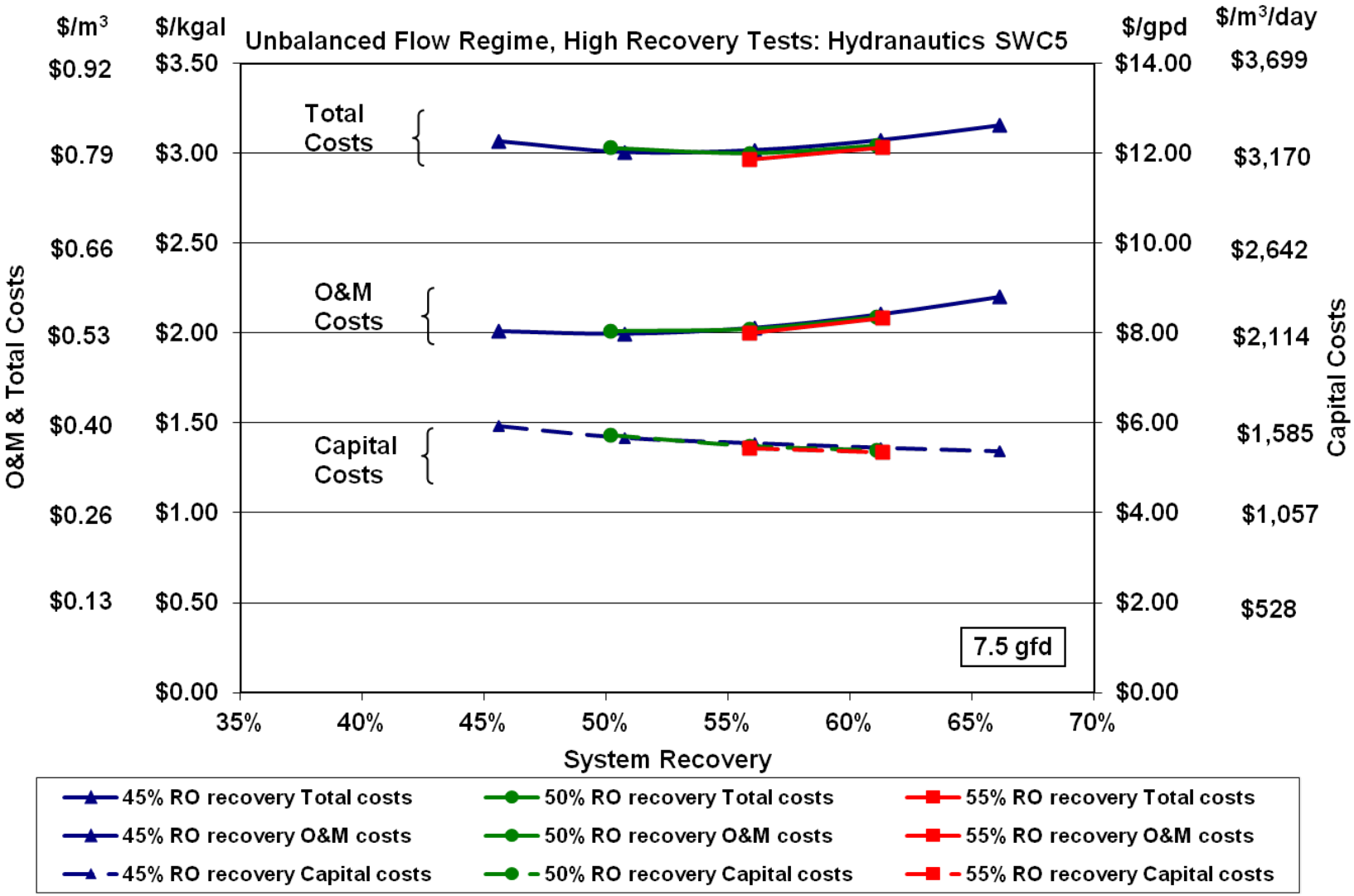

Figure 6.25 Projected 50 MGD SWRO Facility Costs at 7.5 gfd for various system recoveries

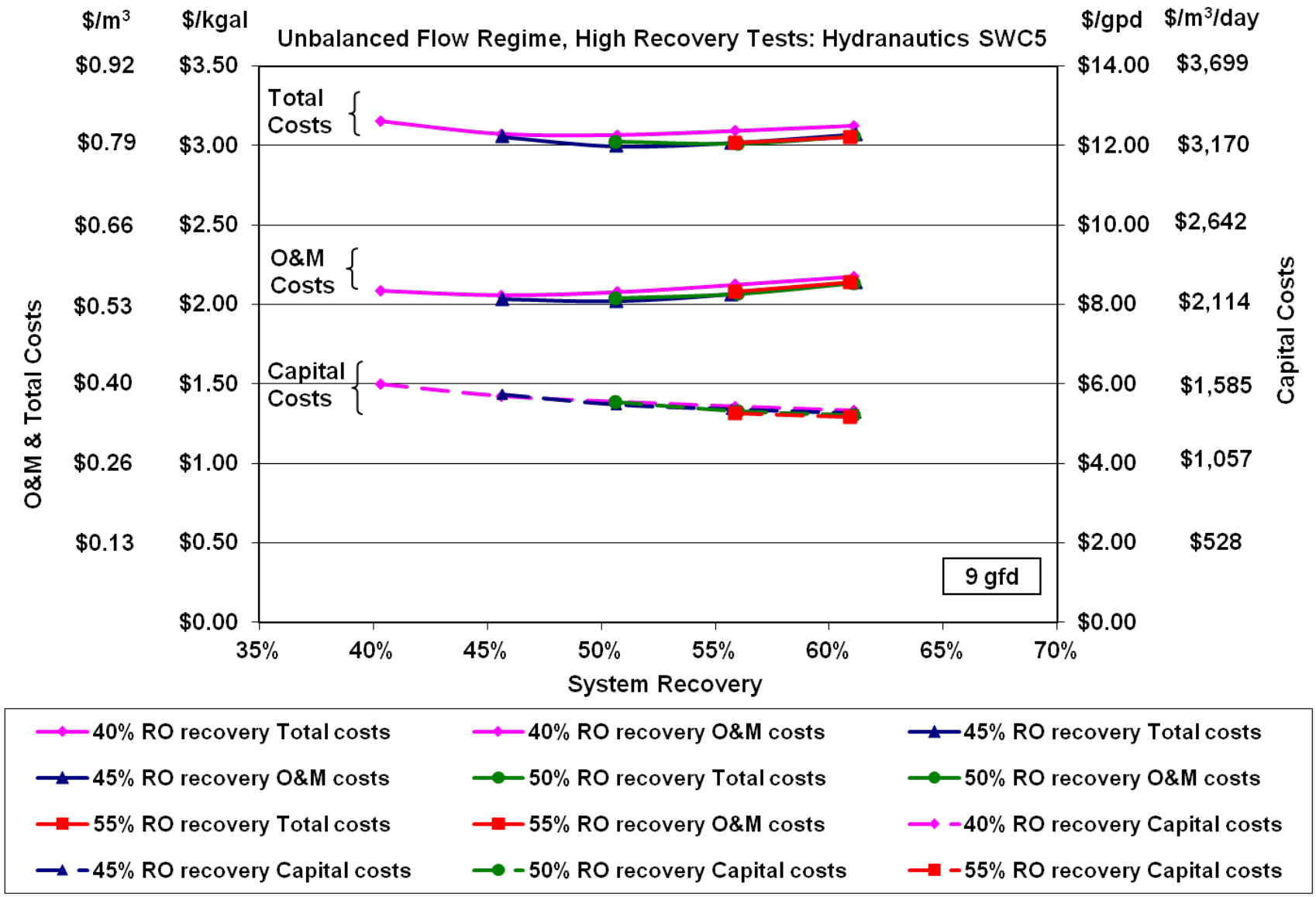

Figure 6.26 Projected 50 MGD SWRO Facility Costs at 9 gfd for various system recoveries

6.4.4 Longer Term Testing

The multi-point testing results indicated that higher system recoveries of 60% to 65% were likely sustainable. Therefore, longer term testing was performed at a System Recovery/RO recovery of 60/45 and 7.5 gfd instead of the 50/45 MAP to test the system limits. The test covered 1 month of continuous operation (Figure 6.27). This graph shows both stable energy use and product TDS. Pressure, recovery, and flux all remained constant. While longer term testing of 6 months would provide a more definitive indication of reliability, the results look promising for higher recovery operation when the associated higher energy use can be justified for expanded capacity.

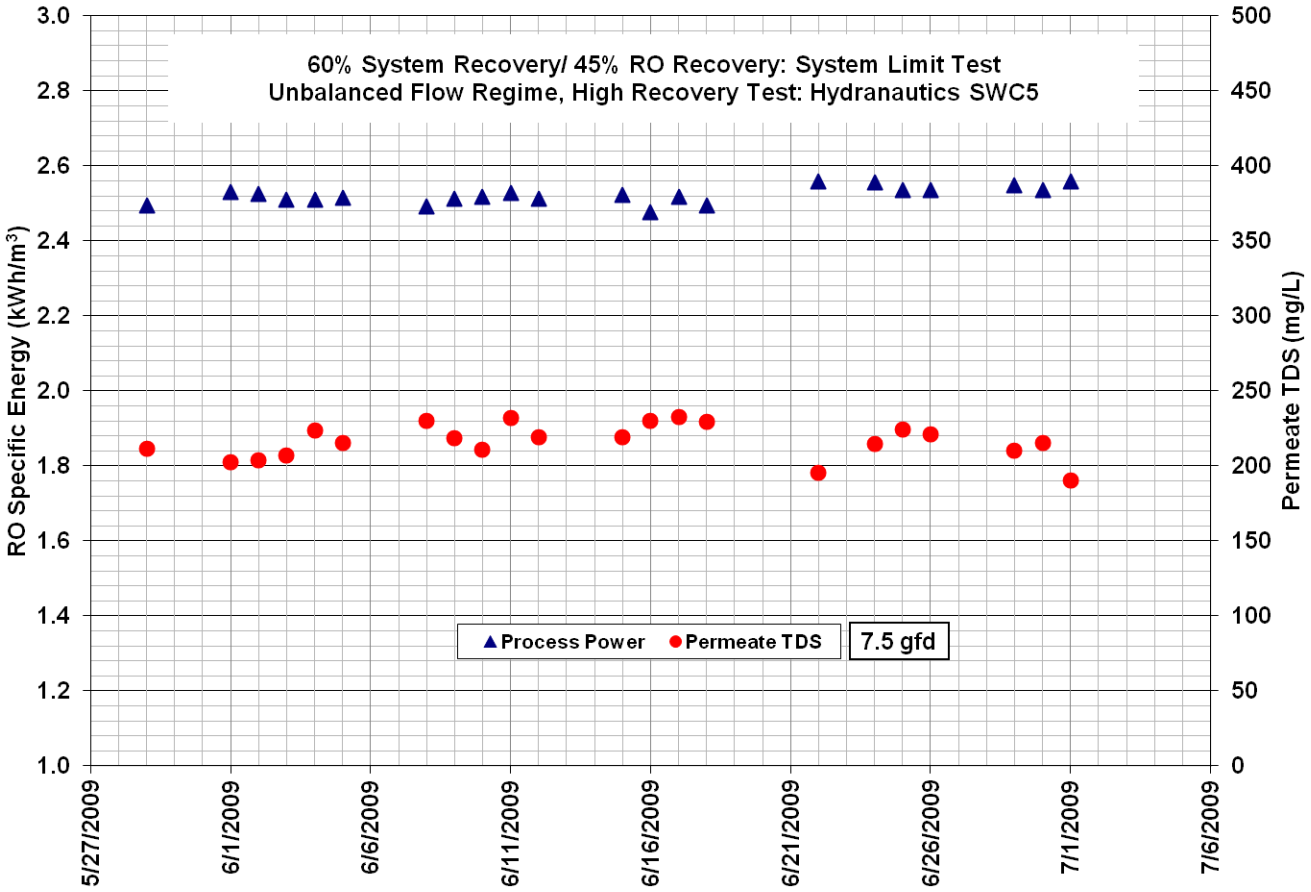

Figure 6.27 Unbalanced Flow Regime, High Recovery Test for 60/45 recovery at 7.5 gfd

7.0 Conclusions

The following results and conclusions can be made from the ADC's demonstration study data and a conceptual 50 MGD SWRO facility:

- Membrane testing was performed consecutively and was not conducted as a side by side evaluation. Therefore, the results should not be used to make a direct membrane performance comparison, but estimated differences in performance and cost can be derived.
- Though the RO specific energy generally increases with recovery rate, between 40-45% system recovery the total energy required for treatment decreases or remains stable up to approximately 50%. This is due to the increased volume of raw feed water that must be pumped and treated at lower recovery rates to obtain the same volume of permeate.
- For seawater RO systems with varying feed water TDS (i.e., estuary or seawater under the influence of surface waters), the ability to unbalance the PX and increase system recovery can help maintain stable RO feed pressures keeping the main HP pump operation at desired and efficient operating points. Furthermore, pretreatment energy and operating costs can be saved.
- The lowest projected SWRO water treatment facility cost occurred at 55% system recovery /50% RO membrane recovery. This is consistent with previous testing and typical industry recommendations for lowest energy operation.
- The projected total water cost reached a minimum at 50% system recovery / 45% RO membrane recovery at 9 gfd and at 55%/50% at 7.5 gfd, but other nearby points were of similar cost. These results potentially expand the lowest cost operating point options from typical industry recommendations.
- The unbalanced PX flow conditions allow for system recoveries greater than the 50% membrane recovery limits for the typical warranty considerations. Results show that system recoveries of up to 65% are potentially sustainable. Longer term testing for 1 month at 60% system recovery / 45% RO recovery show reliable membrane operation.
- The UF membrane pretreatment system showed reliable operation with over 6 months of operating time, and did not experience any red tide events to stress the system. The feed water to the RO system was of consistent water quality unaffected by changes in feed water turbidity.

The ADC has been able to demonstrate total energy consumption for seawater desalination at 11.28 kWh/kgal (2.98 kWh/m^3) at a projected total cost of \$3.00/kgal (\$0.79/m^3). These costs include escalations in commodity costs and other factors compared with previous ADC low energy / low cost results of 10.4 to 11.3 kWh/kgal (2.75-2.98 kWh/m^3) at a projected total cost of \$2.83-3.00/kgal (\$0.75-\$0.79/m^3). These energy levels and cost figures are comparable to other traditional sources. For example, in Southern California the State Water Project, which transports water from Northern California to Southern California, consumes on average 10.4 kWh/kgal (2.75 kWh/m^3). In San Diego, California end users can pay more than \$6.00/kgal (\$1.58/m^3). Therefore, Southern Californian seawater desalination is a drought-proof affordable and reliable new source of high quality fresh water.

8.0 Project Deliverables

Deliverables for the ADC II projected were provided in the form of Quarterly reports, according to section 14 of the contract document and included a statement of progress, schedule updates and financial status and reports. Table 8.1 provides a list of all the quarterly reports that were provided and section 14.0 provides copies of each report.

Table 8.1 List of Deliverables – Quarterly Reports

Quarterly Reports	Date(s)	Author(s)	DWR Submittal
Quarterly Report	2-8-11	John MacHarg	Q1-10
Quarterly Report	2-2-11	John MacHarg	Q4-09
Quarterly Report	7-27-10	John MacHarg	Q3-09
Quarterly Report	3-5-10	John MacHarg	Q2-09
Quarterly Report	10-19-09	John MacHarg	Q1-09
Quarterly Report	10-6-09	John MacHarg	Q4-08
Quarterly Report	12-12-08	John MacHarg	Q3-08
Quarterly Report	7-24-08	John MacHarg	Q2-08
Quarterly Report	4-28-08	John MacHarg	Q1-08
Quarterly Report	1-24-08	John MacHarg	Q4-07
Quarterly Report	10-12-07	John MacHarg	Q3-07
Quarterly Report	7-25-07	John MacHarg	Q2-07

9.0 Dissemination/ Outreach Activities

During the Proposition 50 contract period of performance the ADC provided more than 14 papers, presentation and/or articles on the work completed through the ADC I and II projects. See section 11 for copies of the papers, articles, and press releases.

Table 9.1 List of Presentations and Publications

Trade Show/Conference/Publication	Date(s)	Author(s)	Presenter	DWR Submittal
Reducing the Energy Consumption of Seawater Reverse Osmosis Past, Present and Future, Water Scarcity UNESCO UC Irvine Dec-2008	Dec-2008	John MacHarg	John MacHarg	Q4-09
Optimizing Lower Energy Seawater Desalination, The Affordable Desalination Collaboration	Nov-2009	Stephen Dundorf, John MacHarg, Bradley Sessions, Thomas F. Seacord	Stephen Dundorf	Q3-09
Permeate Recovery Rate Optimization at the Alicante Spain SWRO Plant	Nov-2009	Richard Stover, Antonio Ordonez Fernandez, Joan Galtes	Richard Stover	Q3-09
ADC Presentation at CA-NV-AWWA Desal Workshop	June-2009	John MacHarg	John Macharg	Q2-09
ADC Presentation UCLA Work shop	Feb-2009	n/a	John MacHarg	Q1-09
ADC Base Lines SWRO System Performance, Water and Desalination Report	September 2008	John MacHarg, Tom Seacord, Bradley Sessions	n/a	Q3-08
Joint ADC-AMTA-SEDA workshop, Annual Conference, Naples, FL	July 2008	ADC-AMTA-SEDA	Various	Q3-08
ADC Completes Profile of SWRO Press Release	March 28, 2008	ADC	n/a	Q1-08
IDA World Conference, Gran Canaria, ADC II Update	October 21-26, 2007	Stephen Dundorf, Thomas F. Seacord, John MacHarg	Stephen Dundorf	Q3-07
Desalination and Water Reuse (DWR) Quarterly, Innovative Designs to be Tested in ADC II	Aug/Sept-07	John P. MacHarg	n/a	Q3-07

AMTA 2007 Annual Conference, Las Vegas, ADC I 10 mgd Application	July 23-27, 2007	Bradley Sessions, Tom Seacord, P.E.	Tom Seacord	Q2-07
AWWA Membrane Technology Conference, Tampa Florida, Collier County results	March 18-21, 2007	Brandon Yallaly, P.E., Tom Seacord, P.E., Steve Messner	Brandon Yallaly	Q2-07

10.0 Final Financial Statement

The ADC had originally planned to complete 7 tasks, operate for 21 months and consume $1,000,000 in Proposition 50 State Grant funding. In the end, the ADC completed 9 tasks, operated for 31 months and consumed $920,937 in state funds, which was approximately 9% under budget. Table 9-1 provides a detailed breakdown of total project costs and state share funds. It is noteworthy that in January-2008 due to severe budget constraints the State of California froze all Proposition 50 disbursements for a period of more than 12 months during ADC II operation.

Table 10.1 Breakdown of Project Costs

	ADC	Prop 50	
	Non State Share	State Share	Total
	(II)	(III)	(IV) = (II+III)
Administration			
Salaries, wages		$ 346,362.00	$ 346,362.00
Fringe benefits		$ 133,455.50	$ 133,455.50
Supplies		$ 7,854.50	$ 7,854.50
Equipment		$ -	$ -
Consulting services	$ 47,500.00	$ 695.00	$ 48,195.00
Travel	$ 3,027.00	$ 9,171.50	$ 12,198.50
Planning/design/engineering	$ 10,000.00	$ 496.00	$ 10,496.00
Equipment purchases/Rentals/Rebates/Vouchers	$ 568,800.00	$ -	$ 568,800.00
Materials/Installation/Implementation	$ 21,000.00	$ 27,399.00	$ 48,399.00
Implementation verification	$ -	$ -	$ -
Project legal/License/Insurance fees		$ -	$ -
Structures			$ -
Land Purchase/Easement			$ -
Environmental Compliance/Mitigation/Enhancement			$ -
Construction			$ -
Other (Operating Cash)	$ 335,000.00		$ 335,000.00
Operation, monitoring and assessment		$ 328,102.55	$ 328,102.55
Report preparation	$ -	$ -	$ -
Outreach and information sharing	$ 179,156.00		$ 179,156.00
Subtotal	$ 1,164,483.00	$ 853,536.05	$ 2,018,019.05
Overhead (8%)	$ -	$ 67,401.36	$ 67,401.36
Total (o+p+q)	$ 1,164,483.00	$ 920,937.41	$ 2,085,420.41

11.0 Publications

I. INTRODUCTION

Increasing demand for allocated freshwater resources, declining freshwater quality, drought, and the need for a diverse water supply portfolio are among the many reasons that people across the United States and the world are looking to the sea as a potential water supply. However, in the United States, the high cost of desalination has historically hindered interest in seawater as a possible fresh water supply. Sensitive to the issue of cost as a limitation to realizing large scale implementation of seawater desalination, engineers, scientists, and the manufacturing industry have worked over the last two decades to reduce both the capital and operating cost associated with desalinated water.

The Affordable Desalination Collaboration (ADC) is a California non-profit organization composed of a group of leading companies and agencies in the desalination industry that have agreed to pool their resources and share their expertise in the mission to realize the affordable desalination of seawater. Using a combination of energy efficient, commercially available RO technologies including pumps, membranes and energy recovery equipment, the ADC has demonstrated that seawater reverse osmosis can be used to produce water at an affordable cost and energy consumption rate comparable to other supply alternatives. The research approach and results are made possible through the collaboration of members that include:

- California Department of Water Resources
- California Energy Commission
- Carollo Engineers
- City of Santa Cruz Water Department
- David Brown Union Pumps – Textron
- Eden Equipment Company, Inc.
- Energy Recovery Inc.
- FilmTec Corporation
- GE Zenon
- Marin Municipal Water District
- Naval Facilities Engineering Service Center
- Pentair - CodeLine Pressure Vessels
- Poseidon Resources
- San Diego County Water Authority
- Sandia National Laboratories
- Toray Membrane USA
- US Bureau of Reclamation
- US Desalination Coalition
- WaterEye
- West Basin Municipal Water District
- Young Engineering & Manufacturing, Inc

The ADC's demonstration scale seawater reverse osmosis (SWRO) treatment system uses pressure exchanger technology (ERI) for energy recovery (**Figure 1.1**). The RO array consists of 3 each x 7 element 8" DIA pressure vessel. The flux and recovery can be varied from 6-9 gfd and 35-60% respectively. The overall capacity of the system can be varied from approximately 200-300 m3/day (50,000-80,000 gpd).

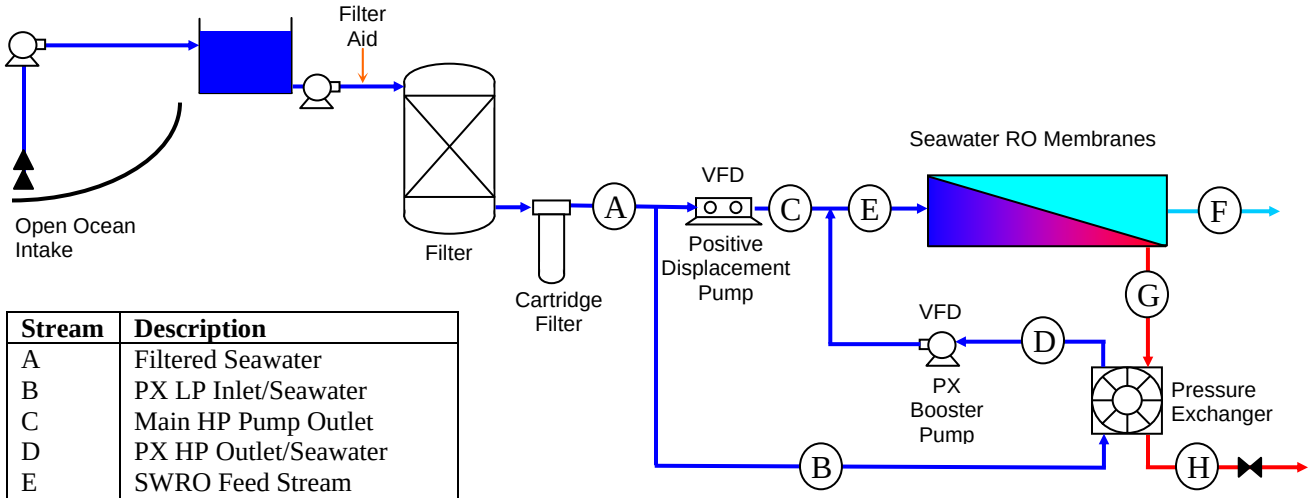

Stream	Description
A	Filtered Seawater
B	PX LP Inlet/Seawater
C	Main HP Pump Outlet
D	PX HP Outlet/Seawater
E	SWRO Feed Stream
F	SWRO Permeate
G	PX HP Inlet/SWRO Brine
H	PX LP Outlet/SWRO Brine

Figure 1.1 Process flow schematic

1.1 Phase I

The first phase of testing was completed in March 2006 and took place at the US Navy's Seawater Desalination Test Facility in Port Hueneme, California. Phase I focused on demonstrating the cost of optimized desalination using a combination of state-of-the-art, commercially available technologies that minimize power consumption and are scalable to 50 MGD. Testing included three membrane sets and varying flux and recovery to seek the most affordable operating point. The most affordable operating point was estimated by calculating the net present value for each tested condition, accounting for both capital and operating costs. Specific power consumption using the ADC's SWRO process design was demonstrated to range from 6.81 to 8.90 kW-hr/kgal (1.80 to 2.00 kW-hr/m3) at the most affordable operating point (i.e., 9 GFD, 50% recovery for the SW30HR-380 and SW30XLE-400i, and 6 GFD, 50% recovery for the SW30HR LE-400i). The lowest SWRO process energy consumption, 5.98 kW-hr/kgal (1.58 kW-hr/m3), was demonstrated using the SW30XLE-400i membrane at 6 GFD, 42.5% recovery.

1.2 Phase II

The second phase, scheduled to start in spring 2007, includes testing and demonstrating additional manufacturers' membranes through a similar protocol as Phase I, which involved DOW membranes exclusively. Demonstrating additional membranes will validate our results from Phase I and show that they can be achieved with several manufacturers' membranes. It will also allow for a direct comparison matrix of performance from four leading membrane manufacturers (DOW, Hydranautics, Toray, Koch). DOW's "next generation" hybrid-membrane will also be tested and demonstrated. Their new concept includes internally staging membranes of different performance down a single 7-elemenet pressure vessel. In Phase II, the ADC will develop and test new process designs that are possible as a result of the isobaric energy recovery technologies. As a natural result of pressure exchanger (PX) technology in particular, there are new kinds of flow schemes that can improve the performance of higher recovery seawater and brackish water systems. In Phase II, these new flow schemes will be used to demonstrate recoveries of seawater systems above 50%, while still maintaining good water quality and low energy consumption. Finally, the ADC will also test and demonstrate advanced prefiltration technologies

throughout the testing, and specifically the Zenon ultrafiltration system. In general, use of membranes for seawater pretreatment is limited and this work will provide valuable information for the U.S. and around the world.

1.3 Cost of Seawater Desalination

Over 95% of the world's water has yet to be tapped as a freshwater supply because it is considered too salty to drink. The need for seawater desalination is apparent, but has historically been limited in use due to its high cost. This high cost is associated with both capital costs and operating costs. However, over the last 15 years, capital costs for seawater desalination have decreased significantly (**Figure 1.2**).

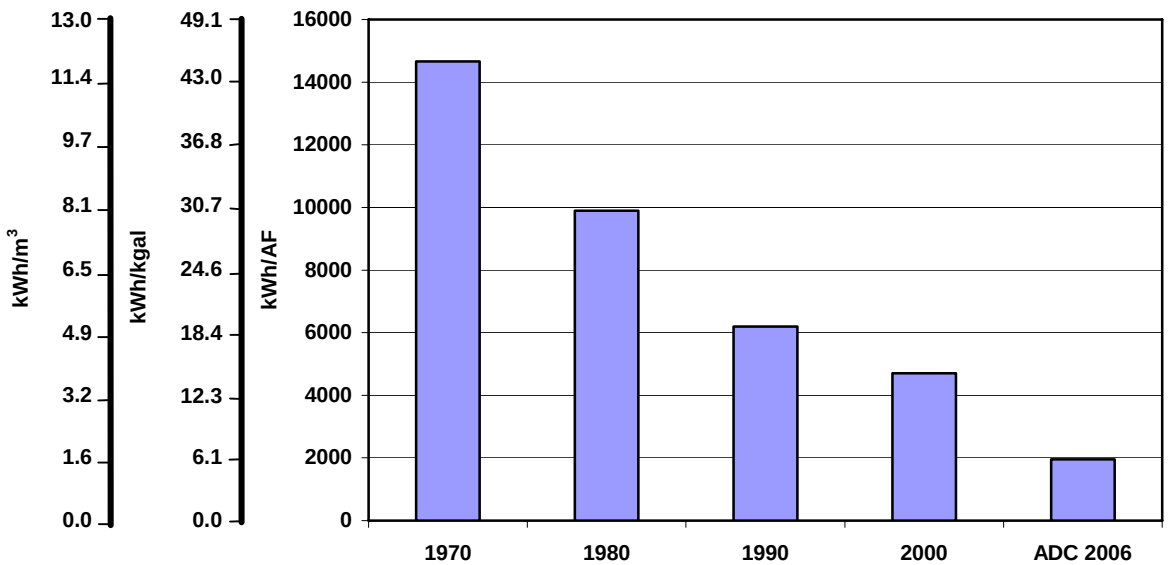

Figure 1.2 History of Power Consumption Required for Seawater Desalination Process Equipment

According to a report by the Bureau of Reclamation, in 1990, the cost for large scale seawater desalination was estimated to be approximately $2,000 per acre foot ($6.14/kgal, $1.62/m^3). However, membrane equipment prices have fallen substantially since 1990 and increased competition in the market has further reduced costs for capital components. Within the last 5 to 10 years, the focus has been on ways to reduce operating costs, particularly energy costs.

Little attention was given to energy consumption when seawater desalination was commercialized in the 1970s. As indicated in **Figure 1.2**, energy consumption for the desalination process was approximately 45 kW-hr/kgal (12 kW-hr/m^3), or 50% of the total costs for a seawater desalination plant. By 2000, the power consumption rate decreased to approximately 14 kW-hr/kgal (3.7 kW-hr/m^3) [4]. This was in large part due to several advances in technology that occurred during the 1990s, which include:

- New low energy reverse osmosis (RO) membranes with improved salt rejection
- High efficiency pumps and motors
- More efficient energy recovery devices (ERDs)

While these advances continue to occur, the industry's perception of seawater desalination energy consumption has not changed significantly since 2000. Many experts in the industry still believe that the seawater desalination process requires between 10 to 14 kW-hr/kgal (2.6 to 3.7 kW-hr/m^3).[5] As indicated in **Figure 1.3**, using these energy requirements, the power required for seawater desalination is

significantly higher than other water supply options in Southern California, which is, in part, why large-scale seawater desalination has not become a reality. However, as presented in **Figures 1.4** and **1.5**, based upon the work conducted during this project, using commercially available technologies applied in a manner where design emphasis is placed on energy efficiency and responsibly reducing the overall total water costs, a new paradigm for the costs of seawater desalination is now available. Seawater desalination can now be considered cost competitive with other new water supply options in Southern California.

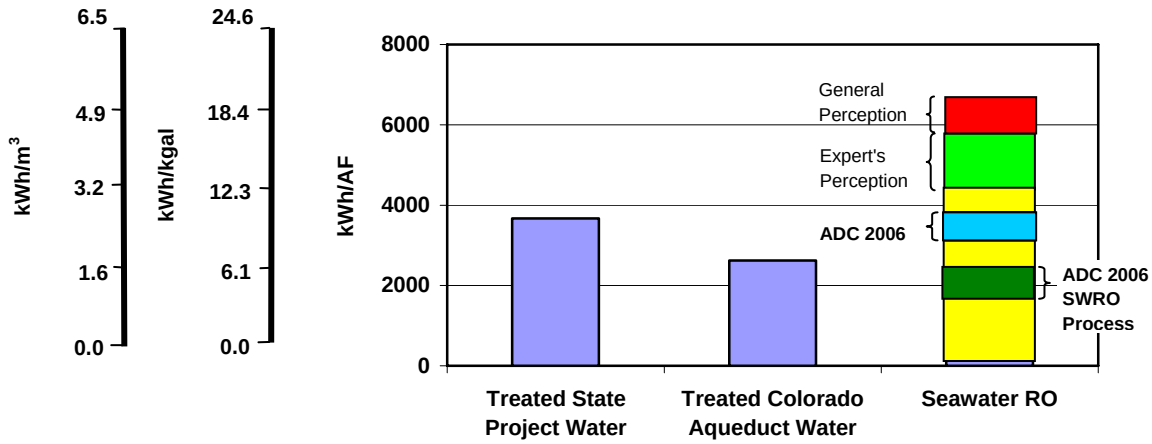

Note: 1. "ADC 2006 SWRO Process" power represents the estimated power required for the SWRO process only. "ADC 2006" denotes the estimated power required for finished water production, which includes the SWRO process.

Figure 1.4 Estimated Power Required for Finished Water Supply Options in Southern California

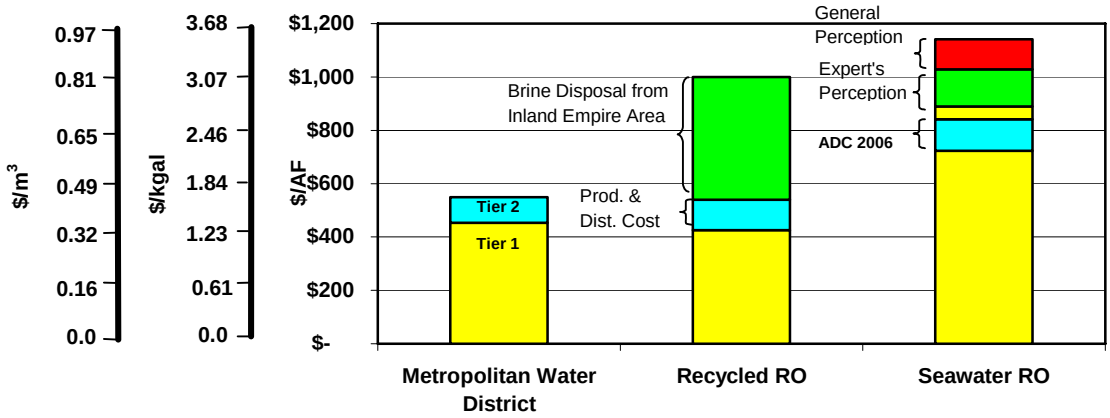

Figure 1.5 Finished Water Cost of 50-MGD Water Supply Options in Southern California

II PHASE I CONCLUSIONS & RECOMMENDATIONS

2.1 Conclusions

- The ADC's results must be taken within the context of the raw water quality conditions tested. These conditions include a lower feed temperature than would typically be seen at a SWRO plant fed warm water from a once through cooling power plant. Therefore, at higher temperature, the membranes, at a flux of 6 gfd will produce water with higher permeate TDS but with about lower

specific energy. Further testing and evaluation is required to determine the impact of temperature.

- Increasing flux (at constant recovery) on the SWRO membranes results in lower concentrations of TDS and boron in the permeate.
- Increasing recovery (at constant flux) results in higher concentrations of TDS and boron in the SWRO permeate.
- Direct contact of brine to SWRO feed water in the PX device resulted in approximately 4 to 6% increase to the SWRO system feed water TDS. This increase in feed water TDS resulted in approximately 30 psig higher feed pressure (i.e, at 50% recovery) to produce the same permeate flow.
- Specific power consumption using the ADC's SWRO process design was demonstrated to range from 6.81 to 8.90 kW-hr/kgal (1.80 to 2.00 kW-hr/m^3) at the most affordable operating point (i.e., 9 GFD, 50% recovery for the SW30HR-380 and SW30XLE-400*i*, and 6 GFD, 50% recovery for the SW30HR LE-400*i*). The lowest SWRO process energy consumption, 5.98 kW-hr/kgal (1.58 kW-hr/m^3), was demonstrated using the SW30XLE-400*i* membrane at 6 GFD, 42.5% recovery.
- The ADC's design has demonstrated the ability to reduce power consumption by 38 to 40% over industry experts' perception of power required for SWRO system designs.[5]
- As train size gets larger, the ADC's power consumption may be difficult to replicate. Careful consideration of pump type, size and energy recovery system "pressure centers" should be considered to minimize power consumption.
- Data indicates that there is an optimal ("most efficient") recovery point with regards to energy consumption for a given membrane array and site conditions.
- Data indicates that flux vs. energy consumption is not linear.
- While high recovery consistently resulted in the lowest treatment costs, the impact of flux rate was questionable in some cases.
- A recovery rate of 50% consistently demonstrated the lowest estimated total water costs.
- Based upon the ADC's cost model, the cost for seawater desalination in California has been shown to be competitive with other new supply options, with costs ranging from $772 to $913/AF ($2.37 to $2.80/kgal, $0.63 to $0.74/$m^3$).

2.1 Recommendations

The data gathered during this study has led to some very promising results. To further validate and improve upon the findings of this study, the authors recommend the following:

- **Temperature**: Additional testing at warmer temperatures is recommended to help draw conclusions with regard to the acceptability of each membrane to meet permeate quality standards and the feed pressure (i.e., energy) required.
- **Pretreatment**: Pretreatment is a critical aspect of a successful seawater RO process. While media filtration is very capable of meeting the SDI and turbidity standards required for RO, the red tide event that occurred early during the study resulted in excessive backwashing frequencies and ultimately placing the study on standby. While the persistence of this event was an apparent anomaly in California, and even those seawater systems treating the Pacific Ocean using membrane pretreatment were challenged to produce enough water, the membrane pretreatment provided a consistent and reliable quality of water, which the ADC's media filter design could not. As a result, the authors recommend a further study to compare other types of media and advanced filtration designs.

- **Public Values**: SWRO system designers should consider public values to issues such as water quality and cost when selecting design conditions such as flux, recovery and membrane type. The community values may require the use of a membrane that rejects more TDS and boron, but requires more energy to produce water. Factors of safety in permeate quality may also be considered. The data presented in this paper indicated that the SW30XLE-400*i* membrane barely met the California standard for boron at a flux of 6 gfd. A higher flux or use of a different membrane may make sense for some communities.
- **Long Term Testing**: The ADC's test results represent conclusions based upon the performance of new membranes. The concept of the Cumulative Annual Replacement Rate (CARR) was used to adjust costs and normalize performance with respect to permeate quality and energy consumption. Long term testing is required to validate the flux and recovery at the most affordable operating point. In addition, long term testing is required to determine how specific power will vary with time and cleaning cycles. Furthermore, industry experience indicates that high flux and high recovery operation results in more frequent chemical cleaning and shorter membrane life. However, when balanced with capital costs on a life cycle basis, incurring these incidental operating costs often proves to be more economical, but more labor intensive to maintain.[14] A longer study is required to help quantify the differences that could not be derived from the ADC's data due to the short testing duration.
- **System Configuration**: Additional configurations for the SWRO system should be tested to compare alternate membrane types, energy recovery devices and pumping technologies. Many manufacturers have comparable technologies that are worthy of testing.
- **Large Diameter Membranes**: Cost estimates should consider the possible economy of large diameter pressure vessels and membrane elements which may reduce capital costs by approximately 20%.[15]
- **Increased Recovery Research**: Seek out, test and demonstrate system designs and technologies that can increase the achievable recoveries of SWRO systems.

III PHASE II STUDY OBJECTIVES AND PROJECT GOALS

The objective of this study is to test a state-of-the-art, energy efficient, demonstration scale SWRO process, designed and built using scalable, commercially available and/or new technologies, in a manner that would provide preliminary information necessary for estimating both capital and operating costs for a 50-MGD seawater desalination plant to supply potable water. This study incorporates recommendations from Phase I along with objectives from a major funding source, the California Department of Water Resources (DWR) Proposition 50. Phase I recommendations being incorporated include:

- Pretreatment
- System configuration
- Increased recovery research

Relevant California DWR Proposition 50 goals include:

- Opportunities for energy efficiency
- Improved membranes with high salt rejection and less susceptible to scaling and fouling
- Strategies for brine/concentrate management
- Better feed water pretreatment processes and strategies

The goal of this work is to:

- Improve seawater desalination treatment technologies in terms of cost, energy use, and environmental considerations
- Use the estimated costs generated as a result of this work to further refine the paradigm for engineers, planners and policy makers related to the costs of seawater desalination.

3.1 MATERIALS AND METHODS

The ADC's SWRO plant is being tested at the U.S. Navy's Desalination Research Center, located in Port Heuneme, California. This facility was chosen based upon the availability of experienced staff who were familiar with the operation of SWRO process equipment and the availability of an existing ocean intake and outfall that could be used with no permitting efforts.

The ADC's demonstration scale system design and testing protocols were developed by Carollo Engineers and reviewed by the ADC's members. The design and testing protocols established the basis for the study, how the equipment is to be tested, how the data is to be interpreted, and the cost estimating procedures. This process helps to ensure that the data and results developed during the study will not be influenced by a desired result. A detailed testing protocol is available on the ADC's website: www.affordabledesalination.com, and is summarized below. Password 1234 needed?

3.2 Equipment

The ADC's demonstration scale SWRO plant is designed to produce between 48,100 to 75,600 gallons per day (182 to 286 m^3/day) of permeate. The configuration will be similar to Phase I presented in **Figure 1.1**. As indicated, the process uses an open intake, pretreatment filter, cartridge filter, high efficiency positive displacement pump, and high efficiency isobaric energy recovery device. The media filter used for pretreatment in Phase I will be replaced with a more advanced filters such as ultrafiltration membranes. The design criteria for these components are presented in **Table 3.1**.

Parameter		Unit	Value
Filter (Media)			
	Loading Rate	gpm/ft^2	3 to 6
	Depth/Grain Size/U.C. of Anthracite	in/mm/-	18 / 0.85-0.95 / <1.4
	Depth/Grain Size/U.C. of Sand	in/mm/-	10 / 0.45-0.55 / <1.4
	Depth/Grain Size/U.C. of Gravel	in/mm/-	6 / 0.3 / <1.4
Filter (Membrane)			
	GE Zenon		
Cartridge Filter			
	Cartridge Specs		#2, 5-micron
	Loading Rate	gpm/10-in.	~1
Membrane System			
	Models		Toray Hydranautics, Koch
	Diameter	inch	8
	Elements per Vessel	No.	7
	Vessels	No.	3
High Pressure Pump [1]			
	Type		Positive Displacement
	TDH	ft (psig)	1385 to 2305 (600 to 1000)
Energy Recovery [2]			
	Type		Pressure Exchanger™ (PX™)
PX Booster Pump [3]			
	Type		Multi-stage Centrifugal

	TDH	ft (psig)	70 to 115 (20 to 50)

Note: Pressure Exchanger™ and PX™ are registered trademarks of Energy Recovery, Inc.
1 David Brown Union, Model TD-60
2 Energy Recovery, Inc., Model PX-70S
3 Energy Recovery, Inc., Model HP-8504

Table 3.1 Equipment design criteria

3.3 Operation and Monitoring

The system will be operated for approximately 18 months with work divided into 3 stages (**Table 3.2**).

		Month																	
Stage	**Description**	**1**	**2**	**3**	**4**	**5**	**6**	**7**	**8**	**9**	**10**	**11**	**12**	**13**	**14**	**15**	**16**	**17**	**18**
1	Low Energy Membranes																		
2	Staged Membranes																		
3	Innovative Flow Regimes																		
All	Advanced Pretreatment																		

Table 3.2 Project timeline

3.3.1 Stage 1: Low Energy Membrane Tes*ting & Demonstration (Hydranautics, Toray, Koch)* This stage will seek to demonstrate new commercially available "low-energy" membrane technology from three additional membrane manufacturing market leaders. Phase I of the ADC tested DOW's "low-energy" SW30XLE-400i and SW30HRLE-400i membranes with excellent results. The three additional new "low-energy" membranes are:

- Hydranautics (SWC5)
- Toray (TM800C)
- Koch (to be determined)

In testing membranes from three additional manufacturers the ADC will add to the Phase I work and validate that overall low energy numbers can be achieved with multiple commercial membrane suppliers. Furthermore, the ADC will be able to provide a comparative matrix of performance, using natural Southern California seawater in a full scale configuration, showing energy consumption, salt rejection, and boron rejection from the four leading membrane manufacturers. If the feed water and operating conditions are not exactly comparable between membrane sets then the data will be normalized and presented in the best possible way to provide an "apples to apples" comparison of performance.

The test protocol will be identical to ADC's Phase I testing. Each set of membranes will be run through an approximate eight week test protocol (**Table 3.3**). The first 2 weeks of testing are required to demonstrate that the performance of the membrane has reached steady state operation before the flux or recovery is modified. Weeks 3 through 5 involve changing the flux and recovery every day to collect data which is used to evaluate the most affordable operating condition. It is recognized that further testing will be required to validate the results of this test due to its short duration. Upon completion of the tests from weeks 3 through 5, the hydraulic, water quality and power data are analyzed and a net present value analysis is conducted to determine which test condition is the most affordable operating

point. The recovery and flux from the most affordable operating point is then run for approximately 2 weeks. The test is concluded with a brief operation at the initial condition (i.e., 7.5 gfd, 42.5% recovery) to collect data that were normalized using the ASTM standard for permeate flow and salt passage, to make certain that the membranes have not fouled.

Parameter	Week 1 to 2	Week 3 to 5									Week 6 to 8
Flux	7.5	6	6	6	7.5	7.5	7.5	9	9	9	TBD[1]
Recovery	42.5%	35%	42.5%	50%	35%	42.5%	50%	35%	42.5%	50%	TBD[1]

1. TBD = After completion of the flux/recovery variation tests during weeks 3 and 4, determined using ADC's cost model to be the "most affordable" condition.

Table 3.3 Test operating conditions

During each testing condition, hydraulic, water quality and power data are collected at periodic intervals. **Table 3.4** presents the type and frequency of manually collected data. Some parameters, such as power consumption, pressures, flows and permeate conductivity, are monitored both manually and automatically using on-line instrumentation. Manually recorded data will be presented in this report. Automatically recorded data will be presented on the ADC's website: www.affordabledesaliantion.com.

	Parameter	Weeks 1-2 and 6-8	Weeks 3-5
Flow	Permeate, Raw Water (PD Pump), Raw Water (into PX), Raw Water (out of PX)	1x per day	2x per day
Pressure	Filter Inlet, Filter Outlet, Cartridge Filter Outlet, PX Booster Pump Suction, PX Brine Outlet, SWRO Feed, SWRO Brine, SWRO Permeate	1x per day	2x per day
Power	PD Pump & PX Booster Pump	1x per day	1x per day
Water Quality	Temperature, Turbidity, SDI	Raw Water: 1x per day	Raw Water: 1x per day
	pH, Conductivity, TDS,	Raw Water: 1x per day RO Feed: 1x per day Permeate: 1x per day	Raw Water: 1x per day RO Feed: 1x per day Permeate: 1x per day
	Boron, Bromide, Iron, Manganese, Aluminum, Calcium, Magnesium, Sodium, Potassium, Bicarbonate, Carbonate, Sulfate, Chloride, Fluoride	Raw Water: 2x per week RO Feed: 2x per week Permeate: 2x per week	Raw Water: 1x every 2 days RO Feed: 1x every 2 days Permeate: 1x every 2 days

Table 3.4 Type and frequency of manual data collection

Water quality parameters sampled daily are analyzed using field kits and those parameters monitored weekly are analyzed using EPA or *Standard Methods.*[6]

3.3.2 Stage 2: Staged Membrane Testing using Dow FilmTec Hybrid Membranes

In addition to demonstrating the new commercially available and proven membrane technology described above, we will test a concept that is being developed by the FilmTec Corporation, which they are calling their hybrid approach. This new concept internally stages membranes of different performance down a single 7 element pressure vessel and seeks to balance the feed water distribution and flux rate from the lead element to the end element. DOW indicates that these new membranes will provide improvements in both energy consumption and water quality over their latest "low energy" membranes that were tested in the ADC Phase I project. This ADC II Proposition 50 proposal will also be applied to the hybrid membrane set.

3.3.3 Stage 3: Innovative Flow Regimes

This stage will involve the development and testing of new process designs that are possible as a result of the isobaric energy recovery technologies. As a natural result of PX technology in particular there are new kinds of flow schemes that may improve the performance of higher recovery seawater and brackish water systems. One example is shown in **Figure 3.1** and **Table 3.5** where the PX is intentionally unbalanced yielding an overall system recovery (F divided by A) of 54% and 31,900 tds feed water, but the membrane recovery (F divided by E) is at 44% and 38,501 tds feed water.

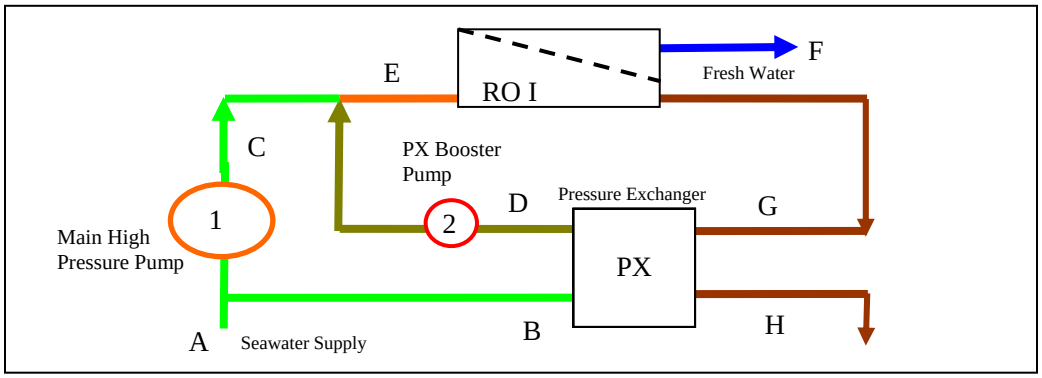

Figure 3.1 Unbalanced pressure exchanger diagram

		A	B	C	D	E	F	G	H
Flow	gpm	81	36	45	54	99	44	55	37
	gpd	116,899	52,387	64,512	78,307	142,819	63,072	79,747	53,827
	m^3/day	442	198	244	296	541	239	302	204
Pressure	psi	51	51	902	886	902	2.4	894	47
	bar	3.5	3.5	62.2	61.1	62.2	0.2	61.7	3.2
Quality	mg/l TDS	31,900	31,900	31,900	43,940	38,501	172.3	67,370	67,320

PX Unit Flow

Flow	55	gpm
PX Internal Bypass	1	gpm
PX Differential HP side	8	psi
PX Differential LP side	4	psi
PX Efficiency	97.2	%
Membrane Differential	8	psi
RO Recovery	44	%
System Recovery	54	%

	High Pressure Pump	**PX Booster Pump**
Feed Pump Efficiency	90%	60%
Motor Efficiency	93%	90%
VFD Efficiency	97%	97%
Power (KW)	20.4	0.7

Table 3.5 Unbalanced pressure exchanger data

This data point taken showed promising results with an overall energy consumption of 8.03 kWh/kgal and permeate quality of 172 mg/l TDS. Mechanisms associated with this novel mode of operation that might lead to improved performance at higher recoveries include:

- Improved boundary layer conditions through increased velocities
- Optimal hydraulic conditions at the "low energy" recovery point
- Balanced membrane flux through increased lead element velocities
- Minimum brine flow requirements within manufacturers specifications
- Maximum allowable recoveries within manufacturers specifications

Figure 3.2 shows RO energy consumption, total system energy consumption, water quality and total treatment costs verses the overall system recovery.

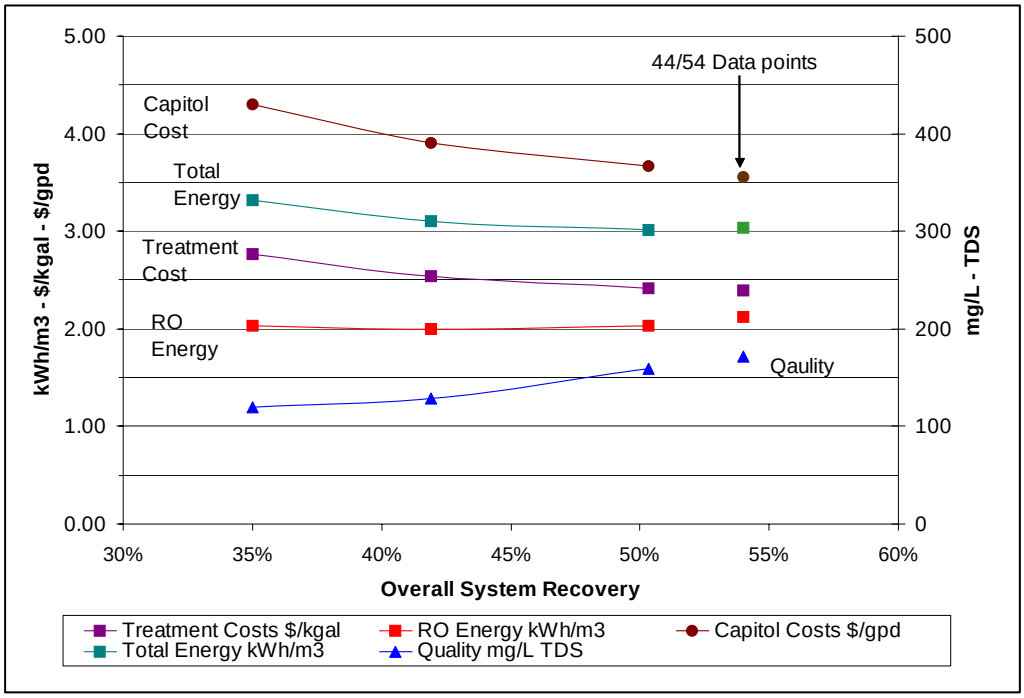

Notes: 1. Curve data from ADC I SW30HRLE-400i membrane set. – 2. RO energy includes HP pump and PX booster. – 3. Total energy includes 200 TDH raw water pumps, 105 TDH filter pumping, 40 TDH permeate pumping, and 200 TDH permeate distribution header. – 4. Treatment and capitol costs were generated using net present value model from ADC I.

Figure 3.2 Phase I balanced data next to 44/54% recovery unbalanced data

The four curves showing data between 30-50% system recovery are taken from the ADC I where we operated the pilot system at balanced flows. The four data points taken at 44/54% recovery were generated by operating the pilot system at the data point shown in **Table 3.5**. The unbalanced data points at 44/54% recovery are consistent with the trends and data taken at balanced PX flows between 30-50% recovery. Looking at the treatment and capitol costs curves from ADC I we can see that a significant savings may be achieved by pushing the system recoveries higher.

Testing the unbalanced PX effect is straight forward and can be achieved with the ADC demonstration system in its current configuration. The 44/54% recovery data points presented in **Table 3.5** are from an actual operating point taken at the ADC pilot facility to demonstrate the concept.

Another flow scheme that the ADC plans to test incorporates an interstage booster approach in combination with a different pressure exchanger design (**Figure 3.3**). This Interstage Booster-Pressure Exchanger Hybrid design can also be used to push system recoveries beyond 50%.

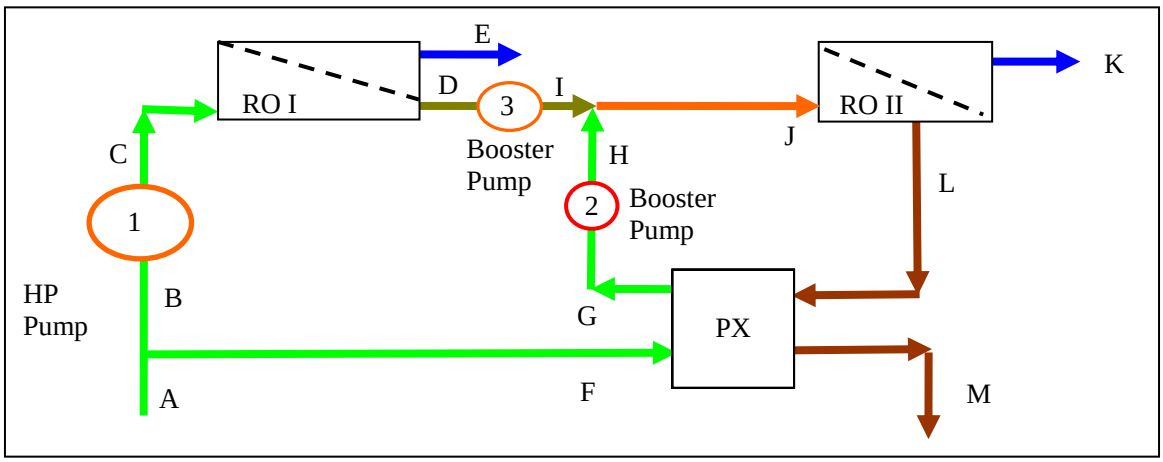

Figure 3.3 Interstage Booster-Pressure Exchanger Hybrid diagram

Table 3.6 shows an example of one operating point. This point was developed using the ROSA 6.0 membrane software with the SW30XLHR-400i membrane. See section N for actual membrane projections. The modeled results are promising for a 55% recovery system with an overall energy consumption of 8.62 kWh/kgal and blended permeate TDS of 144 mg/l. It is also notable that the first stage is projected to operate at around 719 psi and the second stage is projected to operate at around 1023 psi. These are markedly lower pressures than other types of high recovery schemes such as the brine conversion system (BCS), which typically reach pressures in excess of 1200 psi. Furthermore, the overall recovery for any 7-element vessel never exceeds 50% remaining well within the manufacturer's recommendations for minimum brine flows.

To test the interstage hybrid approach the ADC will need to make significant modifications to the current system that include the addition of an interstage booster pump and reconfiguration of the current 3ea, 7-element parallel vessel array into a single 7-element vessel feeding a second single 7-element vessel in series. The test protocol for both the Unbalanced and Hybrid flow schemes may look at a range of recovery and flux rates. Overall system recoveries between 45-65% may be considered.

		A	B	C	D	E	F	G
Flow	gpm	55	31	31	17	14	24	24
	gpd	79,600	44,800	44,800	24,640	20,160	34,800	34,800
	m^3/day	301	170	170	93	76	132	132
Pressure	psi	30	30	719	702	0	30	987
	bar	2.1	2.1	49.6	48.4	0.0	2.1	68.1
Quality	mg/l TDS	33,073	33,073	33,073	60,038	120	33,073	35,752

		H	I	J	K	L	M	K+E
Flow	gpm	24	17	41	17	25	25	31
	gpd	34,800	24,640	59,440	23,776	35,664	6,240	43,936
	m^3/day	132	93	225	90	135	137	166
Pressure	psi	1023	1023	1023	0	997	20	0
	bar	70.6	70.6	70.6	0.0	68.8	1.4	0.0
Quality	mg/l TDS	35,752	60,038	45,820	164	74,293	69,464	144

PX Unit Flow

Flow	24.8	gpm
PX Internal Bypass	1.0	gpm
PX Differential HP side	10	psi
PX Differential LP side	10	psi
PX efficiency	97.2	%
Membrane Differential I	17	psi
Membrane Differential I	26	psi
RO Recovery I	45	%
RO Recovery II	40	%
System Recovery	55.2	%

	High Pressure Pump	PX Booster Pump	Interstage Booster Pump
Feed Pump Efficiency	90%	65%	65%
Motor Efficiency	93%	92%	92%
VFD Efficiency	97%	97%	97%
Power (KW)	11.1	0.6	4.0

Table 3.6 Interstage booster-pressure exchanger hybrid data

These new process designs may also help improve the performance and increase the achievable recoveries of brackish water desalination systems throughout California and across the United States. The ADC plans on working closely with leading membrane manufacturers to help develop and optimize these new designs and ideas. Before testing, the ADC envisions holding a collaborative workshop to discuss and advance these ideas and plans to include at least one technical expert from each of the participating membrane manufacturers.

Finally, it should be noted that these new process designs can be demonstrated and implemented with "off the shelf" equipment and technologies. In other words, the membranes, pumps, and energy recovery devices will all be operated within the manufacturers' general recommendations and specifications.

3.3.4 Advanced Pretreatment

Advanced filtration system(s) will be used throughout the project. Initially, the ADC will test a Zenon Environmental/GE ZeeWeed® 1000 membrane pilot system. ZeeWeed® based water treatment is a low energy immersed membrane process that consists of outside-in, hollow-fiber modules immersed directly in the feed-water. The small pore size of the membranes ensures that no particulate matter, including Cryptosporidium oocysts, Giardia cysts, suspended solids or other contaminants of concern, will pass into the treated water stream.

The ZeeWeed® 1000 immersed membrane system can easily remove particles that are greater than 0.1 microns in size without any pretreatment. Furthermore, if dissolved components can be first converted to insoluble species, the membrane will subsequently remove them as well. For example, the size of natural organic matter present in surface waters is generally smaller than the membrane pore size. Similarly, iron and manganese can also exist in dissolved forms that can pass through the membrane. However, the ZeeWeed® 1000 process is compatible with upstream pretreatment such as enhanced coagulation and oxidation, which can convert contaminants from dissolved to suspended forms that are unable to pass through the membrane. These features and advantages will help the ADC and other full scale seawater desalination systems operate more reliably through the California summer water conditions that include green algae blooms and red tide events.

Although Zenon's advance pre-filtration system is being added to the ADC study primarily to improve our reliability through summer operation we will also be adding the following objectives to our work:

- Determine optimal design parameters for the Zenon system that will generate stable ZeeWeed® membrane performance.
- Demonstrate that the ZeeWeed® Membrane Pre-treatment System will produce high quality effluent and meet applicable standards.
- Develop effective cleaning regimes, including type of chemicals and minimum time between cleanings.

Although advanced pretreatment systems such as membranes have had limited application in natural seawater systems, they show great promise for improving the reliability and affordability of seawater desalination plants. This is an excellent opportunity to help the ADC both operate more reliably and move the state of the art forward.

3.4 Cost Estimating Procedures

A present value analysis model, which accounts for both capital and operating costs, is developed and used to establish the most affordable operating condition. The present value analysis model is operated at the completion of the flux/recovery variation tests, presented previously in **Table 3.2**, to establish the condition that will be operated for the remaining two weeks. Only those conditions that demonstrate the ability to meet water quality standards for TDS and boron during the flux/recovery variation tests are considered for the most affordable operating condition. As discussed previously, the conditions for the present value analysis model were established as part of the testing protocol. These conditions are presented in **Table 3.7**.

As noted in **Table 3.8,** capital costs are determined under the assumption that the SWRO facilities would be co-located with a power plant. Therefore, capital costs developed do not include any new intake or outfall facilities. Pretreatment was considered similar to the demonstration scale test equipment, however, media filters were estimated in accordance with the deep bed filter concepts use for the Point Lisas SWRO facility in Trinidad (i.e., 4 gpm/ft^2, 5-ft anthracite, 2.5-ft sand, 2-ft garnet).[7] Such a design is assumed to be more compatible with challenging raw water qualities (i.e., than the ADC's demonstration scale media filters), such as those associated with red tide events.

Project Size	50 MGD	**Intake/High Service Pump Motor Eff.**	90%
Capital Cost [1]	Determined with WTCOST Model and Manufacturer Quotes	**RO Process Energy Demand**	Study data[2]
		RO Membrane Life	Refer to **Table 4.5**
Electrical Systems	12% of Capital Cost	**RO Membrane Element Cost**[3]	$475 to $600

Instrumentation & Control	10% of Capital Cost	**RO Pressure Vessel** [4]	$8000
Project Life	30 years	**Sodium Hypochlorite Dose (pretreatment)**	2 mg/L
Bond Payment Period	30 years	**Sodium Hypochlorite Cost**	$1.2/lb.
Interest	5%	**Sodium Bisulfite Dose**	4.6 mg/L
Construction Contingencies	15% of capital cost	**Sodium Bisulfite Cost**	$0.3/lb.
Contractor OH&P	10% of capital cost	**Cartridge Filter Loading Rate**	3 gpm/10-in.
Engineering & Const. Mgmt.	25% of capital cost	**Cartridge Filter Cost**	$5/10-in.
Permitting Cost	$10-million	**Cartridge Filter Life**	1000 hours
Annual Maintenance Costs	1.5% of capital cost	**Carbon Dioxide Dose**	16 mg/L
Labor	25 operators @ $55,000/yr ea.	**Carbon Dioxide Cost**	$0.04/lb
Power Costs	$0.08 per kW-hr	**Lime Dose**	44 mg/L
Intake Pump TDH	200 ft H_2O	**Lime Cost**	$0.05/lb.
High Service Pump TDH	200 ft H_2O	**Sodium Hypochlorite Dose (finished water)**	1.5 mg/L
Intake/High Service Pump Eff.	75%		

Note: O&M does not include administrative, laboratory, legal, reporting or management fees since these costs vary widely.

1 Includes intake pump station, prechlorination/dechlorination systems, ferric chloride systems, media filtration, media filter backwash system, filtered water lift station, cartridge filters, SWRO equipment, RO bldg., permeate flush system, clean-in-place system, transfer pump station, process piping, yard piping, lime system, carbon dioxide system, chlorination system, high service pump station, site work.

2 Power meter readings

3 SW30HR-380 = $475/ea.; SW30XLE-400*i* = $600/ea.; SW30HR LE-400*i* = $500/element.

4 Installed, includes all ancillary piping, frames and fittings.

Table 3.7 Present value analysis conditions

	Flux					
	6 GFD		**7.5 GFD**		**9 GFD**	
Recovery	**CARR**[1]	**Membrane Life**	**CARR**[1]	**Membrane Life**	**CARR**[1]	**Membrane Life**
35%	7%	6.5 yrs	8%	6.25 yrs	9%	6 yrs
42.5%	9%	6 yrs	10%	5.75 yrs	11%	5.5 yrs
50%	11%	5.5 yrs	12%	5.25 yrs	13%	5 yrs

1 Cumulative Annual Replacement Rate (CARR). The percentage of membrane elements that would be replaced to maintain a performance requirement (i.e., permeate quality and energy) for a 5 year warranty.

Table 3.8 RO Membrane life and annual replacement rate

3.5 Quality Assurance and Quality Control

The ADC's quality assurance program consists of the following elements:

- Review of the testing protocol by all ADC members to establish testing procedures and cost estimating methods before conducting any of the work. This is done to ensure that the data does not influence the tests results or conclusions.
- Hydraulic data recorded both manually and automatically to compare and resolve discrepancies.
- Power data is recorded by two separate power meters. Data is compared to resolve discrepancies and provide assurance that data is accurate.
- Water quality data analyzed according to EPA or *Standard Methods* procedures, including quality control.

- Final reporting prepared by a licensed professional engineer with an ethical duty to act in the public's interest.
- Peer review of present value model and final reporting. Peer reviewers are independent, third parties such as utility/agency members of the ADC and/or their consultants.

4.0 RESULTS AND DISCUSSION

4.1 Raw Water Quality

Typical seawater quality tested during Phase I is summarized in **Table 4.1**. As noted, the SWRO average feed water temperature was 15.2 ^{o}C, which is cooler than the water that would typically be fed to an SWRO water treatment plant from a once through cooling system. The ADC's data should therefore be taken in the context of this information.

Parameter	Average	Parameter	Average	Parameter	Average
Temperature	15.2 ^{o}C	Calcium	395 mg/L	Bicarbonate	135 mg/L
Total Dissolved Solids	31,688	Magnesium	1,230 mg/L	Chloride	19,345 mg/L
Conductivity	49,524 mhos	Sodium	10,370 mg/L	Sulfate	2,090 mg/L
pH	8.0	Potassium	340 mg/L	Fluoride	< 25 mg/L
Turbidity	1.8 NTU	Barium	0.21 mg/L	Bromide	< 125 mg/L
Boron	4.82 mg/L	Strontium	7.2 mg/L	Silica	6.85 mg/L
		Aluminum	0.21 mg/L		

Table 4.1 Average seawater quality

4.2 SWRO System Performance (To be completed)

Results from Phase II testing will begin during testing that should start in May 2007.

- *Permeate Water Quality*
- *Energy Efficiency*
- *Specific Power*
- *Estimated Costs*

5.0 ACKNOWLEDGEMENTS

The authors would like to acknowledge the members of the ADC for their material, technical and financial support in completing this work.

6.0 REFERENCES

1. United Nations Environment Programme. 2003. *World Water Development Report.*
2. Shirley Skeel. 2003. Is It Time for Desalination? A Piece of the Answer - Maybe. *California Coast & Ocean*. 19:3 (31-36).
3. D'Aquino, R. 2003. A Wake-up Call in Water Management. *Chemical Engineering Progress*. 99:3 (10-14).
4. Moch, I. And C. Harris. What Seawater Energy Recovery Systems Should I Use? - A Modern Comparative Study". Proc. 2002 IDA World Congress. Bahrain, March 2002.
5. Alspach. B and I. Watson. Sea Change. *Civil Engineering*. Vol. 74, No. 2, February 2004.
6. L.S. Clesceri, A.E. Greenburg, and A.D. Eaton. 1998. Standard Methods for the Examination of Water and Wastewater, 20th Edition. APHA, AWWA, WEF.

7. Trussell, R.R., J. Jacangelo and R. Cass. 2004. Design and Performance of the Pretreatment for the Point Lisas Desalter. Proc. 2004 AWWA Annual Conference. Orlando, FL.
8. Voutchkov, N. 2006. Application of Ultrafiltration/Microfiltration as Pretreatment for Seawater Desalination. Proc. NWRI Microfiltration IV Conference, City of Orange, CA.
9. Irwin. K.J. and J.D. Thompson. 2003. Point Lisas SWRO Plant Trinidad - First Year Success. The International Desalination & Water Reuse Quarterly. 13:3 (12-16).
10. Liberman, B. 2004. The Importance of Energy Recovery Devices in Reverse Osmosis Desalination, from *The Future of Desalination in Texas*, Volume 2. Texas Water Development Board. Austin, Texas.
11. Moch, I. 2000. The Case and Feasibility for High Recovery Seawater RO Systems. International Desalination and Water Reuse Quarterly. 10:3 (44-51).
12. MacHarg, J. 2001. Exchanger Tests Verify 2.0 kWhr/m3 SWRO Energy Use. International Desalination and Water Reuse Quarterly. 11:1.
13. Prato, T., E. Schoepke, L. Etchinson, T. O'Brien, B. Hernon, K. Perry, and M. Peterson. 2000. Production of High Purity Water from Seawater. Proc. 20000 North American Biennial Conference of the American Desalting Association. South Lake Tahoe, Nevada.
14. Chellam, S., C.A. Serra, M.R. Wiesner. 1998. Estimating Costs for Integrated Membrane Systems. J.AWWA. 90:11 (96-104).
15. Bartels, C., R. Bergman, M. Hallan, L. Henthorne, P. Knappe, J. Lozier, P. Metcalfe, M. Peery, and I. Shelby. 2005. Membrane Consortium Analysis of Large RO/NF Element Diameters. Proc. 2005 AWWA Membrane Technology Conference. Phoenix, AZ.

DESAL08-30 31 32 33 34 36-39 11/20/08 3:14 PM Page 1

ADC baseline tests reveal trends in membrane performance

John MacHarg, Affordable Desalination Collaboration, **Thomas F Seacord**, PE, and **Bradley Sessions**, Carollo Engineers, PC

The Affordable Desalination Collaboration (ADC) has completed a major milestone in its test program that profiles the state-of-the-art performance for seawater reverse-osmosis (SWRO) technology. This testing ran over two years and involved operating seven sets of standard 8 in diameter membranes in seven-element pressure-vessels including:

- FilmTec SW30HR-380, SW30XLE-400i, SW30HRLE-400i, Internally Staged Design (ISD) Hybrid
- Koch TFC 2822HF-400
- Hydranautics SWC5
- Toray TM820E-400.

All other associated equipment and designs used in these tests also represented state-of-the-art, off-the-shelf technology. Key system variables of recovery and flux ranged from 35-50% and 6-10 gallons per day (gpd) per square foot of membrane (gfd). The testing provides a body of data that can be used to define and project the performance of state-of-the-art SWRO for Southern California applications as well as a benchmark for the performance of new technologies and designs.

ADC Pilot System

The ADC demonstration plant was designed to produce between 48,100 to 75,600 gpd (182-286 m^3/d) of permeate flow using existing full-scale technologies that minimized power consumption.

Figure 1 presents a process flow diagram for the ADC's SWRO plant located at the US Navy Seawater Desalination Test Facility in Port Hueneme, California. The process uses an open ocean intake, media filters, 5 micron bag filter, a high-efficiency positive-displacement pump and an isobaric energy-recovery device. The design criteria for these components are presented in Table 1 (*see page 32*).

Test protocol

Demonstration-scale tests of each membrane set occurred in approximately seven 9-week phases. As presented in Table 2 (*see page 32*), each phase of testing has the following features.

The membranes were allowed to stabilize ("ripening") for two weeks at baseline conditions of 7.5 gfd and 42.5% recovery was performed. This "ripening" period ensured that the membrane and system performance were operating satisfactorily and at steady-state conditions.

The ADC tested each membrane set at a predetermined matrix of 9 and 12 fluxes and recovery points for ADC I and II respectively. ADC I tested 3 sets of FilmTec membranes at flux rates of 6, 7.5 and 9 gfd and 35, 42.5 and 50% recovery. ADC II extended and optimized this test regime to include 6, 7.5, 9 and 10 gfd at 42.5, 46 and 50% recovery according to Table 2.

The ADC eliminated the 35% recovery point from ADC II testing due to the results from ADC I that showed significantly higher costs at this lower recovery point . Finally, in the case of the FilmTec ISD configuration, the ADC tested a point at 9 gfd and 55% recovery, according with the manufacturer's request.

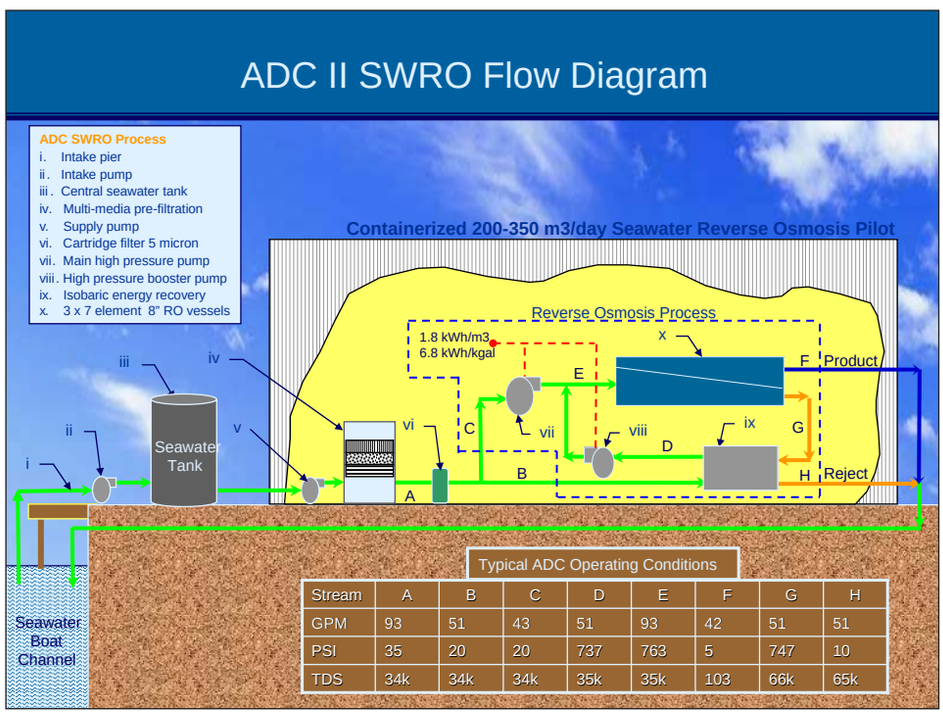

Stream	A	B	C	D	E	F	G	H
GPM	93	51	43	51	93	42	51	51
PSI	35	20	20	737	763	5	747	10
TDS	34k	34k	34k	35k	35k	103	66k	65k

Figure 1. Flow Diagram - ADC's Demonstration Scale SWRO plant

Each data point from the above flux-and-recovery matrix was input to a net present value (NPV) model to determine the most affordable point (MAP) of operation. As part of determining the MAP, a specific set of water-quality goals was established based on EPA Secondary Water Treatment Goals (TDS < 200 mg/l and boron < 1.045 mg/l).

In some cases, where these goals were not achieved at any of the matrix operating points, the ADC simply ran the demonstration at the MAP, noting the higher TDS and boron figures. Note that the test protocol outside the NPV analysis provides general water-quality goals of TDS < 500 mg/l and boron < 1.45 mg/l, to account for applications that may have less stringent water-quality requirements.

At the end of the 12-point matrix testing and at the end of the 2-3 week MAP testing, the baseline conditions of 42.5% recovery and 7.5 gfd were retested to confirm that membrane and system performance had remained stable from the first two weeks of testing.

ADC Mission and Members

The mission of the Affordable Desalination Collaboration (ADC) is to demonstrate affordable, reliable and environmentally responsible reverse-osmosis (RO) desalination technologies and to provide a platform by which cutting-edge technologies can be tested and demonstrated on their ability to reduce the overall cost of the seawater reverse-osmosis (SWRO) treatment process.

The ADC is a non-profit organization comprising the following group of industry-leading companies, state and government agencies:

- California Department of Water Resources
- California Energy Commission
- Carollo Engineers
- City of Santa Cruz Water Department
- Energy Recovery, Inc.
- FilmTec Corporation
- GE Zenon
- Hydranautics – A Nitto Denko Company
- Koch Membranes
- Metropolitan Water District of Southern California
- Naval Facilities Engineering Service Center
- Pentair Water Treatment - CodeLine Division
- Poseidon Resources
- Sandia National Laboratories
- Toray Membranes
- U.S. Bureau of Reclamation
- West Basin Municipal Water District

RESULTS AND DISCUSSION

Raw Water Quality

Raw feed water was taken from an open intake at the end of a pier located in the Port Hueneme shipping channel fed by the Pacific Ocean. Typical seawater quality tested during this study is summarized in Table 3 (*see page 32*).

As noted, the SWRO average feed water temperature was 59°F/15°C with a high of 68°F/20°C and a low of 54°F/12°C. It should be noted that once through cooling applications using a co-

ENGINEERED SOLUTIONS

Put Union Pump's aftermarket solutions to work for you

canada

england

france

singapore

united states

providing service technology and OEM parts quality for the oil and gas, petrochemical, nuclear power and generation, and desalination industries.

With Service Centers in the USA, Canada, France, and the United Kingdom:

USA: • Baton Rouge, LA • Houston, TX • Battle Creek, MI • Downey, CA
CANADA: • Burlington, Ontario • Calgary, Alberta • Edmonton, Alberta
FRANCE: • Annecy
UNITED KINGDOM: • Penistone

UNION Pump
A Textron Company

Log onto www.unionpump.com for further details on how you can put Union Pump's aftermarket solutions to work for you.

For further information please see Advertiser Contact List on page 64

located power plant intake would have higher temperatures, which would lead to different permeate qualities and energy consumptions than those reported by the ADC.

Highest temperatures tended to occur in the fall months, while the lowest temperatures were seen in spring. Feed salinity and boron remained very stable over the three years of recorded data with an average of 35,000 mg/l TDS and 5 mg/l boron.

As shown in Figure 2, ADC I tested three sets of FilmTec membranes exclusively and ADC II tested one set of membranes from each of the leading manufacturers including the Toray – TM820E-400, Koch – TFC 28822HF-400, Hydranautics – SWC5 and FilmTec (ISD) Hybrid Configuration.

Parameter		Unit	Value
Media Filter			
	Loading Rate	gpm/ft^2	3 to 6
Depth/Grain Size/U.C. of Anthracite		in/mm/-	18 / 0.85-0.95 / <1.4
Depth/Grain Size/U.C. of Sand		in/mm/-	10 / 0.45-0.55 / <1.4
Depth/Grain Size/U.C. of Gravel		in/mm/-	6 / 0.3 / <1.4
Cartridge Filter			
	Cartridge Specs		22 each, #2, 5 micron x 40 in
	Loading Rate	gpm/10-in	~1
Membrane System			
	Models		**ADC I Test** FilmTec™ SW30HR-380, FilmTec™ SW30XLE-400i, FilmTec™ SW30HR LE-400i **ADC II Test** Koch TFC 2822HF-400 Hydranautics SWC5 FilmTec™ ISD Hybrid Toray TM800E-400
	Diameter	inch	8
	Elements per Vessel	No.	7
	Vessels	No.	3
High Pressure Pump	Type Model		Positive Displacement David Brown Union, Model TD-60
	TDH	ft (psig)	1385 to 2305 (600 to 1000)
Energy Recovery	Type Model		Pressure Exchanger Energy Recovery, Inc. Model PX-70S
PX Booster Pump	Type Model		Centrifugal Energy Recovery, Inc. Model HP-8504
	TDH	ft (psig)	70 to 115 (20 to 50)

Table 1. Design Criteria for ADC's SWRO Demonstration Scale Equipment

Flux, gfd	6			7.5			9			10		
Recovery, %	42.5	46.0	50.0	42.5	46.0	50.0	42.5	46.0	50.0	42.5	46.0	50.0
HP pump, gpm	36.5	36.5	36.5	45.3	45.3	45.3	54.0	54.0	54.0	54.0	54.0	54.0
PX Booster Pump, gpm	45.9	39.6	33.5	57.7	49.9	42.3	69.5	60.1	51.0	69.5	60.1	51.0
Permeate, gpm	35.0	35.0	35.0	43.8	43.8	43.8	52.5	52.5	52.5	52.5	52.5	52.5
PX Inlet, gpm	45.9	39.6	33.5	57.7	49.9	42.3	69.5	60.1	51.0	69.5	60.1	51.0
Concentrate, gpm	47.4	41.1	35.0	59.2	51.4	43.8	71.0	61.6	52.5	71.0	61.6	52.5

Table 2. ADC II 12-Point Flux-and-Recovery Matrix

	Temp. °F / °C	Feed pH	Feed salinity Ktds	Feed Boron mg/l	Raw Feed Turbidity NTU	RO Feed Turbidity NTU	RO Feed SDI
Low	54 / 12	7.22	33.40	3.90	0.24	0.03	1.8
High	68 / 20	8.75	36.81	5.53	12.00	0.25	11.4
Average	59 / 15	7.88	35.39	4.78	1.45	0.07	4.0

Table 3. Sea/Feed Water Quality

Feed Water Turbidity and Pretreatment Performance

The pretreatment process for the ADC's demonstration-scale equipment included in-line coagulation and media filtration, followed by 5 micron cartridge filtration (see criteria established in Table 1).

Initially during ADC I, in 2005, Southern California experienced localized and prolonged periods of red tides and extensive algae blooms throughout the summer. Red tides tend to occur most frequently in the spring and fall months and average 1-2 weeks in duration. The summer of 2005 was recognized as an anomalous period.

By contrast, from the start of ADC II in August 2007 until July 2008, the ADC has experienced approximately eight discrete days in which satisfactory water quality could not be achieved using the basic multimedia system. In full-scale applications, more robust designs would be applied to ensure that water quality and continuous operation could be maintained through these challenging but brief events that occur in Southern California coastal waters.

In general, the ADC pretreatment system has performed very well for the specific application. On average, the media filtration system has reduced feed water turbidity by 95% and yielded an average RO feed water SDI of approximately 4.0. The 5 micron string-wound cartridge filtration system was used at an approximate one gallon per minute (gpm) per 10 in of equivalent cartridge length. Cartridge differential pressures at baseline conditions resulted in differential pressure increases at a rate of approximately one psi per month of operation.

Membrane Performance

Over a period of three years, the ADC tested seven different membrane sets as outlined in Table 1. The data demonstrate that low energy

consumption and satisfactory water quality can be achieved with all the leading membrane manufactures products.

The testing was performed consecutively through varying water quality conditions and should not be considered as side-by-side testing. The graphs represent the actual operating data that has not been normalized.

Therefore, the following results should not be used to make precise "apples to apples" comparisons of each manufacturer's membrane performance. Instead, they provide a benchmark for SWRO energy consumption for Southern California and reveal general trends in membrane performance.

Figure 2. Feed Water Salinity, Boron and Temperature

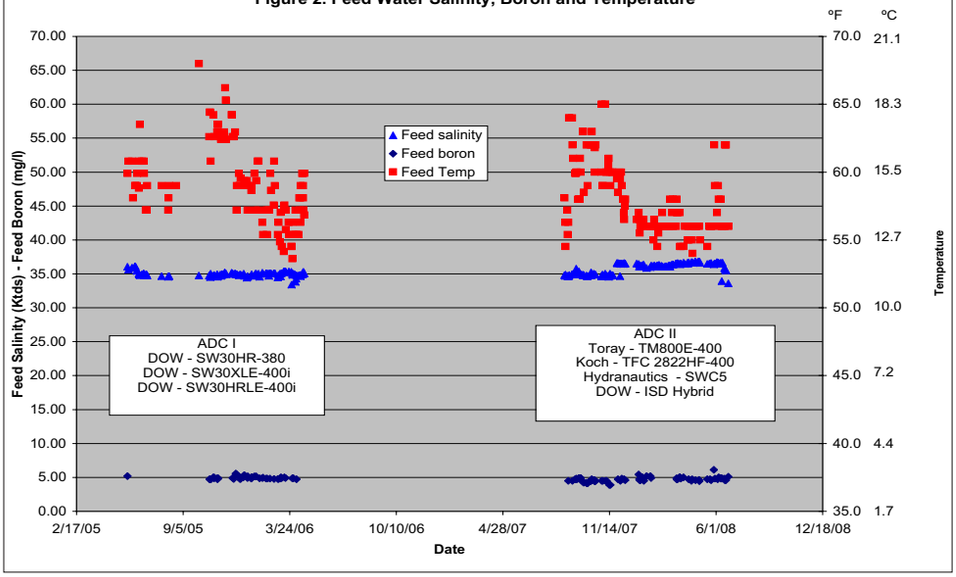

Permeate Water Quality

The impact of flux and recovery on permeate boron and TDS concentrations is presented in Figures 4.1 and 4.2 (page 34). The data were collected over the flux and recovery points shown in Table 2.

In the interest of saving space, we are only showing the graphs from 6 and 9 gfd. The complete data set can be found on the ADC web site www.affordabledesal.com on the Data Page. Notable trends include the following:

- Due to the scientific principles of diffusion, when flux increases, permeate TDS and boron concentrations decrease; when recovery increases, permeate TDS and boron concentrations increase.
- The low-energy membrane elements (SW30XLE-400i, ISD Hybrid and TFC 2822HF-400) demonstrated the ability to produce acceptable permeate quality with respect to TDS and boron. The higher rejection membrane models (SW30HR-380, SW30HRLE-400i, TM800E-400 and SWC5) demonstrated better permeate quality but at the expense of higher energy consumption, with the exception of the Hydranautics SWC5. The SWC5 demonstrated the best water quality of all the membranes that were tested, while being a relatively low- to mid-range energy consumer.

Figure 3. Feed Water Turbidity and Pre-treatment Performance

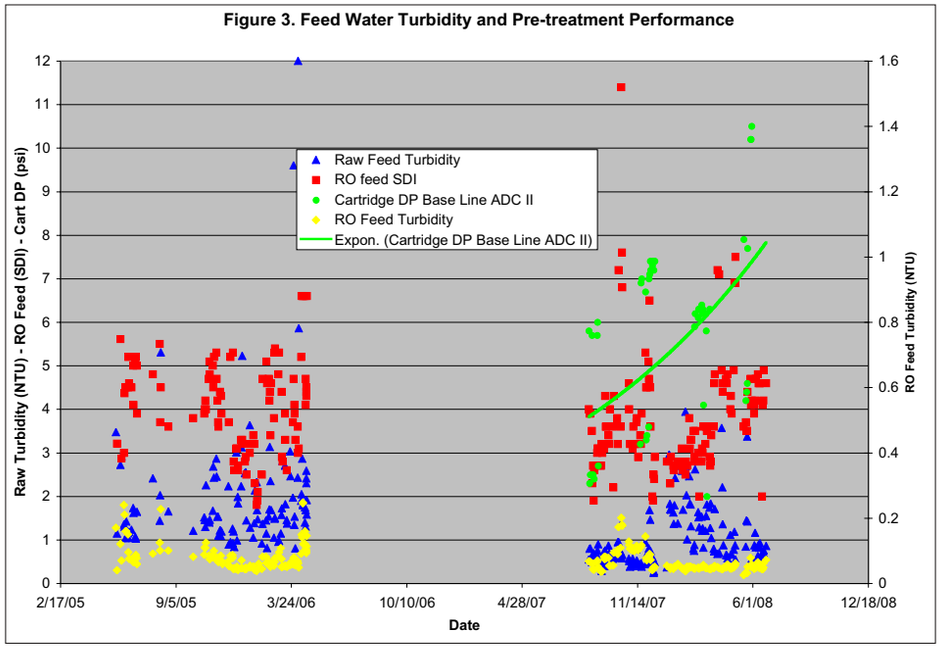

- The low-energy, low-rejection membranes produced permeate TDS levels approximately twice the high-energy, high-rejection membranes.

In some cases, using the low-energy membranes at the lower flux rates, the general water quality goals of TDS < 200 mg/l and boron < 1.045 mg/l could not be met. It should be recognized in these cases that, if the ADC test had been fed a higher temperature seawater, more typical of a co-located SWRO plant taking warm water from a once-through-cooling power-plant, the low-energy membranes may not be the best choice even at their lower cost for water.

Further testing is needed to quantify the true impact of temperature on these results. Additionally, SWRO system designers should consider public issues related to water quality, in addition to water costs, when selecting design conditions such as flux, recovery and membrane elements.

Energy Consumption

The ADC's demonstration-scale plant used off-the-shelf, state-of-the-art pumps and energy-recovery technology that are comparable in efficiency and energy consumption to the largest plants being designed today (*ie* approximately 50

MGD (190,000 m^3/d)). We will dedicate a section later in this article to explain how the ADC's results translate to various other plant sizes.

Figures 5.1 and 5.2 present specific power for each of the membranes tested. The following observations can be made based upon these graphs:

- As expected, the low-energy membrane elements (SW30XLE-400i, ISD Hybrid and TFC 2822HF-400) required less energy than the other membranes, but at the expense of permeate water quality.
- The lowest energy consumption was achieved with the FilmTec SW30XLE-400i membrane and was 6.0 kWh/kgal (1.58 kWh/m^3) @ 42% recovery and 6 gfd. The ADC considers this to be a world record for an SWRO system operating at commercially viable recovery and flux rates.
- Though specific power for the SWRO process generally increases with recovery, the total energy required for treatment decreases with increasing recovery. This is due to the increased volume of raw feed water that must be pumped and treated at lower recovery rates to obtain the same volume of permeate. Therefore, these graphs show the importance of analyzing a facility process as a whole, and not just the SWRO specific power.
- ADC total treatment energy demonstrated a range of 10.4 to 11.3 kWh/kgal (2.75-2.98 kWh/m^3) at the most affordable point for a 50 MGD design.

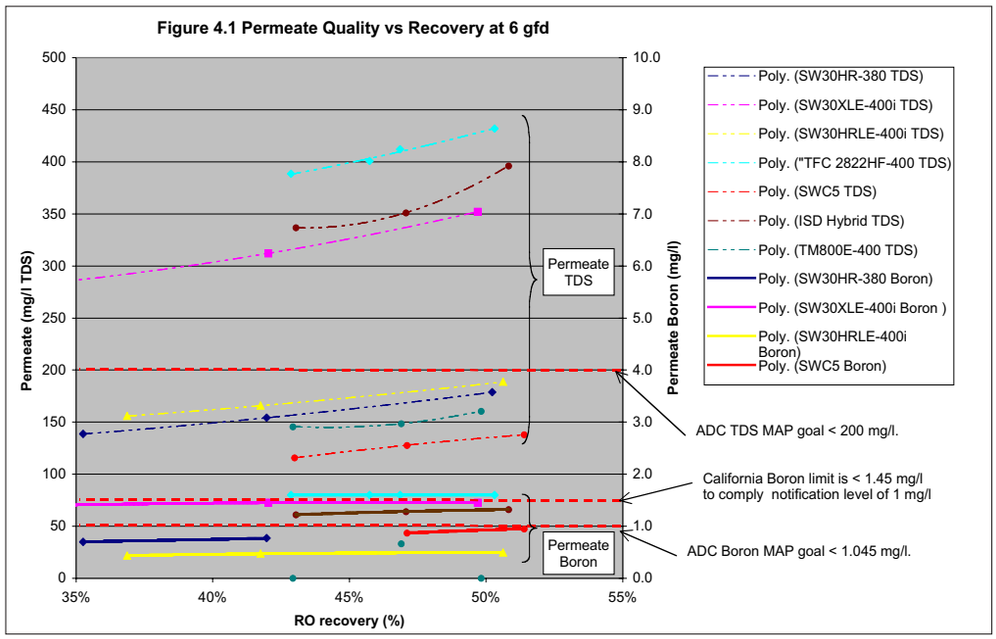

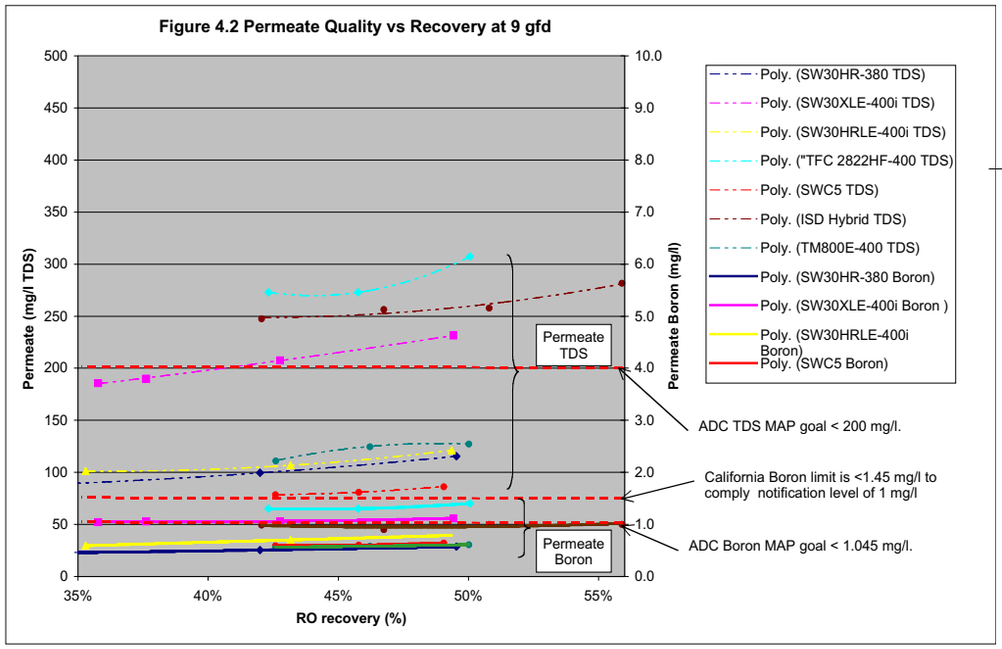

50 MGD Conceptual Costs

Cost Estimating Procedures

A net-present-value (NPV) analysis model, which accounts for both capital and operating costs, was developed and used to establish the most affordable operating point (MAP). The NPV analysis model was used at the completion of the flux/recovery variation tests, presented previously in Table 2, to establish the MAP for the demonstration test.

As mentioned earlier, as part of determining the MAP, the ADC also considered a specific set of water-quality goals of TDS < 200 mg/l and boron < 1.045 mg/l for the MAP. In some cases where these goals were not achieved at any of the matrix operating points, the MAP was demonstrated noting the higher TDS and boron figures.

Some of the assumptions and conditions for the present value analysis model are presented in Table 4. A complete version of the model can be found on the ADC's web site on the Data Page at www.affordabledesal.com.

As noted in Table 4 (*see page 36*), capital cost was determined under the assumption that the SWRO facilities would be co-located with a power plant. Therefore, the capital costs developed do not include any new intake or outfall facilities.

Pretreatment was considered similar to the demonstration-scale test equipment, however, media filters were estimated in accordance with the deep-bed filter concepts use for the Point Lisas SWRO facility in Trinidad (ie, 4 gpm/ft^2, 5-ft anthracite, 2.5-ft sand, 2-ft garnet).7 Such a design is assumed to be more compatible with challenging raw water qualities such as those associated with red tide events.

DESAL08-30 31 32 33 34 36-39 11/20/08 3:14 PM Page 6

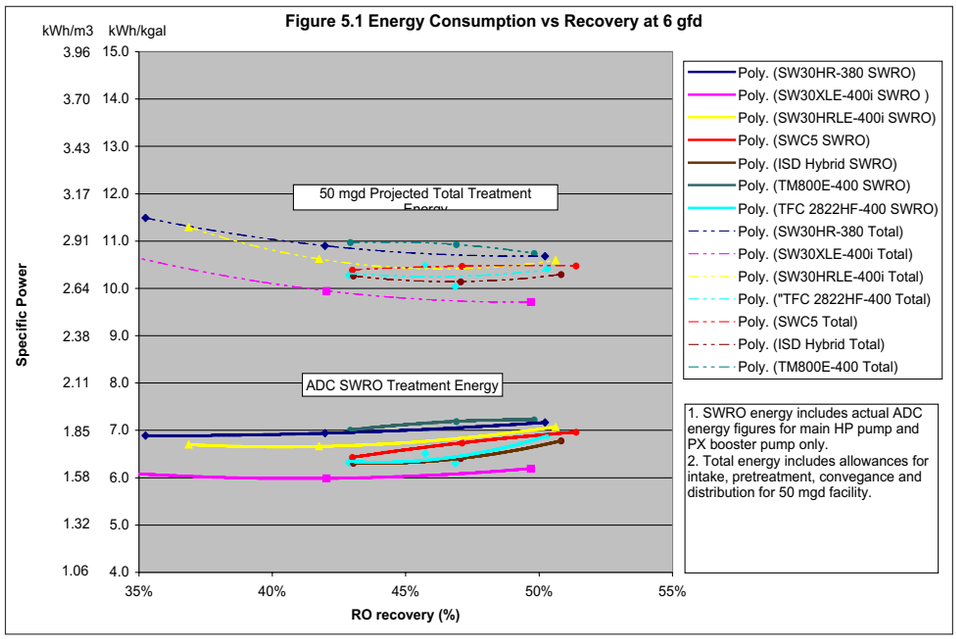

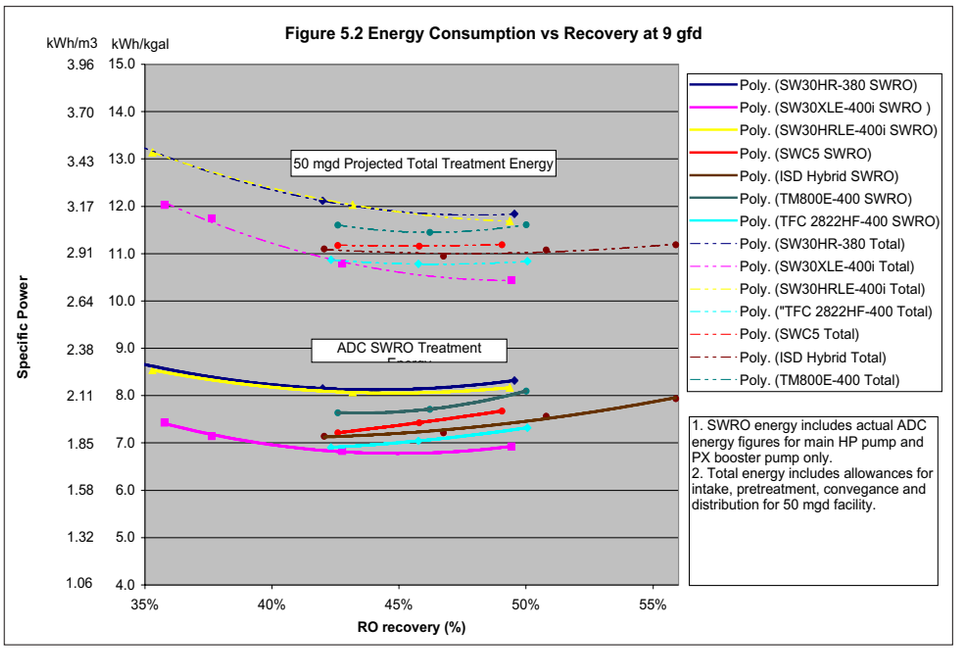

Project Size	50 MGD	Intake/High Service Pmp Motor Eff.	95%
Capital Cost [1]	Determined with WTCOST Model and Manufacturer Quotes	SWRO Process Energy Demand	Study data[2]
		Membrane Life	Refer to **Table 5**
Electrical Systems	12% of Capital Cost	Membrane Element Cost	$550
Instrumentation & Control	10% of Capital Cost	Pressure Vessel [3]	$8547
Project Life	30 years	Sodium Hypochlorite Dose (pretreatment)	2 mg/L
Bond Payment Period	30 years	Sodium Hypochlorite Cost	$1.2/lb.
Interest	5%	Sodium Bisulfite Dose	4.6 mg/L
Construction Contingencies	15% of capital cost	Sodium Bisulfite Cost	$0.3/lb.
Contractor OH&P	10% of capital cost	Cartridge Filter Loading Rate	3 gpm/10-in.
Engineering & Const. Mgmt.	25% of capital cost	Cartridge Filter Cost	$5/10-in.
Permitting Cost	$10-million	Cartridge Filter Life	1000 hours
Annual Maintenance Costs	1.5% of capital cost	Carbon Dioxide Dose	16 mg/L
Labor (burdened)	25 operators @ $96,250/yr ea.	Carbon Dioxide Cost	$0.04/lb
Power Costs	$0.11 per kW-hr	Lime Dose	44 mg/L
Intake Pump TDH	200 ft H_2O	Lime Cost	$0.05/lb.
High Service Pump TDH	200 ft H_2O	Sodium Hypochlorite Dose (finished water)	1.5 mg/L
Intake/High Service Pmp Eff.	80%		

Note: O&M does not include administrative, laboratory, legal, reporting or management fees since these costs vary widely.
Includes intake pump station, prechlorination/dechlorination systems, ferric chloride systems, media filtration, media filter backwash system, filtered water lift station, cartridge filters, SWRO equipment, RO bldg., permeate flush system, clean-in-place system, transfer pump station, process piping, yard piping, lime system, carbon dioxide system, chlorination system, high service pump station, site work.
2 Power meter readings
3 Installed, includes all ancillary piping, frames and fittings.
4 Land cost are not included in the Present Value Analysis

Table 4. Present Value Analysis Conditions

Current operation of the ADC demonstration pilot includes operation of a Zenon ultrafiltration (UF) pretreatment system, and future reporting may include an analysis of alternative pretreatment systems such as UF and media filters.

Table 5 (page 37) establishes the expected membrane life and the cumulative annual replacement rate (CARR) with respect to recovery and membrane flux. The expected membrane life is used to estimate membrane replacement cost. Membrane replacement resulting from warranty maintenance by the manufacturer was not part of the replacement cost.

Cost Estimates

Estimated cost for the ADC's conceptual 50 MGD facility are presented in Figures 6.1 and 6.2. The costs include the estimated capital cost as well as the operation and maintenance cost over the range of flux and recovery conditions tested for each membrane during the ADC's demonstration study.

As presented previously, these costs assume that the facility can share an existing open ocean intake, in-line coagulation, deep-bed media filtration, six SWRO trains with dedicated pumps, lime and carbon-dioxide post-treatment, new finished water-pumping facilities, and the utilization of an existing ocean outfall.

The following findings are drawn from these cost estimates:

- There is generally a downward trend in costs per unit volume as recovery increases due to the cost associated with feedwater pumping and pretreatment. A recovery rate of 50% was demonstrated to be the lowest estimated total water cost. Operating at a recovery of 50% is contrary to the recommendation of some in the industry that advocate lower recoveries to maximize membrane life, reduce cleaning frequencies and produce the highest quality permeate.

However, the impact of high recovery on membrane replacement costs, cleaning frequencies and permeate quality are factored into the ADC's cost estimate using the CARR values presented previously in Table 5. The

DESAL08-30 31 32 33 34 36-39 11/20/08 3:14 PM Page 7

CARR accounts for the annual replacement of membranes to maintain system performance with respect to power and permeate quality.

Therefore, it can be concluded that reducing capital costs associated with pretreatment are estimated to be more influential on total water costs than designing an SWRO process with long membrane life, low cleaning frequencies, and the lowest SWRO energy consumption.

- At the manufacture's request, the ADC operated the FilmTec ISD Hybrid membranes at 9 gfd and at an extended 55% recovery. This extended recovery point achieved an estimated 3% savings in the total treatment costs. Furthermore, the curve still trends downward indicating additional savings are possible at higher recoveries.
- Figure 7 demonstrates how higher flux resulted in lower capital cost. However, these costs savings were offset by an increase in operating costs resulting in almost no difference in the total treatment costs. Designers may choose higher flux rates to minimize capital costs and produce the best quality water even though power costs, membrane replacement costs and cleaning costs may increase as a result. Again, the ADC's costs presented in Figure 7 account for these added O&M costs resulting from higher flux rates using the CARR values presented in Table 5.
- Operation and maintenance (O&M) costs comprise approximately 45% of the total water cost. SWRO power consists of approximately 22% of the total water cost. This is a significant reduction over the industry's perception, where it is commonly believed that power costs represent 50% of the total water costs for an SWRO facility.

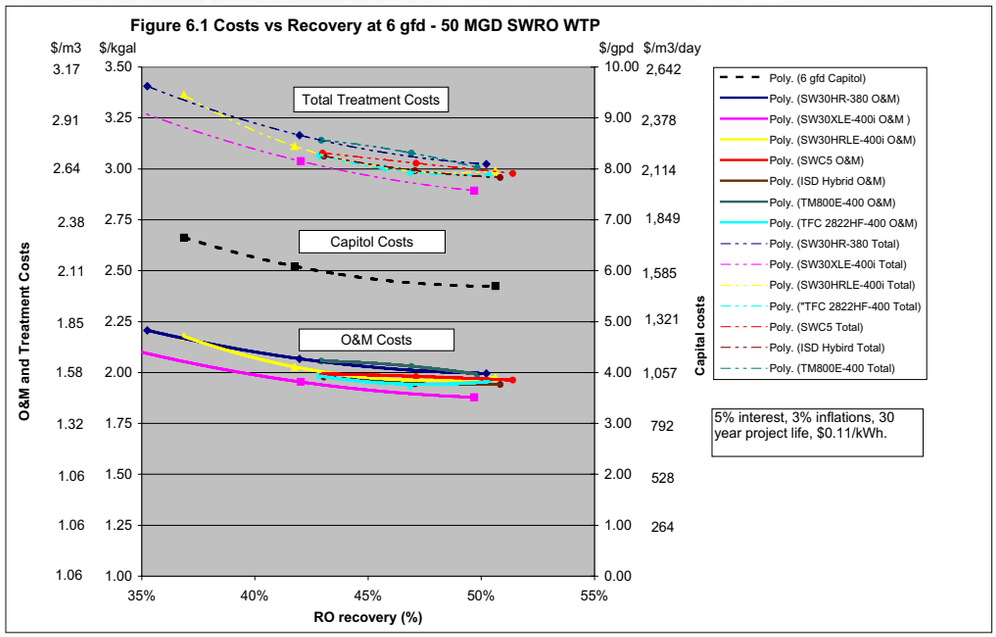

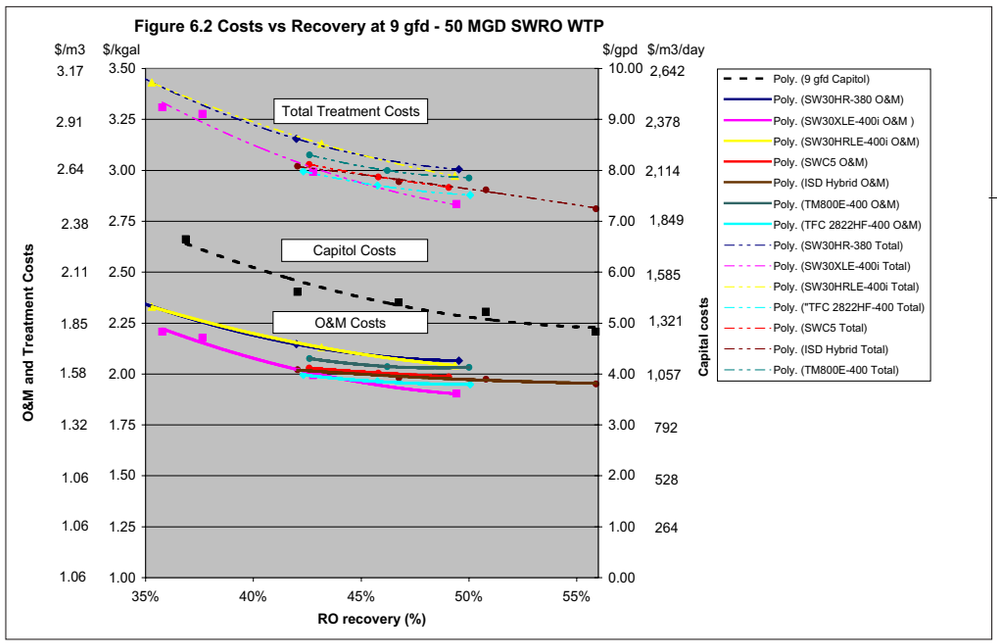

Recovery	Flux 6 GFD CARR[1]	Membrane Life	7.5 GFD CARR[1]	Membrane Life	9 GFD CARR[1]	Membrane Life
35%	7%	6.5 yrs	8%	6.25 yrs	9%	6 yrs
42.5%	9%	6 yrs	10%	5.75 yrs	11%	5.5 yrs
50%	11%	5.5 yrs	12%	5.25 yrs	13%	5 yrs

1. Cumulative Annual Replacement Rate (CARR). The percentage of membrane elements that would be replaced to maintain a performance requirement (i.e., permeate quality and energy) for a 5 year warranty.

Table 5. Membrane Life and Annual Replacement Rate.

ADC Data and Scale

The ADC demonstration plant employs a David Brown Union TD-60 positive-displacement main high-pressure pump that operates at very high efficiencies of 88-90%. Although positive-displacement plunger pumps operate at high efficiency, they cannot be employed in very large systems because of their high maintenance requirements and pulsating flows.

In the larger full-scale systems, centrifugal pumps with efficiencies between 65-88% are used. The achievable efficiency of a centrifugal pump depends on the size or flow rate of the pump, where lower flows typically will operate at lower efficiency compared to the larger pumps .

Table 6 (*page 38*) projects the total power consumption of a 0.3 MGD system that employs a 69% efficient centrifugal main high-pressure pump and

Energy consumption of various system capacities				
Treatment Step	**ADC MAP**	**0.3 mgd(2)**	**10 mgd(2)**	**50 mgd(2)**
RO Process	7.8 / 2.06 (1)	10.6 / 2.80	9.1 / 2.40	8.0 / 2.11
Intake (2)	2.17 / 0.57	2.01 / 0.53	1.74 / 0.46	1.72 / 0.45
Pre-filtration (2)	1.14 / 0.30	1.05 / 0.28	0.91 / 0.24	0.90 / 0.24
Permeate treatment (2)	0.25 / 0.07	0.23 / 0.06	0.17 / 0.04	0.16 / 0.04
Permeate distribution (2)	1.27 / 0.33	1.17 / 0.31	0.86 / 0.23	0.85 / 0.22
Total Treatment	12.6 / 3.33	15.1 / 3.99	12.8 / 3.38	11.6 / 3.06

1. MAP average value from the 4 membrane sets that met MAP water quality goals of <200 mg/l TDS and <1.045 mg/l Boron. 2. Projected values based on typical parameters and conditions. 3. kWh/kgal / kWh/m^3

Table 6. ADC Power Consumption and System Projections

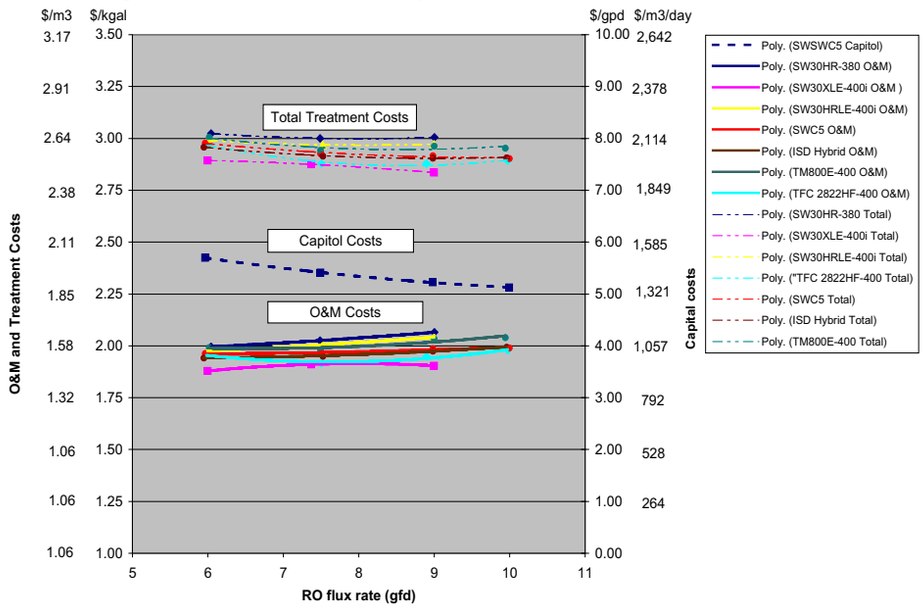

70% efficient intake and prefiltration pumps to be 15.1 kWh/kgal (3.99 kWh/m^3). By contrast, the 50 MGD projections use an efficiency of 88% for the main high-pressure pump and 80% for the intake and prefiltration pumps. In addition, the motors and control systems are generally more efficient for the largest systems resulting in a total treatment power of 11.6 kWh/kgal (3.06 kWh/m^3).

Figure 8 provides a graphical view of how the energy consumption of a system will vary with size. The largest systems have the potential to be even a more efficient than the ADC pilot because they can employ more efficient motors and control systems.

Table 7 provides figures on the associated key system parameters and performance from the ADC pilot with these values also projected over various system capacities.

According to the ADC's 50 mgd net present value model, the projected cost of water over the 4 MAP's ranged from $2.90-3.00/kgal ($0.77-$0.79/m^3) with an average of $2.95/kgal ($0.78/m^3).

CONCLUSIONS

The following results and conclusions can be made from the ADC's demonstration study data and a conceptual 50 mgd SWRO facility:

- Testing was performed consecutively and was not conducted as a side-by-side evaluation. Therefore the results should not be used to make direct performance comparisons of the manufacturers' membranes. The results provide a bench mark for SWRO energy consumption in Southern California.
- According to the performance data and NPV estimates, higher recovery consistently resulted in a projected lower total cost of water. Furthermore, the trend showed that costs could be reduced further by operating at higher recoveries than those tested in the ADC protocol.
- Though the RO specific power generally increases with recovery rate, the total energy required for treatment decreases with increasing recovery. This is due to the increased volume of raw feed water that must be pumped and treated at lower recovery rates to obtain the same volume of permeate.
- According to the performance data when analyzed by the NPV model, flux variations from 6-10 gfd were estimated to result in almost no change in the total treatment costs.
- Higher flux produced better water quality and it was estimated to have little effect on the total treatment costs.

The ADC has been able to demonstrate energy consumption for seawater desalination at levels of 10.4 to 11.3 kWh/kgal (2.75-2.98 kWh/m^3) at a projected total cost of $2.83-3.00/kgal ($0.75-$0.79/m^3). These energy levels and cost figures are comparable to other traditional sources. For example, in Southern California, the State Water Project, which transports water from Northern California to Southern California, consumes on average 10.4 kWh/kgal (2.75 kWh/m^3) . And in San Diego, California, end-users can pay more than $6.00/kgal ($1.58/m^3) . Therefore, Southern Californian seawater desalination is an affordable and reliable new source of high quality fresh water.

FUTURE STUDIES

In the future the ADC will be demonstrating new flow schemes to help increase the achievable recoveries of today's system using off-the-shelf components. In addition, the ADC plans

Process Variables	ADC MAP Average	Projections
System capacity, mgd	0.08	0.3-50
RO feed pressure, psi / bar	914 / 63	914 / 63
Flux, gfd	9.0	9.0
RO recovery, %	48%	48%
Permeate quality, TDS	119	119
Permeate Boron, mg/l	0.7	0.7
Raw water, TDS	35,640	35,640
Raw water temperature, °F / °C	60 / 15.5	60 / 15.5

Table 7. ADC Operating Parameters and Performance

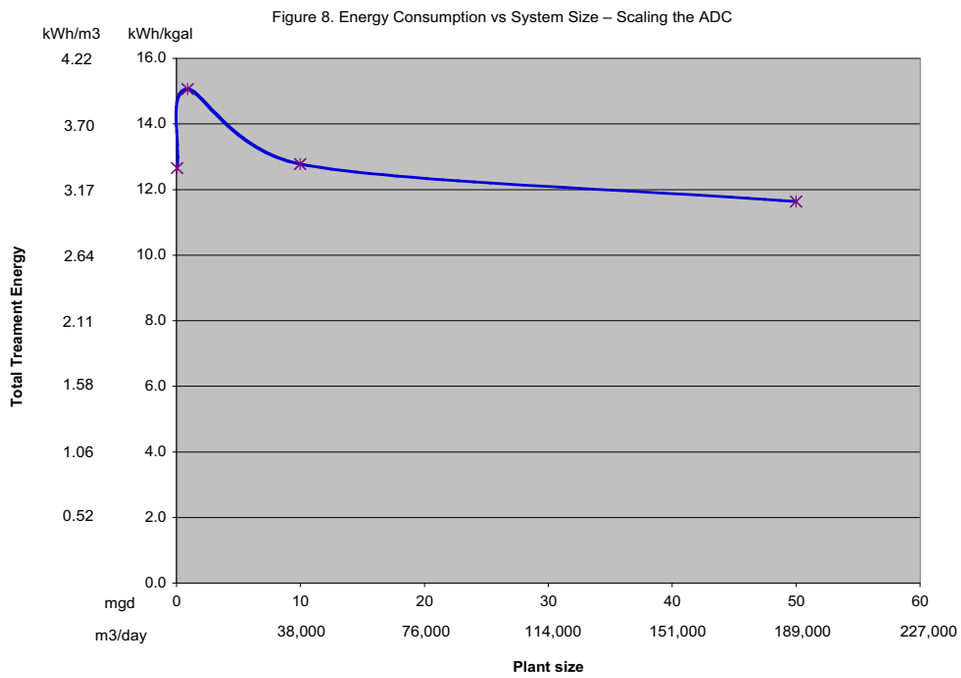

to test new prefiltration, pump and energy-recovery technologies to measure the ability of these new technologies to reduce the overall cost to produce water.

AUTHORS

John P MacHarg is Managing Director-CEO of The Affordable Desalination Collaboration and President of Ocean Pacific Technologies, Inc. Previously he was the General Manager of Energy Recovery Inc. where he was involved in the development, commercialization and marketing of pressure exchanger energy recovery technology for desalination systems. He was also a Vice President at Village Marine Technology where he worked in the design, manufacture and sales of packaged seawater desalination equipment. He has been working within the desalination industry for over 17 years.

Tom Seacord is an Associate and Project Manager with Carollo Engineers, P.C. and has been specifically dedicated for the past 10 years in the area of desalination. He is a licensed professional engineer and has a B.S. and M.S. degree in Civil Engineering from Clarkson University. Tom worked on planning, pilot testing, design, construction and start-up of desalination treatment plants in California, Florida, Kansas, Missouri, South Carolina, Texas and Utah. Tom is a current member of the AMTA Board of Directors and the current Chairperson of the Government Affairs Committee. He is a member of AMTA, SEDA, IDA, and AWWA.

He sits on the Board of Directors for the ADC.

Bradley Sessions has been with Carollo Engineers in Boise, Idaho for 2 years. Previously he worked throughout the Caribbean basin designing, building and operating SWRO facilities for Consolidated Water, Ltd. and was involved in the R&D of the DWEER energy recovery system with Desalco, Ltd.

PEER REVIEW

Gerry Filteau, Separation Processes, Inc.
Paige Gourley, Hydranautics Membranes
Phil Lauri, West Basin Municipal Water District
Rick Lesson, Koch Membranes
Victor Verbeek, Toray Membranes

REFERENCES

1. Seacord, T.F., J. MacHarg, and S. Coker. Affordable Desalination Collaboration 2005 Results. Proc. 2006 AMTA Conference. Anaheim, California.
2. Detailed NPV models can be found on the ADC Website Data Page.
3. MacHarg, J. 2001. Exchanger Tests Verify 2.0 kWh/m^3 SWRO Energy Use. *International Desalination and Water Reuse Quarterly*. Vol 11/No. 1
4. Proto, T., E. Schoepke, L. Etchinson, T. O'Brien, B. Hernon, K. Perry, and M. Peterson. 2000. Production of High Purity Water from Seawater. Proc. 2000 North American Biennial Conference of the American Desalting Association. South Lake Tahoe, Nevada.
5. Seacord, T.F., S. Dundorf, and J. MacHarg. Affordable Desalination Collaboration 10 mgd Conceptual Case Study. Proc. 2007 AMTA Conference. Las Vegas, Nevada.
6. *Water Sources Powering Southern California*, by Robert C. Wilkinson Ph.D., January 2004.
7. *Water and Desalination Report*, vol 41, #42, These prices represent the volumetric price of water, including taxes, for domestic consumers using less than 15 m^3 per month.

Affordable Desalination Collaboration
10-MGD Case Study

Tom Seacord, P.E.
Steve Dundorf
John MacHarg

carollo
Engineers...Working Wonders With Water™

Goals of ADC

1. Demonstrate affordable desalination using off-the-shelf technology
   a. 5.6-7.6 kWh/kgal (1.5-2.0 kWh/m^3, 1850-2467 kWh/acre-ft)
2. Create a body of data that can guide & benefit future SWRO designs
3. Promote seawater desalination as an affordable, viable source of fresh water

SWRO Industry Leaders Are Combining Resources to Prove Seawater Desalination is Affordable

U.S. DEPARTMENT OF THE INTERIOR
BUREAU OF RECLAMATION

ERI
ENERGY RECOVERY INC.
Making Desalination Affordable

West Basin
municipal water district

carollo engineers

STATE OF CALIFORNIA
ENERGY COMMISSION

DEPARTMENT OF WATER RESOURCES
STATE OF CALIFORNIA

NAVFAC
Naval Facilities Engineering Command
ENGINEERING SERVICE CENTER

FILMTEC™
MEMBRANES

POSEIDON RESOURCES

Piedmont

CodeLine
Pentair Water

GUINARD
UNION PUMPS

MARIN MUNICIPAL WATER DISTRICT

CITY OF SANTA CRUZ

ROLLED ALLOYS
The world's heat, corrosion, titanium, and aerospace alloy specialists.

U.S. DESALINATION COALITION

MUNICIPAL WATER DISTRICT OF ORANGE COUNTY

San Diego County Water Authority

WaterEye

Background
Desalination Energy Requirements

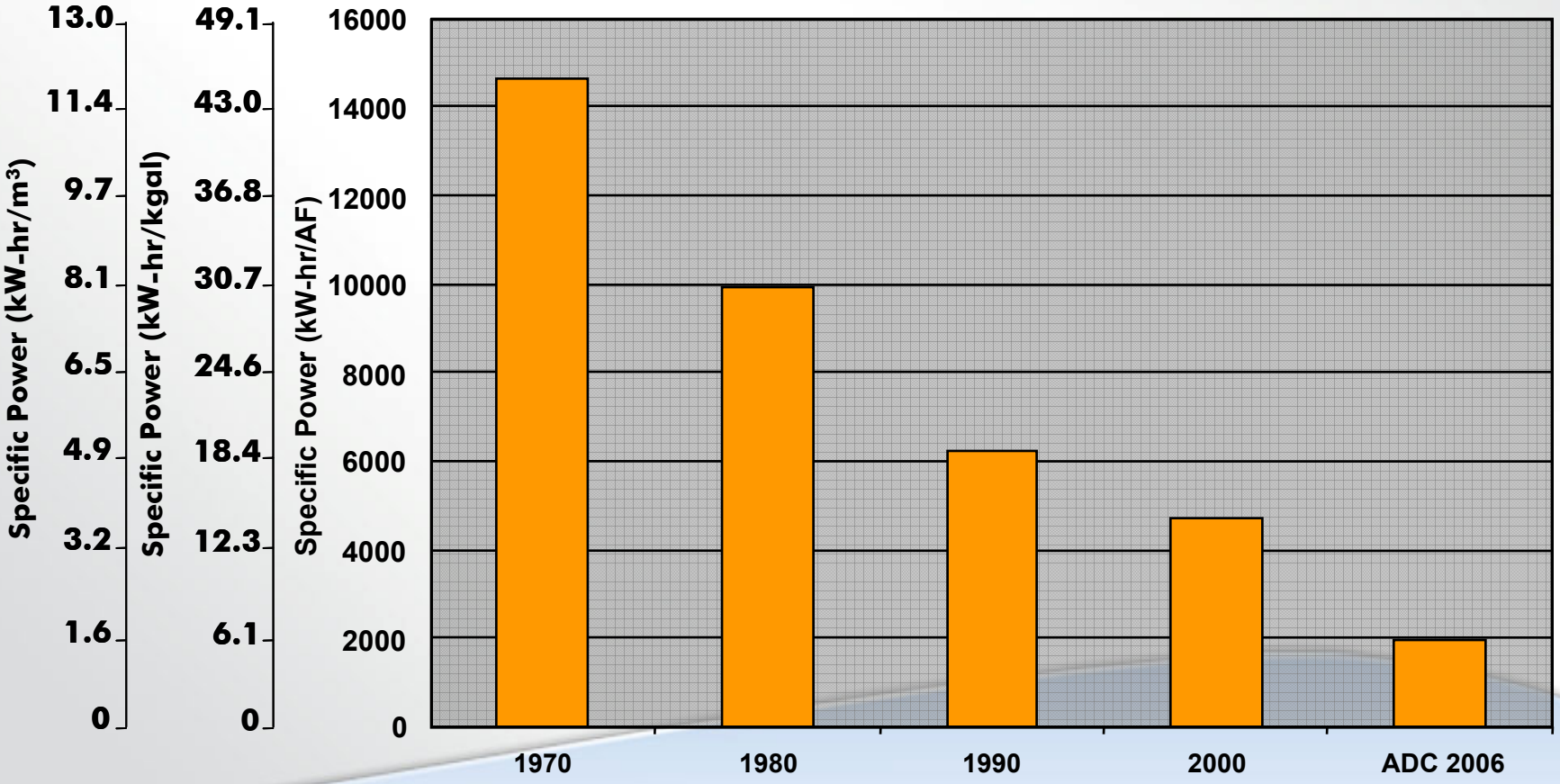

Background

California Water Supply Energy Requirements

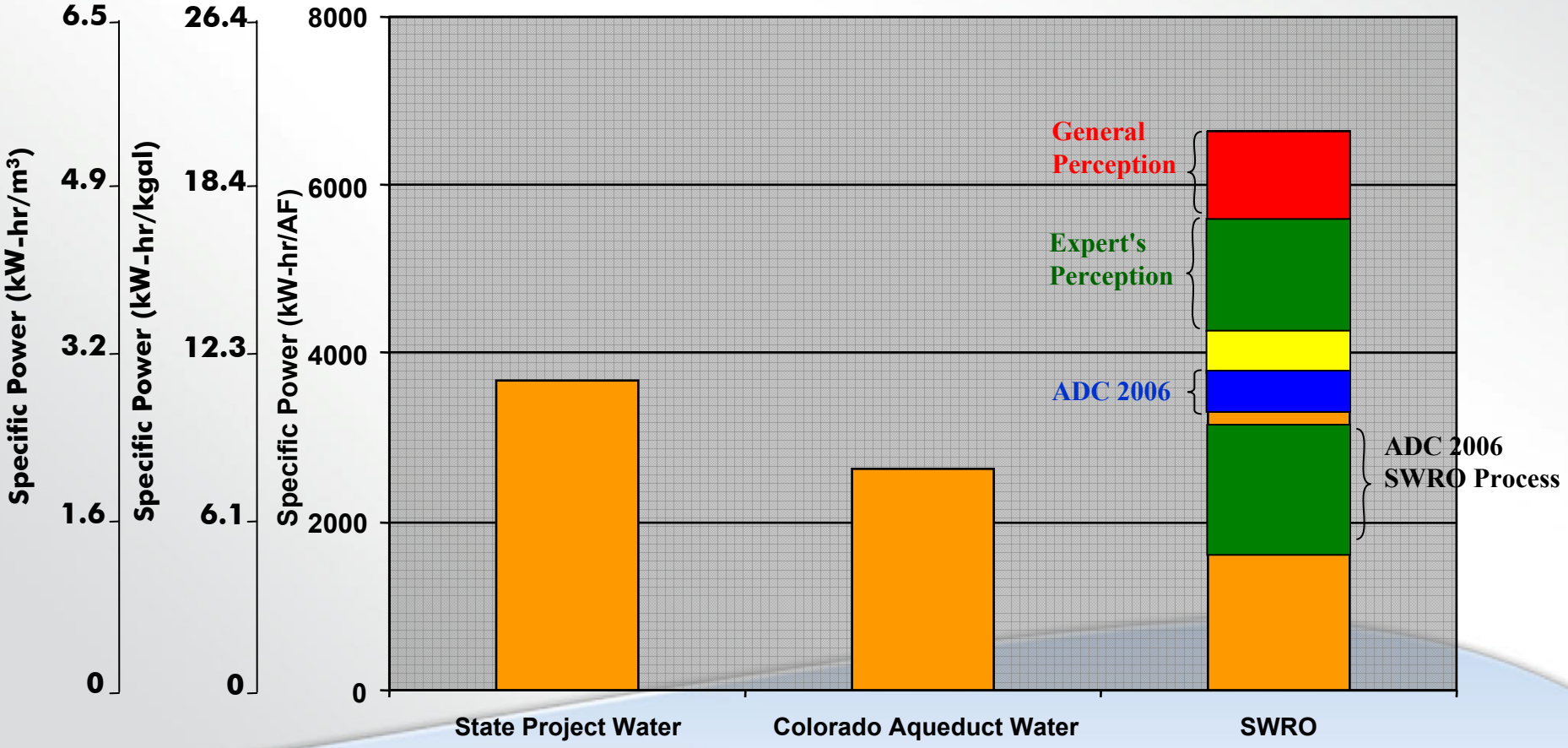

Background

California Water Supply & Treatment Costs

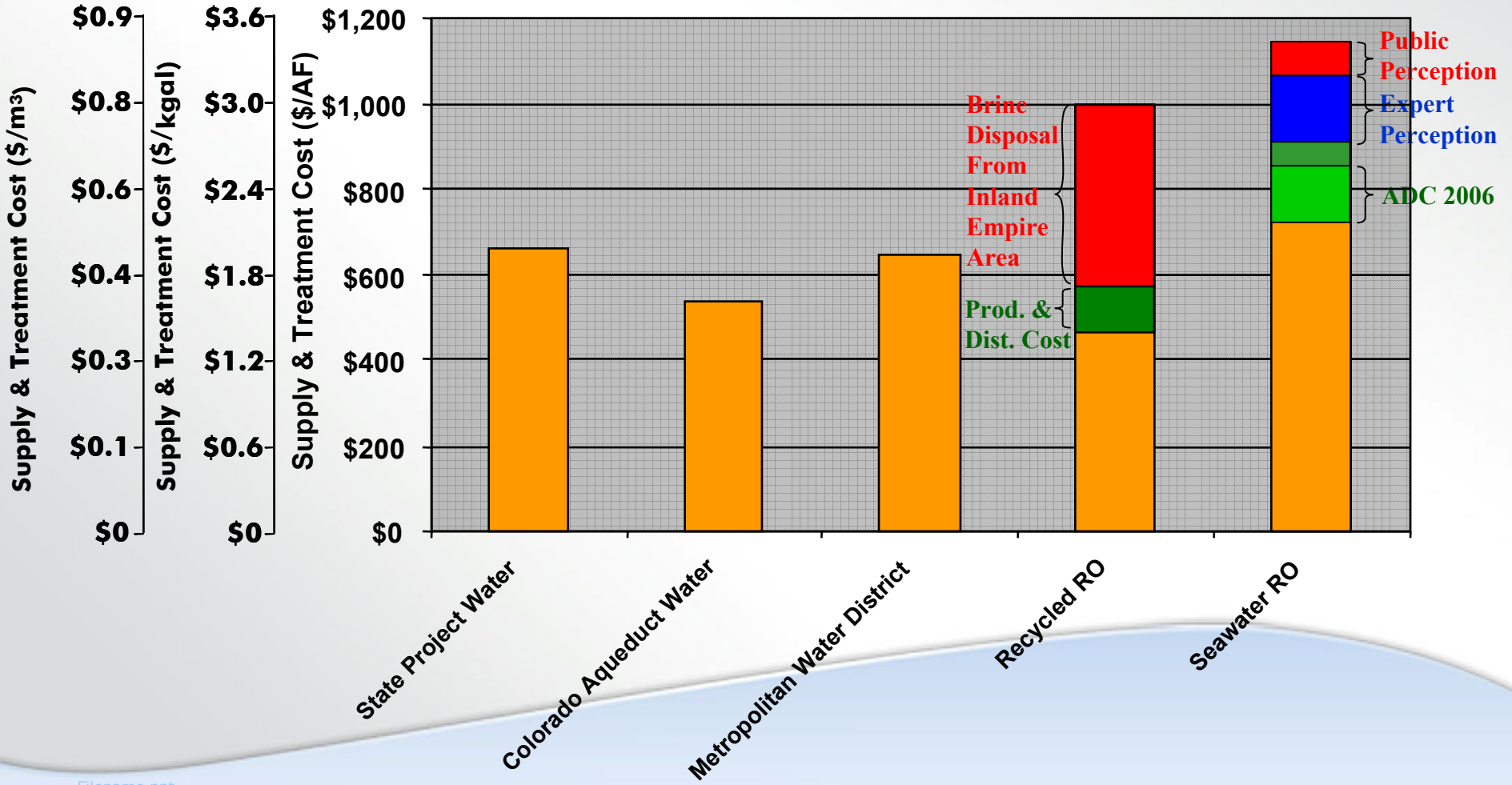

US Navy Test Facility
Port Heuneme, California

ADC's SWRO Demonstration Plant

ADC SWRO Plant Schematic

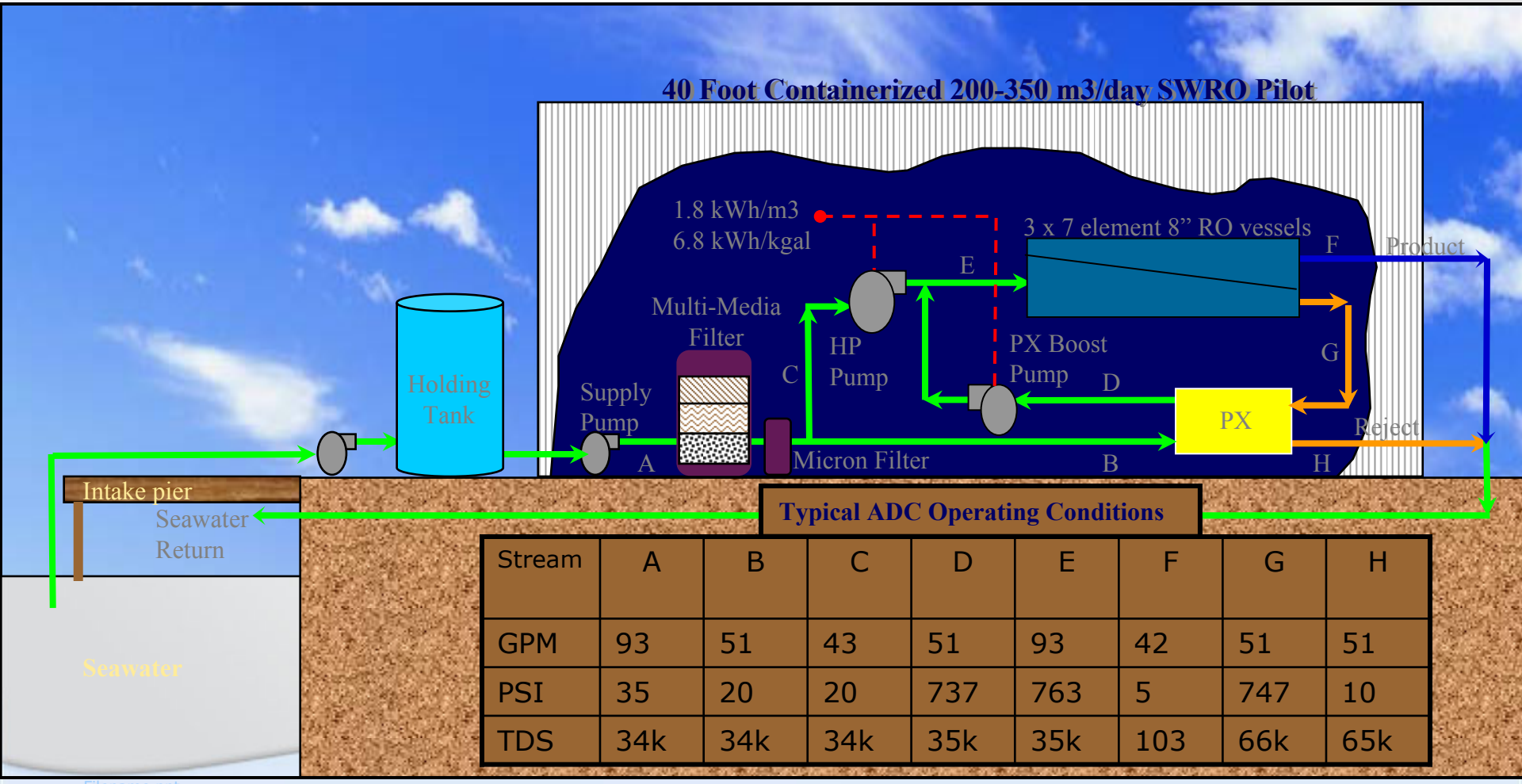

Typical ADC Operating Conditions

Stream	A	B	C	D	E	F	G	H
GPM	93	51	43	51	93	42	51	51
PSI	35	20	20	737	763	5	747	10
TDS	34k	34k	34k	35k	35k	103	66k	65k

ROSA6.0 Projections SW30XLE-400, 7.2 gfd, 45% recovery, 60°F, 34,432 TDS feed, 0.85 Fouling

Testing Protocol

Testing Protocol

1. Goal
   a. Establish testing materials & procedures
   b. Ensure desired results do not influence conclusions
2. Contents
   a. Design of the SWRO process
   b. Type of data, collection procedures, monitoring frequency, and analytical methods
   c. Cost estimating methods
   d. Quality control procedures

Test Parameters & Data Collection

1. Variables
   a. Flux rates: 6, 7.5, 9 gfd
   b. Recovery: 35, 42.5, 50%
   c. Membrane Rejection: 99.5%-99.8%
2. Data analysis
   a. Power consumption
   b. Feed pressure and membrane DP
   c. ASTM normalized data
   d. Feed quality
   e. Permeate quality and Boron
   f. NPV of capital costs vs. O&M (energy costs)

Cost Estimating Procedures

1. Procedure Established in Protocol
   a. Cost model & unit costs available at: www.affordabledesal.com
2. Net Present Value Analysis
   a. Amortized capital costs
      - Project Life 30 years, 5% interest
      - Co-location with power plant
   b. Annual O&M
      - Power $0.08/kW-hr
      - Replacement of Membranes (CARR)
        - To maintain performance (energy & permeate quality)

Quality Control

1. Data Collection
   a. Manual and Instrumentation
   b. Water quality testing procedures
2. Peer Review
   a. Independent, 3rd party professionals

10-MGD Conceptual Study

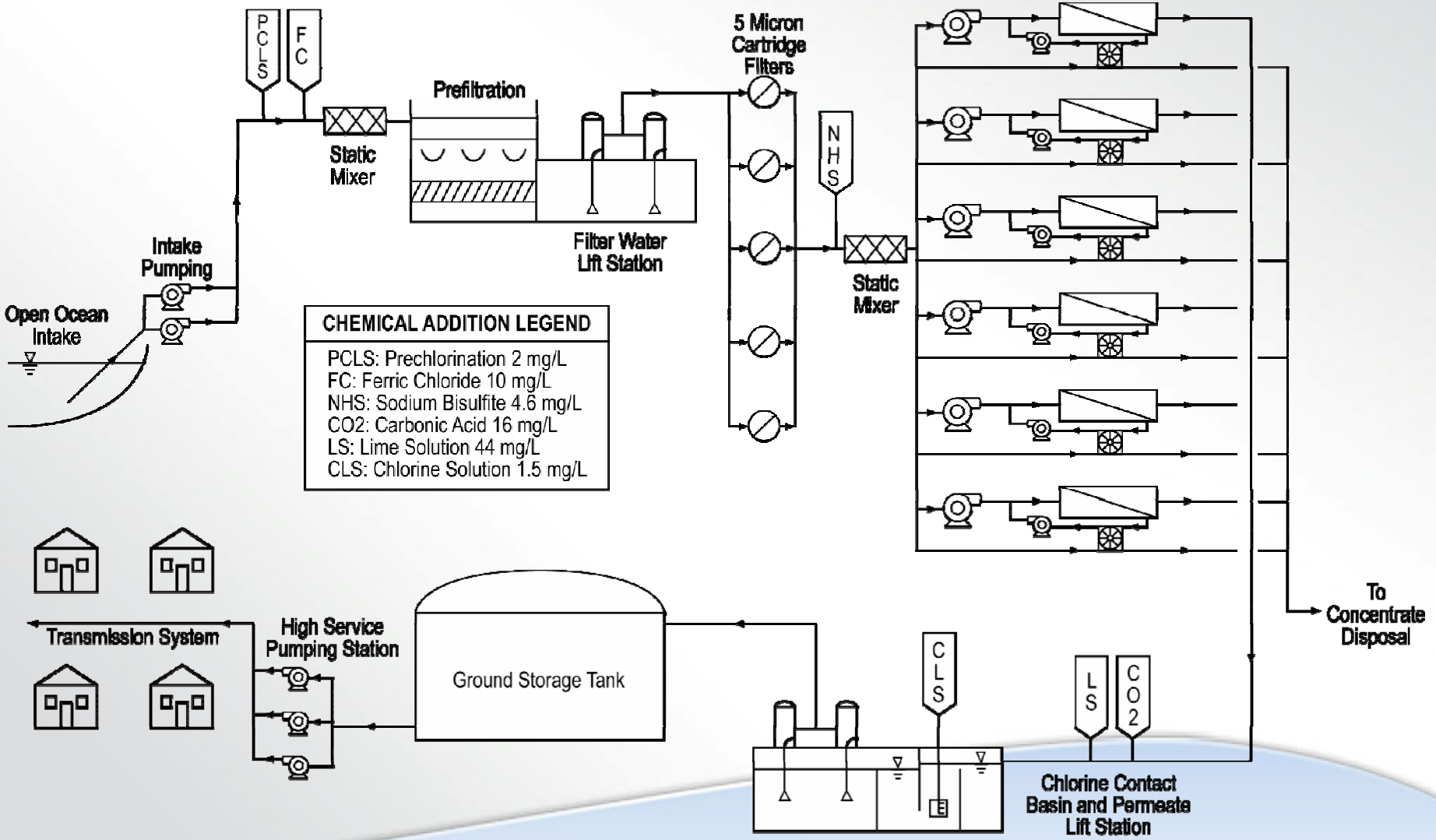

Test Results

Pretreatment

1. Initial Filtration Problems
   a. Red tide
2. SDI < 5
   a. Not exceeded 86%
3. Turbidity < 0.1
   a. Not exceeded 88%

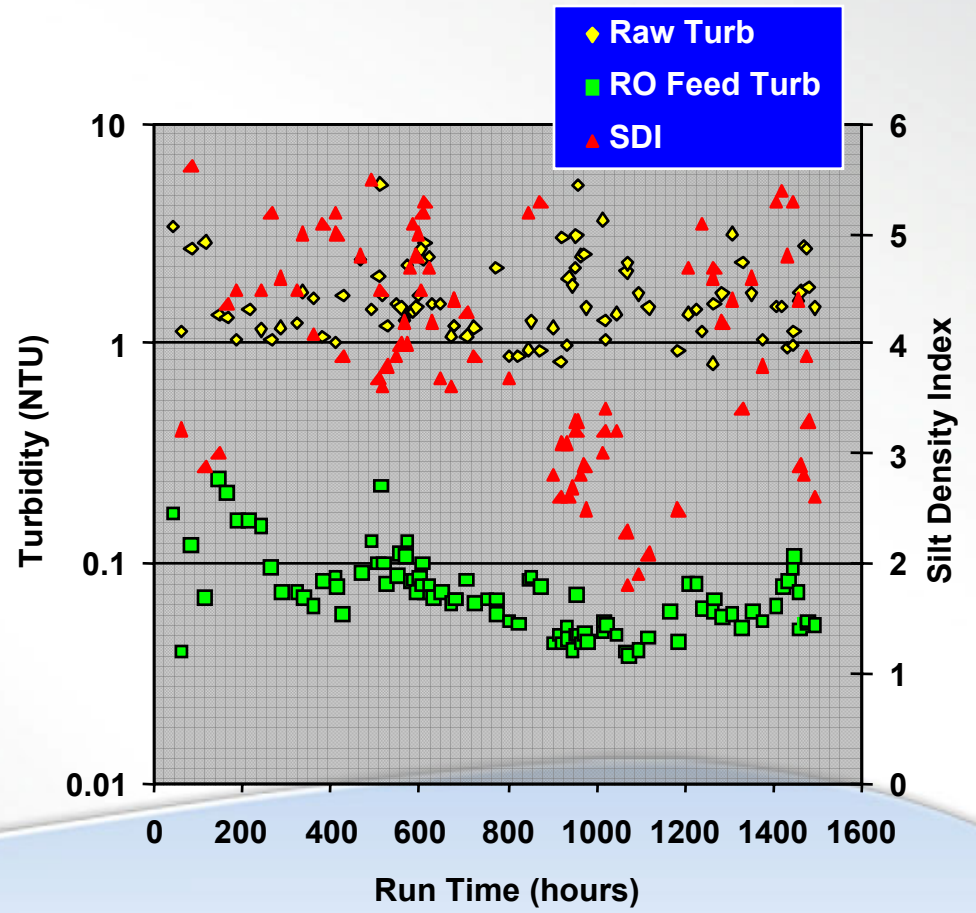

PX & SWRO Feed Water TDS

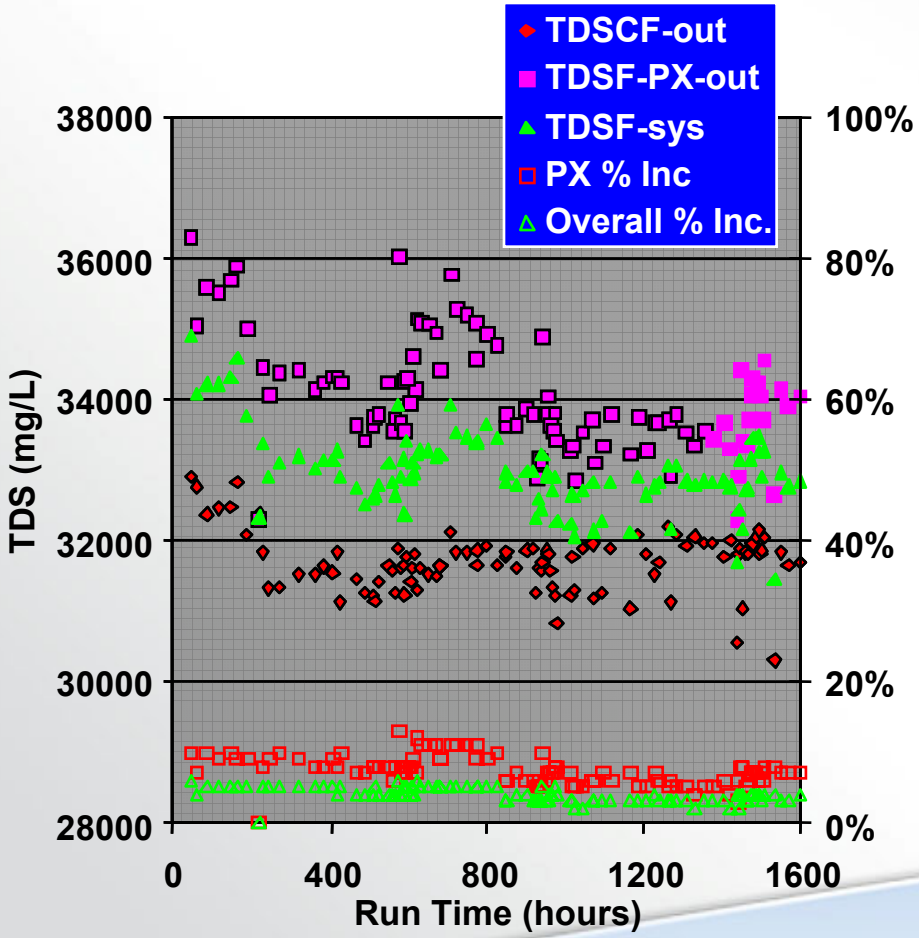

1. PX Device Efficiency
   a. 96%
2. PX Adds TDS
   a. Direct brine/feed contact
   b. 5 - 10% ↑ to PX HP out TDS
   c. 4 to 6% overall ↑ to SWRO feed TDS
      - 30 psig ↑ to SWRO feed pressure

Specific Power Consumption

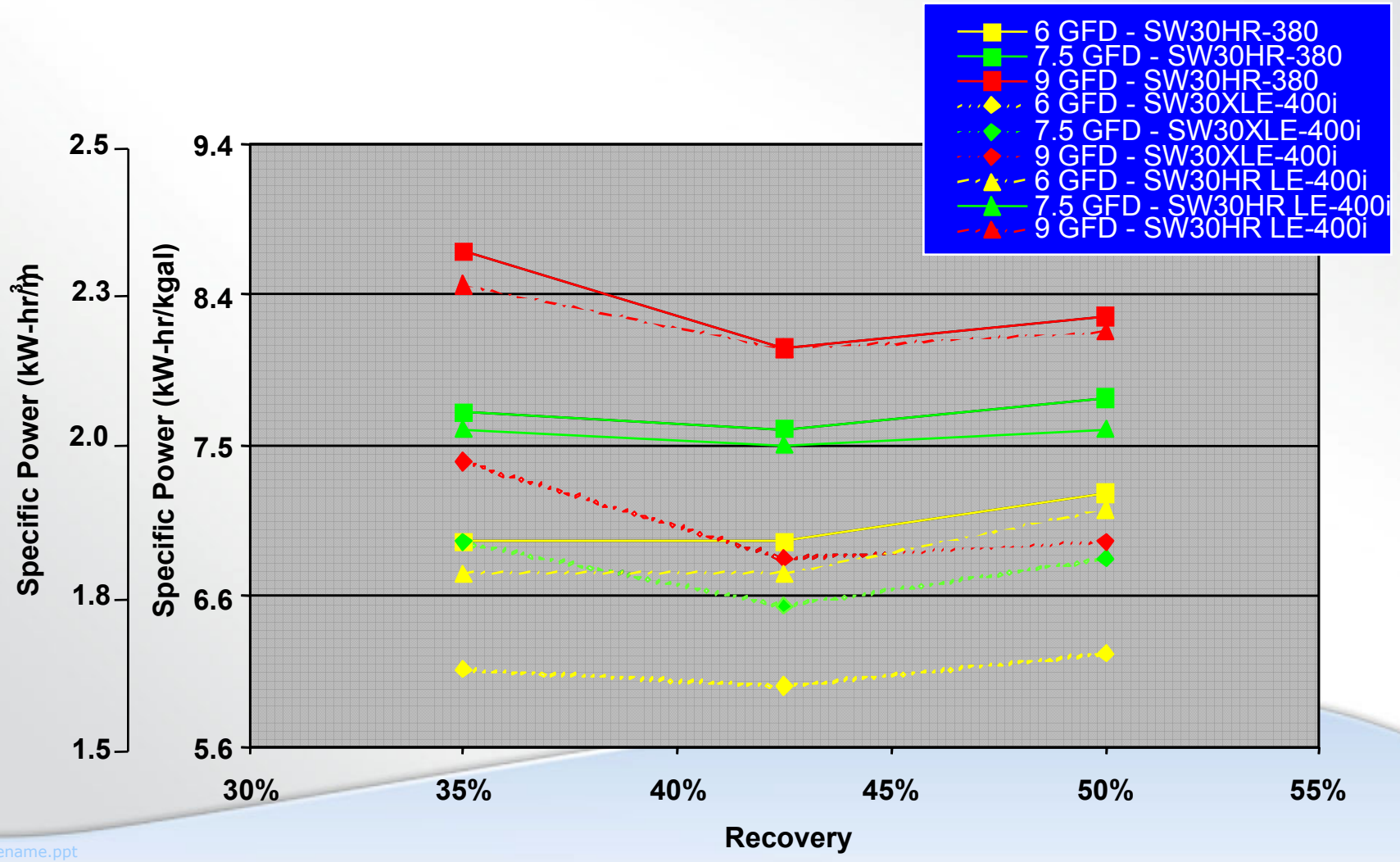

Impact of Feed Pump - Scalability

1. PD Pump Selected for ADC
   a. High efficiency
   b. Pulsating flow
2. Centrifugal Pumps Used for Larger Trains
   a. Low efficiency for small pumps
   b. Smooth flow
3. Pressure Center Design
   a. May reduce power @ low flow rates
4. 50 MGD Case Study
   a. 5.9 to 8.9 kWh/kgal
5. 10 MGD Case Study
   a. 6.6 to 9.8 kWh/kgal

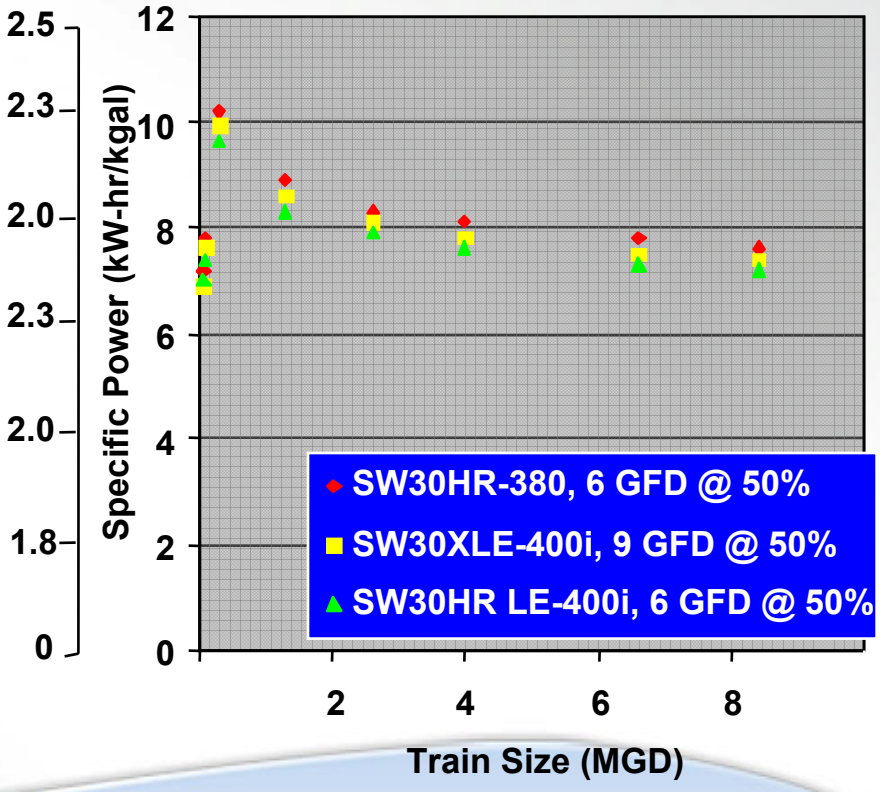

Permeate Quality - Boron

1. Flux ↑ = Boron ↓
2. Recovery ↑ = Boron ↑
3. Low energy membrane produced marginally acceptable boron
   a. SW30HR-380
      - 0.45 to 0.85 mg/L
   b. SW30XLE-400i
      - 1.05 to 1.44 mg/L
   c. SW30HR LE-400i
      - 0.45 to 0.85 mg/L

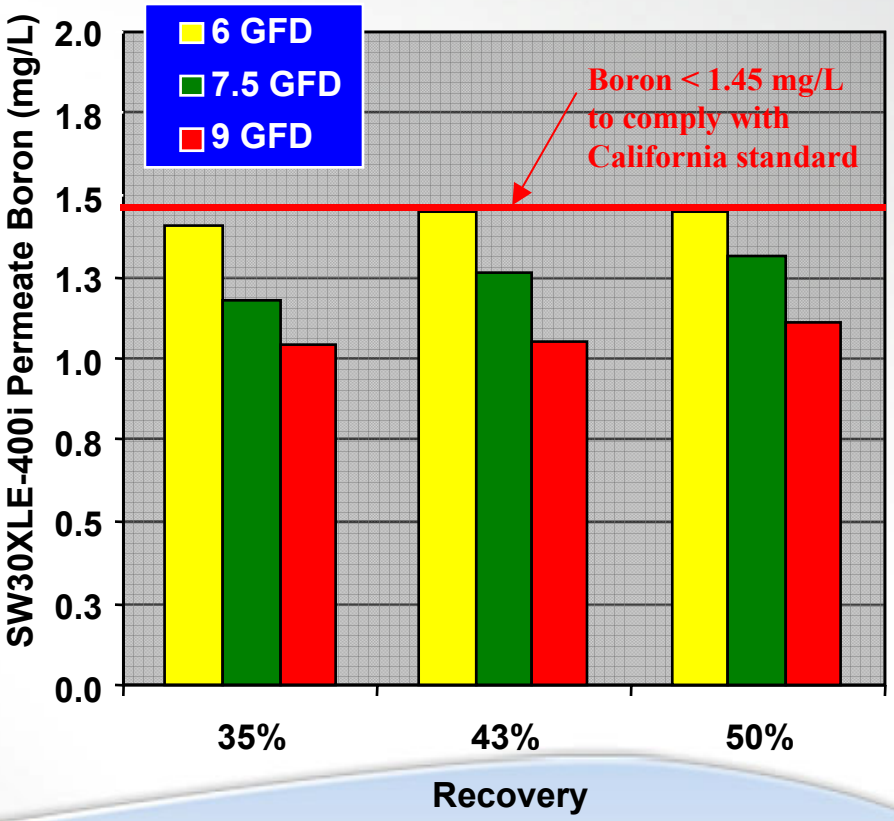

Permeate Quality - Boron

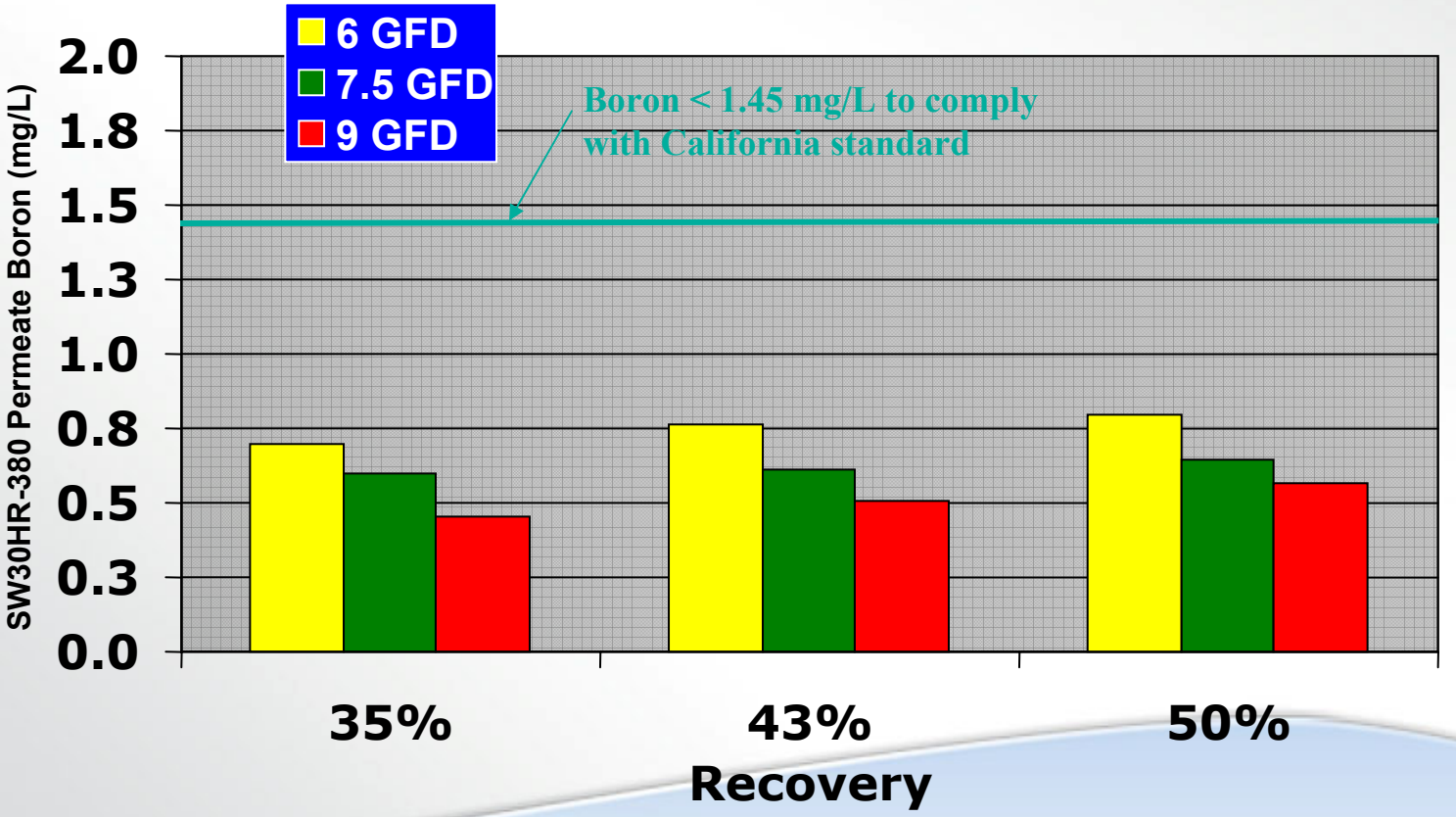

Permeate Quality - TDS

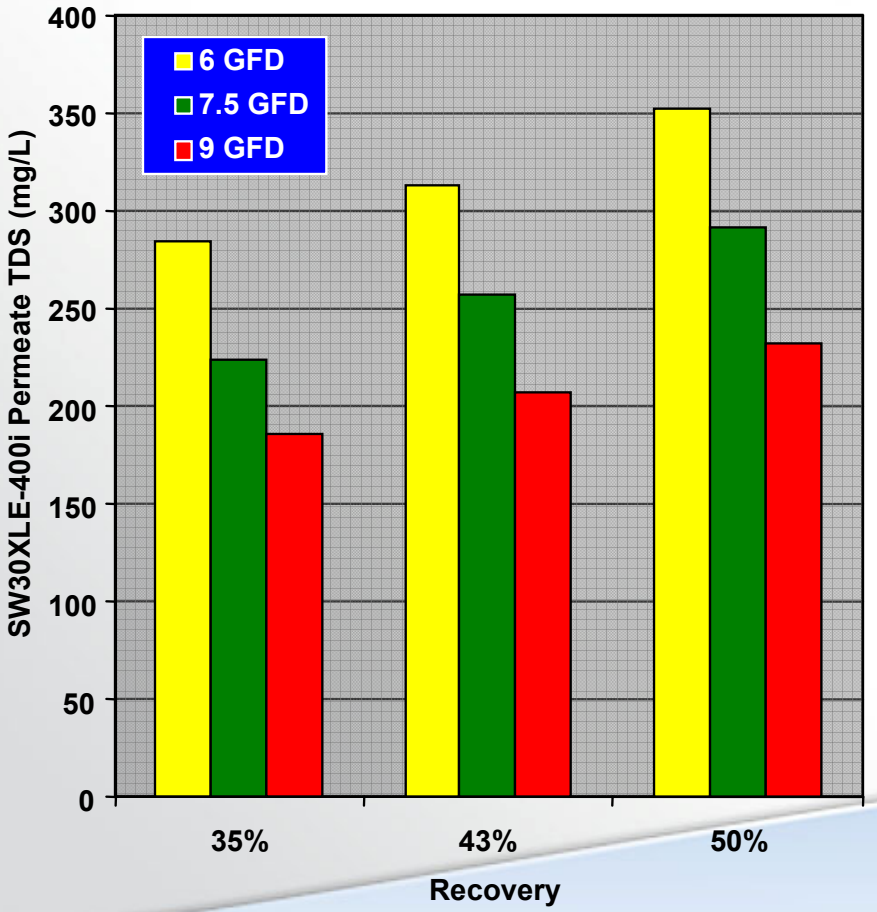

1. Flux ↑ = TDS ↓
2. Recovery ↑ = TDS ↑
3. Low energy membrane produced highest TDS
   a. SW30HR-380
      - 80 to 175 mg/L
   b. SW30XLE-400i
      - 190 to 350 mg/L
   c. SW30HR LE-400i
      - 95 to 295 mg/L

Permeate Quality - TDS

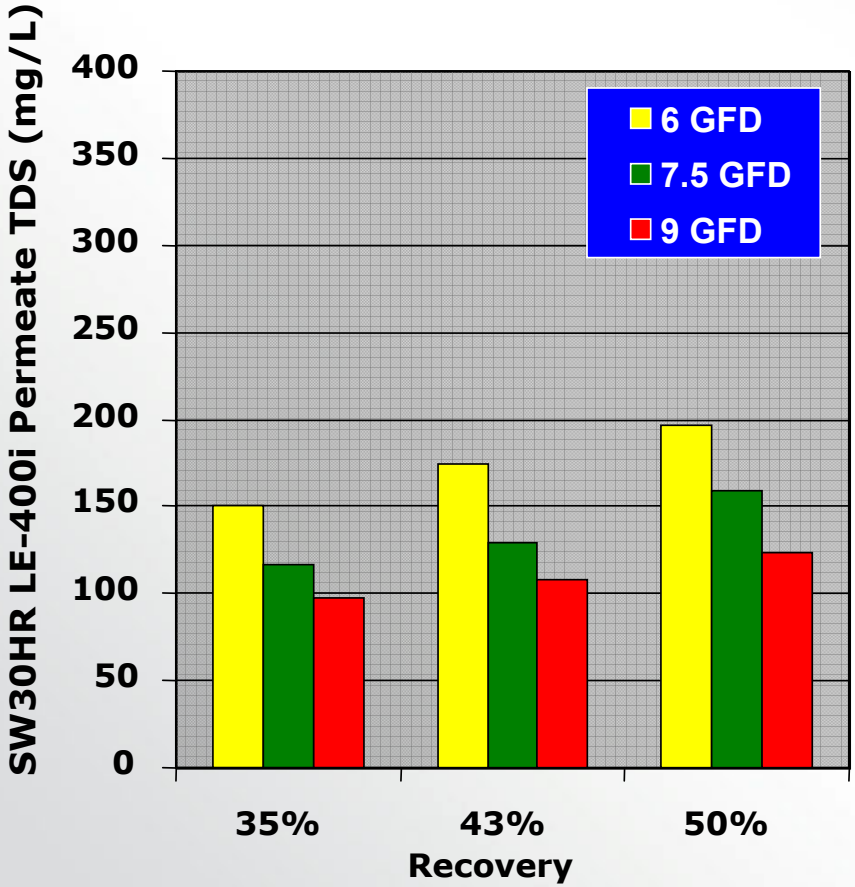

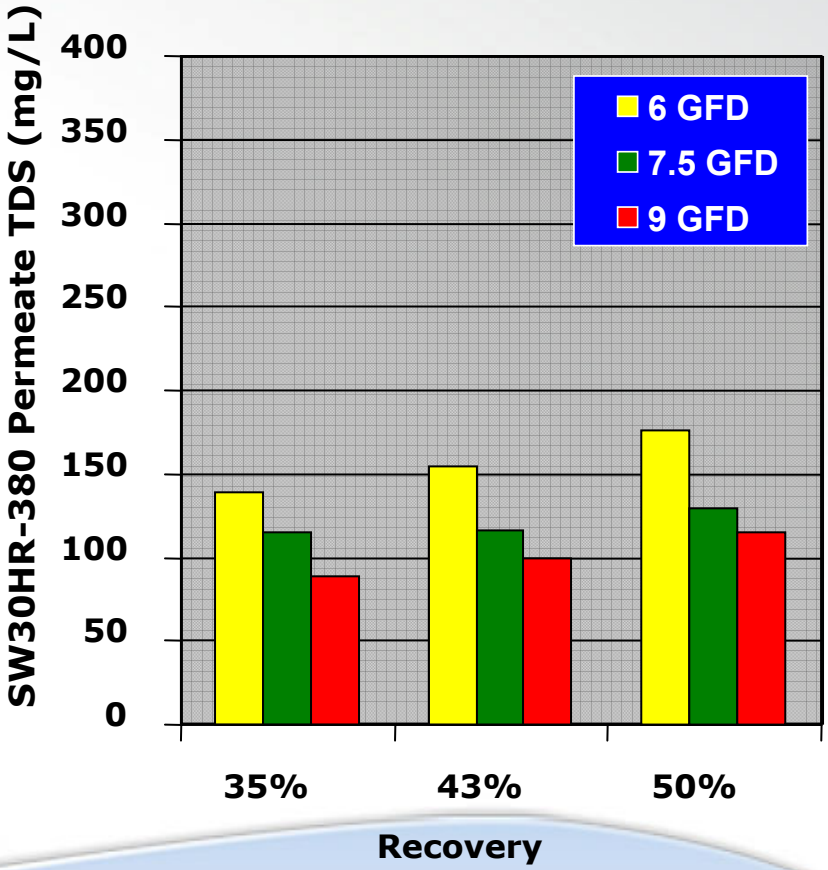

Treatment Costs

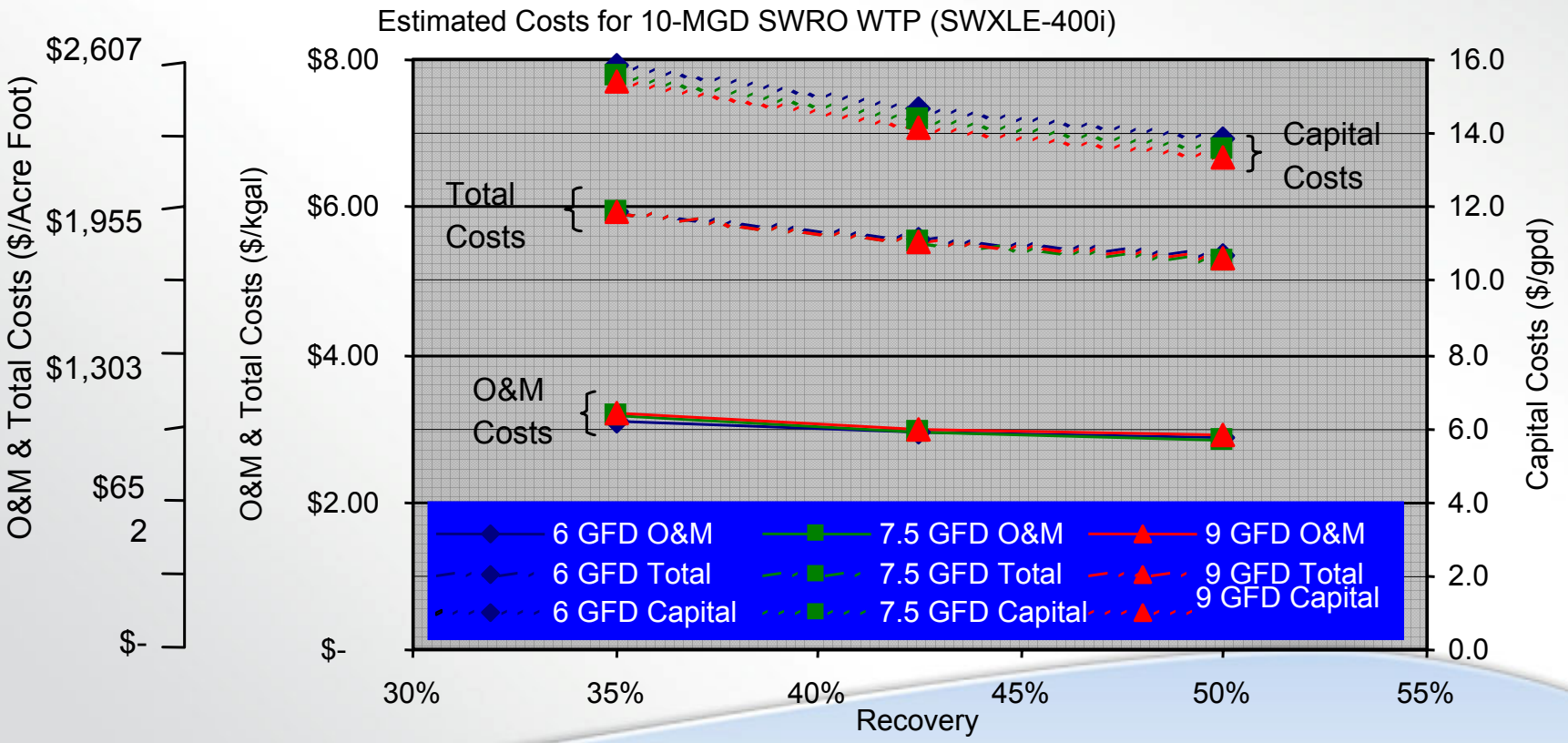

Treatment Costs

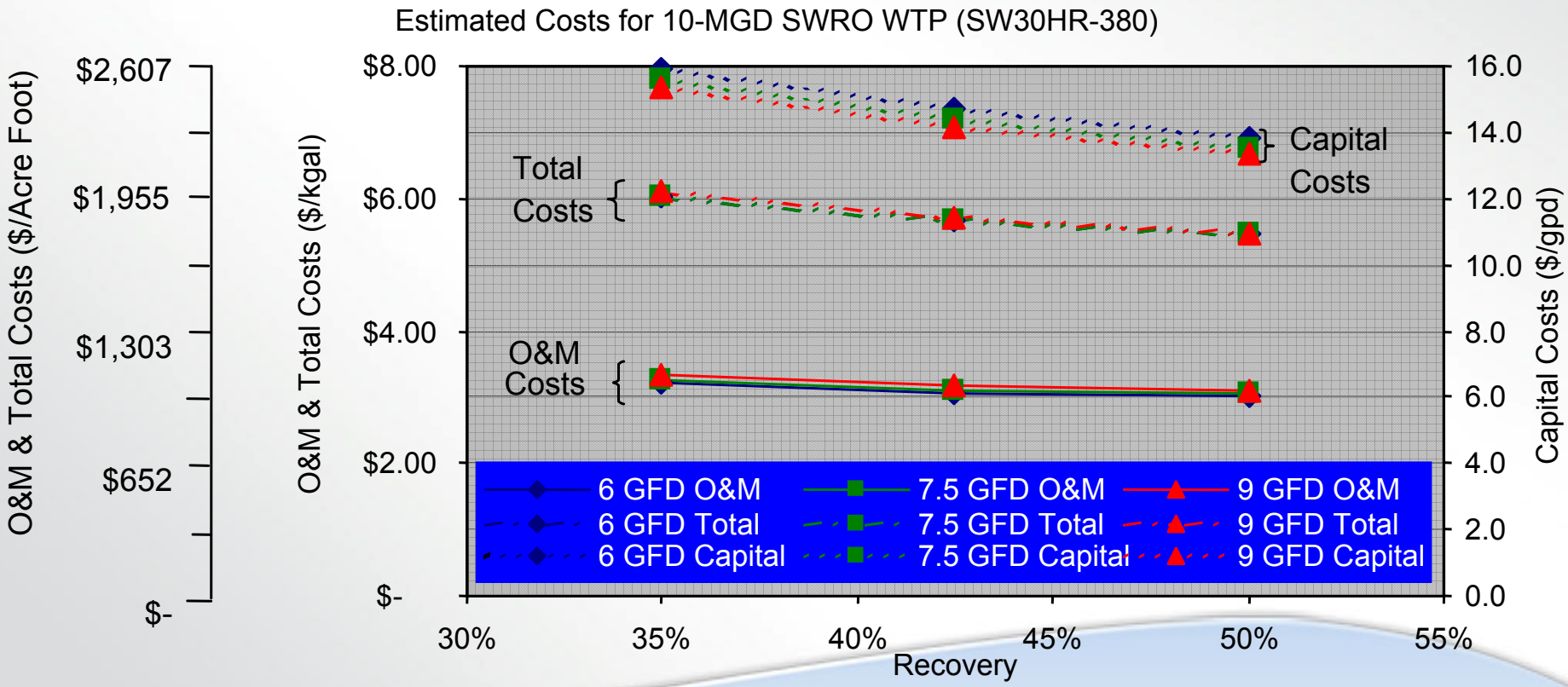

Summary

Conclusions

1. Flux & recovery impact permeate quality
2. Low energy SWRO membrane has lowest cost, but poorest permeate quality
3. Due to size and type of pump, 10 MGD plant less efficient
   a. 10 MGD – 6.6 to 9.8 kWh/kgal
   b. 50 MGD – 5.9 to 8.9 kWh/kgal
4. ADC's design ↓ power by
   a. 10 MGD – approx. 30% over industry perception
   b. 50 MGD – approx. 40% over industry perception
   c. Low = 5.98 kW-hr/kgal

Conclusions (cont.)

1. Recovery of 50% resulted in lowest NPV
2. SWRO is competitive with other supply options in California
   a. 10 MGD
      - $1,725 to $1,970/AF
   b. 50 MGD
      - $772 to $913/AF

Recommendations

1. Data must be taken in context of raw water quality (i.e., temperature)
2. Designers must consider public values when establishing design water quality (i.e., boron)
3. Future Study
   a. Pretreatment
   b. Higher Recovery
   c. Long Term Testing
   d. Test Alternate Materials/Configurations
   e. Economy of Scale – Large Diameter Elements

Acknowledgements

1. US Navy Staff
   a. Tedd Kuepper, William Varnava, Bob Sandoval
2. ADC Members
   a. www.affordabledesal.com
3. Peer Reviewers
   a. Bob Castle/Paul Seller – Marin Municipal Water District
   b. Paul Shoenberger/Gerry Filteau – West Basin
   c. Nikolay Voutchkov – Poseidon Resources

Affordable Desalination Collaboration
10-MGD Case Study

Tom Seacord, P.E.
Steve Dundorf
John MacHarg

carollo
Engineers...Working Wonders With Water™

12.0 Test Protocol

AFFORDABLE DESALINATION COLLABORATION

SEAWATER RO DEMONSTRATION STUDY

PART II

DRAFT - VALIDATION PROTOCOL

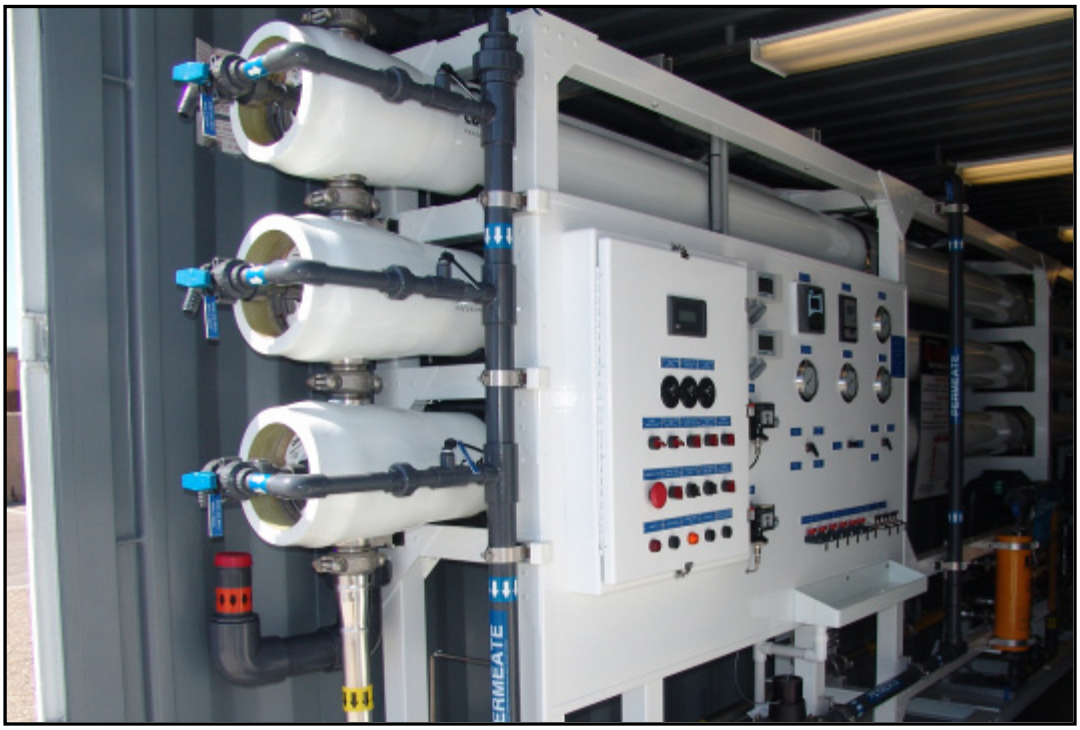

ADC Demonstration Facility at U.S. Navy Seawater Desalination Test site in Port Hueneme, CA

2419 E. Harbor Blvd. #173, Ventura, CA 93001

e-mail: info@affordabledesalination.com - www.affordabledesal.com

Affordable Desalination Collaboration

SEAWATER RO DEMONSTRATION STUDY

VALIDATION PROTOCOL

TABLE OF CONTENTS

Page

1.0 INTRODUCTION 1
1.1 Background 1
1.2 Phase II Demonstration Study Objectives 2
2.0 VALIDATION PROTOCOL 3
2.1 Demonstration Scale SWRO Equipment 3
2.1.1 SWRO Demonstration Scale Testing 8
2.2 Testing Operation and Monitoring 21
2.3 Membrane Cleaning & Storage 27
2.3.1 SWRO Membranes 27
2.3.2 UF Membranes 28
2.4 Determining Affordability 28

APPENDIX A: Data Sheets
APPENDIX B: Process and Instrumentation Diagrams
APPENDIX C: Port Hueneme Water Quality Data
APPENDIX D: UF Cleaning
APPENDIX E: UF Equipment Drawings and Catalog Sheet

LIST OF TABLES

Table 1.2 Demonstration Scale Test Potable Water Quality Goals....3
Table 2.1 SWRO Demonstration Scale Test Equipment Criteria....4
Table 2.2 Schedule of Tests - Alternate Membranes and Hybrid Membrane Testing....10
Table 2.3 Schedule of Testing Conditions – Low Pressure SWRO....11
Table 2.4 The Unbalanced Pressure Exchanger 44/54% Recovery Actual Datal....13
Table 2.5 Schedule of Testing Conditions – Unbalanced PX....15
Table 2.6 Interstage Booster-Pressure Exchanger Hybrid Power Model....17
Table 2.7 Summary of Off-line Intermittent UF Unit Operations....18
Table 2.8 UF Membrane Evaluation Criteria....18
Table 2.9 UF Membrane System Data Collection Requirements....19
Table 2.10 UF Pretreatment (In line coagulation) Evaluation....20
Table 2.11 Hydraulic Monitoring - SWRO System....22
Table 2.12 Water Quality Monitoring (Weeks 1-3 & 7-9) - SWRO System....23
Table 2.13 Water Quality Monitoring (Weeks 3-6)....24
Table 2.14 UF System Water Quality Monitoring Schedule....25
Table 2.15 Water Quality Testing Methods....26
Table 2.16 Present Value Analysis Criteria....29
Table 2.17 Membrane Life & Annual Replacement Rate....30

LIST OF FIGURES

Figure 1.1 ADC Demonstrates SWRO Is Competitive with Other Water Supply Options in Southern California....2
Figure 2.1 Process Flow Diagram (ADC demonstration unit with media filtration pretreatment)....6
Figure 2.2 Process Flow Diagram (ADC demonstration unit with UF Membrane pretreatment)....7
Figure 2.3 The Unbalanced Pressure Exchanger Diagram....12

1.0 INTRODUCTION

1.1 Background

The Affordable Desalination Collaboration (ADC) is a California non - profit organization comprised of state and federal government agencies, water districts, and industry leaders working together to demonstrate seawater desalination as a reliable, affordable, and environmentally sound source of potable water. The objective of ADC Phase I was to design, build and test a scalable seawater reverse osmosis (SWRO) plant using commercially available technology that can demonstrate efficient energy consumption. The ADC's demonstration scale SWRO plant (rated capacity of 48,000 gpd to 75,600 gpd) was tested at the U.S. Navy's Desalination Research Center, located in Port Hueneme, California, and operated from May 2005 through March 2006. Key achievements of Phase I testing included:

- Demonstrating that SWRO is a viable water supply alternative for Southern California, as shown in Figure 1.1.
- Setting a world record, low SWRO process energy consumption of 6.0 kWh/kgal of permeate produced.

In Figure 1.1, the treatment costs associated with SWRO are shown in yellow, which are comparable to other traditional sources. For example, in Southern California the State Water Project, which transports water from Northern California to Southern California, consumes on average 10.4 kWh/kgal (2.75 kWh/m^3). Moreover, in San Diego, California end users can pay more than $6.00/kgal ($1.58/m^3). The total costs for a recycled water project including distribution (green bar) and concentrate disposal (red bar) can amount to $3/kgal. Costs associated with SWRO were historically believed to be high, as represented by the public (red bar) and expert (green bar) perceptions in the figure. Many experts in the industry still believe that the seawater desalination process requires between 10 to 14 kWh/kgal (2.6 to 3.7 kWh/m^3), which is, in part, why large-scale seawater desalination has not become a reality. However, based upon the work conducted in ADC Phase I, using commercially available technologies applied in a manner where design emphasis is placed on energy efficiency and responsibly reducing the overall total water costs, a new paradigm for the costs of seawater desalination is now available. Seawater desalination can now be considered cost competitive with other new water supply options in Southern California. Publicized ADC Phase I results have been able achieve an important objective of educating the public that seawater desalination is an affordable, viable and reliable source of potable water for the future. The ADC website: www.affordabledesal.com details the goals, previous publications and information related to the ADC.

From the ADC Phase I study, it was recommended that additional studies should be conducted to include further research into feed water pretreatment options for the SWRO process, expand the membrane testing to include other manufacturers, and configure the SWRO treatment process for higher recovery and improved energy efficiency.

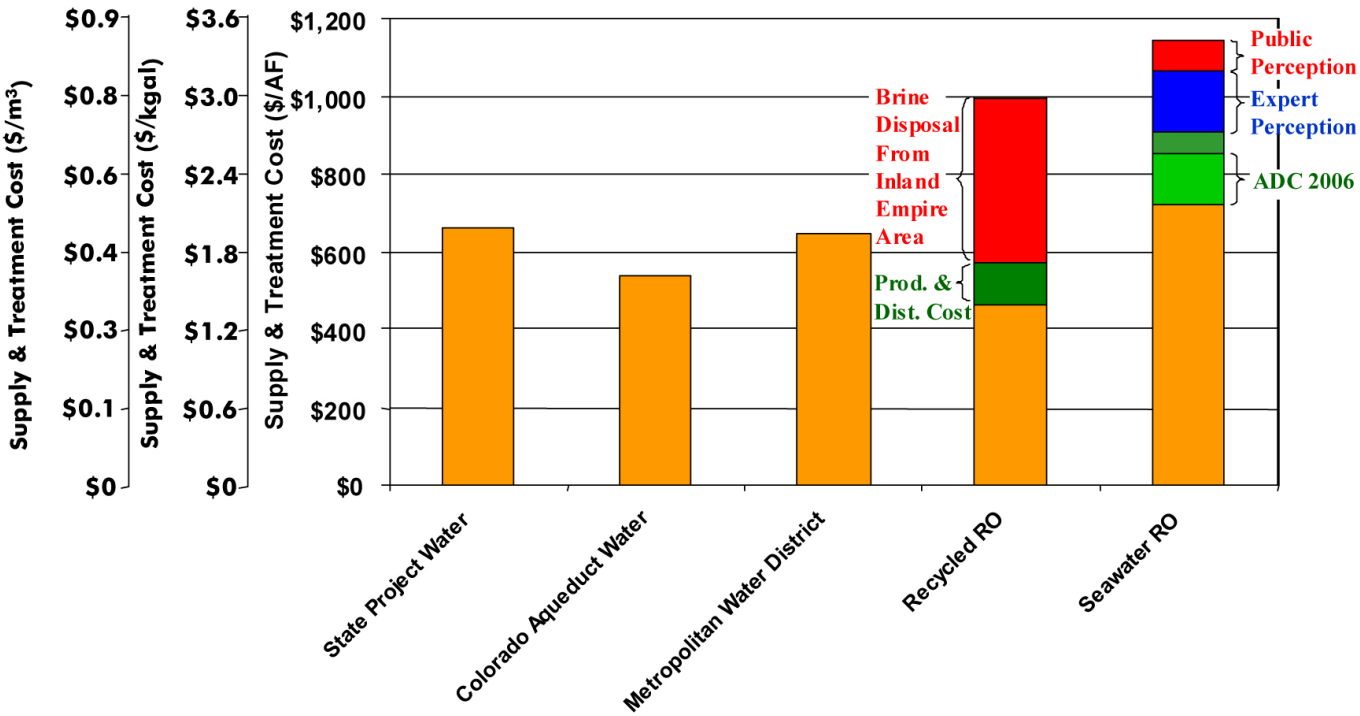

Figure 1.1 ADC Demonstrates SWRO Is Competitive with Other Water Supply Options in Southern California

1.2 Phase II Demonstration Study Objectives

The objective of this project is to test a state-of-the-art, energy efficient, demonstration scale SWRO process, designed and built using scalable, commercially available, and/or new technologies, in a manner that would provide preliminary information necessary for estimating both capital and operating costs for a 50-MGD seawater desalination plant to supply potable water.

The specific objectives of ADC Phase II are to test the following SWRO process alternatives:

- Test and demonstrate additional membranes by different manufactures with a similar protocol to ADC Phase I in order to:
- Validate original results from ADC Phase I
- Demonstrate results can be achieved with several manufacture's membranes
- Provide a performance comparison with similar feed water conditions.

- Test and demonstrate Dow Filmtec's "hybrid membrane" design, by staging membranes of various performances in a single seven-element vessel.
- Demonstrate new process design configurations to achieve higher system recoveries (i.e., over 50%)
- Test and demonstrate the performance of GE/Zenon ZeeWeed® 1000 ultrafiltration (UF) membrane technology as a reliable method of pretreatment for SWRO systems for feed water conditions at the Port Hueneme Test Facility.

The overall goal of this project is to:

- Improve seawater desalination treatment technologies in terms of cost, energy use, and environmental considerations
- Use the estimated costs generated as a result of this work to further refine the paradigm for engineers, planners, OEMs, membrane manufacturers, and policy makers related to the costs of seawater desalination.

While evaluating these SWRO process alternatives, it is important that potable water quality goals are met. Potable water quality goals for the ADC Phase II study are summarized in Table 1.2.

Table 1.2 Demonstration Scale Test Potable Water Quality Goals

Parameter	Unit	Value	Basis
TDS	mg/L	< 500	Federal Secondary Standard
Boron	mg/L	< 1.45	Potential Future Standard
Chloride	mg/L	< 250	Federal Secondary Standard

2.0 VALIDATION PROTOCOL

This section describes the materials and methods used to validate that the following process design concepts and their potential to reduce either or both capital costs or energy consumption while meeting potable water quality goals.

- Alternate membrane types (compared to ADC Phase I)
- Hybrid membrane configuration
- High recovery SWRO
- UF pretreatment

2.1 Demonstration Scale SWRO Equipment

Criteria used to size the demonstration scale SWRO and UF Pretreatment equipment are presented in Table 2.1. Process flow diagrams are presented in Figures 2.1 and 2.2.

Table 2.1 SWRO Demonstration Scale Test Equipment Criteria

Parameter	Unit	Value
Feed, Flush, Cleaning Pump		
Manufacture/Model		AMPCO, ZC2 2.5x2
Duty Range	gpm @ ft H_2O	170gpm @ 80 ft TDH
UF Pretreatment		
Membrane system manufacturer		GE/Zenon
Membrane system		Z-Box S18
Membrane module		ZeeWeed 1000 V3
Membrane type		Immersed hollow fiber
Nominal Pore Size	microns	0.02
Number of Membrane Tanks		3
Minimum Net Permeate Production	gpd	96,000
Maximum Net Permeate Production	gpd	216,000
Design Flux (at max capacity)	gfd	20
Recovery		95%
Media Filter		
Manufacturer		ALAMO
Quantity	Number	2
Diameter	Inch	48
Height	Inch	72
Loading Rate	gpm/ft^2	3 to 6
Cartridge Filter		
Manufacturer/Model		Eden Excel, 88EFCT4-4C150
Quantity	Number	22
String Wound Cartridge Specs		#XL1-EP050-PLC40, 5 micron
Pressure Vessels		
Manufacturer/Model		Codeline, 80A100-7
Quantity	Number	3
No. of Membrane Elements per Vessel	Number	7

Table 2.1 SWRO Demonstration Scale Test Equipment Criteria

Parameter	Unit	Value
Membrane Element		
Manufacturers/ Models		Toray TM800C Hydranautics SWC5 Koch TFC 2822HF-400 Dow FilmTec Hybrid Config. [1]
Quantity	Number	21
Diameter	inch	8
Surface Area	ft^2	400 (370 [2])
Total Membrane Area (A_{SYS})	ft^2	8400 (7700 [2])
High Pressure Pump		
High Pressure Feed Pump Type		Positive Displacement
Manufacturer		David Brown Union
Model		TD-60
Driver		VFD
High Pressure Pump TDH	ft H_2O (psi)	1385 to 2305 (600 to 1000)
PX Booster Pump		
PX Booster Pump Type		Multi-stage Centrifugal
Manufacturer		Energy Recovery, Inc.
Model		HP-8504
Driver		VFD
PX Booster Pump TDH		70 to 115 (30 to 50)
Energy Recovery		
Energy Recovery Devise Type		Pressure Exchanger
Manufacturer		Energy Recovery, Inc.
Model		PX-70S
Quantity	Number	2

Notes:
1. Dow Hybrid is a membrane arrangement consisting of (1) SW30HRLE-400 membrane and (1) SW30XLE-400 membrane at the feed end of a membrane vessel and (5) XUS-259124 hybrid membranes at the brine end of the vessel.
2. All membranes have a surface area of 400 ft^2 except for Koch TFC2822HF-400.
3. gpm – gallon per feet per day, gpd – gallon per day, TDH – total dynamic head, VFD – variable frequency drive, psi – pounds per square inch, ft – feet, ft^2 – square feet.

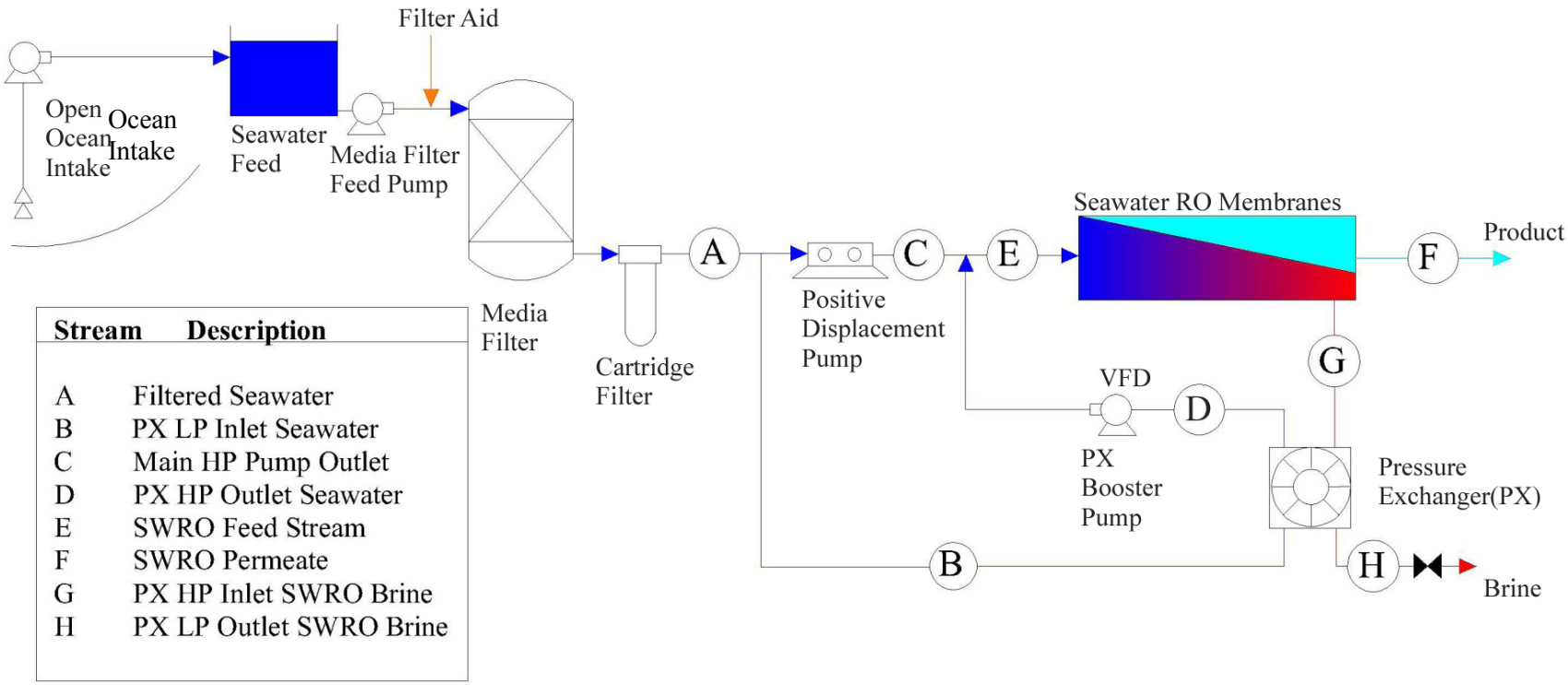

Figure 2.1 Process Flow Diagram (ADC demonstration unit with media filtration pretreatment)

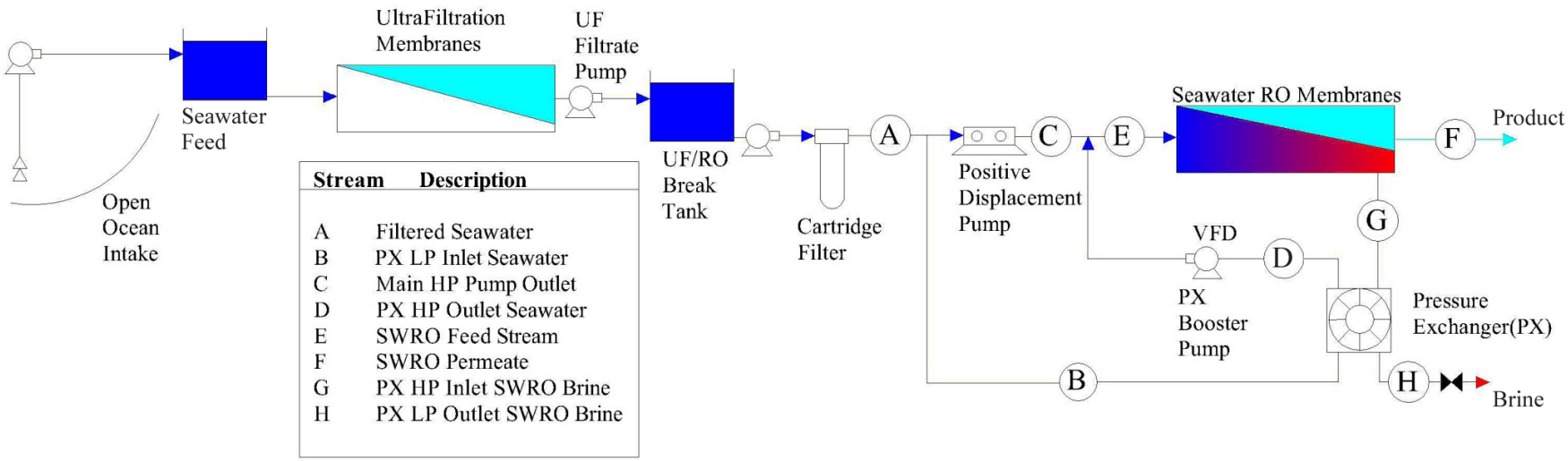

Figure 2.2 Process Flow Diagram (ADC demonstration unit with UF Membrane pretreatment)

2.1.1 SWRO Demonstration Scale Testing

2.1.1.1. Procedure for Testing Alternate Membranes and Hybrid Membrane Configuration

Demonstration scale tests of the SWRO system will occur in four, 9-week phases. As presented in Table 2.2, each phase of testing consists of the following:

Two and one half weeks (weeks 1-3) of "ripening" at the base line conditions of 7.5 gfd and 42.5% recovery. The membrane ripening period is the time required for a membrane to reach steady state flux and is used to establish a stable baseline for membrane testing. This "ripening" period has been included based upon past experience operating new membranes. Experience has indicated that approximately two and one half weeks are required before some new membrane's performance (e.g., pressure and salt rejection) reaches a steady state condition.

- Two weeks (weeks 3-5) of testing at different fluxes and recoveries. Each flux and recovery will be operated for 1 day. These flux rates includes 6, 7.5, 9 and 10 gallons per square foot of membrane area per day (gfd). Flux rate can be determined as follows:

$$F_w = \frac{Q_{P-SYS} \times 1440}{A_{SYS}} \qquad \textbf{Equation 2.1}$$

Where: F_w = Flux of water, gfd
$Q_{P\text{-}SYS}$ = SWRO system permeate flow, gpm
A_{SYS} = Membrane surface area for the SWRO system, ft^2

As indicated in Table 2.2, the recovery rate will be increased from 42.5% to 46% to 50%. Recovery rate can be determined as follows:

$$R = \frac{Q_{P-SYS}}{Q_{F-SYS}} \qquad \textbf{Equation 2.2}$$

$$Q_{F-SYS} = Q_{F-HP\,Pump} + Q_{PX\,Pump} \qquad \textbf{Equation 2.3}$$

Where: R = Recovery, %
$Q_{F\text{-}SYS}$ = SWRO system feed flow, gpm
$Q_{F\text{-}HP\ Pump}$ = High pressure positive displacement pump flow, gpm
$Q_{PX\ Pump}$ = PX booster pump flow, gpm

- Three weeks of operating at the flux and recovery determined, *through testing*, to 1) meet finished water quality goals for TDS (<200) and boron (<1.045) ; and 2) results in the most affordable point (MAP) of operation, as determined by a net present value (NPV) analysis, using the criteria identified later in this section.

At the end of the 12 point flux and recovery testing and at the end of the MAP testing, the base line conditions of 42.5% recovery and 7.5 gfd (i.e., the flux and recovery tested during weeks 1-3) will be retested to confirm membrane performance at baseline conditions.

The data gathered from these tests shall be used to develop graphs that show the power consumption rate and water quality that can be achieved at each condition. Power consumption rate shall be measured to include the following electrical loads:

- SWRO High Pressure Positive Displacement Pump (P2)
- SWRO PX Booster Pump (P3)

The following will not be included in the power consumption rate measurements

- SWRO Intake Lift Pump (P1)
- Chemical Metering Pumps
- Instrumentation and Controls
- Product water pumping
- Pretreatment pumping

While the SWRO intake lift pump may provide suction side pressure to the High Pressure Positive Displacement pump, thereby reducing the overall total dynamic head (TDH), it will not be included in the power monitoring. For the affordability analysis, an intake pump's horsepower will be assumed based upon flow and an overall lift TDH of 200 ft of H_2O.

Hydraulic conditions for the demonstration scale SWRO equipment at each test condition are presented in Table 2.3.

Table 2.2 Schedule of Tests - Alternate Membranes and Hybrid Membrane Testing

	Week 1-3	Week 4					Week 5				
Parameter	**Ripening**	**Day 1**	**Day 2**	**Day 3**	**Day 4**	**Day 5**	**Day 1**	**Day 2**	**Day 3**	**Day 4**	**Week 6-9**
PHASE 1: Toray											
Membrane	TM800-400	TM800-400	TM800-400	TM800-400	TM800-400	TM800-400	TM800-400	TM800-400	TM800-400	TM800-400	TM800-400
Flux (gfd)	7.5	6	6	6	7.5	7.5	7.5	9	9	9	TBD
Recovery	42.5%	42.5%	46%	50%	42.5%	46%	50%	42.5%	46%	50%	TBD
PHASE 2: Hydranautics											
Membrane	SWC5	SWC5	SWC5	SWC5	SWC5	SWC5	SWC5	SWC5	SWC5	SWC5	SWC5
Flux (gfd)	7.5	6	6	6	7.5	7.5	7.5	9	9	9	TBD
Recovery	42.5%	42.5%	46%	50%	42.5%	46%	50%	42.5%	46%	50%	TBD
PHASE 3: Koch											
Membrane	TFC 2822 HF-370	TFC 2822 HF-400	TFC 2822 HF-400	TFC 2822 HF-400	TFC 2822 HF-400	TFC 2822 HF-400	TFC 2822 HF-400	TFC 2822 HF-400	TFC 2822 HF-400	TFC 2822 HF-400	TFC 2822 HF-400
Flux (gfd)	7.5	6	6	6	7.5	7.5	7.5	9	9	9	TBD
Recovery	42.5%	42.5%	46%	50%	42.5%	46%	50%	42.5%	46%	50%	TBD
PHASE 4: Dow											
Membrane	Dow Hybrid	Dow Hybrid	Dow Hybrid	Dow Hybrid	Dow Hybrid	Dow Hybrid	Dow Hybrid	Dow Hybrid	Dow Hybrid	Dow Hybrid	Dow Hybrid
Flux	7.5	6	6	6	7.5	7.5	7.5	9	9	9	TBD
Recovery	42.5%	42.5%	46%	50%	42.5%	46%	50%	42.5%	46%	50%	TBD

Notes:
1. TBD = To be determined. gfd = gallon per feet per day.
2. All membranes have 400 ft^2 of surface area, except for TFC 2822 HF-370.
3. Dow Hybrid is a membrane arrangement consisting of (1) SW30HRLE-400 membrane and (1) SW30XLE-400 membrane at the feed end of a membrane vessel and (5) XUS-259124 hybrid membranes at the brine end of the vessel.
4. After the membrane ripening period, each flux and recovery point is tested for 1 day before the next change in flux and recovery test condition.

Table 2.3 Schedule of Testing Conditions – Low Pressure SWRO

Parameter	Ripen 1-2 Wks	Day 1	Day 2	Day 3	Day 4	Day 5	Day 6	Day 7	Day 8	Day 9	Day 10	Day 11	MFA 2-3 Wks
Membrane sq-ft	**400**	**Dow, Toray, Koch, Hydranautics**											
Flux, gfd	6	6	6	7.5	7.5	7.5	9	9	9	10	10	10	TBD
Recovery	42.5%	46.0%	50.0%	42.5%	46.0%	50.0%	42.5%	46.0%	50.0%	42.5%	46.0%	50.0%	TBD
Feed Pump ($Q_{F\text{-}HP\ Pump}$), gpm	36.5	36.5	36.5	45.3	45.3	45.3	54.0	54.0	54.0	59.8	59.8	59.8	TBD
PX Booster Pump, (QPX Pump), gpm	45.9	39.6	33.5	57.7	49.9	42.3	69.5	60.1	51.0	77.4	67.0	56.8	TBD
Permeate ($Q_{P\text{-}SYS}$), gpm	35.0	35.0	35.0	43.8	43.8	43.8	52.5	52.5	52.5	58.3	58.3	58.3	TBD
PX Inlet, gpm	45.9	39.6	33.5	57.7	49.9	42.3	69.5	60.1	51.0	77.4	67.0	56.8	TBD
Concentrate, gpm	47.4	41.1	35.0	59.2	51.4	43.8	71.0	61.6	52.5	78.9	68.5	58.3	TBD
Membrane sq-ft	**370**												
Feed Pump ($Q_{F\text{-}HP\ Pump}$), gpm	6	6	6	7.5	7.5	7.5	9	9	9	10	10	10	TBD
PX Booster Pump	42.5%	46.0%	50.0%	42.5%	46.0%	50.0%	42.5%	46.0%	50.0%	42.5%	46.0%	50.0%	TBD
($Q_{PX\ Pump}$), gpm	33.9	33.9	33.9	42.0	42.0	42.0	50.1	50.1	50.1	55.5	55.5	55.5	TBD
Permeate ($Q_{P\text{-}SYS}$), gpm	42.3	36.5	30.9	53.3	46.0	39.0	64.2	55.5	47.1	71.5	61.8	52.5	TBD
PX Inlet, gpm	32.4	32.4	32.4	40.5	40.5	40.5	48.6	48.6	48.6	54.0	54.0	54.0	TBD
Concentrate, gpm	42.3	36.5	30.9	53.3	46.0	39.0	64.2	55.5	47.1	71.5	61.8	52.5	TBD
	43.8	38.0	32.4	54.8	47.5	40.5	65.7	57.0	48.6	73.0	63.3	54.0	TBD

Notes:
1. TBD = To be determined based on the most affordable operating point.
2. $Q_{F\text{-}HP\ Pump}$ = High pressure positive displacement pump flow = Product flow +1.5 gpm (PX leakage).
3. $Q_{PX\ Pump}$ = PX booster pump flow= Concentrate flow gpm - 1.5 gpm (PX leakage).
4. $Q_{P\text{-}SYS}$ = SWRO system permeate flow.

2.1.1.2. High Recovery RO Process- Unbalanced Pressure Exchanger (PX) Operation

Isobaric pressure exchanger SWRO systems can be operated to achieve higher recoveries beyond 50% without violating RO membrane manufactures' typical warranties and software projection warnings. This can be achieved by unbalancing the flows entering and leaving the pressure exchanger. Figure 2.3 below shows a system where the PX is intentionally unbalanced (e.g., bleeding concentrate into the feed stream) yielding an overall system recovery (F divided by A) of 54% and a 31,900 mg/L TDS feed water, but the membrane recovery (F divided by E) is at 44% and 38,501 mg/L TDS feed water.

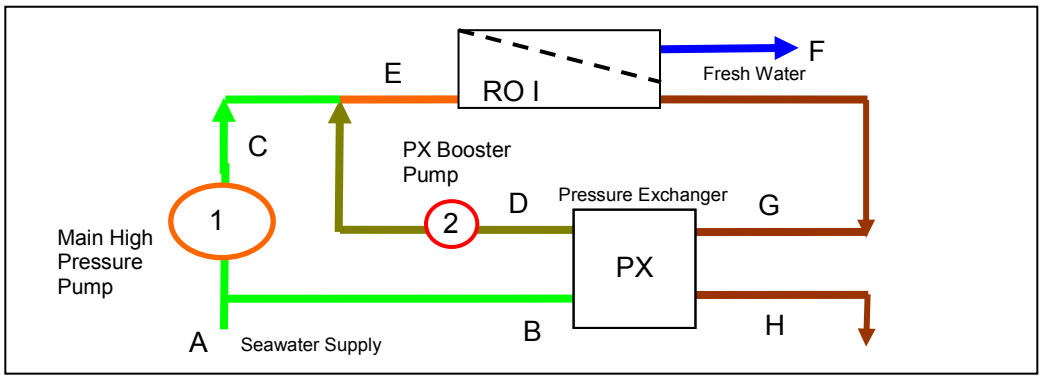

Figure 2.3 The Unbalanced Pressure Exchanger Diagram.

This data point showed promising results with an overall energy consumption of 8.03 kWh/kgal and permeate quality of 170.3 mg/l total dissolved solids (TDS). Mechanisms associated with this novel mode of operation that might lead to improved performance at higher recoveries include:

- Improved boundary layer conditions through increased velocities
- Optimal hydraulic conditions at the "low energy" recovery point
- Balanced membrane flux through increased lead element velocities
- Minimum brine flow requirements within manufacturers specifications
- Maximum allowable recoveries within manufacturers specifications

Demonstration scale tests of the unbalance PX system will occur over an approximate 15-week period. As presented in Table 2.4, each phase of testing consists of the following:

- Two weeks (weeks 1-2) of "ripening" at a typical flux and recovery rate. This "ripening" period has been included based upon past experience operating new membranes. Experience has indicated that approximately two and one half weeks are required before some new membrane's performance (e.g., pressure and salt rejection) reaches a steady state condition. If pre-ripened membranes are used in this test, this period may be

shortened or omitted accordingly. However, for the ADC tests, each set of membranes underwent the membrane ripening period to ensure a constant baseline for comparison.

- Four weeks (weeks 3-6) of testing at different fluxes and recoveries. Each flux and recovery will be operated for 1 day. The flux rates will includes 7.5 and 9 gallons per square foot of membrane area per day (gfd), which were previously determined in Phase I to be optimal flux conditions for SWRO.

Table 2.4 The Unbalanced Pressure Exchanger 44/54% Recovery Actual Datal

		A	B	C	D	E	F	G	H
Flow	gpm	81	36	45	54	99	44	55	37
	gpd	116,899	52,387	64,512	78,307	142,819	63,072	79,747	53,827
	m^3/day	442	198	244	296	541	239	302	204
Pressure	PSI	51	51	902	886	902	2.4	894	47
	bar	3.5	3.5	62.2	61.1	62.2	0.2	61.7	3.2
Quality	mg/l TDS	31,900	31,900	31,900	43,940	38,501	172.3	67,370	67,320

PX-70	QTY	**1**
PX UNIT FLOW	GPM	55
PX Internal Bypass	GPM	1
PX Differential HP si	PSI	8
PX Differential LP sic	PSI	4
PX efficiency	%	97.2
Membrane Differenti	PSI	8
RO Recovery	%	44%
System Recovery	%	54%
HIGH PRESS. PUMP		
Feed Pump eff	%	90%
Motor eff	%	93%
VFD eff	%	97%
Power	kW	20.4
BOOSTER PUMP		
Boost Pump Eff	%	60%
Motor Eff	%	90%
VFD eff	%	97%
Power	kW	0.7
Seawater Feed Pump kW		0.0

Temperature = 58ºF
Flux ~ 7.5 gfd

Total RO Process (kW)	21.1

kWh/m3 Permeate	2.12
kWh/1000 gal Permeate	8.03
kWh/acre-ft Permeate	2618

As indicated in Tables 2.5, two separate recovery rates will need to be determined and set for this test. These are the RO membrane recovery, which is determined by the PX booster pump flow and the total system recovery, which is determined by the PX LP inlet flow. The applicable equations are as follows:

$$R = \frac{Q_{P-SYS}}{Q_{F-SYS}} * 100 \qquad \textbf{Equation 2.4}$$

$$Q_{F-SYS} = Q_{P-SYS} + Q_{REJECT}$$ **Equation 2.5**

$$Q_{PXPump} = Q_{REJECT} + 1.5gpm_leakage$$ **Equation 2.6**

$$Q_{P-SYS} = Q_{F-HPPump} - 1.5gpm_leakage$$ **Equation 2.7**

Where: R = Recovery, %
$Q_{F\text{-}SYS}$ = SWRO system feed flow, gpm
$Q_{F\text{-}HP\ Pump}$ = High pressure positive displacement pump flow, gpm
$Q_{PX\ Pump}$ = PX booster pump flow, gpm
Q_{Reject} = RO membrane reject flow, gpm

Between each flux condition, the original/ripening flux and recovery (i.e., the flux and recovery tested during weeks 1-2) will be retested to confirm membrane performance at baseline conditions.

Approximately 8 weeks of operating at the flux and recovery determined, ***through testing***, to 1) meet water quality goals for TDS and boron; and 2) results in the most affordable operation, as determined by a present value analysis, using the criteria identified the earlier sections related to alternative and hybrid membrane testing.

Table 2.5 Schedule of Testing Conditions – Unbalanced PX

Parameter	1-2 Weeks Ripening	Day 1	Day 2	Day 3	Day 4	Day 5	Day 6	Day 7	Day 8	Day 9
Membrane sq-ft	400									
Flux, gfd	7.5	7.5	7.5	7.5	7.5	7.5	7.5	7.5	7.5	7.5
RO recovery	45.0%	45.0%	45.0%	45.0%	45.0%	40.0%	40.0%	40.0%	40.0%	40.0%
System Recovery	45.0%	50.0%	55.0%	60.0%	65.0%	40.0%	45.0%	50.0%	55.0%	60.0%
Feed Pump ($Q_{F\text{-}HP\ Pump}$), gpm	45.3	45.3	45.3	45.3	45.3	45.3	45.3	45.3	45.3	45.3
PX Booster Pump, (QPX Pump), gpm	52.0	52.0	52.0	52.0	52.0	64.1	64.1	64.1	64.1	64.1
Permeate ($Q_{P\text{-}SYS}$), gpm	43.8	43.8	43.8	43.8	43.8	43.8	43.8	43.8	43.8	43.8
PX Inlet, gpm	52.0	42.3	34.3	27.7	22.1	64.1	52.0	42.3	34.3	27.7
Concentrate, gpm	53.5	43.8	35.8	29.2	23.6	65.6	53.5	43.8	35.8	29.2

	Day 10	Day 11	Day 12	Day 13	Day 14	Day 15	Day 16	Day 17	Day 18	Day 19
Flux, gfd	7.5	7.5	7.5	7.5	7.5	7.5	7.5	7.5	7.5	7.5
RO recovery	40.0%	50.0%	50.0%	50.0%	50.0%	55.0%	55.0%	55.0%	60.0%	60.0%
System Recovery	65.0%	50.0%	55.0%	60.0%	65.0%	55.0%	60.0%	65.0%	60.0%	65.0%
Feed Pump ($Q_{F\text{-}HP\ Pump}$), gpm	45.3	45.3	45.3	45.3	45.3	45.3	45.3	45.3	45.3	45.3
PX Booster Pump, (QPX Pump), gpm	64.1	42.3	42.3	42.3	42.3	34.3	34.3	34.3	27.7	27.7
Permeate ($Q_{P\text{-}SYS}$), gpm	43.8	43.8	43.8	43.8	43.8	43.8	43.8	43.8	43.8	43.8
PX Inlet, gpm	22.1	42.3	34.3	27.7	22.1	34.3	27.7	22.1	27.7	22.1
Concentrate, gpm	23.6	43.8	35.8	29.2	23.6	35.8	29.2	23.6	29.2	23.6

	Day 20	Baseline Day 21	Day 22	Day 23	Day 24	Day 25	Day 26	Day 27	Day 28	Day 29
Flux, gfd	7.5	7.5	9	9	9	9	9	9	9	9
RO recovery	65.0%	45.0%	40.0%	40.0%	40.0%	40.0%	40.0%	40.0%	45.0%	45.0%
System Recovery	65.0%	45.0%	40.0%	45.0%	50.0%	55.0%	60.0%	65.0%	45.0%	50.0%
Feed Pump ($Q_{F\text{-}HP\ Pump}$), gpm	45.3	45.3	54.0	54.0	54.0	54.0	54.0	54.0	54.0	54.0
PX Booster Pump, (QPX Pump), gpm	22.1	52.0	77.3	77.3	77.3	77.3	77.3	77.3	62.7	62.7
Permeate ($Q_{P\text{-}SYS}$), gpm	43.8	43.8	52.5	52.5	52.5	52.5	52.5	52.5	52.5	52.5
PX Inlet, gpm	22.1	52.0	77.3	62.7	51.0	41.5	33.5	26.8	62.7	51.0
Concentrate, gpm	23.6	53.5	78.8	64.2	52.5	43.0	35.0	28.3	64.2	52.5

15

Table 2.5 Schedule of Testing Conditions – Unbalanced PX

-	Day 30	Day 31	Day 32	Day 33	Day 34	Day 35	Day 36	Day 37	Day 38	Day 39
Flux, gfd	9	9	9	9	9	9	9	9	9	9
RO recovery	45.0%	45.0%	45.0%	50.0%	50.0%	50.0%	50.0%	55.0%	55.0%	55.0%
System Recovery	55.0%	60.0%	65.0%	50.0%	55.0%	60.0%	65.0%	55.0%	60.0%	65.0%
Feed Pump ($Q_{F\text{-}HP\ Pump}$), gpm	54.0	54.0	54.0	54.0	54.0	54.0	54.0	54.0	54.0	54.0
PX Booster Pump, (QPX Pump), gpm	62.7	62.7	62.7	51.0	51.0	51.0	51.0	41.5	41.5	41.5
Permeate ($Q_{P\text{-}SYS}$), gpm	52.5	52.5	52.5	52.5	52.5	52.5	52.5	52.5	52.5	52.5
PX Inlet, gpm	41.5	33.5	26.8	51.0	41.5	33.5	26.8	41.5	33.5	26.8
Concentrate, gpm	43.0	35.0	28.3	52.5	43.0	35.0	28.3	43.0	35.0	28.3

-	Day 40	Day 41	Day 42	Baseline Day 43	7-15 Weeks MAP
Flux, gfd	9	9	9	7.5	TBD
RO recovery	60.0%	60.0%	65.0%	45.0%	TBD
System Recovery	60.0%	65.0%	65.0%	45.0%	TBD
Feed Pump ($Q_{F\text{-}HP\ Pump}$), gpm	54.0	54.0	54.0	45.3	TBD
PX Booster Pump, (QPX Pump), gpm	33.5	33.5	26.8	52.0	TBD
Permeate ($Q_{P\text{-}SYS}$), gpm	52.5	52.5	52.5	43.8	TBD
PX Inlet, gpm	33.5	26.8	26.8	52.0	TBD
Concentrate, gpm	35.0	28.3	28.3	53.5	TBD

Notes:
1. Maximum system pressure is 1200 psi. If any point exceeds 1200 psi system will shutdown and point will need to be skipped.
2. Flows assume 400 sq-ft membrane
3. $Q_{F\text{-}HP\ Pump}$ = High pressure positive displacement pump flow = Product flow +1.5 gpm (PX leakage).
4. $Q_{PX\ Pump}$ = PX booster pump flow= Concentrate flow gpm - 1.5 gpm (PX leakage).
5. QP-SYS = SWRO system permeate flow.

16

Table 2.6 Interstage Booster-Pressure Exchanger Hybrid Power Model

		A	B	C	D	E	F	G	H	I	J	K	L	M	K+E
Flow	gpm	55	31	31	17	14	24	24	24	17	41	17	25	25	31
	gpd	79,600	44,800	44,800	24,640	20,160	34,800	34,800	34,800	24,640	59,440	23,776	35,664	36,240	43,936
	m^3/day	301	170	170	93	76	132	132	132	93	225	90	135	137	166
Pressure	psi	30	30	719	702	0	30	987	1023	1023	1023	0	997	20	0
	bar	2.1	2.1	49.6	48.4	0.0	2.1	68.1	70.6	70.6	70.6	0.0	68.8	1.4	0.0
Quality		33,073	33,073	33,073	60,038	120	33,073	35,752	35,752	60,038	45,820	164	74,293	69,464	144
HP PUMP 1					PX-70		QTY	1							
Feed Pump efficiency		**90%**			**PX UNIT FLOW**		GPM	24.8							
Motor efficiency		**93%**			PX Total Internal Bypass		gpm	1.0							
Power		kW	11.1		PX Salinity Increase		%	6.5%							
					PX Differential HP side		psi	10							
PX BOOSTER PUMP 2					PX Differential LP side		psi	10							
Boost Pump Efficiency		**65%**			Membrane Differential I		psi	17							
Motor Efficiency		**92%**			Membrane Differential II		psi	26							
Power		kW	0.6		Recovery I		%	45.0%							
					Recovery II		%	40.0%							
INTERSTAGE BOOSTER PUMP 3					Overall Recovery		%	**55.2%**							
Interstage boost		psi	321												
Boost Pump Efficiency		**65%**			**Total Power (kW)**			**15.8**							
Motor Efficiency		**92%**			**kWh/m^3 Permeate**			**2.28**							
Power		kW	4.0		**kWh/kgal Permeate**			**8.62**							

2.1.1.3. Procedure for Testing UF Pretreatment

The UF system will be operated at the design capacity (216,000 gpd) for the duration of the test program, should UF system performance allow. Excess permeate shall overflow from the break tank between the UF and SWROP system. Minimum permeate production for any SWRO test period shall be the required SWRO daily feed requirement plus 10%.

Initial operation shall be without pretreatment (in-line coagulation) at a flux of 20 gfd. Initial conditions are summarized in Table 2.7. A 1-week pretest period will be used to determine if initial operating conditions will meet evaluation criteria for the UF system as shown in Table 2.8.

Table 2.7 Summary of Off-line Intermittent UF Unit Operations

Variable	Initial Setpoint	Note
Flux	20 gfd	At ambient temperature (not corrected)
Backpulse	TBD (120 minutes max.)	Based on performance
Tank Drain	Approx. 60 minutes	Based on membrane tank volume and feed water recovery
Maintenance Cleaning	Minimum 24 hrs.	Chemical, dose and duration selected based on performance
Integrity Testing	As needed	No set interval. Testing will be conducted only if permeate turbidity or SDI criteria are exceeded.

Table 2.8 UF Membrane Evaluation Criteria

Criteria	Goal
CIP Interval	30 days
Recovery	95%
Turbidity	Less than 0.1 NTU at all times.
SDI	<3 at all times

In order to evaluate UF membrane performance against these criteria the parameters presented in Table 2.9 shall be collected.

Table 2.9 UF Membrane System Data Collection Requirements

Parameter	Minimum Frequency	Timing: Start and End of Filtration Cycle	Timing: During BP
Membrane System Data[1]			
Permeate Pump Flow Rate (gpm)	2/BP Cycle	X	
Instantaneous Flux (gfd)	3/BP Cycle	X	X
Temperature Normalized Flux (gfd at 20°C)	2/BP Cycle	X	
Specific Flux (gfd/psi)	3/BP Cycle	X	X
Normalized Specific Flux (gfd/psi at 20°C)	3/BP Cycle	X	X
Transmembrane Pressure (psi)	3/BP Cycle	X	X
Water Temperature (°C)	2/BP Cycle	X	
Backpulse Pump Flow Rate (gpm)	1/BP Cycle		X
Backpulse Duration	1/BP Cycle		X
Air Scour Rate			X
Air Scour Duration			X
Cell/tank Drain Duration	1/Day		X
Tank Drain Volume (gallons)	1/Day		

BP Cycle = Time from end of backpulse to end of next backpulse. Duration to vary based on BP setpoint
NA = Not Applicable

Note:
1. Data to be monitored continuously throughout the duration of each test period on the UF unit data acquisition system. Data will be made available remotely.

Pretreatment (in-line coagulation) of the UF system feed water can improve performance in terms of CIP interval and energy consumption by reducing the rate of membrane fouling. It is not known under which, or any, feed water conditions pretreatment will be required for the UF system to meet minimum SWRO requirements. Therefore, prior to operation of the SWRO system, an evaluation of the UF system will be conducted. This will include operation of the UF system with and without coagulant. The experimental matrix is provided in Table 2.10.

Table 2.10 UF Pretreatment (In line coagulation) Evaluation

Pre-test Period	Duration	Coagulant Dose (mg/L)	Minimum Flocculation Time (minutes)
1	1 week	0	0
2	1 week	5	10
3	1 week	10	10
4	1 week	15	10

This will provide information on membrane system response to in-line coagulation should water quality events (e.g. elevated turbidity, algae, TOC) that increase the rate UF membrane fouling are observed over the course of testing. Because sustainable flux rates selected for design of the UF system are estimated, this testing will provide preliminary information used to respond to these events, and minimize SWRO pilot downtime.

A variety of coagulants can be used with the UF membrane system. These may include alum, ferric salts, or polyaluminum compounds. Coagulants will be selected based on UF system supplier preference, as the main goal is to enhance UF system performance. The selected coagulant shall be dosed at levels of 5, 10, and 15 mg/L each for a 1-week period. Coagulant doses will be evaluated based a comparison of observed membrane fouling trends. Residual aluminum or iron levels will be used as a secondary criterion if they are found to be present at levels that may impact SWRO performance.

The UF system may be equipped to vary flux rates either by decreasing the membrane area by isolating tanks or modules at a constant flow rate or by producing permeate in excess of 216,000 gpd. If so equipped, the UF system flux shall be evaluated with the following procedure:

- Increase flow with fixed number of modules in service or decrease number of modules at fixed flow rate. Minimum flow rate shall be SWRO unit demand plus 10%. Flux shall not be increased more than 15% over a setpoint that is known to meet evaluation criteria.
- Operate at fixed conditions until one of the following criteria are met
- Continuous operation for 30 days without a CIP
- The system goes into declining flux (flow) mode
- Terminal transmembrane pressure is reached (approximately -12 psi)
- Other evaluation criteria are not met

If the UF system fails to meet any of the evaluation criteria take one of the following steps:

- Perform recovery clean (CIP), initiate run with in-line coagulation. Flow procedure above.

-or-

- Perform CIP, initiate run at lower flux

If the UF system meets evaluation criteria:

- Perform CIP, initiate run at increased flux

-or-

- Perform CIP, initiate run with lower coagulant dose

2.2 Testing Operation and Monitoring

Hydraulic and water quality data will be collected to evaluate the operation of the demonstration scale equipment relative to the project goals for power consumption and treated water quality. These data shall be collected by the staff at the U.S. Naval Desalination Test Facility in Port Hueneme, California and evaluated by Carollo Engineers.

Table 2.11 presents a matrix for monitoring hydraulic data from the demonstration scale SWRO equipment. Hydraulic data collected from this equipment consists of both pressure and flow data. The frequency of monitoring for each type of data is presented based upon the day of the week. In general, data shall be collected once daily during the weekdays. Flow meter calibration shall be checked at least weekly using a graduated bucket and a stopwatch.

Hydraulic data shall be recorded in the data log presented in Appendix A. The data log shall be transposed into the data spreadsheet presented in Appendix B. The data spreadsheet shall be emailed weekly (i.e., Friday) to Carollo Engineers for data evaluation.

Water quality data shall be collected at the locations and frequencies presented in Tables 2.12, 2.13 and 2.14 and analyzed by the methods presented in Table 2.15. These data shall then be recorded in the data logs (Appendix A) and transposed to the spreadsheet in Appendix B. The data spreadsheet shall be emailed weekly (i.e., Friday) to Carollo Engineers and the respective membrane provider for data evaluation. One sampling for TOC, iron, manganese, and aluminum from the sea water intake feed every nine weeks will also be provided. The test membrane company contacts are as follows:

- Zenon (annyse.balkwill@ge.com)
- Toray Membrane (gulizia.lynne@toraymem.com)
- Hydranautics (cbartels@hydranautics.com)
- Koch Membrane (rklesan@kochmembrane.com)
- Dow FilmTec (sdcoker@dow.com)

Table 2.11 Hydraulic Monitoring - SWRO System

Parameter	Unit	Manual Data Collection Frequency							Data Logger
		Sunday	Monday	Tuesday	Wednesday	Thursday	Friday	Saturday	
Pressure									
$P_{MF\text{-}in}$	psig	-	1x	1x	1x	1x	1x	-	
$P_{MF\text{-}out}$ / $P_{CF\text{-}in}$	psig	-	1x	1x	1x	1x	1x	-	
$P_{CF\text{-}out}$	psig	-	1x	1x	1x	1x	1x	-	
$P_{PX\text{-}out}$	psig	-	1x	1x	1x	1x	1x	-	
$P_{F\text{-}SYS}$	psig	-	1x	1x	1x	1x	1x	-	PT1
$P_{C\text{-}SYS}$	psig	-	1x	1x	1x	1x	1x	-	PT2
$P_{P\text{-}SYS}$	psig	-	1x	1x	1x	1x	1x	-	
Flow									
$Q_{F\text{-}HP\ Pump}$	gpm	-	1x	1x	1x	1x	1x	-	
$Q_{PX\ IN}$ =	gpm		1x	1x	1x	1x	1x		FT2
$Q_{PX\ Pump}$	gpm	-	1x	1x	1x	1x	1x	-	FT5
$Q_{P\text{-}SYS}$	gpm	-	1x	1x	1x	1x	1x	-	FT4
Power Consumption	kWh	-	1x	1x	1x	1x	1x	-	AM1

Notes:
1. $P_{MF\text{-}in}$ = Pressure on the influent side of the media filters (PI1a)
2. $P_{MF\text{-}out}$ / $P_{CF\text{-}in}$ = Pressure on the effluent side of the media filters / Pressure on the inlet side of the cartridge filters (PI1b)
3. $P_{CF\text{-}out}$ = Pressure on the effluent side of the cartridge filters (PI1c)
4. $P_{PX\text{-}out1}$ = Feed water pressure after the PX but before the PX booster pump (PI2a)
5. $P_{PX\text{-}out2}$ = Brine pressure leaving the PX, before the recovery control valve (PI3b)
6. $P_{F\text{-}SYS}$ = SWRO system feed pressure (PI2b)
7. $P_{C\text{-}SYS}$ = SWRO system concentrate pressure before the PX and the recovery control valve (PI2c)
8. $P_{P\text{-}SYS}$ = SWRO system permeate pressure
9. $Q_{F\text{-}HP\ Pump}$ = High pressure positive displacement pump flow (FI3)
10. $Q_{PX\ IN}$ = Flow into the PX (FI2)
11. $Q_{PX\ Pump}$ = PX booster pump flow (FI5)
12. $Q_{P\text{-}SYS}$ = SWRO system permeate flow (FI4)
13. Power consumption will be calculated based on hydraulic data collected. On line measurements are taken from the Amp Meter.
14. Facility monitoring during weeks 3-6 will be required once per day.

Table 2.12 Water Quality Monitoring (Weeks 1-3 & 7-9) - SWRO System

		Manual Data Collection Frequency															
		Sunday		Monday		Tuesday		Wednesday		Thursday		Friday		Saturday			
Parameter	Unit	Location	No. of Times	Location	No. of Times	Location	No. of Times	Location	No. of Times	Location	No. of Times	Location	No. of Times	Location	No. of Times	No. of Samples Per Week	Data Logger
Temperature	°C (°F)	-	NS	SC5, SC6, SC11	1x	SC5, SC6, SC11	1x	SC5, SC6, SC11	1x	SC5, SC6, SC11	1x	SC5, SC6, SC11	1x	-	NS	15	
pH		-	NS	SC3, SC4, SC5, SC6, SC7, SC11	1x	SC3, SC4, SC5, SC6, SC7, SC11	1x	SC3, SC4, SC5, SC6, SC7, SC11	1x	SC3, SC4, SC5, SC6, SC7, SC11	1x	SC3, SC4, SC5, SC6, SC7, SC11	1x	-	NS	25	CT1
Conductivity	mS/cm	-	NS	SC3, SC4, SC5, SC6, SC7, SC11	1x	SC3, SC4, SC5, SC6, SC7, SC11	1x	SC3, SC4, SC5, SC6, SC7, SC11	1x	SC3, SC4, SC5, SC6, SC7, SC11	1x	SC3, SC4, SC5, SC6, SC7, SC11	1x	-	NS	25	
Total Dissolved Solids	mg/L	-	NS	SC1, SC3	1x	SC1, SC3	1x	SC1, SC3	1x	SC1, SC3	1x	SC1, SC3	1x	-	NS	15	NTU1
Turbidity	NTU	-	NS	SC3	1x	SC3	1x	SC3	1x	SC3	1x	SC3	1x	-	NS	5	
Silt Density Index		-	NS	SC3, SC5, SC11	1x					SC3, SC5, SC11	1x			-	NS	6	
Boron	mg/L	-	NS	SC3, SC5, SC11	1x					SC3, SC5, SC11	1x			-	NS	6	
Bromide	mg/L	-	NS							SC5	1x			-	NS	1	
Total Organic Carbon	mg/L	-	NS							SC5	1x			-	NS	1	
Iron	mg/L	-	NS							SC5	1x			-	NS	1	
Manganese	mg/L	-	NS							SC5	1x			-	NS	1	
Aluminum	mg/L	-	NS							SC3, SC11	1x			-	NS	2	
Calcium	mg/L	-	NS							SC3, SC11	1x			-	NS	2	
Magnesium	mg/L	-	NS							SC3, SC11	1x			-	NS	2	
Sodium	mg/L	-	NS							SC3, SC11	1x			-	NS	2	
Potassium	mg/L	-	NS							SC3, SC11	1x			-	NS	2	
Alkalinity	mg/L as $CaCO_3$	-	NS							SC11	1x			-	NS	1	
Carbon Dioxide	mg/L	-	NS							NA	1x			-	NS	NA	
Carbonate	mg/L	-	NS							NA	1x			-	NS	NA	
Bicarbonate	mg/L	-	NS							SC3, SC11	1x			-	NS	2	
Sulfate	mg/L	-	NS							SC3, SC11	1x			-	NS	2	
Chloride	mg/L	-	NS							SC3, SC11	1x			-	NS	2	
Fluoride	mg/L	-	NS	SC5, SC6, SC11	1x	SC5, SC6, SC11	1x	SC5, SC6, SC11	1x	SC5, SC6, SC11	1x	SC5, SC6, SC11	1x	-	NS	15	

Notes:
1. NS = No Sample
2. NA = Not applicable (e.g., value calculated)
3. Sample connection numbers per Harn P&ID revision 2, 4-19-05.

Table 2.13 Water Quality Monitoring (Weeks 3-6)

Parameter	Unit	Daily Sampling Locations [1]	No. of Times	No. of Samples Per Week
Temperature	^oC (^oF)	TI1	1x per day	5
pH		SC5, SC6, SC11	1x per day	15
Conductivity	MS/cm	SC3, SC4, SC5, SC6, SC7, SC11	1x per day	30
Total Dissolved Solids	mg/L	SC3, SC4, SC5, SC6, SC7, SC11	1x per day	30
Turbidity	NTU	SC1, SC3	1x per day	10
Silt Density Index		SC3	1x per day	5
Boron	mg/L	SC3, SC5, SC11	1x every 2 days	6
Bromide	mg/L	SC3, SC5, SC11	1x every 2 days	6
Total Organic Carbon	mg/L	SC5	1x every 2 days	2
Iron	mg/L	SC5	1x every 2 days	2
Manganese	mg/L	SC5	1x every 2 days	2
Aluminum	mg/L	SC5	1x every 2 days	2
Calcium	mg/L	SC3, SC11	1x every 2 days	4
Magnesium	mg/L	SC3, SC11	1x every 2 days	4
Sodium	mg/L	SC3, SC11	1x every 2 days	4
Potassium	mg/L	SC3, SC11	1x every 2 days	4
Alkalinity	mg/L as $CaCO_3$	SC3, SC11	1x every 2 days	4
Carbon Dioxide	mg/L	SC11	1x every 2 days	2
Carbonate	mg/L	NA	1x every 2 days	NA
Bicarbonate	mg/L	NA	1x every 2 days	NA
Sulfate	mg/L	SC3, SC11	1x every 2 days	4
Chloride	mg/L	SC3, SC11	1x every 2 days	4
Fluoride	mg/L	SC3, SC11	1x every 2 days	4

Notes:
1. Testing during Weeks 3-6 requires once daily.
2. Sample connection numbers per Harn P&ID revision 2, 4-19-05.

Table 2.14 UF System Water Quality Monitoring Schedule

Parameter	Unit	Daily Sampling Locations	No. of Times
No Coagulant Runs			
Temperature	^oC (^oF)	Permeate	Continuous
pH		Raw	1x per day
Turbidity	NTU	Raw/Permeate	Continuous
Silt Density Index		Permeate	1x per day
Total Organic Carbon	mg/L	Raw	1x every 2 days
UV_{254} Absorbance	m^{-1}	Raw/Permeate	1x every 2 days
Iron	mg/L	Raw	1x every 2 days
Aluminum	mg/L	Raw	1x every 2 days
Manganese	mg/L	Raw	1x every 2 days
Calcium	mg/L	Raw	1x every 2 days
Inline coagulation Runs			
Temperature	^oC (^oF)	Permeate	Continuous
pH		Raw/Feed	1x per day
Turbidity	NTU	Raw/Permeate	Continuous
Silt Density Index		Permeate	1x per day
Total Organic Carbon	mg/L	Raw	1x every 2 days
UV_{254} Absorbance	m^{-1}	Raw/Permeate	1x every 2 days
Iron	mg/L	Raw	1x every 2 days
Aluminum	mg/L	Raw	1x every 2 days
Manganese	mg/L	Raw	1x every 2 days
Calcium	mg/L	Raw	1x every 2 days
Alkalinity	mg/L as $CaCO_3$	Raw	1x every 2 days
Carbonate	mg/L	Raw	1x every 2 days
Bicarbonate	mg/L	Raw	1x every 2 days

Table 2.15 Water Quality Testing Methods

Parameter	Method	
	Seawater [1]	RO Permeate
Temperature, ^{o}C	SM 2550	N/A
pH	SM 4500-H^+	SM 4500-H^+
Conductivity, μS/cm	SM 2510	SM 2510
TDS, mg/L	SM 2540C	SM 2540C
Turbidity, NTU	SM 2130	N/A
Silt Density Index	ASTM D4189-95	N/A
Boron, mg/L	EPA 200.7	EPA 200.7
Bromide, mg/L	EPA 300.0	EPA 300.0
Total Organic Carbon, mg/L	SM 5310C	SM 5310C
Iron, mg/L	EPA 200.7	EPA 200.7
Manganese, mg/L	EPA 200.7	EPA 200.7
Aluminum, mg/L	EPA 200.7	EPA 200.7
Calcium, mg/L	EPA 200.7	EPA 200.7
Magnesium, mg/L	EPA 200.7	EPA 200.7
Sodium, mg/L	EPA 200.7	EPA 200.7
Potassium, mg/L	EPA 200.7	EPA 200.7
Alkalinity, mg/L as $CaCO_3$	SM 2320B/EPA 310.1	SM 2320B/EPA 310.1
Carbon Dioxide, mg/L	SM4500-CO2-D	SM4500-CO2-D
Carbonate, mg/L	SM 2320B/EPA 310.1	SM 2320B/EPA 310.1
Bicarbonate, mg/L	SM 2320B/EPA 310.1	SM 2320B/EPA 310.1
Sulfate, mg/L	EPA 300.0	EPA 300.0
Chloride, mg/L	EPA 300	EPA 300.0
Fluoride, mg/L	SM4500F-C	SM4500F-C/EPA 300.0

Notes:

SM = *Standard Methods* for the Examination of Water and Wastewater, 20th Edition
ASTM = American Society for Testing and Materials
N/A = Not applicable

1. At least a 1:100 dilution for metals, cations and anions measured using EPA Method 200.7 due to a sodium interference. No dilution is required for conductivity, pH, turbidity, SDI, TOC, alkalinity and fluoride.

Water quality samples requiring analysis by a local, outside lab shall be shipped to a certified testing laboratory (to be determined).

Samples should be collected in a 125 ml polypropylene bottle, filled to the top with no headspace. Preserve samples in accordance with the standards reference in Table 2.16, bubble wrapped and shipped in a cooler overnight to the laboratory. Label sample bottles using a permanent marker with the:

- Location they were collected (e.g., “Raw”, “Feed”, “Permeate”, “PX Booster Pump Discharge”),
- Date collected,
- Return authorization number (RA #) provided by lab.

Standard laboratory quality assurance and quality control procedures shall be practiced. Laboratory instruments shall be calibrated in a manner consistent with the Standard or EPA method procedure. Duplicate and blank samples shall be analyzed as required by the testing method. On-line instruments shall be calibrated as recommended by the instrument manufacturer’s specifications.

2.3 Membrane Cleaning & Storage

2.3.1 SWRO Membranes

Membrane cleaning will be performed if benchmark testing (i.e., conducted between test during weeks 3-5) indicates a higher differential pressure across the RO system when compared to the initial (Weeks 1 through 3) test performance. Membrane cleaning procedures will be per the recommendations of the respective membrane supplier. A summary of cleaning procedures provided by each membrane supplier is provided in Appendix C.

The ADC may conduct more testing at other sites in the future. Membranes shall be stored to ensure that they will be able to perform for these future studies. Per manufacturer’s request, tested membranes will be returned after the study and the following procedures shall be followed for membrane storage:

- Unless the elements have experienced significant performance decline it should not be necessary to clean the elements prior to storage. However, elements will be flushed with stored permeate (in the CIP/suck back tank) until a TDS less than 800 mg/L is recorded from at the membrane feed sample location.
- If enough stored permeate remains, the CIP tank will be used to flush the membrane elements with a 1 to 1.5% bisulfite solution. If there is not enough stored permeate remaining, upon removal from the pressure vessels, the elements should be drained of excess water by standing on end after removal from the pressure vessel. The elements should then be submerged in a small tank or barrel of 1 to 1.5% sodium bisulfite/permeate

solution for a minimum of 1 hour. The element will be lifted, drained, and re-submerged 2-3 times during the soak time to enhance distribution of the preservative solution.

- The elements will arrive sealed in oxygen barrier bags that can be reused to store the elements. As much excess air as possible should be removed from the bag prior to sealing it with tape. If possible, bags should be vacuum-sealed.
- For optimal storage conditions the bagged elements should be stored out of direct sunlight at a temperature <25°C.
- For long-term storage, 2 elements should be opened and the pH determined of the residual preservative solution every 2-3 months. If the pH drops below 3, the elements should be re-preserved.

2.3.2 UF Membranes

In the case that the UF membrane unit needs to be shut down for an extended period of time (greater than 1 week) during the test period, they need to be properly stored to avoid irreversible fouling and possible damage from drying. The demonstration unit has a storage mode that will initiate all maintenance procedures required to keep the membrane in working condition. Zenon will supply specific procedures. Basic house keeping will be required during shutdown periods including:

- A source of feed water for intermittent use by the membrane unit
- Sodium hypochlorite storage tanks will need to be checked on a daily basis and kept full.

2.4 Determining Affordability

A present value analysis will be conducted to establish the most affordable operating condition, which accounts for both capital and operations costs. This analysis shall be conducted at the following times to determine the most affordable operating point:

- **After the completion of 12 flux and recovery tests** that are conducted on weeks 3 through 5 to determine the operating condition for weeks 6 through 9. The present value analysis shall be based upon data collected from the demonstration scale equipment.

Only flux and recovery data points that produce a minimum water quality of < 200 mg/l TDS and <1.045 mg/l Boron will be considered as candidates for the 2-3 week MAP demonstration point.

The criteria presented in Table 2.16 shall be the basis for the present value analysis. Table 2.17 lists the annual replacement rate for membranes as a function of the recoveries. These assumptions will be assumed in the present value analysis model.

Table 2.16 Present Value Analysis Criteria

Criteria	Value
Project Size	10 and 50 MGD
Capital Cost	
Pretreatment [1]	To be developed based on UF equipment cost
Desalination Plant [2]	To be developed using WTCOST based upon demonstration test condition
Project Life	20 years
Bond Payment Period	20 years
Interest [3]	3.5%
Inflation [4]	3%
Construction Contingencies	15% of capital cost
Contractor OH&P	10% of capital cost
Engineering & Const. Mgmt.	25% of capital cost
Annual Maintenance Costs	1.5% of the capital cost
Power Cost	Co-located: $0.08 per kWhr Not Co-located: $0.12 per kWhr
Intake Lift Pump TDH	200 ft H_2O
High Service Pump TDH	200 ft H_2O
Intake/High Service Pump Efficiency	TBD
Intake/High Service Lift Pump Motor Efficiency	TBD
Membrane Life	Varies based upon flux & recovery See Table 2.12
Membrane Element Cost	Varies based upon membrane type and project size; Will generally range from $450 to $650 per element
No. of Plant Staff and Salary	10 MGD: 14 @ $55,000 per year
	50 MGD: 25 @ $55,000 per year
Labor overhead multiplier	x 1.75
Sodium Hypochlorite Dose (pretreatment)	2 mg/L
Sodium Hypochlorite Cost	$1.2 per pound

Table 2.16 Present Value Analysis Criteria

Criteria	Value
Sodium Bisulfite Dose [5]	4.6 mg/L
Sodium Bisulfite Cost	$0.30 per pound
Cartridge Filter Loading Rate	3 gpm per 10-inches
Cartridge Filter Cost	$3 per 10-inches
Cartridge Filter Life	Determined during demonstration test
Carbon Dioxide Dose	16 mg/L
Carbon Dioxide Cost	$0.04 per pound
Lime Dose	44 mg/L
Lime Cost	$0.05 per pound
Sodium Hypochlorite Dose (post treatment)	1.5 mg/L

NOTES:
1. Based upon UF membrane pretreatment.
2. Includes costs for RO equipment, CIP equipment, building, process electrical and instrumentation, yard piping, post treatment chemical facilities, 5-MG of ground storage and high service pumping.
3. Interest rate based upon state revolving loan fund.
4. Inflation based upon historic ENR cost index inflation over 50 years. Inflation will be applied annually.
5. Assumes no chlorine demand. 4.6 mg/L of SBS will quench 2 mg/L of Cl_2.
6. WTCOST is a Water Treatment Cost Estimation Program developed by the United States Bureau of Reclamation and can be found at www.usbr.gov/pmts/water/media/spreadsheets/WaTER.xls.
7. OH&P = Overhead and Profit, TDH = Total Dynamic Head.

Table 2.17 Membrane Life & Annual Replacement Rate

	Flux					
	6 GFD		7.5 GFD		9 GFD	
Recovery	CARR[1]	Membrane Life	CARR[1]	Membrane Life	CARR[1]	Membrane Life
35%	7%	6.5 yrs	8%	6.25 yrs	9%	6 yrs
42.5%	9%	6 yrs	10%	5.75 yrs	11%	5.5 yrs
50%	11%	5.5 yrs	12%	5.25 yrs	13%	5 yrs

Note:
1. Cumulative Annual Replacement Rate (CARR). The percentage of membrane elements that would be replaced to maintain a performance requirement (i.e., permeate quality and energy) for a 5-year warranty.

Appendix A

DATA SHEETS

ADC II Hydraulic Data Sheet

TIME			TEMP	PRESSURES										FLOWS				MAIN PANEL KW METER				VFD KW METER			
		Operation		PMF-in	PMF-out	PCF-in	PCF-out	PX-Feed	PX-conc	X-boost s	PF-SYS	PC-SYS	PP-SYS	F-HP Pun	QPX Pump	Feed PX-	QP-SYS	Asys	P HP/PX	P booster	Power	PX power	HP Power	Feed Pump	
Date	Time	Time	Influent	(psi)	(psi)	(psi)	(psi)	(psi)	(psi)	(psi)	(psi)	(psi)	(psi)	(gpm)	(gpm)	(gpm)	(gpm)	amp	(kw)	(kw)	Factor	(kw)	(kw)	(kw)	Notes
MM/DD/YY	hh:mm	hh.hh	Temp F	1	2	3	4	5	6	7	8	9	10	11	12	13	14	15	16	17	18	19	20	21	

ADC II Water Quality Data Sheet

TIME			pH			CONDUCTIVITY						TDS						TURBIDITY		SDI	OTHER					
		Operation	pH			Conductivity (mS/cm)						TDS (mg/L)						Turbidity (NTU)		Density Index		Inhibitor Pump	HP VFD	PX VFD	FEED VFD	
Date	Time	Time	pHF-sys	pHP-sys	pHC-sys	CCF-out	CF-PX-ou	CF-sys	CP-sys	CC-sys	CC-PX-ou	TDSCF-ou	DSF-PX-o	TDSF-sys	TDSP-sys	TDSC-sys	DSC-PX-o	NTUMF-in	NTUCF-ou	SDICF-ou	VTANK	Speed	Speed	Speed	Speed	
MM/DD/YY	hh:mm	hh.hh	SC5	SC11	SC6	SC3	SC4	SC5	SC11	SC6	SC7	SC3	SC4	SC5	SC11	SC6	SC7	CART	meter	CART	(gallons)	(gph)	(Hertz)	(Hertz)	(Hertz)	Notes

Appendix B

PROCESS AND INSTRUMENTATION DIAGRAMS

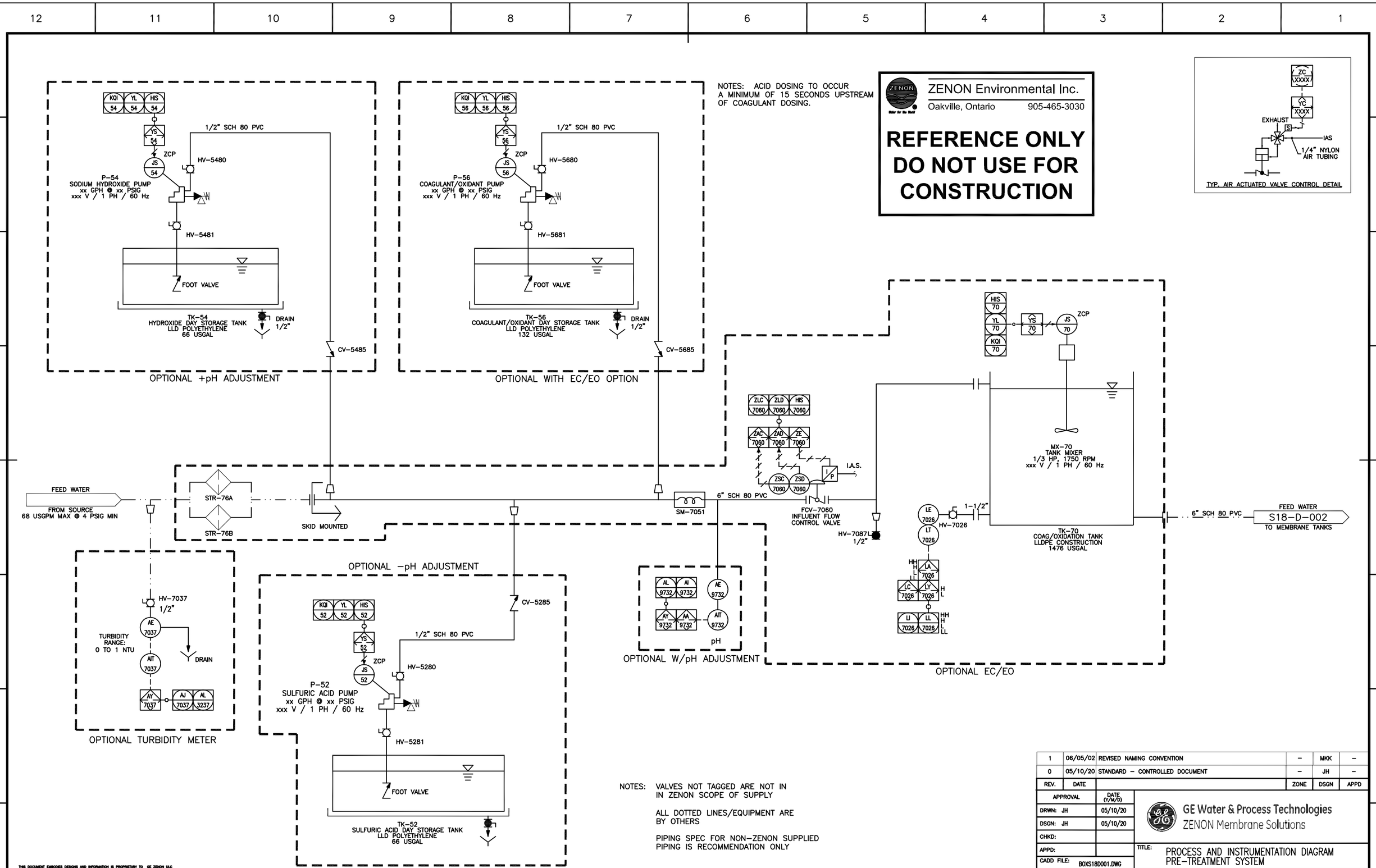
KQI 54
YL 54
HIS 54
YS 54
ZCP
JS 54
1/2" SCH 80 PVC
HV-5480
P-54
SODIUM HYDROXIDE PUMP
xx GPH @ xx PSIG
xxx V / 1 PH / 60 Hz
HV-5481
FOOT VALVE
TK-54
HYDROXIDE DAY STORAGE TANK
LLD POLYETHYLENE
66 USGAL
DRAIN 1/2"
CV-5485
OPTIONAL +pH ADJUSTMENT
KQI 56
YL 56
HIS 56
YS 56
ZCP
JS 56
1/2" SCH 80 PVC
HV-5680
P-56
COAGULANT/OXIDANT PUMP
xx GPH @ xx PSIG
xxx V / 1 PH / 60 Hz
HV-5681
FOOT VALVE
TK-56
COAGULANT/OXIDANT DAY STORAGE TANK
LLD POLYETHYLENE
132 USGAL
DRAIN 1/2"
CV-5685
OPTIONAL WITH EC/EO OPTION
NOTES: ACID DOSING TO OCCUR
A MINIMUM OF 15 SECONDS UPSTREAM
OF COAGULANT DOSING.
ZENON Environmental Inc.
Oakville, Ontario 905-465-3030
REFERENCE ONLY
DO NOT USE FOR
CONSTRUCTION
ZC XXXX
YC XXXX
EXHAUST
S
IAS
1/4" NYLON
AIR TUBING
TYP. AIR ACTUATED VALVE CONTROL DETAIL
HIS 70
YL 70
KQI 70
YS 70
JS 70
ZCP
MX-70
TANK MIXER
1/3 HP, 1750 RPM
xxx V / 1 PH / 60 Hz
TK-70
COAG/OXIDATION TANK
LLDPE CONSTRUCTION
1476 USGAL
ZLC 7060
ZLD 7060
HIS 7060
ZAC 7060
ZAD 7060
ZE 7060
ZSC 7060
ZSD 7060
I.A.S.
FCV-7060
INFLUENT FLOW
CONTROL VALVE
HV-7087
1/2"
6" SCH 80 PVC
SM-7051
LE 7026
LT 7026
HV-7026
1-1/2"
LA 7026
LC 7026
LY 7026
LI 7026
LL 7026
6" SCH 80 PVC
FEED WATER
S18-D-002
TO MEMBRANE TANKS
FEED WATER
FROM SOURCE
68 USGPM MAX @ 4 PSIG MIN
STR-76A
STR-76B
SKID MOUNTED
OPTIONAL -pH ADJUSTMENT
AL 9732
AI 9732
AE 9732
AY 9732
AA 9732
AIT 9732
pH
OPTIONAL W/pH ADJUSTMENT
OPTIONAL EC/EO
HV-7037
1/2"
AE 7037
TURBIDITY
RANGE:
0 TO 1 NTU
DRAIN
AIT 7037
AY 7037
AJ 7037
AL 3237
OPTIONAL TURBIDITY METER
KQI 52
YL 52
HIS 52
YS 52
ZCP
JS 52
1/2" SCH 80 PVC
CV-5285
HV-5280
P-52
SULFURIC ACID PUMP
xx GPH @ xx PSIG
xxx V / 1 PH / 60 Hz
HV-5281
FOOT VALVE
TK-52
SULFURIC ACID DAY STORAGE TANK
LLD POLYETHYLENE
66 USGAL
NOTES: VALVES NOT TAGGED ARE NOT IN
IN ZENON SCOPE OF SUPPLY
ALL DOTTED LINES/EQUIPMENT ARE
BY OTHERS
PIPING SPEC FOR NON-ZENON SUPPLIED
PIPING IS RECOMMENDATION ONLY
THIS DOCUMENT EMBODIES DESIGNS AND INFORMATION IS PROPRIETARY TO GE ZENON ULC
IT IS TO BE USED ONLY FOR THE PURPOSE AND BY THE ENTITY FOR WHICH IT WAS ORIGINALLY SUPPLIED. THE
DOCUMENT MAY NOT BE DUPLICATED, DISCLOSED TO ANY OTHER PERSON OR ENTITY, OR USED FOR MANUFACTURE OF
THE ITEM IN PART OR IN WHOLE WITHOUT THE PRIOR WRITTEN PERMISSION OF GE ZENON ULC
1 06/05/02 REVISED NAMING CONVENTION – MKK –
0 05/10/20 STANDARD – CONTROLLED DOCUMENT – JH –
REV. DATE ZONE DSGN APPD
APPROVAL DATE (Y/M/D)
DRWN: JH 05/10/20
DSGN: JH 05/10/20
CHKD:
APPD:
CADD FILE: B0XS18D001.DWG
SCALE: N/A
GE Water & Process Technologies
ZENON Membrane Solutions
TITLE: PROCESS AND INSTRUMENTATION DIAGRAM
PRE-TREATMENT SYSTEM
SIZE: D
DRAWING NO. S18-D-001
SHEET 1 OF 1
REV. 1

BISULFITE S18-D-006 FROM P-65 — OPTIONAL MANUAL BISULFITE — BISULFITE S18-D-003 TO TK-34C

NaOH S18-D-006 FROM P-66 — OPTIONAL MANUAL NaOH — NaOH S18-D-003 TO TK-34C

CITRIC ACID S18-D-006 FROM P-65 — OPTIONAL MANUAL CITRIC ACID — CITRIC ACID S18-D-003 TO TK-34C

HYPOCHLORITE S18-D-006 FROM P-66 — OPTIONAL MANUAL HYPOCHLORITE — HYPOCHLORITE S18-D-003 TO TK-34C

COMPRESSED AIR AIR S18-D-005 FROM COMPRESSOR — FV-8560 — 1" SCH 80 PVC — COMPRESSED AIR AIR S18-D-003 TO TK-34C

PERMEATE S18-D-004 FROM/TO P-35 — 4" SCH 80 PVC — 3" SCH 80 PVC — PERMEATE S18-D-003 FROM/TO TK-34C

3" SCH 80 PVC

1-1/2" SCH 80 PVC — 1 1/2" — 1" — ZW-1000 V3 MEMBRANE MODULES — 0.5 MM SCREEN

TK-34A MEMBRANE TANK LHDPE CONSTRUCTION 229 USGAL

TK-34B MEMBRANE TANK LHDPE CONSTRUCTION 229 USGAL

3"

ZLC 3460 — ZLD 3460 — HIS 3460

ZAC 3460 — ZAD 3460 — ZE 3460

ZSC 3460 — ZSD 3460 — I/P — I.A.S.

FEED WATER S18-D-001 FROM PRE-TREATMENT — 6" — SKID MOUNTED — TI 3444 — FCV-3460 INFLUENT FLOW CONTROL VALVE — 6" SCH 80 PVC — 4" SCH 80 PVC — 3" SCH 80 PVC — FEED/DRAIN S18-D-003 FROM/TO TK-34C

HV-3426 1 1/2" — LI 3426 — LL 3426 — HH H L LL — LE 3426 — LT 3426 — LC 3426 — LY 3426 — H L — LA 3426 — HH H L LL

FC — FV-3461 — SKID MOUNTED

SCREENINGS/WASTE — TO DRAIN 232 USGPM GRAVITY

ZC XXXX — YC XXXX — EXHAUST — S — IAS — 1/4" NYLON AIR TUBING

TYP. AIR ACTUATED VALVE CONTROL DETAIL

NOTES: VALVES NOT TAGGED ARE NOT IN IN ZENON SCOPE OF SUPPLY

ALL DOTTED LINES/EQUIPMENT ARE BY OTHERS

PIPING SPEC FOR NON-ZENON SUPPLIED PIPING IS RECOMMENDATION ONLY

REV.	DATE		ZONE	DSGN	APPD
2	06/05/02	REVISED NAMING CONVENTION	–	MKK	–
1	06/02/20	REVISED LEVEL TRANSMITTER LOCATION	C10	JH	–
0	05/10/20	STANDARD – CONTROLLED DOCUMENT	–	JH	–

APPROVAL	DATE (Y/M/D)
DRWN: JH	05/10/20
DSGN: JH	05/10/20
CHKD:	
APPD:	
CADD FILE: B0XS180002.dwg	
SCALE: N/A	

GE Water & Process Technologies
ZENON Membrane Solutions

TITLE: PROCESS AND INSTRUMENTATION DIAGRAM MEMBRANE TANKS

SIZE: D — DRAWING NO. S18-D-002 — SHEET 1 OF 1 — REV. 2

THIS DOCUMENT EMBODIES DESIGNS AND INFORMATION IS PROPRIETARY TO GE ZENON ULC
IT IS TO BE USED ONLY FOR THE PURPOSE AND BY THE ENTITY FOR WHICH IT WAS ORIGINALLY SUPPLIED. THE DOCUMENT MAY NOT BE DUPLICATED, DISCLOSED TO ANY OTHER PERSON OR ENTITY, OR USED FOR MANUFACTURE OF THE ITEM IN PART OR IN WHOLE WITHOUT THE PRIOR WRITTEN PERMISSION OF GE ZENON ULC

D(24x36)

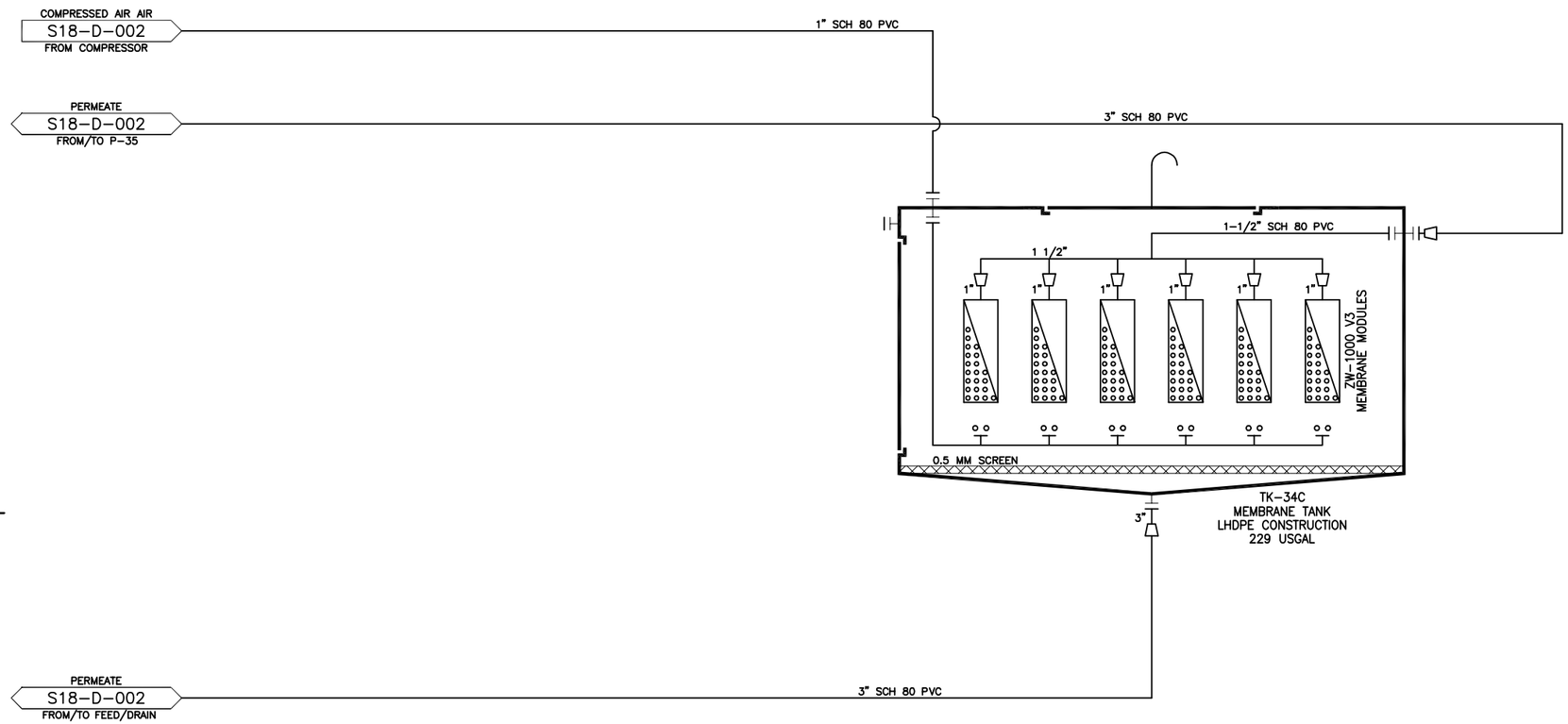

NOTES: VALVES NOT TAGGED ARE NOT IN IN ZENON SCOPE OF SUPPLY

ALL DOTTED LINES/EQUIPMENT ARE BY OTHERS

PIPING SPEC FOR NON–ZENON SUPPLIED PIPING IS RECOMMENDATION ONLY

REV.	DATE		ZONE	DSGN	APPD
1	03/08/99	REVISED NAMING CONVENTION	–	MKK	–
0	05/10/20	STANDARD – CONTROLLED DOCUMENT	–	JH	–

APPROVAL	DATE (Y/M/D)
DRWN: JH	05/10/20
DSGN: JH	05/10/20
CHKD:	
APPD:	
CADD FILE: B0XS18D003.dwg	
SCALE: N/A	

GE Water & Process Technologies
ZENON Membrane Solutions

TITLE: PROCESS AND INSTRUMENTATION DIAGRAM
TREATMENT SYSTEM

SIZE: D | DRAWING NO. S18–D–003 | SHEET 1 OF 1 | REV. 1

THIS DOCUMENT EMBODIES DESIGNS AND INFORMATION IS PROPRIETARY TO GE ZENON ULC
IT IS TO BE USED ONLY FOR THE PURPOSE AND BY THE ENTITY FOR WHICH IT WAS ORIGINALLY SUPPLIED. THE DOCUMENT MAY NOT BE DUPLICATED, DISCLOSED TO ANY OTHER PERSON OR ENTITY, OR USED FOR MANUFACTURE OF THE ITEM IN PART OR IN WHOLE WITHOUT THE PRIOR WRITTEN PERMISSION OF GE ZENON ULC

D(24x36)

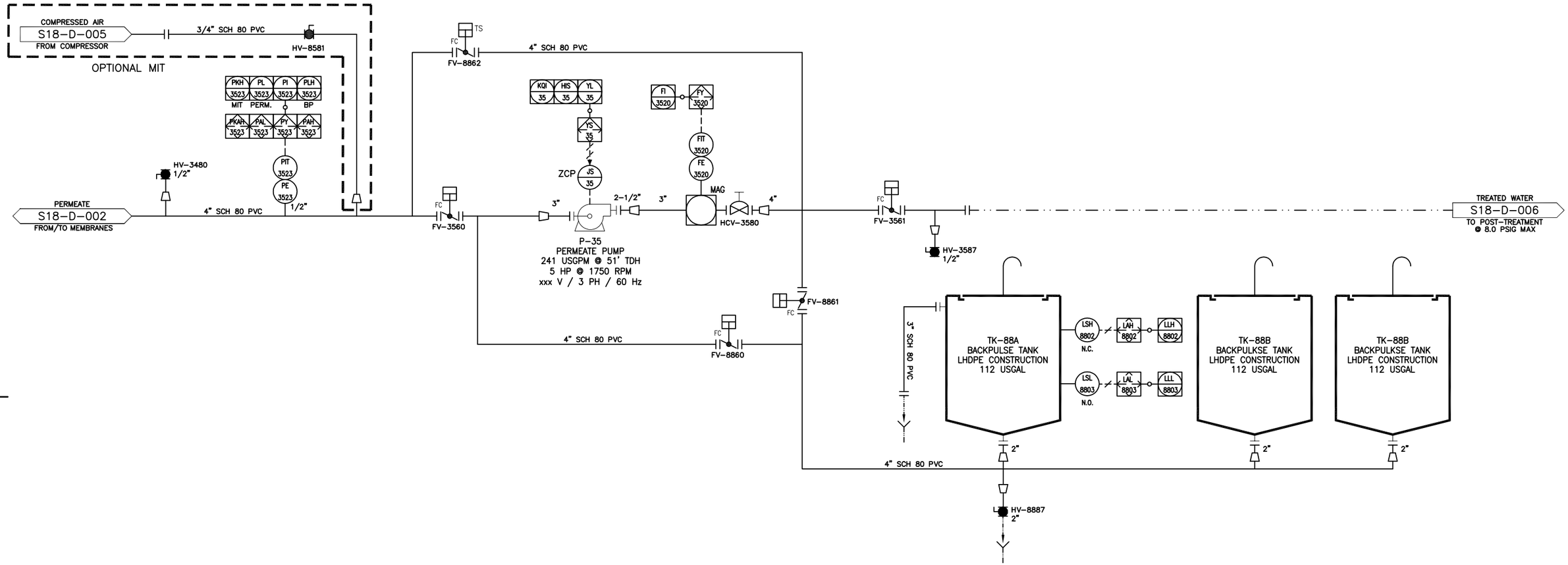

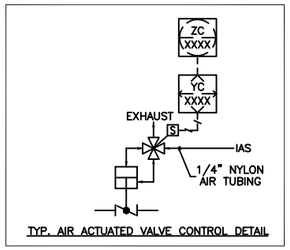

TYP. AIR ACTUATED VALVE CONTROL DETAIL

NOTES: VALVES NOT TAGGED ARE NOT IN IN ZENON SCOPE OF SUPPLY

ALL DOTTED LINES/EQUIPMENT ARE BY OTHERS

PIPING SPEC FOR NON-ZENON SUPPLIED PIPING IS RECOMMENDATION ONLY

REV.	DATE		ZONE	DSGN	APPD
1	06/05/02	REVISED NAMING CONVENTION	–	MKK	–
0	05/10/20	STANDARD – CONTROLLED DOCUMENT	–	JH	–

APPROVAL	DATE (Y/M/D)
DRWN: JH	05/10/20
DSGN: JH	05/10/20
CHKD:	
APPD:	
CADD FILE: BOXS18D004.dwg	
SCALE: N/A	

GE Water & Process Technologies
ZENON Membrane Solutions

TITLE: PROCESS AND INSTRUMENTATION DIAGRAM
PERMEATE/BACKPULSE SYSTEM

SIZE: D | DRAWING NO. S18-D-004 | SHEET 1 OF 1 | REV. 1

THIS DOCUMENT EMBODIES DESIGNS AND INFORMATION IS PROPRIETARY TO GE ZENON ULC
IT IS TO BE USED ONLY FOR THE PURPOSE AND BY THE ENTITY FOR WHICH IT WAS ORIGINALLY SUPPLIED. THE DOCUMENT MAY NOT BE DUPLICATED, DISCLOSED TO ANY OTHER PERSON OR ENTITY, OR USED FOR MANUFACTURE OF THE ITEM IN PART OR IN WHOLE WITHOUT THE PRIOR WRITTEN PERMISSION OF GE ZENON ULC

D(24x36)

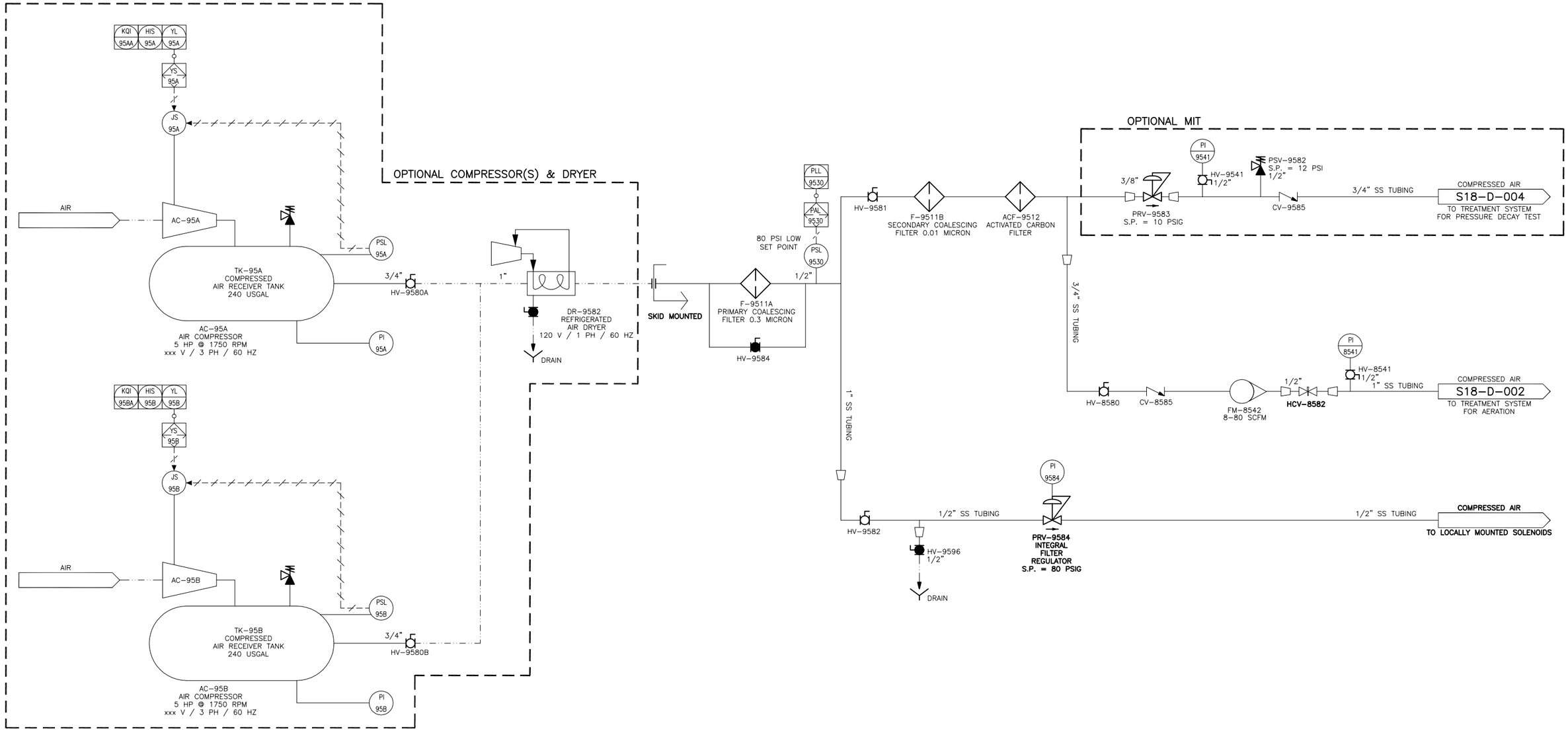

NOTES: VALVES NOT TAGGED ARE NOT IN IN ZENON SCOPE OF SUPPLY

ALL DOTTED LINES/EQUIPMENT ARE BY OTHERS

PIPING SPEC FOR NON-ZENON SUPPLIED PIPING IS RECOMMENDATION ONLY

REV.	DATE		ZONE	DSGN	APPD
1	06/05/02	REVISED NAMING CONVENTION	–	MKK	–
0	05/10/20	STANDARD – CONTROLLED DOCUMENT	–	JH	–

UNLESS OTHERWISE SPECIFIED:	APPROVAL	DATE (Y/M/D)
1. DIMENSIONS ARE IN INCHES 2. TOLERANCES FRACTIONS ± 1/8 " DECIMALS .X ± .030 .XX ± .015 ANGLES ± .5 DEG HOLE SIZES ± 1/32 " HOLE CENTRES ± 1/32 "	DRWN: JH	05/10/20
	DSGN: JH	05/10/20
	CHKD:	
	APPD:	
	CADD FILE: BOXS18D0005.dwg	
DRAWING INTERPRETATION: ANSI Y14.5 M	SCALE: N/A	

GE Water & Process Technologies
ZENON Membrane Solutions

TITLE: PROCESS AND INSTRUMENTATION DIAGRAM
AIR COMPRESSOR & ASSOC. EQUIPMENT

SIZE: D | DRAWING NO. S18-D-005 | SHEET 1 OF 1 | REV. 1

THIS DOCUMENT EMBODIES DESIGNS AND INFORMATION IS PROPRIETARY TO GE ZENON ULC
IT IS TO BE USED ONLY FOR THE PURPOSE AND BY THE ENTITY FOR WHICH IT WAS ORIGINALLY SUPPLIED. THE DOCUMENT MAY NOT BE DUPLICATED, DISCLOSED TO ANY OTHER PERSON OR ENTITY, OR USED FOR MANUFACTURE OF THE ITEM IN PART OR IN WHOLE WITHOUT THE PRIOR WRITTEN PERMISSION OF GE ZENON ULC

D(24x36)

APPROVED FOR CONSTRUCTION

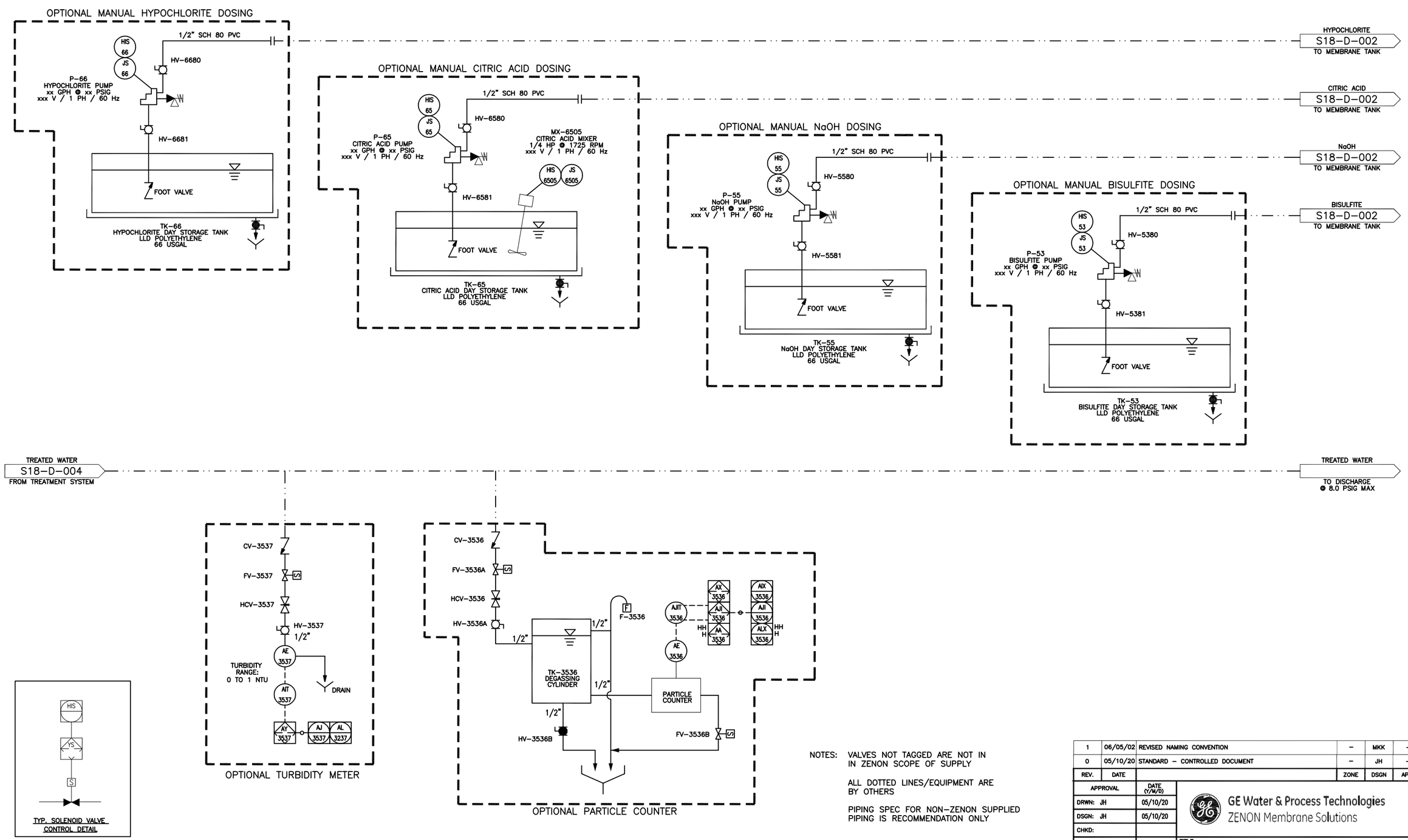

NOTES: VALVES NOT TAGGED ARE NOT IN IN ZENON SCOPE OF SUPPLY

ALL DOTTED LINES/EQUIPMENT ARE BY OTHERS

PIPING SPEC FOR NON-ZENON SUPPLIED PIPING IS RECOMMENDATION ONLY

REV.	DATE		ZONE	DSGN	APPD
1	06/05/02	REVISED NAMING CONVENTION	–	MKK	–
0	05/10/20	STANDARD – CONTROLLED DOCUMENT	–	JH	–

APPROVAL	DATE (Y/M/D)
DRWN: JH	05/10/20
DSGN: JH	05/10/20
CHKD:	
APPD:	
CADD FILE: B0XS18D0006.dwg	
SCALE: N/A	

GE Water & Process Technologies
ZENON Membrane Solutions

TITLE: PROCESS AND INSTRUMENTATION DIAGRAM POST-TREATMENT & CLEANING

SIZE: D | DRAWING NO. S18-D-006 | SHEET 1 OF 1 | REV. 1

THIS DOCUMENT EMBODIES DESIGNS AND INFORMATION IS PROPRIETARY TO GE ZENON ULC
IF IS TO BE USED ONLY FOR THE PURPOSE AND BY THE ENTITY FOR WHICH IT WAS ORIGINALLY SUPPLIED. THE DOCUMENT MAY NOT BE DUPLICATED, DISCLOSED TO ANY OTHER PERSON OR ENTITY, OR USED FOR MANUFACTURE OF THE ITEM IN PART OR IN WHOLE WITHOUT THE PRIOR WRITTEN PERMISSION OF GE ZENON ULC

D(34x36)

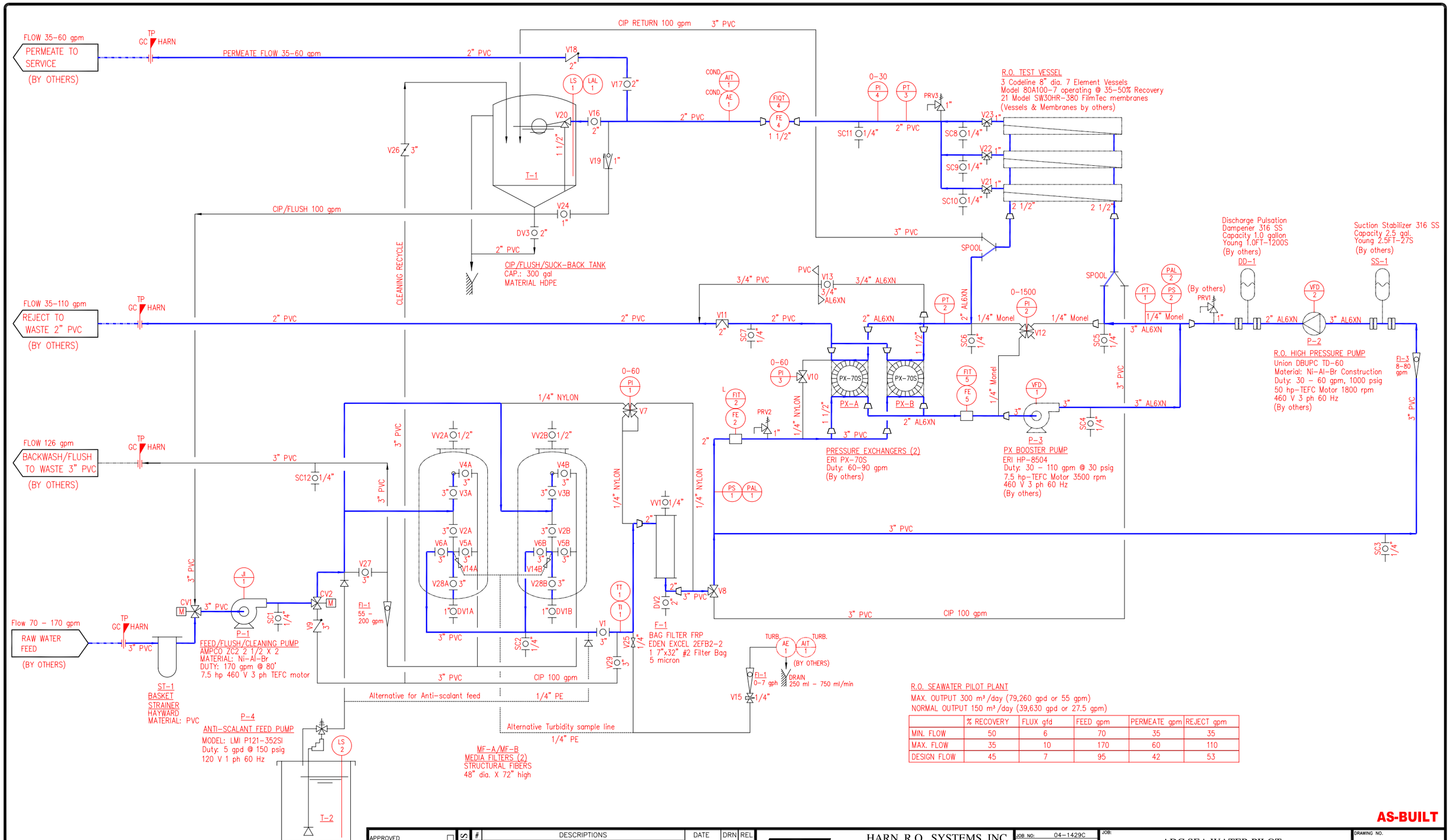

R.O. SEAWATER PILOT PLANT

MAX. OUTPUT 300 m³/day (79,260 gpd or 55 gpm)

NORMAL OUTPUT 150 m³/day (39,630 gpd or 27.5 gpm)

	% RECOVERY	FLUX gfd	FEED gpm	PERMEATE gpm	REJECT gpm
MIN. FLOW	50	6	70	35	35
MAX. FLOW	35	10	170	60	110
DESIGN FLOW	45	7	95	42	53

APPROVED ☐
APPROVED AS NOTED ☐
REJECTED ☐
BY:
DATE:

REVISIONS

#	DESCRIPTIONS	DATE	DRN	REL
0	AS-BUILT	2-3-05	PED	
1	CLEANING RECYCLE & BY-PASS ADDED	6-28-06	PED	
2	PRINTED	05-23-07	DFS	

HARN R.O. SYSTEMS INC.
205 SEABOARD AVE.
VENICE, FL 34292
(941)488-9671

JOB NO: 04-1429C
DATE: 9-23-04
DESIGN BY: PED
DRAWN BY: PED
SCALE: NTS
CHECKED BY:
APPROVED BY:

JOB: ADC SEA WATER PILOT

DRAWING TITLE: P & I DIAGRAM

DRAWING NO. 1429CI1001

PAGE(S): 1 OF 2

FILE NO. 1429CI1001.dwg

Appendix D

PORT HUENEME WATER QUALITY DATA

ENVIRONMENTAL

TO: JOHN MACHARG
FROM: TED KUEPPER

ANALYTICAL CHEMISTS

May 11, 2004

Lab ID : SP 403656-0
Customer ID: 2-18477

U.S. Navy - NFESC
Attn: Bill Varnava, Code ESC 32
1100 23rd Avenue
Port Hueneme, CA 93042

Sampled On : April 14, 2004-16:10
Sampled By :
Received On: April 15, 2004-11:15
Matrix : Surface Water

Description : Raw Seawater
Project : EUWP KOCU

Sample Results - Inorganic

Constituent	Results	PQL	Units	MCL	Sample Preparation Method	Sample Preparation Date/ID	Sample Analysis Method	Sample Analysis Date/ID
General Mineral P:1,5,4								
Total Hardness	6660	2.5*	mg/L		Calculation		Calculation	
Calcium	360	1	mg/L		200.7	04/15/04:D203	200.7	04/15/2004:A07
Magnesium	1400	100*	mg/L		200.7	04/15/04:D203	200.7	04/16/2004:A01
Potassium	396	1	mg/L		200.7	04/15/04:D203	200.7	04/15/2004:A07
Sodium	11100	100*	mg/L		200.7	04/15/04:D203	200.7	04/16/2004:A01
Total Cations	626	--*	meq/L		Calculation		Calculation	
Boron	3.9	0.1	mg/L		200.7	04/15/04:D203	200.7	04/15/2004:A07
Copper	ND	10	ug/L	1000[2]	200.7	04/15/04:D203	200.7	04/15/2004:A07
Iron	70	50	ug/L	300[2]	200.7	04/15/04:D203	200.7	04/15/2004:A07
Manganese	ND	10	ug/L	50[2]	200.7	04/15/04:D203	200.7	04/15/2004:A07
Zinc	ND	20	ug/L	5000[2]	200.7	04/15/04:D203	200.7	04/15/2004:A07
Total Alkalinity (as CaCO3)	120	10	mg/L		2320B	04/16/04:B202	2320B	04/16/2004:A02
Hydroxide	ND	10	mg/L		2320B	04/16/04:B202	2320B	04/16/2004:A02
Carbonate	ND	10	mg/L		2320B	04/16/04:B202	2320B	04/16/2004:A02
Bicarbonate	140	10	mg/L		2320B	04/16/04:B202	2320B	04/16/2004:A02
Sulfate	2400	100*	mg/L	500[2]	300.0	04/15/04:B215	300.0	04/16/2004:A19
Chloride	18600	200*	mg/L	500[2]	300.0	04/16/04:A215	300.0	04/16/2004:A02
Nitrate	1.6	0.4	mg/L	45	4500NO3F	04/16/04:A220 09:50	4500NO3F	04/16/2004:B02 15:02
Nitrite as N	ND	0.1	mg/L	1	4500NO2B	04/15/04:B251 13:00	4500NO2B	04/15/2004:D01 09:10
Fluoride	ND	10*	mg/L	2	300.0	04/15/04:B215	300.0	04/16/2004:A19
Total Anions	577	--	meq/L		Calculation		Calculation	
pH	8.0	--	units		4500-H B	04/15/04:B246	4500-H B	04/15/2004:B01 16:36
Specific Conductance	51000	1	umhos/cm	1600[2]	2510B	04/16/04:B212	2510B	04/16/2004:B01
Total Dissolved Solids	34900	510*	mg/L	1000[2]	2540C	04/17/04:A235	2540 C,E	04/19/2004:A00
MBAS (foaming agents)	ND	0.1	mg/L	0.5[2]	5540C	04/15/04:A218 13:30	5540C	04/15/2004:A01 13:39
Aggressiveness Index	13.0	1.0	mg/L		Calculation		Calculation	
Langlier Index	0.9	1.0*	mg/L		Calculation		Calculation	

ND = Non-Detect. PQL = Practical Quantitation Limit. * PQL adjusted for dilutions, concentrations, dry weight reporting, or limited sample.
MCL = Maximum Contaminat Level. [2] - Secondary Standard.
Containers: (P) Plastic Preservatives: (1) Cool 4°C, (5) HNO3 pH < 2, (4) H2SO4 pH < 2

Corporate Offices & Laboratory
P.O. Box 272 / 853 Corporation Street
Santa Paula, CA 93061-0272
TEL: (805) 392-2000
FAX: (805) 525-4172
CA NELAP Certification No. 01110CA
CA ELAP Certification No. 1573

Office & Laboratory
2500 Stagecoach Road
Stockton, CA 95215
TEL: (209) 942-0181
FAX: (209) 942-0423
CA ELAP Certification No. 1563

Field Office
Visalia, California
TEL: (559) 734-9473
FAX: (559) 734-8436
Mobile: (559) 737-2399

Appendix E

UF CLEANING

PN: 7902783

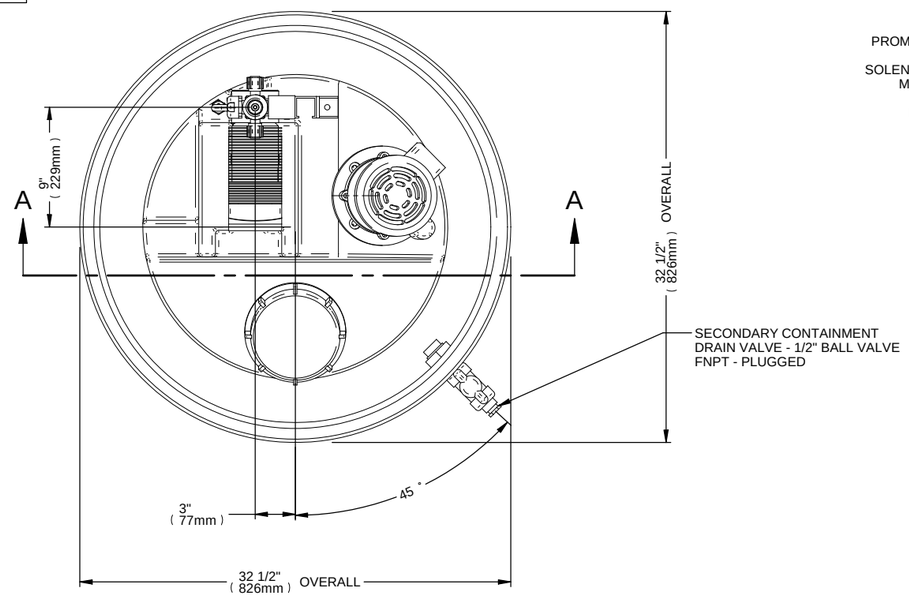

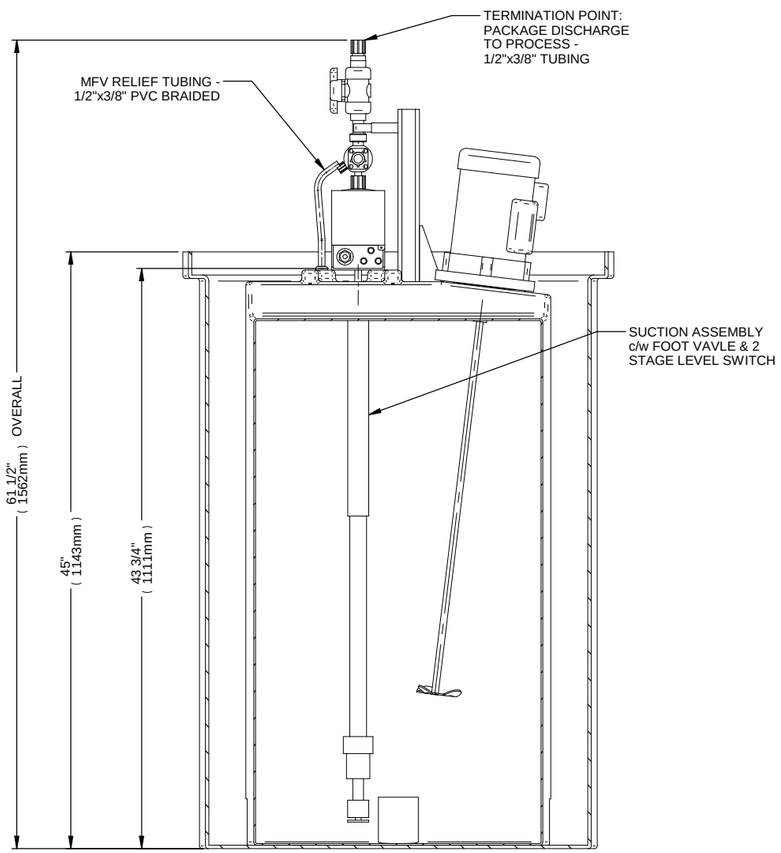

SECTION A-A

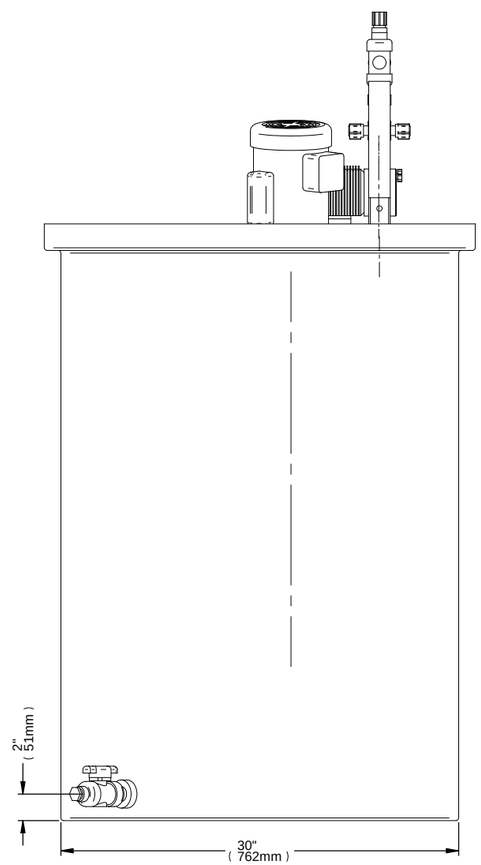

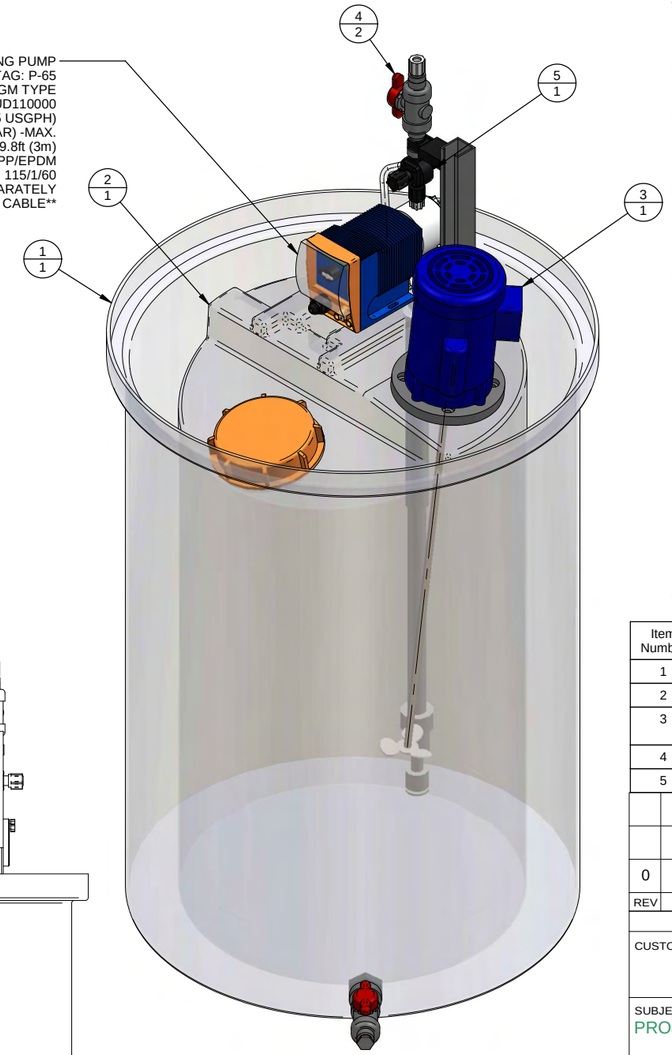

SHIP LOOSE MATERIALS

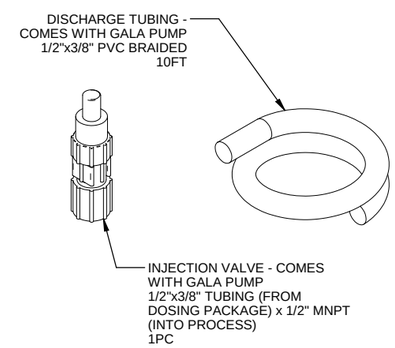

NOTES:

1. ALL PIPING CONNECTIONS ARE 1/2" SCHEDULE 80 PVC SOCKETWELD UNLESS OTHERWISE REQUIRED BY PIPELINE DEVICES. TUBING FROM THE MFV FOR PRESSURE RELIEF IS 1/2"x3/8" PVC BRAIDED. TUBING FROM PUMP BLEED VALVE IS 1/4"x3/16" CLEAR PVC (IF REQUIRED).

2. SEAL MATERIAL IS PTFE AND EPDM UNLESS OTHERWISE SPECIFIED BY PIPELINE DEVICES.

3. PIPE SUPPORT IS MADE FROM FRP.

4. PRIMARY TANK IS MADE FROM LLDPE. SECONDARY CONTAINMENT TANK IS MADE FROM LLDPE, 1.5 SG.

5. ALL INTERCONNECTING PIPE & FITTINGS, HARDWARE, GASKETS, SEALS AND WIRING IS BY OTHERS.

6. TOLERANCE ON ALL TERMINATION POINTS IS +/- 3/8" (10mm) UNLESS SPECIFIED BY CUSTOMER.

7. APPROX. SHIPPING WIEGHT: 57Kg (125 Lb)

8. DESIGN NOTES:

DOWNSTREAM INJECTION PUMP-DISCHARGE:
- FLUIDS HANDLED: CITRIC ACID [(CH2)3COOH]
- DESIGN PRESSURE: 689KPAG (100 PSIG)
- DESIGN TEMPERATURE : MAX:35DEG C,MIN: 0DEG C
- TEST PRESSURE: 1034 KPAG (150 PSIG).

TESTING CONDITION:
- TEST TYPE: HYDROSTATIC
- TEST MEDIUM: WATER
- TEST TEMPERATURE: AMBIENT (20 DEG. C)
- TEST DURATION: 10 MIN. MINIMUM.

CORROSION ALLOWANCE : 0.0"(0.0 mm).

MAJOR COMPONENTS CHART

1/2 TOP SIDE = CHART NUMBER
BOTTOM SIDE = QUANTITY NUMBER

Item Number	Document Number	Title	Quantity
1	7902787	100 IMP.GALLON OPEN TOP TANK-LLDPE	1
2	1023175	TANK 66 GAL-250L-PE-HEILER	1
3	7818565	HIGH SPEED MIXER, 1/4 HP, PVC MOUNTING FLANGE, 316SS SHAFT & PROPELLER	1
4	7901183	BALL VALVE 1/2" PVC/EPDM-TYPE 21	2
5	740427	Multi-Function Valve, 1.5/6 Bar, Gr-II-	1

REV	DATE	DESCRIPTION	BY	APPD	REVD
0	20/12/06	INITIAL RELEASE	AS	AG	

REVISIONS

CUSTOMER
ZENON

SUBJECT
PROJECT: Z-BOX PACKAGES

JOB No --
PURCHASE ORDER No --
PURCHASER'S EQUIP. No P-65

TITLE
CLEANING PUMP - (CH2)3COOH DOSING PACKAGE - GENERAL ARRANGEMENT

THIS DRAWING IS THE PROPERTY OF PROMINENT FLUID CONTROLS LTD. AND SHALL NOT BE COPIED OR TRANSFERRED WITHOUT THE WRITTEN CONSENT OF PROMINENT FLUID CONTROLS LTD.

ENGINEERS SEAL

ProMinent®
THE PROMINENT GROUP OF COMPANIES

GUELPH - ONTARIO - CANADA

PROMINENT FLUID CONTROLS LTD.
490 SOUTHGATE DRIVE.
GUELPH, ONTARIO, CANADA
N1H 6J3
TEL. 519 836 5692 FAX. 519 836 5226

PROMINENT FLUID CONTROLS LTD.
RIDC PARK WEST
136 INDUSTRY DRIVE,
PITTSBURGH P.A., USA. 15275
TEL. 412 787 2484 FAX. 412 787 0704

DESIGNED	AG	APPROVED	
DRAWN	AG	SCALE	NTS
CHECKED		DATE	20/12/2006

Scale based on: SHEET SIZE D

DWG No Z-BOX-P65-200

REV 0

PN: 7902780

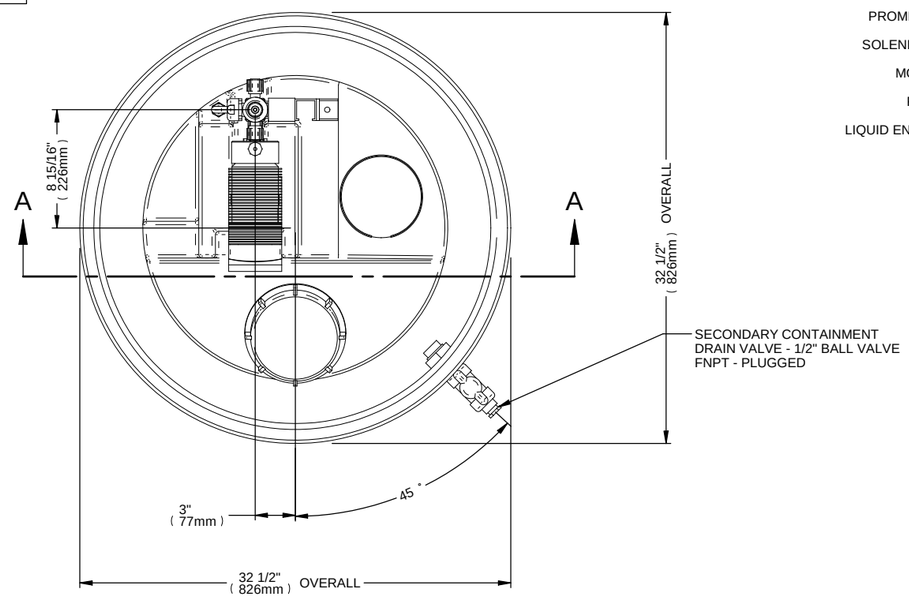

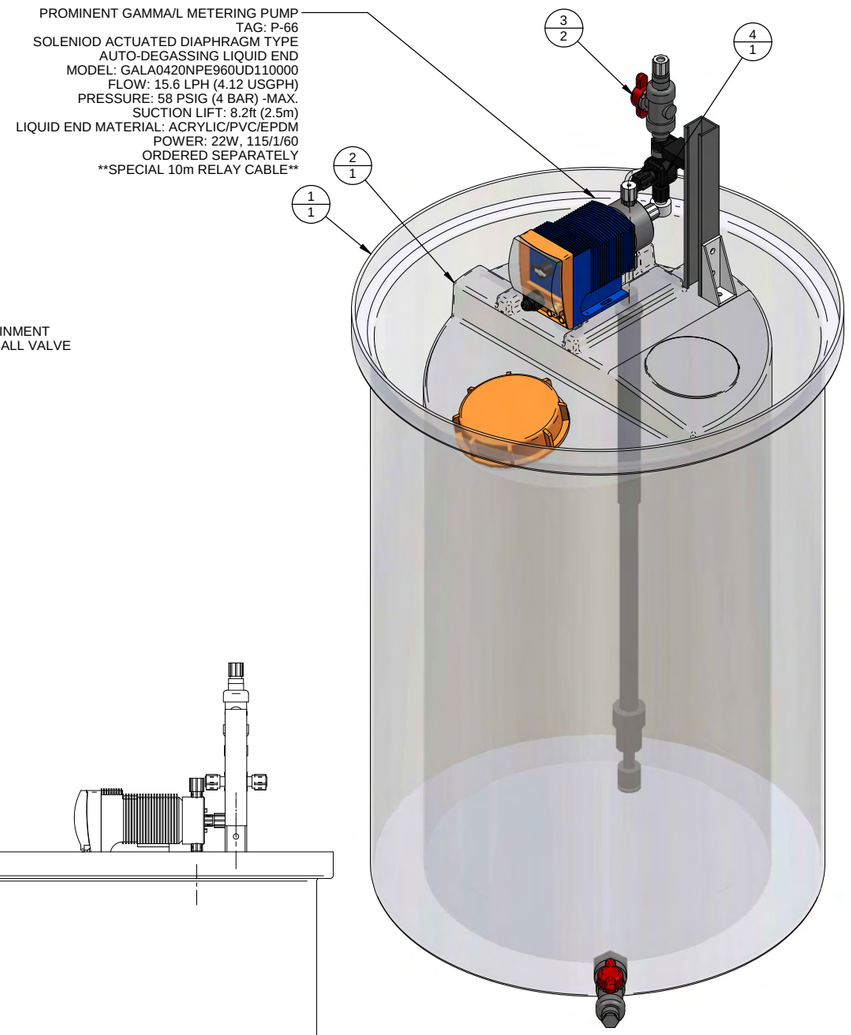

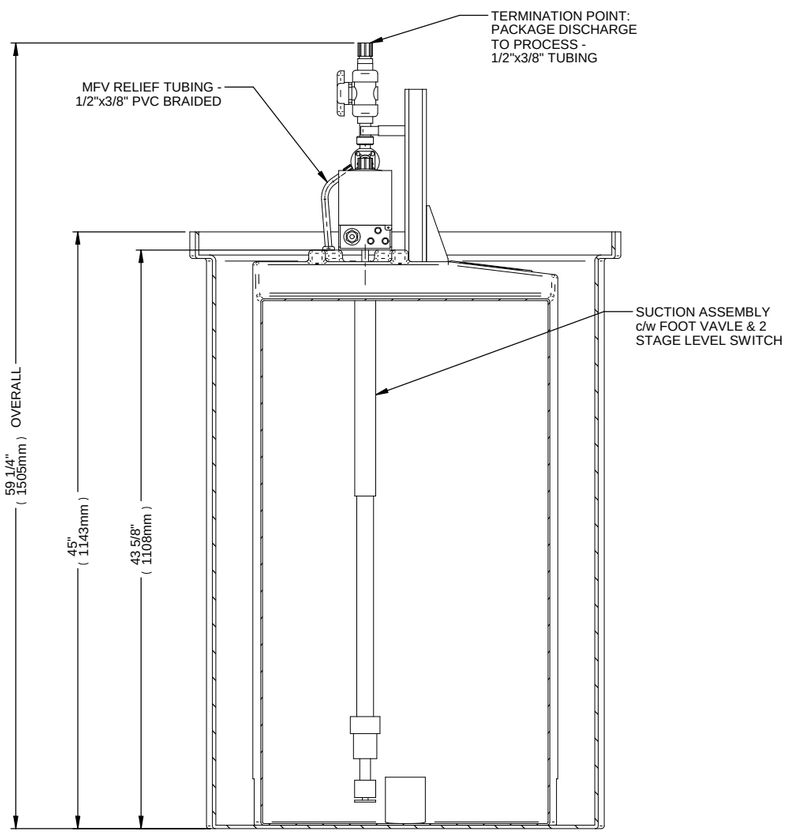

SECTION A-A

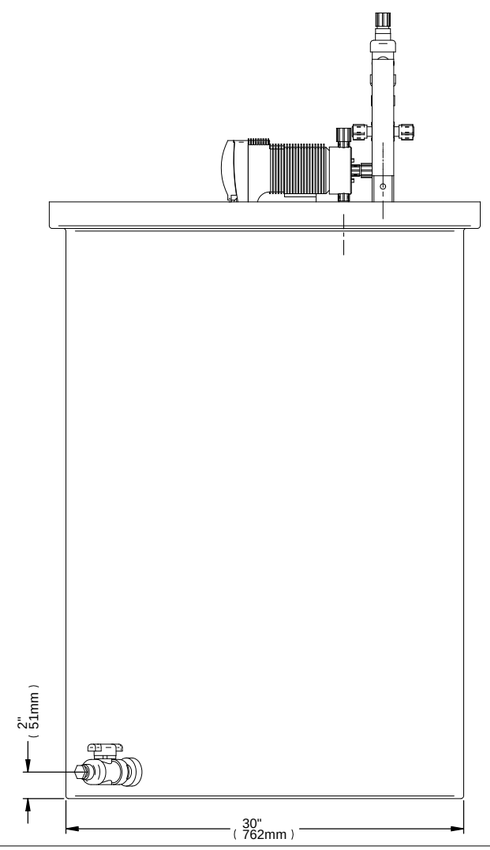

SHIP LOOSE MATERIALS

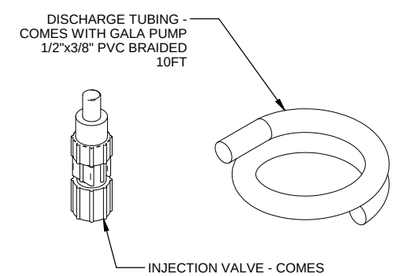

NOTES:

1. ALL PIPING CONNECTIONS ARE 1/2" SCHEDULE 80 PVC SOCKETWELD UNLESS OTHERWISE REQUIRED BY PIPELINE DEVICES. TUBING FROM THE MFV FOR PRESSURE RELIEF IS 1/2"x3/8" PVC BRAIDED. TUBING FROM PUMP BLEED VALVE IS 1/4"x3/16" CLEAR PVC (IF REQUIRED).

2. SEAL MATERIAL IS PTFE AND EPDM UNLESS OTHERWISE SPECIFIED BY PIPELINE DEVICES.

3. PIPE SUPPORT IS MADE FROM FRP.

4. PRIMARY TANK IS MADE FROM LLDPE. SECONDARY CONTAINMENT TANK IS MADE FROM LLDPE, 1.5 SG.

5. ALL INTERCONNECTING PIPE & FITTINGS, HARDWARE, GASKETS, SEALS AND WIRING IS BY OTHERS.

6. TOLERANCE ON ALL TERMINATION POINTS IS +/- 3/8" (10mm) UNLESS SPECIFIED BY CUSTOMER.

7. APPROX. SHIPPING WIEGHT: 50Kg (110 Lb)

8. DESIGN NOTES:

DOWNSTREAM INJECTION PUMP-DISCHARGE:
- FLUIDS HANDLED: SODIUM HYPOCHLORITE (NaOCl)
- DESIGN PRESSURE: 689KPAG (100 PSIG)
- DESIGN TEMPERATURE : MAX:35DEG C,MIN: 0DEG C
- TEST PRESSURE: 1034 KPAG (150 PSIG).

TESTING CONDITION:
- TEST TYPE: HYDROSTATIC
- TEST MEDIUM: WATER
- TEST TEMPERATURE: AMBIENT (20 DEG. C)
- TEST DURATION: 10 MIN. MINIMUM.

CORROSION ALLOWANCE : 0.0"(0.0 mm).

MAJOR COMPONENTS CHART

1/2 TOP SIDE = CHART NUMBER
BOTTOM SIDE = QUANTITY NUMBER

Item Number	Document Number	Title	Quantity
1	7902787	100 IMP.GALLON OPEN TOP TANK-LLDPE	1
2	1023175	TANK 66 GAL-250L-PE-HEILER	1
3	7901183	BALL VALVE 1/2" PVC/EPDM-TYPE 21	2
4	740427	Multi-Function Valve, 1.5/6 Bar, Gr-II-	1

REV	DATE	DESCRIPTION	BY	APPD	REVD
0	08/01/07	INITIAL RELEASE	AS	AG	

REVISIONS

CUSTOMER
ZENON

SUBJECT
PROJECT: Z-BOX PACKAGES

JOB No --
PURCHASE ORDER No --
PURCHASER'S EQUIP. No P-66

TITLE CLEANING PUMP-NaOCl DOSING PACKAGE - GENERAL ARRANGEMENT -

THIS DRAWING IS THE PROPERTY OF PROMINENT FLUID CONTROLS LTD. AND SHALL NOT BE COPIED OR TRANSFERRED WITHOUT THE WRITTEN CONSENT OF PROMINENT FLUID CONTROLS LTD.

ENGINEERS SEAL

pfc ProMinent

ProMinent®
THE PROMINENT GROUP OF COMPANIES

GUELPH - ONTARIO - CANADA

PROMINENT FLUID CONTROLS LTD.
490 SOUTHGATE DRIVE.
GUELPH, ONTARIO, CANADA
N1H 6J3
TEL. 519 836 5692 FAX. 519 836 5226

PROMINENT FLUID CONTROLS LTD.
RIDC PARK WEST
136 INDUSTRY DRIVE,
PITTSBURGH P.A., USA. 15275
TEL. 412 787 2484 FAX. 412 787 0704

DESIGNED	AG	APPROVED	
DRAWN	AS	SCALE	NTS
CHECKED		DATE	08/01/2007

Scale based on: SHEET SIZE D

DWG No Z-BOX-P66-200

REV 0

Appendix F

UF EQUIPMENT DRAWINGS AND CATALOG SHEET

ITEM NO.	DESCRIPTION	P & ID REF.
1	Z-BOX PROCESS TANKS	BOXS18-D-002,3
2	Z-BOX BACKPULSE TANKS	BOXS18-D-002,3
3	COMPRESSED AIR SYSTEM	BOXS18-D-005
4	HMI	NA
5	ELECTRICAL PANEL	NA
6	EQUIPMENT SKID	BOXS18-D-002,3

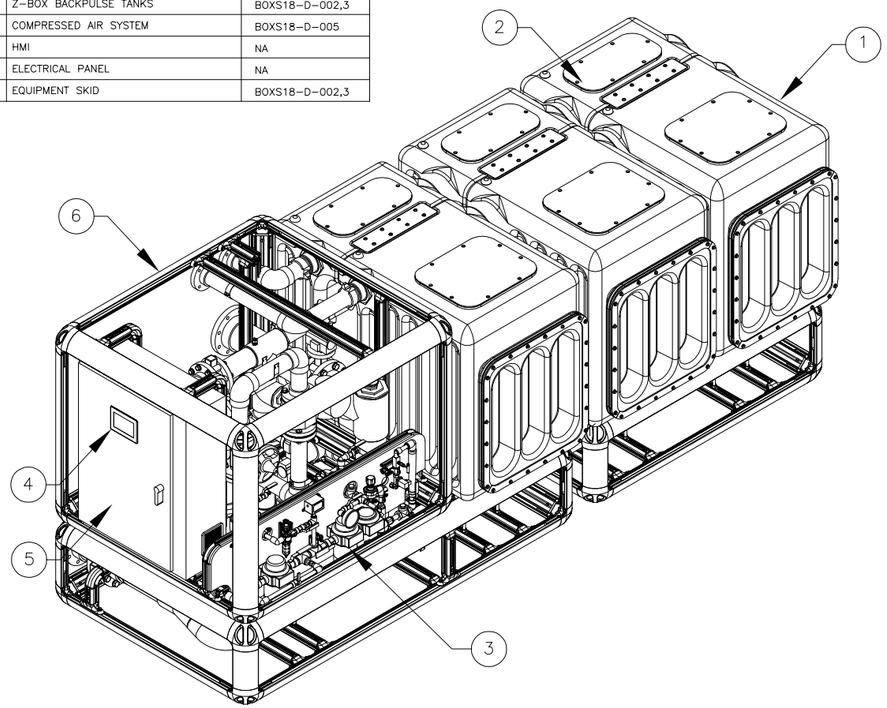

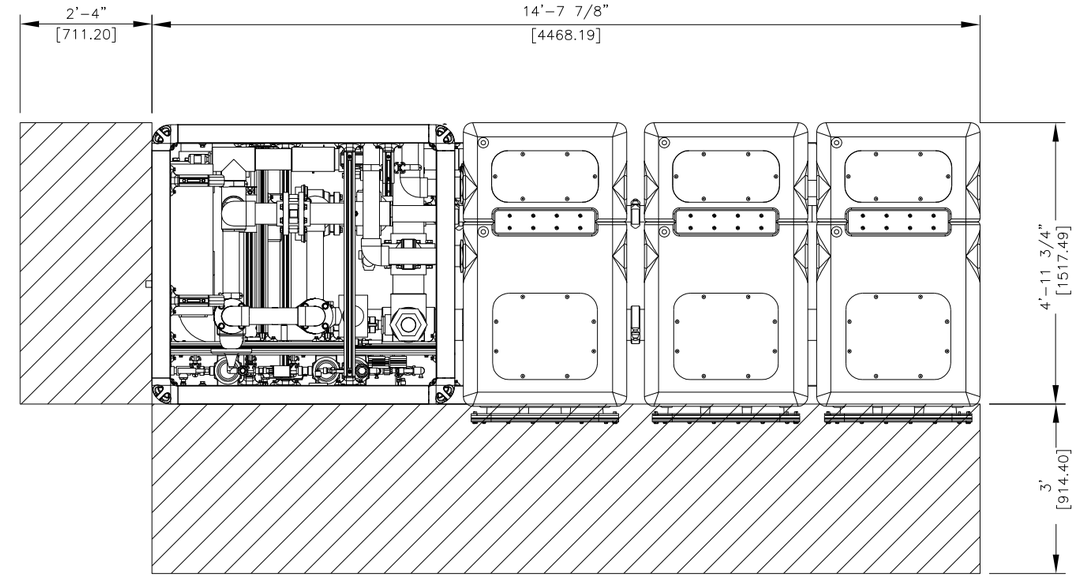

PLAN

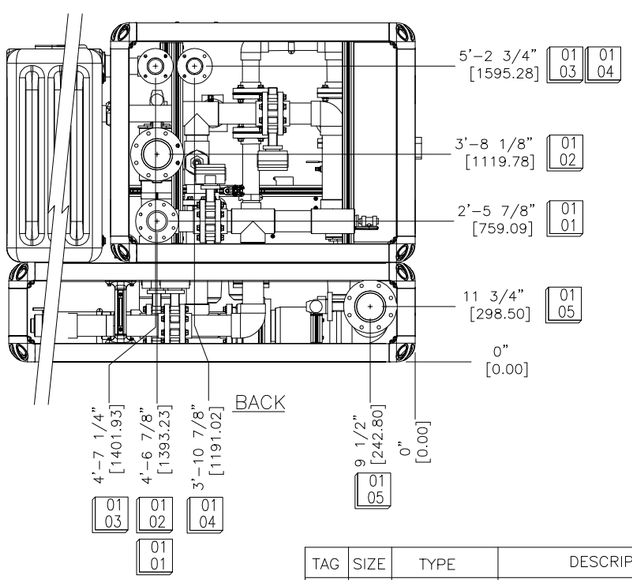

BACK

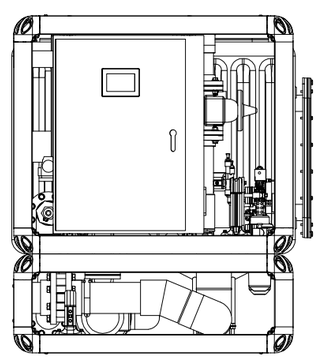

LEFT

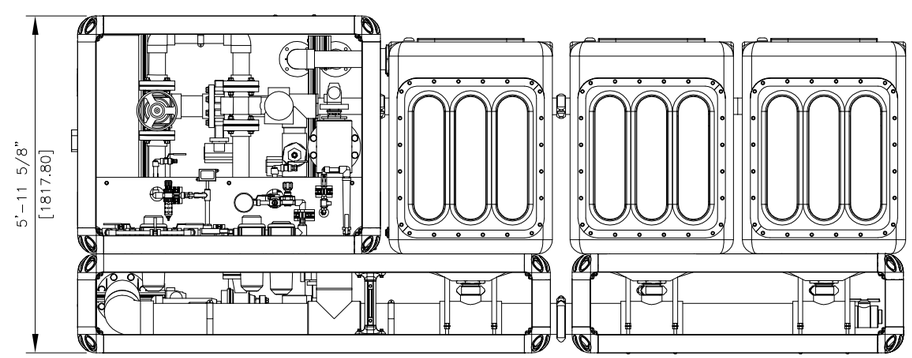

FRONT

TAG	SIZE	TYPE	DESCRIPTION
0101	4"	150# FLANGE	TREATED WATER DISCHARGE
0102	6"	150# FLANGE	RAW WATER INFLUENT
0103	3"	150# FLANGE	BACKPULSE TANK OVERFLOW TO DRAIN
0104	3"	150# FLANGE	PROCESS TANK OVERFLOW TO DRAIN
0105	6"	150# FLANGE	WASTE & SCREENINGS TO DRAIN

THIS DOCUMENT EMBODIES DESIGNS AND INFORMATION IS PROPRIETARY TO ZENON ENVIRONMENTAL SYSTEMS INC. IT IS TO BE USED ONLY FOR THE PURPOSE AND BY THE ENTITY FOR WHICH IT WAS ORIGINALLY SUPPLIED. THE DOCUMENT MAY NOT BE DUPLICATED, DISCLOSED TO ANY OTHER PERSON OR ENTITY, OR USED FOR MANUFACTURE OF THE ITEM IN PART OR IN WHOLE WITHOUT THE PRIOR WRITTEN PERMISSION OF ZENON ENVIRONMENTAL SYSTEMS INC.

REV.	DATE		ZONE	DSGN	APPD
0	06/07/20	STANDARD – CONTROLLED DOCUMENT		NK	–

UNLESS OTHERWISE SPECIFIED:

1. DIMENSIONS ARE IN INCHES
2. TOLERANCES
   - FRACTIONS ± 1/8 "
   - DECIMALS .X ± .030, .XX ± .015
   - ANGLES ± .5 DEG
   - HOLE SIZES ± 1/32 "
   - HOLE CENTRES ± 1/32 "

APPROVAL		DATE (Y/M/D)
DRWN:	MKK	06/07/20
DSGN:	MKK	06/07/20
CHKD:		
APPD:		
CADD FILE:	2005002-G-001	

GE Water & Process Technologies
ZENON Membrane Solutions

CUSTOMER: Z-BOX S18

TITLE: GENERAL ARRANGEMENT Z-BOX S18

DRAWING INTERPRETATION: ANSI Y14.5 M

SCALE: NTS

SIZE: D

DRAWING NO. 2005002-G-001

SHEET 1 OF 1

REV. 0

D(24x36)

GE
Water & Process Technologies

Catalog Sheet

Z-BOX* S Packaged Plants

Pre-engineered Packaged Plants are cost effective, compact solutions for potable water treatment

Benefits

- ZeeWeed* 1000 ultrafiltration membrane effectively blocks particles, bacteria, viruses and cysts from water supplies
- Simple and efficient design and operation
- PLC-control provides cost-effective operation and maintenance
- Easily fits into new or existing buildings
- Low ceiling height requirement
- Pretreatment for RO membranes (seawater compatible)
- Surface water, ground water and tertiary treatment
- Expandable modular design

Application Dependent Options

- Enhanced coagulation (E.C.), or oxidation system with +/-pH adjustment
- NaOCl and Citric Acid cleaning systems, and neutralization pumps
- Air Compressor
- Treated and feedwater turbidimeter and particle counters
- Membrane Integrity Test (MIT)
- Allen Bradley PLC
- Disinfection
- Shelf spares
- ZenoTrac* process tracking system

Base System
Permeate/backpulse pump and associated valves; polyethylene membrane and backpulse tanks; and control panel with GE Fanuc PLC and HMI interface mounted on an aluminum equipment frame

Model	Length	Max. Flow MGD (m^3/d)
Z-BOX S6	7'3" (2.2m)	0.102 (386)
Z-BOX S12	10'11" (3.3m)	0.204 (772)
Z-BOX S18	12'11" (3.9m)	0.306 (1,158)
Z-BOX S24	15'10" (4.8m)	0.408 (1,544)

Voltage 400/480/575 V, 3 phase, 50/60Hz

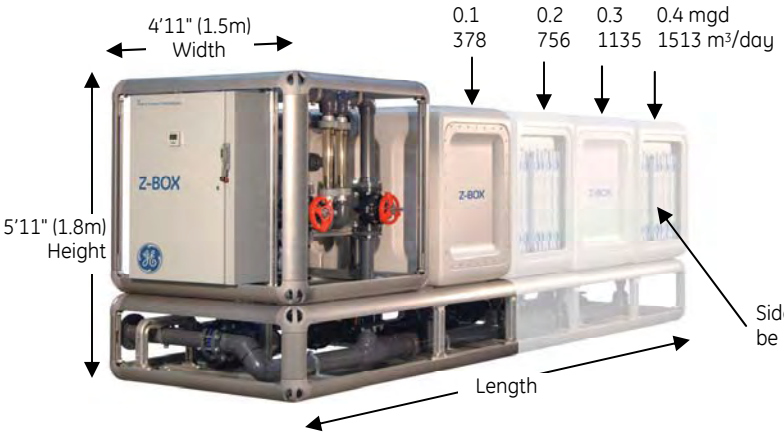

ZENON Membrane Solutions
Oakville, Ontario, Canada
+1-905-465-3030
www.gewater.com

Global Headquarters
Trevose, PA
+1-215-355-3300

Europe/Middle East/Africa
Tatabanya, Hungary
+36-34-512-520

Asia/Pacific
Singapore
+65-6268-4366

© 2006, General Electric Company. All rights reserved.
*Trademark of General Electric Company; may be registered in one or more countries.

CAT-ZBOXS-EN 1206 NA/EMEA

13.0 Data

TIME				CALCULATED PARAMETERS			TEMP	PRESSURES										FLOWS				MAIN PANEL KW METER				VFD KW METER			
		Operation	System	RO	Flux	Power		P_{MF-in}	P_{MF-out}	P_{CF-in}	P_{CF-out}	$P_{PX-Feed\ In}$	$P_{PX-conc\ out}$	$P_{PX-boost\ suct}$	P_{F-SYS}	P_{C-SYS}	P_{P-SYS}	$Q_{F-HP\ Pump}$	$Q_{PX\ Pump}$	$Q_{Feed\ PX-In}$	Q_{P-SYS}	A_{sys}	P HP/PX	P booster	Power	PX power	HP Power	Feed Pump	
Date	Time	Time	Recovery %	Recovery %	Gfd	kWh/m3	Influent	(psi)	(psi)	(psi)	(psi)	(psi)	(psi)	(psi)	(psi)	(psi)	(psi)	(gpm)	(gpm)	(gpm)	(gpm)	amp	(kw)	(kw)	Factor	(kw)	(kw)	(kw)	Notes
MM/DD/YY	hh:mm	hh.hh					Temp F	1	2	3	4	5	6	7	8	9	10	11	12	13	14	15	16	17	18	19	20	21	
PX Unbalanced High Recovery Test - Hydranautics SWC5 Membranes											**Membrane Ripening Period**																		
01/30/09	10:04	9895.34	41.7%	43.2%	7.53	1.75	59.0	36.7	35.8	34.9	30.8	29.8	21.4	750	769	760	2.5	45.0	57.64	61.29	43.9	23.77	17.46	nd	0.878	0.95	15.7	3.95	bl
02/02/09	9:30	9966.77	42.7%	43.2%	7.53	1.77	58.0	37.1	36.3	35.5	30.9	29.9	22.1	755	775	761	2.6	46.0	57.72	58.86	43.9	23.83	17.67	nd	0.876	1.12	15.7	3.91	bl
02/03/09	10:25	9991.7	42.6%	43.2%	7.53	1.77	59.0	37.1	36.2	35.3	30.9	29.7	22.1	750	770	760	2.5	46.0	57.75	59.13	43.9	23.77	17.64	nd	0.877	1.08	15.7	3.89	bl
02/04/09	10:15	10015.51	45.0%	45.9%	7.51	1.79	58.0	37.1	36.3	35.8	31.0	29.9	23.0	777	795	785	2.7	46.0	51.65	53.48	43.8	24.42	17.84	nd	0.879	0.75	16.3	3.72	bl
02/05/09	10:20	10039.61	45.3%	45.6%	7.53	1.80	58.0	37.3	36.9	36.0	31.1	29.9	23.6	776	796	783	3.0	46.0	52.41	53.03	43.9	24.31	17.94	nd	0.883	0.88	16.3	3.85	bl
02/06/09	9:41	10062.97	45.1%	45.8%	7.53	1.79	58.0	38.1	37.3	36.7	31.2	30.1	23.8	770	785	779	3.1	46.0	52.04	53.36	43.9	24.08	17.83	nd	0.879	0.89	16.2	3.8	bl
02/09/09	12:06	10077.79	51.1%	45.6%	7.51	1.92	56.0	36.5	35.9	35.2	31.1	30.2	26.1	842	860	852	3.3	46.0	52.33	41.88	43.8	25.49	19.11	nd	0.886	0.74	17.7	3.31	bl
02/10/09	9:49	10099.51	56.3%	45.7%	7.49	2.13	56.0	36.0	35.4	34.9	31.1	30.3	27.6	925	944	939	3.3	46.0	51.82	33.96	43.7	27.86	21.09	nd	0.898	0.94	19.5	3.07	bl
02/11/09	0:43	10119.26	61.0%	45.9%	7.53	2.40	56.0	35.2	34.8	34.5	30.9	30.2	28.1	1041	1060	1057	3.2	46.0	51.77	28.02	43.9	31.27	23.95	nd	0.904	1.08	22.3	2.98	bl
02/23/09	10:16	10207.39	66.4%	45.6%	7.51	2.77	58.0	33.7	33.1	32.8	29.9	29.8	28.1	1210	1225	1220	2.4	46.0	52.22	22.13	43.8	36.11	27.54	nd	0.919	0.84	25.8	2.77	bl
02/20/09	9:55	10183.51	40.7%	40.6%	7.51	1.81	57.0	38.8	37.8	36.9	31.2	30.0	21.5	761	783	778	3.0	46.0	64.07	63.78	43.8	24.19	18.01	nd	0.888	1.10	16.0	4.18	bl
02/24/09	9:53	10231.01	45.6%	40.7%	7.51	1.94	57.0	37.2	36.4	35.7	31.0	30.0	23.8	822	842	835	3.0	46.0	63.86	52.18	43.8	25.36	19.33	nd	0.901	1.12	17.3	3.74	bl
02/25/09	9:50	10254.96	51.0%	40.6%	7.49	2.13	58.0	35.9	35.2	34.7	30.5	29.9	25.8	908	928	920	2.9	46.0	63.91	41.93	43.7	28.09	21.11	nd	0.894	1.13	19.1	3.31	bl
02/26/09	10:21	10279.48	55.9%	40.4%	7.47	2.31	57.0	35.5	34.9	34.4	30.6	30.1	27.1	985	1005	999	3.0	46.0	64.26	34.38	43.6	30.34	22.87	nd	0.903	1.18	20.8	3.08	bl
02/27/09	10:06	10303.22	61.1%	40.5%	7.53	2.54	58.0	34.9	34.3	33.9	30.1	29.9	27.6	1082	1105	1099	2.6	46.0	64.38	27.93	43.9	33.31	25.31	nd	0.908	1.19	22.9	2.95	bl
03/02/09	10:35	10321.6	51.0%	50.9%	7.53	2.04	58.0	36.3	35.7	35.0	30.7	30.0	26.1	917	922	920	2.8	46.0	42.42	42.22	43.9	27.42	20.38	nd	0.890	0.45	19.1	3.35	bl
03/03/09	9:15	10344.27	56.3%	51.1%	7.53	2.19	58.0	35.8	35.1	34.5	30.5	30.0	27.2	980	990	982	2.7	46.0	42.06	34.12	43.9	29.02	21.82	nd	0.895	0.45	20.5	3.1	bl
03/04/09	9:20	10368.34	61.3%	51.0%	7.49	2.38	58.0	35.2	34.8	34.2	30.3	30.1	28.0	1061	1075	1065	2.7	46.0	41.98	27.55	43.7	31.14	23.66	nd	0.901	0.45	22.3	2.95	bl
03/05/09	9:19	10392.33	66.4%	51.0%	7.51	2.66	56.0	35.5	35.1	34.8	30.6	30.0	28.8	1182	1198	1188	2.3	46.0	42.15	22.21	43.8	34.76	26.45	nd	0.906	0.45	25.1	2.85	bl
03/06/09	10:18	10417.31	56.0%	56.1%	7.53	2.23	57.0	36.8	36.3	35.8	30.7	30.1	27.3	1010	1020	1015	2.8	46.0	34.32	34.48	43.9	29.69	22.28	nd	0.899	0.30	21.2	3.25	bl
03/09/09	10:48	10437.3	61.4%	55.8%	7.49	2.45	57.0	36.1	35.7	35.2	30.6	30.1	28.2	1101	1110	1104	3.1	46.0	34.62	27.52	43.7	31.91	24.31	nd	0.902	0.27	23.2	3.04	bl
03/10/09	11:36	10462.11	66.0%	55.9%	7.49	2.68	58.0	36.8	35.3	34.9	30.2	30.0	28.6	1195	1200	1198	2.8	46.0	34.52	22.48	43.7	34.98	26.55	nd	0.911	0.30	25.3	2.93	bl
03/11/09	9:32	10484.05	61.0%	61.4%	7.49	2.61	56.0	36.9	36.3	35.9	30.8	30.2	28.2	1175	1180	1178	3.2	46.0	27.52	27.95	43.7	34.16	25.86	nd	0.908	0.19	24.8	3.09	bl
03/12/09	10:06	10508.62	45.5%	45.5%	7.49	1.95	56.0	39.1	38.2	37.4	31.1	30.1	24.0	858	870	860	2.9	46.0	52.42	52.28	43.7	26.07	19.38	nd	0.883	0.63	18.0	3.91	bl
03/16/09	10:06	10522.06	42.0%	41.9%	8.97	1.98	57.0	41.8	40.2	39.0	31.9	29.9	19.2	838	862	850	4.4	54.0	72.46	72.23	52.3	30.96	23.52	nd	0.902	1.58	20.9	5.27	bl
03/20/09	9:35	10552.21	40.3%	40.2%	8.97	1.97	58.0	42.3	40.9	39.7	31.9	29.9	17.9	817	845	830	4.2	54.0	77.65	77.33	52.3	30.88	23.41	nd	0.904	1.94	20.5	5.47	bl
03/23/09	10:14	10568.3	45.6%	40.4%	8.98	2.09	56.0	40.8	39.6	38.5	31.8	30.0	21.9	878	903	890	4.4	54.0	77.15	62.45	52.4	32.74	24.89	nd	0.910	1.90	21.9	4.75	bl
03/25/09	9:28	10595.17	50.7%	40.4%	8.98	2.27	56.0	39.8	38.8	37.9	31.1	29.9	24.1	950	980	962	4.2	55.0	77.31	50.91	52.4	35.38	27.02	nd	0.917	1.97	24.2	4.35	bl
03/26/09	9:30	10619.2	55.8%	40.4%	8.95	2.49	56.0	39.2	38.4	37.8	30.9	29.9	25.8	1040	1068	1059	4.0	54.0	77.11	41.27	52.2	38.48	29.46	nd	0.921	1.99	26.4	3.85	bl
03/27/09	9:33	10643.25	61.1%	40.4%	9.00	2.70	58.0	39.2	38.7	38.1	30.3	29.9	26.5	1140	1170	1159	3.8	54.5	77.32	33.45	52.5	41.86	32.14	nd	0.924	2.02	29.1	3.73	bl
03/31/09	9:50	10667.95	45.7%	45.7%	7.53	1.92	58.0	40.3	39.5	38.9	31.0	30.0	23.6	838	855	841	2.9	46.0	52.16	52.23	43.9	25.77	19.11	nd	0.886	0.88	17.5	4.18	bl
04/02/09	9:30	10697.49	45.6%	45.6%	9.02	2.01	59.0	42.2	41.1	40.1	31.2	29.9	21.8	871	898	881	4.1	54.0	62.78	62.65	52.6	31.17	23.97	nd	0.921	1.13	22.0	5.01	bl
04/03/09	9:14	10721.21	50.7%	45.4%	8.98	2.13	59.0	42.0	41.0	40.1	31.1	29.9	24.1	923	945	939	4.0	54.0	62.92	51.02	52.4	33.39	25.34	nd	0.911	1.12	23.3	4.55	bl
04/07/09	9:16	10746.34	55.7%	45.4%	8.97	2.33	58.0	40.5	39.8	39.0	30.8	29.9	25.9	1018	1039	1024	3.9	54.0	62.97	41.62	52.3	36.89	27.71	nd	0.916	1.16	25.6	4.04	bl
04/08/09	9:34	10770.03	61.1%	45.5%	9.00	2.60	59.0	40.5	39.9	39.2	30.5	29.9	27.2	1137	1159	1141	4.0	55.0	62.99	33.36	52.5	40.65	30.95	nd	0.921	1.15	28.8	3.86	bl
04/09/09	10:05	10794.56	45.5%	45.5%	7.49	1.93	57.0	42.7	41.9	41.0	31.1	30.1	24.0	849	862	859	3.0	46.0	52.24	52.35	43.7	25.91	19.19	nd	0.882	0.76	17.8	4.36	bl
04/10/09	10:04	10818.54	50.6%	50.5%	8.97	2.14	58.0	43.2	42.3	41.5	30.9	29.9	23.9	958	975	961	3.8	54.0	51.24	51.03	52.3	33.32	25.44	nd	0.909	0.81	23.9	4.73	bl
04/14/09	10:23	10846.48	56.0%	50.6%	9.00	2.31	58.0	41.7	40.9	40.1	30.8	30.0	26.0	1035	1045	1040	4.1	54.0	51.33	41.24	52.5	36.41	27.53	nd	0.914	0.82	26.0	4.18	bl
04/16/09	9:47	10883.89	61.1%	50.5%	9.00	2.55	56.0	41.8	41.0	40.4	30.9	30.0	27.5	1140	1159	1148	4.2	55.0	51.41	33.48	52.5	39.70	30.36	nd	0.918	0.84	28.7	4.07	bl
04/17/09	10:02	10908.14	45.7%	45.5%	7.51	1.99	57.0	43.2	42.3	41.8	31.1	30.0	24.1	878	895	880	3.1	46.0	52.36	52.04	43.8	26.51	19.75	nd	0.883	0.79	18.3	4.43	bl
04/21/09	9:06	10929.9	55.9%	55.7%	8.98	2.34	58.0	41.1	40.3	39.8	30.1	29.3	25.8	1062	1078	1067	3.3	55.0	41.62	41.38	52.4	37.16	27.88	nd	0.914	0.48	26.5	4.2	bl
04/22/09	9:33	10954.35	60.9%	55.7%	9.00	2.56	57.0	42.1	41.5	40.9	30.5	29.9	27.2	1155	1165	1159	3.8	55.0	41.72	33.68	52.5	40.24	30.51	nd	0.919	0.48	29.1	4.05	bl
04/23/09	10:07	10978.92	45.6%	45.6%	7.53	1.97	57.0	44.9	44.1	43.3	31.0	30.0	24.1	868	882	878	2.9	46.0	52.37	52.42	43.9	26.32	19.65	nd	0.884	0.76	18.2	4.8	bl
04/24/09	8:46	11001.57	61.1%	60.9%	8.98	2.60	58.0	45.2	44.6	44.0	30.5	29.9	27.2	1185	1200	1192	3.9	55.0	33.65	33.43	52.4	40.62	30.97	nd	0.917	0.30	29.6	4.45	bl
04/29/09	9:27	11049.71	45.6%	45.5%	7.51	1.94	56.0	46.2	45.3	44.7	31.1	30.0	23.9	855	867	860	3.6	46.0	52.42	52.28	43.8	26.03	19.31	nd	0.885	0.88	17.3	4.86	bl
04/30/09	10:10	11074.27	50.8%	45.5%	7.49	2.06	57.0	45.1	44.4	43.8	30.9	30.1	25.9	905	922	918	3.7	46.0	52.29	42.37	43.7	27.34	20.47	nd	0.892	0.85	19.0	4.55	bl
05/01/09	9:36	11092.98	56.1%	45.7%	7.51	2.25	58.0	44.3	43.9	43.2	30.2	29.9	27.0	998	1015	1001	2.6	46.0	51.98	34.28	43.8	29.67	22.36	nd	0.901	0.86	20.9	4.1	bl
05/05/09	9:26	11118.78	61.2%	45.6%	7.49	2.51	58.0	43.5	43.0	42.6	30.1	29.8	27.9	1101	1120	1110	4.6	46.0	52.12	27.65	43.7	32.97	24.91	nd	0.906	0.51	23.3	3.89	bl
05/06/09	7:53	11141.23	66.1%	45.3%	7.44	2.81	56.0	44.0	43.8	43.2	30.1	30.0	28.4	1235	1242	1239	4.5	46.0	52.36	22.21	43.4	36.53	27.67	nd	0.909	0.95	26.1	3.82	bl
05/07/09	9:32	11166.89	45.8%	45.7%	7.53	2.00	57.0	48.1	47.2	46.6	30.8	29.9	23.9	879	897	882	3.1	46.0	52.21	52.05	43.9	27.09	19.93	nd	0.888	0.87	18.4	5.18	bl
05/08/09	12:10	11193.46	46.7%	50.2%	7.47	2.06	57.0	48.0	47.2	46.5	30.5	29.8	24.2	918	930	920	5.0	46.0	43.26	49.70	43.6	27.39	20.40	nd	0.891	0.50	18.9	5.2	bv, unbalanced to adjust PX mixing ie. s
05/12/09	9:26	11279.15	55.9%	51.0%	7.53	2.20	60.0	48.0	47.5	47.0	30.1	29.9	26.9	980	998	985	5.5	46.0	42.19	34.64	43.9	29.34	21.92	nd	0.897	0.45	20.6	4.64	bl
05/13/09	8:55	11302.65	61.1%	50.8%	7.49	2.43	60.0	49.3	48.9	48.5	30.0	29.9	27.5	1083	1099	1088	4.9	46.0	42.27	27.84	43.7	32.09	24.12	nd	0.903	0.50	22.7	4.65	bl
05/18/09	10:06	11353.85	45.7%	45.6%	7.51	1.90	64.0	53.1	52.2	51.6	30.8	29.9	23.2	830	845	839	4.9	46.0	52.28	52.05	43.8	25.83	18.91	nd	0.882	0.75	17.4	5.88	bl
05/20/09	10:10	11378.47	48.5%	55.9%	7.51	2.14	60.0	49.0	48.2	47.7	30.5	29.9	25.1	968	979	970	5.2	46.5	34.57	46.52	43.8	28.14	21.29	nd	0.909	0.37	20.2	5.08	bv, unbalanced to adjust PX mixing ie. s
05/21/09	10:10	11402.29	61.3%	56.2%	7.49	2.43	60.0	46.5	46.1	45.7	29.9	29.8	27.6	1100	1107	1101	4.7	46.5	34.11	27.54	43.7	31.61	24.12	nd	0.917	0.37	22.9	4.29	bl

TIME				CALCULATED PARAMETERS			TEMP	PRESSURES										FLOWS				MAIN PANEL KW METER				VFD KW METER			
		Operation	System	RO	Flux	Power		$P_{MF\text{-}in}$	$P_{MF\text{-}out}$	$P_{CF\text{-}in}$	$P_{CF\text{-}out}$	$P_{PX\text{-}Feed\ In}$	$P_{PX\text{-}conc\ out}$	$P_{PX\text{-}boost\ suct}$	$P_{F\text{-}SYS}$	$P_{C\text{-}SYS}$	$P_{P\text{-}SYS}$	$Q_{F\text{-}HP\ Pump}$	$Q_{PX\ Pump}$	$Q_{Feed\ PX\text{-}In}$	$Q_{P\text{-}SYS}$	A_{sys}	P HP/PX	P booster	Power	PX power	HP Power	Feed Pump	
Date	Time	Time	Recovery %	Recovery %	Gfd	kWh/m3	Influent	(psi)	(psi)	(psi)	(psi)	(psi)	(psi)	(psi)	(psi)	(psi)	(psi)	(gpm)	(gpm)	(gpm)	(gpm)	amp	(kw)	(kw)	Factor	(kw)	(kw)	(kw)	Notes
MM/DD/YY	hh:mm	hh.hh					Temp F	1	2	3	4	5	6	7	8	9	10	11	12	13	14	15	16	17	18	19	20	21	
05/22/09	9:53	11426.19	45.7%	45.7%	7.53	1.98	60.0	53.0	52.1	51.3	31.0	30.0	24.0	870	885	879	5.4	46.5	52.22	52.26	43.9	26.10	19.72	nd	0.903	0.72	17.9	5.85	bl
05/25/09	10:40	11498.97	46.5%	60.9%	7.47	2.37	61.0	55.0	54.1	53.4	28.3	27.0	22.0	1075	1080	1078	5.2	46.5	27.95	50.18	43.6	30.76	23.44	nd	0.911	0.22	22.4	6.1	bv, unbalanced to adjust PX mixing ie. s
05/28/09	9:04	11534.43	45.7%	45.7%	7.49	1.97	60.0	52.5	51.5	50.9	30.8	29.9	23.9	859	877	862	3.1	47.0	51.92	51.86	43.7	25.69	19.52	nd	0.898	0.78	18.0	5.73	bl
05/29/09	11:02	11558.51	61.3%	45.6%	7.47	2.50	60.0	32.1	31.5	31.1	30.0	29.9	28.0	1099	1115	1101	5.1	46.5	52.11	27.56	43.6	32.31	24.71	nd	0.912	0.78	22.9	2.67	bl
06/01/09	10:13	11629.68	61.0%	45.6%	7.49	2.53	60.0	32.1	31.8	31.2	30.0	29.9	27.7	1102	1120	1110	5.1	47.0	52.16	27.91	43.7	32.69	25.11	nd	0.917	0.80	23.4	2.71	bl
06/02/09	9:53	11653.34	61.2%	45.6%	7.49	2.53	60.0	32.1	31.7	31.2	30.0	29.9	27.6	1104	1121	1115	5.1	48.0	52.04	27.74	43.7	32.86	25.07	nd	0.918	0.78	23.3	2.73	bl
06/03/09	9:45	11677.20	61.3%	45.7%	7.47	2.51	60.0	32.0	31.6	31.1	29.9	29.8	27.5	1099	1117	1101	5.0	48.0	51.78	27.48	43.6	32.51	24.84	nd	0.914	0.75	23.1	2.74	bl
06/04/09	8:30	11698.37	61.1%	45.8%	7.51	2.51	60.0	32.1	31.7	31.1	30.0	29.9	27.8	1100	1120	1105	5.2	48.0	51.88	27.86	43.8	32.39	24.97	nd	0.916	0.78	23.3	2.72	bl
06/05/09	8:58	11722.83	61.0%	45.8%	7.51	2.51	61.0	32.0	31.7	31.1	30.0	29.9	27.7	1101	1120	1107	5.2	48.0	51.84	28.05	43.8	32.79	25.01	nd	0.915	0.80	23.3	2.73	bl
06/08/09	9:20	11795.22	61.2%	45.6%	7.53	2.49	62.0	32.1	31.5	31.1	29.8	29.8	27.4	1100	1117	1101	5.0	48.0	52.36	27.84	43.9	32.63	24.85	nd	0.917	0.82	23.2	2.75	bl
06/09/09	9:43	11819.58	61.4%	45.5%	7.51	2.51	62.0	32.2	31.9	31.3	30.0	29.9	27.6	1100	1120	1103	5.2	48.0	52.43	27.57	43.8	32.71	24.98	nd	0.916	0.78	23.3	2.75	bl
06/10/09	9:33	11843.42	60.9%	45.7%	7.51	2.52	62.0	32.1	31.8	31.1	29.8	29.6	27.5	1101	1120	1110	5.0	48.0	52.05	28.13	43.8	32.47	25.04	nd	0.917	0.75	23.4	2.8	bl
06/11/09	8:46	11862.30	61.4%	45.7%	7.49	2.53	62.0	32.1	31.7	31.1	29.9	29.9	27.5	1101	1120	1107	5.1	48.0	52.02	27.44	43.7	32.48	25.09	nd	0.915	0.78	23.3	2.75	bl
06/12/09	9:25	11886.91	61.3%	45.5%	7.49	2.51	62.0	32.3	31.9	31.3	29.9	29.9	27.6	1102	1120	1110	5.1	48.0	52.25	27.63	43.7	32.47	24.94	nd	0.919	0.80	23.4	2.83	bl
06/15/09	8:45	11958.28	61.3%	45.5%	7.51	2.52	62.0	32.6	32.0	31.7	29.9	29.9	27.5	1101	1120	1110	5.1	48.0	52.41	27.63	43.8	32.68	25.09	nd	0.919	0.75	23.3	2.85	bl
06/16/09	15:05	11987.80	60.8%	45.9%	7.51	2.48	63.0	32.0	31.5	31.0	29.0	29.0	27.0	1085	1105	1095	4.6	48.0	51.65	28.21	43.8	32.51	24.63	nd	0.921	0.80	23.2	2.75	bv
06/17/09	14:15	12011.00	61.1%	45.3%	7.46	2.52	63.0	32.0	31.4	31.0	29.0	29.3	27.0	1100	1120	1110	4.5	48.0	52.49	27.73	43.5	32.88	24.87	nd	0.918	0.90	23.2	2.9	bv
06/18/09	10:40	12031.39	61.3%	45.9%	7.53	2.49	63.0	32.0	31.5	31.0	29.5	29.2	27.2	1105	1125	1115	5.2	48.0	51.82	27.68	43.9	32.84	24.87	nd	0.924	0.80	23.3	2.7	bv
06/22/09	8:52	12125.60	61.2%	45.8%	7.51	2.56	61.0	32.1	31.7	31.1	29.9	29.8	27.6	1120	1138	1123	3.1	50.0	51.78	27.74	43.8	33.29	25.44	nd	0.919	0.75	23.7	2.77	bl
06/24/09	9:31	12149.96	61.4%	45.7%	7.51	2.56	61.0	32.2	31.8	31.2	29.9	29.8	27.7	1119	1139	1123	5.1	49.5	51.97	27.55	43.8	33.71	25.42	nd	0.909	0.78	23.8	2.75	bl
06/25/09	9:32	12173.97	61.4%	45.6%	7.51	2.54	62.0	32.3	31.9	31.3	30.0	29.9	27.8	1115	1125	1119	5.2	50.0	52.18	27.53	43.8	33.33	25.23	nd	0.911	0.80	23.5	2.73	bl
06/26/09	14:35	12203.02	61.1%	45.8%	7.49	2.53	62.0	32.0	31.3	31.0	29.5	29.5	27.4	1110	1125	1119	4.6	50.0	51.77	27.78	43.7	33.31	25.15	nd	0.911	0.77	23.4	2.85	bl
06/29/09	9:50	12270.27	61.3%	45.7%	7.49	2.55	62.0	32.3	31.9	31.3	29.9	29.9	27.7	1118	1131	1120	5.1	50.0	51.96	27.57	43.7	33.20	25.29	nd	0.909	0.80	23.7	2.87	bl
06/30/09	8:50	12293.27	61.2%	45.7%	7.49	2.54	62.0	32.5	31.9	31.3	30.0	29.9	27.7	1107	1123	1117	5.1	50.0	51.85	27.65	43.7	33.38	25.16	nd	0.908	0.75	23.4	2.77	bl
07/01/09	7:30	12315.95	61.2%	45.6%	7.51	2.56	60.0	32.7	32.1	31.6	30.0	29.9	27.8	1120	1140	1125	5.1	50.0	52.19	27.74	43.8	33.41	25.45	nd	0.909	0.78	23.3	2.8	bl

Water Quality Data

TIME			pH			CONDUCTIVITY						TDS							TURBIDITY		SDI	BORON			OTHER					
			pH			Conductivity (mS/cm)						TDS (mg/L)							Turbidity (NTU)		Density Index	Boron (mg/L)				Inhibitor Pump			FEED VFD	
Date	Time	Operation Time	$pH_{F\text{-}sys}$	$pH_{P\text{-}sys}$	$pH_{C\text{-}sys}$	$C_{CF\text{-}out}$	$C_{F\text{-}PX\text{-}out}$	$C_{F\text{-}sys}$	$C_{P\text{-}sys}$	$C_{C\text{-}sys}$	$C_{C\text{-}PX\text{-}out}$	$TDS_{CF\text{-}out}$	$TDS_{F\text{-}PX\text{-}out}$	PX % Inc	$TDS_{F\text{-}sys}$	$TDS_{P\text{-}sys}$	$TDS_{C\text{-}sys}$	$TDS_{C\text{-}PX\text{-}out}$	$NTU_{MF\text{-}in}$	$NTU_{CF\text{-}out}$	$SDI_{CF\text{-}out}$	$B_{\text{-concentrate}}$	$B_{F\text{-}sys}$	$B_{P\text{-}sys}$	V_{TANK}	Speed	HP VFD Speed	PX VFD Speed	Speed	Notes
MM/DD/YY	hh:mm	hh.hh	SC5	SC11	SC6	SC3	SC4	SC5	SC11	SC6	SC7	SC3	SC4		SC5	SC11	SC6	SC7	CART	meter	CART		SC5	SC11	(gallons)	(gph)	(Hertz)	(Hertz)	(Hertz)	
PX Unbalanced High Recovery Test - Hydranautics SWC5 Membranes												**Membrane Ripening Period**																		
01/30/09	10:52	9896.15	7.78	6.21	7.62	50.61	52.99	51.84	258.5	83.81	81.72	32.48	34.16	5.2%	33.36	122.60	60.09	58.05	1.989	0.029	2.1			nd	nd	nd	45.09	34.54	55.45	bl
02/02/09	9:55	9967.19	7.82	6.30	7.68	50.15	54.06	51.74	247.2	82.44	81.58	32.22	34.93	8.4%	33.35	117.40	58.84	57.98	1.289	0.035	2.1			nd	nd	nd	45.12	36.37	55.74	bl
02/03/09	10:55	9992.19	7.85	6.28	7.66	50.22	54.05	51.59	249.6	82.93	81.85	32.21	34.96	8.5%	33.25	118.70	59.26	58.29	1.041	0.035	2.2			nd	nd	nd	45.12	35.92	55.45	bl
02/04/09	10:45	10016.02	7.87	6.29	7.68	50.35	54.35	51.78	268.6	86.58	84.61	32.36	35.21	8.8%	33.37	127.90	62.57	60.76	1.032	0.034	2.4			0.83	nd	nd	45.12	32.23	54.75	bl
02/05/09	10:49	10040.48	7.88	6.28	7.68	50.49	55.38	52.11	261.9	85.99	84.89	32.47	36.08	11.1%	33.63	124.70	62.04	61.01	1.797	0.036	2.3			nd	nd	nd	45.15	33.46	54.91	bl
02/06/09	10:12	10063.47	7.85	6.34	7.68	50.02	54.96	51.61	254.9	85.52	84.38	32.16	35.76	11.2%	33.25	121.30	61.63	60.56	3.180	0.034	2.4			0.83	nd	nd	45.17	33.49	55.16	bl
02/09/09	12:34	10078.26	7.83	6.17	7.64	50.18	60.39	53.59	320.9	93.29	92.69	32.27	40.25	24.7%	34.69	153.70	68.69	68.09	2.217	0.029	2			0.88	nd	nd	45.15	30.03	52.94	bl
02/10/09	10:14	10099.91	7.74	5.93	7.52	50.37	70.44	56.95	337.8	100.5	100.4	32.38	48.41	49.5%	37.35	161.90	75.21	75.08	4.930	0.026	1.7			nd	nd	nd	45.17	30.91	51.83	bl
02/11/09	10:34	10119.78	7.72	5.77	7.45	50.45	80.95	61.15	372.4	109.2	109.1	32.44	57.59	77.5%	40.81	178.70	83.11	82.99	2.949	0.024	1.8	9.8	5.4	0.96	nd	nd	45.72	31.35	51.22	bl
02/23/09	10:40	10207.79	7.59	5.79	7.34	49.93	93.08	65.19	513.4	119.2	119.4	32.05	68.46	113.6%	44.09	247.80	92.07	92.18	2.841	0.032	2.8	10.0	5.8	1.10	nd	nd	45.91	31.23	50.25	bl
02/20/09	10:24	10183.99	7.71	6.11	7.56	49.81	52.08	50.81	270.3	80.75	79.17	31.94	33.56	5.1%	32.67	128.50	57.27	55.81	5.005	0.030	2.2	7.1	4.5	0.79	nd	nd	45.03	36.15	56.58	bl
02/24/09	10:22	10231.49	7.71	6.04	7.53	50.21	57.79	53.42	287.5	85.16	84.92	32.27	38.05	17.9%	34.52	137.10	61.33	61.04	3.142	0.029	2.6	7.5	4.6	0.83	nd	nd	45.15	36.42	55.24	bl
02/25/09	10:19	10255.44	7.82	5.99	7.46	50.39	67.06	56.78	329.1	93.49	93.29	32.38	45.65	41.0%	37.19	157.50	68.84	68.62	6.570	0.030	2.8	8.3	4.7	0.92	nd	nd	45.14	36.16	52.78	bl
02/26/09	10:54	10280.03	7.67	5.91	7.47	50.41	76.69	60.13	376.8	100.8	100.6	32.41	53.69	65.7%	39.97	180.90	75.44	75.26	3.664	0.031	2.6	8.9	5.3	1.00	nd	nd	45.12	36.86	51.72	bl
02/27/09	10:35	10303.71	7.65	5.82	7.43	50.39	86.21	64.65	425.2	109.1	108.9	32.41	62.24	92.0%	43.66	204.50	82.94	82.67	3.406	0.030	2.5	9.6	5.4	1.10	nd	nd	45.64	36.88	51.12	bl
03/02/09	11:09	10322.16	7.63	5.88	7.43	50.37	57.62	52.87	349.4	96.26	93.19	32.39	37.93	17.1%	34.16	167.40	71.31	68.52	2.124	0.030	2.4	8.5	4.6	0.91	nd	nd	45.41	26.31	53.22	bl, PX mixing issues
03/03/09	9:55	10394.94	7.64	5.87	7.41	50.43	65.47	55.27	388.1	102.4	101.3	32.39	44.38	37.0%	36.01	186.40	76.92	75.89	2.401	0.029	2.4	9.2	5.2	0.97	nd	nd	45.41	26.31	51.98	bl
03/04/09	9:58	10368.98	7.63	5.81	7.36	50.19	75.26	58.67	441.5	109.9	109.7	32.25	52.41	62.5%	38.76	212.50	83.79	83.41	3.244	0.030	2.7	10.0	5.2	1.10	nd	nd	45.39	26.31	51.25	bl
03/05/09	9:50	10392.84	7.65	5.76	7.34	50.17	86.36	63.39	490.4	118.5	118.3	32.24	62.44	93.7%	42.65	236.80	91.55	91.21	2.775	0.039	2.7	11.0	5.5	1.10	nd	nd	45.67	26.25	50.99	bl
03/06/09	11:31	10418.53	7.57	5.84	7.37	50.42	60.39	53.54	371.6	105.5	100.4	32.41	40.19	24.0%	34.64	178.30	79.78		3.497	0.038	2.7	9.6	4.8	0.97	nd	nd	45.46	22.41	52.72	bl, PX mixing issues
03/09/09	11:13	10437.73	7.64	5.83	7.36	49.34	68.01	55.08	459.3	110.7	107.8	31.67	46.54	47.0%	35.85	221.50	84.41	81.76	3.818	0.031	3.1			nd	nd	nd	45.47	21.94	52.29	bl
03/10/09	12:25	10462.93	7.67	5.74	7.37	49.23	76.63	58.75	485.7	115.5	114.5	31.57	53.74	70.2%	38.87	234.50	88.82	87.79	3.402	0.032	3.3			nd	nd	nd	45.88	22.68	51.62	bl
03/11/09	10:11	10484.69	7.66	5.71	7.31	49.31	64.15	53.89	452.9	116.2	106.3	31.64	43.29	36.8%	34.91	218.30	89.39	80.44	2.361	0.032	3.1			nd	nd	nd	45.91	18.72	52.14	bl, PX mixing issues
03/12/09	10:33	10509.08	7.69	5.99	7.52	49.29	52.57	50.39	270.8	86.05	83.11	31.61	33.98	7.5%	32.43	129.00	62.13	59.38	2.562	0.031	3.6			nd	nd	nd	45.35	30.09	55.81	bl
03/16/09	8:09	10522.54	7.78	5.98	7.62	49.26	51.56	50.03	242.1	81.07	79.62	31.60	33.25	5.2%	32.16	114.90	57.58	56.23	1.145	0.031	3.9	7.4	4.5	0.74	nd	nd	53.82	40.66	60.21	bl
03/20/09	10:05	10552.70	7.73	6.07	7.66	49.34	51.63	50.13	241.5	79.03	78.03	31.66	33.32	5.2%	32.25	114.70	55.78	54.81	2.783	0.031	3.4	7.1	4.6	0.73	nd	nd	53.82	43.59	61.23	bl
03/23/09	10:19	10568.79	7.61	5.74	7.45	49.38	58.31	52.96	260.7	85.14	84.76	31.68	38.51	21.6%	34.21	124.10	61.28	60.91	2.783	0.031	3.1	8.4	4.7	0.77	nd	nd	53.82	43.24	58.45	bl
03/25/09	9:57	10595.56	7.56	5.71	7.43	49.28	65.34	56.03	279.1	90.92	90.79	31.63	44.19	39.7%	36.59	133.10	66.52	66.34	1.703	0.031	2.9	9.3	5.1	0.82	nd	nd	54.25	43.65	57.45	bl
03/26/09	9:58	10619.67	7.61	5.67	7.42	49.37	75.15	59.56	326.6	99.12	98.88	31.69	52.32	65.1%	39.51	156.20	73.89	73.66	3.212	0.034	2.8	10.0	5.6	0.90	nd	nd	54.38	43.83	55.73	bl
03/27/09	10:01	10643.72	7.74	5.77	7.48	49.23	84.74	62.49	385.4	107.3	107.1	31.58	60.89	92.8%	41.87	184.80	81.32	81.02	1.445	0.031	2.6	8.0	5.9	1.00	nd	nd	54.69	44.03	55.32	bl
03/31/09	10:22	10668.48	7.73	6.02	7.54	49.21	52.81	50.32	319.1	85.82	83.16	31.55	34.11	8.1%	32.37	152.60	61.89	59.44	1.012	0.032	3.5	7.8	4.7	0.90	nd	nd	45.47	30.62	57.09	bl
04/02/09	10:01	10697.99	7.81	6.11	7.59	49.29	52.77	50.63	274.3	85.89	83.71	31.62	34.11	7.9%	32.58	130.70	61.97	59.92	1.064	0.031	2.8	7.8	4.5	0.79	nd	nd	54.39	36.31	59.97	bl
04/03/09	10:02	21.99	7.76	5.99	7.56	49.41	58.81	52.38	292.8	90.95	90.62	31.71	38.93	22.8%	33.84	139.80	66.63	66.19	3.601	0.029	2.5	8.3	4.9	0.85	nd	nd	54.38	36.15	58.41	bl
04/07/09	9:47	10746.86	7.74	5.86	7.39	49.32	68.82	55.81	333.7	98.46	98.36	31.64	47.07	48.8%	36.42	159.80	73.36	73.18	1.785	0.030	2.2	9.3	5.2	0.92	nd	nd	54.38	36.42	56.55	bl
04/08/09	10:06	10770.57	7.65	5.73	7.42	49.41	79.81	62.64	387.9	107.3	107.6	31.70	56.62	78.6%	42.03	186.50	81.61	81.56	3.032	0.028	2.3	10.0	5.5	1.00	nd	nd	54.62	36.42	55.98	bl
04/09/09	10:32	10795.00	7.62	5.79	7.44	49.36	52.97	50.61	283.3	87.01	84.07	31.64	34.23	8.2%	32.56	135.10	62.94	60.26	2.236	0.030	2.1	8.2	4.6	0.87	nd	nd	45.09	30.27	57.97	bl
04/10/09	10:30	10818.98	7.64	5.75	7.43	49.38	53.96	51.14	271.8	93.24	90.15	31.68	34.94	10.3%	32.94	129.40	68.62	65.81	2.375	0.030	2.3	8.5	4.7	0.82	nd	nd	54.19	30.53	59.35	bl, PX mixing issues
04/14/09	10:57	10847.05	7.59	5.69	7.38	49.51	62.74	53.76	318.1	100.4	99.82	31.78	42.08	32.4%	34.81	152.20	75.16	74.47	2.279	0.029	2.6	9.3	4.9	0.88	nd	nd	54.48	30.43	57.26	bl
04/16/09	10:14	10884.35	7.52	5.57	7.29	49.54	73.02	57.71	341.5	107.9	107.6	31.81	50.54	58.9%	37.98	163.70	81.93	81.60	2.138	0.027	2.4	10.0	5.4	0.94	nd	nd	54.44	30.88	57.06	bl
04/17/09	10:30	10908.61	7.53	5.62	7.37	49.56	53.76	51.33	262.7	87.07	83.97	31.82	34.77	9.3%	33.07	125.20	63.01	60.18	2.139	0.032	1.9	7.9	4.7	0.84	nd	nd	45.11	30.59	58.38	bl
04/21/09	9:44	10930.53	7.55	5.64	7.39	49.17	59.11	52.41	319.8	102.8	99.16	31.42	39.01	24.2%	33.81	152.60	77.25	73.89	2.664	0.029	2.3	9.4	4.7	0.91	nd	nd	54.38	26.82	57.46	bl, PX mixing issues
04/22/09	10:00	10954.79	7.53	5.53	7.26	49.52	67.82	55.58	346.9	110.3	108.7	31.75	46.26	45.7%	36.23	166.10	84.06	82.58	2.003	0.030	2.2	11.0	5.0	0.95	nd	nd	54.84	26.67	57.12	bl
04/23/09	10:33	10979.34	7.66	5.98	7.49	49.48	53.61	51.09	279.8	86.93	83.88	31.74	34.66	9.2%	32.88	133.40	62.92	60.08	1.664	0.031	3	8.2	4.5	0.89	nd	nd	45.32	30.35	59.97	bl
04/24/09	9:17	11002.09	7.67	5.84	7.36	49.57	62.81	54.26	369.1	114.1	108.1	31.83	42.17	32.5%	35.16	177.10	87.51	82.02	1.776	0.031	3.7	11.0	4.9	0.98	nd	nd	54.49	22.76	58.97	bl, PX mixing issues
04/29/09	9:55	11050.18	7.82	6.33	7.62	49.55	53.55	50.91	307.1	86.65	83.88	31.81	34.64	8.9%	32.79	146.70	62.67	60.11	1.614	0.031	4.1	7.8	4.4	0.86	nd	nd	45.32	30.67	60.36	bl
04/30/09	10:42	11074.81	7.79	6.21	7.56	49.57	59.88	52.95	344.1	91.69	90.99	31.83	39.82	25.1%	34.22	164.90	67.22	66.52	1.749	0.029	4.3	8.3	4.7	0.93	nd	nd	45.32	30.50	59.17	bl
05/01/09	10:07	11093.51	7.72	6.01	7.47	49.51	69.13	56.42	386.7	99.26	99.08	31.77	47.36	49.1%	36.92	185.50	74.02	73.79	2.614	0.030	3.9	9.0	5.0	0.99	nd	nd	45.29	30.53	57.79	bl
05/05/09	9:55	11119.27	7.61	5.85	7.37	49.42	79.86	60.69	450.8	107.3	107.2	31.71	56.49	78.1%	40.37	217.10	81.36	81.25	2.368	0.030	3.3	9.9	5.6	1.10	nd	nd	45.53	31.11	56.94	bl
05/06/09	8:22	11141.72	7.51	5.69	7.26	49.44	89.95	66.56	488.2	115.6	115.4	31.73	65.63	106.8%	45.21	235.40	88.81	88.62	2.823	0.030	3.2	11.0	5.8	1.20	nd	nd	45.51	31.35	56.98	bl
05/07/09	10:00	11167.35	7.57	5.86	7.39	49.51	54.19	51.43	286.1	87.26	83.96	31.76	35.09	10.5%	33.13	136.30	63.18	60.19	3.956	0.030	2.6	7.9	4.7	0.88	nd	nd	45.49	30.65	61.53	bl
05/08/09	12:20	11193.61	7.49	6.64	7.41	49.57	54.25	51.17	310.5	91.95	85.74	31.83	35.14	10.4%	32.95	148.00	67.42	61.67	3.898	0.030	2.6	8.5	4.7	0.93	nd	nd	45.47	27.23	62.03	bv, simulated 7-10% PX mixing
05/12/09	10:01	11279.73	7.85	6.26	7.59	49.42	62.58	53.85	403.1	99.32	97.64	31.71	41.98	32.4%	34.85	193.60	74.06	72.54	1.891	0.030	4.2	9.1	4.9	1.00	nd	nd	45.46	26.57	60.27	bl
05/13/09	9:28	11303.19	7.81	6.11	7.53	49.38	74.05	57.53	469.8	107.2	106.9	31.68	51.34	62.1%	37.83	226.30	81.27	80.98	2.362	0.029	3.8	10.0	5.5	1.20	nd	nd	45.44	27.28	61.04	bl
05/18/09	11:10	11354.91	8.06	7.19	7.82	49.52	53.19	50.76	381.5	86.06	83.65	31.81	34.42	8.2%	32.73	183.20	62.19	59.89	1.216	0.034	2.7	7.9	4.8	1.00	nd	nd	45.48	30.85	64.93	bl
05/20/09	10:38	11379.93	7.81	6.18	7.52	49.43	54.36	51.16	402.9	98.74	87.41	31.71	35.29	11.3%	32.94	193.50	73.54	63.32	2.429	0.032	3.7	9.3	4.8	1.10	nd	nd	45.46	23.23	61.75	bl
05/21/09	10:44	11403.04	7.66	5.93	7.36	49.16	67.41	56.52	460.5	108.2	105.9	31.54	45.88	45.5%	36.98	221.70	82.25	80.12	2.306	0.032	2.3	10.0	5.2	1.20	nd	nd	45.41	23.17	59.11	bl

Water Quality Data

TIME			pH			CONDUCTIVITY						TDS							TURBIDITY		SDI	BORON			OTHER					
			pH			Conductivity (mS/cm)						TDS (mg/L)							Turbidity (NTU)		Density Index	Boron (mg/L)				Inhibitor Pump			FEED VFD	
Date	Time	Operation Time	$pH_{F\text{-}sys}$	$pH_{P\text{-}sys}$	$pH_{C\text{-}sys}$	$C_{CF\text{-}out}$	$C_{F\text{-}PX\text{-}out}$	$C_{F\text{-}sys}$	$C_{P\text{-}sys}$	$C_{C\text{-}sys}$	$C_{C\text{-}PX\text{-}out}$	$TDS_{CF\text{-}out}$	$TDS_{F\text{-}PX\text{-}out}$	PX % Inc	$TDS_{F\text{-}sys}$	$TDS_{P\text{-}sys}$	$TDS_{C\text{-}sys}$	$TDS_{C\text{-}PX\text{-}out}$	$NTU_{MF\text{-}in}$	$NTU_{CF\text{-}out}$	$SDI_{CF\text{-}out}$	$B_{\text{-}concentrate}$	$B_{F\text{-}sys}$	$B_{P\text{-}sys}$	V_{TANK}	Speed	HP VFD Speed	PX VFD Speed	Speed	Notes
MM/DD/YY	hh:mm	hh.hh	SC5	SC11	SC6	SC3	SC4	SC5	SC11	SC6	SC7	SC3	SC4		SC5	SC11	SC6	SC7	CART	meter	CART		SC5	SC11	(gallons)	(gph)	(Hertz)	(Hertz)	(Hertz)	
05/22/09	10:33	11426.85	7.69	6.06	7.48	49.42	54.14	50.95	307.7	87.09	83.59	31.72	35.07	10.6%	32.81	147.10	63.07	59.83	2.223	0.032	2.2	8.1	4.8	0.94	nd	nd	45.49	30.91	64.62	bl
05/25/09	11:10	11499.49	7.76	5.98	7.41	49.41	54.96	51.38	460.7	108.3	83.92	31.71	35.76	12.8%	33.12	221.90	82.41	60.16	1.391	0.031	2.1	10.0	4.8	1.10	nd	nd	45.44	19.54	66.00	bl
05/28/09	9:35	11534.96	7.67	5.99	7.48	49.42	54.31	51.14	321.3	86.79	83.79	31.71	35.19	11.0%	32.94	153.70	62.81	60.01	1.757	0.032	2.1	7.9	4.8	0.96	nd	nd	45.47	31.06	64.55	bl
05/29/09	11:32	11559.00	7.65	5.89	7.41	49.39	77.71	59.43	439.7	105.3	105.1	31.66	54.58	72.4%	39.36	211.60	79.52	79.34	2.335	0.048	1.7	9.8	5.5	1.10	nd	nd	45.44	31.26	49.95	bl
06/01/08	10:43	11630.18	7.61	5.79	7.39	49.43	78.59	59.45	421	106.4	106.3	31.71	55.42	74.8%	39.39	202.40	80.53	80.47	2.111	0.045	1.7	nd	nd	nd	nd	nd	45.79	31.73	49.59	bl
06/02/09	10:18	11653.76	7.65	5.78	7.41	49.36	78.55	58.51	423.7	106.6	106.5	31.65	55.41	75.1%	38.62	203.80	80.68	80.53	1.905	0.045	1.8	nd	nd	nd	nd	nd	45.80	31.67	49.66	bl
06/03/09	10:23	11677.84	7.67	5.81	7.41	49.39	78.69	60.18	430.1	106.2	106.1	31.68	55.51	75.2%	40.01	206.80	80.43	80.25	2.151	0.046	2.2	9.5	5.4	1.1	nd	nd	45.79	31.71	49.66	bl
06/04/09	9:02	11698.92	7.68	5.88	7.42	49.36	78.28	61.71	464.1	106.3	106.1	31.67	55.11	74.0%	41.24	223.70	80.45	80.22	2.012	0.047	2.4	nd	nd	nd	nd	nd	45.80	31.29	49.72	bl
06/05/02	9:27	11723.33	7.62	5.81	7.39	49.31	78.86	60.26	446.7	106.4	106.5	31.61	55.62	76.0%	40.04	215.10	80.67	80.59	2.237	0.034	2.5	nd	nd	nd	nd	nd	45.81	31.46	49.66	bl
06/08/09	9:50	11795.71	7.66	5.92	7.44	49.21	78.93	59.96	476.7	105.8	106	31.56	55.67	76.4%	39.81	229.90	80.19	80.12	1.713	0.032	2.6	nd	nd	nd	nd	nd	45.79	32.17	50.18	bl
06/09/09	10:21	11820.23	7.72	5.89	7.46	49.29	78.96	60.73	453.7	106.4	106.2	31.62	55.79	76.4%	40.45	218.50	80.49	80.33	3.155	0.032	2.5	nd	nd	nd	nd	nd	45.81	32.08	49.85	bl
06/10/09	10:03	11843.92	7.69	5.86	7.44	49.22	78.36	58.09	438.1	106.1	106.1	31.56	55.23	75.0%	38.29	210.70	80.36	80.24	2.663	0.031	2.3	nd	nd	nd	nd	nd	45.79	31.76	50.11	bl
06/11/09	9:15	11862.78	7.72	5.90	7.47	49.27	79.11	61.15	480.6	106.5	106.5	31.61	55.91	76.9%	40.79	231.80	80.71	80.61	1.693	0.031	2.3	nd	nd	nd	nd	nd	45.79	31.63	49.84	bl
06/12/09	9:57	11887.47	7.66	5.85	7.43	49.34	79.03	61.59	455.2	106.4	106.4	31.65	55.75	76.1%	41.15	219.20	80.71	80.53	2.244	0.041	2.1	nd	nd	nd	nd	nd	45.79	31.64	50.22	bl
06/15/09	9:26	11658.88	7.69	5.87	7.48	49.31	79.19	60.16	455.6	106.6	106.6	31.61	55.94	77.0%	39.97	219.30	80.75	80.63	1.643	0.063	2.5	nd	nd	nd	nd	nd	45.79	31.93	50.32	bl
06/16/09	14:50	11987.56	7.81	6.64	7.56	49.12	78.04	58.04	476.5	105.5	105.2	31.72	54.86	73.0%	38.23	229.70	79.76	79.44	2.153	0.047	3.2	nd	nd	nd	nd	nd	45.79	31.85	50.23	bv
06/17/09	14:25	12011.13	7.80	6.17	7.53	49.16	80.06	60.32	482.7	106.9	106.6	31.53	56.67	79.7%	40.08	232.80	80.99	80.64	1.779	0.048	3.3	9.6	5.5	1.1	nd	nd	45.78	32.32	50.01	bv
06/18/09	10:50	12031.56	7.78	6.10	7.50	49.28	79.47	59.48	475.3	106.5	106.1	31.62	56.19	77.7%	39.43	229.20	80.66	80.26	0.048	0.048	3.4	nd	nd	nd	nd	nd	45.79	31.90	50.35	bv
06/22/09	9:24	12126.13	7.65	5.75	7.41	49.23	78.93	59.02	407.5	106.8	106.7	31.53	55.68	76.6%	39.03	195.70	80.95	80.81	2.615	0.031	2.5	9.6	5.3	1.1	nd	nd	45.79	31.64	49.91	bl
06/24/09	10:15	12150.69	7.67	5.81	7.42	49.29	78.85	61.19	445.5	106.5	106.6	31.62	55.61	75.9%	40.84	214.40	80.66	80.72	2.083	0.034	3.2	nd	nd	nd	nd	nd	45.79	31.64	49.75	bl
06/25/09	9:59	12174.42	7.78	5.91	7.51	49.38	78.99	61.29	465.3	106.3	106.2	31.69	55.79	76.0%	40.92	224.30	80.49	80.34	1.587	0.033	2.3	9.5	5.4	1.1	nd	nd	45.81	31.76	49.95	bl
06/26/09	15:12	12203.66	7.75	5.93	7.47	49.16	78.12	61.64	459.6	105.8	105.7	31.54	54.95	74.2%	41.17	221.30	80.03	79.89	3.023	0.037	2.2	nd	nd	nd	nd	nd	45.79	31.73	50.51	bl
06/29/09	10:30	12270.96	7.71	5.88	7.48	49.31	78.11	59.72	437.1	105.9	105.9	31.64	54.98	73.8%	39.62	210.30	80.22	80.11	1.493	0.034	2.4	nd	nd	nd	nd	nd	45.80	31.71	50.71	bl
06/30/09	9:21	12293.79	7.73	5.87	7.47	49.32	78.61	60.71	447.2	106.3	106.2	31.66	55.45	75.1%	40.45	215.30	80.48	80.32	1.346	0.034	2.4	9.6	5.3	1.1	nd	nd	45.79	31.70	50.01	bl
07/01/09	8:00	12316.46	7.68	5.78	7.42	49.36	78.12	60.77	396.4	105.6	105.5	31.65	55.01	73.8%	40.47	190.40	79.86	79.66	2.003	0.034	2	nd	nd	nd	nd	nd	45.82	32.12	50.06	bl

Amiad AMF skid																																			
Date	Time	Hour Meter P1 (hrs)	KW	Temp (F)	Inlet Flow Time for 20 cu.ft (sec)	Inlet Flow Calc'd Flow Rate (gpm)	Inlet Totalizer (cu.ft.)	Intake Flow Magmeter FS-17 (gpm	Flow Meter-SAF Inlet (gpm)	Flow Meter-SAF Inlet Total (gal)	Flow Meter-SAF Outlet (gpm)	Flow Meter-SAF Outlet Total (gal)	Flow Meter-AMF Outlet (gpm)	Flow Meter-AMF Outlet Total (gal)	Outlet Flow Time for 200 gal (sec)	Outlet Flow Calc'd Flow Rate (gpm)	Outlet Totalizer (gal)	Raw Inlet Press (PSI)	AMF Inlet Press (PSI)	AMF Outlet Press (PSI)	Raw Water Turbidity (NTU)	Raw Water pH	Raw Water Cond (mS/cm)	Raw Water Dissolved Oxygen (ppm)	Raw Water Particle Count	Post Strainer Turbidity (NTU)	Post Strainer Particle Count	Filtrate Turbidity (NTU)	Filtrate SDI (15)	Filtrate Particle Count	Raw Water Fluor Chlorophyll A	Filtrate Fluor Chlorophyll A	SAF Flush Counter	AMF Flush Counter	Comments
cartridges																																			
4/2/2009	15:56	3232.80	4.20	nd	52.9	169.7	240370	155	168	30267	161	30093	158	30615	76.4	157.1	21183500	38.1	33.5	30.5	5.09	8.06	53.1	7.5	nd	4.325	nd	0.116	5.22	109509	nd	nd	2	1	
4/3/2009	11:06	3251.90	4.20	nd	54.3	165.3	262050	159	155	182448	151	180204	155	186837	76	157.9	21339700	38.1	34	27	4.86	8.05	54.6	7.8	nd	4.768	nd	0.145	5.36	191951	nd	nd	23	15	
4/6/2009	10:21	3253.50	4.20	nd	57.1	157.2	264010	151	157	197135	152	194080	161	201531	77	155.8	21353700	38	33	28	1.63	7.98	51.2	7.3	nd	1.589	nd	0.079	4.45	121768	34.94	20.62	24	15	
4/8/2009	11:32	3302.50	4.20	nd	54.4	165.0	322950	161	154	610014	149	598702	171	634984	72.2	166.2	21785200	38	35	32.5	3.704	7.97	52.8	6.98	nd	3.354	nd	0.118	4.83	106062	53.73	25.84	46	43	
4/10/2009	11:45	3350.50	4.20	nd	54.1	165.9	381130	154	162	1020482	148	993942	165	1070246	73.5	163.3	22214300	38.2	35	31	3.748	7.89	53.1	6.01	nd	2.985	nd	0.126	5.67	73707	34.02	17.17	60	66	
4/13/2009	9:28	3353.40	4.20	nd	53.6	167.5	384660	157	165	1045727	161	1017551	169	1096315	71.8	167.1	22240000	38	33.5	32.5	2.246	7.87	51.2	6.25	nd	2.189	nd	0.116	4.76	67180	32.66	17.22	61	67	
4/15/2009	9:30	3401.10	4.20	nd	52.9	169.7	441400	158	156	1435672	155	1402376	168	1521343	70.8	169.5	22656000	38	34.5	33.5	4.486	7.9	54.6	6.63	nd	4.329	nd	0.178	5.91	94418	53.11	17.17	120	95	
4/17/2009	11:25	3450.70	3.60	nd	73.5	122.1	487650	116	120	1765857	117	1717281	121	1864456	99.3	120.8	22999700	38	37.5	34	2.893	7.74	52.4	5.7	nd	2.642	nd	0.105	4.02	55774	26.59	8.558	138	111	
4/20/2009	9:41	3511.90	3.40	58	72.4	124.0	545020	116	118	2165697	111	2106253	120	2286328	97	123.7	23426500	38	37	35.5	1.312	7.75	49.7	6.25	nd	1.185	nd	0.061	4.09	70151	38.66	16.18	147	124	
4/22/2009	10:58	3561.00	3.40	56	76.9	116.7	589330	105	111	2485647	106	2410305	118	2616949	103.6	115.8	23758300	38	37.5	33.5	2.241	7.84	52.6	5.91	nd	2.254	nd	0.086	4.2	74299	67.9	18.61	164	141	
4/24/2009	10:10	3608.00	3.30	54	76.8	116.9	632220	103	112	2784835	108	2704750	119	2934775	103.1	116.4	24077500	38	38	34	1.848	7.93	53.1	7.14	nd	1.866	nd	0.104	4.79	109912	163.1	27.36	179	154	
4/27/2009	9:23	3628.20	3.40	54	77.2	116.3	650600	100	113.5	2915007	107	2830853	122	3070500	103.8	115.6	24214700	38	38	37	1.747	7.91	52.9	6.82	nd	1.593	nd	0.097	5.03	72892	162.5	26.47	196	164	
4/29/2009	10:40	3677.20	3.52	54	75.5	118.9	695620	91.7	101.8	3228312	107.2	3137298	123.2	3403577	103	116.5	24551200	38.1	38	30	3.347	7.99	54	8.15	nd	3.128	nd	0.156	5.21	80365	165.8	22.11	226	175	
2 micron cartridges																																			
5/1/2009	10:30	3724.30	2.98	57	113.47	79.1	724365	40.4	73.8	3431689	69.3	3329069	67.8	3612541	150.65	79.7	24767950	38	39	37	2.751	7.98	52.6	7.42	nd	2.747	nd	0.0761	4.7	40050	94.35	16.1	240	182	
5/4/2009	9:49	3795.30	2.87	54	111.8	80.3	767010	39	80.6	3732823	71	3611887	84	3923443	144.2	83.2	25093200	38	39.5	37.5	2.817	7.91	52.1	6.51	nd	2.616	nd	0.089	4.64	45663	39.05	13.4	259	198	
5/6/2009	9:28	3842.60	2.75	56	109.9	81.7	795160	37	76.7	3934231	73	3799453	76.3	4125623	143.3	83.7	25310200	38	39	38.5	4.046	7.65	51.1	4.78	nd	3.908	nd	0.079	4.42	47347	48.19	11.87	273	212	
5/8/2009	11:05	3873.90	3.35	57	75.31	119.2	814700	62.9	119.3	4073051	107.3	3929914	117.3	4265009	100.31	119.6	25469970	38	37.5	37	4.519	7.59	49.3	4.75	nd	4.766	nd	0.106	3.72	79808	27.09	7.52	282	221	
5/15/2009	11:22	3938.90	3.25	56	82.2	109.2	867880	92.6	104	4449047	102	4291064	104	4673250	110.6	108.5	25859400	38	38	36.5	3.138	8.09	52.5	9.58	nd	3.008	nd	0.198	7.82(10)	188148	284.7	44	314	254	
5/19/2009	10:52	3991.50	4.45	59	99.9	89.9	908040	nd	92	4727870	79	4561222	93	4972997	133.1	90.2	26156500	38	39	34.5	3.984	8.05	53.1	8.22	nd	3.827	nd	0.198	7.94(10)	145135	160.2	37.65	462	291	
5/20/2009	11:40	4017.20	5.15	57	65.8	136.4	932910	nd	132	4904777	124	4730479	148	5164417	87.8	136.7	26341800	38	38	29.5	3.609	7.87	51.5	6.64	nd	3.482	nd	0.191	5.84	119907	73.69	29.13	477	311	
5/22/2009	9:10	4059.80	4.95	56	70.2	127.9	965450	nd	126	4947559	116	4947619	130	5409299	91.8	130.7	26586500	38	38.5	35.5	2.815	7.83	52	5.79	nd	2.989	nd	0.192	5.21	92111	47.17	25.03	607	327	
5/25/2009	12:08	4133.90	4.65	58	74.8	120.0	1035140	nd	119	5632198	111	5421867	129	5954677	95.3	125.9	27117100	38	38.5	37.5	1.029	7.81	50.8	6.05	nd	1.027	nd	0.109	4.67	109435	40.77	21.54	690	353	
5/27/2009	9:40	4179.20	4.82	56	73.1	122.8	1077550	nd	112	5931291	108	5708012	127	6285804	95.9	125.1	27440700	38	39	38	2.422	7.79	51.1	5.65	nd	2.122	nd	0.096	4.42	82007	45.55	23.36	743	370	
5/29/2009	12:20	4225.90	4.95	57	73.7	121.8	1120860	nd	120	6237992	112	5998854	140	6624154	94.9	126.4	27771400	38	38.5	37.5	3.163	7.82	51.5	6.2	nd	3.078	nd	0.102	4.58	99205	59.38	29.06	871	392	
6/2/2009	11:38	4255.50	5.10	58	68.4	131.2	1148370	nd	124	6433185	120	6183999	136	6836183	90.2	133.0	27976800	38	38.5	38	2.918	7.8	50.7	5.9	nd	2.686	nd	0.089	4.15	76347	52.95	23.26	987	411	
6/3/2009	11:53	4279.70	4.97	57	68.8	130.5	1172770	nd	126	6605256	122	6349032	134	7025195	91.4	131.3	28160800	38	38.5	36	3.191	7.82	52.3	6.13	nd	3.101	nd	0.106	4.1	70656	63.73	23.55	1011	424	
6/5/2009	10:25	4326.00	4.60	58	70.2	127.9	1219000	nd	124	6931949	119	6659167	135	7389010	90	133.3	28509100	38	38.5	37	2.624	7.83	51.1	6.33	nd	2.564	nd	0.129	4.53	78971	70.63	28.34	1063	448	
6/8/2009	10:45	4398.00	2.40	60	71.2	126.1	1270610	nd	122	7303058	115	7002488	132	7793694	93.5	128.3	28900300	38	38	35.5	2.871	7.92	50.3	7	nd	2.566	nd	0.122	4.98	97030	55.39	24.58	1133	474	
10 micron cartridge																																			
6/12/2009	11:30	4490.60	5.95	58	63.5	141.4	1329410	nd	135	7721296	128	7395767	135	8237076	84	142.9	29341600	38	37.5	35.5	3.734	7.88	50.9	6.35	nd	3.511	nd	0.138	4.86	90865	61.65	24.93	1205	507	
6/15/2009	10:58	4561.80	6.10	59	66.1	135.8	1405700	nd	128	8280055	121	7908912	132	8822125	87.4	137.3	29924400	tc	36.5	34	2.231	7.92	50.7	7.65	nd	2.211	nd	0.105	4.68	77861	79.91	18.57	1241	534	
6/17/2009	15:15	4610.20	5.75	63	67.38	133.2	1455336	128.2	138.5	8645985	117.8	8237792	131	9201269	87.84	136.6	30300000	38	36	34	2.147	8.09	50	9.46	nd	2.287	nd	0.207	5.7	183416	243.7	49.47	1273	563	
6/18/2009	11:15	4630.10	6.00	63	65.1	137.9	1475577	124.7	132.9	8795192	125.1	8371853	133.9	9355200	86.82	138.2	30452940	35.5	32	38	1.826	8.05	50.9	9.17	nd	1.669	nd	0.172	5.51	281637	118.4	41.52	1284	576	
6/22/2009	11:00	4725.40	6.23	61	70.6	127.1	1572530	nd	128	9502055	122	9004021	132	10099054	88.8	135.1	31192100	38	34	33	4.032	7.81	49.9	6.15	nd	3.765	nd	0.092	5.29	79952	35.46	15.29	1340	629	
6/24/2009	11:01	4759.80	5.60	59	66.1	135.8	1608480	nd	132	9764834	116	9236528	132	10375466	84.6	141.8	31470500	38	37.5	34.7	2.123	7.87	50.5	6.7	nd	2.075	nd	0.103	4.73	155009	71.49	34.36	1363	643	
6/30/2009	10:35	4846.90	5.60	59	71.1	126.3	1694700	nd	128	10410598	116	9811974	128	11032110	89.4	134.2	32133700	38	35	30	1.819	7.95	51.9	6.99	nd	1.811	nd	0.108	4.86	175366	71.51	43.05	1543	682	
7/3/2009	10:15	4892.00	5.40	59	69.1	129.9	1726000	nd	132	10654380	119	10025533	133	11271899	88.4	135.7	32374600	38	37	35.5	2.919	7.85	50.9	6.05	nd	2.399	nd	0.129	4.72	91692	40.55	24.21	1581	698	
7/7/2009	10:10	4943.00	5.30	59	67.8	132.4	1775950	nd	138	11042147	124	10365179	135	11653292	88.1	136.2	32759100	38	38	36	2.316	7.83	49.5	6.64	nd	2.262	nd	0.099	4.64	92002	65.78	21.19	1629	726	
7/8/2009	11:30	4964.70	5.35	59	71.4	125.7	1797060	nd	128	11200214	115	10507940	131	11811553	92.5	129.7	32919700	38	38	33.5	2.941	7.94	50.4	7.42	nd	2.826	nd	0.1	4.82	93537	103.8	23.46	1646	739	
7/10/2009	10:45	5001.20	5.40	60	67.1	133.8	1832170	nd	133	11462071	117	10743729	134	12073286	88.1	136.2	33185100	38	38	36.5	3.878	7.99	51.5	8.02	nd	3.741	nd	0.132	5.01	283169	176.3	48.43	1674	765	
7/13/2009	10:50	5009.30	5.75	61	71.9	124.8	1839360	nd	137	11514522	125	10792074	127	12126762	95.4	125.8	33239700	38.1	38.4	31.5	2.319	8.01	50.6	8.17	nd	2.265	nd	0.121	5.04	156060	79.01	20.93	1710	774	
7/15/2009	10:32	5052.90	5.65	60	67.3	133.4	1882310	nd	133	11827322	122	11081243	135	12449461	87.7	136.8	33566800	38.2	38.5	37	1.235	8.03	51.8	7.5	nd	1.175	nd	0.131	5.61	102418	62.04	25.42	1735	796	
7/17/2009	10:29	5086.60	5.60	60	68.3	131.4	1916190	nd	132	12074498	120	11308560	134	12705627	88.6	135.4	33826300	38	38	36	1.244	8.02	51.9	7.1	nd	1.206	nd	0.116	5.64	106710	54.57	26.77	1758	809	
7/20/2009	11:15	5143.70	5.60	60	68.9	130.3	1973770	nd	131	12497524	117	11693451	129	13140449	90.1	133.2	34270200	38	37.5	36	1.772	7.92	51.2	6.37	nd	1.617	nd	0.101	5.21	83784	31.36	21.02	1794	828	
7/22/2009	10:42	5186.20	6.05	61	70.7	127.0	2014990	nd	122	12793306	119	11975592	125	13455620	91.4	131.3	34590400	38	38.5	34	1.282	7.96	51.2	7.09	nd	1.256	nd	0.103	5.25	154292	51.16	31.64	1823	841	
7/24/2009	11:00	5224.80	6.25	60	74.6	120.3	2052500	nd	115	13059159	112	12232384	118	13742790	95.2	126.1	34882300	38	38.5	30.5	1.458	8.08	51.7	7.75	nd	1.442	nd	0.149	5.78	132665	58.77	33.26	1866	854	
7/27/2009	10:55	5285.50	5.65	61	70.5	127.3	2112670	nd	122	13481361	116	12642587	126	14201257	91.8	130.7	35348300	38	38	33	1.126	8.15	52.8	7.93	nd	1.097	nd	0.133	5.56	106784	41.78	26.83	1917	879	
7/30/2009	10:02	5347.60	5.40	61	68.9	130.3	2174020	nd	119	13897858	113	13054774	128	14666770	90.6	132.5	35825800	38	38.5	36	1.156	8.01	51.1	6.96	nd	1.113	nd	0.161	5.89	93031	40.71	22.47	1951	899	
7/31/2009	9:55	5371.40	5.40	61	68.4	131.2	2198100	nd	126	14061263	118	13215295	133	14850060	90.8	132.2	36012700	38	38	35.5	1.093	8.02	50.9	7.08	nd	1.034	nd	0.151	5.61	96952	37.79	22.08	1963	911	
8/5/2009	9:47	5443.10	5.90	60	65.3	137.5	2271320	nd	136	14589560	129	13702459	139	15407925	85.7	140.0	36582700	40	39	37.5	0.907	7.95	50.4	6.13	nd	0.917	nd	0.096	4.77	102043	26.5	20.77	2030	943	
8/6/2009	10:20	5455.60	5.90	60	66.8	134.4	2284600	nd	133	14687780	122	13790607	134	15510034	88.6	135.4	36685700	40	39	35	0.853	7.91	50.7	5.72	nd	0.831	nd	0.085	4.48	89945	20.72	1612	2042	947	
8/7/2009	14:07	5483.30	5.55	61	73.7	121.8	2310990	nd	118	14887458	110	13966761	127	15709734	96.3	124.6	36891000	40	40	38	1.342	7.93	49.7	6.31	nd	1.276	nd	0.068	3.92	72915	19.55	14.84	2056	954	
8/20/2009	10:55	5512.40	4.70	59	82	109.5	2327390	nd	115	15064820	110	14148556	121	15911724	99.5	120.6	37096200	nd	40	32	1.077	8.06	52.4	7.37	nd	1.015	nd	0.136	4.74	93922	110.8	47.92	2211	971	
8/21/2009	9:32	5535.40	4.55	61	77.9	115.2	2346070	nd	124	15222824	109	14293288	119	16072030	100.5	119.4	37259600	nd	33	31.5	1.159	8.01	50.1	7.07	nd	1.045	nd	0.116	4.6	53381	25.16	17.6	2227	977	
8/24/2009	9:50	5607.30	4.05	64	68.34	131.4	2415887	nd	125.8	15740588	110.8	14760709	131.6	16605754	92.43	129.8	37798350	nd	39	35.5	1.076	8.11	51.9	7.44	nd	0.611	nd	0.138	5.53	51511	40.93	20.91	2262	nm	alarm flashing
9/21/2009	10:19	5935.00	5.40	61	90.6	99.1	2602230	nd	104	17103938	92	15936401	114	18012283	110.2	108.9	39220900	41.5	28	25	1.478	8.17	52.7	7.82	nd	1.418	nd	0.154	5.1	105813	93.73	32.93	2988	21	
9/22/2009	7:25	5956.40	5.10	58	78.4	114.5	2621900	nd	116	17260487	102	16068910	122	18161100	101	118.8	39372600	42	38	30.5	1.339	8.13	51.6	7.42	nd	1.222	nd	0.149	4.61	93289	71.41	33.5	3015	28	
9/25/2009	9:29	6029.70	4.65	60	78.8	113.9	2685490	nd	120	17769047	101	16490684	111	18629802	114.3	105.0	39851500	42	29	27	1.163	8.12	50.9	7.73	nd	1.127	nd	0.193	5.13	101983	68.16	25.59	3069	47	

Z-BOX DATA														
Date	Time	TMP (PDI)	Flow (gpm)	Temp (F)	Volume since last drain (gal)	Volume for this day (gal)	Yesterday's production (gal)	Filtrate Turbidity (NTU)	Raw Water Turbidity (NTU)	Filtrate SDI	Filtrate Fluor (PE)	Filtrate Fluor (Chloro A)	Raw Water Fluor (PE)	Raw Water Fluor (Chloro A)
1/16/2009	12:20	-3.7	140	60	5174	104032	186028	0.027	1.758	2.5	1.039	25.76	0.643	29.72
1/21/2008	11:03	-4.1	139	56	2560	91320	184017	0.027	1.554	2.7	0.789	13.34	0.465	29.58
1/22/2009	10:38	-4.3	140.5	55	6023	88406	184362	0.027	1.114	2.6	0.64	13.85	0.556	32.94
1/26/2008	14:32	-3.9	142	53	6159	9418	169003	0.028	2.01	2.1	0.763	16.83	0.595	28.7
1/27/2009	10:45	-4	142	52	6308	90858	161673	0.028	1.881	1.8	0.705	17.13	0.684	27.71
1/30/2009	11:37	-4	142	58	4211	97619	188527	0.029	1.989	2.1	0.822	12.07	0.517	31.79
2/2/2009	10:35	-4.1	142	58	5954	89790	187268	0.035	1.289	2.1	0.608	16.99	0.669	38.82
2/3/2009	11:40	-4.1	142	57	4033	97367	187905	0.035	1.041	2.2	1.258	21.19	0.738	38.56
2/4/2009	11:49	-4.3	141	57	690	98173	186927	0.034	1.032	2.4	0.59	13.57	0.579	27.58
2/5/2009	11:34	-4.5	140	52	601	95727	186832	0.036	1.797	2.3	0.616	20.06	0.679	55
2/6/2009	11:19	-5.1	142	54	6261	93631	185603	0.034	3.18	2.4	0.556	17.59	0.638	40.3
2/9/2009	13.03	-5.7	142	52	1022	108602	188658	0.029	2.217	2	0.69	17.03	0.659	31.21
2/10/2009	11.16	-5.9	141	53	4176	94598	188268	0.026	4.93	1.7	0.778	22.97	0.904	34.21
2/11/2009	11:18	-4	142	52	498	97635	158022	0.024	2.949	1.8	0.849	13.66	0.747	22.52
2/20/2009	11:13	-4.1	142	53	2816	93959	187575	0.03	5.005	2.2	0.784	9.451	0.681	28.81
2/23/2009	11:30	-4.2	142	54	259	95788	187634	0.032	2.841	2.8	0.552	8.579	0.419	21.88
2/24/2009	11:14	-4.2	142	54	738	93047	187684	0.029	3.142	2.6	0.43	7.117	0.429	18.51
2/25/2009	11:09	-4.3	141	54	2983	92956	186743	0.03	6.57	2.8	0.477	10.21	0.609	32.13
2/26/2009	11:58	-4.3	141	56	5753	99486	187235	0.031	3.664	2.6	0.302	6.816	0.496	15.96
2/27/2009	11:32	-4.3	141	54	4353	95950	186542	0.03	3.406	2.5	0.622	6.955	0.492	17.01
3/2/2009	11:58	-4.5	140	52	243	98920	187213	0.03	2.124	2.4	0.44	18.06	0.459	36.5
3/3/2009	10:55	-4.6	140	54	208	90274	186401	0.029	2.401	2.4	0.907	12.83	0.425	30.27
3/4/2009	11:41	-4.8	142	54	1145	96145	186030	0.03	3.244	2.7	0.865	10.43	0.461	39.53
3/5/2009	10:39	-5.1	141	53	2122	88451	186475	0.039	2.775	2.7	0.519	19.82	0.51	27.64
3/6/2009	12:28	-5.5	141	54	4389	102245	185922	0.038	3.497	2.7	0.916	8.575	0.51	22.91
3/9/2009	11:57	-6.6	136	53	5946	78512	182813	0.031	3.818	3.1	0.456	8.96	0.54	59.14
3/10/2009	13:19	-7.4	133	54	2831	96184	170161	0.032	3.402	3.3	0.664	10.63	0.543	45.07
3/11/2009	10.58	-8.1	130	52	2086	77346	176060	0.032	2.361	3.1	0.512	10.36	0.505	52.59
3/12/2009	11:40	-9.1	126	53	6553	80536	172451	0.031	2.562	3.6	0.377	11.91	0.462	58.05
3/16/2009	11:30	-7.8	141	55	5588	96884	191252	0.031	1.145	3.9	0.452	10.01	0.375	46.9
3/20/2009	11:07	-4.3	141	53	1425	92916	100184	0.031	2.783	3.4	0.437	14.97	0.471	51.92
3/23/2009	11:40	-4.9	142	52	5298	89501	188162	0.031	2.706	3.1	0.354	8.707	0.644	34.3
3/25/2009	10:55	-4.7	142.8	52	1964	83808	110921	0.031	1.703	2.6	0.54	18.03	0.641	36.18
3/26/2009	10:54	-4.8	142	54	6344	83943	188677	0.034	3.212	2.8	0.877	13.15	0.654	45.07
3/27/2009	10:59	-4.9	142	57	4498	84074	188987	0.031	1.445	2.6	0.873	11.9	0.441	72.05
3/31/2009	11:36	-5.8	139	55	4936	87268	171114	0.032	1.012	3.5	0.867	20.76	0.42	51.44
4/2/2009	11:05	-4.4	141.5	55	6270	84801	148948	0.031	1.064	2.8	0.782	9.589	0.497	66.13
4/3/2009	10:59	-4.3	141.5	54	9561	83138	187398	0.029	3.601	2.5	0.722	11.68	0.593	48.54
4/7/2009	10:50	-4.4	142	55	5993	83805	140313	0.03	1.785	2.2	0.564	12.46	0.514	44.74
4/8/2009	11:04	-4.4	141	54	3606	83820	188526	0.028	3.032	2.3	0.641	20.67	0.534	42.62
4/9/2009	11:30	-4.6	141	54	2785	87368	186592	0.03	2.236	2.1	0.825	21.77	0.498	28.01

Z-BOX DATA														
Date	Time	TMP (PDI)	Flow (gpm)	Temp (F)	Volume since last drain (gal)	Volume for this day (gal)	Yesterday's production (gal)	Filtrate Turbidity (NTU)	Raw Water Turbidity (NTU)	Filtrate SDI	Filtrate Fluor (PE)	Filtrate Fluor (Chloro A)	Raw Water Fluor (PE)	Raw Water Fluor (Chloro A)
4/10/2009	11:27	-4.7	141	54	4699	86798	186789	0.03	2.375	2.3	0.643	10.69	0.517	31.8
4/14/2009	11:54	-4.9	142	54	482	90711	147897	0.029	2.279	2.6	0.626	20.75	0.576	47.38
4/16/2009	11:11	-5.3	141	53	1052	84307	170110	0.027	2.138	2.4	0.613	12.39	0.488	30.6
4/17/2009	11:27	-5.5	141	52	5212	86538	186323	0.032	2.139	1.9	0.716	17.38	0.443	20.04
4/21/2009	10:10	-4.3	142	54	3996	83760	134755	0.029	2.664	2.3	0.648	13	0.733	61.59
4/22/2009	10:53	-4.4	142	54	6449	82837	194399	0.03	2.003	2.2	1.076	13.84	0.508	70.38
4/23/2009	11:30	-4.5	142	54	703	86913	187842	0.031	1.664	3	0.587	11.59	0.642	100.6
4/24/2009	10:12	-4.7	141	53	6631	77332	186727	0.031	1.776	3.7	0.791	24.54	0.435	137.4
4/29/2009	10:49	-6.4	139	54	6626	81002	168539	0.031	1.614	4.1	0.613	21.26	0.649	103.3
4/30/2009	11:49	-7.2	136	54	2622	83888	184074	0.029	1.749	4.3	0.578	32.91	0.518	55.6
5/1/2009	11:48	-4.5	141	54	5748	89837	148728	0.03	2.614	3.9	0.847	21	0.551	69.34
5/5/2009	10:46	-4.7	141	54	5885	83436	143649	0.03	2.368	3.3	0.642	25.23	0.663	34.59
5/6/2009	9:24	-4.8	141	52	3865	70270	188922	0.03	2.823	3.2	0.628	17.15	0.632	50.23
5/7/2009	11:05	-4.9	140	53	5508	83643	185813	0.03	3.956	2.6	0.572	19.5	0.662	33.77
5/8/2009	12:55	-4.3	126.6	57	4968	90689	176910	0.03	3.898	2.6	0.698	14.77	0.821	24.58
5/12/2009	10:55	-6.3	128	54	4455	76651	112903	0.03	1.891	4.2	0.559	12.12	0.526	186.5
5/13/2009	10:31	-8.7	100	57	6309	59137	157932	0.029	2.362	3.8	0.893	16.6	0.613	79.68
5/18/2009	11:37	-9.7	126	60	4942	81111	177635	0.034	1.216	2.7	0.531	11.31	0.453	210.3
5/20/2009	11:27	-5.9	132	56	2453	80406	99927	0.032	2.429	3.7	0.432	11.16	0.583	60.11
5/21/2009	11:32	-4.1	118	57	1257	73356	164239	0.032	2.306	2.3	0.707	12.55	0.608	31.22
5/22/2009	11:39	-4.9	142	55	505	88488	174267	0.032	2.223	2.2	0.62	12.47	0.573	47.66
5/25/2009	11:51	-4.6	131	57	5808	67372	152327	0.031	1.391	2.1	1.121	8.355	0.602	52.04
5/28/2009	10:38	-4.9	140	56	2953	78900	66274	0.032	1.757	2.1	1.127	13.32	0.649	96.05
5/29/2009	12:20	-3.8	110	56	4623	73305	165558	0.048	2.335	1.7	0.994	16.24	0.621	75.7
6/1/2009	11:39	-3.9	110	55	2255	69329	148129	0.045	2.111	1.7	0.642	20.09	0.653	40.35
6/2/2009	11:14	-4.1	110	55	2288	66865	147544	0.045	1.905	1.8	1.077	20.8	0.733	52.21
6/3/2009	11:13	-4.3	110	55	4792	66638	147880	0.046	2.151	2.2	0.898	13.82	0.627	55.71
6/4/2009	9:54	-4.5	109	58	4867	57808	147421	0.047	2.012	2.4	0.871	16.18	0.701	62.51
6/5/2009	10:16	-4.8	108	57	1082	59970	145745	0.034	2.237	2.5	0.847	15.96	0.756	64.4
6/8/2009	10:44	-6.3	104	60	5174	60912	142118	0.032	1.713	2.6	0.727	19.55	0.537	91.94
6/9/2009	11:12	-7	102	58	1697	62225	140278	0.032	3.155	2.5	0.833	20.48	0.721	101.5
6/10/2009	10:54	-7.1	95	58	5349	57294	133914	0.031	2.663	2.3	0.794	18.23	0.62	49.03
6/11/2009	10:16	-3.4	104	58	680	67656	113800	0.031	1.693	2.3	0.586	14.47	0.578	70.97
6/12/2009	11:16	-3.6	104	58	1547	63268	140391	0.041	2.244	2.1	1.081	18.21	0.586	53.82
6/15/2009	11:10	-3.8	104	59	4948	62846	139834	0.063	1.643	2.5	0.982	20.36	0.547	95.93
6/16/2009	15:25	-4.1	105.75	60	3176.5	91480	141056	0.047	2.153	3.2	0.356	4.912	0.552	104.4
6/17/2009	15:00	-4.6	104.8	62	3331	88422	141681	0.048	1.691	3.3	1.424	10.73	0.372	122.9
6/18/2009	11:10	-5.1	103	60	1751	64854	140684	0.048	1.272	3.4	0.317	8.19	0.596	99.2
6/22/2009	10:50	-9.2	92	58	5687	55272	128517	0.031	2.615	2.5	0.684	20.48	0.802	36.45
6/24/2009	10:45	-4.1	123	57	3229	69443	92243	0.034	2.083	3.2	0.782	11.87	0.642	59.75
6/25/2009	11:16	-4.5	122	58	3566	73046	161591	0.033	1.587	2.3	0.853	28.12	0.579	68.1

Z-BOX DATA														
Date	Time	TMP (PDI)	Flow (gpm)	Temp (F)	Volume since last drain (gal)	Volume for this day (gal)	Yesterday's production (gal)	Filtrate Turbidity (NTU)	Raw Water Turbidity (NTU)	Filtrate SDI	Filtrate Fluor (PE)	Filtrate Fluor (Chloro A)	Raw Water Fluor (PE)	Raw Water Fluor (Chloro A)
6/26/2009	15:56	-4.6	122	61	5368	104377	161864	0.037	3.023	2.2	0.582	13.52	0.64	85.18
6/29/2009	11:07	-5.9	118	58	5391	68594	157054	0.034	1.493	2.4	0.838	15.67	0.596	52.99
6/30/2009	11:01	-6.4	116	58	838	67834	155543	0.034	1.346	2.4	0.76	24.7	0.721	68.38
7/1/2009	8:41	-7	115	56	1240	52878	153858	0.034	2.003	2	0.642	14.94	0.741	60.61
7/3/2009	11:27	-2.8	50	58	2558	32022	100222	0.035	1.871	1.8	0.634	10.4	0.716	44.74
7/6/2009	9:45	-3	50	57	1611	26997	69395	0.032	1.577	1.9	0.723	12.38	0.848	46.2
7/7/2009	10:38	-2.9	50	59	1017	29399	69545	0.034	1.703	2.2	0.698	14.31	0.64	43.63
7/8/2009	9:51	-3	50	59	1862	27098	69087	0.035	1.983	2.6	0.488	5.553	0.633	71.14
7/9/2009	9:00	-3.1	50	58	2285	24492	68970	0.034	1.747	2.8	0.525	8.367	0.601	68.72
7/10/2009	10:18	-3.1	50	60	1882	28150	68473	0.035	2.339	2.6	0.559	7.519	0.595	103.9
7/13/2009	11:16	-3.3	50	61	4813	30825	67942	0.035	1.495	2.3	0.546	8.632	0.603	60.29
7/14/2009	9:34	-3.3	49	61	1611	25721	67838	0.035	1.227	2.3	0.561	7.835	0.626	47.13
7/15/2009	12:01	-3.6	49	60	3528	32548	67626	0.035	0.918	2.3	0.54	8.226	0.572	38.41
7/16/2009	10:37	-3.8	50	60	690	28275	67367	0.035	0.754	2.5	0.607	7.782	0.686	57.24
7/17/2009	10:18	-4.3	50	60	3092	28546	68108	0.035	0.822	2.2	0.562	12.17	0.598	44.85
7/20/2009	10:54	-2.1	52	60	1823	31416	72376	0.038	1.089	2.1	0.573	8.255	0.627	25.63
7/21/2009	9:51	-2.2	52	61	4973	28383	72144	0.035	1.189	2	0.566	7.601	0.759	37.42
7/22/2009	9:44	-2.1	52	61	3612	27664	71873	0.033	0.996	1.9	0.523	6.918	0.587	40.61
7/24/2009	10:15	-2.3	51	60	3182	23840	70803	0.034	1.008	2.2	0.578	8.728	0.58	43.77
7/27/2009	10:27	-2.7	55	62	1588	31383	61550	0.035	0.677	2.5	0.562	8.726	0.628	32.8
7/28/2009	9:51	-2.8	55	62	2522	29373	75498	0.034	0.828	2.4	0.616	11.43	0.707	45.4
7/29/2009	10:23	-3	55	61	451	31188	75245	0.034	0.954	2.2	0.539	9.37	0.572	42.87
7/30/2009	10:46	-3.2	55	61	4972	32601	75657	0.034	0.689	1.9	0.555	8.681	0.591	27.67
7/31/2009	10:57	-3.5	56	61	2885	33575	76091	0.035	0.566	1.7	0.623	10.86	0.821	36.04
8/3/2009	10:47	-4.2	55	60	1348	32778	76491	0.035	0.554	1.9	0.643	8.722	0.602	57.84
8/4/2009	8:43	-4.5	55	60	5225	26178	76425	0.034	0.579	1.8	0.607	9.711	0.622	44.77
8/5/2009	10:42	-4.7	55	60	1662	32386	75953	0.035	0.499	1.9	0.608	7.073	0.623	21.12
8/6/2009	11:06	-4.9	55	60	6491	33644	76106	0.037	0.545	1.6	0.545	7.81	0.583	21.03
8/7/2009	15:36	-4.7	55	61	4503	48124	75852	0.037	0.847	1.4	0.633	9.094	0.767	19.8
8/10/2009	11:09	-5.1	55	60	392	33422	76022	0.038	0.547	1.7	0.628	7.707	0.629	43.41
8/13/2009	10:34	-1.8	51	59	1031	29356	35386	0.036	0.504	1.9	0.728	10.88	0.747	41.59
8/14/2009	10:10	-1.9	50	59	3846	28201	69887	0.036	0.498	2	0.665	11.92	0.745	34.76
8/18/2009	10:11	-2.1	50	57	3812	28001	49351	0.035	0.465	1.6	0.67	11.77	0.747	33.22
8/19/2009	10:21	-2.1	50	57	903	28176	69417	0.034	0.347	1.6	0.832	15.54	0.83	37.41
8/20/2009	10:38	-2.1	50	59	4817	29081	68920	0.035	0.454	1.6	0.735	12.18	0.791	25.51
8/21/2009	10:59	-2.1	50	61	1744	29841	68667	0.044	0.422	1.4	0.545	7.897	0.69	26.75
8/24/2009	11:25	-2.2	49.1	61	4702	32103	67919	0.04	0.359	1.6	0.817	13.52	0.938	21.31
9/1/2009	9:25	-2.9	48.1	62	3637	25821	65898	0.037	0.273	1.8	0.656	8.173	0.696	16.17
9/2/2009	11:30	-3	48	64	2766	31478	65931	0.036	0.229	1.8	0.552	6.581	0.651	10.49
10/13/2009	11:54	-1.2	45	60	3350	29716	34551	0.041	0.829	1.7	0.642	13.29	0.66	78
10/14/2009	11:58	-1.2	45	60	492	29844	62891	0.037	1.508	1.4	0.685	12.73	0.811	63.21

Z-BOX DATA														
Date	Time	TMP (PDI)	Flow (gpm)	Temp (F)	Volume since last drain (gal)	Volume for this day (gal)	Yesterday's production (gal)	Filtrate Turbidity (NTU)	Raw Water Turbidity (NTU)	Filtrate SDI	Filtrate Fluor (PE)	Filtrate Fluor (Chloro A)	Raw Water Fluor (PE)	Raw Water Fluor (Chloro A)
10/15/2009	10:45	-1.2	45	62	2749	28750	62661	0.041	1.352	1.3	0.654	13.85	0.733	101.1
10/16/2009	12:48	-1.2	45	63	2133	31623	62366	0.04	1.057	1.2	0.758	13.77	0.766	53.78
10/21/2009	9:07	-1.3	44	58	2056	21744	34526	0.038	1.83	1	0.792	15.68	0.9	80.61
10/22/2009	11:38	-1.3	45	62	2567	13696	61252	0.039	0.826	1.1	0.716	10.5	0.75	36.82
10/27/2009	11:20	-2.2	60	62	5761	28887	61116	0.054	1.56	1.7	0.68	10.63	0.778	204.4
10/29/2009	12:27	-1.8	42	59	2506	39888	82969	0.049	0.589	1.2	0.73	12.31	0.758	35.4
10/30/2009	11:25	-1.8	42	60	4833	25753	69139	0.058	0.393	1.2	0.758	13.46	0.708	41.08
11/2/2009	10:24	-1.9	41	61	4373	25378	57160	0.058	0.492	1.2	0.717	11.22	0.761	41.58
11/4/2009	11:57	-1.9	41	60	2597	28946	56615	0.058	0.623	1.4	0.804	14.43	0.902	64.62
11/6/2009	1:12	-3	59	60	5302	35578	58115	0.052	0.457	1.8	0.73	12.03	0.733	36.9
11/9/2009	11:42	-3.7	60	60	2696	42117	82853	0.051	0.754	1.7	0.743	11.71	0.792	53.49
11/12/2009	12:36	-2.9	45	60	6232	44679	45261	0.052	0.548	1.3	0.753	12.58	0.766	54.8
11/13/2009	11:01	-4.3	61	60	4029	36106	78927	0.04	1.028	1.7	0.723	13.35	0.795	49.69
11/16/2009	11:36	-5.2	59	60	4215	41908	84031	0.037	0.567	1.1	0.723	11.28	0.784	45
11/18/2009	11:45	-5.5	57	59	3836	39669	78765	0.037	0.598	1.3	0.729	12.06	0.714	51.92
11/20/2009	12:00	-3.7	60	59	4408	42290	81222	0.047	1.006	1.7	0.666	10.76	0.726	46.12
11/23/2009	11:55	-4.4	59	60	4184	41620	81333	0.048	0.933	1.5	0.736	12.12	0.748	54.77
11/25/2009	11:42	-4.7	58	64	6212	40371	80501	0.048	0.689	1.3	0.605	10.39	0.671	42.68

14.0 Quarterly Reports

Quarterly Technical Progress Report
Covering Period April 2, 2007 to June 31, 2007
Date of Report July 25, 2007

Agreement Number:	4600007440
DWR ID Number:	n/a
Project Title:	Optimizing Seawater Reverse Osmosis for Affordable Desalination
Recipient Organization:	Affordable Desalination Collaboration 2419 E. Harbor Blvd, #173 Ventura, CA 93001
Partners:	See attached membership list.
Contact Person:	John MacHarg 2419 E. Harbor Blvd, #173 Ventura, CA 93001 Tel: 650-283-7976 Fax: 805-658-8060 e-mail: jmacharg@affordabledesal.com
Date Submitted:	7-20-07

_____
Signed, Reviewed by designated representative

1. **Project Objective:** The ADC's objectives are to demonstrate affordable, reliable and environmentally responsible reverse osmosis desalination technologies and to provide a platform by which cutting edge technologies can be tested and measured for their ability to reduce the overall cost of the SWRO treatment process.

2. **Project Description / Background:** A key challenge facing the seawater desalination industry today is to develop a new generation of reverse osmosis (RO) plants that deliver high-quality, fresh water at a reduced economic and environmental cost. The key to achieving these goals is to address the most expensive and environmentally taxing component of operating a desalination system: energy.

   The Affordable Desalination Collaboration (ADC) was formed in 2004 to fund and execute the first part (ADC I) of what is hoped to be a multiple phase Affordable Desalination Demonstration Project. ADC I built and is operating a demonstration plant at the United States Navy's Seawater Desalination Test Facility in Pt. Hueneme, California. The plant utilizes a combination of proven technologies developed primarily in the U.S. and California to demonstrate that

seawater desalination can be optimized to make it technically and economically viable. To date, ADC I has achieved remarkable results by desalinating seawater at energy levels between 6.0-6.9 kWh/kgal (1960-2250 kWh/acre-ft). On average, these numbers make the power for desalination comparable to the power required for the State Water and the Colorado River Aqueduct projects and they are approximately 35% lower than experts have been projecting for seawater desalination. For the approximate 100 mgd of proposed seawater desalination projects in Southern California alone, this 35% savings will equate to approximately 140,000 Mega Watt hours in energy savings per year.

This second phase (ADC II) will pursue the following demonstration, and development tasks.

a. Test and demonstrate additional manufacturers' membranes through a similar protocol as phase I, where we have used DOW membranes exclusively. Demonstrating additional manufactures will validate our original results and show that they can be achieved with several manufactures' membranes. It will also allow us to provide a "head to head" comparison matrix of performance from four leading membrane manufacturers (DOW, Hydranautics, Toray, Koch) using natural seawater and a full-scale eight inch diameter x 7-element membrane array.
b. Test and demonstrate DOW's next generation "hybrid-membrane". Their new concept includes internally staging membranes of different performance down a single 7-elemenet pressure vessel.
   Dow indicates that these new membranes will provide improvements in energy consumption over their latest "low energy" membranes and the hybrid-membrane should also produce better water quality than their existing low energy membrane if used by itself.
c. Develop and demonstrate new process designs that are possible as a result of the isobaric energy recovery technologies. As a natural result of the pressure exchanger (PX) technology in particular, there are new kinds of flow schemes that can improve the performance of higher recovery seawater and brackish water systems. We will use the ADC pilot system to test and demonstrate these new flow schemes in order to push the recoveries above 50%, while still maintaining good water quality and low energy performance.
d. Test and demonstrate Zenon ultra-filtration technology ahead of our ADC pilot system. Although pre-filtration is not necessarily an energy issue, adding this equipment to our system will allow us to run more reliably through a wider range of feed water qualities. As a bonus to that reliability we will also gain additional information about how Zenon's ultra-filtration system performs on Southern California natural seawater. This data should build on and compliment the other pre-filtration studies that are taking place in the region.

The ADC is a group of leading government agencies, municipalities, RO manufacturers, consultants and professionals partnering together to help reduce the costs associated with desalination.

- Start Date of Contract: April 2, 2007
- End Date of Contract: December 22, 2008

3. Progress and Status:

The April and May were mostly spent reconnecting and commissioning the ADC system after it had been re-located to Collier County, Florida. This process included reconnecting the piping and electrical connections, minor repairs, re-loading the media filters, and testing and commissioning all of the electrical, logic, mechanical and plumbing systems.

On May 29th the Toray membranes were loaded and the system performed according to specification. The membrane ripening period commenced at this point. That same week we held an ADC kick off meeting. There were approximately 14 attendees representing 12 ADC members. The major purpose of this meeting was to review and edit the test protocol.

From May 29th through July 10th we completed the ripening and 12 point flux and recovery regime for the Toray membrane set. The table below shows a summary of the results from the 12 points:

Summary of Results Toray Membrane TM800-400 12 Point Flux and Recovery

Recovery %	Flux gfd	RO Process kWh/m3 (kWh/kgal)	Permeate mg/l TDS	Permeate Boron mg/l	Total Treatment Costs $/kgal
42.5%	6.00	1.71 (6.46)	229.30	0.91	$ 2.61
47.0%	5.98	1.77 (6.71)	218.20	0.88	$ 2.56
50.1%	5.98	1.85 (7.01)	237.90	0.95	$ 2.51
41.8%	7.47	1.82 (6.88)	178.50	0.80	$ 2.57
45.8%	7.47	1.87 (7.08)	191.10	0.81	$ 2.52
49.4%	7.42	1.92 (7.25)	206.70	0.86	$ 2.46
43.3%	8.91	1.95 (7.38)	146.90	0.67	$ 2.56
45.9%	8.97	1.93 (7.30)	160.90	0.74	$ 2.43
49.7%	8.97	1.98 (7.48)	185.40	TBD	$ 2.43
43.4%	9.91	1.98 (7.51)	138.80	TBD	$ 2.55
46.0%	9.98	2.01 (7.60)	145.80	TBD	$ 2.49
50.3%	9.93	2.06 (7.82)	165.80	TBD	$ 2.43

The "most affordable point" from the data above as projected by our net present value model was 9 gfd @ 50% recovery and the projected cost of water was $792/acre-ft (2.43/kgal). We expect to be completed with the final 2 week demonstration of this point by August 3rd and will then proceed with the Koch membrane test. The complete data set and NPV analysis are also attached.

The Zenon advanced filtration system is scheduled to be installed in September-07. This package is currently being manufactured at the GE factory. We have a signed membership agreement with Zenon-GE to participate in and demonstrate their advanced filtration system. Installing the system in September will give us sufficient time to gain at least 1 years data and optimization of their system before this DWR contract is complete. We are currently operating with the original media filtration and producing good quality RO feed water at less than 5 SDI.

4. **Percent Complete of Total Project:** 10%

5. **Deliverables:**

Trade Show/Conference/Publication	Date(s)	Author(s)	Presenter
IDA World Conference, Gran Canaria, ADC II Update	October 21-26, 2007	Stephen Dundorf, Thomas F. Seacord, John MacHarg	Stephen Dundorf
AMTA 2007 Annual Conference, Las Vegas, ADC I 10 mgd Application	July 23-27, 2007	Bradley Sessions, Tom Seacord, P.E.	Tom Seacord
AWWA Membrane Technology Conference, Tampa Florida, Collier County results	March 18-21, 2007	Brandon Yallaly, P.E., Tom Seacord, P.E., Steve Messner	Brandon Yallaly

6. **Expenditures:** See attached statements and budgets.

7. **Schedule Status:** Installation and start up of the equipment proceeded smoothly, but the process required approximately 4 weeks more time than originally budgeted. Fortunately the testing of each membrane set is proceeding more rapidly and we expect to make up the time and finish up the second Koch membrane test by early September according to schedule. Installation of the Zenon system is also behind the original schedule but is planned to be completed by mid to late September. This will leave us more than adequate time to achieve 1 year of operation before the test is complete. Attached is a current schedule.

8. **Plans for Next Quarter:** Q3-07 will see the completion of the Toray membrane test, and approximately 80% completion of the Koch membrane test according to our original schedule.

9. **Attachments:** Please see attached papers and publications section.

All quarterly reports should be publicly disclosable and not contain confidential, proprietary or business sensitive information.

Microsoft Excel Document Formatting

Agreement Number	Starting Date	Completion Date	Quarter - Year	Report Number	PERCENT OF			
4600007440	4/2/07	12/31/07	Q2-2007	JPM-72507				
GRANTEE AGENCY NAME Affordable Desalination Collaboration		% Time Elapsed 10%	Total Grant Funds used $ 70,680.4	Grant funds this Quarter $ 70,680.41				
Name of Project Optimizing Seawater Reverse Osmosis for Affordable Desalination								

TASKS	YEAR	2006	2007				2008 ...	Project	Task Complete Last Report	Task Complete This Report	Project Complete
	MONTH	Qtr 4	Qtr 1	Qtr 2	Qtr 3	Qtr 4	Qtr 1				
Task 1:			0%	5%							
Zenon 1000 Pilot Demonstration								5%	0%	5%	5%
Task 2:			0%	80%	20%			80%	0%	80%	80%
TorayTM800C low energy membrane											
Task 3:			0%		100%						
Koch low energy membrane demonstration											
Task 4:			0%			80%	20%				
Hydranautics SW5 low energy membrane											
Task 5:			0%				80%				
DOW Hybrid Membrane Demonstration											
Task 6:			0%								
Unbalanced PX high recovery testing											
Task 7:			0%								
Interstage-PX hybrid high recovery testing											
Show Progress by	**Scheduled =**							100			
Use of Bar Chart	**Completed =**										

Rev 7-25-07

Statements and Budgets

Schedule

Table G-2 ADC Detailed Project Schedule.

ID	Task Name	Duration	Start	Finish	Estimated Cost
1	Agreement development	90 days	Tue 8/1/06	Mon 12/4/06	
2	Final aggrement signed	5 days	Fri 3/23/07	Thu 3/29/07	
3	Project begins	1 day	Mon 4/2/07	Mon 4/2/07	
4	**Zenon 1000 Pilot Demonstration**	**417 days**	**Wed 4/4/07**	**Thu 11/6/08**	**$183,787.00**
5	Install and test Zenon System	18 days	Wed 4/4/07	Fri 4/27/07	
6	Operate and monitor Zenon 1000 membrane pilot system	399 days	Mon 4/30/07	Thu 11/6/08	
7	Complete Zenon testing	1 day	Thu 11/6/08	Thu 11/6/08	
8	**TorayTM800C low energy membrane demonstration**	**51 days**	**Mon 4/30/07**	**Mon 7/9/07**	**$272,413.00**
9	Install Toray TM800C Membranes	2 days	Mon 4/30/07	Tue 5/1/07	
10	TM800C Ripening period	15 days	Wed 5/2/07	Tue 5/22/07	
11	TM800C 9 flux and recovery points	18 days	Wed 5/23/07	Fri 6/15/07	
12	TM800C Most affordable point	15 days	Mon 6/18/07	Fri 7/6/07	
13	Complete Toray TM800C testing	1 day	Mon 7/9/07	Mon 7/9/07	
14	Submit project update report to DWR	5 days	Mon 7/9/07	Fri 7/13/07	
15	**Koch low energy membrane demonstration**	**68 days**	**Tue 7/10/07**	**Thu 10/11/07**	**$363,218.00**
16	Install hydranautics SWC5 membranes	2 days	Tue 7/10/07	Wed 7/11/07	
17	SW5 Ripening period	20 days	Thu 7/12/07	Wed 8/8/07	
18	SW5 9 flux and recovery points	25 days	Thu 8/9/07	Wed 9/12/07	
19	SW5 Most affordable point	20 days	Thu 9/13/07	Wed 10/10/07	
20	Complete Hydranautics SW5 testing	1 day	Thu 10/11/07	Thu 10/11/07	
21	Submit project update report to DWR	5 days	Thu 10/11/07	Wed 10/17/07	
22	Innovative PX flow schemes work shop	2 days	Thu 10/11/07	Fri 10/12/07	
23	**Hydranautics SW5 low energy membrane demonstration**	**68 days**	**Fri 10/12/07**	**Tue 1/15/08**	**$363,218.00**
24	Install Koch membranes	2 days	Fri 10/12/07	Mon 10/15/07	
25	Koch Ripening period	20 days	Tue 10/16/07	Mon 11/12/07	
26	Koch 9 flux and recovery points	25 days	Tue 11/13/07	Mon 12/17/07	
27	Koch Most affordable point	20 days	Tue 12/18/07	Mon 1/14/08	
28	Complete Koch testing	1 day	Tue 1/15/08	Tue 1/15/08	
29	Submit project update report to DWR	5 days	Tue 1/15/08	Mon 1/21/08	
30	Member workshop and progress report	2 days	Tue 1/15/08	Wed 1/16/08	
31	**DOW Hybrid Membrane Demonstration**	**49 days**	**Thu 1/17/08**	**Tue 3/25/08**	**$261,731.00**
32	Install DOW hybrid membranes	2 days	Thu 1/17/08	Fri 1/18/08	
33	DOW Hybrid Ripening period	15 days	Thu 1/17/08	Wed 2/6/08	
34	DOW Hybrid 9 flux and recovery points	18 days	Thu 2/7/08	Mon 3/3/08	
35	DOW Hybrid Most affordable point	15 days	Tue 3/4/08	Mon 3/24/08	
36	Complete Koch testing	1 day	Tue 3/25/08	Tue 3/25/08	
37	Submit project update report to DWR	5 days	Tue 3/25/08	Mon 3/31/08	
38	Order long lead interstage-PX hybrid items	45 days	Tue 3/25/08	Mon 5/26/08	
39	**Unbalanced PX high recovery testing**	**76 days**	**Wed 3/26/08**	**Wed 7/9/08**	**$405,949.00**
40	Install PX flow scheme membrane set	2 days	Wed 3/26/08	Thu 3/27/08	
41	Flush and base line membranes	10 days	Fri 3/28/08	Thu 4/10/08	
42	Exicute unbalance test protocl @ 9 points	18 days	Fri 4/11/08	Tue 5/6/08	
43	PX unbalanced most affordable point (24/7 for 2 months)	45 days	Wed 5/7/08	Tue 7/8/08	
44	Clean membranes	2 days	Wed 6/4/08	Thu 6/5/08	
45	Complete Unbalanced PX testing	1 day	Wed 7/9/08	Wed 7/9/08	
46	Submit project update report to DWR	5 days	Wed 7/9/08	Tue 7/15/08	
47	**Interstage-PX hybrid high recovery testing**	**86 days?**	**Wed 7/9/08**	**Wed 11/5/08**	**$459,364.00**
48	Reconfigure system for Interstage-PX hybrid design	10 days	Wed 7/9/08	Tue 7/22/08	
49	Exicute interstage-PX hybrid protocol 18 points	30 days	Wed 7/23/08	Tue 9/2/08	
50	Interstage-PX hybrid most affordable point (24/7 for 2 months)	45 days	Wed 9/3/08	Tue 11/4/08	
51	Clean membranes	2 days	Wed 10/1/08	Thu 10/2/08	
52	Complete Interstage-PX Hybrid testing	1 day?	Wed 11/5/08	Wed 11/5/08	
53	Complete ADC Prop 50 testing	1 day	Wed 11/5/08	Wed 11/5/08	
54	Write final report	30 days	Wed 11/5/08	Tue 12/16/08	
55	Submit final report, billing, conclude project	2 days	Wed 12/17/08	Thu 12/18/08	
56	Member/general workshop and publish results	2 days	Fri 12/19/08	Mon 12/22/08	
57	Project Duration	450 days	Tue 4/3/07	Mon 12/22/08	

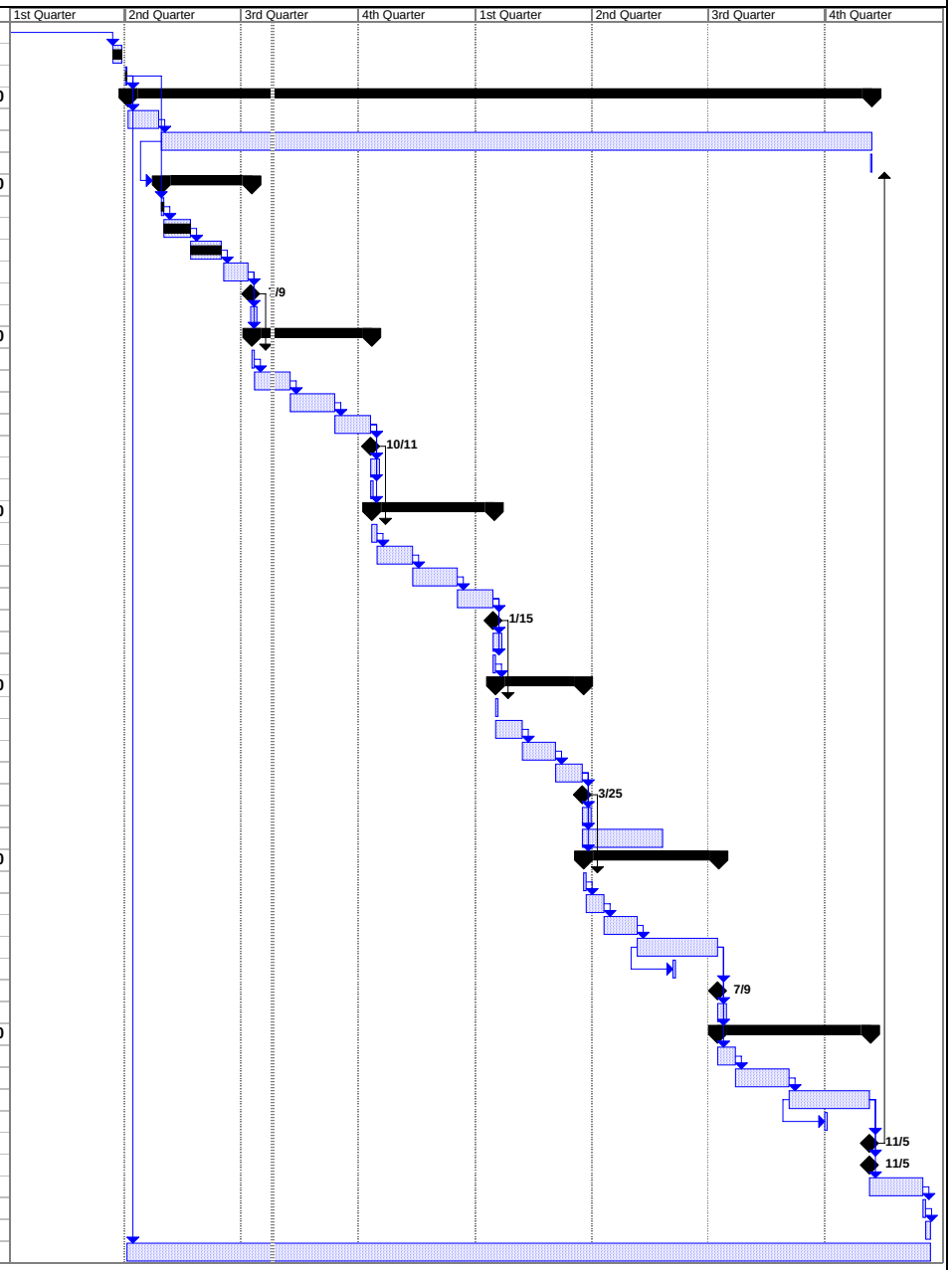

Project: ADC 2007 Project Schedule
Date: Wed 7/25/07

Task		Summary		Rolled Up Progress		Project Summary	
Progress		Rolled Up Task		Split		Group By Summary	
Milestone		Rolled Up Milestone		External Tasks		Deadline	

Attachments

ADC Membership List 6-1-07

ADC Membership	Contact	Tel #	e-mail
California Department of Water Resources	Fawzi Karajeh, Ph.D.	916-651-9669	fkarajeh@water.ca.gov
California Energy Commission	Shahid Chaudhry	916-654-4858	Schaudhr@energy.state.ca.us
Carollo Engineers	Thomas F. Seacord, P.E.	208-376-2288	tseacord@carollo.com
City of Santa Cruz Water Department	Bill Kocher, Director	(831) 420-5200	bkocher@ci.santa-cruz.ca.us
David Brown Union Pumps - Textron	Rick Hammond	269 209 4599	rhammond@dbup.textron.com
Energy Recovery Inc.	GG Pique	510-483-7370	icameron@energy-recovery.com
FilmTec Corporation	Steven Coker	979 238-1815	LDJohnson@dow.com
Koch Membrane Systems	Rick Lesson	858-635-1053	rklesan@kochmembrane.com
Marin Municipal Water District	Bob Castle	415-945-1556	bcastle@marinwater.org
Metropolitan Municipal Water District of Southern California	Stephen N. Arakawa Warren Teitz	213-217-6000 (213) 217-7418	wteitz@mwdh2o.com
Municipal Water District of Orange County	Karl Seckel	(714) 963-3058	kseckel@mwdoc.com
Naval Facilities Engineering Service Center	Bill Varnava	805-982-6640	william.varnava@navy.mil
New Water Supply Coalition (US Desal Coalition)	Hal Furman	858-456-3502sd 202-737-0700wa	Hal.Furman@USDesal.org
Pentair - CodeLine Pressure Vessels	Rob Donofrio	909-476-7292	rdonofrio@pentairwater.com
Poseidon Resources	Nikolay Voutchkov	203-327-7740 ext 126	nvoutchkov@poseidon1.com
San Diego County Water Authority	Robert Yamada Cesar Lopez	(858) 522-6600 858-522-6745	ryamada@sdcwa.org
Sandia National Laboratories	Richard Kottenstette	(505) 845-3270	rkotten@sandia.gov
Toray Membranes	Randy Truby	858-679-0770	Truby.Randy@toraymem.com
US Bureau of Reclamation	Steve Dundorf Michelle Chapman	303-445-2263 303-445-2264	SDUNDORF@do.usbr.gov
West Basin Municipal Water District	Paul E. Shoenberger Phil Lauri	(310) 660-6218 (310) 660-6238	pauls@wcbwater.org
Zenon	Annyse Balkwill	905-465-3030 x3468	annyse.balkwill@ge.com

Water Quality Data

TIME			pH			CONDUCTIVITY						TDS							TURBIDITY		SDI	BORON			OTHER					
				pH				Conductivity (mS/cm)							TDS (mg/L)				Turbidity (NTU)		Density Index		Boron (mg/L)			Inhibitor Pump			FEED VFD	
Date	Time	Operation Time	$pH_{F\text{-}sys}$	$pH_{P\text{-}sys}$	$pH_{C\text{-}sys}$	$C_{CF\text{-}out}$	$C_{F\text{-}PX\text{-}out}$	$C_{F\text{-}sys}$	$C_{P\text{-}sys}$	$C_{C\text{-}sys}$	$C_{C\text{-}PX\text{-}out}$	$TDS_{CF\text{-}out}$	$TDS_{F\text{-}PX\text{-}out}$	PX % Inc	$TDS_{F\text{-}sys}$	$TDS_{P\text{-}sys}$	$TDS_{C\text{-}sys}$	$TDS_{C\text{-}PX\text{-}out}$	$NTU_{MF\text{-}in}$	$NTU_{CF\text{-}out}$	$SDI_{CF\text{-}out}$	$B_{CF\text{-}out}$	$B_{F\text{-}sys}$	$B_{P\text{-}sys}$	V_{TANK}	Speed	HP VFD Speed	PX VFD Speed	Speed	Notes
MM/DD/YY	hh:mm	hh.hh	SC5	SC11	SC6	SC3	SC4	SC5	SC11	SC6	SC7	SC3	SC4		SC5	SC11	SC6	SC7	CART	meter	CART	SC3	SC5	SC11	(gallons)	(gph)	(Hertz)	(Hertz)	(Hertz)	
05/30/07	11:25	4151.46	7.90	4.40	7.61	50.70	52.35	51.62	322.30	84.62	81.53	32.56	33.77	3.7%	33.23	154.20	60.80	57.95	nd	0.040	4.0	nd	nd	nd	7.0	60/75	44.85	33.08	61.20	
06/05/07	12:05	4199.43	7.88	6.77	7.73	49.81	53.23	51.63	353.50	84.01	82.22	31.88	34.41	7.9%	33.27	169.50	60.30	58.57	nd	0.057	4.0	nd	nd	nd	11.0	70/75	33.28	44.94	61.20	
06/06/07	10:56	4219.43	7.91	7.69	7.69	50.30	52.13	51.05	333.90	83.38	81.08	32.24	33.61	4.2%	32.84	159.80	59.75	57.53	nd	0.051	3.9	nd	nd	nd	8.0	70/75	44.92	33.13	61.20	bl
06/07/07	9:58	4240.04	7.73	6.01	7.6	50.13	52.25	51.10	328.80	83.46	81.03	32.16	33.67	4.7%	32.87	157.40	59.77	57.48	nd	0.044	3.6	nd	nd	nd	5.2	70/75	44.91	33.08	61.20	bl
06/11/07	12:08	4256.76	8.07	6.75	7.83	49.62	52.71	50.86	355.70	82.83	81.73	32.62	33.62	3.1%	32.73	170.80	59.72	57.68	1.852	0.067	4.0	nd	nd	nd	23.5	70/75	44.98	33.19	61.20	bv
06/12/07	9:51	4278.47	7.90	6.4	7.77	49.27	51.03	49.98	343.20	80.85	79.22	31.57	32.85	4.1%	32.10	164.40	57.44	55.84	1.345	0.086	3.7	nd	nd	nd	21.0	70/70	44.91	33.49	61.20	bl
06/13/07	12:00	4299.52	8.10	7.05	7.9	49.04	50.86	49.93	355.70	80.89	78.95	31.40	32.72	4.2%	32.06	170.30	57.39	55.57	0.933	0.093	4.1	nd	nd	nd	18.0	70/77	44.92	33.35	61.20	bv
06/14/07	9:15	4316.9	8.10	6.96	7.89	48.97	51.31	49.86	363.30	81.13	79.33	31.37	33.06	5.4%	32.04	174.20	57.62	55.92	0.961	0.095	4.1	nd	nd	nd	15.8	70/75	44.92	33.34	61.20	bv
06/19/07	10:30	4342.16	7.99	6.29	7.79	48.88	51.57	49.87	475.50	80.39	78.43	31.28	33.21	6.2%	32.03	229.30	57.01	55.18	1.056	0.067	3.4	nd	4.6	0.91	12.5	70/75	35.83	27.51	61.20	bl
06/20/07	10:31	4364.54	7.97	6.47	7.85	49.03	53.22	50.76	519.30	85.11	82.68	31.45	34.43	9.5%	32.73	251.10	61.44	59.01	1.122	0.092	3.9	nd	4.7	0.94	9.7	70/75	35.86	24.58	61.20	bl px out tds high. re-run point on 6-21
06/21/07	10:05	4386.46	7.87	6.39	7.77	48.78	51.86	49.95	453.00	83.80	80.41	31.23	33.42	7.0%	32.08	218.20	60.05	56.94	0.802	0.079	3.9	nd	4.6	0.88	7.5	70/75	35.85	25.02	61.20	bl
06/22/07	10:36	4410.98	7.73	5.96	7.57	48.86	51.73	49.91	492.80	87.71	82.49	31.30	33.35	6.5%	32.07	237.90	63.60	58.81	0.771	0.057	3.8	nd	4.6	0.95	24.3	70/75	36.08	22.45	61.20	bl
06/26/07	10:50	4433.05	7.79	5.91	7.66	48.83	51.12	49.78	371.80	80.13	78.28	31.27	32.94	5.3%	31.97	178.50	56.71	55.03	1.121	0.087	3.6	nd	4.8	0.80	21.8	70/75	45.19	34.07	61.20	bl
06/27/07	10:10	4454.51	7.91	6.22	7.72	48.81	51.39	49.91	397.80	84.82	82.69	31.26	33.11	5.9%	32.05	191.10	60.98	59.00	0.826	0.062	3.8	nd	4.7	0.81	18.5	70/75	45.20	29.77	61.20	bl
06/28/07	9:25	4476.05	7.96	6.32	7.75	48.85	51.71	49.99	429.60	88.34	85.65	31.30	33.35	6.5%	32.12	206.70	64.14	61.70	0.757	0.085	4.3	nd	4.7	0.86	15.8	70/75	45.19	27.13	61.20	bl
06/29/07	10:13	4497.56	8.02	6.14	7.83	48.63	51.44	50.06	307.40	81.49	80.02	31.15	33.15	6.4%	32.17	146.90	57.96	56.58	0.663	0.1	4.7	nd	4.7	0.67	12.6	70/75	54.01	38.91	61.20	bl
07/03/07	8:45	4520.82	7.93	6.03	7.78	48.84	51.07	49.63	335.80	84.83	82.52	31.27	32.88	5.1%	31.87	160.90	61.01	58.87	1.127	0.102	5.0	nd	4.7	0.74	9.7	70/75	53.99	34.69	61.20	bl
07/05/07	16:25	4527.33	8.12	7.84	7.88	49.18	52.07	50.38	385.80	90.10	87.82	31.54	33.59	6.5%	32.39	185.40	65.66	63.58	0.769	0.118	5.1				9.0	50/70	53.99	31.14	61.20	bv
07/06/07	14:45	4532.55	8.13	6.59	7.87	49.05	50.73	49.99	290.70	81.29	79.88	31.46	32.65	3.8%	32.12	138.80	57.80	56.45	0.87	0.1	4.8				8.0	70/70	60.00	42.39	61.20	bv
07/09/07	13:50	4536.97	7.87	5.88	7.71	48.86	52.06	50.27	305.30	84.78	83.51	31.27	33.59	7.4%	32.27	145.80	60.93	59.72	1.383	0.082	4.3				7.5	70/70	60.00	39.28	61.20	bl
07/10/07	16:40	4543.67	8.07	7.51	7.82	48.84	51.42	49.90	346.10	90.52	88.04	31.34	33.12	5.7%	32.06	165.80	66.15	63.79	1.204	0.142	4.9				6.0	70/70	60.00	33.37	61.20	bv

TIME			CALCULATED PARAMETERS			TEMP	PRESSURES										FLOWS				MAIN PANEL KW METER				VFD KW METER			
		Operation	RO	Flux	Power		P_{MF-in}	P_{MF-out}	P_{CF-in}	P_{CF-out}	$P_{PX-Feed\ In}$	$P_{PX-conc\ out}$	$P_{PX-boost\ suct}$	P_{F-SYS}	P_{C-SYS}	P_{P-SYS}	$Q_{F-HP\ Pump}$	$Q_{PX\ Pump}$	$Q_{Feed\ PX-In}$	Q_{P-SYS}	A_{sys}	P HP/PX	P booster	Power	PX power	HP Power	Feed Pump	
Date	Time	Time	Recovery %	Gfd	kWh/m3	Influent	(psi)	(psi)	(psi)	(psi)	(psi)	(psi)	(psi)	(psi)	(psi)	(psi)	(gpm)	(gpm)	(gpm)	(gpm)	amp	(kw)	(kw)	Factor	(kw)	(kw)	(kw)	Notes
MM/DD/YY	hh:mm	hh.hh				Temp F	1	2	3	4	5	6	7	8	9	10	11	12	13	14	15	16	17	18	19	20	21	
5/30/2007	11:15	4151.28	42.3%	7.47	1.90	57.0	51.2	39.4	38.8	33.9	34.7	27.7	800	818	808	2.9	44.0	57.95	59.56	43.6	25.00	18.85	nd	0.900	0.90	17.00	5.00	
6/5/2007	11:30	4198.44	43.0%	7.46	1.87	58.0	51.2	38.4	37.8	32.9	34.0	27.1	790	807	798	2.5	44.0	57.60	57.60	43.5	24.50	18.48	nd	0.900	0.85	16.50	4.95	
6/6/2007	10:15	4218.73	42.6%	7.47	1.90	58.0	51.1	40.5	39.8	38.6	35.6	28.6	790	807	800	2.7	44.0	58.24	58.75	43.6	24.40	18.80	nd	0.900	0.85	16.50	4.93	bl
6/7/2007	9:25	4239.52	42.6%	7.46	1.87	58.0	51.2	40.7	40.0	38.8	33.7	27.1	795	815	802	2.5	43.5	57.80	58.70	43.5	24.40	18.50	nd	0.900	0.85	16.60	4.93	bl
6/11/2007	11:45	4256.49	43.1%	7.49	1.84	59.8	51.0	43.8	43.3	36.5	36.0	30.0	785	800	790	2.8	41.2	57.53	57.75	43.7	24.00	18.22	nd	0.898	0.90	16.30	4.90	jm
6/12/2007	9:30	4278.07	42.5%	7.47	1.87	60.0	51.0	22.4	21.9	20.5	15.5	9.7	780	795	785	2.5	42.5	57.50	59.10	43.6	24.50	18.55	nd	0.898	0.90	16.60	4.91	bl
6/13/2007	11:45	4299.24	42.7%	7.49	1.84	61.0	50.5	29.0	28.0	23.8	23.0	15.0	780	800	790	2.4	43.0	57.47	58.76	43.7	24.50	18.24	nd	0.900	0.90	16.30	4.95	bv
6/14/2007	9:00	4316.67	42.8%	7.47	1.82	62.0	50.8	39.0	38.0	32.5	32.0	25.5	770	795	790	2.4	43.5	57.66	58.32	43.6	23.80	18.06	nd	0.899	0.90	16.30	4.95	bv
6/19/2007	10:12	4341.84	42.5%	6.00	1.71	62.0	53.9	42.3	42.0	40.9	39.8	34.7	735	745	742	2.2	35.5	45.70	47.27	35.0	19.75	13.57	nd	0.842	0.50	12.10	4.65	bl
6/20/2007	10:10	4364.19	46.4%	6.00	1.78	61.5	54.0	44.2	43.9	43.0	41.9	38.4	780	790	785	1.3	32.8	39.68	40.39	35.0	19.80	14.15	nd	0.840	0.35	12.60	4.55	bl px out tds high. re-run point on 6-21
06/21/07	9:45	4386.12	47.0%	5.98	1.77	60.5	54.4	47.8	47.3	46.2	45.0	40.9	775	782	778	1.2	35.5	39.43	44.53	34.9	19.75	14.05	nd	0.845	0.29	12.60	4.59	bl Unbalanced PX to compensate low flo
06/22/07	10:20	4410.71	50.1%	5.98	1.85	62.0	54.5	39.5	39.0	38.1	36.9	33.3	808	819	815	0.9	36.0	34.71	40.95	34.9	20.44	14.68	nd	0.862	0.29	13.50	4.55	bl Unbalanced PX to compensate low flo
06/26/07	10:20	4432.57	41.8%	7.47	1.82	63.0	50.4	32.9	32.1	30.2	27.4	19.0	759	779	770	1.9	44.5	59.28	60.74	43.6	23.85	18.01	nd	0.900	0.95	15.19	4.95	bl
06/27/07	9:50	4454.19	45.8%	7.47	1.87	64.0	52.0	36.9	36.1	34.5	33.0	27.4	804	819	811	1.9	44.5	50.18	51.65	43.6	23.25	18.51	nd	0.902	0.61	16.90	4.83	bl
06/28/07	9:10	4475.80	49.4%	7.42	1.92	64.5	52.8	39.1	38.5	37.0	33.5	29.1	835	847	840	1.9	44.0	44.31	47.23	43.3	24.73	18.84	nd	0.902	0.48	17.35	4.75	bl Unbalanced PX to compensate low flo
06/29/07	9:55	4497.25	43.3%	8.91	1.95	65.0	47.5	29.5	28.3	25.8	23.8	14.1	805	832	819	3.1	51.5	68.02	68.10	52.0	29.92	23.04	nd	0.921	1.37	20.50	5.17	bl
07/03/07	nd	4520.51	45.9%	8.97	1.93	65.0	48.8	34.6	32.7	30.2	28.1	20.0	830	855	840	3.3	51.7	60.03	61.70	52.3	29.90	22.92	nd	0.918	0.97	20.90	5.11	bl
07/05/07	nd	4527.09	49.7%	8.97	1.98	65.5	50.0	43.3	42.5	40.2	38.6	33.0	880	890	885	3.3	51.7	52.55	52.92	52.3	30.40	23.47	nd	0.920	1.00	21.60	5.00	bv
07/06/07	nd	4532.36	43.4%	9.91	1.98	64.0	44.0	32.0	30.5	27.5	24.5	13.0	820	850	840	4.5	58.0	77.44	75.38	57.8	33.60	26.05	nd	0.922	1.80	24.10	5.40	bv
07/09/07	nd	4536.59	46.0%	9.98	2.01	62.5	46.5	37.0	35.8	32.8	29.7	21.0	857	883	870	4.0	56.5	67.31	68.44	58.2	34.60	26.53	nd	0.930	1.45	25.10	5.37	bl
07/10/07	nd	4543.50	50.3%	9.93	2.06	64.0	47.0	35.0	34.0	28.0	29.5	22.8	910	930	920	4.3	58.0	57.62	57.25	57.9	35.05	27.15	nd	0.922	0.90	26.10	5.20	bv

FIGURE X: Toray TM 800-400 Specific Power

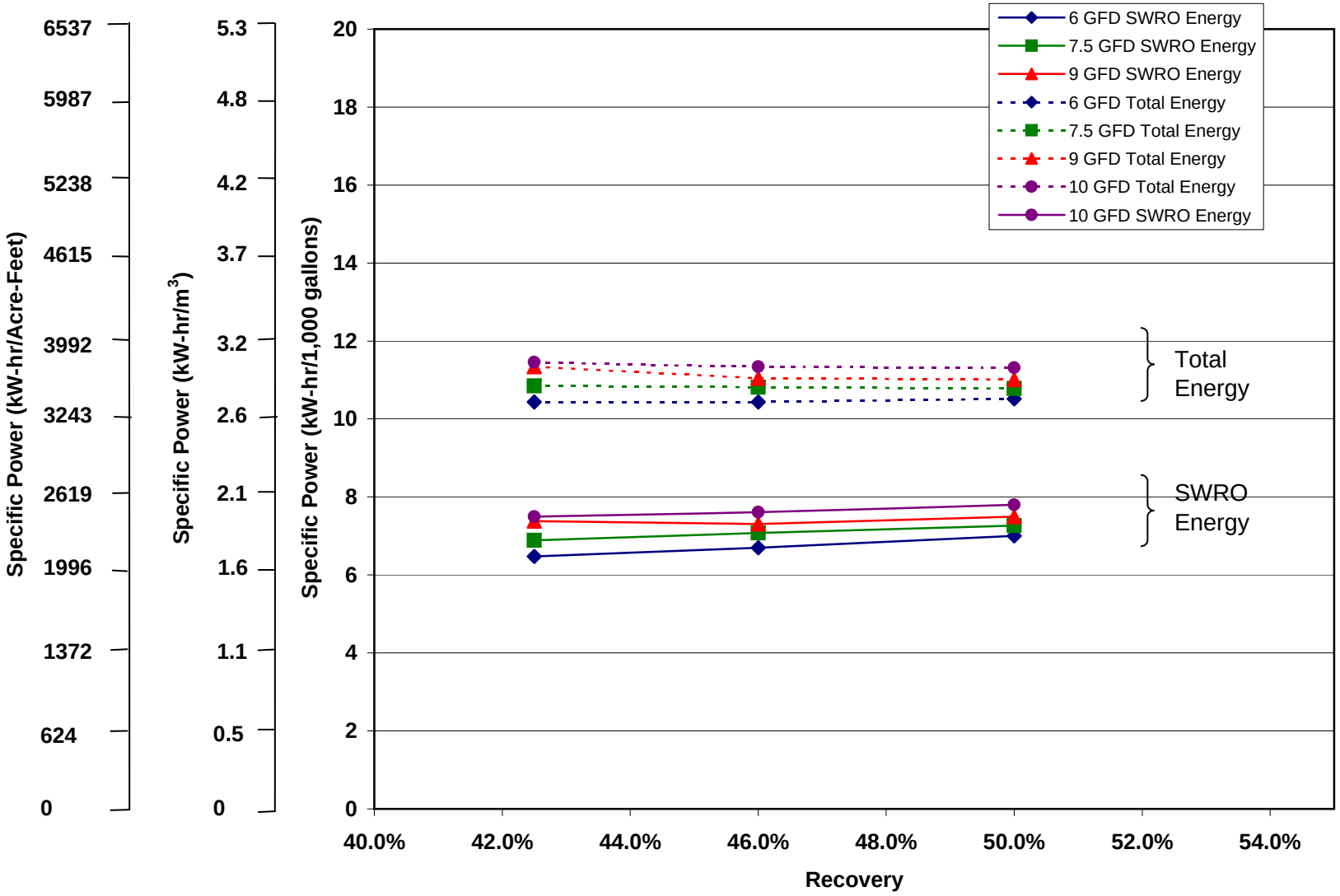

FIGURE X. Estimated Costs for 50-MGD SWRO WTP (Toray TM 800-400)

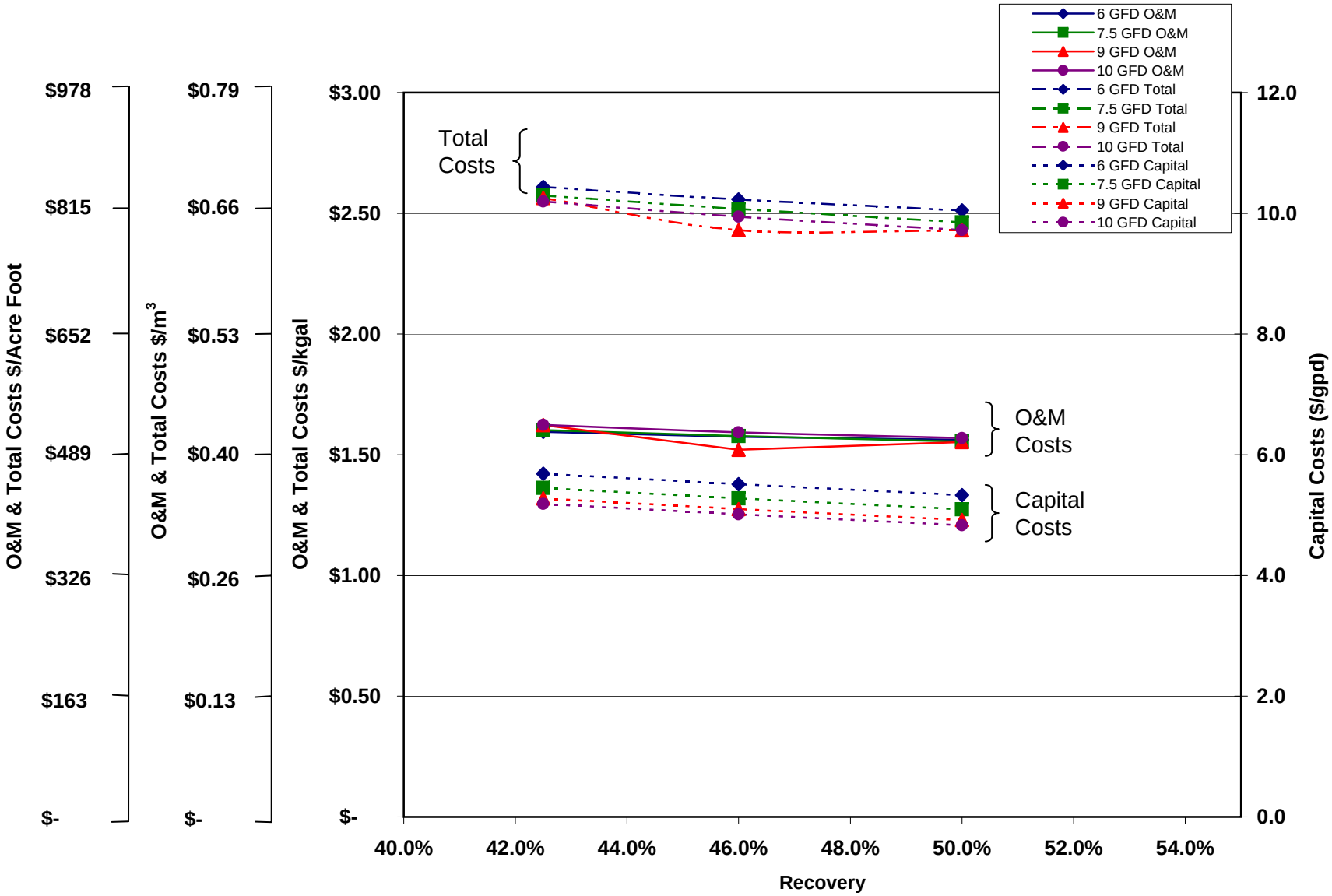

	Capital Cost	O&M Cost	Present Value	Annual Cost
6 GFD, 42.5% Recovery	$ 270,108,101	$ 27,657,458 per year	$ 695,271,012	$ 45,228,377 per year
6 GFD, 46% Recovery	$ 261,803,985	$ 27,302,595 per year	$ 681,511,788	$ 44,333,320 per year
6 GFD, 50% Recovery	$ 253,216,397	$ 27,080,292 per year	$ 669,506,855	$ 43,552,382 per year
7.5 GFD, 42.5% Recovery	$ 258,952,168	$ 27,776,606 per year	$ 685,946,684	$ 44,621,816 per year
7.5 GFD, 46% Recovery	$ 250,649,846	$ 27,351,099 per year	$ 671,103,282	$ 43,656,232 per year
7.5 GFD, 50% Recovery	$ 242,060,464	$ 26,950,171 per year	$ 656,350,649	$ 42,696,552 per year
9 GFD, 42.5% Recovery	$ 250,600,977	$ 28,142,757 per year	$ 683,224,125	$ 44,444,710 per year
9 GFD, 46% Recovery	$ 242,298,106	$ 26,371,759 per year	$ 647,696,685	$ 42,133,599 per year
9 GFD, 50% Recovery	$ 233,709,274	$ 26,925,433 per year	$ 647,619,172	$ 42,128,557 per year
10 GFD, 42.5% Recovery	$ 246,425,382	$ 28,160,581 per year	$ 679,322,530	$ 44,190,905 per year
10 GFD, 46% Recovery	$ 238,121,962	$ 27,617,051 per year	$ 662,663,727	$ 43,107,226 per year
10 GFD, 50% Recovery	$ 229,533,678	$ 27,202,896 per year	$ 647,708,873	$ 42,134,392 per year

Interest	5.0%	
Inflation	3%	
Project Life	30	years

	Capital Cost	O&M Cost	Treatment Cost	
6 GFD, 42.5% Recovery	$ 5.69 per gpd	$ 1.60 per kgal	$ 2.61 per kgal	$ 850 per AF
6 GFD, 46% Recovery	$ 5.51 per gpd	$ 1.57 per kgal	$ 2.56 per kgal	$ 833 per AF
6 GFD, 50% Recovery	$ 5.33 per gpd	$ 1.56 per kgal	$ 2.51 per kgal	$ 819 per AF
7.5 GFD, 42.5% Recovery	$ 5.45 per gpd	$ 1.60 per kgal	$ 2.57 per kgal	$ 839 per AF
7.5 GFD, 46% Recovery	$ 5.28 per gpd	$ 1.58 per kgal	$ 2.52 per kgal	$ 821 per AF
7.5 GFD, 50% Recovery	$ 5.10 per gpd	$ 1.55 per kgal	$ 2.46 per kgal	$ 802 per AF
9 GFD, 42.5% Recovery	$ 5.28 per gpd	$ 1.62 per kgal	$ 2.56 per kgal	$ 835 per AF
9 GFD, 46% Recovery	$ 5.10 per gpd	$ 1.52 per kgal	$ 2.43 per kgal	$ 792 per AF
9 GFD, 50% Recovery	$ 4.92 per gpd	$ 1.55 per kgal	$ 2.43 per kgal	$ 792 per AF
10 GFD, 42.5% Recovery	$ 5.19 per gpd	$ 1.62 per kgal	$ 2.55 per kgal	$ 831 per AF
10 GFD, 46% Recovery	$ 5.01 per gpd	$ 1.59 per kgal	$ 2.49 per kgal	$ 810 per AF
10 GFD, 50% Recovery	$ 4.83 per gpd	$ 1.57 per kgal	$ 2.43 per kgal	$ 792 per AF

Revision Log:

Date	Description
1/25/2006	Added total treatment specifc power to pumping section.
2/3/2006	Added revision log to summary sheet.
2/3/2006	Changed membrane pricing from $700/elem to $475/elem per Lance Johnson's recommendation.
3/22/2006	Changed SW30HRLE-400i membrane pricing to $500 per FilmTec's recommendation.
3/22/2006	Changed membrane life per FilmTec's Cumulitive Annual Replacement Rate Matrix
3/22/2006	Revised membrane replacement cost calculation.
3/22/2006	Corrected membrane element surface area.
3/23/2006	Removed reference to "per train" in cell B49 on the 9 GFD worksheet.
4/5/2006	Increased number of operators from 10 to 25 per recommendation of N. Voutchkov
4/5/2006	Increased the maintainance costs from 0.5% of capital cost to 1.5% of capital cost
4/5/2006	Added $10-million for permitting costs.
4/9/2006	Included capital cost for intake pump station.
4/10/2006	Included capital & O&M Cost for solids handling and disposal.
4/10/2006	Changed unit cost for electricity from $0.12/kW-hr to $0.08/kW-hr based upon recommendations from
4/10/2006	Changed bond payment period from 20 years to 30 years based upon recommendations from SDCWA
4/10/2006	Changed interest rate from 3.5% to 5% based upon recommendations from SDCWA & West Basin
4/25/2006	Added $3-million for FW Storage. Adjusted Intake and Filtered water lift station costs and finished wat
7/17/2007	Added 10gfd, Changed Recovery (delete 35%, added 46%) Adjusted Cartridge Filter Cost.
7/18/2007	Adjusted Carbon Dioxide Dosing Cost
7/19/2007	Corrected all motor efficiencies from 90% to 95% cell b,c,d23

9 gfd Detailed Costs

Plant Utilization Factor	95%

	Scenario 1	Scenario 2	Scenario 3
Flux, GFD	9	9	9
Recovery	42.5%	46.0%	50%
Raw Water Flow, MGD	118	109	100
Finished Water Flow, MGD	50	50	50
PUMPING POWER			
Raw Water Pumping TDH, ft H2O	200	200	200
Raw Water Pumping Efficiency	80%	80%	80%
Raw Water Pumping Power, kW-hr	92,460	85,420	78,590
Filtered Water Lift Pumping TDH, ft H2O	105	105	105
Filtered Water Lift Pump Efficiency	80%	80%	80%
Filtered Water Lift Pump Power, kW-hr	48,540	44,850	41,260
RO/PX Booster Pump Specific Power, kW-hr/kgal	7.38	7.31	7.50
RO/PX Booster Pump Power, kW-hr/day	369080	365300	374760
Permeate Lift Pumping TDH, ft H2O	40	40	40
Permeate Lift Pumping Efficiency	80%	80%	80%
Permeate Lift Pumping Power, kW-hr	7,860	7,860	7,860
Finished Water Pumping TDH, ft H2O	200	200	200
Finished Water Pumping Efficiency	80%	80%	80%
Finished Water Pumping Power, kW-hr	39,300	39,300	39,300
Motor Efficiency	95%	95%	95%
Total Treatment Pumps Specific Power kWh/kgal	11.34	11.04	11.01
CHEMICAL CONSUMPTION			
Prechlorination, mg/L	2	2	2
Prechlorination, lbs/day	1960	1820	1670
Dechlorination, mg/L	4.6	4.6	4.6
Dechlorination, lbs/day	4510	4170	3840
Ferric Chloride, mg/L	10	10	10
Ferric Chloride, lbs/day	9800	9060	8330
Filter Aid, mg/L			
Filter Aid, lbs/day	0	0	0
Lime, mg/L	44	44	44
Lime, lbs/day	18320	18320	18320
Carbon Dioxide, mg/L	16	16	16
Carbon Dioxide, lbs/day	6670	6670	6670
Chlorine (Disinfection), mg/L	1.5	1.5	1.5
Chlorine (Disinfection), lbs/day	630	630	630
MISC. UNITS			
Cartridge Filter Loading Rate, gpm/10-inch	4	4	4
Cartridge Filter Length, inches/filter	40	40	40
No. of Cartridge Filters, No.	5200	4800	4400
Cartridge Filter Replacement Frequency, Hours	1000	1000	1000
RO Element Membrane Area, Ft2	400	400	400
RO Elements Per Vessel, No.	7	7	7
No. of Vessels per Train	331	331	331
No. of Trains	6	6	6
No. of Membranes	13889	13889	13889
Membrane Life, Years	6	5.5	5
Clean in Place Frequency, Times Per Year	6	6	6
Clean in Place Cost, $ per cleaning	$ 15,000	$ 15,000	$ 15,000
Labor, No. of Operators	25	25	25

OPERATIONS COST SUMMARY

	Scenario 1	Scenario 2	Scenario 3
Flux, GFD	9	9	9
Recovery	42.5%	46.0%	50%
POWER COSTS			
Raw Water Pumping, $/yr	$ 2,699,832	$ 2,494,264	$ 2,294,828
Filtered Water Pumping, $/yr	$ 1,417,368	$ 1,309,620	$ 1,204,792
RO/PX Booster Pumping, $/yr	$ 10,238,279	$ 10,133,422	$ 10,395,842
Permaete Lift Pumping, $/yr	$ 229,512	$ 229,512	$ 229,512
Finished Water Pumping, $/yr	$ 1,147,560	$ 1,147,560	$ 1,147,560
CHEMICAL COSTS			
Prechlorination, $/yr	$ 815,556	$ 757,302	$ 694,887
Dechlorination, $/yr	$ 469,153	$ 433,784	$ 399,456
Ferric Chloride, $/yr	$ 577,686	$ 534,064	$ 491,033
Filter Aid, $/yr	$ -	$ -	$ -
Lime, $/yr	$ 317,623	$ 317,623	$ 317,623
Carbon Dioxide, $/yr	$ 92,513	$ 92,513	$ 92,513
Chlorine (Disinfection), $/yr	$ 262,143	$ 262,143	$ 262,143
Dewatering Chemicals, $/yr	$ 283,000	$ 261,500	$ 240,000
MISC UNITS			
Media Filter Backwash	$ 52,535	$ 49,800	$ 47,025
Media Filter O&M (Media Loss)	$ 596,125	$ 558,800	$ 521,455
Cartridge Filters, $/yr	$ 865,488	$ 798,912	$ 732,336
Membrane Replacement, $/yr	$ 1,157,407	$ 1,262,626	$ 1,388,889
Clean-in-Place, $/yr	$ 90,000	$ 90,000	$ 90,000
Solids Disposal	$ 1,106,000	$ 102,300	$ 940,000
Maintenance, $/yr	3,759,015	3,634,472	3,505,639
Misc Expenses (e.g., Utilities)	$ 590,962	$ 526,542	$ 554,900
Labor, $/yr	$ 1,375,000	$ 1,375,000	$ 1,375,000
TOTAL O&M COST			
$/year	$ 28,142,757	$ 26,371,759	$ 26,925,433
$/kgal	$1.62	$1.52	$1.55

CAPITAL COST SUMMARY

		1995	2006
	ENR CCI	5524.15	7629.95
	Scenario 1	Scenario 2	Scenario 3
Flux, GFD	9	9	9
Recovery	42.5%	46.0%	50%
Intake/Intake Pump Station	$ 7,500,000	$ 7,200,000	$ 6,900,000
Prechlorination System	$ 453,200	$ 429,000	$ 404,100
Dechlorination System	$ 475,000	$ 462,500	$ 450,000
Ferric Chloride System	$ 4,868,900	$ 4,065,200	$ 3,261,500
Filter Aid System	$ -	$ -	$ -
Prefiltration	$ 12,093,300	$ 11,278,800	$ 10,464,300
Sand	$ 409,400	$ 378,800	$ 348,100
Anthracite	$ 428,000	$ 396,000	$ 364,000
Garnet	$ 1,290,300	$ 1,193,700	$ 1,097,100
Prefiltration Backwash System	$ 5,604,800	$ 5,265,600	$ 4,926,400
Dewatering Equipment	$ 13,500,000	$ 12,750,000	$ 12,000,000
Filtered Water Lift Station	$ 6,000,000	$ 5,700,000	$ 5,400,000
RO Membranes	$ 6,944,444	$ 6,944,444	$ 6,944,444
RO Skids	$ 15,873,016	$ 15,873,016	$ 15,873,016
RO HP Pumps	$ 2,370,000	$ 2,370,000	$ 2,370,000
PX Booster Pumps	$ 1,200,000	$ 1,200,000	$ 1,200,000
Energy Recovery	$ 5,167,484	$ 4,483,696	$ 3,819,444
Building	$ 22,353,400	$ 22,353,400	$ 22,353,400
Electrical	$ 15,777,113	$ 15,232,663	$ 14,669,461
Instrumentation/Control	13,147,594	12,693,886	12,224,550
Transfer Pump Station	$ 458,300	$ 458,300	$ 458,300
Permeate Flush System	$ 248,700	$ 248,700	$ 248,700
Process Piping	$ 5,524,800	$ 5,524,800	$ 5,524,800
Yard Piping	$ 1,558,900	$ 1,558,900	$ 1,558,900
Cartridge Filters	$ 5,250,000	$ 4,900,000	$ 4,375,000
Clean-in-Place System	$ 200,000	$ 200,000	$ 200,000
Lime System	$ 383,700	$ 383,700	$ 383,700
Carbon Dioxide System	$ 1,122,000	$ 1,122,000	$ 1,122,000
Chlorination System	$ 1,000,000	$ 1,000,000	$ 1,000,000
Ground Storage Tank	$ 3,000,000	$ 3,000,000	$ 3,000,000
High Service Pumping Station	$ 2,400,000	$ 2,400,000	$ 2,400,000
Site Work	$ 3,798,300	$ 3,798,300	$ 3,798,300
Subtotal	$ 160,400,652	$ 154,865,404	$ 149,139,516
Engineering & CM (25%)	$ 40,100,163	$ 38,716,351	$ 37,284,879
Permitting	$ 10,000,000	$ 10,000,000	$ 10,000,000
Contractor Overhead & Profit (10%)	$ 16,040,065	$ 15,486,540	$ 14,913,952
Contingencies (15%)	$ 24,060,098	$ 23,229,811	$ 22,370,927
Total Capital Cost	$ 250,600,977	$ 242,298,106	$ 233,709,274

7.5 GFD Detailed Costs

Plant Utilization Factor	95%

	Scenario 1	Scenario 2	Scenario 3
Flux, GFD	7.5	7.5	7.5
Recovery	42.5%	46.0%	50%
Raw Water Flow, MGD	118	109	100
Finished Water Flow, MGD	50	50	50
PUMPING POWER			
Raw Water Pumping TDH, ft H2O	200	200	200
Raw Water Pumping Efficiency	80%	80%	80%
Raw Water Pumping Power, kW-hr	92,460	85,420	78,590
Filtered Water Lift Pumping TDH, ft H2O	105	105	105
Filtered Water Lift Pump Efficiency	80%	80%	80%
Filtered Water Lift Pump Power, kW-hr	48,540	44,850	41,260
RO/PX Booster Pump Specific Power, kW-hr/kgal	6.89	7.08	7.27
RO/PX Booster Pump Power, kW-hr/day	344480	353940	363400
Permeate Lift Pumping TDH, ft H2O	40	40	40
Permeate Lift Pumping Efficiency	80%	80%	80%
Permeate Lift Pumping Power, kW-hr	7,860	7,860	7,860
Finished Water Pumping TDH, ft H2O	200	200	200
Finished Water Pumping Efficiency	80%	80%	80%
Finished Water Pumping Power, kW-hr	39,300	39,300	39,300
Motor Efficiency	95%	95%	95%
Total Treatment Pumps Specific Power kWh/kgal	10.85	10.81	10.78
CHEMICAL CONSUMPTION			
Prechlorination, mg/L	2	2	2
Prechlorination, lbs/day	1960	1820	1670
Dechlorination, mg/L	4.6	4.6	4.6
Dechlorination, lbs/day	4510	4170	3840
Ferric Chloride, mg/L	10	10	10
Ferric Chloride, lbs/day	9800	9060	8330
Filter Aid, mg/L			
Filter Aid, lbs/day	0	0	0
Lime, mg/L	44	44	44
Lime, lbs/day	18320	18320	18320
Carbon Dioxide, mg/L	16	16	16
Carbon Dioxide, lbs/day	6670	6670	6670
Chlorine (Disinfection), mg/L	1.5	1.5	1.5
Chlorine (Disinfection), lbs/day	630	630	630
MISC. UNITS			
Cartridge Filter Loading Rate, gpm/10-inch	4	4	4
Cartridge Filter Length, inches/filter	40	40	40
No. of Cartridge Filters, No.	5200	4800	4400
Cartridge Filter Replacement Frequency, Hours	1000	1000	1000
RO Element Membrane Area, Ft2	400	400	400
RO Elements Per Vessel, No.	7	7	7
No. of Vessels per Train	397	397	397
No. of Trains	6	6	6
No. of Membranes	16667	16667	16667
Membrane Life, Years	6.25	5.75	5.25
Clean in Place Frequency, Times Per Year	6	6	6
Clean in Place Cost, $ per cleaning	$ 15,000	$ 15,000	$ 15,000
Labor, No. of Operators	25	25	25

OPERATIONS COST SUMMARY

	Scenario 1	Scenario 2	Scenario 3
Flux, GFD	7.5	7.5	7.5
Recovery	42.5%	46.0%	50%
POWER COSTS			
Raw Water Pumping, $/yr	$ 2,699,832	$ 2,494,264	$ 2,294,828
Filtered Water Pumping, $/yr	$ 1,417,368	$ 1,309,620	$ 1,204,792
RO/PX Booster Pumping, $/yr	$ 9,555,875	$ 9,818,296	$ 10,080,716
Permaete Lift Pumping, $/yr	$ 229,512	$ 229,512	$ 229,512
Finished Water Pumping, $/yr	$ 1,147,560	$ 1,147,560	$ 1,147,560
CHEMICAL COSTS			
Prechlorination, $/yr	$ 815,556	$ 757,302	$ 694,887
Dechlorination, $/yr	$ 469,153	$ 433,784	$ 399,456
Ferric Chloride, $/yr	$ 577,686	$ 534,064	$ 491,033
Filter Aid, $/yr	$ -	$ -	$ -
Lime, $/yr	$ 317,623	$ 317,623	$ 317,623
Carbon Dioxide, $/yr	$ 92,513	$ 92,513	$ 92,513
Chlorine (Disinfection), $/yr	$ 262,143	$ 262,143	$ 262,143
Dewatering Chemicals, $/yr	$ 283,000	$ 261,500	$ 240,000
MISC UNITS			
Media Filter Backwash	$ 52,535	$ 49,800	$ 47,025
Media Filter O&M (Media Loss)	$ 596,125	$ 559,000	$ 521,455
Cartridge Filters, $/yr	$ 865,488	$ 798,912	$ 732,336
Membrane Replacement, $/yr	$ 1,333,333	$ 1,449,275	$ 1,587,302
Clean-in-Place, $/yr	$ 90,000	$ 90,000	$ 90,000
Solids Disposal	$ 1,106,000	$ 1,023,000	$ 940,000
Maintenance, $/yr	3,884,283	3,759,748	3,630,907
Misc Expenses (e.g., Utilities)	$ 606,022	$ 588,183	$ 571,084
Labor, $/yr	$ 1,375,000	$ 1,375,000	$ 1,375,000
TOTAL O&M COST			
$/year	$ 27,776,606	$ 27,351,099	$ 26,950,171
$/kgal	$1.60	$1.58	$1.55

CAPITAL COST SUMMARY

		1995	2006
	ENR CCI	5524.15	7629.95
	Scenario 1	Scenario 2	Scenario 3
Flux, GFD	7.5	7.5	7.5
Recovery	42.5%	46.0%	50%
Intake/Intake Pump Station	$ 7,500,000	$ 7,200,000	$ 6,900,000
Prechlorination System	$ 453,200	$ 429,000	$ 404,100
Dechlorination System	$ 475,000	$ 463,000	$ 450,000
Ferric Chloride System	$ 4,868,900	$ 4,065,000	$ 3,261,500
Filter Aid System	$ -	$ -	$ -
Prefiltration	$ 12,093,300	$ 11,278,800	$ 10,464,300
Sand	$ 409,400	$ 378,800	$ 348,100
Anthracite	$ 428,000	$ 396,000	$ 364,000
Garnet	$ 1,290,300	$ 1,193,700	$ 1,097,100
Prefiltration Backwash System	$ 5,604,800	$ 5,265,600	$ 4,926,400
Dewatering Equipment	$ 13,500,000	$ 12,750,000	$ 12,000,000
Filtered Water Lift Station	$ 6,000,000	$ 5,700,000	$ 5,400,000
RO Membranes	$ 8,333,333	$ 8,333,333	$ 8,333,333
RO Skids	$ 19,047,619	$ 19,047,619	$ 19,047,619
RO HP Pumps	$ 2,370,000	$ 2,370,000	$ 2,370,000
PX Booster Pumps	$ 1,200,000	$ 1,200,000	$ 1,200,000
Energy Recovery	$ 5,167,484	$ 4,483,696	$ 3,819,444
Building	$ 22,353,400	$ 22,353,400	$ 22,353,400
Electrical	$ 16,324,732	$ 15,780,318	$ 15,217,080
Instrumentation/Control	13,603,944	13,150,265	12,680,900
Transfer Pump Station	$ 458,300	$ 458,300	$ 458,300
Permeate Flush System	$ 248,700	$ 248,700	$ 248,700
Process Piping	$ 5,524,800	$ 5,524,800	$ 5,524,800
Yard Piping	$ 1,558,900	$ 1,558,900	$ 1,558,900
Cartridge Filters	$ 5,250,000	$ 4,900,000	$ 4,375,000
Clean-in-Place System	$ 200,000	$ 200,000	$ 200,000
Lime System	$ 383,700	$ 383,700	$ 383,700
Carbon Dioxide System	$ 1,122,000	$ 1,122,000	$ 1,122,000
Chlorination System	$ 1,000,000	$ 1,000,000	$ 1,000,000
Ground Storage Tank	$ 3,000,000	$ 3,000,000	$ 3,000,000
High Service Pumping Station	$ 2,400,000	$ 2,400,000	$ 2,400,000
Site Work	$ 3,798,300	$ 3,798,300	$ 3,798,300
Subtotal	$165,968,112	$160,433,231	$ 154,706,976
Engineering & CM (25%)	$ 41,492,028	$ 40,108,308	$ 38,676,744
Permitting	$ 10,000,000	$ 10,000,000	$ 10,000,000
Contractor Overhead & Profit (10%)	$ 16,596,811	$ 16,043,323	$ 15,470,698
Contingencies (15%)	$ 24,895,217	$ 24,064,985	$ 23,206,046
Total Capital Cost	$258,952,168	$250,649,846	$ 242,060,464

Plant Utilization Factor	95%

	Scenario 1	Scenario 2	Scenario 3
Flux, GFD	6	6	6
Recovery	42.5%	46.0%	50%
Raw Water Flow, MGD	117.6	108.7	100.0
Finished Water Flow, MGD	50	50	50
PUMPING POWER			
Raw Water Pumping TDH, ft H2O	200	200	200
Raw Water Pumping Efficiency	80%	80%	80%
Raw Water Pumping Power, kW-hr	92,460	85,420	78,590
Filtered Water Lift Pumping TDH, ft H2O	105	105	105
Filtered Water Lift Pump Efficiency	80%	80%	80%
Filtered Water Lift Pump Power, kW-hr	48,540	44,850	41,260
RO/PX Booster Pump Specific Power, kW-hr/kgal	6.47	6.70	7.00
RO/PX Booster Pump Power, kW-hr/day	323660	335010	350150
Permeate Lift Pumping TDH, ft H2O	40	40	40
Permeate Lift Pumping Efficiency	80%	80%	80%
Permeate Lift Pumping Power, kW-hr	7,860	7,860	7,860
Finished Water Pumping TDH, ft H2O	200	200	200
Finished Water Pumping Efficiency	80%	80%	80%
Finished Water Pumping Power, kW-hr	39,300	39,300	39,300
Motor Efficiency	95%	95%	95%
Total Treatment Pumps Specific Power kWh/kgal	10.43	10.44	10.52
CHEMICAL CONSUMPTION			
Prechlorination, mg/L	2	2	2
Prechlorination, lbs/day	1960	1820	1670
Dechlorination, mg/L	4.6	4.6	4.6
Dechlorination, lbs/day	4510	4170	3840
Ferric Chloride, mg/L	10	10	10
Ferric Chloride, lbs/day	9800	9060	8330
Filter Aid, mg/L			
Filter Aid, lbs/day	0	0	0
Lime, mg/L	44	44	44
Lime, lbs/day	18320	18320	18320
Carbon Dioxide, mg/L	16	16	16
Carbon Dioxide, lbs/day	6670	6670	6670
Chlorine (Disinfection), mg/L	1.5	1.5	1.5
Chlorine (Disinfection), lbs/day	630	630	630
MISC. UNITS			
Cartridge Filter Loading Rate, gpm/10-inch	4	4	4
Cartridge Filter Length, inches/filter	40	40	40
No. of Cartridge Filters, No.	5200	4800	4400
Cartridge Filter Replacement Frequency, Hours	1000	1000	1000
RO Element Membrane Area, Ft2	400	400	400
RO Elements Per Vessel, No.	7	7	7
No. of Vessels per Train	496	496	496
No. of Trains	6	6	6
No. of Membranes	20833	20833	20833
Membrane Life, Years	6.5	6	5.5
Clean in Place Frequency, Times Per Year	6	6	6
Clean in Place Cost, $ per cleaning	$ 15,000	$ 15,000	$ 15,000
Labor, No. of Operators	25	25	25

OPERATIONS COST SUMMARY

	Scenario 1	Scenario 2	Scenario 3
Flux, GFD	6	6	6
Recovery	42.5%	46.0%	50%
POWER COSTS			
Raw Water Pumping, $/yr	$ 2,699,832	$ 2,494,264	$ 2,294,828
Filtered Water Pumping, $/yr	$ 1,417,368	$ 1,309,620	$ 1,204,792
RO/PX Booster Pumping, $/yr	$ 8,978,328	$ 9,293,177	$ 9,713,161
Permeate Lift Pumping, $/yr	$ 229,512	$ 229,512	$ 229,512
Finished Water Pumping, $/yr	$ 1,147,560	$ 1,147,560	$ 1,147,560
CHEMICAL COSTS			
Prechlorination, $/yr	$ 815,556	$ 757,302	$ 694,887
Dechlorination, $/yr	$ 469,153	$ 433,784	$ 399,456
Ferric Chloride, $/yr	$ 577,686	$ 534,064	$ 491,033
Filter Aid, $/yr	$ -	$ -	$ -
Lime, $/yr	$ 317,623	$ 317,623	$ 317,623
Carbon Dioxide, $/yr	$ 92,513	$ 92,513	$ 92,513
Chlorine (Disinfection), $/yr	$ 262,143	$ 262,143	$ 262,143
Dewatering Chemicals, $/yr	$ 283,000	$ 261,500	$ 240,000
MISC UNITS			
Media Filter Backwash	$ 52,535	$ 49,780	$ 47,025
Media Filter O&M (Media Loss)	$ 596,125	$ 558,790	$ 521,455
Cartridge Filters, $/yr	$ 865,488	$ 798,912	$ 732,336
Membrane Replacement, $/yr	$ 1,602,564	$ 1,736,111	$ 1,893,939
Clean-in-Place, $/yr	$ 90,000	$ 90,000	$ 90,000
Solids Disposal	$ 1,106,000	$ 1,023,000	$ 940,000
Maintenance, $/yr	4,051,622	3,927,060	3,798,246
Misc Expenses (e.g., Utilities)	$ 627,850	$ 610,879	$ 594,783
Labor, $/yr	$ 1,375,000	$ 1,375,000	$ 1,375,000
TOTAL O&M COST			
$/year	$ 27,657,458	$ 27,302,595	$ 27,080,292
$/kgal	$1.60	$1.57	$1.56

CAPITAL COST SUMMARY

		1995	2006
	ENR CCI	5524.15	7629.95
	Scenario 1	Scenario 2	Scenario 3
Flux, GFD	6	6	6
Recovery	42.5%	46.0%	50%
Intake/Intake Pump Station	$ 7,500,000	$ 7,200,000	$ 6,900,000
Prechlorination System	$ 453,200	$ 428,650	$ 404,100
Dechlorination System	$ 475,000	$ 462,500	$ 450,000
Ferric Chloride System	$ 4,868,900	$ 4,065,520	$ 3,261,500
Filter Aid System	$ -	$ -	$ -
Prefiltration	$ 12,093,300	$ 11,278,800	$ 10,464,300
Sand	$ 409,400	$ 378,750	$ 348,100
Anthracite	$ 428,000	$ 396,000	$ 364,000
Garnet	$ 1,290,300	$ 1,193,700	$ 1,097,100
Prefiltration Backwash System	$ 5,604,800	$ 5,265,000	$ 4,926,400
Dewatering Equipment	$ 13,500,000	$ 12,750,000	$ 12,000,000
Filtered Water Lift Station	$ 6,000,000	$ 5,700,000	$ 5,400,000
RO Membranes	$ 10,416,667	$ 10,416,667	$ 10,416,667
RO Skids	$ 23,809,524	$ 23,809,524	$ 23,809,524
RO HP Pumps	$ 2,370,000	$ 2,370,000	$ 2,370,000
PX Booster Pumps	$ 1,200,000	$ 1,200,000	$ 1,200,000
Energy Recovery	$ 5,167,484	$ 4,483,696	$ 3,819,444
Building	$ 22,353,400	$ 22,353,400	$ 22,353,400
Electrical	$ 17,056,269	$ 16,511,737	$ 15,948,616
Instrumentation/Control	14,213,557	13,759,781	13,290,513
Transfer Pump Station	$ 458,300	$ 458,300	$ 458,300
Permeate Flush System	$ 248,700	$ 248,700	$ 248,700
Process Piping	$ 5,524,800	$ 5,524,800	$ 5,524,800
Yard Piping	$ 1,558,900	$ 1,558,900	$ 1,558,900
Cartridge Filters	$ 5,250,000	$ 4,900,000	$ 4,375,000
Clean-in-Place System	$ 200,000	$ 200,000	$ 200,000
Lime System	$ 383,700	$ 383,700	$ 383,700
Carbon Dioxide System	$ 1,122,000	$ 1,122,000	$ 1,122,000
Chlorination System	$ 250,900	$ 250,900	$ 250,900
Ground Storage Tank	$ 3,000,000	$ 3,000,000	$ 3,000,000
High Service Pumping Station	$ 2,400,000	$ 2,400,000	$ 2,400,000
Site Work	$ 3,798,300	$ 3,798,300	$ 3,798,300
Subtotal	$ 173,405,400	$ 167,869,323	$ 162,144,265
Engineering & CM (25%)	$ 43,351,350	$ 41,967,331	$ 40,536,066
Permitting	$ 10,000,000	$ 10,000,000	$ 10,000,000
Contractor Overhead & Profit (10%)	$ 17,340,540	$ 16,786,932	$ 16,214,426
Contingencies (15%)	$ 26,010,810	$ 25,180,399	$ 24,321,640
Total Capital Cost	$ 270,108,101	$ 261,803,985	$ 253,216,397

10 GFD Detailed Costs

Plant Utilization Factor	95%

	Scenario 1	Scenario 2	Scenario 3
Flux, GFD	10	10	10
Recovery	42.5%	46.0%	50%
Raw Water Flow, MGD	118	109	100
Finished Water Flow, MGD	50	50	50
PUMPING POWER			
Raw Water Pumping TDH, ft H2O	200	200	200
Raw Water Pumping Efficiency	80%	80%	80%
Raw Water Pumping Power, kW-hr	92,460	85,420	78,590
Filtered Water Lift Pumping TDH, ft H2O	105	105	105
Filtered Water Lift Pump Efficiency	80%	80%	80%
Filtered Water Lift Pump Power, kW-hr	48,540	44,850	41,260
RO/PX Booster Pump Specific Power, kW-hr/kgal	7.50	7.61	7.80
RO/PX Booster Pump Power, kW-hr/day	374760	380440	389900
Permeate Lift Pumping TDH, ft H2O	40	40	40
Permeate Lift Pumping Efficiency	80%	80%	80%
Permeate Lift Pumping Power, kW-hr	7,860	7,860	7,860
Finished Water Pumping TDH, ft H2O	200	200	200
Finished Water Pumping Efficiency	80%	80%	80%
Finished Water Pumping Power, kW-hr	39,300	39,300	39,300
Motor Efficiency	95%	95%	95%
Total Treatment Pumps Specific Power kWh/kgal	11.46	11.34	11.31
CHEMICAL CONSUMPTION			
Prechlorination, mg/L	2	2	2
Prechlorination, lbs/day	1960	1820	1670
Dechlorination, mg/L	4.6	4.6	4.6
Dechlorination, lbs/day	4510	4170	3840
Ferric Chloride, mg/L	10	10	10
Ferric Chloride, lbs/day	9800	9060	8330
Filter Aid, mg/L			
Filter Aid, lbs/day	0	0	0
Lime, mg/L	44	44	44
Lime, lbs/day	18320	18320	18320
Carbon Dioxide, mg/L	16	16	16
Carbon Dioxide, lbs/day	6670	6670	6670
Chlorine (Disinfection), mg/L	1.5	1.5	1.5
Chlorine (Disinfection), lbs/day	630	630	630
MISC. UNITS			
Cartridge Filter Loading Rate, gpm/10-inch	4	4	4
Cartridge Filter Length, inches/filter	40	40	40
No. of Cartridge Filters, No.	5200	4800	4400
Cartridge Filter Replacement Frequency, Hours	1000	1000	1000
RO Element Membrane Area, Ft2	400	400	400
RO Elements Per Vessel, No.	7	7	7
No. of Vessels per Train	298	298	298
No. of Trains	6	6	6
No. of Membranes	12500	12500	12500
Membrane Life, Years	5.75	5.25	4.75
Clean in Place Frequency, Times Per Year	6	6	6
Clean in Place Cost, $ per cleaning	$ 15,000	$ 15,000	$ 15,000
Labor, No. of Operators	25	25	25

OPERATIONS COST SUMMARY			
	Scenario 1	**Scenario 2**	**Scenario 3**
Flux, GFD	10	10	10
Recovery	42.5%	46.0%	50%
POWER COSTS			
Raw Water Pumping, $/yr	$ 2,699,832	$ 2,494,264	$ 2,294,828
Filtered Water Pumping, $/yr	$ 1,417,368	$ 1,309,620	$ 1,204,792
RO/PX Booster Pumping, $/yr	$ 10,395,842	$ 10,553,406	$ 10,815,826
Permeate Lift Pumping, $/yr	$ 229,512	$ 229,512	$ 229,512
Finished Water Pumping, $/yr	$ 1,147,560	$ 1,147,560	$ 1,147,560
CHEMICAL COSTS			
Prechlorination, $/yr	$ 815,556	$ 757,302	$ 694,887
Dechlorination, $/yr	$ 469,153	$ 433,784	$ 399,456
Ferric Chloride, $/yr	$ 577,686	$ 534,064	$ 491,033
Filter Aid, $/yr	$ -	$ -	$ -
Lime, $/yr	$ 317,623	$ 317,623	$ 317,623
Carbon Dioxide, $/yr	$ 92,513	$ 92,513	$ 92,513
Chlorine (Disinfection), $/yr	$ 262,143	$ 262,143	$ 262,143
Dewatering Chemicals, $/yr	$ 283,000	$ 261,500	$ 240,000
MISC UNITS			
Media Filter Backwash	$ 52,535	$ 49,900	$ 47,025
Media Filter O&M (Media Loss)	$ 596,125	$ 558,800	$ 521,455
Cartridge Filters, $/yr	$ 865,488	$ 798,912	$ 732,336
Membrane Replacement, $/yr	$ 1,086,957	$ 1,190,476	$ 1,315,789
Clean-in-Place, $/yr	$ 90,000	$ 90,000	$ 90,000
Solids Disposal	$ 1,106,000	$ 1,023,000	$ 940,000
Maintenance, $/yr	3,696,381	3,571,829	3,443,005
Misc Expenses (e.g., Utilities)	$ 584,308	$ 565,842	$ 548,113
Labor, $/yr	$ 1,375,000	$ 1,375,000	$ 1,375,000
TOTAL O&M COST			
$/year	$ 28,160,581	$ 27,617,051	$ 27,202,896
$/kgal	$1.62	$1.59	$1.57

CAPITAL COST SUMMARY		1995	2006
	ENR CCI	5524.15	7629.95
	Scenario 1	**Scenario 2**	**Scenario 3**
Flux, GFD	9	9	9
Recovery	42.5%	46.0%	50%
Intake/Intake Pump Station	$ 7,500,000	$ 7,200,000	$ 6,900,000
Prechlorination System	$ 453,200	$ 428,700	$ 404,100
Dechlorination System	$ 475,000	$ 462,500	$ 450,000
Ferric Chloride System	$ 4,868,900	$ 4,065,200	$ 3,261,500
Filter Aid System	$ -		$ -
Prefiltration	$ 12,093,300	$ 11,278,800	$ 10,464,300
Sand	$ 409,400	$ 378,800	$ 348,100
Anthracite	$ 428,000	$ 396,000	$ 364,000
Garnet	$ 1,290,300	$ 1,193,700	$ 1,097,100
Prefiltration Backwash System	$ 5,604,800	$ 5,265,600	$ 4,926,400
Dewatering Equipment	$ 13,500,000	$ 12,750,000	$ 12,000,000
Filtered Water Lift Station	$ 6,000,000	$ 5,700,000	$ 5,400,000
RO Membranes	$ 6,250,000	$ 6,250,000	$ 6,250,000
RO Skids	$ 14,285,714	$ 14,285,714	$ 14,285,714
RO HP Pumps	$ 2,370,000	$ 2,370,000	$ 2,370,000
PX Booster Pumps	$ 1,200,000	$ 1,200,000	$ 1,200,000
Energy Recovery	$ 5,167,484	$ 4,483,696	$ 3,819,444
Building	$ 22,353,400	$ 22,353,400	$ 22,353,400
Electrical	$ 15,503,304	$ 14,958,817	$ 14,395,651
Instrumentation/Control	12,919,420	12,465,681	11,996,376
Transfer Pump Station	$ 458,300	$ 458,300	$ 458,300
Permeate Flush System	$ 248,700	$ 248,700	$ 248,700
Process Piping	$ 5,524,800	$ 5,524,800	$ 5,524,800
Yard Piping	$ 1,558,900	$ 1,558,900	$ 1,558,900
Cartridge Filters	$ 5,250,000	$ 4,900,000	$ 4,375,000
Clean-in-Place System	$ 200,000	$ 200,000	$ 200,000
Lime System	$ 383,700	$ 383,700	$ 383,700
Carbon Dioxide System	$ 1,122,000	$ 1,122,000	$ 1,122,000
Chlorination System	$ 1,000,000	$ 1,000,000	$ 1,000,000
Ground Storage Tank	$ 3,000,000	$ 3,000,000	$ 3,000,000
High Service Pumping Station	$ 2,400,000	$ 2,400,000	$ 2,400,000
Site Work	$ 3,798,300	$ 3,798,300	$ 3,798,300
Subtotal	$ 157,616,921	$ 152,081,308	$ 146,355,786
Engineering & CM (25%)	$ 39,404,230	$ 38,020,327	$ 36,588,946
Permitting	$ 10,000,000	$ 10,000,000	$ 10,000,000
Contractor Overhead & Profit (10%)	$ 15,761,692	$ 15,208,131	$ 14,635,579
Contingencies (15%)	$ 23,642,538	$ 22,812,196	$ 21,953,368
Total Capital Cost	$ 246,425,382	$ 238,121,962	$ 229,533,678

Unit Cost Assumptions

Chlorine	$1.20	per pound
Sodium Bisulfite	$0.30	per pound
Ferric Chloride	$0.17	per pound
Filter Aid		per pound
Lime	$0.05	per pound
Carbon Dioxide	$0.04	per pound
Power	$0.08	per kW-hr
Cartridge Filters	$20	each
Membranes	$500	each
Labor	$55,000	per year
RO Vessels	$8,000	each

Demineralization of High Salinity Brackish Groundwater Using Seawater Technology

Brandon Yallaly, P.E., Tom Seacord, P.E., Steve Messner

Abstract

Collier County's North County Regional Water Treatment Plant (NCRWTP) is a combined nanofiltration (NF)/reverse osmosis (RO) treatment facility, with design production capacity of 20-mgd (12-mgd NF, 8-mgd RO). The RO portion of the NCRWTP treats brackish water from 11 wells in the Lower Hawthorne Aquifer. Since their construction in 1998, 4 of the 11 wells have experienced increased total dissolved solids (TDS). The chloride concentrations in these four wells increased from a range of 2,000-3,000 mg/L to 6,000-10,000 mg/L by 2002, rendering them useless to the existing low pressure RO system.

The production loss from these wells allows the NCRWTP to marginally meet the 11-mgd raw water required for the RO portion of the treatment system by eliminating available redundancy. Additional wells are planned for the future to improve the raw water supply capability; however, the prospect of abandoning four highly productive, permitted, and relatively new wells is not favorable. Instead, the concept of independently treating the raw water from the high salinity wells was investigated.

Treating high salinity groundwater using seawater RO (SWRO) technology is a new concept in Florida. In theory, this scenario presents an ideal application for SWRO technology because of the high quality of the groundwater with respect to silt density index (SDI) and turbidity and the history of successful treatment of water from the Lower Hawthorne Aquifer by RO. However, the absence of past experience with SWRO technology and the potential for unforeseeable treatment challenges warranted demonstration testing.

The objectives for this RO demonstration study were three-fold:

- Verify treatability of high salinity Lower Hawthorne groundwater with SWRO technology and minimal pretreatment (5-micron filtration and scale inhibitor only)
- Develop energy use, chemical consumption, and cleaning interval data to estimate operational costs and establish full-scale design criteria
- Familiarize Collier County operations staff with isobaric energy recovery technology.

This paper discusses the application of the latest seawater technology for the treatment of highly brackish groundwater in Florida. Included is information on the development of the demonstration testing protocol, establishment of the most economical design recovery and flux rates, and the performance of the low energy seawater membranes and isobaric energy recovery devices. Operational data from the demonstration study will be presented, including

operating pressures, water quality, and energy usage. This paper serves as a roadmap to other utilities who are suffering from a reduction in potable water supply due to salt water intrusion and provides concrete evidence that the latest seawater technology and design concepts significantly lower the cost of treating high salinity water.

1. INTRODUCTION

1.1. Background

The North County Regional Water Treatment Plant (NCRWTP) is a combined nanofiltration (NF)/reverse osmosis (RO) treatment facility, with design production capacity of 20-mgd (12-mgd NF, 8-mgd RO). The RO portion of the NCRWTP treats brackish water from 11 wells that tap the Lower Hawthorne Aquifer. Since their construction in 1998, 4 of the 11 wells (RO-1N through RO-4N) have experienced increases in the total dissolved solids (TDS). The chloride concentrations in these four wells increased from a range of 2,000-3,000 mg/L to 6,000 to 10,000 mg/L by 2002, rendering them useless to the existing low pressure RO systems at the NCRWTP.

The production loss from these wells allows the NCRWTP to marginally meet the 11-mgd raw water requirement for the RO portion of the treatment system at the cost of eliminating any available redundancy. Additional wells are planned for the future to improve the raw water supply capability; however, the prospect of abandoning four highly productive, permitted, and relatively new wells is not favorable. Instead, the concept of independently treating the raw water from wells RO-1N through RO-4N was being investigated.

1.2. Demonstration Study Objectives

Treating high salinity groundwater using seawater RO (SWRO) technology is a new concept in the state of Florida. In theory, this scenario presents an ideal application for SWRO technology because of the high quality of the groundwater with respect to silt density index (SDI), suspended solids, and turbidity and the history of successful treatment of water from the Lower Hawthorne Aquifer by RO. However, the absence of past experience with SWRO technology and the potential for unforeseeable treatment challenges warranted demonstration testing.

The objectives for the high pressure reverse osmosis (HPRO) demonstration study were three-fold:

- Verify treatability of high salinity Lower Hawthorne groundwater with SWRO technology and minimal pretreatment (5-micron filtration and the option for scale inhibitor)
- Develop energy use, chemical consumption, and cleaning interval data to estimate operational costs and establish full-scale design criteria

- Familiarize Collier County operations staff with isobaric energy recovery technology, which is currently being proposed for the Northeast Regional Water Treatment Plant.

1.3. Water quality

A summary of the raw water quality is presented in Table 1.3. The raw water quality data is derived from information presented in the *North County Regional Water Treatment Plant - High Pressure Reverse Osmosis Feasibility Study* (March 2005) for wells RO-1N through RO-3N (water quality data for RO-4N was not presented in the aforementioned study). Average values for most major ions were used to develop the design water. However, maximum values for critical parameters, specifically barium, strontium, and silica, were used as a conservative measure to evaluate scaling potential.

Table 1.3 Demonstration Scale Test Design Water Quality
HPRO DEMONSTRATION STUDY
Collier County Utilities Department

Parameter[1]	Minimum	Average	Maximum	Design
Calcium (Ca^{2+})	330	417	460	**417**
Magnesium (Mg^{2+})	510	763	900	**763**
Sodium (Na^{+})	3,400	5,200	6,100	**6068**
Potassium (K^{+})	130	213	260	**213**
Barium (Ba^{2+})	0.046	0.051	0.055	**0.055**
Strontium (Sr^{2+})	18.00	19.00	20.00	**20.0**
Iron (Fe^{2+})	0.00	0.13	0.29	**0.13**
Manganese (Mn^{2+})	0.001	0.002	0.003	**0.003**
Ammonium (NH_4^{+})	0.78	0.90	0.96	**0.90**
Bicarbonate (HCO_3^{-})	232	281	305	**281**
Sulfate (SO_4^{2-})	1,400	2,033	2,400	**2033**
Chloride (Cl^{-})	8,600	10,867	12,000	**10867**
Fluoride (F^{-})	0.0	0.1	0.2	**0.2**
Silica (SiO_2)	17.0	18.7	20.0	**20.0**
Color (units)	5.0	8.3	10.0	**10.0**
Hydrogen Sulfide	5.0	0.0	5.0	**5.0**
pH (units)	7.12	7.14	7.15	**7.14**
Alkalinity (mg/l as $CaCO_3$)	190	230	249	**230**
Hardness (mg/l as $CaCO_3$)	2,926	4,187	4,858	**4,186**
TOTAL IONS + SiO_2	14,638	19,813	22,467	**20,683**
TDS (SUM)	14,519	19,670	22,311	**20,540**
Temperature (^oF)	88	88	88	**88**
Temperature (^oC)	31	31	31	**31**
Total Ions	14,638	19,813	22,467	**20,714**
TDS by Evaporation	13,000	20,666	25,000.	**20,559**
TDS by Ion Summation	14,519	19,669	22,311	**20,547**
Evaporation/Summation Ratio	0.9	1.1	1.1	**1.00**
Ion Balance Deviation (%)	-13.5	-5.6	-3.1	**0.0**

Notes:
1. Units are in mg/L unless otherwise noted.
2. Water quality derived from *North County Regional Water Treatment Plant - High Pressure Reverse Osmosis Feasibility Study* (March 2005) for wells RO-1N through RO-3N (water quality data for RO-4N was not presented in the aforementioned study).

During the demonstration test, water quality samples were taken at regular intervals to confirm the assumed design water, which is presented in Table 1.3. Table 1.4 shows a comparison of the design water used for test protocol development versus the actual water quality experienced during the demonstration study.

Table 1.4	Demonstration Scale Test Water Quality Comparison HPRO DEMONSTRATION STUDY Collier County Utilities Department		
Parameter[1]	**Design**	**9/13/06 Sample**	**12/11/06 Sample**
Calcium (Ca^{2+})	417	410	390
Magnesium (Mg^{2+})	763	590	790
Sodium (Na^{+})	6,068	5,700	5900
Potassium (K^{+})	213	300	260
Barium (Ba^{2+})	0.055	0.050	Not Detected
Strontium (Sr^{2+})	20.0	17	18
Iron (Fe^{2+})	0.13	Not Detected	Not Detected
Manganese (Mn^{2+})	0.003	0.0029	Not Detected
Bicarbonate (HCO_3^{-})	281	293	317
Sulfate (SO_4^{2-})	2033	2100	2,800
Chloride (Cl^{-})	10,867	11,000	11,000
Fluoride (F^{-})	0.2	2.10	5.8
Silica (SiO_2)	20.0	24	24
pH (units)	7.14	6.83	6.97
Alkalinity (mg/l as $CaCO_3$)	230	240	260
Hardness (mg/l as $CaCO_3$)	4,186	3,456	4,230
TOTAL IONS + SiO_2	20,683	20,469	21,556
TDS (SUM)	20,540	20,320	21,394
TDS by Evaporation		23,100	22,800
Temperature (^{o}C)	31	31	31
Conductivity (μmhos/cm)		33,000	34,000
Empirical Factor (TDS/Conductivity)		0.62	0.63

Notes:
1. Units are in mg/L unless otherwise noted.
2. Water quality derived from *North County Regional Water Treatment Plant - High Pressure Reverse Osmosis Feasibility Study* (March 2005) for wells RO-1N through RO-3N (water quality data for RO-4N was not presented in the aforementioned study).

2. DEMONSTRATION TESTING

2.1. Process Description

Figure 2.1.1 defines the general process for the demonstration test. The equipment used consisted of full-scale components, including 8-in diameter pressure vessels and membrane elements. The demonstration skid was leased from the Affordable Desalination Collaboration.

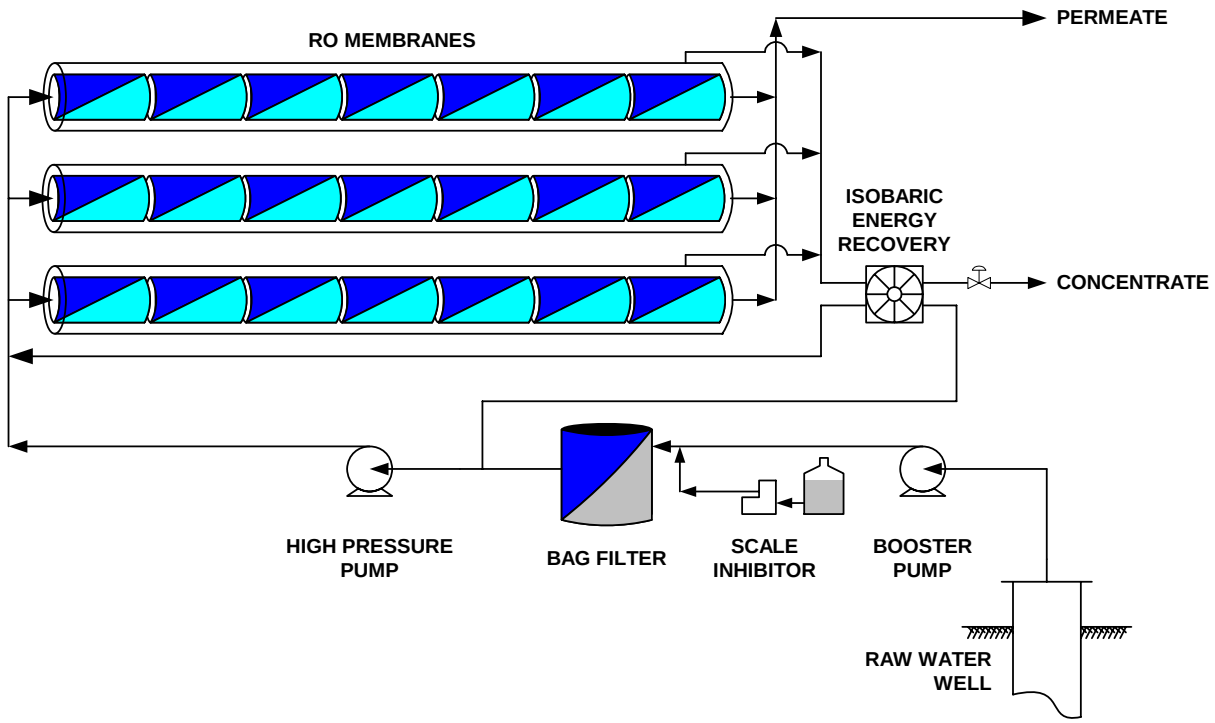

Figure 2.1.1: Demonstration Test Process Flow Diagram

2.2. Determining Operational Parameters

Prior to the demonstration study, a relative present worth value analysis was conducted to establish the most desirable operating flux and recovery parameters. The analysis included both relative capital and relative operations costs. The relative cost comparison only evaluated components that varied based on flux and recovery. The costs were developed based on the following assumptions:

- No capital cost for well construction or well pumps
- Items included in the analysis because they vary based on flux and recovery parameters
  - Capital Costs
    - Cartridge filters
    - Membrane feed pumps
    - Pressure exchangers
    - PX booster pumps
    - Pressure vessels

        - Membrane Elements
    - Operating Costs
        - Power usage
        - Chemical usage
        - Membrane Replacement
        - Cartridge Filter Replacement
- Items excluded from the analysis because they were deemed equal for all scenarios
    - Capital Costs
        - Installation and other costs (excluding equipment or material costs) for cartridge filters, feed pumps, chemical storage and feed systems, electrical system components, instrumentation components, and structural modifications (if applicable).
        - Degasification, product transfer, and high service pumping
        - Chemical storage and feed modifications
        - Instrumentation and programming modifications
        - Electrical system components and modifications
    - Operating Costs
        - Staffing and administrative costs
        - Equipment maintenance
        - Degasification and odorous air treatment
        - Product transfer and high service pumping
        - Disinfection

The criteria presented in Table 2.2.1 were the basis for the relative present value analysis. When establishing operation and maintenance costs for membrane replacements, the membrane lifespan shown in Table 2.2.2 was used to estimate yearly replacement quantities. Membrane replacement resulting from warranty maintenance by the manufacturers is not part of the replacement cost. Costs resulting from the Cumulative Annual Replacement Rates (CARR) are built into the membrane element cost by the manufacturers.

Table 2.2.1	Present Value Analysis Criteria HPRO DEMONSTRATION STUDY Collier County Utilities Department
Criteria	**Value**
Project Size	2 MGD
Capital Cost	
Pretreatment [1]	Feasibility Report
Desalination Plant [2]	Unit Costs for Pressure Vessels and Elements Used for Relative Comparison
Project Life	30 years
Bond Payment Period	30 years
Interest [3]	5%
Power Cost	$0.08 per kWh
Well Pump TDH	275 ft H_2O
Well Pump Efficiency	75%
Well Pump Motor Efficiency	93%
RO Feed Pump TDH	Based on Flux and Recovery
RO Feed Pump Efficiency	95%
RO Feed Pump Motor Efficiency	93%
PX Booster Pump TDH	Based on Flux and Recovery
PX Booster Pump Efficiency	75%
PX Booster Pump Motor Efficiency	93%
Membrane Life	See Table 2.2.2
Membrane Element Cost	$500 per element
Scale Inhibitor Cost	$0.53 per pound
Scale Inhibitor Dose	Dosage based on recovery
Sodium Hydroxide Cost (50% Solution)	$0.23 per pound
Sodium Hydroxide Dose	Dosage based on permeate quality
Cartridge Filter Loading Rate	4 gpm per 10-inches
Cartridge Filter Cost	$5 per 10-inches
Cartridge Filter Life	2000 hours

Notes:
1. Based upon 5-micron cartridge filtration pretreatment.
2. Includes costs for feed pumps, RO elements, pressure vessels, pressure exchangers and PX booster pumps.
3. Assumed interest rate.

Table 2.2.2	Membrane Replacement Schedule HPRO DEMONSTRATION STUDY Collier County Utilities Department					
	Flux					
	6 GFD		**7.5 GFD**		**9 GFD**	
Recovery	**CARR[1]**	**Membrane Life**	**CARR[1]**	**Membrane Life**	**CARR[1]**	**Membrane Life**
35%	7%	6.5 yrs	8%	6.25 yrs	9%	6 yrs
42.5%	9%	6 yrs	10%	5.75 yrs	11%	5.5 yrs
50%	11%	5.5 yrs	12%	5.25 yrs	13%	5 yrs

Notes:
1. Cumulative Annual Replacement Rate (CARR). The percentage of membrane elements that would be replaced to maintain a performance requirement (i.e., permeate quality and energy) for a 5-year warranty.

Based on the relative present value analysis, the optimum operating condition for the demonstration study was 50 percent recovery at a flux rate of 6 gallons per day per square foot

of membrane area (gfd). Pressures were based on membrane performance projections for the proposed manufacturers. The results of the present value analysis are presented in Figures 2.2.1 and 2.2.2

Figure 2.2.1 demonstrates that the optimum operating condition based on RO power usage alone is 42.5% recovery at 6 gfd. However, when raw water pumping, membrane replacement, cartridge filter replacement, and chemical usage are considered, the high recovery/low flux option becomes the most economical based on relative operations costs.

The difference in *relative* capital costs for the options evaluated was somewhat insignificant compared to the operational costs and thus did not alter the recommendation for high recovery/low flux operation. As shown in Figure 2.2.2, the addition of the relative capital cost components to the overall present value analysis reduces the difference between the relative present value costs at each recovery, but doesn't change the downward cost trend as recovery increases.

Since power costs drive the relative present worth analysis for the project, a sensitivity analysis was performed to verify that increased power costs would not impact the selected operating parameters. The relative present worth analysis was performed using power costs of $0.10, $0.12, $0.15, and $0.20 per kilowatt-hour and compared to the relative present worth results at $0.08/ per kilowatt-hour. Figure 2.2.3 shows that the selected high recovery/low flux option remains the most cost effective even if power costs increase.

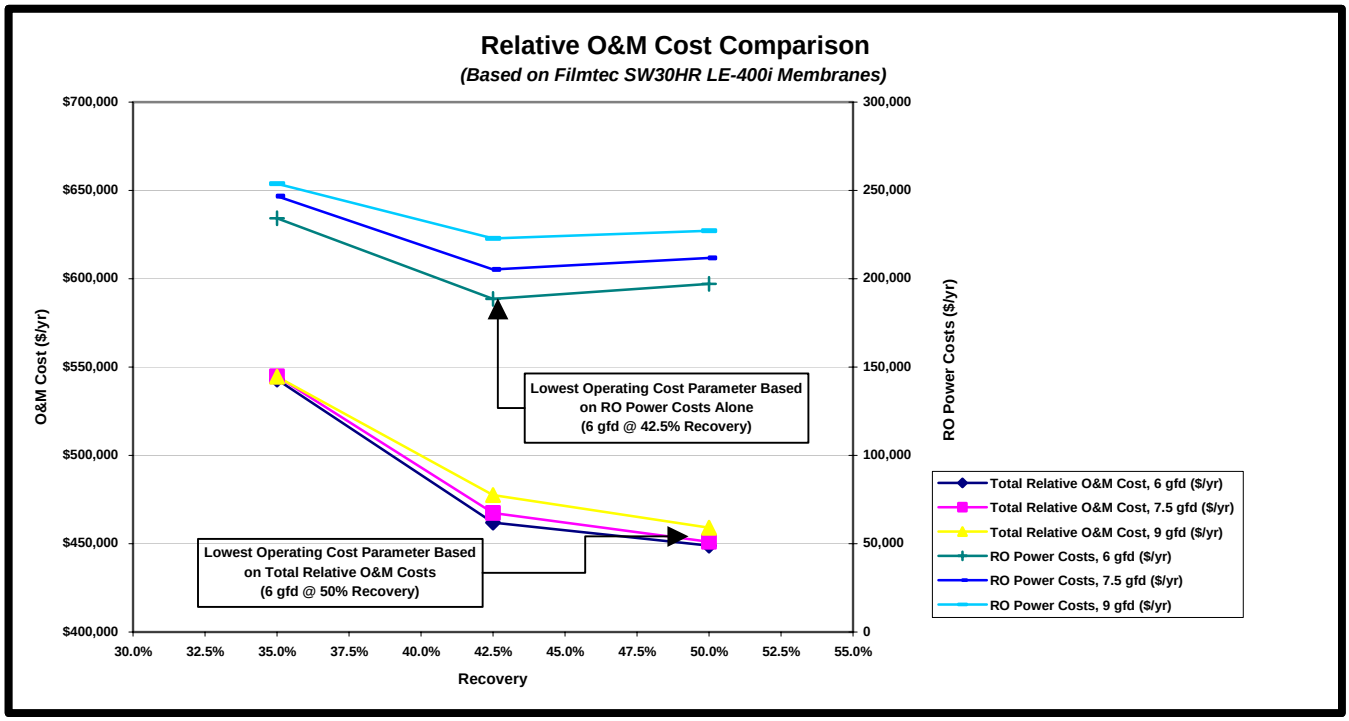

Figure 2.2.1 Relative O&M Cost Comparison

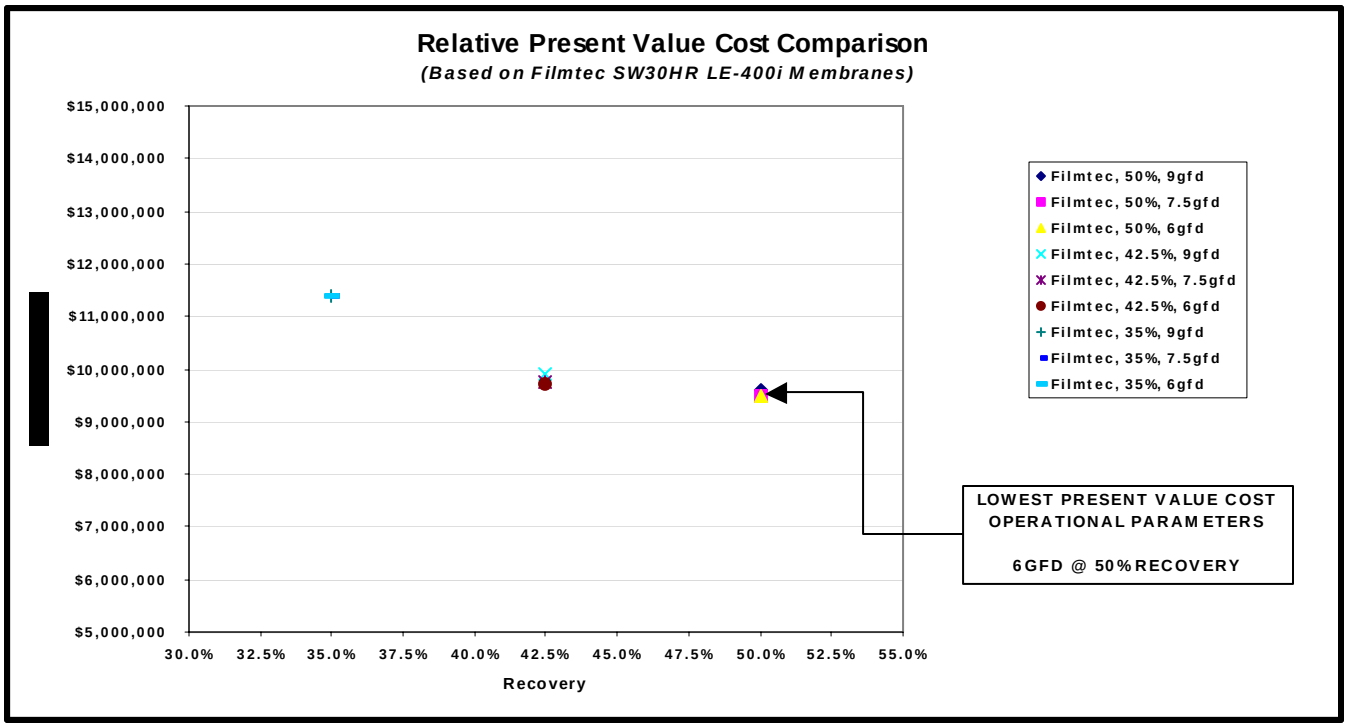

Figure 2.2.2 Relative Present Worth Cost Comparison

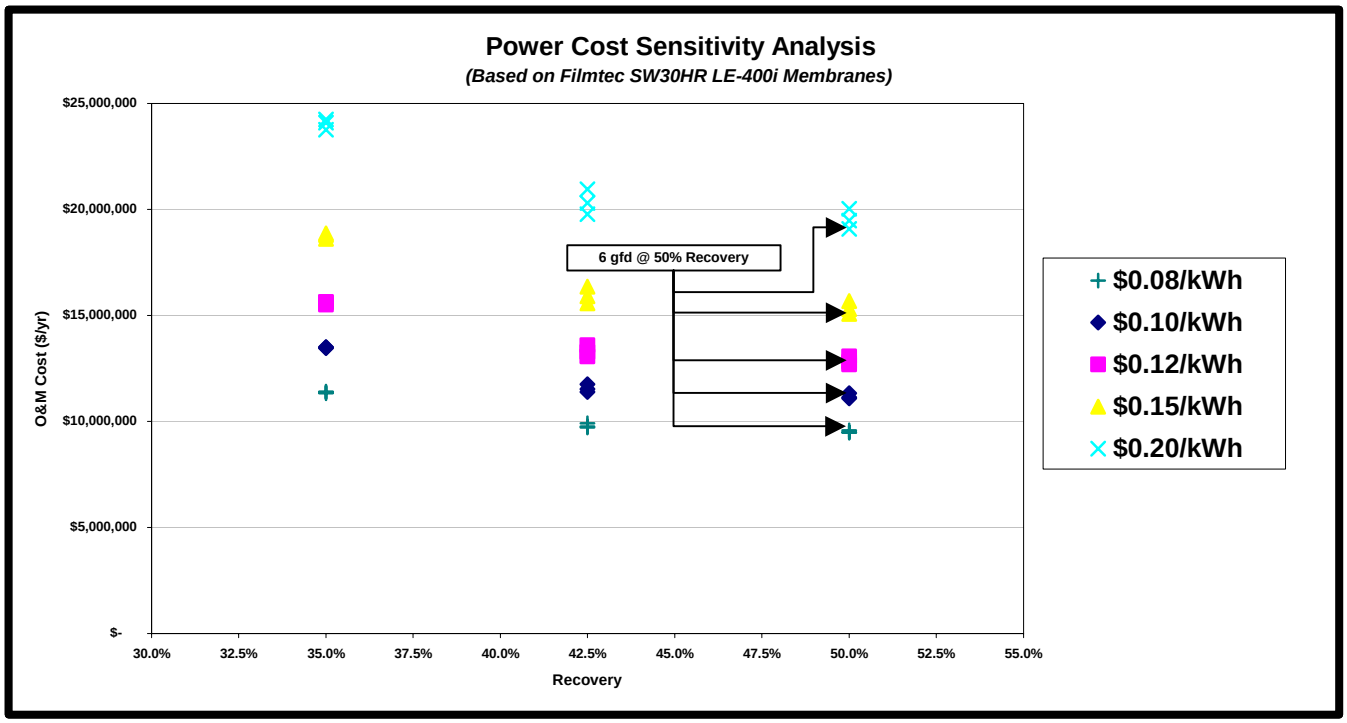

Figure 2.2.3 Power Cost Sensitivity Analysis

In addition to being the lowest cost alternatives, the selected operating parameters have other benefits, which are:

- Reduced raw water usage
- Reduced concentrate volumes for disposal
- Reduced fouling potential due to low flux operation

As a result of the low flux proposed, the possibility existed that the permeate quality would suffer relative to the high flux alternatives. Therefore, permeate quality was to be monitored during the first six weeks of the test phase and changes, such as increasing the flux, were to be made in the second part of the test phase, if required.

2.3. SWRO Demonstration Scale Testing

Three months of demonstration scale testing of the HPRO system occurred over a 6-month period (June 2006 to January 2007). The membrane tested was a Filmtec SW30HR-400*i*. Testing proceeded under the following criteria:

- Operating parameters were set based on the relative present value analysis. Testing proceeded under these operating conditions for 6 weeks.
- During the first six weeks, if excessive fouling or permeate quality becomes problematic, the membranes were to be cleaned and the flux and recovery modified to improve performance. If fouling of the membranes was not problematic and water quality acceptable, no changes were to be made for the second six weeks of testing.

3. DEMONSTRATION TEST RESULTS

3.1. Operational Data

The operational data gathered from the demonstration test, specifically pressures, water quality, and power consumption, are presented in the following sections. Power consumption rate was measured and included the following electrical loads:

- HPRO High Pressure Positive Displacement Pump
- HPRO PX Booster Pump

The following was not included in the power consumption rate measurements:

- Well Water Pump (artesian pressure was sufficient to supply the demonstration system feed boost pump during the demonstration study)
- Chemical Metering Pumps
- Instrumentation and Controls

While the feed/flush/cleaning pump was used to provide suction side pressure to the High Pressure Positive Displacement pump, thereby reducing the overall TDH, it was not be included in the power monitoring. For the recovery and flux economic analysis, the existing well pumps' horsepower was assumed based upon actual flowrates and an overall TDH of 275-ft.

Hydraulic conditions for the demonstration scale HPRO equipment at each test condition are presented in Table 3.1.1.

Table 3.1.1 Schedule of Hydraulic Testing Conditions
HPRO DEMONSTRATION STUDY
Collier County Utilities Department

Parameter	Weeks 1-6	Weeks 7-12
SW30HR LE-400*i* Conditions		
Flux, gfd	6	9
Recovery	50%	50%
RO Pump, gpm	35	52.5
PX Booster Pump, gpm	34	53.5[1]
Total Product, gpm	35	52.5
Concentrate, gpm	35	52.5

NOTE.
1. PX Booster Pump Flowrate set at 1 gpm above concentrate flowrate to minimize TDS increase in the feedwater due to mixing in the energy recovery device.

3.1.1. Permeate Quality

Permeate conductivity is presented in Figure 3.1.1.1. The normalized salt rejection and salt passage data, shown in Figure 3.1.1.2, is relatively flat throughout the duration of the study (with the exception of the last few days of the study when a clogged bag filter caused concentrate recirculation through the PX unit).

Table 3.1.1.1 shows how the permeate sampled and tested during the demonstration study compares to the quality estimated using the membrane supplier's projection software. In general, the permeate TDS measured during the demonstration study was higher than that predicted by the membrane manufacturer's projection software. Based on the quality of the permeate during the first phase of the testing, the flux rate was increased to 9 gfd for the second phase of the test. The improvement in quality was sufficient to assure that the addition of post treatment chemicals would not cause in increase in TDS beyond the 500 mg/L secondary standard and would be more compatible (with respect to TDS) with the product from the existing facility's nanofiltration and low pressure RO systems.

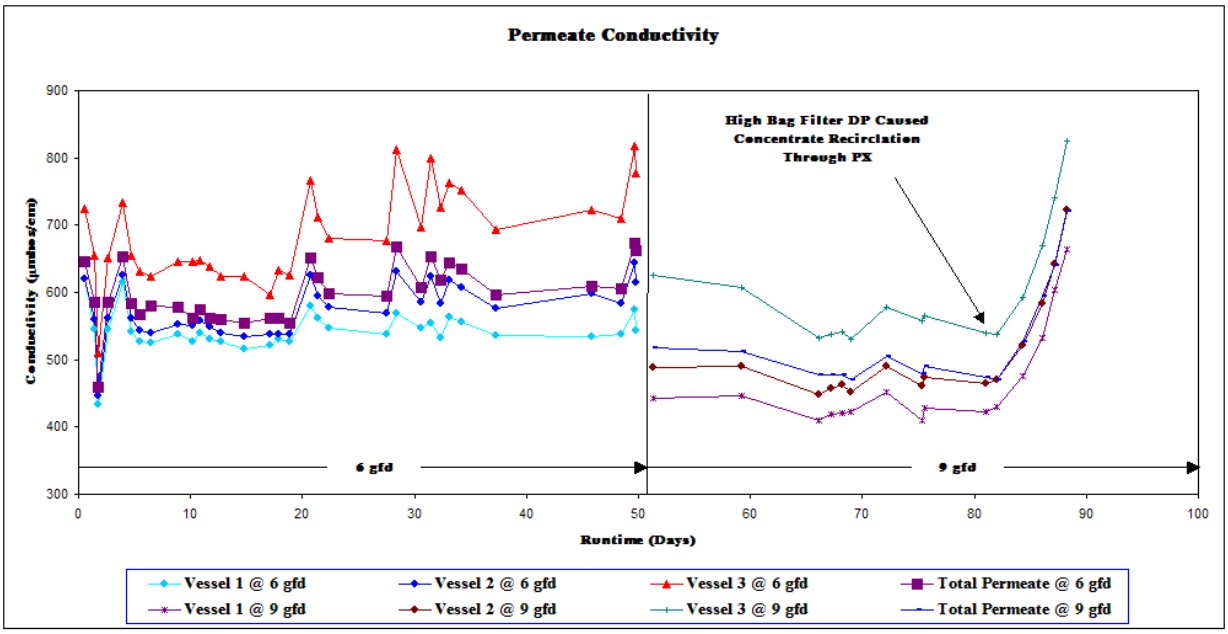

Figure 3.1.1.1: Permeate Conductivity

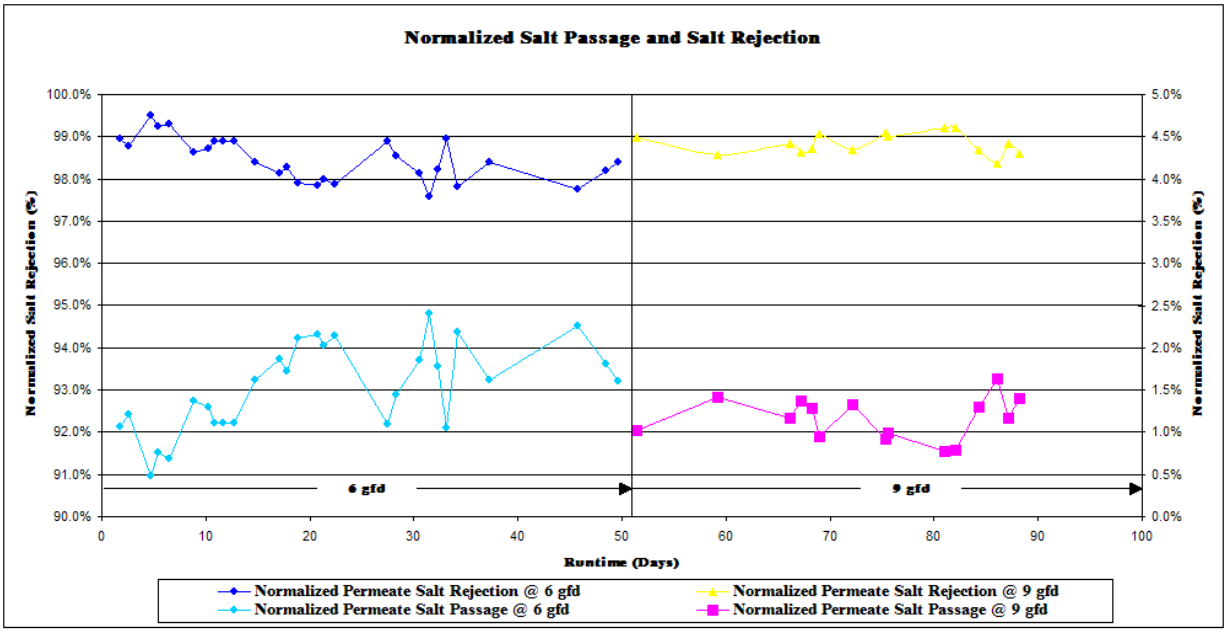

Figure 3.1.1.2: Normalized Salt Passage Data

Table 3.1.1.1 Demonstration Scale Test Permeate Water Quality Comparison
HPRO DEMONSTRATION STUDY
Collier County Utilities Department

Parameter[1]	Permeate, 6 gfd[2]			Permeate, 9 gfd[2]		
	Actual	Projected	% Difference	Actual	Projected	% Difference
Calcium (Ca^{2+})	1.5	1.2	25%	0.8	0.8	0%
Magnesium (Mg^{2+})	2.5	1.8	43%	1.2	1.6	-23%
Sodium (Na^{+})	130.0	111.4	17%	78.0	73.0	7%
Potassium (K^{+})	6.3	5.6	13%	3.5	3.2	10%
Strontium (Sr^{2+})	0.06	0.05	26%	0.0	0.0	0%
Bicarbonate (HCO_3^{-})	19.5	4.9	302%	17.1	3.7	368%
Sulfate (SO_4^{2-})	6.0	3.1	94%	3.2	2.5	26%

Table 3.1.1.1	Demonstration Scale Test Permeate Water Quality Comparison HPRO DEMONSTRATION STUDY Collier County Utilities Department					
Parameter[1]	**Permeate, 6 gfd[2]**			**Permeate, 9 gfd[2]**		
	Actual	**Projected**	**% Difference**	**Actual**	**Projected**	**% Difference**
Chloride (Cl^-)	200.0	179.0	12%	130.0	117.0	11%
Fluoride (F^-)	0.08	0.04	98%	0.1	0.1	33%
pH (units)	6.2	5.5	13%	6.2	5.5	14%
TOTAL IONS + SiO_2	367.3	307.6	19%	234.7	202.2	16%
TDS (SUM)	357.3	305.1	17%	226.0	200.3	13%

Notes:
1. Units are in mg/L unless otherwise noted.
2. Permeate quality estimated using ROSA v6.1 projection software (Filmtec®)

3.1.2. Pressures

Pressures observed during the demonstration test were consistent with the anticipated pressures from the manufacturer's projection software. Limitations on instrumentation did not allow for a look at the change in normalized differential pressure for the duration of the study, However, since temperature, recovery, and feedwater quality were very consistent throughout the study, a review of the recorded pressure data provides some insight into the fouling potential of the water.

Based on the recorded (non-normalized) data, no significant change in pressure was observed over time, which indicates that the water does not have a strong tendency to foul the membranes. The exception to this was observed during the end of the testing, when the artesian flow from the well proved inadequate to maintain positive gauge pressure on the raw water line. As a result, negative pressure was being drawn on the suction line and a slow accumulation of air in the raw water line resulted. This air caused the oxidation of hydrogen sulfide to colloidal sulfur, which subsequently fouled the bag filter. With high pressure drop across the bag filter, there was insufficient raw water pressure to maintain flushing flows through the PX unit. Since the concentrate was not completely pushed out of the chambers of the PX unit, it recycled back into the feedwater, causing a progressive increase in the feedwater TDS. This increase in TDS corresponded with the increase in feed pressure, which is illustrated Figures 3.1.2.1 and 3.1.2.2.

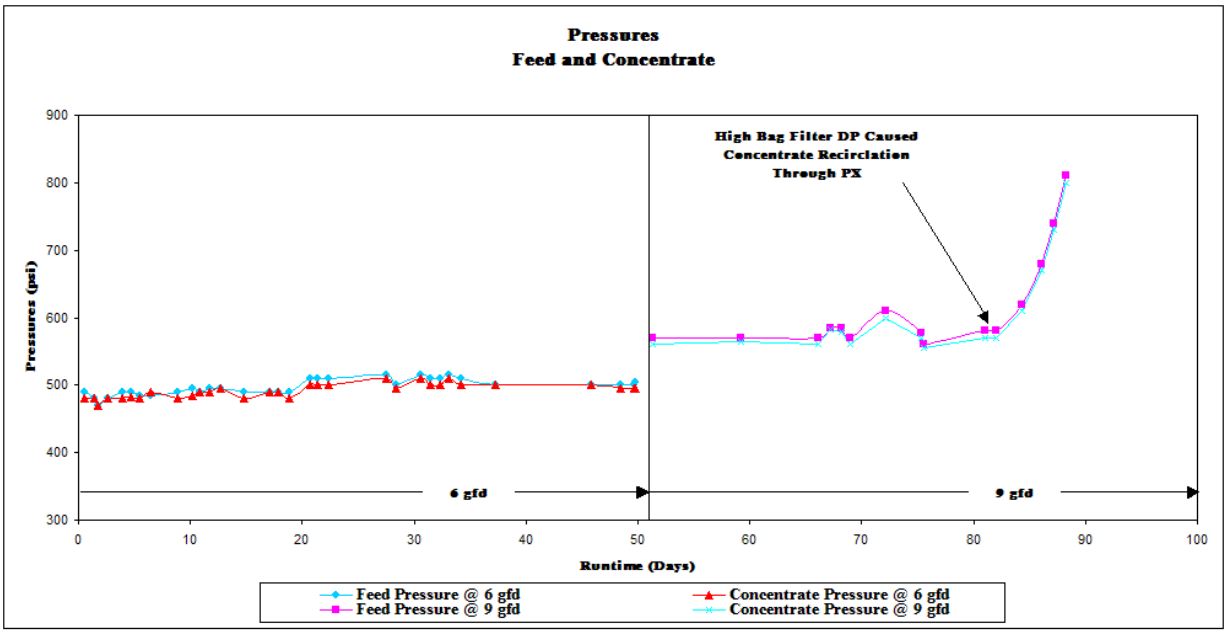

Figure 3.1.2.1 - Feed and Concentrate Pressures

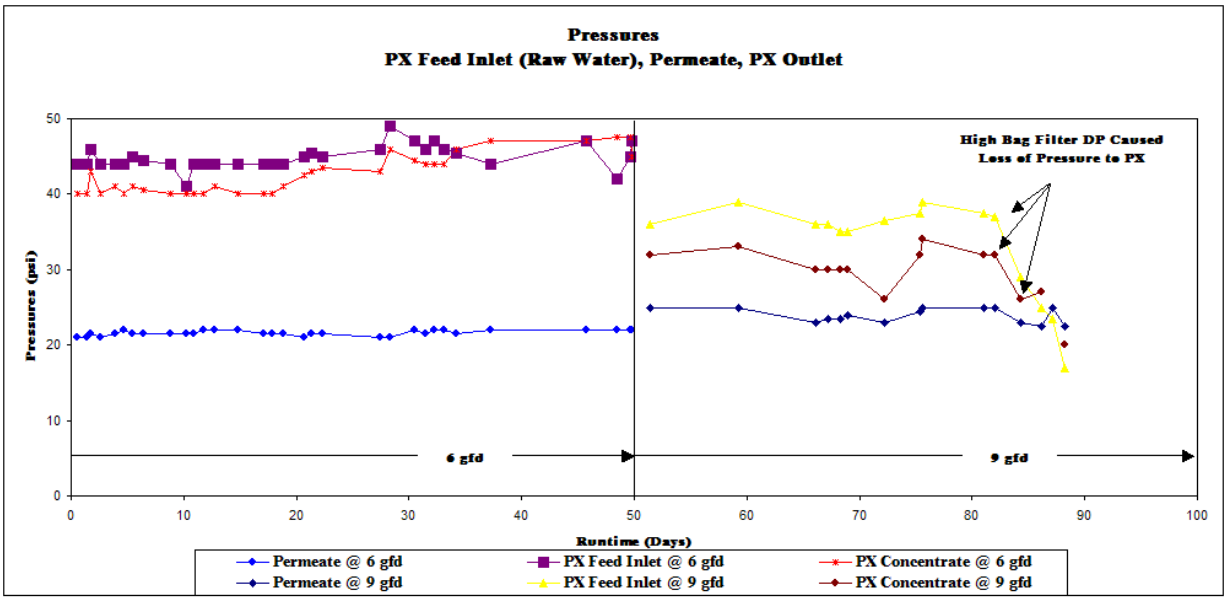

Figure 3.1.2.2 - Permeate, PX Inlet, and PX Concentrate Outlet Pressures

3.1.3. Energy Usage

Energy usage was monitored using power meters on the high pressure pump and PX boost pump. The RO power and specific energy are presented in Figure 3.1.3.1. In general, the measured specific energy was in the range of 4 to 5 kWh/kgal. In comparison, the specific energy from previous Affordable Desalination Collaboration was in the 6 to 7 kWh/kgal range. The lower energy consumption observed was expected, since the Hawthorne Aquifer

groundwater is warmer and the TDS lower than the Pacific Ocean water tested during Phase I of the ADC demonstration program.

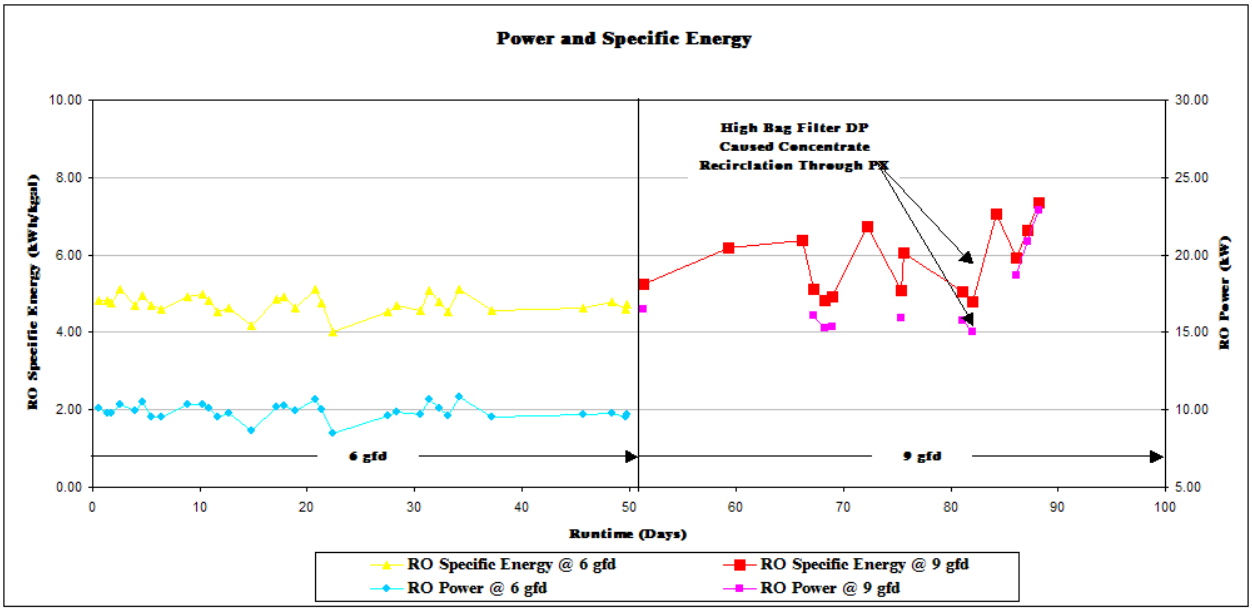

Figure 3.1.3.1 - Permeate, PX Inlet, and PX Concentrate Outlet Pressures

4. CONCLUSIONS

The results of the demonstration test confirmed that the high TDS water from the Hawthorne Aquifer is treatable using seawater RO technology. Although the preliminary economic comparison determined that low flux, high recovery operation was the most economical, the results of the demonstration test proved that higher flux rates are required to achieve the minimum permeate quality desired.

Using the data presented herein, design criteria will be developed for a 2-mgd full-scale reverse osmosis system to be installed in parallel with the existing 12-mgd membrane softening treatment system and the 8-mgd low-pressure reverse osmosis system at the North County Regional Water Treatment Plant. The lessons learned during operation, specifically the intricacies of positive displacement pumps and isobaric energy recovery devices, will be considered and incorporated into the final design.

THE AFFORDABLE DESALINATION COLLABORATION
10 MGD CONCEPTUAL CASE STUDY

Thomas F. Seacord, P.E. - Carollo Engineers, P.C.
Steve Dundorf - US Bureau of Reclamation
John MacHarg - Affordable Desalination Collaboration

ABSTRACT

The Affordable Desalination Collaboration (ADC) is a nonprofit organization which has successfully demonstrated SWRO in the range of 6.0-7.6 kWh/kgal (1.6 -2.0 kWh/m^3) of permeate produced. Previous publications by the ADC have focused on large plants, approximately 50- MGD in size.[1] In presenting these results and discussing the scalability of the ADC's data, it was identified that medium sized (i.e., 10-MGD) plants require different design considerations to realize similar energy savings. This paper presents a conceptual design and costs for a medium size (10 MGD) SWRO plant based upon the ADC's 2006 demonstration project in Port Heuneme, California.

The conceptual design for the facility includes open ocean intake, pretreatment, multiple trains with dedicated high pressure pumping and energy recovery, and permeate post treatment. The conceptual facility is based on a stand-alone design with access to an existing outfall for brine disposal.

INTRODUCTION

The World Health Organization (WHO) estimates that the number of people living in regions with water availability problems will almost double, from 1.5 billion in 1990 to 2.8 billion in 2050. Populations that reside in coastal areas have a tremendous water resource, seawater, which makes up 95% of the world's water, but is not suitable for potable consumption without proper treatment. Historically, the limiting factor in the use of this resource has been the cost of desalination, which is due, in part, to its high-energy consumption.

The ADC has operated a full-scale demonstration plant at the U.S. Navy's Seawater Desalination Test Facility in Port Hueneme, California from May 2005- April 2006. The ADC has achieved the goal of demonstrating record low energy consumption for SWRO at 6.0 kWh/kgal (1.58 kWh/m^3).

ADC STUDY MATERIAL AND METHODS

Process Flow Diagram and Equipment Design Criteria

The ADC demonstration plant was designed to produce between 48,100 to 75,600 gpd (182 to 286 m^3/day) of permeate using existing technologies that minimize power consumption. **Figure 1** presents a process flow diagram for the ADC's SWRO plant. The process uses an open intake, media filters, a bag filter, a high efficiency positive displacement pump, and an isobaric energy recovery device. The design criteria for these components are presented in **Table 1**.

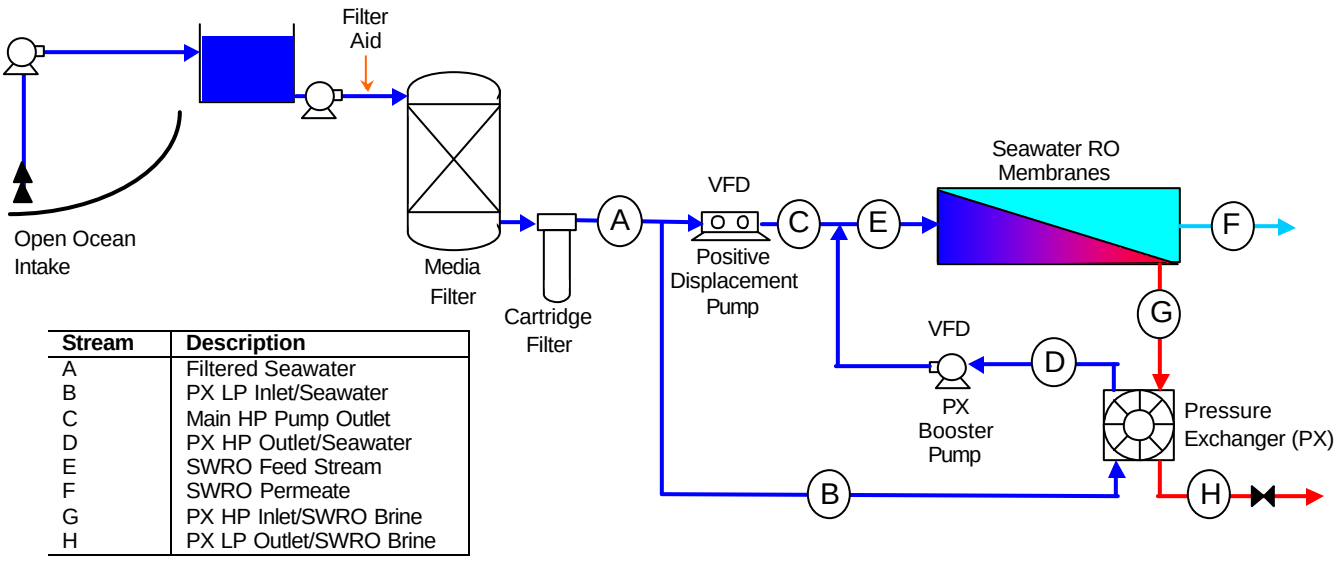

Stream	Description
A	Filtered Seawater
B	PX LP Inlet/Seawater
C	Main HP Pump Outlet
D	PX HP Outlet/Seawater
E	SWRO Feed Stream
F	SWRO Permeate
G	PX HP Inlet/SWRO Brine
H	PX LP Outlet/SWRO Brine

Figure 1. Process Flow Diagram - ADC's Demonstration Scale SWRO plant

Table 1. Design Criteria for ADC's SWRO Demonstration Scale Equipment

Parameter	Unit	Value
Media Filter		
Loading Rate	gpm/ft^2	3 to 6
Depth/Grain Size/U.C. of Anthracite	in/mm/-	18 / 0.85-0.95 / <1.4
Depth/Grain Size/U.C. of Sand	in/mm/-	10 / 0.45-0.55 / <1.4
Depth/Grain Size/U.C. of Gravel	in/mm/-	6 / 0.3 / <1.4
Cartridge Filter		
Cartridge Specs		#2, 5-micron
Loading Rate	gpm/10-in.	~1
Membrane System		
Models		FILMTEC™ SW30HR-380, FILMTEC™ SW30XLE-400*i*, FILMTEC™ SW30HR LE-400*i*
Diameter	inch	8
Elements per Vessel	No.	7
Vessels	No.	3
High Pressure Pump [1]		
Type		Positive Displacement
TDH	ft (psig)	1385 to 2305 (600 to 1000)
Energy Recovery [2]		
Type		Isobaric
PX Booster Pump [3]		
Type		Multi-stage Centrifugal
TDH	ft (psig)	70 to 115 (20 to 50)

1 David Brown Union, Model TD-60
2 Energy Recovery, Inc., Model PX-70S
3 Energy Recovery, Inc., Model HP-8504

Cost Estimating Procedures

A present value analysis model, which accounts for both capital and operating costs was used to establish the most affordable operating condition. The conditions for the present value analysis model were established as part of the testing protocol, early during the ADC's development. The conceptual 10 MGD design parameters are presented in **Table 2**.

Capital cost was determined under the assumption that the SWRO facilities would be stand alone with an existing disposal outfall. Therefore, capital costs developed include intake, treatment and distribution facilities. Pretreatment was considered similar to the demonstration scale test equipment, however, media filter cost and operation/ maintenance were estimated in accordance with the deep bed filter concepts used for the Point Lisas SWRO facility in Trinidad (i.e., 4 gpm/ft^2, 5-ft anthracite, 2.5-ft sand, 2-ft garnet).[2] This design is assumed to be more compatible with challenging raw water qualities (i.e., than the ADC's demonstration scale media filters), such as those associated with red tide events. The cost estimating of the membrane system was based on the ADC demonstration units design with the exception of the high pressure pumping. Six trains with dedicated centrifugal pumps and isobaric energy recovery was best suited to match the ADC operating parameters and provide a realistic facility design for a 10 MGD plant. Post treatment costing is based on typical treatment of RO permeate to insure a finished water that meets or exceeds potable water standards.

Table 2. Present Value Analysis Conditions

Project Size	10 MGD	Intake/High Service Pmp Motor Eff.	95%
Capital Cost[1]	Determined with WTCOST Model and Manufacturer Quotes	SWRO Process Energy Demand	model data[2]
		Membrane Life	Refer to **Table 5**
		Membrane Element Cost[3]	$475 to $600
Electrical Systems	15% of Capital Cost	Pressure Vessel[4]	$8000
Instrumentation & Control	12% of Capital Cost	Ferric Chloride Cost	$0.23/lb
Project Life	30 years	Ferric Chloride Dose	10 mg/L
Bond Payment Period	30 years	Gas Chlorine Dose (pretreatment)	2 mg/L
Interest	5%	Sodium Hypochlorite Cost	$0.25/lb.
Construction Contingencies	15% of capital cost	Sodium Bisulfite Dose	4.6 mg/L
Contractor OH&P	10% of capital cost	Sodium Bisulfite Cost	$0.3/lb.
Engineering & Const. Mgmt.	25% of capital cost	Cartridge Filter Loading Rate	4 gpm/10-in.
Permitting Cost	$5-million	Cartridge Filter Cost	$2.50 /10-in.
Annual Maintenance Costs	1.5% of capital cost	Cartridge Filter Life	1000 hours
Labor	14 operators @ $55,000/yr ea. + 1.75 multiplier for overhead	Carbon Dioxide Dose	16 mg/L
		Carbon Dioxide Cost	$0.04/lb
Power Costs	$0.12 per kW-hr	Lime Dose	44 mg/L
Intake Pump TDH	200 ft H_2O	Lime Cost	$0.05/lb.
High Service Pump TDH	200 ft H_2O	Gas Chlorine Dose (finished water)	1.5 mg/L
Intake/High Service Pmp Eff.	80%		

Note: O&M does not include administrative, laboratory, legal, reporting or management fees since these costs vary widely.

1 Includes intake and intake pump station, prechlorination/dechlorination systems, ferric chloride system, media filtration, media filter backwash system, filtered water lift station, cartridge filters, SWRO equipment, RO bldg., permeate flush system, clean-in-place system, transfer pump station, process piping, yard piping, lime system, carbon dioxide system, chlorination system, high service pump station, site work.

2 Feed Pressure Data for operating points were used to develop RO specific energy using ERI PX Power Model©

3 SW30HR-380 = $475/ea.; SW30XLE-400*i* = $600/ea.; SW30HR LE-400*i* = $500/element.

4 Installed, includes all ancillary piping, frames and fittings.

Table 3 establishes the expected membrane life and the cumulative annual replacement rate (CARR) based on recovery and membrane flux. The CARR values presented in **Table 3** are based upon industry experience when treating water of similar quality. The expected membrane life is used to estimate membrane replacement cost. Membrane replacement resulting from warranty maintenance by the manufacture was not part of the replacement cost. Cost resulting from the cumulative annual replacement rate (CARR) is built into the membrane element cost by the manufacturer during the membrane warranty period.

Table 3. Membrane Life & Annual Replacement Rate

	Flux					
	6 GFD		7.5 GFD		9 GFD	
Recovery	CARR[1]	Membrane Life	CARR[1]	Membrane Life	CARR[1]	Membrane Life
35%	7%	6.5 yrs	8%	6.25 yrs	9%	6 yrs
42.5%	9%	6 yrs	10%	5.75 yrs	11%	5.5 yrs
50%	11%	5.5 yrs	12%	5.25 yrs	13%	5 yrs

1 Cumulative Annual Replacement Rate (CARR). The percentage of membrane elements that would be replaced to maintain a performance requirement (i.e., permeate quality and energy) for a 5-year warranty.

10 MGD CASE STUDY

Design Concept

The cost estimating parameters stated above and the following design concepts are the basis for the costs presented in this paper. Design concepts of interest when considering how to configure a medium sized, 10-MGD SWRO plant to match the efficiency demonstrated during the ADC's testing include:

- Pump Selection
- Pump Station Design

Pump Selection. The type of pump to choose for a specific application is dependant on the purpose, efficiency, pump curve characteristics, cost, maintenance requirements, and historical operation success. Deciding what type of pump to use is therefore a function of each application. Common pumps used for SWRO include both centrifugal pump and positive displacement pumps. Advantages and disadvantages of each pump are listed in the table below.

Table 4. Pump Type Comparisons

Pump Type	Advantages	Disadvantages	Notes
Centrifugal	• Low Maintenance • Available in wide range of flows	• Lower efficiency	• Very large pumps can be as efficient as PD pumps
Positive Displacement (PD)	• High efficiency • Flat pump curve	• Pulsating flow • High Maintenance • Application limited to lower flow rates	

As indicated in **Table 4**, pump sizing can be a significant consideration in order to obtain energy efficiency. The efficiency of a centrifugal pump is a function of rotational speed and capacity.[3] As shown in **Figure 2**, for a centrifugal pump, efficiency increases with the flow capacity of the pump. Therefore, to maximize efficiency, pumps that perform duties such as intake raw water pumping, filtered water lift pumping, permeate lift pumping and finished water pumping might be designed to maximum flow rate per pump. However, as pump size increases, for a small or medium sized plant (e.g., up to 10 MGD), flexibility in how the plant is operated can be sacrificed. Therefore, to minimize power use, in addition to pump type, pump station design must also be considered in the context of how the plant is operated.

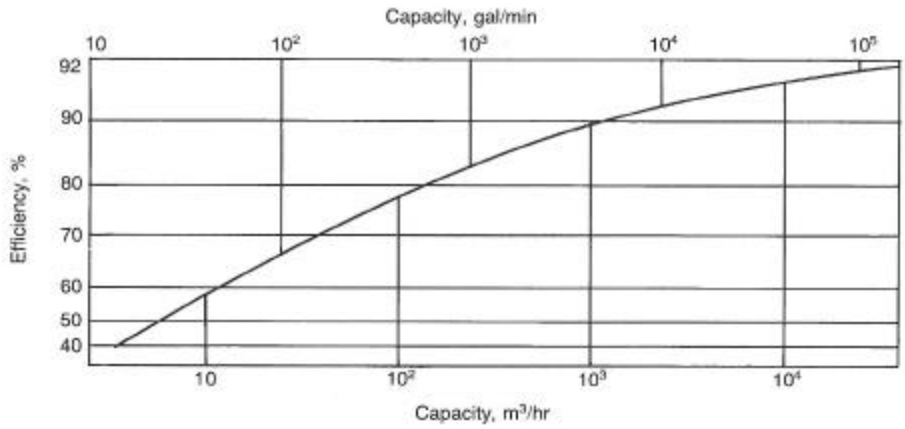

Figure 2. Maximum Pump Efficiency Attainable at the Best Operating Point [3]

Pump Station Design. In order to achieve maximum efficiency within the SWRO process, pump station design should be carefully considered. Two pump station designs are typically used to supply high-pressure water to the RO trains. These include:

- Dedicated pumps for every train.
- Three center design where pumps and energy recovery are separated from the trains and a feed manifold is common to all of the trains.

By separating the high pressure pumping, energy recovery and membrane banks, a three-center design has proven to be a successful technique for maximizing efficiency of individual equipment in an SWRO facility. Such a design concept has been employed at the 72 MGD Ashkelon SWRO facility.[4] With a three-center design, each component can be sized to achieve maximum efficiency and provide an SWRO facility that can maintain a high online factor and low specific energy. However, in the case of a 10 MGD facility, a pump center design may not realize as much energy savings due to the lower flow rates and potentially lower online factor. Operating flexibility is also sacrificed in order to increase the pump sizes.

Because of the lower flow rates associated with a medium sized facility, similar efficiencies can be realized for a dedicated train high-pressure pump station design when compared to a three-center design. Dedicated centrifugal pumps for a six-train SWRO design would have efficiencies of approximately 80% each. A pump center with two centrifugal pumps providing the SWRO feed flow rate (i.e., equal to the permeate flow due to the isobaric energy recovery system design) would achieve an efficiency of 83%. This small gain in efficiency is not significant to the overall energy consumption of the facility. Therefore, to maintain flexibility for a lower online factor, a dedicated pump design concept using centrifugal pumps is used for the medium sized facility design presented in this paper.

10 MGD SWRO Design Concept. **Figure 3** presents the ADC's conceptual 10 MGD process design. As presented in **Figure 3**, a six train dedicated pump SWRO system was used as the basis of the ADC's evaluation. A new ocean intake, inline coagulation and deep bed media filtration, disposal to an existing outfall and post treatment with lime and carbon dioxide were used for estimating costs. The access to the existing outfall was assumed because there is typically some economic advantage for locating a seawater desalination plant.

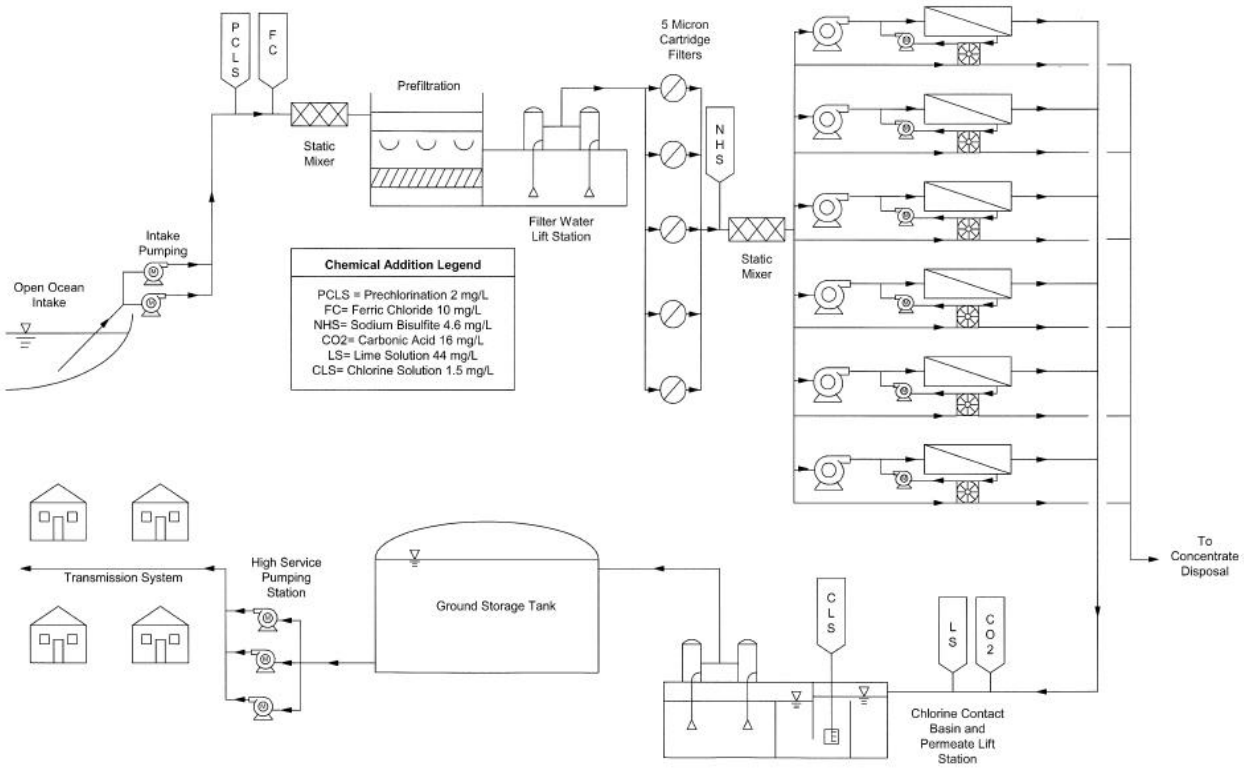

Figure 3. Conceptual 10 MGD SWRO facility (Dedicated Pump Design)

RESULTS AND DISCUSSION

Raw Water Quality and Pretreatment

Typical seawater quality tested during this study is summarized in **Table 5**. As noted, the SWRO average feed water temperature was 15.2°C, which would be representative of an ocean open intake, such as the one proposed for the ADC's 10 MGD case study. The ADC's data should be taken in the context of this information. Some locations along the Pacific Ocean may have slightly different TDS concentrates and once through cooling applications would have higher temperatures, both of which would lead to different permeate qualities and energy consumptions.

Table 5. Average Seawater Quality

Parameter	Average	Parameter	Average	Parameter	Average
Temperature	15.2 °C	Calcium	395 mg/L	Bicarbonate	135 mg/L
Total Dissolved Solids	31,688	Magnesium	1,230 mg/L	Chloride	19,345 mg/L
Conductivity	49,524 mhos	Sodium	10,370 mg/L	Sulfate	2,090 mg/L
pH	8.0	Potassium	340 mg/L	Fluoride	< 25 mg/L
Turbidity	1.8 NTU	Barium	0.21 mg/L	Bromide	< 125 mg/L
Boron	4.82 mg/L	Strontium	7.2 mg/L	Silica	6.85 mg/L
		Aluminum	0.21 mg/L		

The design of the pretreatment process for the ADC's demonstration scale equipment was based upon more than ten years of experience treating the Pacific Ocean from the Navy's intake in Port Hueneme, California. The design included in-line coagulation and direct media

filtration (i.e., criteria established in **Tables 1** and **2**). Shortly after the ADC's plant was commissioned in May 2005, a red tide event occurred that was significantly worse (i.e., both water quality and duration of the event) than any previous red tide event previously experienced. As a result, the ADC's media filtration pretreatment was challenged to produce water with turbidity and silt density index (SDI) values acceptable for the SWRO system. Additionally, media filter differential pressure would increase rapidly over the course of only two days. This made operating the SWRO equipment impractical and the ADC's equipment remained shutdown until October 2005 when the red tide event ended.

The implications of these pretreatment troubles are such that for reliability purposes, some may wonder if media filtration is an appropriate pretreatment. However, even the membrane pretreatment systems that were pre-treating Pacific Ocean water during the summer of 2005 were challenged to produce an adequate capacity.[5] While membrane pretreatment production capacity poses a similar reliability issue, the quality of membrane pretreated water produced was always acceptable. These authors believe that media filtration can be designed such that it can respond to challenging water quality events. Such a design was implemented and has performed successfully at the Point Lisas SWRO plant in Trinidad.[2,6] Therefore, the Point Lisas media filtration design will be used as a basis for further cost estimation. This design should be tested during a California red tide event to validate this assumption.

Once the red tide event had abated, the ADC's equipment was operated in accordance with the testing protocol. During the testing period, seawater and filtered water turbidity and SDI were monitored daily. The results of these recordings throughout the testing duration are reported in **Figure 4**.

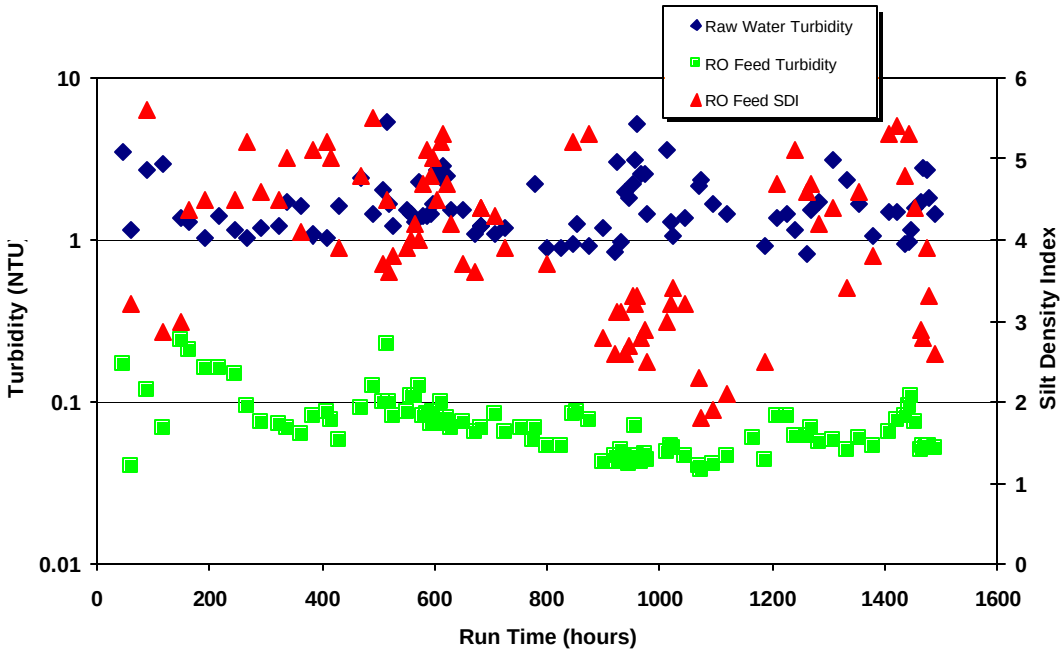

FIGURE 4. ADC Demonstration Scale Test Pretreatment Performance

Permeate Water Quality

The impact of flux and recovery on permeate boron and TDS concentrations is presented in **Figures 5 and 6**. These data were collected with varying flux and recovery during the ADC's testing program. Points of interest include the following:

- When flux increases, permeate TDS and boron concentrations decrease, when recovery increases, permeate TDS and boron concentrations increase due to the scientific principles of diffusion.
- All permeate conditions met the boron removal goal of 1.44 mg/L or less to comply with California's action level for boron in potable water. At the lowest flux tested, the SW30XLE-400*i* membrane produced marginally acceptable levels of boron in the permeate.
- The low energy membrane elements (i.e., SW30XLE-400*i* and SW30HR LE-400*i*) demonstrated the ability to produce acceptable permeate quality with respect to TDS and boron. The high rejection membrane model (SW30HR-380) demonstrated better permeate quality but at the expense of energy. The high rejection low energy element (SW30HR LE-400*i*) produced water with only slightly higher permeate concentrations than the high rejection membrane model (SW30HR-380).

Because each membrane tested was capable of producing water of acceptable quality, each condition tested was evaluated in the cost model. It should be recognized however, that if the ADC test had been fed a higher temperature seawater, more typical of a co-located SWRO plant taking warm water from a once through cooling power plant, that the SW30XLE-400*i* membrane would very likely not produce acceptable water quality at a flux of 6 gfd. Therefore, the data presented herein should be taken in context with the raw water quality data presented in **Table 5**. If the test had been performed at a higher temperature, the SW30HR-380 and SW30HR LE-400*i* membranes would also produce permeate with higher concentrations of TDS and boron, and the feed pressures and power consumption would have been less. Further testing is needed to quantify the true impact of temperature on these results. Additionally, SWRO system designers should consider public issues related to water quality, in addition to water costs when selecting design conditions such as flux, recovery and membrane elements.

10 MGD Conceptual Energy Consumption

Because of the lower efficiency associated with the small centrifugal pumps that are used in the ADC's conceptual 10-MGD design, the ADC's specific energy data measured during the demonstration study are not reflective of what a 10 MGD plant is capable of. Therefore the results need to be adjusted to reflect more realistic specific energy numbers associated with a less efficient centrifugal pump.

The membrane feed pressure and differential pressure data collected during the ADC's demonstration plant operation were used to calculate the RO specific power for the less efficient centrifugal pump. A power model was used to calculate the RO specific energy data, which includes the power consumption of the high-pressure pump as well as the booster pump, which is required with a isobaric energy recovery device. The power model used is a transparent method for calculating SWRO system power requirements and is available for download off of the internet. [7]

FIGURE 5. Permeate Boron Concentrations

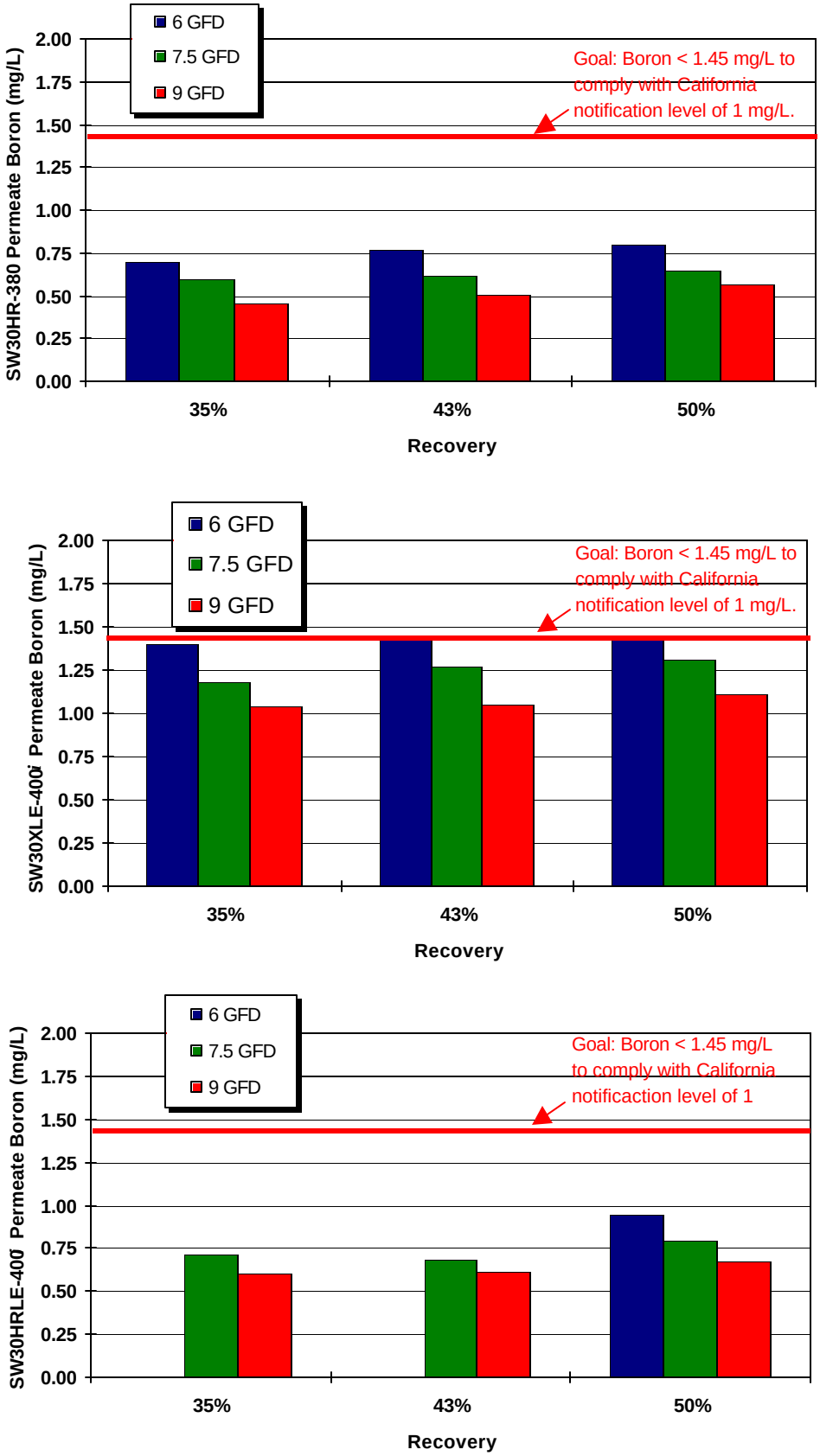

NOTE: 1. A 1.44 mg/L boron concentration meets the California requirement for a 1 mg/L Notification Level. Results must be rounded up to the nearest 0.1 mg/L.

FIGURE 6. Permeate TDS Concentrations

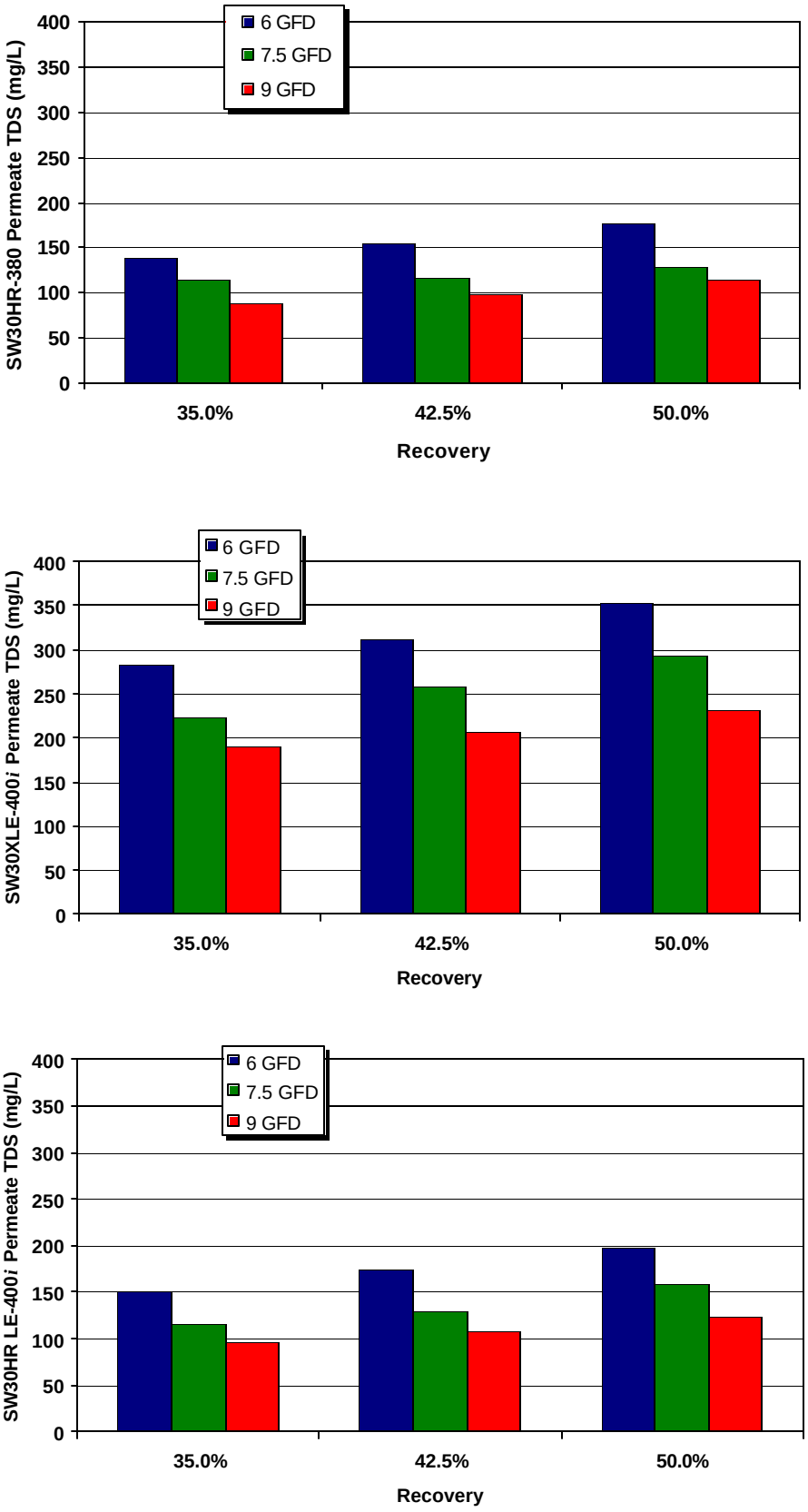

Figure 7 presents specific power graphs for each of the membranes tested, corrected to reflect the lower efficiency centrifugal pumps used in the ADC's 10 MGD conceptual design. The following observations can be made based upon these graphs:

- As expected, the low energy membrane element (i.e., SW30XLE-400i) requires less energy than the other membranes. The low energy high rejection element (i.e., SW30HRLE-400*i*) required only slightly less energy than the standard high rejection element (i.e., SW30HR-380).
- Though the RO specific power generally increases with recovery rate, the total energy required for treatment decreases with increasing recovery. This is due to the increased volume of feed water that must be treated at lower recovery rates to obtain the same volume of permeate. Therefore, these graphs show the importance of analyzing a facility process as a whole, and not just the RO specific power.
- Previously reported ADC specific power data demonstrated a range of 6.0 to 8.9 kW-hr/kgal at the most affordable point for a 50 MGD design. Adjustments that account for the use of a centrifugal high pressure feed pump in a 10 MGD facility result in a higher specific power, estimated to range from 6.6 to 9.8 kW-hr/kgal.

10 MGD Conceptual Costs

Estimated costs for the ADC's conceptual 10 MGD facility are presented in **Figure 8**. The costs include the estimated capital cost as well as the operation and maintenance costs over the range of flux and recovery conditions tested for each membrane during the ADC's demonstration study. As presented previously, these costs assume that the facility has an new open ocean intake, in-line coagulation, deep bed media filtration, six SWRO trains with dedicated pumps, lime and carbon dioxide post treatment, new finished water pumping facilities, and utilizes and existing ocean outfall.

The following findings are drawn from these cost estimates:

- There is generally a downward trend in costs per unit volume as recovery increases due to the cost associated with feed water pretreatment. A recovery rate of 50% was demonstrated to produce the lowest estimated total water cost. Operating at a recovery of 50% is contrary to the recommendation of some in the industry that advocate lower recoveries to maximize membrane life, reduce cleaning frequencies and produce the highest quality permeate.[8,9] However, the impact of high recovery on membrane replacement costs, cleaning frequencies and permeate quality are factored into the ADC's cost estimate using the CARR values presented previously in Table 3. The CARR accounts for the annual replacement of membranes to maintain system performance with respect to power and permeate quality. Therefore, it can be concluded that reducing capital costs associated with pretreatment are estimated to be more important to designing an SWRO process with long membrane life, low cleaning frequencies, and the lowest SWRO energy consumption.
- Capital costs associated with SWRO pumping are constant when using an isobaric energy recovery system. This is because the energy recovery system is sized to handle the concentrate flow and the feed pumping system is designed to pump a flow rate equal to the permeate produced. The added costs for the energy recovery system are incorporated into the ADC's cost estimate for lower recovery rates, as are the added costs for a slightly higher total dynamic head resulting from higher recovery rates.

Figure 7. Specific Power - Corrected for 10-MGD

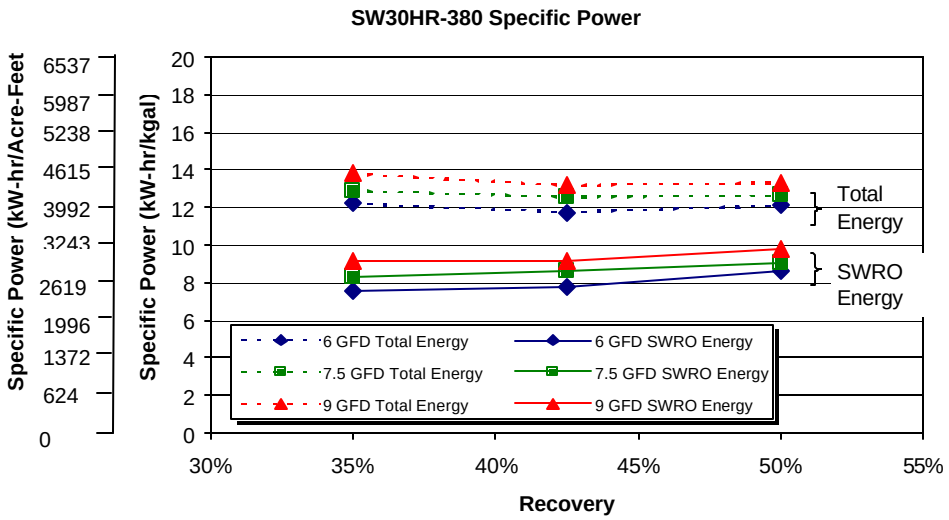

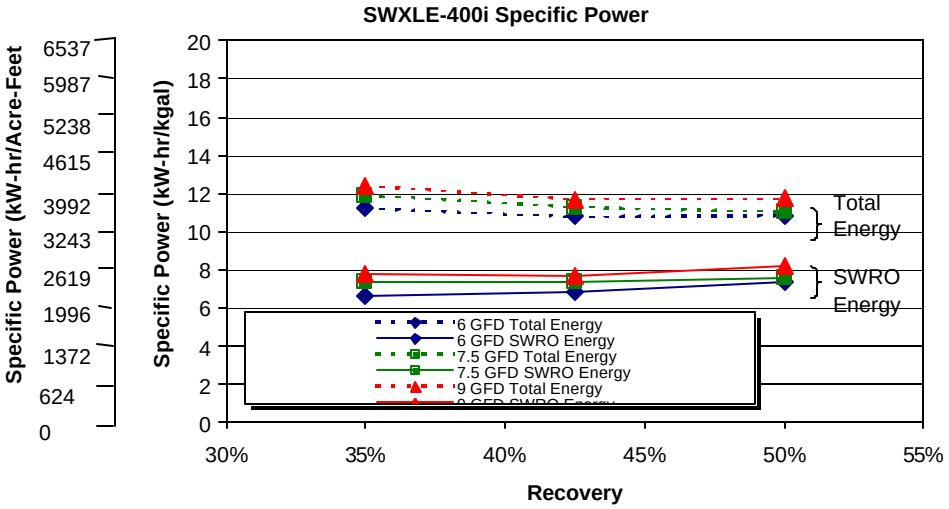

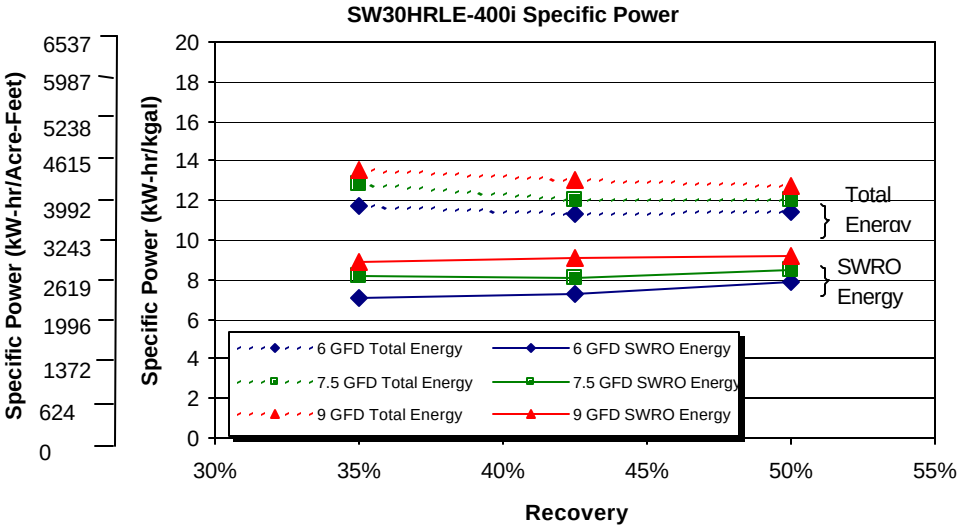

Figure 8. Estimated Costs - 10 MGD SWRO WTP

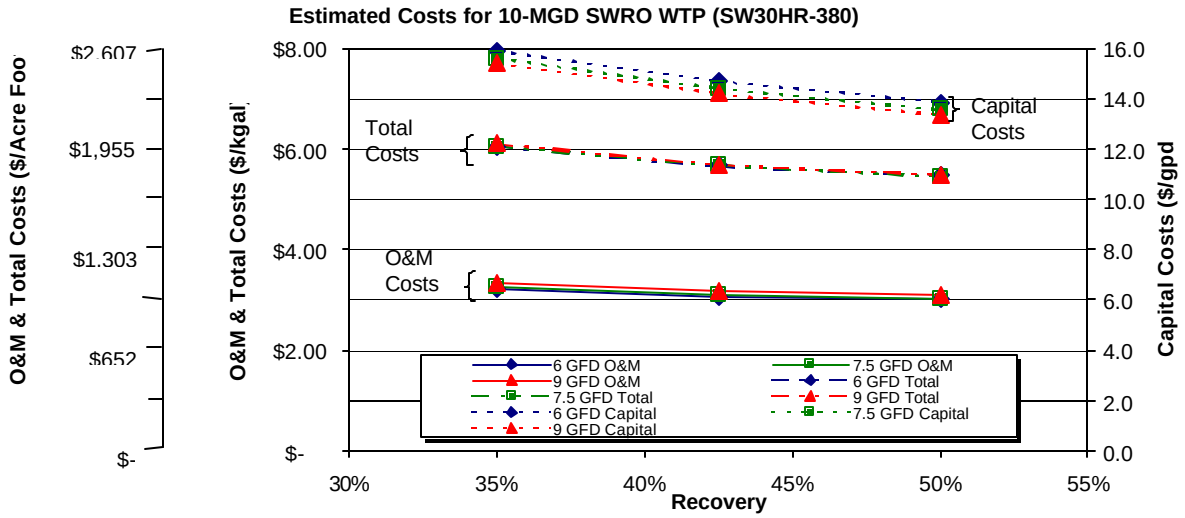

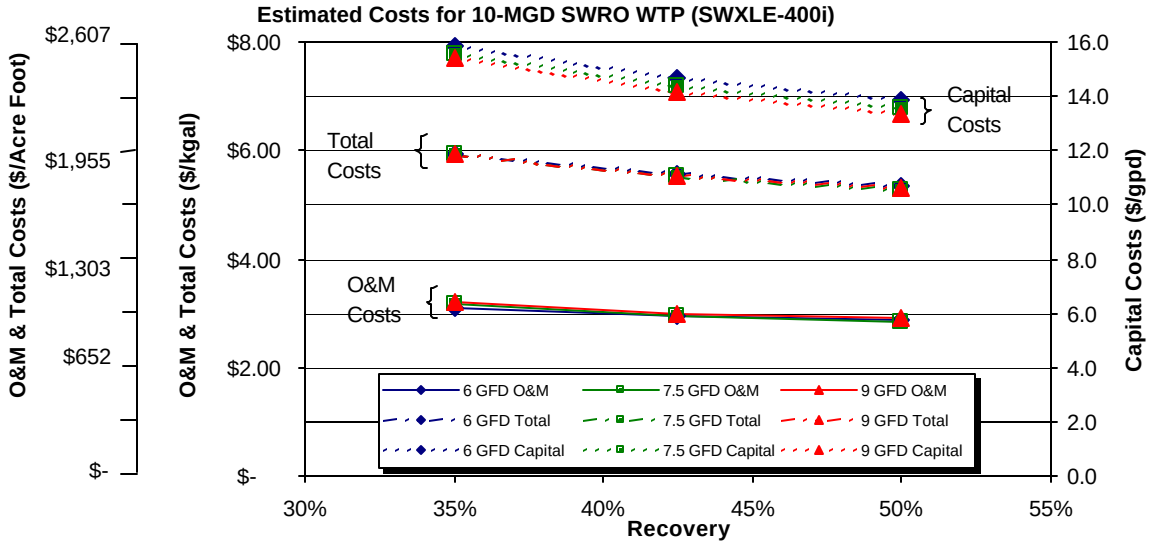

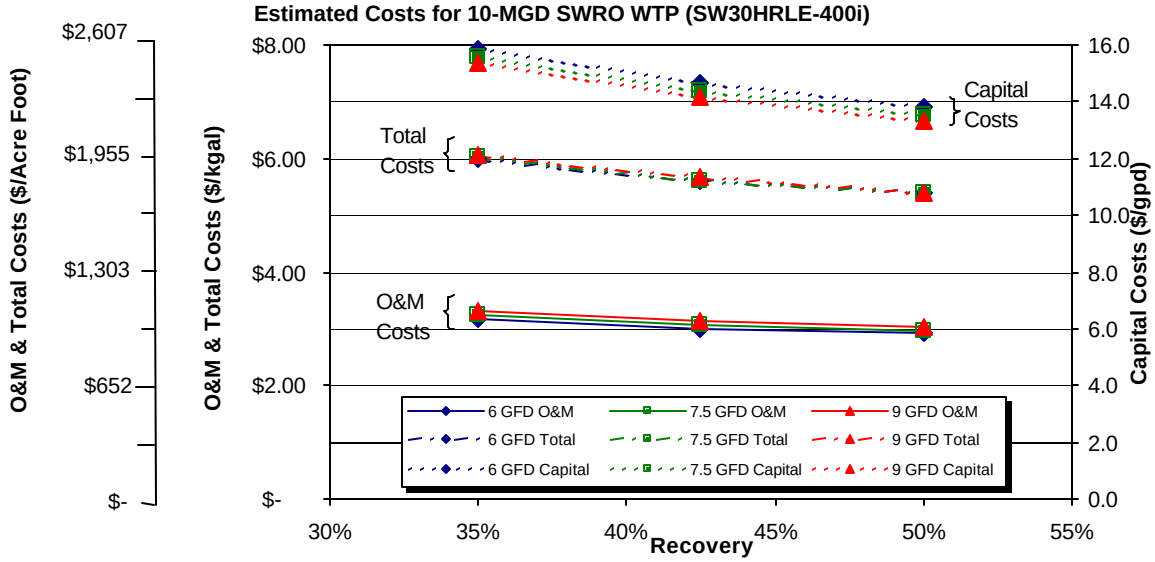

- Higher flux results in lower capital cost yet little difference in operating was observed. Typically, designers will choose higher flux rates to minimize capital costs and produce the best quality water even though power costs, membrane replacement costs and in some cases, cleaning costs may increase as a result. Again, the ADC's costs presented in Figure 8 account for these added O&M costs resulting from higher flux rates using the CARR values presented in Table 3. Our results provide further credence to the industry's experience that these types of operating costs are negligible when compared on a life cycle basis.[10] It should be noted, however, that not all SWRO users will care to operate their RO plants in a manner that results in higher operations costs, despite the projected lifecycle cost savings.
- O&M costs comprise approximately 52% to 57% of the total water cost. SWRO power consists of approximately 23% to 29% of the total water cost. This is a significant reduction over the industry's perception, where some believed that power costs represent 50% of the total water costs for an SWRO facility.

CONCLUSIONS

The following results and conclusions can be taken from the ADC's demonstration study data and the conceptual 10 MGD SWRO facility:

- The ADC's results must be viewed within the context of the raw water quality conditions tested. These conditions include low feed water temperatures (i.e., when compared to once through cooling systems). At higher temperatures, a flux of 6 gfd will produce water with higher concentrations of TDS with a lower specific energy.
- Increasing flux (at constant recovery) on the SWRO membranes results in lower concentrations of TDS and boron in the permeate.
- Increasing recovery (at constant flux) results in higher concentrations of TDS and boron in the SWRO permeate.
- Pump type, pump size and pump station design should be considered to reduce power consumption. Centrifugal pumps were chosen for the ADC's 10 MGD case study due to the flow rates, train sizes, low maintenance, and need for operational flexibility.
- For a 10 MGD SWRO plant, adjusted efficiency due to use of less efficient centrifugal high pressure pumps results in a specific power consumption ranging from 6.6 to 9.8 kWhr/kgal. Previously published ADC operations data demonstrated specific power consumption ranging from 5.98 to 8.90 kWhr/kgal for a 50 MGD SWRO plant.[1] Despite the less efficient centrifugal high pressure pumps, the power required is still approximately a 30% reduction over what industry experts have recently been using for their planning efforts.[11]
- A recovery rate of 50% consistently demonstrated the lowest estimated total water costs.
- Based upon the ADC's cost model, the costs for a 10 MGD SWRO plant with a new open ocean intake, deep bed media filtration, six SWRO trains with dedicated feed pumps, post treatment and ancillary product and finished water pumping are estimated to range from $1,725 to $1,970/AF ($5.29 to $6.05/kgal).

RECOMMENDATIONS

The authors offer the following recommendations to advance and improve upon the work presented in this paper:

- Pretreatment is a critical aspect of a successful seawater RO process. While media filtration is very capable of meeting the SDI and turbidity standards required for RO, the red tide event that occurred early during the study resulted in excessive backwashing frequencies and ultimately placing the study on standby. While the persistence of this event was an apparent anomaly in California, and even those seawater systems treating the Pacific Ocean using membrane pretreatment were challenged to produce enough water, the membrane pretreatment provided a consistent and reliable quality of water, which the ADC's media filter design could not. As a result, the authors recommend a further study to compare other types of media and advanced filtration designs.
- SWRO system designers should consider public values to issues such as water quality and cost when selecting design conditions such as flux, recovery and membrane type. The community values may require the use of a membrane that rejects more TDS and boron, but requires more energy to produce water. Factors of safety in permeate quality may also be considered. The data presented in this paper indicated that the SW30XLE-400*i* membrane barely met the California standard for boron at a flux of 6 gfd. A higher flux or use of a different membrane may make sense for some communities.
- The ADC's test results represent conclusions based upon the performance of new membranes. The concept of the Cumulative Annual Replacement Rate (CARR) was used to adjust costs and normalize performance with respect to permeate quality and energy consumption. Long term testing is required to validate the flux and recovery at the most affordable operating point. In addition, long term testing required to determine how specific power will vary with time and cleaning cycles. Furthermore, industry experience indicates that high flux and high recovery operation results in more frequent chemical cleaning and shorter membrane life. However, when balanced with capital costs on a life cycle basis, incurring these incidental operating costs often proves to be more economical, but more labor intensive to maintain.[10] A longer study is required to help quantify the differences that could not be derived from the ADC's data due to the short testing duration.
- Additional configurations for the SWRO system should be tested to compare alternate membrane types, energy recovery devices and pumping technologies. Many manufacturers have comparable technologies that are worthy of testing.
- Cost estimates should consider the possible economy of large diameter pressure vessels and membrane elements which may reduce capital costs by approximately 20%.[12]
- Seek out, test and demonstrate system designs and technologies that can increase the achievable recoveries of SWRO systems.
- Seek out, test and demonstrate new pump, energy recovery and system designs that avoid the efficiency losses associated with the small or medium sized centrifugal pumps.

ACKNOWLEDGEMENTS

The authors would like to acknowledge the members of the ADC for their material, technical and financial support in completing this work. These members include:

- Avista Technologies, Inc.
- California Department of Water Resources
- California Energy Commission
- Carollo Engineers
- City of Santa Cruz Water Department
- David Brown Union Pumps – Textron
- Eden Equipment Company, Inc.
- Energy Recovery Inc.
- FilmTec Corporation
- Marin Municipal Water District
- Municipal Water District of Orange County
- Naval Facilities Engineering Service Center
- Pentair - CodeLine Pressure Vessels
- Piedmont Pacific Corporation
- Poseidon Resources
- Rolled Alloys
- San Diego County Water Authority
- Sandia National Laboratories
- U.S. Department of Interior, Bureau of Reclamation
- US Desalination Coalition
- WaterEye
- West Basin Municipal Water District
- Young Engineering & Manufacturing, Inc.

REFERENCES

1. Seacord, T.F., J. MacHarg, and S. Coker. 2006. Affordable Desalination Collaboration 2005 Results. *In Proc. of the AMTA Conference*. Stuart, Fla.: AMTA.
2. Trussell. R.R., J. Jacangelo, and R. Cass. 2004. Design and Performance of the Pretreatment for the Point Lisas Desalter. *In Proc. of the Awwa Annual Conference*. Denver, Colo.: AWWA.
3. Sanks, Robert L. 1998. Performance of Centrifugal Pumps. In *Pump Station Design*. 2nd Ed. Woburn, Mass.: Butterworth-Heinemann.
4. Liberman, B. M. Faigon, and D. Hefer. 2005. Flexible 3-Center Set-up Saves Costs in Ashkelon. *International Desalination and Water Reuse Quarterly*,14(4):19-21.
5. Voutchkov, N. 2006. Application of Ultrafiltration/Microfiltraiton as Pretreatment for Seawater Desalination. NWRI Microfiltraiton IV Conference. City of Organge, CA.
6. Irwin, K.J., and J.D. Thompson. 2003. Point Lisas SWRO Plant Trinidad - First Year Success. *International Desalination and Water Reuse Quarterly*, 13(3).
7. ERI PX Power Model©. http://www.energy-recovery.com
8. MacHarg, J. 2001. Exchanger Tests Verify 2.0 kWhr/m3 SWRO Energy Use. *International Desalination and Water Reuse Quarterly*,11(1).
9. Proto, T., E. Schoepke, L. Etchinson, T. O'Brien, B. Hernon, K. Perry, and M. Peterson. 2000. Production of High Purity Water from Seawater. *In Proc. of the 2000 North American Biennial Conference of the American Desalting Association*. Stuart, Florida:ADA
10. Chellam, S., C.A. Serra, M.R. Wiesner. 1998. Estimating Costs for Integrated Membrane Systems. *Jour. Awwa*, 90(11).
11. Alspach, B. and I. Watson. Sea of Change. Civil Engineering. 74(2). February 2004
12. Bartels, C., R. Bergman, M. Hallan, L. Henthorne, P. Knappe, J. Lozier, P. Metcalfe, M. Peery, and I. Shelby. 2005. Membrane Consortium Analysis of Large RO/NF Element Diameters. *In Proc. of the AWWA Membrane Technology Conference*. Denver, Colo.: AWWA.

Quarterly Technical Progress Report
Covering Period July 1, 2007 to September 31, 2007
Date of Report 10-12-07

Agreement Number:	4600007440
DWR ID Number:	n/a
Project Title:	Optimizing Seawater Reverse Osmosis for Affordable Desalination
Recipient Organization:	Affordable Desalination Collaboration 2419 E. Harbor Blvd, #173 Ventura, CA 93001
Partners:	See attached membership list.
Contact Person:	John MacHarg 2419 E. Harbor Blvd, #173 Ventura, CA 93001 Tel: 650-283-7976 Fax: 805-658-8060 e-mail: jmacharg@affordabledesal.com
Date Submitted:	10-24-07

_____
Signed, Reviewed by designated representative

1. **Project Objective:** The objectives of the Affordable Desalination Collaboration (ADC) are to demonstrate affordable, reliable and environmentally responsible reverse osmosis desalination technologies and to provide a platform by which cutting edge technologies can be tested and measured for their ability to reduce the overall cost of the seawater reverse osmosis (SWRO) treatment process.

2. **Project Description / Background:** A key challenge facing the seawater desalination industry today is to develop a new generation of reverse osmosis (RO) plants that deliver high-quality, fresh water at a reduced economic and environmental cost. The key to achieving these goals is to address the most expensive and environmentally taxing component of operating a desalination system: energy.

   The ADC was formed in 2004 to fund and execute the first part of a multiple phase Affordable Desalination Demonstration Project. The ADC members are a group of leading government agencies, municipalities, RO manufacturers, consultants and professionals partnering together to help reduce the costs associated with desalination.

The first phase of the project, ADC I, built and operated a demonstration plant at the United States Navy's Seawater Desalination Test Facility in Pt. Hueneme, California. The plant utilized a combination of proven technologies developed primarily in the U.S. and California to demonstrate that seawater desalination can be optimized to make it technically and economically viable. ADC I achieved remarkable results by desalinating seawater at energy levels between 6.0-6.9 kWh/kgal (1960-2250 kWh/acre-ft). On average, these numbers make the power for desalination comparable to the power required for the State Water and the Colorado River Aqueduct projects and they are approximately 35% lower than experts had been projecting for seawater desalination. For the approximate 100 mgd of proposed seawater desalination projects in Southern California alone, this 35% savings equates to approximately 140,000 Mega Watt hours in energy savings per year.

This second phase (ADC II) will pursue the following demonstration, and development programs.

a. Test and demonstrate additional manufacturers' membranes through a protocol similar to Phase I.
b. Test and demonstrate DOW FILMTEC's next generation "hybrid-membrane".
c. Develop and demonstrate new process designs that are possible as a result of the isobaric energy recovery technologies. We will use the ADC pilot system to test and demonstrate these new flow schemes in order to push the recoveries above 50%, while still maintaining good water quality and low energy performance.
d. Test and demonstrate Zenon ultra-filtration technology ahead of our ADC pilot system. This portion of the test should build on and compliment the other pre-filtration studies that are taking place in the region.

Thus far we have completed the first set of manufacturers' membrane testing that includes the Toray membrane test (Task 2) and we have also completed a portion of the Koch membrane test (Task 3).

- Start Date of Contract: April 2, 2007
- End Date of Contract: December 22, 2008

3. Progress and Status:

The third quarter of 2007 has been mostly spent proceeding through the test protocol with a few minor diversions and delays. We completed the Toray Low Energy Membrane Task 2 test on 8-17-07. We then changed over to the Koch Low Energy Membranes Task 3 test and began marching through the test protocol on 8/22/07. We had completed the ripening and 12 point flux and recovery test protocol by September 28th with the following results:

Summary of Results Koch Membranes 12 Point Flux and Recovery (PRELIMINARY)

Recovery %	Flux gfd	RO Process kWh/m3 (kWh/kgal)	Permeate mg/l TDS	Permeate Boron mg/l	Total Treatment Costs $/kgal
42.9%	5.98	1.67 (6.31)	388.30	TBD	$ 846
45.7%	5.98	1.72 (6.50)	400.70	1.6	$ 828
50.3%	5.98	1.82 (6.88)	431.70	1.6	$ 816
43.2%	7.51	1.77 (6.69)	284.70	1.6	$ 834
45.8%	7.51	1.79 (6.77)	323.70	1.3	$ 813
49.9%	7.47	1.88 (7.12)	380.60	1.4	$ 799
42.3%	8.93	1.82 (6.88)	272.70	1.3	$ 822
45.8%	8.95	1.86 (7.03)	272.70	TBD	$ 785
50.1%	8.90	1.93 (7.29)	307.00	1.4	$ 787
42.7%	9.98	1.89 (7.14)	270.10	TBD	$ 822
46.3%	9.98	1.89 (7.14)	295.10	TBD	$ 798
50.7%	9.99	1.96 (7.41)	324.20	TBD	$ 782

1. gfd = gallons/minute/square-foot/day, kWh/m3 = kilowatt hour/cubic meter, kWh/kgal = kilowatt hour/1000 gallons, mg/l = milligrams/liter, TDS = total dissolved solids.

The "most affordable point" from the data above as projected by our net present value model was 10 gfd @ 50% recovery, however this was not considered to be a sustainable flux point. Therefore through consultation with Koch membranes and Carollo Engineers we selected 9 gfd at 46% recovery as the most affordable point and the projected cost of water was $785/acre-ft (2.41/kgal). We expect to be completed with the final two week demonstration of this point by the end of October and will then proceed with the Hydranautics SW5 Task 4 membrane test.

A table comparing the most affordable points between FILMTEC (tested in ADC I) Toray, and Koch is provided below. The complete data set and NPV analysis for ADC II results is also attached.

Manufacturer's Comparison of the Most Affordable Points (PRELIMINARY)

Mfgr	Rec %	Flux gfd	RO Process kWh/m3 (kWh/kgal)	TDS mg/l	Boron mg/l	Total Treatment Costs $/kgal (3)	Temp ºF	Feed ktds
FILMTEC (1) SW30HR-380	50.0	9.0	2.23 (8.43	107	0.57	$ 796	64	32.02
FILMTEC (1) SW30XLE-400i	50.0	9.0	1.91 (7.22)	210	1.04	$ 772	56	32.01
FILMTEC (1) SW30HRLE-400i	48.0	6.0	1.87 (7.07)	188	0.95	$ 810	57	32.06
Toray TM800C (2)	49.7	9.0	1.98 (7.48)	185	0.79	$ 792	65	32.39
Koch TFC 2822HF-400 (2)	45.8	9.0	1.86 (7.03)	273	TBD	$ 785	62	32.01

Notes: 1. Data from ADC I test where FILMTEC membranes were used exclusively. 2. Preliminary results. 3. Cost of water from various manufactures is from various NPV model revisions and will need to be reconciled to a final NPV model upon completion of project. Therefore the above Total Treatment Costs are not exactly "apples to apples" comparisons.

The Zenon advanced filtration system was scheduled to be installed in September-07 but this schedule has slipped to November-07. This package is currently being manufactured at the GE factory. We have a signed membership agreement with Zenon-GE to participate in the ADC and demonstrate their advanced filtration system. Installing the system in November should still give us sufficient time to gain at least one year of data and optimization of their system before this DWR contract is complete. We are currently operating with the original media filtration and producing good quality RO feed water at less than 5 SDI.

4. **Percent Complete of Total Project:** ~17%

5. **Deliverables:**

Trade Show/Conference/Publication	Date(s)	Author(s)	Presenter	DWR Submittal
IDA World Conference, Gran Canaria, ADC II Update	October 21-26, 2007	Stephen Dundorf, Thomas F. Seacord, John MacHarg	Stephen Dundorf	Q3-07
Desalination and Water Reuse (DWR) Quarterly, Innovative Designs to be Tested in ADC II	Aug/Sept-07	John P. MacHarg	n/a	Q3-07
AMTA 2007 Annual Conference, Las Vegas, ADC I 10 mgd Application	July 23-27, 2007	Bradley Sessions, Tom Seacord, P.E.	Tom Seacord	Q2-07
AWWA Membrane Technology Conference, Tampa Florida, Collier County results	March 18-21, 2007	Brandon Yallaly, P.E., Tom Seacord, P.E., Steve Messner	Brandon Yallaly	Q2-07

6. Table of expenditures:

	Budgetary Category (I)	Project Budget: Cost Share (II)	Project Budget: State Share (Grant) (III)	Project Budget: Total Project Costs (IV) = (II+III)	State Share: Previous Qtrs Balance A	State Share: Current Qtrs Expense B	State Share: Qtrs Ending Balance A-B=C	Cost Share: Previous Qtrs Balance D	Cost Share: Current Qtrs Expense E	Cost Share: Qtrs Ending Balance D-E=F
(a)	Administration									
	Salaries, wages	$ -	$ 223,725	$ 223,725	$ 195,225	$ 21,612	$ 173,613	$ -	$ -	$ -
	Fringe benefits	$ -	$ 67,118	$ 67,118	$ 56,475	$ 15,912	$ 40,563	$ -	$ -	$ -
	Supplies	$ -	$ 39,850	$ 39,850	$ 39,850	$ -	$ 39,850	$ -	$ -	$ -
	Equipment	$ -	$ 6,000	$ 6,000	$ 6,000	$ -	$ 6,000	$ -	$ -	$ -
	Consulting services	$ 22,500	$ 47,000	$ 69,500	$ 47,000	$ -	$ 47,000	$ 22,500	$ -	$ 22,500
	Travel	$ -	$ 20,350	$ 20,350	$ 19,322	$ 5,587	$ 13,735	$ -	$ -	$ -
(b)	Planning/design/engineering	$ 19,500	$ 14,404	$ 33,904	$ 14,404	$ -	$ 14,404	$ 19,500	$ 20,000	$ (500)
(c)	Equipment purchases/Rentals/Rebates/Vouchers	$ 587,200	$ 19,000	$ 606,200	$ 19,000	$ -	$ 19,000	$ 175,400	$ 14,150	$ 161,250
(d)	Materials/Installation/Implementation	$ 69,000	$ 38,400	$ 107,400	$ 35,621	$ 12,840	$ 22,781	$ 69,000	$ -	$ 69,000
(e)	Implementation verification	$ 7,500	$ 8,000	$ 15,500	$ 8,000	$ -	$ 8,000	$ 7,500	$ -	$ 7,500
(f)	Project legal/License/Insurance fees	$ -	$ 45,000	$ 45,000	$ 45,000	$ -	$ 45,000	$ -	$ -	$ -
(g)	Structures	$ -	$ -	$ -	$ -	$ -	$ -	$ -	$ -	$ -
(h)	Land Purchase/Easement	$ -	$ -	$ -	$ -	$ -	$ -	$ -	$ -	$ -
(i)	Environmental Compliance/Mitigation/Enhancement	$ -	$ -	$ -	$ -	$ -	$ -	$ -	$ -	$ -
(j)	Construction	$ -	$ -	$ -	$ -	$ -	$ -	$ -	$ -	$ -
(k)	Other (Operating Cash)	$ 335,000	$ -	$ 335,000	$ -	$ -	$ -	$ 335,000	$ -	$ 335,000
(l)	Operation, monitoring and assessment	$ -	$ 278,103	$ 278,103	$ 271,126	$ 37,433	$ 233,693	$ -	$ -	$ -
(m)	Report preparation	$ 2,000	$ 2,500	$ 4,500	$ 2,500	$ -	$ 2,500	$ 2,000	$ -	$ 2,000
(n)	Outreach and information sharing	$ 150,000	$ -	$ 150,000	$ -	$ -	$ -	$ 145,000	$ 18,750	$ 126,250
(o)	Subtotal	$ 1,192,700	$ 809,450	$ 2,002,150	$ 759,522	$ 93,384	$ 666,138	$ 775,900	$ 52,900	$ 723,000
(p)	Overhead (8%)	$ -	$ 160,172	$ 160,172	$ 152,118	$ 6,590	$ 145,528	$ -	$ -	$ -
(q)	Contingency (1.5%)	$ -	$ 30,379	$ 30,379	$ 30,379	$ -	$ 30,379	$ -	$ -	$ -
(r)	Total (o+p+q)	$ 1,192,700	$ 1,000,000	$ 2,192,700	$ 942,019	$ 99,974	$ 842,045	$ 775,900	$ 52,900	$ 723,000

7. **Schedule Status:** With the exception of the Zenon 1000 Pilot Demonstration, (Task 1) we are maintaining our schedule. We hope to install the Zenon system by November-2007 leaving us more than adequate time to achieve 1 year of operation before the test is complete. Attached is a current schedule.

8. **Plans for Next Quarter:** Q4-07 will see the completion of all three standard membrane manufacturers' testing, Tasks 2, 3, and 4, and the installation of the Zenon 1000 system.

9. **Attachments:** Please see attached papers and publications section.

All quarterly reports should be publicly disclosable and not contain confidential, proprietary or business sensitive information.

Task and % Complete Progress Table

Agreement Number	Starting Date:	Completion Date:	Quarter-Year	Report Number	PERCENT OF			
4600007440	4.2.07	12.31.08	Q3-2007	2				
Grantee Agency Name:		% Time Elapsed	Total Grant Funds used	Grant funds this Quarter				
Affordable Desalination Collaboration		26%	$ 157,955	$ 99,974				
Name of Project: Optimizing Seawater Reverse Osmosis for Affordable Desalination								

TASKS	YEAR	2007				2008		Project	Task Complete Last Report	Task Complete This Report	Project Complete
	MONTH	Qtr 1	Qtr 2	Qtr 3	Qtr 4	Qtr 1	Qtr 2				
Task 1: Zenon 1000 pilot demonstration								20	5	0	1
Task 2: Toray low energy membrane demonstration								10	80	20	10
Task 3: Koch low energy membrane demonstration								10	0	60	6
Task 4: Hydranautics low energy membrane demonstration								10	0	0	0
Task 5: Dow-FILMTEC hybrid membrane demonstration								10	0	0	0
Task 6: Unbalanced PX high recovery testing								20	0	0	0
Task 7: Interstage-PX hybrid high recovery testing								20	0	0	0
Show Progress by Use of Bar Chart	**Scheduled =**							100			
	Completed =										17

Schedule

Table G-2 ADC Detailed Project Schedule.

ID	Task Name	Duration	Start	Finish	Estimated Cost
1	Agreement development	168 days	Tue 8/1/06	Thu 3/22/07	
2	Final aggrement signed	5 days	Fri 3/23/07	Thu 3/29/07	
3	Project begins	1 day	Mon 4/2/07	Mon 4/2/07	
4	**Zenon 1000 Pilot Demonstration**	**256 days**	**Thu 11/15/07**	**Thu 11/6/08**	**$183,787.00**
5	Install and test Zenon System	18 days	Thu 11/15/07	Mon 12/10/07	
6	Operate and monitor Zenon 1000 membrane pilot system	235 days	Thu 12/13/07	Wed 11/5/08	
7	Complete Zenon testing	1 day	Thu 11/6/08	Thu 11/6/08	
8	**TorayTM800C low energy membrane demonstration**	**51 days**	**Mon 4/30/07**	**Mon 7/9/07**	**$272,413.00**
9	Install Toray TM800C Membranes	2 days	Mon 4/30/07	Tue 5/1/07	
10	TM800C Ripening period	15 days	Wed 5/2/07	Tue 5/22/07	
11	TM800C 9 flux and recovery points	18 days	Wed 5/23/07	Fri 6/15/07	
12	TM800C Most affordable point	15 days	Mon 6/18/07	Fri 7/6/07	
13	Complete Toray TM800C testing	1 day	Mon 7/9/07	Mon 7/9/07	
14	Submit project update report to DWR	5 days	Mon 7/9/07	Fri 7/13/07	
15	**Koch low energy membrane demonstration**	**68 days**	**Tue 7/10/07**	**Thu 10/11/07**	**$363,218.00**
16	Install membranes	2 days	Tue 7/10/07	Wed 7/11/07	
17	Ripening period	20 days	Thu 7/12/07	Wed 8/8/07	
18	9 flux and recovery points	25 days	Thu 8/9/07	Wed 9/12/07	
19	Most affordable point	20 days	Thu 9/13/07	Wed 10/10/07	
20	Complete Koch testing	1 day	Thu 10/11/07	Thu 10/11/07	
21	Submit project update report to DWR	5 days	Thu 10/11/07	Wed 10/17/07	
22	Innovative PX flow schemes work shop	2 days	Thu 10/11/07	Fri 10/12/07	
23	**Hydranautics low energy membrane demonstration**	**68 days**	**Fri 10/12/07**	**Tue 1/15/08**	**$363,218.00**
24	Install membranes	2 days	Fri 10/12/07	Mon 10/15/07	
25	Ripening period	20 days	Tue 10/16/07	Mon 11/12/07	
26	9 flux and recovery points	25 days	Tue 11/13/07	Mon 12/17/07	
27	Most affordable point	20 days	Tue 12/18/07	Mon 1/14/08	
28	Complete Hydranautics testing	1 day	Tue 1/15/08	Tue 1/15/08	
29	Submit project update report to DWR	5 days	Tue 1/15/08	Mon 1/21/08	
30	Member workshop and progress report	2 days	Tue 1/15/08	Wed 1/16/08	
31	**DOW Hybrid Membrane Demonstration**	**49 days**	**Thu 1/17/08**	**Tue 3/25/08**	**$261,731.00**
32	Install DOW hybrid membranes	2 days	Thu 1/17/08	Fri 1/18/08	
33	DOW Hybrid Ripening period	15 days	Thu 1/17/08	Wed 2/6/08	
34	DOW Hybrid 9 flux and recovery points	18 days	Thu 2/7/08	Mon 3/3/08	
35	DOW Hybrid Most affordable point	15 days	Tue 3/4/08	Mon 3/24/08	
36	Complete Koch testing	1 day	Tue 3/25/08	Tue 3/25/08	
37	Submit project update report to DWR	5 days	Tue 3/25/08	Mon 3/31/08	
38	Order long lead interstage-PX hybrid items	45 days	Tue 3/25/08	Mon 5/26/08	
39	**Unbalanced PX high recovery testing**	**76 days**	**Wed 3/26/08**	**Wed 7/9/08**	**$405,949.00**
40	Install PX flow scheme membrane set	2 days	Wed 3/26/08	Thu 3/27/08	
41	Flush and base line membranes	10 days	Fri 3/28/08	Thu 4/10/08	
42	Exicute unbalance test protocl @ 9 points	18 days	Fri 4/11/08	Tue 5/6/08	
43	PX unbalanced most affordable point (24/7 for 2 months)	45 days	Wed 5/7/08	Tue 7/8/08	
44	Clean membranes	2 days	Wed 6/4/08	Thu 6/5/08	
45	Complete Unbalanced PX testing	1 day	Wed 7/9/08	Wed 7/9/08	
46	Submit project update report to DWR	5 days	Wed 7/9/08	Tue 7/15/08	
47	**Interstage-PX hybrid high recovery testing**	**86 days?**	**Wed 7/9/08**	**Wed 11/5/08**	**$459,364.00**
48	Reconfigure system for Interstage-PX hybrid design	10 days	Wed 7/9/08	Tue 7/22/08	
49	Exicute interstage-PX hybrid protocol 18 points	30 days	Wed 7/23/08	Tue 9/2/08	
50	Interstage-PX hybrid most affordable point (24/7 for 2 months)	45 days	Wed 9/3/08	Tue 11/4/08	
51	Clean membranes	2 days	Wed 10/1/08	Thu 10/2/08	
52	Complete Interstage-PX Hybrid testing	1 day?	Wed 11/5/08	Wed 11/5/08	
53	Complete ADC Prop 50 testing	1 day	Wed 11/5/08	Wed 11/5/08	
54	Write final report	30 days	Wed 11/5/08	Tue 12/16/08	
55	Submit final report, billing, conclude project	2 days	Wed 12/17/08	Thu 12/18/08	
56	Member/general workshop and publish results	2 days	Fri 12/19/08	Mon 12/22/08	
57	Project Duration	450 days	Tue 4/3/07	Mon 12/22/08	

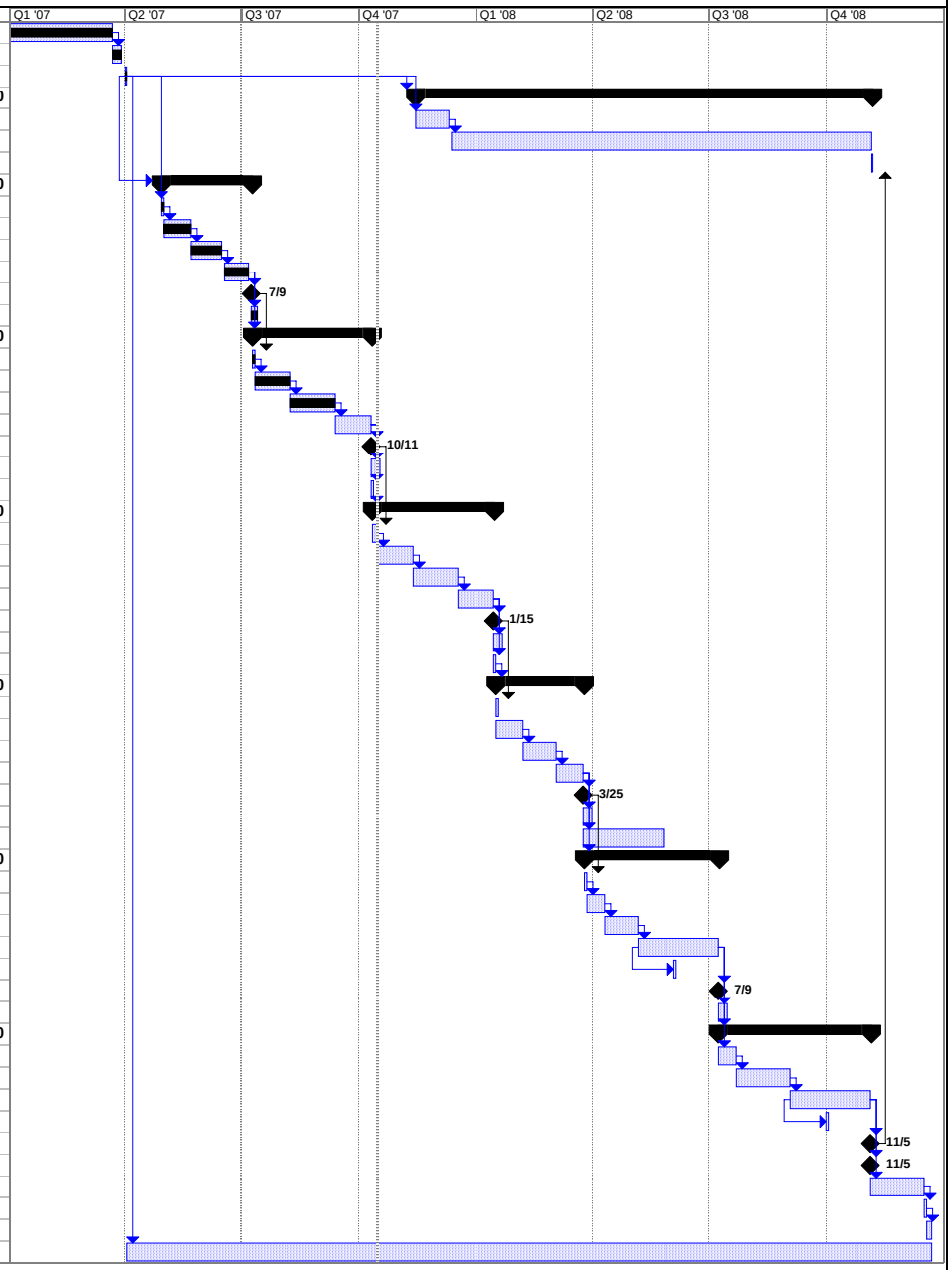

Project: ADC 2007 Project Schedule
Date: Mon 10/15/07

Task		Summary		Rolled Up Progress		Project Summary	
Progress		Rolled Up Task		Split		Group By Summary	
Milestone		Rolled Up Milestone		External Tasks		Deadline	

Attachments

1. ADC II Membership Participation List
2. Water Quality, Flow and Pressure and Power Data
3. Toray NPV analysis
4. Koch NPV analysis
5. Desalination and Water Reuse (DWR) Quarterly, Innovative Designs to be Tested in ADC II
6. IDA World Conference, Gran Canaria, ADC II Update

ADC Membership List 6-1-07

ADC Membership	Contact	Tel #	e-mail
California Department of Water Resources	Fawzi Karajeh, Ph.D.	916-651-9669	fkarajeh@water.ca.gov
California Energy Commission	Shahid Chaudhry	916-654-4858	Schaudhr@energy.state.ca.us
Carollo Engineers	Thomas F. Seacord, P.E.	208-376-2288	tseacord@carollo.com
City of Santa Cruz Water Department	Bill Kocher, Director	(831) 420-5200	bkocher@ci.santa-cruz.ca.us
David Brown Union Pumps - Textron	Rick Hammond	269 209 4599	rhammond@dbup.textron.com
Energy Recovery Inc.	GG Pique	510-483-7370	icameron@energy-recovery.com
FilmTec Corporation	Steven Coker	979 238-1815	LDJohnson@dow.com
Koch Membrane Systems	Rick Lesson	858-635-1053	rklesan@kochmembrane.com
Marin Municipal Water District	Bob Castle	415-945-1556	bcastle@marinwater.org
Metropolitan Municipal Water District of Southern California	Stephen N. Arakawa Warren Teitz	213-217-6000 (213) 217-7418	wteitz@mwdh2o.com
Municipal Water District of Orange County	Karl Seckel	(714) 963-3058	kseckel@mwdoc.com
Naval Facilities Engineering Service Center	Bill Varnava	805-982-6640	william.varnava@navy.mil
New Water Supply Coalition (US Desal Coalition)	Hal Furman	858-456-3502sd 202-737-0700wa	Hal.Furman@USDesal.org
Pentair - CodeLine Pressure Vessels	Rob Donofrio	909-476-7292	rdonofrio@pentairwater.com
Poseidon Resources	Nikolay Voutchkov	203-327-7740 ext 126	nvoutchkov@poseidon1.com
San Diego County Water Authority	Robert Yamada Cesar Lopez	(858) 522-6600 858-522-6745	ryamada@sdcwa.org
Sandia National Laboratories	Richard Kottenstette	(505) 845-3270	rkotten@sandia.gov
Toray Membranes	Randy Truby	858-679-0770	Truby.Randy@toraymem.com
US Bureau of Reclamation	Steve Dundorf Michelle Chapman	303-445-2263 303-445-2264	SDUNDORF@do.usbr.gov
West Basin Municipal Water District	Paul E. Shoenberger Phil Lauri	(310) 660-6218 (310) 660-6238	pauls@wcbwater.org
Zenon	Annyse Balkwill	905-465-3030 x3468	annyse.balkwill@ge.com

TIME			CALCULATED PARAMETERS			TEMP	PRESSURES										FLOWS				MAIN PANEL KW METER				VFD KW METER			
		Operation	RO	Flux	Power		P_{MF-in}	P_{MF-out}	P_{CF-in}	P_{CF-out}	$P_{PX-Feed\ In}$	$P_{PX-conc\ out}$	$P_{PX-boost\ suct}$	P_{F-SYS}	P_{C-SYS}	P_{P-SYS}	$Q_{F-HP\ Pump}$	$Q_{PX\ Pump}$	$Q_{Feed\ PX-In}$	Q_{P-SYS}	A_{sys}	P HP/PX	P booster	Power	PX power	HP Power	Feed Pump	
Date	Time	Time	Recovery %	Gfd	kWh/m3	Influent	(psi)	(psi)	(psi)	(psi)	(psi)	(psi)	(psi)	(psi)	(psi)	(psi)	(gpm)	(gpm)	(gpm)	(gpm)	amp	(kw)	(kw)	Factor	(kw)	(kw)	(kw)	Notes
MM/DD/YY	hh:mm	hh.hh				Temp F	1	2	3	4	5	6	7	8	9	10	11	12	13	14	15	16	17	18	19	20	21	
Toray membranes - TM800-400																												
5/30/2007	11:15	4151.28	42.3%	7.47	1.90	57.0	51.2	39.4	38.8	33.9	34.7	27.7	800	818	808	2.9	44.0	57.95	59.56	43.6	25.00	18.85	nd	0.900	0.90	17.00	5.00	
6/5/2007	11:30	4198.44	43.0%	7.46	1.87	58.0	51.2	38.4	37.8	32.9	34.0	27.1	790	807	798	2.5	44.0	57.60	57.60	43.5	24.50	18.48	nd	0.900	0.85	16.50	4.95	
6/6/2007	10:15	4218.73	42.6%	7.47	1.90	58.0	51.1	40.5	39.8	38.6	35.6	28.6	790	807	800	2.7	44.0	58.24	58.75	43.6	24.40	18.80	nd	0.900	0.85	16.50	4.93	bl
6/7/2007	9:25	4239.52	42.6%	7.46	1.87	58.0	51.2	40.7	40.0	38.8	33.7	27.1	795	815	802	2.5	43.5	57.80	58.70	43.5	24.40	18.50	nd	0.900	0.85	16.60	4.93	bl
6/11/2007	11:45	4256.49	43.1%	7.49	1.84	59.8	51.0	43.8	43.3	36.5	36.0	30.0	785	800	790	2.8	41.2	57.53	57.75	43.7	24.00	18.22	nd	0.898	0.90	16.30	4.90	jm
6/12/2007	9:30	4278.07	42.5%	7.47	1.87	60.0	51.0	22.4	21.9	20.5	15.5	9.7	780	795	785	2.5	42.5	57.50	59.10	43.6	24.50	18.55	nd	0.898	0.90	16.60	4.91	bl
6/13/2007	11:45	4299.24	42.7%	7.49	1.84	61.0	50.5	29.0	28.0	23.8	23.0	15.0	780	800	790	2.4	43.0	57.47	58.76	43.7	24.50	18.24	nd	0.900	0.90	16.30	4.95	bv
6/14/2007	9:00	4316.67	42.8%	7.47	1.82	62.0	50.8	39.0	38.0	32.5	32.0	25.5	770	795	790	2.4	43.5	57.66	58.32	43.6	23.80	18.06	nd	0.899	0.90	16.30	4.95	bv
6/19/2007	10:12	4341.84	42.5%	6.00	1.71	62.0	53.9	42.3	42.0	40.9	39.8	34.7	735	745	742	2.2	35.5	45.70	47.27	35.0	19.75	13.57	nd	0.842	0.50	12.10	4.65	bl
6/20/2007	10:10	4364.19	46.4%	6.00	1.78	61.5	54.0	44.2	43.9	43.0	41.9	38.4	780	790	785	1.3	32.8	39.68	40.39	35.0	19.80	14.15	nd	0.840	0.35	12.60	4.55	bl px out tds high. re-run point on 6-21
06/21/07	9:45	4386.12	47.0%	5.98	1.77	60.5	54.4	47.8	47.3	46.2	45.0	40.9	775	782	778	1.2	35.5	39.43	44.53	34.9	19.75	14.05	nd	0.845	0.29	12.60	4.59	bl Unbalanced PX to compensate low flo
06/22/07	10:20	4410.71	50.1%	5.98	1.85	62.0	54.5	39.5	39.0	38.1	36.9	33.3	808	819	815	0.9	36.0	34.71	40.95	34.9	20.44	14.68	nd	0.862	0.29	13.50	4.55	bl Unbalanced PX to compensate low flo
06/26/07	10:20	4432.57	41.8%	7.47	1.82	63.0	50.4	32.9	32.1	30.2	27.4	19.0	759	779	770	1.9	44.5	59.28	60.74	43.6	23.85	18.01	nd	0.900	0.95	15.19	4.95	bl
06/27/07	9:50	4454.19	45.8%	7.47	1.87	64.0	52.0	36.9	36.1	34.5	33.0	27.4	804	819	811	1.9	44.5	50.18	51.65	43.6	23.25	18.51	nd	0.902	0.61	16.90	4.83	bl
06/28/07	9:10	4475.80	49.4%	7.42	1.92	64.5	52.8	39.1	38.5	37.0	33.5	29.1	835	847	840	1.9	44.0	44.31	47.23	43.3	24.73	18.84	nd	0.902	0.48	17.35	4.75	bl Unbalanced PX to compensate low flo
06/29/07	9:55	4497.25	43.3%	8.91	1.95	65.0	47.5	29.5	28.3	25.8	23.8	14.1	805	832	819	3.1	51.5	68.02	68.10	52.0	29.92	23.04	nd	0.921	1.37	20.50	5.17	bl
07/03/07	nd	4520.51	45.9%	8.97	1.93	65.0	48.8	34.6	32.7	30.2	28.1	20.0	830	855	840	3.3	51.7	60.03	61.70	52.3	29.90	22.92	nd	0.918	0.97	20.90	5.11	bl
07/05/07	nd	4527.09	49.7%	8.97	1.98	65.5	50.0	43.3	42.5	40.2	38.6	33.0	880	890	885	3.3	51.7	52.55	52.92	52.3	30.40	23.47	nd	0.920	1.00	21.60	5.00	bv
07/06/07	nd	4532.36	43.4%	9.91	1.98	64.0	44.0	32.0	30.5	27.5	24.5	13.0	820	850	840	4.5	58.0	77.44	75.38	57.8	33.60	26.05	nd	0.922	1.80	24.10	5.40	bv
07/09/07	nd	4536.59	46.0%	9.98	2.01	62.5	46.5	37.0	35.8	32.8	29.7	21.0	857	883	870	4.0	56.5	67.31	68.44	58.2	34.60	26.53	nd	0.930	1.45	25.10	5.37	bl
07/10/07	nd	4543.50	50.3%	9.93	2.06	64.0	47.0	35.0	34.0	28.0	29.5	22.8	910	930	920	4.3	58.0	57.62	57.25	57.9	35.05	27.15	nd	0.922	0.90	26.10	5.20	bv
07/24/07	17:15	4564.69	50.4%	9.00	2.12	66.0	47.5	34.0	33.0	27.0	29.5	24.0	930	950	940	3.6	52.0	51.56	51.72	52.5	32.75	25.28	nd	0.922	0.7	23.5	4.7	bv
07/26/07	16:45	4591.27	50.2%	9.00	2.10	67.0	49.0	34.0	32.5	27.0	29.0	23.5	925	940	930	3.5	52.0	50.51	52.10	52.5	32.61	25.04	nd	0.925	0.7	23.3	4.9	bv
07/27/07	15:10	4607.91	50.6%	9.00	2.13	66.0	55.5	33.0	32.5	30.0	28.0	22.5	930	950	940	3.25	52.0	51.93	51.25	52.5	33.03	25.35	nd	0.923	0.8	23.5	5.8	bv
08/07/07	9:23	4637.68	50.3%	8.95	2.12	66.0	58.2	33.9	32.9	30.9	29.5	23.9	924	940	935	3.3	51.0	50.93	51.52	52.2	32.74	25.09	nd	0.921	0.65	23.2	6.05	bl
08/08/07	9:15	4658.32	50.3%	8.98	2.15	63.0	53.2	33.7	33.0	30.6	29.1	23.8	941	957	948	3.25	51.5	50.67	51.71	52.4	33.25	25.55	nd	0.921	0.66	23.7	5.39	bl
08/09/07	9:10	4680.36	50.3%	8.97	2.15	63.0	57.8	33.8	33.0	27.3	28.5	23.1	945	959	945	3.25	51.0	50.78	51.65	52.3	33.32	25.59	nd	0.92	0.65	23.75	6	bl
08/10/07	9:13	4701.86	50.4%	8.98	2.14	64.0	52.4	33.2	32.9	30.5	27.0	22.5	943	959	946	3.25	51.5	51.08	51.60	52.4	32.97	25.51	nd	0.922	0.65	23.63	5.3	bl
08/14/07	1:48	4721.01	50.2%	8.97	2.10	66.0	49.8	33.2	32.4	30.1	29.0	23.3	925	941	933	2.8	51.0	50.55	51.90	52.3	32.13	24.98	nd	0.926	0.66	23.19	5.07	bl
08/15/07	9:48	4739.81	50.1%	8.97	2.13	64.0	51.5	33.8	33.0	30.6	29.2	23.8	940	955	945	3.25	51.5	51.59	52.15	52.3	33.15	25.31	nd	0.925	0.65	23.49	5.15	bl
08/16/07	8:31	4761.17	50.2%	8.97	2.16	62.5	51.5	34.0	33.2	27.2	28.8	23.4	950	965	960	3.5	51.5	50.85	51.93	52.3	33.27	25.66	nd	0.924	0.68	23.84	5.15	bl
08/17/07	9:25	4784.47	50.2%	8.95	2.17	62.5	51.1	33.4	32.9	27.0	26.9	22.3	955	968	961	3.25	52.0	50.83	51.85	52.2	33.31	25.74	nd	0.923	0.67	23.9	5.12	bl
			MAP Average		2.12																							
			MAP Maximum		2.17																							
			MAP Minimum		1.98																							
Koch membranes - 400 sq ft																												
08/22/07	9:10	4805.09	42.3%	7.47	1.78	64.0	48.0	33.8	32.9	27.1	29.2	21.9	736	759	745	2.2	44.0	57.86	59.58	43.6	23.27	17.58	nd	0.899	0.95	15.6	4.68	bl
08/23/07	9:10	4827.55	42.5%	7.51	1.77	64.0	49.1	33.9	33.1	30.8	29.2	21.9	739	762	749	2.2	44.0	57.76	59.14	43.8	23.31	17.62	nd	0.900	0.95	15.6	4.81	bl
08/24/07	9:50	4850.52	42.4%	7.51	1.76	64.0	48.1	33.9	33.2	30.7	29.3	22.1	738	759	747	2.2	44.0	57.74	59.54	43.8	23.12	17.54	nd	0.897	0.95	15.6	4.65	bl
08/27/07	1:15	4856.07	42.6%	7.53	1.75	62.0	40.1	33.7	32.7	27.0	29.1	21.9	737	758	744	1.9	44.5	57.62	59.23	43.9	23.09	17.44	nd	0.903	0.94	15.6	3.77	bl
08/28/07	8:35	4875.27	42.6%	7.53	1.76	61.0	48.5	34.0	33.2	30.7	29.7	22.0	740	760	750	2.6	44.0	56.62	59.14	43.9	23.45	17.53	nd	0.900	0.95	15.6	4.70	bV
08/29/07	14:30	4903.54	42.7%	7.53	1.76	60.0	47.5	33.5	33.0	30.5	29.0	22.0	750	770	755	2.1	44.0	56.12	59.03	43.9	23.29	17.57	nd	0.901	0.95	15.7	4.80	bv
08/30/07	8:25	4919.93	42.5%	7.51	1.78	59.9	43.5	34.0	33.2	30.8	29.7	22.0	750	770	760	2.5	44.0	57.35	59.16	43.8	23.29	17.68	nd	0.902	0.95	15.8	4.10	bv
08/31/07	10:10	4942.55	42.6%	7.51	1.78	59.9	44.8	34.0	33.2	30.8	29.7	22.2	755	775	765	2.5	44.0	57.87	58.95	43.8	23.47	17.72	nd	0.902	0.95	15.8	4.25	bv
09/05/07	2:15	4977.24	42.3%	7.51	1.76	62.0	47.9	33.6	32.7	27.0	29.1	21.9	739	758	745	1.9	44.1	58.21	59.82	43.8	23.18	17.46	nd	0.902	1.04	15.5	4.05	bl
09/06/07	9:05	4994.49	42.5%	7.53	1.76	60.0	43.0	34.1	33.2	27.2	29.3	22.1	737	760	746	2.3	44.5	58.34	59.35	43.9	23.30	17.57	nd	0.905	1.05	15.6	4.05	bl
09/07/07	9:55	5019.27	42.3%	7.53	1.73	62.0	57.0	34.5	33.5	30.8	29.8	22.2	738	750	740	2.5	44.5	58.98	59.86	43.9	23.36	17.29	nd	0.898	1.00	15.3	5.90	bv
09/11/07	13:00	5044.4	42.9%	5.98	1.67	62.0	42.0	32.0	31.5	30.0	29.8	25.0	710	725	720	1.1	35.0	44.54	46.50	34.9	18.47	13.23	nd	0.852	0.55	11.8	3.30	bv
09/12/07	16:15	5071.67	45.7%	5.98	1.72	61.8	48.0	32.0	31.5	30.0	29.8	26.0	750	760	755	1.1	35.0	38.86	41.39	34.9	18.59	13.63	nd	0.853	0.40	12.1	3.85	bv px out tds high.
10/03/07	9:35	5269.17	48.9%	5.98	1.67	62.0	49.5	32.8	32.2	30.5	30.0	25.7	730	740	735	1.5	35.0	39.58	46.02	34.9	18.69	13.20	nd	0.845	0.45	12.0	4.15	bv
09/13/07	15:45	5093.8	50.3%	5.98	1.82	60.0	38.0	32.0	31.5	30.0	29.8	27.0	800	810	805	1.1	35.0	32.29	34.47	34.9	19.78	14.44	nd	0.859	0.30	12.9	2.80	bv px out tds high.
10/19/07	9:20	5438.31	42.5%	7.47	1.79	58.0	58.9	29.0	28.2	25.3	23.9	16.9	745	767	759	2.7	44.5	57.81	58.92	43.6	23.38	17.76	nd	0.899	1.05	15.7	6.05	bl
10/10/07	14:00	5303.19	42.6%	7.54	1.77	59.0	41.4	34.2	33.3	27.0	29.4	22.0	739	759	725	3.2	44.5	57.62	59.36	44.0	23.51	17.68	nd	0.905	1.07	15.7	4.95	bl
10/11/07	8:35	5321.8	42.6%	7.53	1.77	58.0	49.3	35.0	34.1	27.8	29.8	22.6	742	762	751	3.1	44.5	57.99	59.16	43.9	23.23	17.61	nd	0.903	0.95	15.7	4.88	bl
10/18/07	9:35	5414.55	42.7%	7.53	1.77	58.0	47.1	35.1	34.1	27.8	29.8	22.1	741	764	751	2.8	44.5	57.86	59.03	43.9	23.48	17.67	nd	0.894	1.05	15.7	4.45	bl

10/02/07	8:25	5244.08	42.9%	7.54	1.74	61.0	46.8	34.8	34.0	31.0	29.9	22.6	735	755	750	3.1	44.0	57.13	58.53	44.0	22.82	17.35	nd	0.901	0.95	15.6	4.45	bv
09/14/07	16:35	5107.02	43.2%	7.51	1.77	60.0	46.0	34.0	33.0	30.5	29.0	22.0	750	765	760	2.2	44.0	57.32	57.55	43.8	23.06	17.58	nd	0.902	0.95	15.8	4.50	bv
09/17/07	14:40	5113.22	45.8%	7.51	1.79	60.0	39.0	33.2	32.7	30.4	29.3	23.7	767	784	778	2.2	44.5	49.68	51.84	43.8	23.31	17.79	nd	0.905	0.95	16.2	3.39	bl
10/04/07	16:00	5295.92	47.2%	7.51	1.80	63.0	50.0	33.0	32.5	30.0	29.5	24.0	795	810	800	2.1	44.0	43.06	47.48	43.8	23.57	17.92	nd	0.905	0.55	16.4	4.75	bv
09/18/07	9:00	5131.54	49.9%	7.47	1.88	62.0	45.0	33.1	32.5	27.1	29.7	25.3	820	835	825	2.4	44.5	42.41	43.85	43.6	24.65	18.57	nd	0.907	0.50	17.2	3.82	bl
09/19/07	12:15	5150.03	42.3%	8.93	1.82	63.0	49.6	35.9	34.9	27.8	29.5	19.6	759	785	768	3.6	52.0	69.56	70.98	52.1	28.52	21.58	nd	0.916	1.60	19.1	5.71	bl
09/20/07	9:26	5169.9	45.8%	8.95	1.86	62.0	48.2	35.1	34.2	27.6	29.6	21.8	798	822	805	3.6	52.0	60.16	61.85	52.2	28.64	22.05	nd	0.920	1.10	19.9	5.16	bl
09/21/07	11:13	5194.13	50.1%	8.90	1.93	63.0	48.3	34.1	33.3	26.9	29.4	23.8	845	864	855	3.4	52.0	50.22	51.77	51.9	29.64	22.79	nd	0.922	0.90	21.1	4.88	bl
10/17/07	9:00	5392.24	42.2%	9.98	1.89	58.5	52.3	32.1	30.7	23.1	23.7	11.9	788	831	805	5.1	57.5	77.42	79.64	58.2	33.30	24.95	nd	0.926	2.34	23.4	6.65	bl
09/25/07	14:08	5204.98	42.7%	9.98	1.89	65.0	49.5	36.7	35.3	27.1	29.1	16.9	768	805	785	4.3	57.0	77.36	77.97	58.2	32.80	25.01	nd	0.933	2.25	22.8	6.35	bl
10/16/07	14:30	5375.55	45.8%	9.96	1.97	60.0	54.1	30.2	29.1	22.2	23.4	14.9	829	863	843	4.3	58.0	66.68	68.78	58.1	33.81	25.95	nd	0.934	1.66	24.5	6.53	bl
09/26/07	17:00	5212.75	46.3%	9.98	1.89	65.0	52.0	35.5	34.2	30.8	29.0	20.0	810	840	825	4.2	57.0	66.96	67.62	58.2	32.50	25.03	nd	0.925	1.60	23.3	6.3	bv
10/11/07	14:00	5325.75	49.6%	10.01	2.00	59.0	43.2	35.8	34.5	27.2	29.4	22.2	874	899	882	4.7	58.0	56.62	59.37	58.4	34.64	26.59	nd	0.930	1.07	25.7	4.68	bl
10/12/07	9:08	5344.85	49.7%	9.98	2.03	59.0	55.9	35.8	34.7	27.6	29.5	22.4	877	900	885	4.8	58.0	56.75	58.99	58.2	34.78	26.78	nd	0.927	1.08	25.8	6.37	bl
09/27/07	15:50	5221.39	50.7%	9.99	1.96	65.0	54.8	34.8	33.5	30.5	29.2	22.3	860	885	875	4.2	57.0	55.57	56.60	58.3	33.76	25.91	nd	0.928	0.95	25.1	6.15	bv

Water Quality Data

TIME			pH			CONDUCTIVITY						TDS							TURBIDITY		SDI	BORON			OTHER					
				pH				Conductivity (mS/cm)						TDS (mg/L)					Turbidity (NTU)		Density Index		Boron (mg/L)			Inhibitor Pump			FEED VFD	
Date	Time	Operation Time	$pH_{F\text{-}sys}$	$pH_{P\text{-}sys}$	$pH_{C\text{-}sys}$	$C_{CF\text{-}out}$	$C_{F\text{-}PX\text{-}out}$	$C_{F\text{-}sys}$	$C_{P\text{-}sys}$	$C_{C\text{-}sys}$	$C_{C\text{-}PX\text{-}out}$	$TDS_{CF\text{-}out}$	$TDS_{F\text{-}PX\text{-}out}$	PX % Inc	$TDS_{F\text{-}sys}$	$TDS_{P\text{-}sys}$	$TDS_{C\text{-}sys}$	$TDS_{C\text{-}PX\text{-}out}$	$NTU_{MF\text{-}in}$	$NTU_{CF\text{-}out}$	$SDI_{CF\text{-}out}$	$B_{CF\text{-}out}$	$B_{F\text{-}sys}$	$B_{P\text{-}sys}$	V_{TANK}	Speed	HP VFD Speed	PX VFD Speed	Speed	Notes
MM/DD/YY	hh:mm	hh.hh	SC5	SC11	SC6	SC3	SC4	SC5	SC11	SC6	SC7	SC3	SC4		SC5	SC11	SC6	SC7	CART	meter	CART	SC3	SC5	SC11	(gallons)	(gph)	(Hertz)	(Hertz)	(Hertz)	
Toray Membranes - TM800-400																														
05/30/07	11:25	4151.46	7.90	4.40	7.61	50.70	52.35	51.62	322.30	84.62	81.53	32.56	33.77	3.7%	33.23	154.20	60.80	57.95	nd	0.040	4.0	nd	nd	nd	7.0	60/75	44.85	33.08	61.20	
06/05/07	12:05	4199.43	7.88	6.77	7.73	49.81	53.23	51.63	353.50	84.01	82.22	31.88	34.41	7.9%	33.27	169.50	60.30	58.57	nd	0.057	4.0	nd	nd	nd	11.0	70/75	33.28	44.94	61.20	
06/06/07	10:56	4219.43	7.91	7.69	7.69	50.30	52.13	51.05	333.90	83.38	81.08	32.24	33.61	4.2%	32.84	159.80	59.75	57.53	nd	0.051	3.9	nd	nd	nd	8.0	70/75	44.92	33.13	61.20	bl
06/07/07	9:58	4240.04	7.73	6.01	7.6	50.13	52.25	51.10	328.80	83.46	81.03	32.16	33.67	4.7%	32.87	157.40	59.77	57.48	nd	0.044	3.6	nd	nd	nd	5.2	70/75	44.91	33.08	61.20	bl
06/11/07	12:08	4256.76	8.07	6.75	7.83	49.62	52.71	50.86	355.70	82.83	81.73	32.62	33.62	3.1%	32.73	170.80	59.72	57.68	1.852	0.067	4.0	nd	nd	nd	23.5	70/75	44.98	33.19	61.20	bv
06/12/07	9:51	4278.47	7.90	6.4	7.77	49.27	51.03	49.98	343.20	80.85	79.22	31.57	32.85	4.1%	32.10	164.40	57.44	55.84	1.345	0.086	3.7	nd	nd	nd	21.0	70/70	44.91	33.49	61.20	bl
06/13/07	12:00	4299.52	8.10	7.05	7.9	49.04	50.86	49.93	355.70	80.89	78.95	31.40	32.72	4.2%	32.06	170.30	57.39	55.57	0.933	0.093	4.1	nd	nd	nd	18.0	70/77	44.92	33.35	61.20	bv
06/14/07	9:15	4316.9	8.10	6.96	7.89	48.97	51.31	49.86	363.30	81.13	79.33	31.37	33.06	5.4%	32.04	174.20	57.62	55.92	0.961	0.095	4.1	nd	nd	nd	15.8	70/75	44.92	33.34	61.20	bv
06/19/07	10:30	4342.16	7.99	6.29	7.79	48.88	51.57	49.87	475.50	80.39	78.43	31.28	33.21	6.2%	32.03	229.30	57.01	55.18	1.056	0.067	3.4	nd	4.6	0.91	12.5	70/75	35.83	27.51	61.20	bl
06/20/07	10:31	4364.54	7.97	6.47	7.85	49.03	53.22	50.76	519.30	85.11	82.68	31.45	34.43	9.5%	32.73	251.10	61.44	59.01	1.122	0.092	3.9	nd	4.7	0.94	9.7	70/75	35.86	24.58	61.20	bl px out tds high. re-run point on 6-21
06/21/07	10:05	4386.46	7.87	6.39	7.77	48.78	51.86	49.95	453.00	83.80	80.41	31.23	33.42	7.0%	32.08	218.20	60.05	56.94	0.802	0.079	3.9	nd	4.6	0.88	7.5	70/75	35.85	25.02	61.20	bl
06/22/07	10:36	4410.98	7.73	5.96	7.57	48.86	51.73	49.91	492.80	87.71	82.49	31.30	33.35	6.5%	32.07	237.90	63.60	58.81	0.771	0.057	3.8	nd	4.6	0.95	24.3	70/75	36.08	22.45	61.20	bl
06/26/07	10:50	4433.05	7.79	5.91	7.66	48.83	51.12	49.78	371.80	80.13	78.28	31.27	32.94	5.3%	31.97	178.50	56.71	55.03	1.121	0.087	3.6	nd	4.8	0.80	21.8	70/75	45.19	34.07	61.20	bl
06/27/07	10:10	4454.51	7.91	6.22	7.72	48.81	51.39	49.91	397.80	84.82	82.69	31.26	33.11	5.9%	32.05	191.10	60.98	59.00	0.826	0.062	3.8	nd	4.7	0.81	18.5	70/75	45.20	29.77	61.20	bl
06/28/07	9:25	4476.05	7.96	6.32	7.75	48.85	51.71	49.99	429.60	88.34	85.65	31.30	33.35	6.5%	32.12	206.70	64.14	61.70	0.757	0.085	4.3	nd	4.7	0.86	15.8	70/75	45.19	27.13	61.20	bl
06/29/07	10:13	4497.56	8.02	6.14	7.83	48.63	51.44	50.06	307.40	81.49	80.02	31.15	33.15	6.4%	32.17	146.90	57.96	56.58	0.663	0.1	4.7	nd	4.7	0.67	12.6	70/75	54.01	38.91	61.20	bl
07/03/07	8:45	4520.82	7.93	6.03	7.78	48.84	51.07	49.63	335.80	84.83	82.52	31.27	32.88	5.1%	31.87	160.90	61.01	58.87	1.127	0.102	5.0	nd	4.7	0.74	9.7	70/75	53.99	34.69	61.20	bl
07/05/07	16:25	4527.33	8.12	7.84	7.88	49.18	52.07	50.38	385.80	90.10	87.82	31.54	33.59	6.5%	32.39	185.40	65.66	63.58	0.769	0.118	5.1	nd	4.3	0.79	9.0	50/70	53.99	31.14	61.20	bv
07/06/07	14:45	4532.55	8.13	6.59	7.87	49.05	50.73	49.99	290.70	81.29	79.88	31.46	32.65	3.8%	32.12	138.80	57.80	56.45	0.87	0.1	4.8	4.2	4.1	0.65	8.0	70/70	60.00	42.39	61.20	bv
07/09/07	13:50	4536.97	7.87	5.88	7.71	48.86	52.06	50.27	305.30	84.78	83.51	31.27	33.59	7.4%	32.27	145.80	60.93	59.72	1.383	0.082	4.3	nd	4.3	0.69	7.5	70/70	60.00	39.28	61.20	bl
07/10/07	16:40	4543.67	8.07	7.51	7.82	48.84	51.42	49.90	346.10	90.52	88.04	31.34	33.12	5.7%	32.06	165.80	66.15	63.79	1.204	0.142	4.9	nd	4.2	0.74	6.0	70/70	60.00	33.37	61.20	bv
07/24/07	17:25	4564.92	7.87	5.51	7.97	48.86	52.21	50.12	449.70	88.35	90.23	31.36	33.67	7.4%	32.23	216.60	65.88	64.07	0.889	0.074	3.8	nd	nd	0.95	25.8	70/70	54.70	30.56	60.17	bv
07/26/07	16:50	4591.4	7.84	5.98	7.85	48.85	51.69	49.95	460.50	90.25	88.03	31.30	33.38	6.6%	32.16	222.20	65.90	63.76	0.759	0.076	3.9	nd	nd	nd	21.9	70/70	54.67	30.21	60.95	bv
07/27/07	15:25	4607.78	7.94	5.82	7.78	48.84	51.86	50.11	425.50	90.00	88.08	31.30	33.47	6.9%	32.20	205.10	65.64	63.71	0.971	0.071	2.9	nd	5.3	nd	20.0	70/70	54.66	30.64	64.80	bv
08/07/07	9:36	4637.89	8.09	5.79	7.74	48.85	52.25	50.14	421.20	90.67	88.56	31.28	33.74	7.9%	32.27	202.60	66.29	64.33	1.08	0.096	4.9	nd	nd	nd	15.7	70/75	53.88	30.14	66.00	bl
08/08/07	9:27	4658.51	7.91	5.82	7.69	48.66	51.64	49.88	370.90	90.34	87.74	31.12	33.27	6.9%	32.02	177.90	65.93	63.54	0.76	0.086	4.5	nd	nd	nd	12.6	70/75	53.85	30.15	63.30	bl
08/09/07	9:37	4680.82	7.93	5.82	7.69	48.65	51.58	49.79	360.70	90.35	87.82	31.11	33.23	6.8%	31.97	173.00	65.94	63.69	1.173	0.187	14.9	nd	nd	nd	9.8	70/75	53.84	30.15	65.95	bl
08/10/07	9:24	4702.05	7.97	5.96	7.73	48.69	51.66	49.84	360.10	90.02	87.51	31.12	33.30	7.0%	32.00	172.70	65.68	63.35	0.672	0.103	5.1	4.6	4.5	0.82	6.5	75/85	53.85	30.21	62.85	bl
08/14/07	2:14	4721.44	7.97	6.07	7.74	48.89	51.86	50.02	413.70	89.63	87.44	31.28	33.42	6.8%	32.12	198.80	65.36	63.27	0.789	0.074	4.7	4.6	4.7	0.89	23.0	80/85	53.81	30.35	61.85	bl
08/15/07	10:18	4740.31	7.91	6.27	7.67	48.95	51.86	50.01	377.30	90.15	87.89	31.29	33.43	6.8%	32.14	181.20	65.80	63.72	0.865	0.065	3.9	nd	nd	nd	20.2	75/80	53.82	30.33	62.29	bl
08/16/07		4761.36	7.82	5.82	7.61	48.77	51.74	49.92	344.60	90.69	88.25	31.21	33.34	6.8%	32.06	165.10	66.27	64.03	0.799	0.058	4.0	nd	nd	nd	17.3	70/75	53.82	30.26	61.06	bl
08/17/07	9:35	4784.63	7.81	5.83	7.62	48.67	51.77	50.04	345.40	90.45	87.94	31.14	33.36	7.1%	32.15	165.30	66.11	63.71	0.624	0.061	4.3	4.5	5.3	2.5	14.2	70/75	53.79	30.27	61.94	bl
												MAP Average		7%		188.83						MAP Average		1.19						
												MAP Maximum		8%		222.20						MAP Maximum		2.5						
												MAP Minimum		6%		165.10						MAP Minimum		0.79						
Koch membranes - 400 sq ft																														
08/22/07	9:23	4805.31	7.91	7.52	7.73	48.86	50.91	49.67	529.30	80.90	78.61	31.30	32.74	4.6%	31.88	256.00	57.42	55.31	0.543	0.068	4.0	nd	nd	nd	11.3	70/75	45.12	34.39	59.82	bl
08/23/07	9:27	4827.84	7.93	7.54	7.75	48.88	50.81	49.57	516.70	80.84	78.51	31.29	32.69	4.5%	31.83	249.70	57.36	55.22	0.791	0.067	3.9	nd	nd	nd	8.0	70/75	45.12	34.39	60.76	bl
08/24/07	10:05	4850.75	7.88	7.36	7.69	49.04	50.86	49.79	531.20	81.01	78.74	31.42	32.73	4.2%	31.97	256.90	57.51	55.45	0.803	0.066	3.9	nd	nd	nd	5.0	70/75	45.12	34.32	59.93	bl
08/27/07	1:35	4856.41	7.81	6.95	7.64	48.72	50.65	49.53	590.40	81.14	78.76	31.17	32.55	4.4%	31.78	286.00	57.62	55.45	0.482	0.061	3.5	nd	nd	nd	24.0	70/75	45.09	34.34	55.24	bl
08/28/07	8:45	4875.44	7.84	6.73	7.66	48.78	50.79	49.56	546.80	80.80	78.83	31.28	32.69	4.5%	31.79	264.60	57.34	55.48	0.563	0.059	2.3	nd	nd	nd	21.5	70/75	45.12	34.57	59.93	bv
08/29/07	14:40	4903.70	7.77	6.31	7.59	48.56	50.62	49.43	524.20	81.15	78.83	31.10	32.56	4.7%	31.76	253.20	57.58	55.35	0.671	0.043	2.7	4.5	4.5	1.3	17.5	70/75	45.12	34.39	60.18	bv
08/30/07	8:35	4920.07	7.80	6.37	7.63	48.79	50.72	49.54	497.70	80.85	78.55	31.22	32.62	4.5%	31.78	239.90	57.36	55.16	0.691	0.042	1.9	nd	nd	nd	15.0	70/75	45.12	34.48	56.96	bv
08/31/07	10:25	4942.80	7.85	6.38	7.60	48.98	50.90	49.72	489.40	80.97	78.58	31.37	32.74	4.4%	31.90	236.30	57.44	55.31	0.645	0.042	2.6	nd	nd	nd	12.0	70/75	45.12	34.62	57.92	bv
09/05/07	2:25	4977.42	7.81	6.91	7.67	48.92	51.24	49.87	571.60	80.47	78.49	31.35	32.95	5.1%	32.03	276.60	57.00	55.15	0.643	0.065	3.0	nd	nd	nd	7.5	70/75	45.12	35.32	60.44	bl
09/06/07	9:20	4994.74	7.78	6.41	7.64	48.90	51.32	49.96	542.70	80.77	78.64	31.32	33.02	5.4%	32.08	262.50	57.25	55.33	0.755	0.07	3.1	4.5	4.5	1.4	5.1	70/75	45.14	35.40	56.85	bl
09/07/07	10:05	5019.44	7.93	7.36	7.73	49.03	51.03	49.85	624.70	80.35	78.44	31.43	32.90	4.7%	32.03	302.60	56.87	55.13	0.894	0.051	3.1	nd	nd	nd	22.1	70/75	45.12	35.07	65.25	bv
09/11/07	13:10	5044.56	7.87	6.23	7.78	48.82	51.77	49.97	798.40	80.46	78.67	31.24	33.35	6.8%	32.09	388.30	57.07	55.44	0.384	0.039	2.7	4.8	4.7	1.6	18.5	70/75	35.71	28.45	54.30	bv
09/12/07	16:25	5071.85	7.83	6.18	7.66	48.73	52.46	50.23	818.60	84.47	81.68	31.14	33.82	8.6%	32.23	400.70	60.61	58.02	0.427	0.036	2.7	4.7	4.7	1.6	15.0	70/75	35.74	25.68	57.60	bv px out tds high.
10/03/07	9:45	5269.35	7.92	6.84	7.75	48.73	50.90	49.47	841.70	82.58	79.11	31.21	32.83	5.2%	31.76	411.80	58.95	55.73	0.567	0.055	2.2				9.5	70/75	35.86	26.10	58.72	bv
09/13/07	16:10	5094.23	7.77	6.49	7.58	48.70	54.98	51.05	881.60	90.32	87.05	31.25	35.75	14.4%	32.86	431.70	65.91	62.70	0.285	0.038	3.2	4.5	4.8	1.6	12.0	70/75	35.85	23.10	51.27	bv px out tds high.
10/19/07	9:33	5438.54	7.84	6.31	7.71	48.89	51.32	49.77	519.9	81.02	78.94	31.27	33.07	5.8%	31.96	251.20	57.45	55.57	0.648	0.176	6.8				10.2	70/75	45.06	35.57	66.00	bl
10/10/07	16:08	5303.34	7.78	6.24	7.63	48.60	51.29	49.81	598.80	80.43	78.89	31.02	32.99	6.4%	31.95	290.00	56.95	55.53	0.588	0.093	3.8				27.7	70/75	45.28	36.02	56.09	bl
10/11/07	8:52	5322.08	7.78	6.21	7.65	49.04	50.79	49.58	563.9	81.09	78.79	31.41	32.68	4.0%	31.83	273.00	57.63	55.49	0.699	0.103	3.2				25.1	70/75	45.09	34.72	60.49	bl
10/18/07	9:57	5414.92	7.81	6.27	7.67	48.84	51.15	49.79	532.5	80.94	78.87	31.26	32.93	5.3%	31.98	253.10	57.45	55.54	0.569	0.180	7.6				13.1	70/75	45.06	35.63	58.76	bl
10/02/07	8:40	5244.29	7.88	6.19	7.73	48.83	51.08	49.63	634.20	80.86	78.98	31.30	32.91	5.1%	31.87	307.80	57.37	55.63	0.559	0.055	3.6				12.2	70/75	45.26	34.72	58.75	bv
09/14/07	16:45	5107.14	7.84	6.50	7.65	48.73	51.43	50.00	588.40	81.15	79.23	31.24	33.10	6.0%	32.12	284.70	57.62	55.84	0.447	0.037	3.0	4.6	4.7	1.3	10.5	70/75	45.22	34.92	58.75	bv
09/17/07	14:55	5113.46	7.94	7.21	7.76	48.75	51.46	49.78	666.80	84.89	82.45	31.20	33.09	6.1%	31.97	323.70	60.98	58.72	0.725	0.080	3.1	4.9	4.8	1.4	9.7	70/75	45.06	31.27	53.83	bl

Water Quality Data

10/04/07	16:10	5296.06	8.00	7.23	7.70	48.72	50.94	49.48	749.90	88.17	85.08	31.19	32.75	5.0%	31.80	365.20	61.16	59.26	0.684	0.094	4.3				5.5	7075	45.09	28.14	60.73	bv
09/18/07	9:20	5131.86	7.98	7.05	7.75	49.02	52.94	50.49	780.30	90.39	88.07	31.42	34.22	8.9%	32.47	380.60	66.02	63.85	0.398	0.074	3.2	4.7	4.9	1.6	7.5	70/75	45.05	27.51	56.27	bl px out tds high.
09/19/07	12:37	5150.4	8.01	7.65	7.84	49.16	51.21	49.91	563.30	80.79	78.97	31.48	32.96	4.7%	32.07	272.70	57.27	55.67	0.754	0.081	4.3	4.7	4.8	1.3	4.6	70/75	53.65	40.84	62.99	bl
09/20/07	9:52	5170.33	7.96	7.14	7.76	48.91	51.19	49.83	563.20	84.88	82.40	31.32	32.96	5.2%	32.01	272.70	61.01	58.74	0.552	0.076	3.6	4.8	4.9		22.7	70/75	53.63	36.18	61.21	bl
09/21/07	11:33	5194.57	7.96	6.85	7.73	48.86	51.39	49.87	633.10	90.52	87.67	31.25	33.11	6.0%	32.02	307.00	66.09	63.46	0.514	0.079	3.6	4.7	4.9	1.4	19.1	70/75	53.58	31.29	60.32	bl
10/17/07	9:15	5392.50	7.83	6.17	7.69	48.91	50.93	49.73	396.6	80.18	79.02	31.28	32.79	4.8%	31.92	190.50	56.75	55.64	1.377	0.201	11.4				16.3	70/75	60.00	46.56	66.00	bl
09/25/07	14:27	5205.27	8.04	7.73	7.86	48.88	51.52	49.81	558.20	80.25	79.21	31.25	33.17	6.1%	31.96	270.10	56.83	55.79	0.865	0.078	3.4				17.6	70/75	60.00	46.05	64.98	bl
10/16/07	14:48	5375.85	7.93	6.61	7.77	48.87	51.76	49.99	470.6	84.56	83.08	31.21	33.36	6.9%	32.09	226.70	60.71	59.31	0.722	0.109	3.6				18.5	70/75	60.00	41.48	66.00	bl
09/26/07	17:05	5212.84	8.07	7.22	7.85	48.73	51.61	49.61	607.80	84.73	83.25	31.17	33.25	6.7%	31.87	295.10	60.73	59.35	0.692	0.054	3.2				16.5	70/75	60.00	40.40	65.23	bv
10/11/07	14:25	5326.13	7.76	6.26	7.64	49.31	52.03	50.26	518.8	90.25	87.35	31.55	33.29	5.5%	32.18	250.50	65.72	63.10	0.944	0.090	3.2				24.5	70/75	60.00	35.70	58.71	bl
10/12/07	9:28	5345.20	7.81	6.16	7.62	48.78	51.61	50.02	492.9	90.08	87.76	31.24	33.30	6.6%	32.14	238.00	65.74	63.58	0.952	0.172	7.2				22.1	70/75	60.00	36.03	66.00	bl
09/27/07	15:55	5221.52	8.05	7.03	7.8	48.74	51.60	49.73	668.50	90.59	88.48	31.23	33.26	6.5%	31.93	324.20	66.16	64.15	0.647	0.054	4.0				15.5	70/75	59.94	34.42	65.46	bv

FIGURE X. Estimated Costs for 50-MGD SWRO WTP (Toray TM 800-400)

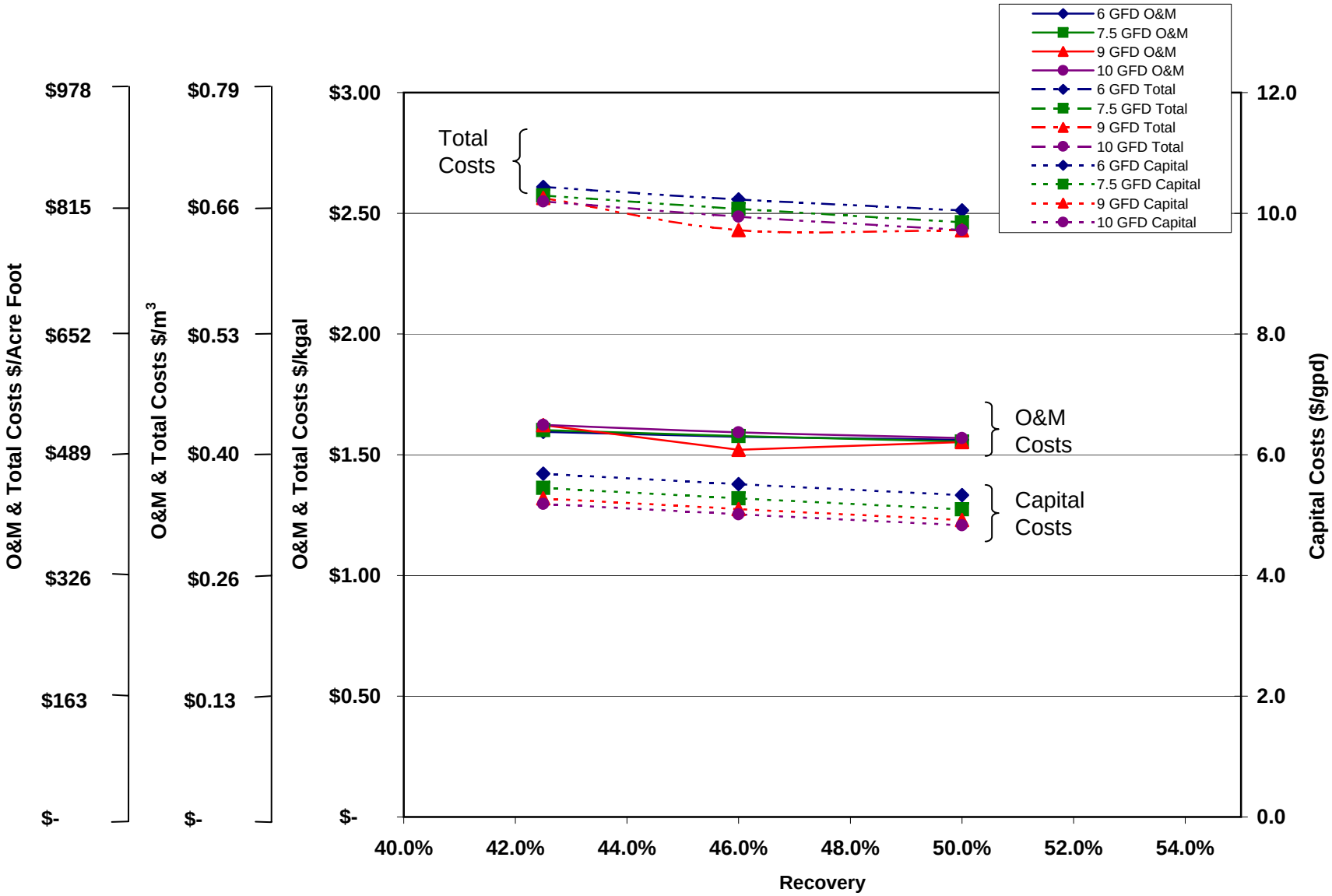

FIGURE X: Toray TM 800-400 Specific Power

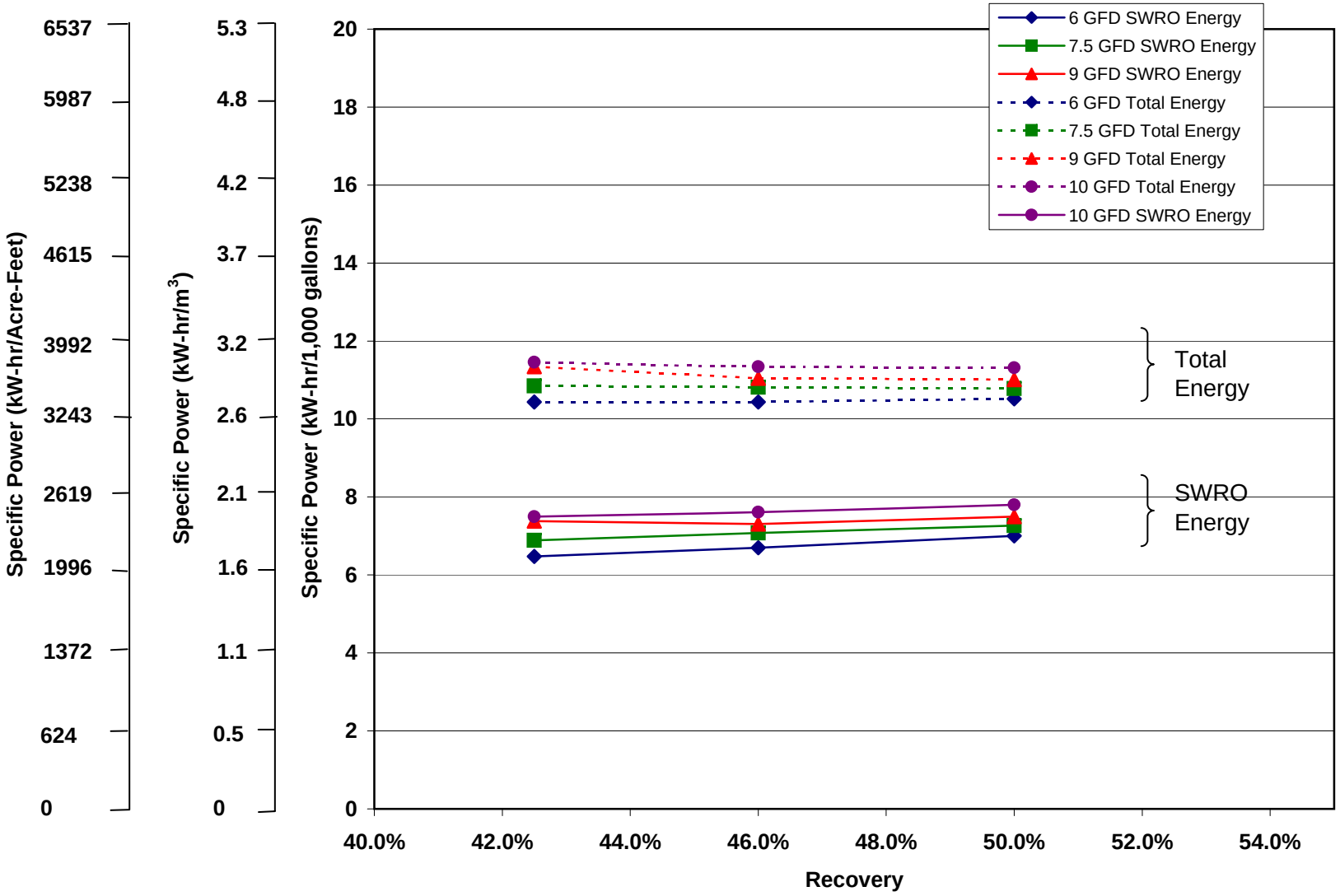

	Capital Cost	O&M Cost	Present Value	Annual Cost
6 GFD, 42.5% Recovery	$ 270,108,101	$ 27,657,458 per year	$ 695,271,012	$ 45,228,377 per year
6 GFD, 46% Recovery	$ 261,803,985	$ 27,302,595 per year	$ 681,511,788	$ 44,333,320 per year
6 GFD, 50% Recovery	$ 253,216,397	$ 27,080,292 per year	$ 669,506,855	$ 43,552,382 per year
7.5 GFD, 42.5% Recovery	$ 258,952,168	$ 27,776,606 per year	$ 685,946,684	$ 44,621,816 per year
7.5 GFD, 46% Recovery	$ 250,649,846	$ 27,351,099 per year	$ 671,103,282	$ 43,656,232 per year
7.5 GFD, 50% Recovery	$ 242,060,464	$ 26,950,171 per year	$ 656,350,649	$ 42,696,552 per year
9 GFD, 42.5% Recovery	$ 250,600,977	$ 28,142,757 per year	$ 683,224,125	$ 44,444,710 per year
9 GFD, 46% Recovery	$ 242,298,106	$ 26,371,759 per year	$ 647,696,685	$ 42,133,599 per year
9 GFD, 50% Recovery	$ 233,709,274	$ 26,925,433 per year	$ 647,619,172	$ 42,128,557 per year
10 GFD, 42.5% Recovery	$ 246,425,382	$ 28,160,581 per year	$ 679,322,530	$ 44,190,905 per year
10 GFD, 46% Recovery	$ 238,121,962	$ 27,617,051 per year	$ 662,663,727	$ 43,107,226 per year
10 GFD, 50% Recovery	$ 229,533,678	$ 27,202,896 per year	$ 647,708,873	$ 42,134,392 per year

Interest	5.0%	
Inflation	3%	
Project Life	30	years

	Capital Cost	O&M Cost	Treatment Cost	
6 GFD, 42.5% Recovery	$ 5.69 per gpd	$ 1.60 per kgal	$ 2.61 per kgal	$ 850 per AF
6 GFD, 46% Recovery	$ 5.51 per gpd	$ 1.57 per kgal	$ 2.56 per kgal	$ 833 per AF
6 GFD, 50% Recovery	$ 5.33 per gpd	$ 1.56 per kgal	$ 2.51 per kgal	$ 819 per AF
7.5 GFD, 42.5% Recovery	$ 5.45 per gpd	$ 1.60 per kgal	$ 2.57 per kgal	$ 839 per AF
7.5 GFD, 46% Recovery	$ 5.28 per gpd	$ 1.58 per kgal	$ 2.52 per kgal	$ 821 per AF
7.5 GFD, 50% Recovery	$ 5.10 per gpd	$ 1.55 per kgal	$ 2.46 per kgal	$ 802 per AF
9 GFD, 42.5% Recovery	$ 5.28 per gpd	$ 1.62 per kgal	$ 2.56 per kgal	$ 835 per AF
9 GFD, 46% Recovery	$ 5.10 per gpd	$ 1.52 per kgal	$ 2.43 per kgal	$ 792 per AF
9 GFD, 50% Recovery	$ 4.92 per gpd	$ 1.55 per kgal	$ 2.43 per kgal	$ 792 per AF
10 GFD, 42.5% Recovery	$ 5.19 per gpd	$ 1.62 per kgal	$ 2.55 per kgal	$ 831 per AF
10 GFD, 46% Recovery	$ 5.01 per gpd	$ 1.59 per kgal	$ 2.49 per kgal	$ 810 per AF
10 GFD, 50% Recovery	$ 4.83 per gpd	$ 1.57 per kgal	$ 2.43 per kgal	$ 792 per AF

Revision Log:

Date	Description
1/25/2006	Added total treatment specifc power to pumping section.
2/3/2006	Added revision log to summary sheet.
2/3/2006	Changed membrane pricing from $700/elem to $475/elem per Lance Johnson's recommendation.
3/22/2006	Changed SW30HRLE-400i membrane pricing to $500 per FilmTec's recommendation.
3/22/2006	Changed membrane life per FilmTec's Cumulitive Annual Replacement Rate Matrix
3/22/2006	Revised membrane replacement cost calculation.
3/22/2006	Corrected membrane element surface area.
3/23/2006	Removed reference to "per train" in cell B49 on the 9 GFD worksheet.
4/5/2006	Increased number of operators from 10 to 25 per recommendation of N. Voutchkov
4/5/2006	Increased the maintainance costs from 0.5% of capital cost to 1.5% of capital cost
4/5/2006	Added $10-million for permitting costs.
4/9/2006	Included capital cost for intake pump station.
4/10/2006	Included capital & O&M Cost for solids handling and disposal.
4/10/2006	Changed unit cost for electricity from $0.12/kW-hr to $0.08/kW-hr based upon recommendations from
4/10/2006	Changed bond payment period from 20 years to 30 years based upon recommendations from SDCWA
4/10/2006	Changed interest rate from 3.5% to 5% based upon recommendations from SDCWA & West Basin
4/25/2006	Added $3-million for FW Storage. Adjusted Intake and Filtered water lift station costs and finished wat
7/17/2007	Added 10gfd, Changed Recovery (delete 35%, added 46%) Adjusted Cartridge Filter Cost.
7/18/2007	Adjusted Carbon Dioxide Dosing Cost
7/19/2007	Corrected all motor efficiencies from 90% to 95% cell b,c,d23

10 GFD Detailed Costs

Plant Utilization Factor	95%

	Scenario 1	Scenario 2	Scenario 3
Flux, GFD	10	10	10
Recovery	42.5%	46.0%	50%
Raw Water Flow, MGD	118	109	100
Finished Water Flow, MGD	50	50	50
PUMPING POWER			
Raw Water Pumping TDH, ft H2O	200	200	200
Raw Water Pumping Efficiency	80%	80%	80%
Raw Water Pumping Power, kW-hr	92,460	85,420	78,590
Filtered Water Lift Pumping TDH, ft H2O	105	105	105
Filtered Water Lift Pump Efficiency	80%	80%	80%
Filtered Water Lift Pump Power, kW-hr	48,540	44,850	41,260
RO/PX Booster Pump Specific Power, kW-hr/kgal	7.50	7.61	7.80
RO/PX Booster Pump Power, kW-hr/day	374760	380440	389900
Permeate Lift Pumping TDH, ft H2O	40	40	40
Permeate Lift Pumping Efficiency	80%	80%	80%
Permeate Lift Pumping Power, kW-hr	7,860	7,860	7,860
Finished Water Pumping TDH, ft H2O	200	200	200
Finished Water Pumping Efficiency	80%	80%	80%
Finished Water Pumping Power, kW-hr	39,300	39,300	39,300
Motor Efficiency	95%	95%	95%
Total Treatment Pumps Specific Power kWh/kgal	11.46	11.34	11.31
CHEMICAL CONSUMPTION			
Prechlorination, mg/L	2	2	2
Prechlorination, lbs/day	1960	1820	1670
Dechlorination, mg/L	4.6	4.6	4.6
Dechlorination, lbs/day	4510	4170	3840
Ferric Chloride, mg/L	10	10	10
Ferric Chloride, lbs/day	9800	9060	8330
Filter Aid, mg/L			
Filter Aid, lbs/day	0	0	0
Lime, mg/L	44	44	44
Lime, lbs/day	18320	18320	18320
Carbon Dioxide, mg/L	16	16	16
Carbon Dioxide, lbs/day	6670	6670	6670
Chlorine (Disinfection), mg/L	1.5	1.5	1.5
Chlorine (Disinfection), lbs/day	630	630	630
MISC. UNITS			
Cartridge Filter Loading Rate, gpm/10-inch	4	4	4
Cartridge Filter Length, inches/filter	40	40	40
No. of Cartridge Filters, No.	5200	4800	4400
Cartridge Filter Replacement Frequency, Hours	1000	1000	1000
RO Element Membrane Area, Ft2	400	400	400
RO Elements Per Vessel, No.	7	7	7
No. of Vessels per Train	298	298	298
No. of Trains	6	6	6
No. of Membranes	12500	12500	12500
Membrane Life, Years	5.75	5.25	4.75
Clean in Place Frequency, Times Per Year	6	6	6
Clean in Place Cost, $ per cleaning	$ 15,000	$ 15,000	$ 15,000
Labor, No. of Operators	25	25	25

OPERATIONS COST SUMMARY			
	Scenario 1	**Scenario 2**	**Scenario 3**
Flux, GFD	10	10	10
Recovery	42.5%	46.0%	50%
POWER COSTS			
Raw Water Pumping, $/yr	$ 2,699,832	$ 2,494,264	$ 2,294,828
Filtered Water Pumping, $/yr	$ 1,417,368	$ 1,309,620	$ 1,204,792
RO/PX Booster Pumping, $/yr	$ 10,395,842	$ 10,553,406	$ 10,815,826
Permeate Lift Pumping, $/yr	$ 229,512	$ 229,512	$ 229,512
Finished Water Pumping, $/yr	$ 1,147,560	$ 1,147,560	$ 1,147,560
CHEMICAL COSTS			
Prechlorination, $/yr	$ 815,556	$ 757,302	$ 694,887
Dechlorination, $/yr	$ 469,153	$ 433,784	$ 399,456
Ferric Chloride, $/yr	$ 577,686	$ 534,064	$ 491,033
Filter Aid, $/yr	$ -	$ -	$ -
Lime, $/yr	$ 317,623	$ 317,623	$ 317,623
Carbon Dioxide, $/yr	$ 92,513	$ 92,513	$ 92,513
Chlorine (Disinfection), $/yr	$ 262,143	$ 262,143	$ 262,143
Dewatering Chemicals, $/yr	$ 283,000	$ 261,500	$ 240,000
MISC UNITS			
Media Filter Backwash	$ 52,535	$ 49,900	$ 47,025
Media Filter O&M (Media Loss)	$ 596,125	$ 558,800	$ 521,455
Cartridge Filters, $/yr	$ 865,488	$ 798,912	$ 732,336
Membrane Replacement, $/yr	$ 1,086,957	$ 1,190,476	$ 1,315,789
Clean-in-Place, $/yr	$ 90,000	$ 90,000	$ 90,000
Solids Disposal	$ 1,106,000	$ 1,023,000	$ 940,000
Maintenance, $/yr	3,696,381	3,571,829	3,443,005
Misc Expenses (e.g., Utilities)	$ 584,308	$ 565,842	$ 548,113
Labor, $/yr	$ 1,375,000	$ 1,375,000	$ 1,375,000
TOTAL O&M COST			
$/year	$ 28,160,581	$ 27,617,051	$ 27,202,896
$/kgal	$1.62	$1.59	$1.57

CAPITAL COST SUMMARY		1995	2006
	ENR CCI	5524.15	7629.95
	Scenario 1	**Scenario 2**	**Scenario 3**
Flux, GFD	9	9	9
Recovery	42.5%	46.0%	50%
Intake/Intake Pump Station	$ 7,500,000	$ 7,200,000	$ 6,900,000
Prechlorination System	$ 453,200	$ 428,700	$ 404,100
Dechlorination System	$ 475,000	$ 462,500	$ 450,000
Ferric Chloride System	$ 4,868,900	$ 4,065,200	$ 3,261,500
Filter Aid System	$ -		$ -
Prefiltration	$ 12,093,300	$ 11,278,800	$ 10,464,300
Sand	$ 409,400	$ 378,800	$ 348,100
Anthracite	$ 428,000	$ 396,000	$ 364,000
Garnet	$ 1,290,300	$ 1,193,700	$ 1,097,100
Prefiltration Backwash System	$ 5,604,800	$ 5,265,600	$ 4,926,400
Dewatering Equipment	$ 13,500,000	$ 12,750,000	$ 12,000,000
Filtered Water Lift Station	$ 6,000,000	$ 5,700,000	$ 5,400,000
RO Membranes	$ 6,250,000	$ 6,250,000	$ 6,250,000
RO Skids	$ 14,285,714	$ 14,285,714	$ 14,285,714
RO HP Pumps	$ 2,370,000	$ 2,370,000	$ 2,370,000
PX Booster Pumps	$ 1,200,000	$ 1,200,000	$ 1,200,000
Energy Recovery	$ 5,167,484	$ 4,483,696	$ 3,819,444
Building	$ 22,353,400	$ 22,353,400	$ 22,353,400
Electrical	$ 15,503,304	$ 14,958,817	$ 14,395,651
Instrumentation/Control	12,919,420	12,465,681	11,996,376
Transfer Pump Station	$ 458,300	$ 458,300	$ 458,300
Permeate Flush System	$ 248,700	$ 248,700	$ 248,700
Process Piping	$ 5,524,800	$ 5,524,800	$ 5,524,800
Yard Piping	$ 1,558,900	$ 1,558,900	$ 1,558,900
Cartridge Filters	$ 5,250,000	$ 4,900,000	$ 4,375,000
Clean-in-Place System	$ 200,000	$ 200,000	$ 200,000
Lime System	$ 383,700	$ 383,700	$ 383,700
Carbon Dioxide System	$ 1,122,000	$ 1,122,000	$ 1,122,000
Chlorination System	$ 1,000,000	$ 1,000,000	$ 1,000,000
Ground Storage Tank	$ 3,000,000	$ 3,000,000	$ 3,000,000
High Service Pumping Station	$ 2,400,000	$ 2,400,000	$ 2,400,000
Site Work	$ 3,798,300	$ 3,798,300	$ 3,798,300
Subtotal	$ 157,616,921	$ 152,081,308	$ 146,355,786
Engineering & CM (25%)	$ 39,404,230	$ 38,020,327	$ 36,588,946
Permitting	$ 10,000,000	$ 10,000,000	$ 10,000,000
Contractor Overhead & Profit (10%)	$ 15,761,692	$ 15,208,131	$ 14,635,579
Contingencies (15%)	$ 23,642,538	$ 22,812,196	$ 21,953,368
Total Capital Cost	$ 246,425,382	$ 238,121,962	$ 229,533,678

9 gfd Detailed Costs

Plant Utilization Factor	95%

	Scenario 1	Scenario 2	Scenario 3
Flux, GFD	9	9	9
Recovery	42.5%	46.0%	50%
Raw Water Flow, MGD	118	109	100
Finished Water Flow, MGD	50	50	50
PUMPING POWER			
Raw Water Pumping TDH, ft H2O	200	200	200
Raw Water Pumping Efficiency	80%	80%	80%
Raw Water Pumping Power, kW-hr	92,460	85,420	78,590
Filtered Water Lift Pumping TDH, ft H2O	105	105	105
Filtered Water Lift Pump Efficiency	80%	80%	80%
Filtered Water Lift Pump Power, kW-hr	48,540	44,850	41,260
RO/PX Booster Pump Specific Power, kW-hr/kgal	7.38	7.31	7.50
RO/PX Booster Pump Power, kW-hr/day	369080	365300	374760
Permeate Lift Pumping TDH, ft H2O	40	40	40
Permeate Lift Pumping Efficiency	80%	80%	80%
Permeate Lift Pumping Power, kW-hr	7,860	7,860	7,860
Finished Water Pumping TDH, ft H2O	200	200	200
Finished Water Pumping Efficiency	80%	80%	80%
Finished Water Pumping Power, kW-hr	39,300	39,300	39,300
Motor Efficiency	95%	95%	95%
Total Treatment Pumps Specific Power kWh/kgal	11.34	11.04	11.01
CHEMICAL CONSUMPTION			
Prechlorination, mg/L	2	2	2
Prechlorination, lbs/day	1960	1820	1670
Dechlorination, mg/L	4.6	4.6	4.6
Dechlorination, lbs/day	4510	4170	3840
Ferric Chloride, mg/L	10	10	10
Ferric Chloride, lbs/day	9800	9060	8330
Filter Aid, mg/L			
Filter Aid, lbs/day	0	0	0
Lime, mg/L	44	44	44
Lime, lbs/day	18320	18320	18320
Carbon Dioxide, mg/L	16	16	16
Carbon Dioxide, lbs/day	6670	6670	6670
Chlorine (Disinfection), mg/L	1.5	1.5	1.5
Chlorine (Disinfection), lbs/day	630	630	630
MISC. UNITS			
Cartridge Filter Loading Rate, gpm/10-inch	4	4	4
Cartridge Filter Length, inches/filter	40	40	40
No. of Cartridge Filters, No.	5200	4800	4400
Cartridge Filter Replacement Frequency, Hours	1000	1000	1000
RO Element Membrane Area, Ft2	400	400	400
RO Elements Per Vessel, No.	7	7	7
No. of Vessels per Train	331	331	331
No. of Trains	6	6	6
No. of Membranes	13889	13889	13889
Membrane Life, Years	6	5.5	5
Clean in Place Frequency, Times Per Year	6	6	6
Clean in Place Cost, $ per cleaning	$ 15,000	$ 15,000	$ 15,000
Labor, No. of Operators	25	25	25

OPERATIONS COST SUMMARY

	Scenario 1	Scenario 2	Scenario 3
Flux, GFD	9	9	9
Recovery	42.5%	46.0%	50%
POWER COSTS			
Raw Water Pumping, $/yr	$ 2,699,832	$ 2,494,264	$ 2,294,828
Filtered Water Pumping, $/yr	$ 1,417,368	$ 1,309,620	$ 1,204,792
RO/PX Booster Pumping, $/yr	$ 10,238,279	$ 10,133,422	$ 10,395,842
Permaete Lift Pumping, $/yr	$ 229,512	$ 229,512	$ 229,512
Finished Water Pumping, $/yr	$ 1,147,560	$ 1,147,560	$ 1,147,560
CHEMICAL COSTS			
Prechlorination, $/yr	$ 815,556	$ 757,302	$ 694,887
Dechlorination, $/yr	$ 469,153	$ 433,784	$ 399,456
Ferric Chloride, $/yr	$ 577,686	$ 534,064	$ 491,033
Filter Aid, $/yr	$ -	$ -	$ -
Lime, $/yr	$ 317,623	$ 317,623	$ 317,623
Carbon Dioxide, $/yr	$ 92,513	$ 92,513	$ 92,513
Chlorine (Disinfection), $/yr	$ 262,143	$ 262,143	$ 262,143
Dewatering Chemicals, $/yr	$ 283,000	$ 261,500	$ 240,000
MISC UNITS			
Media Filter Backwash	$ 52,535	$ 49,800	$ 47,025
Media Filter O&M (Media Loss)	$ 596,125	$ 558,800	$ 521,455
Cartridge Filters, $/yr	$ 865,488	$ 798,912	$ 732,336
Membrane Replacement, $/yr	$ 1,157,407	$ 1,262,626	$ 1,388,889
Clean-in-Place, $/yr	$ 90,000	$ 90,000	$ 90,000
Solids Disposal	$ 1,106,000	$ 102,300	$ 940,000
Maintenance, $/yr	3,759,015	3,634,472	3,505,639
Misc Expenses (e.g., Utilities)	$ 590,962	$ 526,542	$ 554,900
Labor, $/yr	$ 1,375,000	$ 1,375,000	$ 1,375,000
TOTAL O&M COST			
$/year	$ 28,142,757	$ 26,371,759	$ 26,925,433
$/kgal	$1.62	$1.52	$1.55

CAPITAL COST SUMMARY

		1995	2006
	ENR CCI	5524.15	7629.95
	Scenario 1	Scenario 2	Scenario 3
Flux, GFD	9	9	9
Recovery	42.5%	46.0%	50%
Intake/Intake Pump Station	$ 7,500,000	$ 7,200,000	$ 6,900,000
Prechlorination System	$ 453,200	$ 429,000	$ 404,100
Dechlorination System	$ 475,000	$ 462,500	$ 450,000
Ferric Chloride System	$ 4,868,900	$ 4,065,200	$ 3,261,500
Filter Aid System	$ -	$ -	$ -
Prefiltration	$ 12,093,300	$ 11,278,800	$ 10,464,300
Sand	$ 409,400	$ 378,800	$ 348,100
Anthracite	$ 428,000	$ 396,000	$ 364,000
Garnet	$ 1,290,300	$ 1,193,700	$ 1,097,100
Prefiltration Backwash System	$ 5,604,800	$ 5,265,600	$ 4,926,400
Dewatering Equipment	$ 13,500,000	$ 12,750,000	$ 12,000,000
Filtered Water Lift Station	$ 6,000,000	$ 5,700,000	$ 5,400,000
RO Membranes	$ 6,944,444	$ 6,944,444	$ 6,944,444
RO Skids	$ 15,873,016	$ 15,873,016	$ 15,873,016
RO HP Pumps	$ 2,370,000	$ 2,370,000	$ 2,370,000
PX Booster Pumps	$ 1,200,000	$ 1,200,000	$ 1,200,000
Energy Recovery	$ 5,167,484	$ 4,483,696	$ 3,819,444
Building	$ 22,353,400	$ 22,353,400	$ 22,353,400
Electrical	$ 15,777,113	$ 15,232,663	$ 14,669,461
Instrumentation/Control	13,147,594	12,693,886	12,224,550
Transfer Pump Station	$ 458,300	$ 458,300	$ 458,300
Permeate Flush System	$ 248,700	$ 248,700	$ 248,700
Process Piping	$ 5,524,800	$ 5,524,800	$ 5,524,800
Yard Piping	$ 1,558,900	$ 1,558,900	$ 1,558,900
Cartridge Filters	$ 5,250,000	$ 4,900,000	$ 4,375,000
Clean-in-Place System	$ 200,000	$ 200,000	$ 200,000
Lime System	$ 383,700	$ 383,700	$ 383,700
Carbon Dioxide System	$ 1,122,000	$ 1,122,000	$ 1,122,000
Chlorination System	$ 1,000,000	$ 1,000,000	$ 1,000,000
Ground Storage Tank	$ 3,000,000	$ 3,000,000	$ 3,000,000
High Service Pumping Station	$ 2,400,000	$ 2,400,000	$ 2,400,000
Site Work	$ 3,798,300	$ 3,798,300	$ 3,798,300
Subtotal	$ 160,400,652	$ 154,865,404	$ 149,139,516
Engineering & CM (25%)	$ 40,100,163	$ 38,716,351	$ 37,284,879
Permitting	$ 10,000,000	$ 10,000,000	$ 10,000,000
Contractor Overhead & Profit (10%)	$ 16,040,065	$ 15,486,540	$ 14,913,952
Contingencies (15%)	$ 24,060,098	$ 23,229,811	$ 22,370,927
Total Capital Cost	$ 250,600,977	$ 242,298,106	$ 233,709,274

7.5 GFD Detailed Costs

Plant Utilization Factor	95%

	Scenario 1	Scenario 2	Scenario 3
Flux, GFD	7.5	7.5	7.5
Recovery	42.5%	46.0%	50%
Raw Water Flow, MGD	118	109	100
Finished Water Flow, MGD	50	50	50
PUMPING POWER			
Raw Water Pumping TDH, ft H2O	200	200	200
Raw Water Pumping Efficiency	80%	80%	80%
Raw Water Pumping Power, kW-hr	92,460	85,420	78,590
Filtered Water Lift Pumping TDH, ft H2O	105	105	105
Filtered Water Lift Pump Efficiency	80%	80%	80%
Filtered Water Lift Pump Power, kW-hr	48,540	44,850	41,260
RO/PX Booster Pump Specific Power, kW-hr/kgal	6.89	7.08	7.27
RO/PX Booster Pump Power, kW-hr/day	344480	353940	363400
Permeate Lift Pumping TDH, ft H2O	40	40	40
Permeate Lift Pumping Efficiency	80%	80%	80%
Permeate Lift Pumping Power, kW-hr	7,860	7,860	7,860
Finished Water Pumping TDH, ft H2O	200	200	200
Finished Water Pumping Efficiency	80%	80%	80%
Finished Water Pumping Power, kW-hr	39,300	39,300	39,300
Motor Efficiency	95%	95%	95%
Total Treatment Pumps Specific Power kWh/kgal	10.85	10.81	10.78
CHEMICAL CONSUMPTION			
Prechlorination, mg/L	2	2	2
Prechlorination, lbs/day	1960	1820	1670
Dechlorination, mg/L	4.6	4.6	4.6
Dechlorination, lbs/day	4510	4170	3840
Ferric Chloride, mg/L	10	10	10
Ferric Chloride, lbs/day	9800	9060	8330
Filter Aid, mg/L			
Filter Aid, lbs/day	0	0	0
Lime, mg/L	44	44	44
Lime, lbs/day	18320	18320	18320
Carbon Dioxide, mg/L	16	16	16
Carbon Dioxide, lbs/day	6670	6670	6670
Chlorine (Disinfection), mg/L	1.5	1.5	1.5
Chlorine (Disinfection), lbs/day	630	630	630
MISC. UNITS			
Cartridge Filter Loading Rate, gpm/10-inch	4	4	4
Cartridge Filter Length, inches/filter	40	40	40
No. of Cartridge Filters, No.	5200	4800	4400
Cartridge Filter Replacement Frequency, Hours	1000	1000	1000
RO Element Membrane Area, Ft2	400	400	400
RO Elements Per Vessel, No.	7	7	7
No. of Vessels per Train	397	397	397
No. of Trains	6	6	6
No. of Membranes	16667	16667	16667
Membrane Life, Years	6.25	5.75	5.25
Clean in Place Frequency, Times Per Year	6	6	6
Clean in Place Cost, $ per cleaning	$ 15,000	$ 15,000	$ 15,000
Labor, No. of Operators	25	25	25

OPERATIONS COST SUMMARY

	Scenario 1	Scenario 2	Scenario 3
Flux, GFD	7.5	7.5	7.5
Recovery	42.5%	46.0%	50%
POWER COSTS			
Raw Water Pumping, $/yr	$ 2,699,832	$ 2,494,264	$ 2,294,828
Filtered Water Pumping, $/yr	$ 1,417,368	$ 1,309,620	$ 1,204,792
RO/PX Booster Pumping, $/yr	$ 9,555,875	$ 9,818,296	$ 10,080,716
Permaete Lift Pumping, $/yr	$ 229,512	$ 229,512	$ 229,512
Finished Water Pumping, $/yr	$ 1,147,560	$ 1,147,560	$ 1,147,560
CHEMICAL COSTS			
Prechlorination, $/yr	$ 815,556	$ 757,302	$ 694,887
Dechlorination, $/yr	$ 469,153	$ 433,784	$ 399,456
Ferric Chloride, $/yr	$ 577,686	$ 534,064	$ 491,033
Filter Aid, $/yr	$ -	$ -	$ -
Lime, $/yr	$ 317,623	$ 317,623	$ 317,623
Carbon Dioxide, $/yr	$ 92,513	$ 92,513	$ 92,513
Chlorine (Disinfection), $/yr	$ 262,143	$ 262,143	$ 262,143
Dewatering Chemicals, $/yr	$ 283,000	$ 261,500	$ 240,000
MISC UNITS			
Media Filter Backwash	$ 52,535	$ 49,800	$ 47,025
Media Filter O&M (Media Loss)	$ 596,125	$ 559,000	$ 521,455
Cartridge Filters, $/yr	$ 865,488	$ 798,912	$ 732,336
Membrane Replacement, $/yr	$ 1,333,333	$ 1,449,275	$ 1,587,302
Clean-in-Place, $/yr	$ 90,000	$ 90,000	$ 90,000
Solids Disposal	$ 1,106,000	$ 1,023,000	$ 940,000
Maintenance, $/yr	3,884,283	3,759,748	3,630,907
Misc Expenses (e.g., Utilities)	$ 606,022	$ 588,183	$ 571,084
Labor, $/yr	$ 1,375,000	$ 1,375,000	$ 1,375,000
TOTAL O&M COST			
$/year	$ 27,776,606	$ 27,351,099	$ 26,950,171
$/kgal	$1.60	$1.58	$1.55

CAPITAL COST SUMMARY

		1995	2006
	ENR CCI	5524.15	7629.95
	Scenario 1	Scenario 2	Scenario 3
Flux, GFD	7.5	7.5	7.5
Recovery	42.5%	46.0%	50%
Intake/Intake Pump Station	$ 7,500,000	$ 7,200,000	$ 6,900,000
Prechlorination System	$ 453,200	$ 429,000	$ 404,100
Dechlorination System	$ 475,000	$ 463,000	$ 450,000
Ferric Chloride System	$ 4,868,900	$ 4,065,000	$ 3,261,500
Filter Aid System	$ -	$ -	$ -
Prefiltration	$ 12,093,300	$ 11,278,800	$ 10,464,300
Sand	$ 409,400	$ 378,800	$ 348,100
Anthracite	$ 428,000	$ 396,000	$ 364,000
Garnet	$ 1,290,300	$ 1,193,700	$ 1,097,100
Prefiltration Backwash System	$ 5,604,800	$ 5,265,600	$ 4,926,400
Dewatering Equipment	$ 13,500,000	$ 12,750,000	$ 12,000,000
Filtered Water Lift Station	$ 6,000,000	$ 5,700,000	$ 5,400,000
RO Membranes	$ 8,333,333	$ 8,333,333	$ 8,333,333
RO Skids	$ 19,047,619	$ 19,047,619	$ 19,047,619
RO HP Pumps	$ 2,370,000	$ 2,370,000	$ 2,370,000
PX Booster Pumps	$ 1,200,000	$ 1,200,000	$ 1,200,000
Energy Recovery	$ 5,167,484	$ 4,483,696	$ 3,819,444
Building	$ 22,353,400	$ 22,353,400	$ 22,353,400
Electrical	$ 16,324,732	$ 15,780,318	$ 15,217,080
Instrumentation/Control	13,603,944	13,150,265	12,680,900
Transfer Pump Station	$ 458,300	$ 458,300	$ 458,300
Permeate Flush System	$ 248,700	$ 248,700	$ 248,700
Process Piping	$ 5,524,800	$ 5,524,800	$ 5,524,800
Yard Piping	$ 1,558,900	$ 1,558,900	$ 1,558,900
Cartridge Filters	$ 5,250,000	$ 4,900,000	$ 4,375,000
Clean-in-Place System	$ 200,000	$ 200,000	$ 200,000
Lime System	$ 383,700	$ 383,700	$ 383,700
Carbon Dioxide System	$ 1,122,000	$ 1,122,000	$ 1,122,000
Chlorination System	$ 1,000,000	$ 1,000,000	$ 1,000,000
Ground Storage Tank	$ 3,000,000	$ 3,000,000	$ 3,000,000
High Service Pumping Station	$ 2,400,000	$ 2,400,000	$ 2,400,000
Site Work	$ 3,798,300	$ 3,798,300	$ 3,798,300
Subtotal	$165,968,112	$160,433,231	$ 154,706,976
Engineering & CM (25%)	$ 41,492,028	$ 40,108,308	$ 38,676,744
Permitting	$ 10,000,000	$ 10,000,000	$ 10,000,000
Contractor Overhead & Profit (10%)	$ 16,596,811	$ 16,043,323	$ 15,470,698
Contingencies (15%)	$ 24,895,217	$ 24,064,985	$ 23,206,046
Total Capital Cost	$258,952,168	$250,649,846	$ 242,060,464

Plant Utilization Factor	95%

	Scenario 1	Scenario 2	Scenario 3
Flux, GFD	6	6	6
Recovery	42.5%	46.0%	50%
Raw Water Flow, MGD	117.6	108.7	100.0
Finished Water Flow, MGD	50	50	50
PUMPING POWER			
Raw Water Pumping TDH, ft H2O	200	200	200
Raw Water Pumping Efficiency	80%	80%	80%
Raw Water Pumping Power, kW-hr	92,460	85,420	78,590
Filtered Water Lift Pumping TDH, ft H2O	105	105	105
Filtered Water Lift Pump Efficiency	80%	80%	80%
Filtered Water Lift Pump Power, kW-hr	48,540	44,850	41,260
RO/PX Booster Pump Specific Power, kW-hr/kgal	6.47	6.70	7.00
RO/PX Booster Pump Power, kW-hr/day	323660	335010	350150
Permeate Lift Pumping TDH, ft H2O	40	40	40
Permeate Lift Pumping Efficiency	80%	80%	80%
Permeate Lift Pumping Power, kW-hr	7,860	7,860	7,860
Finished Water Pumping TDH, ft H2O	200	200	200
Finished Water Pumping Efficiency	80%	80%	80%
Finished Water Pumping Power, kW-hr	39,300	39,300	39,300
Motor Efficiency	95%	95%	95%
Total Treatment Pumps Specific Power kWh/kgal	10.43	10.44	10.52
CHEMICAL CONSUMPTION			
Prechlorination, mg/L	2	2	2
Prechlorination, lbs/day	1960	1820	1670
Dechlorination, mg/L	4.6	4.6	4.6
Dechlorination, lbs/day	4510	4170	3840
Ferric Chloride, mg/L	10	10	10
Ferric Chloride, lbs/day	9800	9060	8330
Filter Aid, mg/L			
Filter Aid, lbs/day	0	0	0
Lime, mg/L	44	44	44
Lime, lbs/day	18320	18320	18320
Carbon Dioxide, mg/L	16	16	16
Carbon Dioxide, lbs/day	6670	6670	6670
Chlorine (Disinfection), mg/L	1.5	1.5	1.5
Chlorine (Disinfection), lbs/day	630	630	630
MISC. UNITS			
Cartridge Filter Loading Rate, gpm/10-inch	4	4	4
Cartridge Filter Length, inches/filter	40	40	40
No. of Cartridge Filters, No.	5200	4800	4400
Cartridge Filter Replacement Frequency, Hours	1000	1000	1000
RO Element Membrane Area, Ft2	400	400	400
RO Elements Per Vessel, No.	7	7	7
No. of Vessels per Train	496	496	496
No. of Trains	6	6	6
No. of Membranes	20833	20833	20833
Membrane Life, Years	6.5	6	5.5
Clean in Place Frequency, Times Per Year	6	6	6
Clean in Place Cost, $ per cleaning	$ 15,000	$ 15,000	$ 15,000
Labor, No. of Operators	25	25	25

OPERATIONS COST SUMMARY

	Scenario 1	Scenario 2	Scenario 3
Flux, GFD	6	6	6
Recovery	42.5%	46.0%	50%
POWER COSTS			
Raw Water Pumping, $/yr	$ 2,699,832	$ 2,494,264	$ 2,294,828
Filtered Water Pumping, $/yr	$ 1,417,368	$ 1,309,620	$ 1,204,792
RO/PX Booster Pumping, $/yr	$ 8,978,328	$ 9,293,177	$ 9,713,161
Permeate Lift Pumping, $/yr	$ 229,512	$ 229,512	$ 229,512
Finished Water Pumping, $/yr	$ 1,147,560	$ 1,147,560	$ 1,147,560
CHEMICAL COSTS			
Prechlorination, $/yr	$ 815,556	$ 757,302	$ 694,887
Dechlorination, $/yr	$ 469,153	$ 433,784	$ 399,456
Ferric Chloride, $/yr	$ 577,686	$ 534,064	$ 491,033
Filter Aid, $/yr	$ -	$ -	$ -
Lime, $/yr	$ 317,623	$ 317,623	$ 317,623
Carbon Dioxide, $/yr	$ 92,513	$ 92,513	$ 92,513
Chlorine (Disinfection), $/yr	$ 262,143	$ 262,143	$ 262,143
Dewatering Chemicals, $/yr	$ 283,000	$ 261,500	$ 240,000
MISC UNITS			
Media Filter Backwash	$ 52,535	$ 49,780	$ 47,025
Media Filter O&M (Media Loss)	$ 596,125	$ 558,790	$ 521,455
Cartridge Filters, $/yr	$ 865,488	$ 798,912	$ 732,336
Membrane Replacement, $/yr	$ 1,602,564	$ 1,736,111	$ 1,893,939
Clean-in-Place, $/yr	$ 90,000	$ 90,000	$ 90,000
Solids Disposal	$ 1,106,000	$ 1,023,000	$ 940,000
Maintenance, $/yr	4,051,622	3,927,060	3,798,246
Misc Expenses (e.g., Utilities)	$ 627,850	$ 610,879	$ 594,783
Labor, $/yr	$ 1,375,000	$ 1,375,000	$ 1,375,000
TOTAL O&M COST			
$/year	$ 27,657,458	$ 27,302,595	$ 27,080,292
$/kgal	$1.60	$1.57	$1.56

CAPITAL COST SUMMARY

		1995	2006
	ENR CCI	5524.15	7629.95
	Scenario 1	Scenario 2	Scenario 3
Flux, GFD	6	6	6
Recovery	42.5%	46.0%	50%
Intake/Intake Pump Station	$ 7,500,000	$ 7,200,000	$ 6,900,000
Prechlorination System	$ 453,200	$ 428,650	$ 404,100
Dechlorination System	$ 475,000	$ 462,500	$ 450,000
Ferric Chloride System	$ 4,868,900	$ 4,065,520	$ 3,261,500
Filter Aid System	$ -	$ -	$ -
Prefiltration	$ 12,093,300	$ 11,278,800	$ 10,464,300
Sand	$ 409,400	$ 378,750	$ 348,100
Anthracite	$ 428,000	$ 396,000	$ 364,000
Garnet	$ 1,290,300	$ 1,193,700	$ 1,097,100
Prefiltration Backwash System	$ 5,604,800	$ 5,265,000	$ 4,926,400
Dewatering Equipment	$ 13,500,000	$ 12,750,000	$ 12,000,000
Filtered Water Lift Station	$ 6,000,000	$ 5,700,000	$ 5,400,000
RO Membranes	$ 10,416,667	$ 10,416,667	$ 10,416,667
RO Skids	$ 23,809,524	$ 23,809,524	$ 23,809,524
RO HP Pumps	$ 2,370,000	$ 2,370,000	$ 2,370,000
PX Booster Pumps	$ 1,200,000	$ 1,200,000	$ 1,200,000
Energy Recovery	$ 5,167,484	$ 4,483,696	$ 3,819,444
Building	$ 22,353,400	$ 22,353,400	$ 22,353,400
Electrical	$ 17,056,269	$ 16,511,737	$ 15,948,616
Instrumentation/Control	14,213,557	13,759,781	13,290,513
Transfer Pump Station	$ 458,300	$ 458,300	$ 458,300
Permeate Flush System	$ 248,700	$ 248,700	$ 248,700
Process Piping	$ 5,524,800	$ 5,524,800	$ 5,524,800
Yard Piping	$ 1,558,900	$ 1,558,900	$ 1,558,900
Cartridge Filters	$ 5,250,000	$ 4,900,000	$ 4,375,000
Clean-in-Place System	$ 200,000	$ 200,000	$ 200,000
Lime System	$ 383,700	$ 383,700	$ 383,700
Carbon Dioxide System	$ 1,122,000	$ 1,122,000	$ 1,122,000
Chlorination System	$ 250,900	$ 250,900	$ 250,900
Ground Storage Tank	$ 3,000,000	$ 3,000,000	$ 3,000,000
High Service Pumping Station	$ 2,400,000	$ 2,400,000	$ 2,400,000
Site Work	$ 3,798,300	$ 3,798,300	$ 3,798,300
Subtotal	$ 173,405,400	$ 167,869,323	$ 162,144,265
Engineering & CM (25%)	$ 43,351,350	$ 41,967,331	$ 40,536,066
Permitting	$ 10,000,000	$ 10,000,000	$ 10,000,000
Contractor Overhead & Profit (10%)	$ 17,340,540	$ 16,786,932	$ 16,214,426
Contingencies (15%)	$ 26,010,810	$ 25,180,399	$ 24,321,640
Total Capital Cost	$ 270,108,101	$ 261,803,985	$ 253,216,397

FIGURE X: Koch TFC 2822HF-400 Specific Power

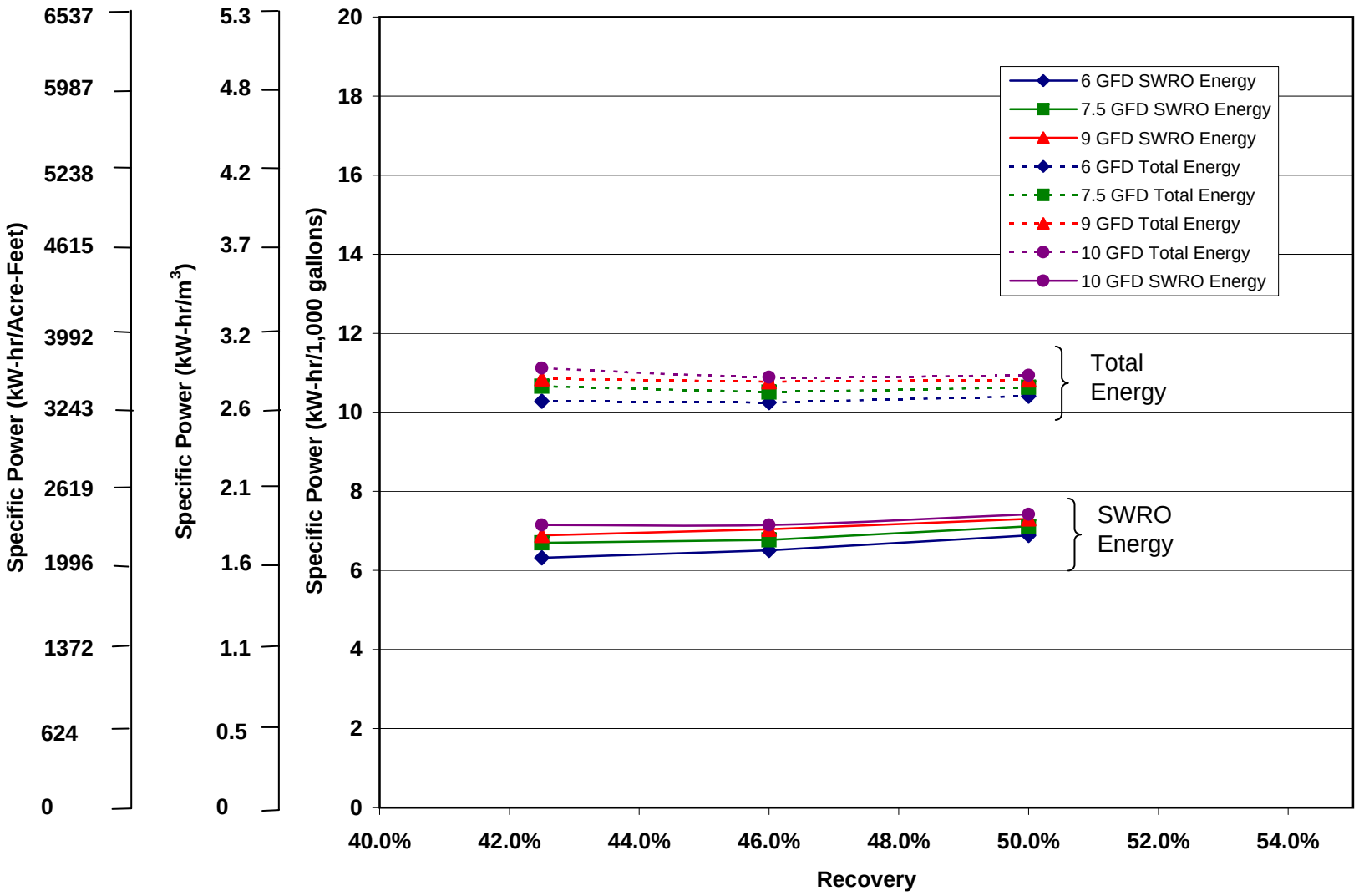

FIGURE X. Estimated Costs for 50-MGD SWRO WTP (Koch TFC 2822HF-400)

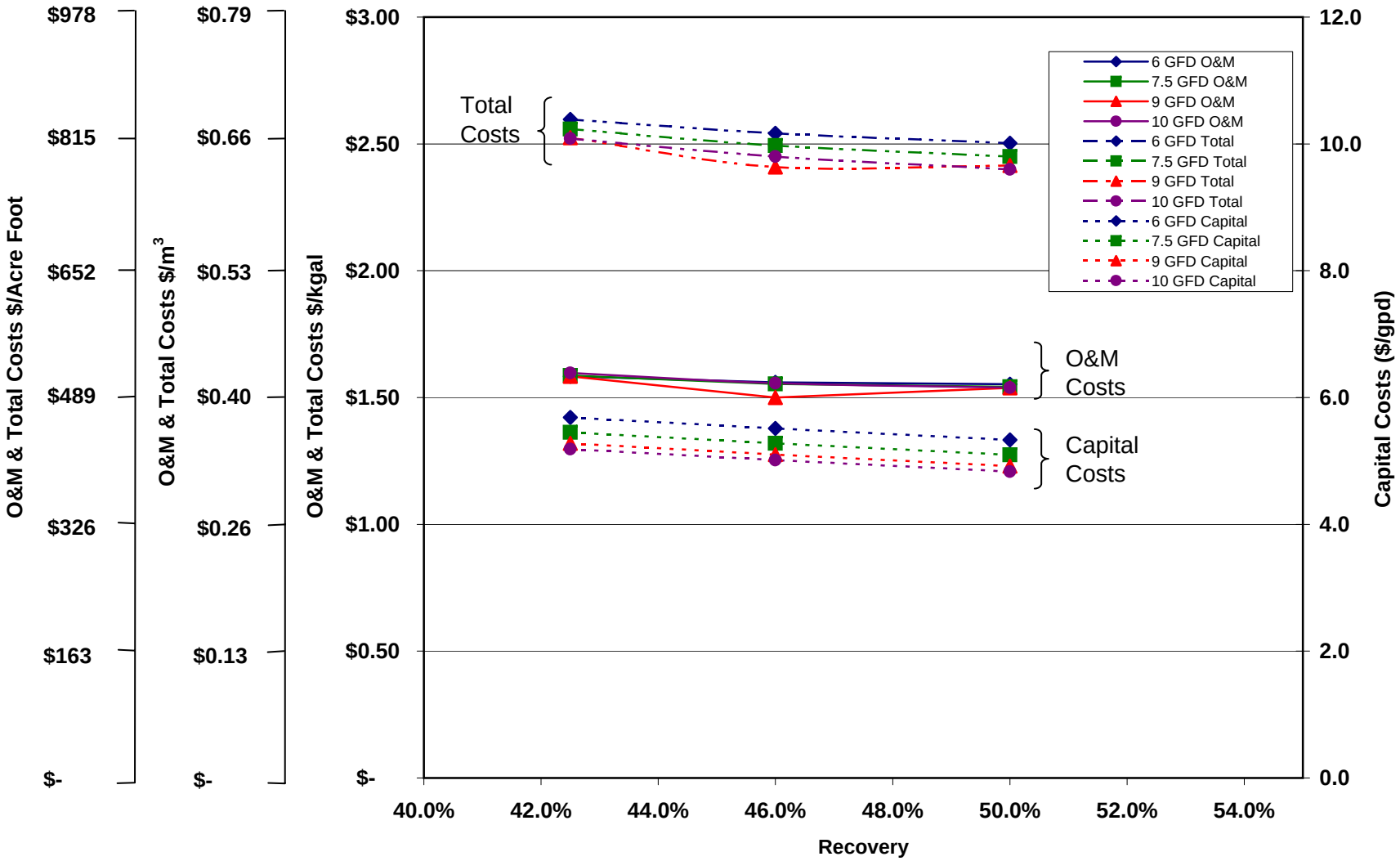

	Capital Cost	O&M Cost	Present Value	Annual Cost
6 GFD, 42.5% Recovery	$ 270,108,101	$ 27,447,466 per year	$ 692,042,923	$ 45,018,385 per year
6 GFD, 46% Recovery	$ 261,803,985	$ 27,040,175 per year	$ 677,477,744	$ 44,070,899 per year
6 GFD, 50% Recovery	$ 253,216,397	$ 26,923,006 per year	$ 667,088,987	$ 43,395,096 per year
7.5 GFD, 42.5% Recovery	$ 258,952,168	$ 27,513,908 per year	$ 681,908,375	$ 44,359,118 per year
7.5 GFD, 46% Recovery	$ 250,649,846	$ 26,931,116 per year	$ 664,647,104	$ 43,236,248 per year
7.5 GFD, 50% Recovery	$ 242,060,464	$ 26,740,179 per year	$ 653,122,561	$ 42,486,560 per year
9 GFD, 42.5% Recovery	$ 250,600,977	$ 27,460,353 per year	$ 672,733,903	$ 43,762,306 per year
9 GFD, 46% Recovery	$ 242,298,106	$ 26,004,204 per year	$ 642,046,464	$ 41,766,044 per year
9 GFD, 50% Recovery	$ 233,709,274	$ 26,663,012 per year	$ 643,585,128	$ 41,866,136 per year
10 GFD, 42.5% Recovery	$ 246,425,382	$ 27,688,169 per year	$ 672,060,397	$ 43,718,493 per year
10 GFD, 46% Recovery	$ 238,121,962	$ 26,987,076 per year	$ 652,979,461	$ 42,477,251 per year
10 GFD, 50% Recovery	$ 229,533,678	$ 26,677,778 per year	$ 639,636,519	$ 41,609,273 per year

Interest	5.0%	
Inflation	3%	
Project Life	30	years

	Capital Cost	O&M Cost	Treatment Cost	
6 GFD, 42.5% Recovery	$ 5.69 per gpd	$ 1.58 per kgal	$ 2.60 per kgal	$ 846 per AF
6 GFD, 46% Recovery	$ 5.51 per gpd	$ 1.56 per kgal	$ 2.54 per kgal	$ 828 per AF
6 GFD, 50% Recovery	$ 5.33 per gpd	$ 1.55 per kgal	$ 2.50 per kgal	$ 816 per AF
7.5 GFD, 42.5% Recovery	$ 5.45 per gpd	$ 1.59 per kgal	$ 2.56 per kgal	$ 834 per AF
7.5 GFD, 46% Recovery	$ 5.28 per gpd	$ 1.55 per kgal	$ 2.49 per kgal	$ 813 per AF
7.5 GFD, 50% Recovery	$ 5.10 per gpd	$ 1.54 per kgal	$ 2.45 per kgal	$ 799 per AF
9 GFD, 42.5% Recovery	$ 5.28 per gpd	$ 1.58 per kgal	$ 2.52 per kgal	$ 822 per AF
9 GFD, 46% Recovery	$ 5.10 per gpd	$ 1.50 per kgal	$ 2.41 per kgal	$ 785 per AF
9 GFD, 50% Recovery	$ 4.92 per gpd	$ 1.54 per kgal	$ 2.41 per kgal	$ 787 per AF
10 GFD, 42.5% Recovery	$ 5.19 per gpd	$ 1.60 per kgal	$ 2.52 per kgal	$ 822 per AF
10 GFD, 46% Recovery	$ 5.01 per gpd	$ 1.56 per kgal	$ 2.45 per kgal	$ 798 per AF
10 GFD, 50% Recovery	$ 4.83 per gpd	$ 1.54 per kgal	$ 2.40 per kgal	$ 782 per AF

Revision Log:

Date	Description
1/25/2006	Added total treatment specifc power to pumping section.
2/3/2006	Added revision log to summary sheet.
2/3/2006	Changed membrane pricing from $700/elem to $475/elem per Lance Johnson's recommendation.
3/22/2006	Changed SW30HRLE-400i membrane pricing to $500 per FilmTec's recommendation.
3/22/2006	Changed membrane life per FilmTec's Cumulitive Annual Replacement Rate Matrix
3/22/2006	Revised membrane replacement cost calculation.
3/22/2006	Corrected membrane element surface area.
3/23/2006	Removed reference to "per train" in cell B49 on the 9 GFD worksheet.
4/5/2006	Increased number of operators from 10 to 25 per recommendation of N. Voutchkov
4/5/2006	Increased the maintainance costs from 0.5% of capital cost to 1.5% of capital cost
4/5/2006	Added $10-million for permitting costs.
4/9/2006	Included capital cost for intake pump station.
4/10/2006	Included capital & O&M Cost for solids handling and disposal.
4/10/2006	Changed unit cost for electricity from $0.12/kW-hr to $0.08/kW-hr based upon recommendations from
4/10/2006	Changed bond payment period from 20 years to 30 years based upon recommendations from SDCWA
4/10/2006	Changed interest rate from 3.5% to 5% based upon recommendations from SDCWA & West Basin
4/25/2006	Added $3-million for FW Storage. Adjusted Intake and Filtered water lift station costs and finished wat
7/17/2007	Added 10gfd, Changed Recovery (delete 35%, added 46%) Adjusted Cartridge Filter Cost.
7/18/2007	Adjusted Carbon Dioxide Dosing Cost
7/19/2007	Corrected all motor efficiencies from 90% to 95% cell b,c,d23

9 gfd Detailed Costs

Plant Utilization Factor	95%

	Scenario 1	Scenario 2	Scenario 3
Flux, GFD	9	9	9
Recovery	42.5%	46.0%	50%
Raw Water Flow, MGD	118	109	100
Finished Water Flow, MGD	50	50	50
PUMPING POWER			
Raw Water Pumping TDH, ft H2O	200	200	200
Raw Water Pumping Efficiency	80%	80%	80%
Raw Water Pumping Power, kW-hr	92,460	85,420	78,590
Filtered Water Lift Pumping TDH, ft H2O	105	105	105
Filtered Water Lift Pump Efficiency	80%	80%	80%
Filtered Water Lift Pump Power, kW-hr	48,540	44,850	41,260
RO/PX Booster Pump Specific Power, kW-hr/kgal	6.89	7.04	7.31
RO/PX Booster Pump Power, kW-hr/day	344480	352050	365300
Permeate Lift Pumping TDH, ft H2O	40	40	40
Permeate Lift Pumping Efficiency	80%	80%	80%
Permeate Lift Pumping Power, kW-hr	7,860	7,860	7,860
Finished Water Pumping TDH, ft H2O	200	200	200
Finished Water Pumping Efficiency	80%	80%	80%
Finished Water Pumping Power, kW-hr	39,300	39,300	39,300
Motor Efficiency	95%	95%	95%
Total Treatment Pumps Specific Power kWh/kgal	10.85	10.78	10.82
CHEMICAL CONSUMPTION			
Prechlorination, mg/L	2	2	2
Prechlorination, lbs/day	1960	1820	1670
Dechlorination, mg/L	4.6	4.6	4.6
Dechlorination, lbs/day	4510	4170	3840
Ferric Chloride, mg/L	10	10	10
Ferric Chloride, lbs/day	9800	9060	8330
Filter Aid, mg/L			
Filter Aid, lbs/day	0	0	0
Lime, mg/L	44	44	44
Lime, lbs/day	18320	18320	18320
Carbon Dioxide, mg/L	16	16	16
Carbon Dioxide, lbs/day	6670	6670	6670
Chlorine (Disinfection), mg/L	1.5	1.5	1.5
Chlorine (Disinfection), lbs/day	630	630	630
MISC. UNITS			
Cartridge Filter Loading Rate, gpm/10-inch	4	4	4
Cartridge Filter Length, inches/filter	40	40	40
No. of Cartridge Filters, No.	5200	4800	4400
Cartridge Filter Replacement Frequency, Hours	1000	1000	1000
RO Element Membrane Area, Ft2	400	400	400
RO Elements Per Vessel, No.	7	7	7
No. of Vessels per Train	331	331	331
No. of Trains	6	6	6
No. of Membranes	13889	13889	13889
Membrane Life, Years	6	5.5	5
Clean in Place Frequency, Times Per Year	6	6	6
Clean in Place Cost, $ per cleaning	$ 15,000	$ 15,000	$ 15,000
Labor, No. of Operators	25	25	25

OPERATIONS COST SUMMARY

	Scenario 1	Scenario 2	Scenario 3
Flux, GFD	9	9	9
Recovery	42.5%	46.0%	50%
POWER COSTS			
Raw Water Pumping, $/yr	$ 2,699,832	$ 2,494,264	$ 2,294,828
Filtered Water Pumping, $/yr	$ 1,417,368	$ 1,309,620	$ 1,204,792
RO/PX Booster Pumping, $/yr	$ 9,555,875	$ 9,765,867	$ 10,133,422
Permaete Lift Pumping, $/yr	$ 229,512	$ 229,512	$ 229,512
Finished Water Pumping, $/yr	$ 1,147,560	$ 1,147,560	$ 1,147,560
CHEMICAL COSTS			
Prechlorination, $/yr	$ 815,556	$ 757,302	$ 694,887
Dechlorination, $/yr	$ 469,153	$ 433,784	$ 399,456
Ferric Chloride, $/yr	$ 577,686	$ 534,064	$ 491,033
Filter Aid, $/yr	$ -	$ -	$ -
Lime, $/yr	$ 317,623	$ 317,623	$ 317,623
Carbon Dioxide, $/yr	$ 92,513	$ 92,513	$ 92,513
Chlorine (Disinfection), $/yr	$ 262,143	$ 262,143	$ 262,143
Dewatering Chemicals, $/yr	$ 283,000	$ 261,500	$ 240,000
MISC UNITS			
Media Filter Backwash	$ 52,535	$ 49,800	$ 47,025
Media Filter O&M (Media Loss)	$ 596,125	$ 558,800	$ 521,455
Cartridge Filters, $/yr	$ 865,488	$ 798,912	$ 732,336
Membrane Replacement, $/yr	$ 1,157,407	$ 1,262,626	$ 1,388,889
Clean-in-Place, $/yr	$ 90,000	$ 90,000	$ 90,000
Solids Disposal	$ 1,106,000	$ 102,300	$ 940,000
Maintenance, $/yr	3,759,015	3,634,472	3,505,639
Misc Expenses (e.g., Utilities)	$ 590,962	$ 526,542	$ 554,900
Labor, $/yr	$ 1,375,000	$ 1,375,000	$ 1,375,000
TOTAL O&M COST			
$/year	$ 27,460,353	$ 26,004,204	$ 26,663,012
$/kgal	$1.58	$1.50	$1.54

CAPITAL COST SUMMARY

		1995	2006
	ENR CCI	5524.15	7629.95
	Scenario 1	Scenario 2	Scenario 3
Flux, GFD	9	9	9
Recovery	42.5%	46.0%	50%
Intake/Intake Pump Station	$ 7,500,000	$ 7,200,000	$ 6,900,000
Prechlorination System	$ 453,200	$ 429,000	$ 404,100
Dechlorination System	$ 475,000	$ 462,500	$ 450,000
Ferric Chloride System	$ 4,868,900	$ 4,065,200	$ 3,261,500
Filter Aid System	$ -	$ -	$ -
Prefiltration	$ 12,093,300	$ 11,278,800	$ 10,464,300
Sand	$ 409,400	$ 378,800	$ 348,100
Anthracite	$ 428,000	$ 396,000	$ 364,000
Garnet	$ 1,290,300	$ 1,193,700	$ 1,097,100
Prefiltration Backwash System	$ 5,604,800	$ 5,265,600	$ 4,926,400
Dewatering Equipment	$ 13,500,000	$ 12,750,000	$ 12,000,000
Filtered Water Lift Station	$ 6,000,000	$ 5,700,000	$ 5,400,000
RO Membranes	$ 6,944,444	$ 6,944,444	$ 6,944,444
RO Skids	$ 15,873,016	$ 15,873,016	$ 15,873,016
RO HP Pumps	$ 2,370,000	$ 2,370,000	$ 2,370,000
PX Booster Pumps	$ 1,200,000	$ 1,200,000	$ 1,200,000
Energy Recovery	$ 5,167,484	$ 4,483,696	$ 3,819,444
Building	$ 22,353,400	$ 22,353,400	$ 22,353,400
Electrical	$ 15,777,113	$ 15,232,663	$ 14,669,461
Instrumentation/Control	13,147,594	12,693,886	12,224,550
Transfer Pump Station	$ 458,300	$ 458,300	$ 458,300
Permeate Flush System	$ 248,700	$ 248,700	$ 248,700
Process Piping	$ 5,524,800	$ 5,524,800	$ 5,524,800
Yard Piping	$ 1,558,900	$ 1,558,900	$ 1,558,900
Cartridge Filters	$ 5,250,000	$ 4,900,000	$ 4,375,000
Clean-in-Place System	$ 200,000	$ 200,000	$ 200,000
Lime System	$ 383,700	$ 383,700	$ 383,700
Carbon Dioxide System	$ 1,122,000	$ 1,122,000	$ 1,122,000
Chlorination System	$ 1,000,000	$ 1,000,000	$ 1,000,000
Ground Storage Tank	$ 3,000,000	$ 3,000,000	$ 3,000,000
High Service Pumping Station	$ 2,400,000	$ 2,400,000	$ 2,400,000
Site Work	$ 3,798,300	$ 3,798,300	$ 3,798,300
Subtotal	$ 160,400,652	$ 154,865,404	$ 149,139,516
Engineering & CM (25%)	$ 40,100,163	$ 38,716,351	$ 37,284,879
Permitting	$ 10,000,000	$ 10,000,000	$ 10,000,000
Contractor Overhead & Profit (10%)	$ 16,040,065	$ 15,486,540	$ 14,913,952
Contingencies (15%)	$ 24,060,098	$ 23,229,811	$ 22,370,927
Total Capital Cost	$ 250,600,977	$ 242,298,106	$ 233,709,274

10 GFD Detailed Costs

Plant Utilization Factor	95%

	Scenario 1	Scenario 2	Scenario 3
Flux, GFD	10	10	10
Recovery	42.5%	46.0%	50%
Raw Water Flow, MGD	118	109	100
Finished Water Flow, MGD	50	50	50
PUMPING POWER			
Raw Water Pumping TDH, ft H2O	200	200	200
Raw Water Pumping Efficiency	80%	80%	80%
Raw Water Pumping Power, kW-hr	92,460	85,420	78,590
Filtered Water Lift Pumping TDH, ft H2O	105	105	105
Filtered Water Lift Pump Efficiency	80%	80%	80%
Filtered Water Lift Pump Power, kW-hr	48,540	44,850	41,260
RO/PX Booster Pump Specific Power, kW-hr/kgal	7.15	7.15	7.42
RO/PX Booster Pump Power, kW-hr/day	357730	357730	370970
Permeate Lift Pumping TDH, ft H2O	40	40	40
Permeate Lift Pumping Efficiency	80%	80%	80%
Permeate Lift Pumping Power, kW-hr	7,860	7,860	7,860
Finished Water Pumping TDH, ft H2O	200	200	200
Finished Water Pumping Efficiency	80%	80%	80%
Finished Water Pumping Power, kW-hr	39,300	39,300	39,300
Motor Efficiency	95%	95%	95%
Total Treatment Pumps Specific Power kWh/kgal	11.12	10.89	10.94
CHEMICAL CONSUMPTION			
Prechlorination, mg/L	2	2	2
Prechlorination, lbs/day	1960	1820	1670
Dechlorination, mg/L	4.6	4.6	4.6
Dechlorination, lbs/day	4510	4170	3840
Ferric Chloride, mg/L	10	10	10
Ferric Chloride, lbs/day	9800	9060	8330
Filter Aid, mg/L			
Filter Aid, lbs/day	0	0	0
Lime, mg/L	44	44	44
Lime, lbs/day	18320	18320	18320
Carbon Dioxide, mg/L	16	16	16
Carbon Dioxide, lbs/day	6670	6670	6670
Chlorine (Disinfection), mg/L	1.5	1.5	1.5
Chlorine (Disinfection), lbs/day	630	630	630
MISC. UNITS			
Cartridge Filter Loading Rate, gpm/10-inch	4	4	4
Cartridge Filter Length, inches/filter	40	40	40
No. of Cartridge Filters, No.	5200	4800	4400
Cartridge Filter Replacement Frequency, Hours	1000	1000	1000
RO Element Membrane Area, Ft2	400	400	400
RO Elements Per Vessel, No.	7	7	7
No. of Vessels per Train	298	298	298
No. of Trains	6	6	6
No. of Membranes	12500	12500	12500
Membrane Life, Years	5.75	5.25	4.75
Clean in Place Frequency, Times Per Year	6	6	6
Clean in Place Cost, $ per cleaning	$ 15,000	$ 15,000	$ 15,000
Labor, No. of Operators	25	25	25

OPERATIONS COST SUMMARY			
	Scenario 1	**Scenario 2**	**Scenario 3**
Flux, GFD	10	10	10
Recovery	42.5%	46.0%	50%
POWER COSTS			
Raw Water Pumping, $/yr	$ 2,699,832	$ 2,494,264	$ 2,294,828
Filtered Water Pumping, $/yr	$ 1,417,368	$ 1,309,620	$ 1,204,792
RO/PX Booster Pumping, $/yr	$ 9,923,430	$ 9,923,430	$ 10,290,708
Permeate Lift Pumping, $/yr	$ 229,512	$ 229,512	$ 229,512
Finished Water Pumping, $/yr	$ 1,147,560	$ 1,147,560	$ 1,147,560
CHEMICAL COSTS			
Prechlorination, $/yr	$ 815,556	$ 757,302	$ 694,887
Dechlorination, $/yr	$ 469,153	$ 433,784	$ 399,456
Ferric Chloride, $/yr	$ 577,686	$ 534,064	$ 491,033
Filter Aid, $/yr	$ -	$ -	$ -
Lime, $/yr	$ 317,623	$ 317,623	$ 317,623
Carbon Dioxide, $/yr	$ 92,513	$ 92,513	$ 92,513
Chlorine (Disinfection), $/yr	$ 262,143	$ 262,143	$ 262,143
Dewatering Chemicals, $/yr	$ 283,000	$ 261,500	$ 240,000
MISC UNITS			
Media Filter Backwash	$ 52,535	$ 49,900	$ 47,025
Media Filter O&M (Media Loss)	$ 596,125	$ 558,800	$ 521,455
Cartridge Filters, $/yr	$ 865,488	$ 798,912	$ 732,336
Membrane Replacement, $/yr	$ 1,086,957	$ 1,190,476	$ 1,315,789
Clean-in-Place, $/yr	$ 90,000	$ 90,000	$ 90,000
Solids Disposal	$ 1,106,000	$ 1,023,000	$ 940,000
Maintenance, $/yr	3,696,381	3,571,829	3,443,005
Misc Expenses (e.g., Utilities)	$ 584,308	$ 565,842	$ 548,113
Labor, $/yr	$ 1,375,000	$ 1,375,000	$ 1,375,000
TOTAL O&M COST			
$/year	$ 27,688,169	$ 26,987,076	$ 26,677,778
$/kgal	$1.60	$1.56	$1.54

CAPITAL COST SUMMARY		1995	2006
	ENR CCI	5524.15	7629.95
	Scenario 1	**Scenario 2**	**Scenario 3**
Flux, GFD	9	9	9
Recovery	42.5%	46.0%	50%
Intake/Intake Pump Station	$ 7,500,000	$ 7,200,000	$ 6,900,000
Prechlorination System	$ 453,200	$ 428,700	$ 404,100
Dechlorination System	$ 475,000	$ 462,500	$ 450,000
Ferric Chloride System	$ 4,868,900	$ 4,065,200	$ 3,261,500
Filter Aid System	$ -		$ -
Prefiltration	$ 12,093,300	$ 11,278,800	$ 10,464,300
Sand	$ 409,400	$ 378,800	$ 348,100
Anthracite	$ 428,000	$ 396,000	$ 364,000
Garnet	$ 1,290,300	$ 1,193,700	$ 1,097,100
Prefiltration Backwash System	$ 5,604,800	$ 5,265,600	$ 4,926,400
Dewatering Equipment	$ 13,500,000	$ 12,750,000	$ 12,000,000
Filtered Water Lift Station	$ 6,000,000	$ 5,700,000	$ 5,400,000
RO Membranes	$ 6,250,000	$ 6,250,000	$ 6,250,000
RO Skids	$ 14,285,714	$ 14,285,714	$ 14,285,714
RO HP Pumps	$ 2,370,000	$ 2,370,000	$ 2,370,000
PX Booster Pumps	$ 1,200,000	$ 1,200,000	$ 1,200,000
Energy Recovery	$ 5,167,484	$ 4,483,696	$ 3,819,444
Building	$ 22,353,400	$ 22,353,400	$ 22,353,400
Electrical	$ 15,503,304	$ 14,958,817	$ 14,395,651
Instrumentation/Control	12,919,420	12,465,681	11,996,376
Transfer Pump Station	$ 458,300	$ 458,300	$ 458,300
Permeate Flush System	$ 248,700	$ 248,700	$ 248,700
Process Piping	$ 5,524,800	$ 5,524,800	$ 5,524,800
Yard Piping	$ 1,558,900	$ 1,558,900	$ 1,558,900
Cartridge Filters	$ 5,250,000	$ 4,900,000	$ 4,375,000
Clean-in-Place System	$ 200,000	$ 200,000	$ 200,000
Lime System	$ 383,700	$ 383,700	$ 383,700
Carbon Dioxide System	$ 1,122,000	$ 1,122,000	$ 1,122,000
Chlorination System	$ 1,000,000	$ 1,000,000	$ 1,000,000
Ground Storage Tank	$ 3,000,000	$ 3,000,000	$ 3,000,000
High Service Pumping Station	$ 2,400,000	$ 2,400,000	$ 2,400,000
Site Work	$ 3,798,300	$ 3,798,300	$ 3,798,300
Subtotal	$ 157,616,921	$ 152,081,308	$ 146,355,786
Engineering & CM (25%)	$ 39,404,230	$ 38,020,327	$ 36,588,946
Permitting	$ 10,000,000	$ 10,000,000	$ 10,000,000
Contractor Overhead & Profit (10%)	$ 15,761,692	$ 15,208,131	$ 14,635,579
Contingencies (15%)	$ 23,642,538	$ 22,812,196	$ 21,953,368
Total Capital Cost	$ 246,425,382	$ 238,121,962	$ 229,533,678

7.5 GFD Detailed Costs

Plant Utilization Factor	95%

	Scenario 1	Scenario 2	Scenario 3
Flux, GFD	7.5	7.5	7.5
Recovery	42.5%	46.0%	50%
Raw Water Flow, MGD	118	109	100
Finished Water Flow, MGD	50	50	50
PUMPING POWER			
Raw Water Pumping TDH, ft H2O	200	200	200
Raw Water Pumping Efficiency	80%	80%	80%
Raw Water Pumping Power, kW-hr	92,460	85,420	78,590
Filtered Water Lift Pumping TDH, ft H2O	105	105	105
Filtered Water Lift Pump Efficiency	80%	80%	80%
Filtered Water Lift Pump Power, kW-hr	48,540	44,850	41,260
RO/PX Booster Pump Specific Power, kW-hr/kgal	6.70	6.78	7.12
RO/PX Booster Pump Power, kW-hr/day	335010	338800	355830
Permeate Lift Pumping TDH, ft H2O	40	40	40
Permeate Lift Pumping Efficiency	80%	80%	80%
Permeate Lift Pumping Power, kW-hr	7,860	7,860	7,860
Finished Water Pumping TDH, ft H2O	200	200	200
Finished Water Pumping Efficiency	80%	80%	80%
Finished Water Pumping Power, kW-hr	39,300	39,300	39,300
Motor Efficiency	95%	95%	95%
Total Treatment Pumps Specific Power kWh/kgal	10.66	10.51	10.63
CHEMICAL CONSUMPTION			
Prechlorination, mg/L	2	2	2
Prechlorination, lbs/day	1960	1820	1670
Dechlorination, mg/L	4.6	4.6	4.6
Dechlorination, lbs/day	4510	4170	3840
Ferric Chloride, mg/L	10	10	10
Ferric Chloride, lbs/day	9800	9060	8330
Filter Aid, mg/L			
Filter Aid, lbs/day	0	0	0
Lime, mg/L	44	44	44
Lime, lbs/day	18320	18320	18320
Carbon Dioxide, mg/L	16	16	16
Carbon Dioxide, lbs/day	6670	6670	6670
Chlorine (Disinfection), mg/L	1.5	1.5	1.5
Chlorine (Disinfection), lbs/day	630	630	630
MISC. UNITS			
Cartridge Filter Loading Rate, gpm/10-inch	4	4	4
Cartridge Filter Length, inches/filter	40	40	40
No. of Cartridge Filters, No.	5200	4800	4400
Cartridge Filter Replacement Frequency, Hours	1000	1000	1000
RO Element Membrane Area, Ft2	400	400	400
RO Elements Per Vessel, No.	7	7	7
No. of Vessels per Train	397	397	397
No. of Trains	6	6	6
No. of Membranes	16667	16667	16667
Membrane Life, Years	6.25	5.75	5.25
Clean in Place Frequency, Times Per Year	6	6	6
Clean in Place Cost, $ per cleaning	$ 15,000	$ 15,000	$ 15,000
Labor, No. of Operators	25	25	25

OPERATIONS COST SUMMARY

	Scenario 1	Scenario 2	Scenario 3
Flux, GFD	7.5	7.5	7.5
Recovery	42.5%	46.0%	50%
POWER COSTS			
Raw Water Pumping, $/yr	$ 2,699,832	$ 2,494,264	$ 2,294,828
Filtered Water Pumping, $/yr	$ 1,417,368	$ 1,309,620	$ 1,204,792
RO/PX Booster Pumping, $/yr	$ 9,293,177	$ 9,398,312	$ 9,870,724
Permaete Lift Pumping, $/yr	$ 229,512	$ 229,512	$ 229,512
Finished Water Pumping, $/yr	$ 1,147,560	$ 1,147,560	$ 1,147,560
CHEMICAL COSTS			
Prechlorination, $/yr	$ 815,556	$ 757,302	$ 694,887
Dechlorination, $/yr	$ 469,153	$ 433,784	$ 399,456
Ferric Chloride, $/yr	$ 577,686	$ 534,064	$ 491,033
Filter Aid, $/yr	$ -	$ -	$ -
Lime, $/yr	$ 317,623	$ 317,623	$ 317,623
Carbon Dioxide, $/yr	$ 92,513	$ 92,513	$ 92,513
Chlorine (Disinfection), $/yr	$ 262,143	$ 262,143	$ 262,143
Dewatering Chemicals, $/yr	$ 283,000	$ 261,500	$ 240,000
MISC UNITS			
Media Filter Backwash	$ 52,535	$ 49,800	$ 47,025
Media Filter O&M (Media Loss)	$ 596,125	$ 559,000	$ 521,455
Cartridge Filters, $/yr	$ 865,488	$ 798,912	$ 732,336
Membrane Replacement, $/yr	$ 1,333,333	$ 1,449,275	$ 1,587,302
Clean-in-Place, $/yr	$ 90,000	$ 90,000	$ 90,000
Solids Disposal	$ 1,106,000	$ 1,023,000	$ 940,000
Maintenance, $/yr	3,884,283	3,759,748	3,630,907
Misc Expenses (e.g., Utilities)	$ 606,022	$ 588,183	$ 571,084
Labor, $/yr	$ 1,375,000	$ 1,375,000	$ 1,375,000
TOTAL O&M COST			
$/year	$ 27,513,908	$ 26,931,116	$ 26,740,179
$/kgal	$1.59	$1.55	$1.54

CAPITAL COST SUMMARY

		1995	2006
	ENR CCI	5524.15	7629.95
	Scenario 1	Scenario 2	Scenario 3
Flux, GFD	7.5	7.5	7.5
Recovery	42.5%	46.0%	50%
Intake/Intake Pump Station	$ 7,500,000	$ 7,200,000	$ 6,900,000
Prechlorination System	$ 453,200	$ 429,000	$ 404,100
Dechlorination System	$ 475,000	$ 463,000	$ 450,000
Ferric Chloride System	$ 4,868,900	$ 4,065,000	$ 3,261,500
Filter Aid System	$ -	$ -	$ -
Prefiltration	$ 12,093,300	$ 11,278,800	$ 10,464,300
Sand	$ 409,400	$ 378,800	$ 348,100
Anthracite	$ 428,000	$ 396,000	$ 364,000
Garnet	$ 1,290,300	$ 1,193,700	$ 1,097,100
Prefiltration Backwash System	$ 5,604,800	$ 5,265,600	$ 4,926,400
Dewatering Equipment	$ 13,500,000	$ 12,750,000	$ 12,000,000
Filtered Water Lift Station	$ 6,000,000	$ 5,700,000	$ 5,400,000
RO Membranes	$ 8,333,333	$ 8,333,333	$ 8,333,333
RO Skids	$ 19,047,619	$ 19,047,619	$ 19,047,619
RO HP Pumps	$ 2,370,000	$ 2,370,000	$ 2,370,000
PX Booster Pumps	$ 1,200,000	$ 1,200,000	$ 1,200,000
Energy Recovery	$ 5,167,484	$ 4,483,696	$ 3,819,444
Building	$ 22,353,400	$ 22,353,400	$ 22,353,400
Electrical	$ 16,324,732	$ 15,780,318	$ 15,217,080
Instrumentation/Control	13,603,944	13,150,265	12,680,900
Transfer Pump Station	$ 458,300	$ 458,300	$ 458,300
Permeate Flush System	$ 248,700	$ 248,700	$ 248,700
Process Piping	$ 5,524,800	$ 5,524,800	$ 5,524,800
Yard Piping	$ 1,558,900	$ 1,558,900	$ 1,558,900
Cartridge Filters	$ 5,250,000	$ 4,900,000	$ 4,375,000
Clean-in-Place System	$ 200,000	$ 200,000	$ 200,000
Lime System	$ 383,700	$ 383,700	$ 383,700
Carbon Dioxide System	$ 1,122,000	$ 1,122,000	$ 1,122,000
Chlorination System	$ 1,000,000	$ 1,000,000	$ 1,000,000
Ground Storage Tank	$ 3,000,000	$ 3,000,000	$ 3,000,000
High Service Pumping Station	$ 2,400,000	$ 2,400,000	$ 2,400,000
Site Work	$ 3,798,300	$ 3,798,300	$ 3,798,300
Subtotal	$165,968,112	$160,433,231	$ 154,706,976
Engineering & CM (25%)	$ 41,492,028	$ 40,108,308	$ 38,676,744
Permitting	$ 10,000,000	$ 10,000,000	$ 10,000,000
Contractor Overhead & Profit (10%)	$ 16,596,811	$ 16,043,323	$ 15,470,698
Contingencies (15%)	$ 24,895,217	$ 24,064,985	$ 23,206,046
Total Capital Cost	$258,952,168	$250,649,846	$ 242,060,464

Plant Utilization Factor	95%

	Scenario 1	Scenario 2	Scenario 3
Flux, GFD	6	6	6
Recovery	42.5%	46.0%	50%
Raw Water Flow, MGD	117.6	108.7	100.0
Finished Water Flow, MGD	50	50	50
PUMPING POWER			
Raw Water Pumping TDH, ft H2O	200	200	200
Raw Water Pumping Efficiency	80%	80%	80%
Raw Water Pumping Power, kW-hr	92,460	85,420	78,590
Filtered Water Lift Pumping TDH, ft H2O	105	105	105
Filtered Water Lift Pump Efficiency	80%	80%	80%
Filtered Water Lift Pump Power, kW-hr	48,540	44,850	41,260
RO/PX Booster Pump Specific Power, kW-hr/kgal	6.32	6.51	6.89
RO/PX Booster Pump Power, kW-hr/day	316090	325550	344480
Permeate Lift Pumping TDH, ft H2O	40	40	40
Permeate Lift Pumping Efficiency	80%	80%	80%
Permeate Lift Pumping Power, kW-hr	7,860	7,860	7,860
Finished Water Pumping TDH, ft H2O	200	200	200
Finished Water Pumping Efficiency	80%	80%	80%
Finished Water Pumping Power, kW-hr	39,300	39,300	39,300
Motor Efficiency	95%	95%	95%
Total Treatment Pumps Specific Power kWh/kgal	10.28	10.25	10.41
CHEMICAL CONSUMPTION			
Prechlorination, mg/L	2	2	2
Prechlorination, lbs/day	1960	1820	1670
Dechlorination, mg/L	4.6	4.6	4.6
Dechlorination, lbs/day	4510	4170	3840
Ferric Chloride, mg/L	10	10	10
Ferric Chloride, lbs/day	9800	9060	8330
Filter Aid, mg/L			
Filter Aid, lbs/day	0	0	0
Lime, mg/L	44	44	44
Lime, lbs/day	18320	18320	18320
Carbon Dioxide, mg/L	16	16	16
Carbon Dioxide, lbs/day	6670	6670	6670
Chlorine (Disinfection), mg/L	1.5	1.5	1.5
Chlorine (Disinfection), lbs/day	630	630	630
MISC. UNITS			
Cartridge Filter Loading Rate, gpm/10-inch	4	4	4
Cartridge Filter Length, inches/filter	40	40	40
No. of Cartridge Filters, No.	5200	4800	4400
Cartridge Filter Replacement Frequency, Hours	1000	1000	1000
RO Element Membrane Area, Ft2	400	400	400
RO Elements Per Vessel, No.	7	7	7
No. of Vessels per Train	496	496	496
No. of Trains	6	6	6
No. of Membranes	20833	20833	20833
Membrane Life, Years	6.5	6	5.5
Clean in Place Frequency, Times Per Year	6	6	6
Clean in Place Cost, $ per cleaning	$ 15,000	$ 15,000	$ 15,000
Labor, No. of Operators	25	25	25

OPERATIONS COST SUMMARY

	Scenario 1	Scenario 2	Scenario 3
Flux, GFD	6	6	6
Recovery	42.5%	46.0%	50%
POWER COSTS			
Raw Water Pumping, $/yr	$ 2,699,832	$ 2,494,264	$ 2,294,828
Filtered Water Pumping, $/yr	$ 1,417,368	$ 1,309,620	$ 1,204,792
RO/PX Booster Pumping, $/yr	$ 8,768,337	$ 9,030,757	$ 9,555,875
Permeate Lift Pumping, $/yr	$ 229,512	$ 229,512	$ 229,512
Finished Water Pumping, $/yr	$ 1,147,560	$ 1,147,560	$ 1,147,560
CHEMICAL COSTS			
Prechlorination, $/yr	$ 815,556	$ 757,302	$ 694,887
Dechlorination, $/yr	$ 469,153	$ 433,784	$ 399,456
Ferric Chloride, $/yr	$ 577,686	$ 534,064	$ 491,033
Filter Aid, $/yr	$ -	$ -	$ -
Lime, $/yr	$ 317,623	$ 317,623	$ 317,623
Carbon Dioxide, $/yr	$ 92,513	$ 92,513	$ 92,513
Chlorine (Disinfection), $/yr	$ 262,143	$ 262,143	$ 262,143
Dewatering Chemicals, $/yr	$ 283,000	$ 261,500	$ 240,000
MISC UNITS			
Media Filter Backwash	$ 52,535	$ 49,780	$ 47,025
Media Filter O&M (Media Loss)	$ 596,125	$ 558,790	$ 521,455
Cartridge Filters, $/yr	$ 865,488	$ 798,912	$ 732,336
Membrane Replacement, $/yr	$ 1,602,564	$ 1,736,111	$ 1,893,939
Clean-in-Place, $/yr	$ 90,000	$ 90,000	$ 90,000
Solids Disposal	$ 1,106,000	$ 1,023,000	$ 940,000
Maintenance, $/yr	4,051,622	3,927,060	3,798,246
Misc Expenses (e.g., Utilities)	$ 627,850	$ 610,879	$ 594,783
Labor, $/yr	$ 1,375,000	$ 1,375,000	$ 1,375,000
TOTAL O&M COST			
$/year	$ 27,447,466	$ 27,040,175	$ 26,923,006
$/kgal	$1.58	$1.56	$1.55

CAPITAL COST SUMMARY

		1995	2006
	ENR CCI	5524.15	7629.95
	Scenario 1	Scenario 2	Scenario 3
Flux, GFD	6	6	6
Recovery	42.5%	46.0%	50%
Intake/Intake Pump Station	$ 7,500,000	$ 7,200,000	$ 6,900,000
Prechlorination System	$ 453,200	$ 428,650	$ 404,100
Dechlorination System	$ 475,000	$ 462,500	$ 450,000
Ferric Chloride System	$ 4,868,900	$ 4,065,520	$ 3,261,500
Filter Aid System	$ -	$ -	$ -
Prefiltration	$ 12,093,300	$ 11,278,800	$ 10,464,300
Sand	$ 409,400	$ 378,750	$ 348,100
Anthracite	$ 428,000	$ 396,000	$ 364,000
Garnet	$ 1,290,300	$ 1,193,700	$ 1,097,100
Prefiltration Backwash System	$ 5,604,800	$ 5,265,000	$ 4,926,400
Dewatering Equipment	$ 13,500,000	$ 12,750,000	$ 12,000,000
Filtered Water Lift Station	$ 6,000,000	$ 5,700,000	$ 5,400,000
RO Membranes	$ 10,416,667	$ 10,416,667	$ 10,416,667
RO Skids	$ 23,809,524	$ 23,809,524	$ 23,809,524
RO HP Pumps	$ 2,370,000	$ 2,370,000	$ 2,370,000
PX Booster Pumps	$ 1,200,000	$ 1,200,000	$ 1,200,000
Energy Recovery	$ 5,167,484	$ 4,483,696	$ 3,819,444
Building	$ 22,353,400	$ 22,353,400	$ 22,353,400
Electrical	$ 17,056,269	$ 16,511,737	$ 15,948,616
Instrumentation/Control	14,213,557	13,759,781	13,290,513
Transfer Pump Station	$ 458,300	$ 458,300	$ 458,300
Permeate Flush System	$ 248,700	$ 248,700	$ 248,700
Process Piping	$ 5,524,800	$ 5,524,800	$ 5,524,800
Yard Piping	$ 1,558,900	$ 1,558,900	$ 1,558,900
Cartridge Filters	$ 5,250,000	$ 4,900,000	$ 4,375,000
Clean-in-Place System	$ 200,000	$ 200,000	$ 200,000
Lime System	$ 383,700	$ 383,700	$ 383,700
Carbon Dioxide System	$ 1,122,000	$ 1,122,000	$ 1,122,000
Chlorination System	$ 250,900	$ 250,900	$ 250,900
Ground Storage Tank	$ 3,000,000	$ 3,000,000	$ 3,000,000
High Service Pumping Station	$ 2,400,000	$ 2,400,000	$ 2,400,000
Site Work	$ 3,798,300	$ 3,798,300	$ 3,798,300
Subtotal	$ 173,405,400	$ 167,869,323	$ 162,144,265
Engineering & CM (25%)	$ 43,351,350	$ 41,967,331	$ 40,536,066
Permitting	$ 10,000,000	$ 10,000,000	$ 10,000,000
Contractor Overhead & Profit (10%)	$ 17,340,540	$ 16,786,932	$ 16,214,426
Contingencies (15%)	$ 26,010,810	$ 25,180,399	$ 24,321,640
Total Capital Cost	$ 270,108,101	$ 261,803,985	$ 253,216,397

Unit Cost Assumptions

Chlorine	$1.20	per pound
Sodium Bisulfite	$0.30	per pound
Ferric Chloride	$0.17	per pound
Filter Aid		per pound
Lime	$0.05	per pound
Carbon Dioxide	$0.04	per pound
Power	$0.08	per kW-hr
Cartridge Filters	$20	each
Membranes	$500	each
Labor	$55,000	per year
RO Vessels	$8,000	each

DESAL08-FC 3.5mm 8/22/07 10:37 AM Page 1

August/September 2007 • Volume 17/No 2

D&WR

The International
Desalination & Water Reuse
Quarterly A Faversham House Group Publication IDA International Desalination Association

MegaMagnum makes reuse debut down under

In this issue...

Preview of IDA World Congress in Maspalomas

PLUS

- DESALINATION & ENVIRONMENT– SPECIAL FEATURE
- NF SOFTENING RAISES TBT AT LAYYAH
- LOW-FOULING NF MEMBRANES IN FLORIDA
- INNOVATIVE DESIGNS FOR ADC II

THE INTERNATIONAL DESALINATION & WATER REUSE QUARTERLY

REPRINT AUGUST/SEPTEMBER 2007 • VOLUME 17/ NO.2

DESAL08-62 63 64 4/9/2007 11:05 am Page 1

Innovation designs to be tested in ADC II

John P. MacHarg, Affordable Desalination Collaboration, USA

The Affordable Desalination Collaboration (ADC) is a non-profit organization comprised of a group of industry leading companies, federal and state government agencies, and water districts, combining their efforts and sharing their expertise in a mission to demonstrate affordable, reliable and environmentally responsible desalination technologies. In addition, the ADC provides a platform by which cutting edge technologies can be tested and measured for their ability to reduce the overall cost of the SWRO treatment process.

In 2006, the ADC developed and tested a high efficiency SWRO system and recorded energy consumption levels between 1.58-2.0 kWh/m^3. The graph below compares results from the ADC I - 2006 demonstration against the energy consumption of other sources of water for Southern California.

Using a net present value model to predict a most affordable operating point from a range of operating data, the ADC demonstrated SWRO energy consumption at around 2.0 kWh/m^3 (7.7 kW-hr/kgal). At that time, this was an approximate 45% reduction over what many experts were predicting was possible for desalination in Southern California.

In addition, we had achieved a world record low energy number for SWRO of 1.58 kWh/m^3 (6.0 kWh/kgal) at viable operating conditions of 43% recovery and 6 gfd.

The challenge that lies before us now is to continue to find innovative technologies and process designs that will help to reduce the energy and cost of desalination even further. One approach ADC II will be testing involves new process designs that may help to increase the achievable recoveries of the current existing technology.

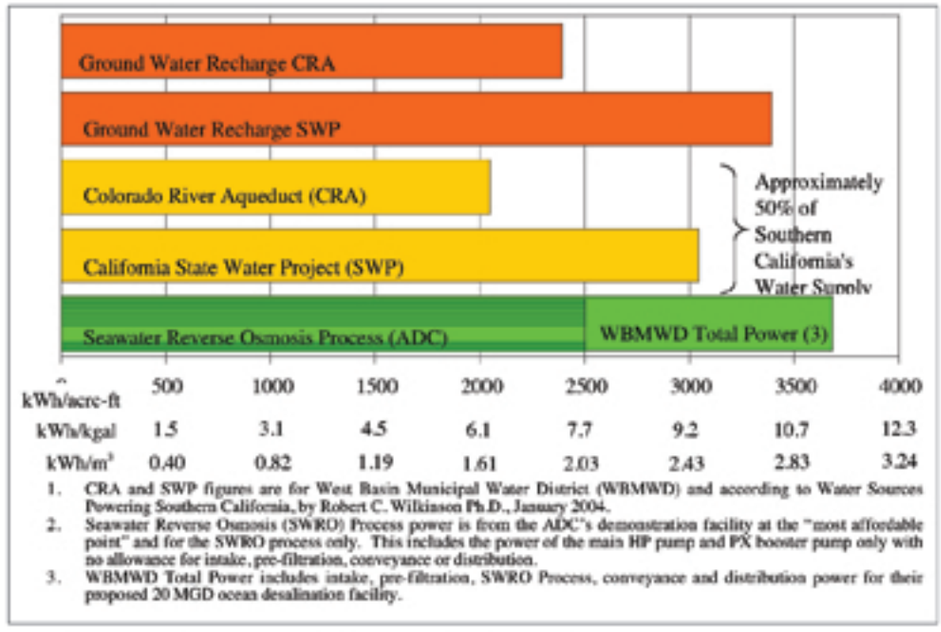

Figure 1. Energy Requirements for Various Water Supplies and the ADC

Innovative Process Design Testing

ADC II will test and demonstrate new process designs that are possible as a result of the isobaric energy recovery technologies. These new process designs will aim to improve the performance of higher recovery seawater and brackish water systems. One example is shown in Figure 2 below where the PX is intentionally unbalanced yielding an overall system recovery (F divided by A) of 54% and 31,900 tds feed water, but the membrane recovery (F divided by E) is at 44% and 38,501 tds feed water.

This data point showed promising results with an overall energy consumption of 8.03 kWh/kgal and permeate quality of 170.3 mg/l TDS. Mechanisms associated with this novel

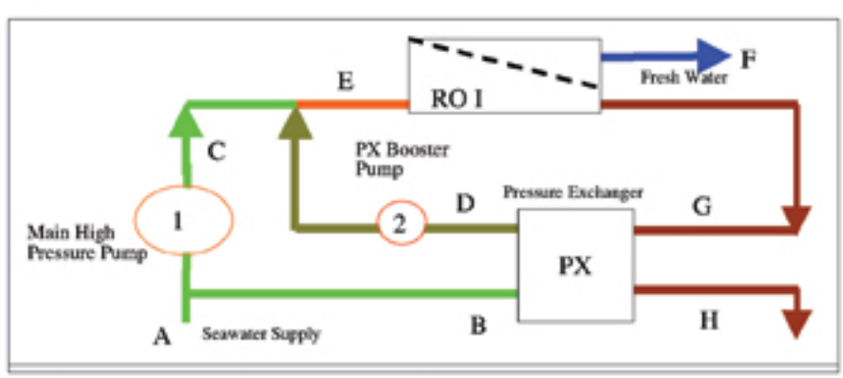

Figure 2 The Unbalanced Pressure Exchanger Diagram.

mode of operation that might lead to improved performance at higher recoveries include:

- Improved boundary layer conditions by maintaining high velocities/flow
- Optimal hydraulic conditions at the "low energy" recovery point
- Balanced membrane flux through increased lead element velocities
- Balanced membrane flux through increased lead element salinity
- Minimum brine flow requirements within manufacturers specifications
- Maximum allowable recoveries within manufacturers specifications

The graph shown in figure 3 shows RO energy consumption, total system energy consumption, water quality and total treatment costs verses the overall system recovery. The four curves showing data between 30-50% system recovery are taken from the ADC I, in which we operated the pilot system at balanced flows.

The four data points taken at 44/54% recovery were generated by operating the pilot system at the data point shown in table 1. The unbalanced data points at 44/54% recovery are consistent with the trends and data taken at balanced PX flows between 35-50% recovery.

		A	B	C	D	E	F	G	H
Flow	gpm	81	36	45	54	99	44	55	37
	gpd	116,899	52,387	64,512	78,307	142,819	63,072	79,747	53,827
	m^3/day	442	198	244	296	541	239	302	204
Pressure	PSI	51	51	902	886	902	2.4	894	47
	bar	3.5	3.5	62.2	61.1	62.2	0.2	61.7	3.2
Quality	mg/l TDS	31,900	31,900	31,900	43,940	38,501	172.3	67,370	67,320
PX-70		QTY	1		Temperature = 58°F				
PX UNIT FLOW		GPM	55		Flux ~ 7.5 gfd				
PX Internal Bypass		GPM	1						
PX Differential HP s		PSI	8						
PX Differential LP s		PSI	4						
PX efficiency		%	97.2						
Membrane Differen		PSI	8						
RO Recovery		%	44%						
System Recovery		%	54%						
HIGH PRESS. PUMP									
Feed Pump eff		%	90%						
Motor eff		%	93%						
VFD eff		%	97%		Total RO Process (kW)			21.1	
Power		kW	20.4						
BOOSTER PUMP					kWh/m3 Permeate			2.12	
Boost Pump Eff		%	60%		kWh/1000 gal Permeate			8.03	
Motor Eff		%	90%		kWh/acre-ft Permeate			2618	
VFD eff		%	97%						
Power		kW	0.7						
Seawater Feed Pump kW			0.0						

Table 1. The Unbalanced Pressure Exchanger 44/54% Recovery Actual Data.

Looking at the treatment and capital costs curves from ADC I we can see that a significant savings may be achieved by pushing the system recoveries higher.

Testing the unbalanced PX effect is straightforward and can be achieved with the ADC Demonstration system in its current configuration. The 44/54% recovery data points presented in Table 1 are from an actual operating point taken at the ADC pilot facility to demonstrate the concept.

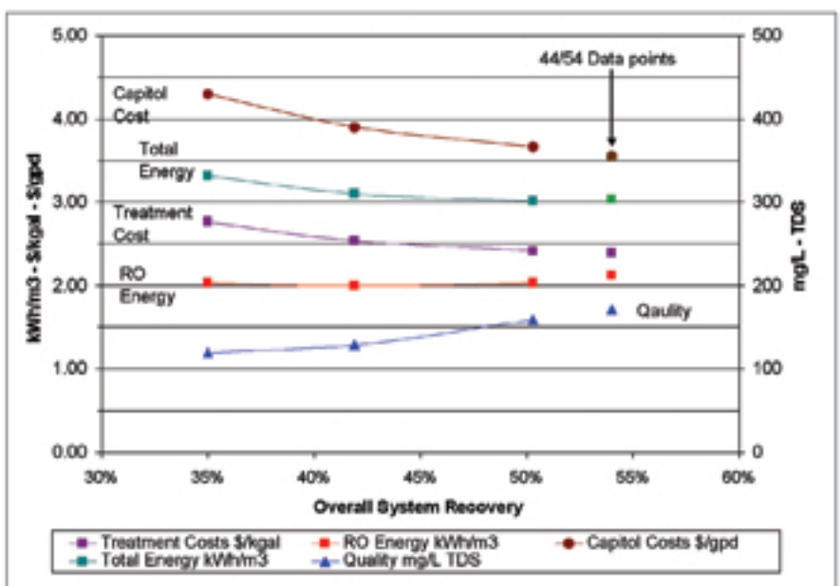

Notes: 1. Curve data from ADC I SW30HRLE-400i membrane set. – 2. RO energy includes HP pump and PX booster. – 3. Total energy includes 200 TDH raw water pumps, 105 TDH filter pumping, 40 TDH permeate pumping, and 200 TDH permeate distribution header. – 4. Treatment and capital costs were generated using net present value model from ADC I.

Figure 3. ADC I Balanced Data Next to 44/54% Recovery Unbalanced Data Point.

Another flow scheme that ADC II will investigate was first conceived in 2002 by ERI's CEO, GG Pique, in line with the brine conversion system (BCS) that Toray membranes had been popularising. The Toray BCS system uses an inter-stage booster pump to boost the brine from a single-stage SWRO system to pressures in excess of 1200 psi (83 bar) and feed a second-stage array that extracts additional permeate and thereby achieves overall system recoveries beyond 50%.

The isobaric booster system (IBS) is a different kind of brine conversion system. Figure 4 and Table 2 below show an example of one operating point. This point was developed using the ROSA 6.0 membrane software with the SW30XLHR-400i membrane.

The modeled results are promising for a 55% recovery system with an overall energy consumption of 2.3 kWh/m^3 (8.6 kWh/kgal) and blended permeate TDS of 144 mg/l. It is also notable that the first stage is projected

to operate at around 719 psi and the second stage is projected to operate at around 1023 psi.

These are markedly lower pressures than those of other types of high recovery schemes such as the BCS. Furthermore, the overall recovery for any 7-element vessel never exceeds 50%, remaining well within the manufacturer's recommendations for minimum brine flows.

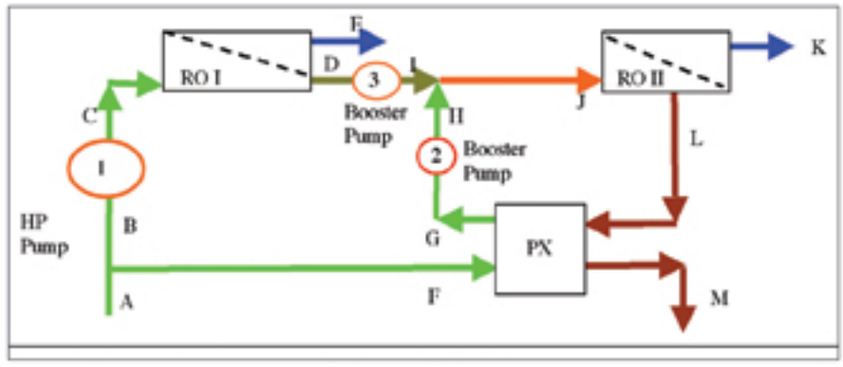

Figure 4 Interstage Booster-Pressure Exchanger Hybrid Diagram

		A	B	C	D	E	F	G	H	I	J	K	L	M	K+E
Flow	gpm	55	31	31	17	14	24	24	24	17	41	17	25	25	31
	gpd	79,600	44,800	44,800	24,640	20,160	34,800	34,800	34,800	24,640	59,440	23,776	35,664	36,240	43,936
	m³/day	301	170	170	93	76	132	132	132	93	225	90	135	137	166
Pressure	psi	30	30	719	702	0	30	987	1023	1023	1023	0	997	20	0
	bar	2.1	2.1	49.6	48.4	0.0	2.1	68.1	70.6	70.6	70.6	0.0	68.8	1.4	0.0
Quality		33,073	33,073	33,073	60,038	120	33,073	35,752	35,752	60,038	45,820	164	74,293	69,464	144

HP PUMP 1			PX-70	QTY	1
Feed Pump efficiency	90%		**PX UNIT FLOW**	GPM	24.8
Motor efficiency	93%		PX Total Internal Bypass	gpm	1.0
Power	kW	11.1	PX Salinity Increase	%	6.5%
			PX Differential HP side	psi	10
PX BOOSTER PUMP 2			PX Differential LP side	psi	10
Boost Pump Efficiency	65%		Membrane Differential I	psi	17
Motor Efficiency	92%		Membrane Differential II	psi	26
Power	kW	0.6	Recovery I	%	45.0%
			Recovery II	%	40.0%
INTERSTAGE BOOSTER PUMP 3			Overall Recovery	%	55.2%
Interstage boost	psi	321			
Boost Pump Efficiency	65%		**Total Power (kW)**		15.8
Motor Efficiency	92%		**kWh/m³ Permeate**		2.28
Power	kW	4.0	**kWh/kgal Permeate**		8.62

Table 2 Interstage Booster-Pressure Exchanger Hybrid Power Model.

Conclusion

The test protocol for both the Unbalanced and IBS schemes will look at a range of recovery and flux rates. Overall system recoveries between 45-60% may be considered.

These new process designs may also help improve the performance and increase the achievable recoveries of brackish water desalination systems. We are working closely with the leading membrane manufacturers to help develop and optimise these new designs and ideas.

Finally, it should be noted that these new process designs can be demonstrated and implemented with "off the shelf" equipment and technologies. In other words, the membranes, pumps, and energy-recovery devices will all be operated within the manufacturers' general recommendations and specifications.

About the Author:
John P. MacHarg is Managing Director-CEO of The Affordable Desalination Collaboration and President of Ocean Pacific Technologies, Inc. Previously he was the General Manager of Energy Recovery Inc. where he was involved in the development, commercialization and marketing of pressure exchanger energy recovery technology for desalination systems.

Optimizing Lower Energy Seawater Desalination, The Affordable Desalination Collaboration

Authors: Stephen Dundorf, John MacHarg, Thomas F. Seacord
Presenter: Stephen Dundorf
Environmental Engineer - Bureau of Reclamation - USA

Abstract

In the United States, the high cost of desalination has historically hindered interest in seawater as a possible fresh water supply. The Affordable Desalination Collaboration (ADC) is a California non-profit organization composed of a group of leading companies and agencies in the desalination industry that have agreed to pool their resources and share their expertise in the mission to realize the affordable desalination of seawater. Using a combination of energy efficient, commercially available reverse osmosis (RO) technologies including pumps, membranes and energy recovery equipment, the ADC has demonstrated that seawater reverse osmosis can be used to produce water at an affordable cost and energy consumption rate comparable to other supply alternatives. The ADC's demonstration scale seawater reverse osmosis (SWRO) treatment system uses pressure exchanger technology (ERI) for energy recovery. The RO array consists of 3 each x 7 element 8" DIA pressure vessel. The flux and recovery can be varied from 6-9 gfd and 35-60% respectively. The overall capacity of the system can be varied from approximately 200-300 m3/day (50,000-80,000 gpd)

The research and demonstration work being conducted by the ADC is divided into two phases. The first phase of testing was completed in March 2006 and took place at the US Navy's Seawater Desalination Test Facility in Port Hueneme, California. It included testing three membrane sets and varying flux and recovery to seek the most affordable operating point. The most affordable operating point was estimated by calculating the net present value for each tested condition, accounting for both capital and operating costs.

The second phase, scheduled to start in spring 2007, includes testing and demonstrating additional manufacturers' membranes through a similar protocol as Phase I, which involved DOW membranes exclusively. Demonstrating additional membranes (DOW, Hydranautics, Toray, Koch), will validate the results from Phase I and show that they can be achieved with several manufacturers' membranes. DOW's "next generation" hybrid-membrane system, involving internally staging membranes of different performance down a single 7-elemenet pressure vessel, will be tested. In Phase II the ADC will also test and demonstrate advanced prefiltration technologies, such as ultrafiltration membranes, which have seen only limited use in seawater desalination. Finally the ADC will develop and test new process designs that are possible as a result of the isobaric energy recovery technologies. As a natural result of pressure exchanger (PX) technology in particular, there are new kinds of flow schemes that may improve the performance of higher recovery seawater and brackish water systems.

I. INTRODUCTION

Increasing demand for allocated freshwater resources, declining freshwater quality, drought, and the need for a diverse water supply portfolio are among the many reasons that people across the United States and the world are looking to the sea as a potential water supply. However, in the United States, the high cost of desalination has historically hindered interest in seawater as a possible fresh water supply. Sensitive to the issue of cost as a limitation to realizing large scale implementation of seawater desalination, engineers, scientists, and the manufacturing industry have worked over the last two decades to reduce both the capital and operating cost associated with desalinated water.

The Affordable Desalination Collaboration (ADC) is a California non-profit organization composed of a group of leading companies and agencies in the desalination industry that have agreed to pool their resources and share their expertise in the mission to realize the affordable desalination of seawater. Using a combination of energy efficient, commercially available RO technologies including pumps, membranes and energy recovery equipment, the ADC has demonstrated that seawater reverse osmosis can be used to produce water at an affordable cost and energy consumption rate comparable to other supply alternatives. The research approach and results are made possible through the collaboration of members that include:

- California Department of Water Resources
- California Energy Commission
- Carollo Engineers
- City of Santa Cruz Water Department
- David Brown Union Pumps – Textron
- Eden Equipment Company, Inc.
- Energy Recovery Inc.
- FilmTec Corporation
- GE Zenon
- Marin Municipal Water District
- Naval Facilities Engineering Service Center
- Pentair - CodeLine Pressure Vessels
- Poseidon Resources
- San Diego County Water Authority
- Sandia National Laboratories
- Toray Membrane USA
- US Bureau of Reclamation
- US Desalination Coalition
- WaterEye
- West Basin Municipal Water District
- Young Engineering & Manufacturing, Inc

The ADC's demonstration scale seawater reverse osmosis (SWRO) treatment system uses pressure exchanger technology (ERI) for energy recovery (**Figure 1.1**). The RO array consists of 3 each x 7 element 8" DIA pressure vessel. The flux and recovery can be varied from 6-9 gfd and 35-60% respectively. The overall capacity of the system can be varied from approximately 200-300 m3/day (50,000-80,000 gpd).

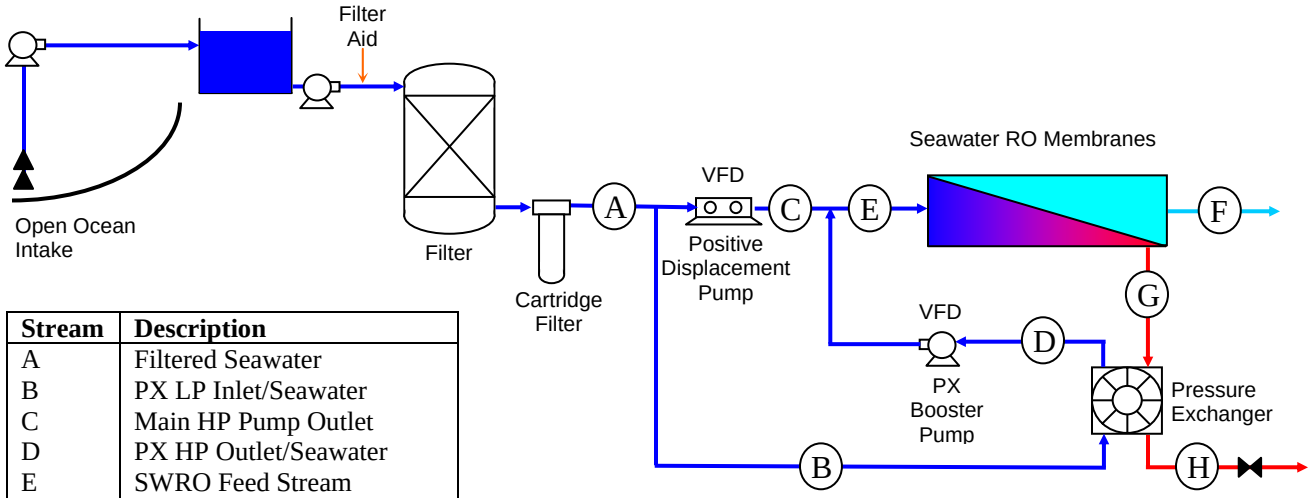

Stream	Description
A	Filtered Seawater
B	PX LP Inlet/Seawater
C	Main HP Pump Outlet
D	PX HP Outlet/Seawater
E	SWRO Feed Stream
F	SWRO Permeate
G	PX HP Inlet/SWRO Brine
H	PX LP Outlet/SWRO Brine

Figure 1.1 Process flow schematic

1.1 Phase I

The first phase of testing was completed in March 2006 and took place at the US Navy's Seawater Desalination Test Facility in Port Hueneme, California. Phase I focused on demonstrating the cost of optimized desalination using a combination of state-of-the-art, commercially available technologies that minimize power consumption and are scalable to 50 MGD. Testing included three membrane sets and varying flux and recovery to seek the most affordable operating point. The most affordable operating point was estimated by calculating the net present value for each tested condition, accounting for both capital and operating costs. Specific power consumption using the ADC's SWRO process design was demonstrated to range from 6.81 to 8.90 kW-hr/kgal (1.80 to 2.00 kW-hr/m3) at the most affordable operating point (i.e., 9 GFD, 50% recovery for the SW30HR-380 and SW30XLE-400i, and 6 GFD, 50% recovery for the SW30HR LE-400i). The lowest SWRO process energy consumption, 5.98 kW-hr/kgal (1.58 kW-hr/m3), was demonstrated using the SW30XLE-400i membrane at 6 GFD, 42.5% recovery.

1.2 Phase II

The second phase, scheduled to start in spring 2007, includes testing and demonstrating additional manufacturers' membranes through a similar protocol as Phase I, which involved DOW membranes exclusively. Demonstrating additional membranes will validate our results from Phase I and show that they can be achieved with several manufacturers' membranes. It will also allow for a direct comparison matrix of performance from four leading membrane manufacturers (DOW, Hydranautics, Toray, Koch). DOW's "next generation" hybrid-membrane will also be tested and demonstrated. Their new concept includes internally staging membranes of different performance down a single 7-elemenet pressure vessel. In Phase II, the ADC will develop and test new process designs that are possible as a result of the isobaric energy recovery technologies. As a natural result of pressure exchanger (PX) technology in particular, there are new kinds of flow schemes that can improve the performance of higher recovery seawater and brackish water systems. In Phase II, these new flow schemes will be used to demonstrate recoveries of seawater systems above 50%, while still maintaining good water quality and low energy consumption. Finally, the ADC will also test and demonstrate advanced prefiltration technologies

throughout the testing, and specifically the Zenon ultrafiltration system. In general, use of membranes for seawater pretreatment is limited and this work will provide valuable information for the U.S. and around the world.

1.3 Cost of Seawater Desalination

Over 95% of the world's water has yet to be tapped as a freshwater supply because it is considered too salty to drink. The need for seawater desalination is apparent, but has historically been limited in use due to its high cost. This high cost is associated with both capital costs and operating costs. However, over the last 15 years, capital costs for seawater desalination have decreased significantly (**Figure 1.2**).

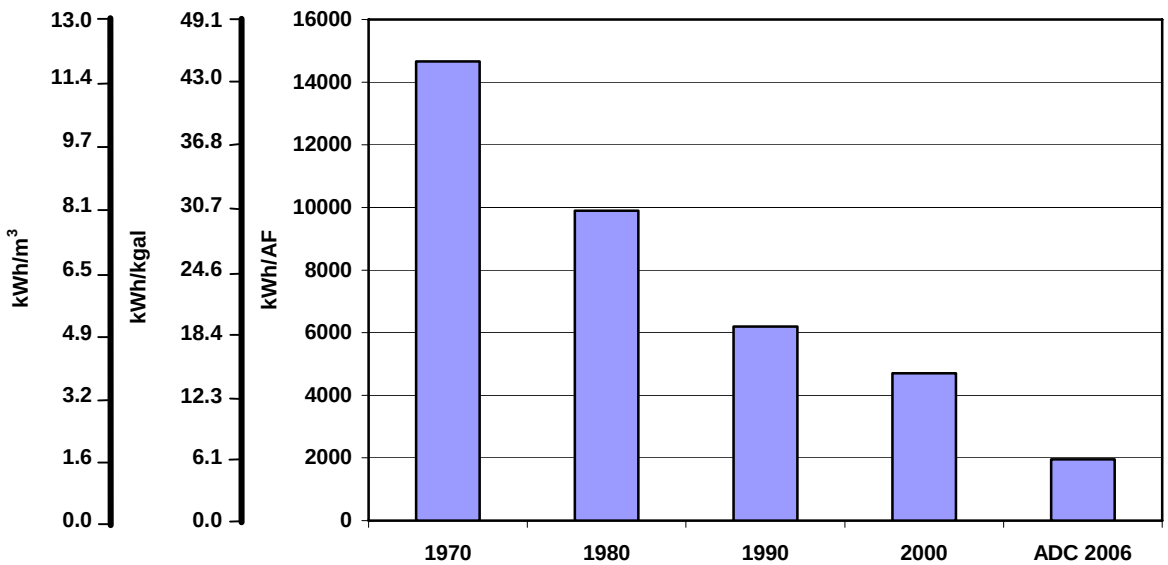

Figure 1.2 History of Power Consumption Required for Seawater Desalination Process Equipment

According to a report by the Bureau of Reclamation, in 1990, the cost for large scale seawater desalination was estimated to be approximately $2,000 per acre foot ($6.14/kgal, $1.62/m^3). However, membrane equipment prices have fallen substantially since 1990 and increased competition in the market has further reduced costs for capital components. Within the last 5 to 10 years, the focus has been on ways to reduce operating costs, particularly energy costs.

Little attention was given to energy consumption when seawater desalination was commercialized in the 1970s. As indicated in **Figure 1.2**, energy consumption for the desalination process was approximately 45 kW-hr/kgal (12 kW-hr/m^3), or 50% of the total costs for a seawater desalination plant. By 2000, the power consumption rate decreased to approximately 14 kW-hr/kgal (3.7 kW-hr/m^3) [4]. This was in large part due to several advances in technology that occurred during the 1990s, which include:

- New low energy reverse osmosis (RO) membranes with improved salt rejection
- High efficiency pumps and motors
- More efficient energy recovery devices (ERDs)

While these advances continue to occur, the industry's perception of seawater desalination energy consumption has not changed significantly since 2000. Many experts in the industry still believe that the seawater desalination process requires between 10 to 14 kW-hr/kgal (2.6 to 3.7 kW-hr/m^3).[5] As indicated in **Figure 1.3**, using these energy requirements, the power required for seawater desalination is

significantly higher than other water supply options in Southern California, which is, in part, why large-scale seawater desalination has not become a reality. However, as presented in **Figures 1.4** and **1.5**, based upon the work conducted during this project, using commercially available technologies applied in a manner where design emphasis is placed on energy efficiency and responsibly reducing the overall total water costs, a new paradigm for the costs of seawater desalination is now available. Seawater desalination can now be considered cost competitive with other new water supply options in Southern California.

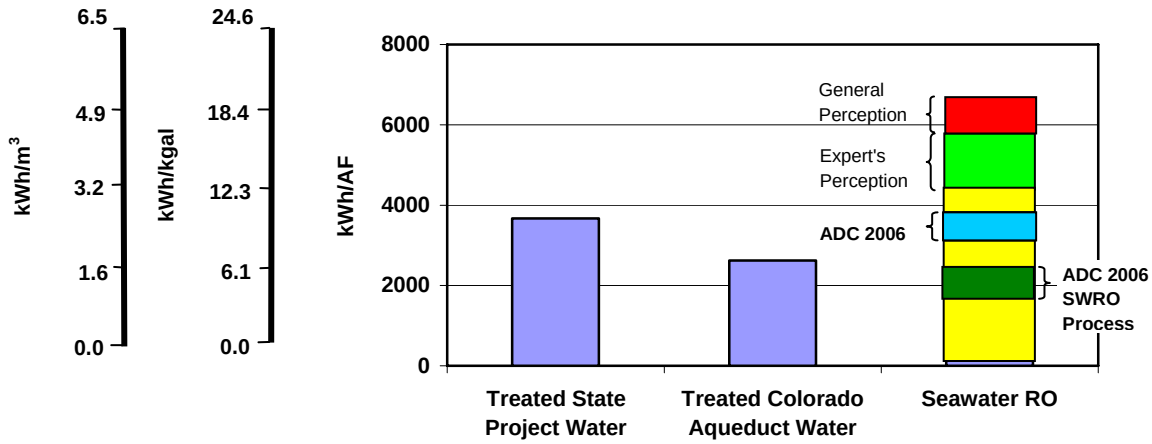

Note: 1. "ADC 2006 SWRO Process" power represents the estimated power required for the SWRO process only. "ADC 2006" denotes the estimated power required for finished water production, which includes the SWRO process.

Figure 1.4 Estimated Power Required for Finished Water Supply Options in Southern California

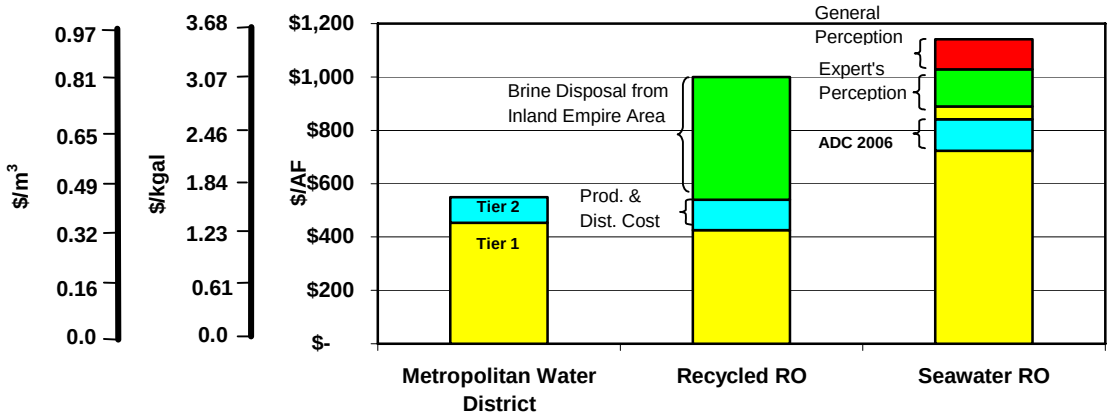

Figure 1.5 Finished Water Cost of 50-MGD Water Supply Options in Southern California

II PHASE I CONCLUSIONS & RECOMMENDATIONS

2.1 Conclusions

- The ADC's results must be taken within the context of the raw water quality conditions tested. These conditions include a lower feed temperature than would typically be seen at a SWRO plant fed warm water from a once through cooling power plant. Therefore, at higher temperature, the membranes, at a flux of 6 gfd will produce water with higher permeate TDS but with about lower

specific energy. Further testing and evaluation is required to determine the impact of temperature.

- Increasing flux (at constant recovery) on the SWRO membranes results in lower concentrations of TDS and boron in the permeate.
- Increasing recovery (at constant flux) results in higher concentrations of TDS and boron in the SWRO permeate.
- Direct contact of brine to SWRO feed water in the PX device resulted in approximately 4 to 6% increase to the SWRO system feed water TDS. This increase in feed water TDS resulted in approximately 30 psig higher feed pressure (i.e, at 50% recovery) to produce the same permeate flow.
- Specific power consumption using the ADC's SWRO process design was demonstrated to range from 6.81 to 8.90 kW-hr/kgal (1.80 to 2.00 kW-hr/m^3) at the most affordable operating point (i.e., 9 GFD, 50% recovery for the SW30HR-380 and SW30XLE-400*i*, and 6 GFD, 50% recovery for the SW30HR LE-400*i*). The lowest SWRO process energy consumption, 5.98 kW-hr/kgal (1.58 kW-hr/m^3), was demonstrated using the SW30XLE-400*i* membrane at 6 GFD, 42.5% recovery.
- The ADC's design has demonstrated the ability to reduce power consumption by 38 to 40% over industry experts' perception of power required for SWRO system designs.[5]
- As train size gets larger, the ADC's power consumption may be difficult to replicate. Careful consideration of pump type, size and energy recovery system "pressure centers" should be considered to minimize power consumption.
- Data indicates that there is an optimal ("most efficient") recovery point with regards to energy consumption for a given membrane array and site conditions.
- Data indicates that flux vs. energy consumption is not linear.
- While high recovery consistently resulted in the lowest treatment costs, the impact of flux rate was questionable in some cases.
- A recovery rate of 50% consistently demonstrated the lowest estimated total water costs.
- Based upon the ADC's cost model, the cost for seawater desalination in California has been shown to be competitive with other new supply options, with costs ranging from $772 to $913/AF ($2.37 to $2.80/kgal, $0.63 to $0.74/$m^3$).

2.1 Recommendations

The data gathered during this study has led to some very promising results. To further validate and improve upon the findings of this study, the authors recommend the following:

- **Temperature**: Additional testing at warmer temperatures is recommended to help draw conclusions with regard to the acceptability of each membrane to meet permeate quality standards and the feed pressure (i.e., energy) required.
- **Pretreatment**: Pretreatment is a critical aspect of a successful seawater RO process. While media filtration is very capable of meeting the SDI and turbidity standards required for RO, the red tide event that occurred early during the study resulted in excessive backwashing frequencies and ultimately placing the study on standby. While the persistence of this event was an apparent anomaly in California, and even those seawater systems treating the Pacific Ocean using membrane pretreatment were challenged to produce enough water, the membrane pretreatment provided a consistent and reliable quality of water, which the ADC's media filter design could not. As a result, the authors recommend a further study to compare other types of media and advanced filtration designs.

- **Public Values**: SWRO system designers should consider public values to issues such as water quality and cost when selecting design conditions such as flux, recovery and membrane type. The community values may require the use of a membrane that rejects more TDS and boron, but requires more energy to produce water. Factors of safety in permeate quality may also be considered. The data presented in this paper indicated that the SW30XLE-400*i* membrane barely met the California standard for boron at a flux of 6 gfd. A higher flux or use of a different membrane may make sense for some communities.
- **Long Term Testing**: The ADC's test results represent conclusions based upon the performance of new membranes. The concept of the Cumulative Annual Replacement Rate (CARR) was used to adjust costs and normalize performance with respect to permeate quality and energy consumption. Long term testing is required to validate the flux and recovery at the most affordable operating point. In addition, long term testing is required to determine how specific power will vary with time and cleaning cycles. Furthermore, industry experience indicates that high flux and high recovery operation results in more frequent chemical cleaning and shorter membrane life. However, when balanced with capital costs on a life cycle basis, incurring these incidental operating costs often proves to be more economical, but more labor intensive to maintain.[14] A longer study is required to help quantify the differences that could not be derived from the ADC's data due to the short testing duration.
- **System Configuration**: Additional configurations for the SWRO system should be tested to compare alternate membrane types, energy recovery devices and pumping technologies. Many manufacturers have comparable technologies that are worthy of testing.
- **Large Diameter Membranes**: Cost estimates should consider the possible economy of large diameter pressure vessels and membrane elements which may reduce capital costs by approximately 20%.[15]
- **Increased Recovery Research**: Seek out, test and demonstrate system designs and technologies that can increase the achievable recoveries of SWRO systems.

III PHASE II STUDY OBJECTIVES AND PROJECT GOALS

The objective of this study is to test a state-of-the-art, energy efficient, demonstration scale SWRO process, designed and built using scalable, commercially available and/or new technologies, in a manner that would provide preliminary information necessary for estimating both capital and operating costs for a 50-MGD seawater desalination plant to supply potable water. This study incorporates recommendations from Phase I along with objectives from a major funding source, the California Department of Water Resources (DWR) Proposition 50. Phase I recommendations being incorporated include:

- Pretreatment
- System configuration
- Increased recovery research

Relevant California DWR Proposition 50 goals include:

- Opportunities for energy efficiency
- Improved membranes with high salt rejection and less susceptible to scaling and fouling
- Strategies for brine/concentrate management
- Better feed water pretreatment processes and strategies

The goal of this work is to:

- Improve seawater desalination treatment technologies in terms of cost, energy use, and environmental considerations
- Use the estimated costs generated as a result of this work to further refine the paradigm for engineers, planners and policy makers related to the costs of seawater desalination.

3.1 MATERIALS AND METHODS

The ADC's SWRO plant is being tested at the U.S. Navy's Desalination Research Center, located in Port Heuneme, California. This facility was chosen based upon the availability of experienced staff who were familiar with the operation of SWRO process equipment and the availability of an existing ocean intake and outfall that could be used with no permitting efforts.

The ADC's demonstration scale system design and testing protocols were developed by Carollo Engineers and reviewed by the ADC's members. The design and testing protocols established the basis for the study, how the equipment is to be tested, how the data is to be interpreted, and the cost estimating procedures. This process helps to ensure that the data and results developed during the study will not be influenced by a desired result. A detailed testing protocol is available on the ADC's website: www.affordabledesalination.com, and is summarized below. Password 1234 needed?

3.2 Equipment

The ADC's demonstration scale SWRO plant is designed to produce between 48,100 to 75,600 gallons per day (182 to 286 m^3/day) of permeate. The configuration will be similar to Phase I presented in **Figure 1.1**. As indicated, the process uses an open intake, pretreatment filter, cartridge filter, high efficiency positive displacement pump, and high efficiency isobaric energy recovery device. The media filter used for pretreatment in Phase I will be replaced with a more advanced filters such as ultrafiltration membranes. The design criteria for these components are presented in **Table 3.1**.

Parameter		Unit	Value
Filter (Media)			
	Loading Rate	gpm/ft^2	3 to 6
	Depth/Grain Size/U.C. of Anthracite	in/mm/-	18 / 0.85-0.95 / <1.4
	Depth/Grain Size/U.C. of Sand	in/mm/-	10 / 0.45-0.55 / <1.4
	Depth/Grain Size/U.C. of Gravel	in/mm/-	6 / 0.3 / <1.4
Filter (Membrane)			
	GE Zenon		
Cartridge Filter			
	Cartridge Specs		#2, 5-micron
	Loading Rate	gpm/10-in.	~1
Membrane System			
	Models		Toray Hydranautics, Koch
	Diameter	inch	8
	Elements per Vessel	No.	7
	Vessels	No.	3
High Pressure Pump [1]			
	Type		Positive Displacement
	TDH	ft (psig)	1385 to 2305 (600 to 1000)
Energy Recovery [2]			
	Type		Pressure Exchanger™ (PX™)
PX Booster Pump [3]			
	Type		Multi-stage Centrifugal

	TDH	ft (psig)	70 to 115 (20 to 50)

Note: Pressure Exchanger™ and PX™ are registered trademarks of Energy Recovery, Inc.
1 David Brown Union, Model TD-60
2 Energy Recovery, Inc., Model PX-70S
3 Energy Recovery, Inc., Model HP-8504

Table 3.1 Equipment design criteria

3.3 Operation and Monitoring

The system will be operated for approximately 18 months with work divided into 3 stages (**Table 3.2**).

		Month																	
Stage	**Description**	**1**	**2**	**3**	**4**	**5**	**6**	**7**	**8**	**9**	**10**	**11**	**12**	**13**	**14**	**15**	**16**	**17**	**18**
1	Low Energy Membranes																		
2	Staged Membranes																		
3	Innovative Flow Regimes																		
All	Advanced Pretreatment																		

Table 3.2 Project timeline

3.3.1 Stage 1: Low Energy Membrane Tes*ting & Demonstration (Hydranautics, Toray, Koch)* This stage will seek to demonstrate new commercially available "low-energy" membrane technology from three additional membrane manufacturing market leaders. Phase I of the ADC tested DOW's "low-energy" SW30XLE-400i and SW30HRLE-400i membranes with excellent results. The three additional new "low-energy" membranes are:

- Hydranautics (SWC5)
- Toray (TM800C)
- Koch (to be determined)

In testing membranes from three additional manufacturers the ADC will add to the Phase I work and validate that overall low energy numbers can be achieved with multiple commercial membrane suppliers. Furthermore, the ADC will be able to provide a comparative matrix of performance, using natural Southern California seawater in a full scale configuration, showing energy consumption, salt rejection, and boron rejection from the four leading membrane manufacturers. If the feed water and operating conditions are not exactly comparable between membrane sets then the data will be normalized and presented in the best possible way to provide an "apples to apples" comparison of performance.

The test protocol will be identical to ADC's Phase I testing. Each set of membranes will be run through an approximate eight week test protocol (**Table 3.3**). The first 2 weeks of testing are required to demonstrate that the performance of the membrane has reached steady state operation before the flux or recovery is modified. Weeks 3 through 5 involve changing the flux and recovery every day to collect data which is used to evaluate the most affordable operating condition. It is recognized that further testing will be required to validate the results of this test due to its short duration. Upon completion of the tests from weeks 3 through 5, the hydraulic, water quality and power data are analyzed and a net present value analysis is conducted to determine which test condition is the most affordable operating

point. The recovery and flux from the most affordable operating point is then run for approximately 2 weeks. The test is concluded with a brief operation at the initial condition (i.e., 7.5 gfd, 42.5% recovery) to collect data that were normalized using the ASTM standard for permeate flow and salt passage, to make certain that the membranes have not fouled.

Parameter	Week 1 to 2	Week 3 to 5									Week 6 to 8
Flux	7.5	6	6	6	7.5	7.5	7.5	9	9	9	TBD[1]
Recovery	42.5%	35%	42.5%	50%	35%	42.5%	50%	35%	42.5%	50%	TBD[1]

1. TBD = After completion of the flux/recovery variation tests during weeks 3 and 4, determined using ADC's cost model to be the "most affordable" condition.

Table 3.3 Test operating conditions

During each testing condition, hydraulic, water quality and power data are collected at periodic intervals. **Table 3.4** presents the type and frequency of manually collected data. Some parameters, such as power consumption, pressures, flows and permeate conductivity, are monitored both manually and automatically using on-line instrumentation. Manually recorded data will be presented in this report. Automatically recorded data will be presented on the ADC's website: www.affordabledesaliantion.com.

	Parameter	Weeks 1-2 and 6-8	Weeks 3-5
Flow	Permeate, Raw Water (PD Pump), Raw Water (into PX), Raw Water (out of PX)	1x per day	2x per day
Pressure	Filter Inlet, Filter Outlet, Cartridge Filter Outlet, PX Booster Pump Suction, PX Brine Outlet, SWRO Feed, SWRO Brine, SWRO Permeate	1x per day	2x per day
Power	PD Pump & PX Booster Pump	1x per day	1x per day
Water Quality	Temperature, Turbidity, SDI	Raw Water: 1x per day	Raw Water: 1x per day
	pH, Conductivity, TDS,	Raw Water: 1x per day RO Feed: 1x per day Permeate: 1x per day	Raw Water: 1x per day RO Feed: 1x per day Permeate: 1x per day
	Boron, Bromide, Iron, Manganese, Aluminum, Calcium, Magnesium, Sodium, Potassium, Bicarbonate, Carbonate, Sulfate, Chloride, Fluoride	Raw Water: 2x per week RO Feed: 2x per week Permeate: 2x per week	Raw Water: 1x every 2 days RO Feed: 1x every 2 days Permeate: 1x every 2 days

Table 3.4 Type and frequency of manual data collection

Water quality parameters sampled daily are analyzed using field kits and those parameters monitored weekly are analyzed using EPA or *Standard Methods.*[6]

3.3.2 Stage 2: Staged Membrane Testing using Dow FilmTec Hybrid Membranes

In addition to demonstrating the new commercially available and proven membrane technology described above, we will test a concept that is being developed by the FilmTec Corporation, which they are calling their hybrid approach. This new concept internally stages membranes of different performance down a single 7 element pressure vessel and seeks to balance the feed water distribution and flux rate from the lead element to the end element. DOW indicates that these new membranes will provide improvements in both energy consumption and water quality over their latest "low energy" membranes that were tested in the ADC Phase I project. This ADC II Proposition 50 proposal will also be applied to the hybrid membrane set.

3.3.3 Stage 3: Innovative Flow Regimes

This stage will involve the development and testing of new process designs that are possible as a result of the isobaric energy recovery technologies. As a natural result of PX technology in particular there are new kinds of flow schemes that may improve the performance of higher recovery seawater and brackish water systems. One example is shown in **Figure 3.1** and **Table 3.5** where the PX is intentionally unbalanced yielding an overall system recovery (F divided by A) of 54% and 31,900 tds feed water, but the membrane recovery (F divided by E) is at 44% and 38,501 tds feed water.

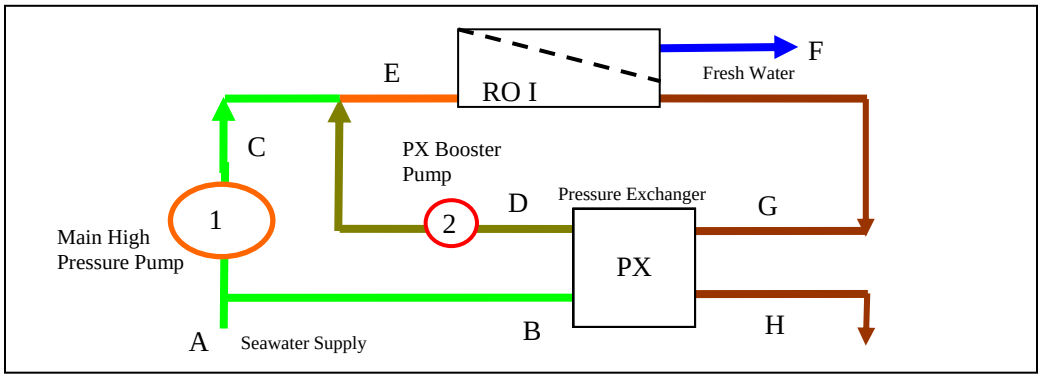

Figure 3.1 Unbalanced pressure exchanger diagram

		A	B	C	D	E	F	G	H
Flow	gpm	81	36	45	54	99	44	55	37
	gpd	116,899	52,387	64,512	78,307	142,819	63,072	79,747	53,827
	m^3/day	442	198	244	296	541	239	302	204
Pressure	psi	51	51	902	886	902	2.4	894	47
	bar	3.5	3.5	62.2	61.1	62.2	0.2	61.7	3.2
Quality	mg/l TDS	31,900	31,900	31,900	43,940	38,501	172.3	67,370	67,320

PX Unit Flow

Flow	55	gpm
PX Internal Bypass	1	gpm
PX Differential HP side	8	psi
PX Differential LP side	4	psi
PX Efficiency	97.2	%
Membrane Differential	8	psi
RO Recovery	44	%
System Recovery	54	%

	High Pressure Pump	**PX Booster Pump**
Feed Pump Efficiency	90%	60%
Motor Efficiency	93%	90%
VFD Efficiency	97%	97%
Power (KW)	20.4	0.7

Table 3.5 Unbalanced pressure exchanger data

This data point taken showed promising results with an overall energy consumption of 8.03 kWh/kgal and permeate quality of 172 mg/l TDS. Mechanisms associated with this novel mode of operation that might lead to improved performance at higher recoveries include:

- Improved boundary layer conditions through increased velocities
- Optimal hydraulic conditions at the "low energy" recovery point
- Balanced membrane flux through increased lead element velocities
- Minimum brine flow requirements within manufacturers specifications
- Maximum allowable recoveries within manufacturers specifications

Figure 3.2 shows RO energy consumption, total system energy consumption, water quality and total treatment costs verses the overall system recovery.

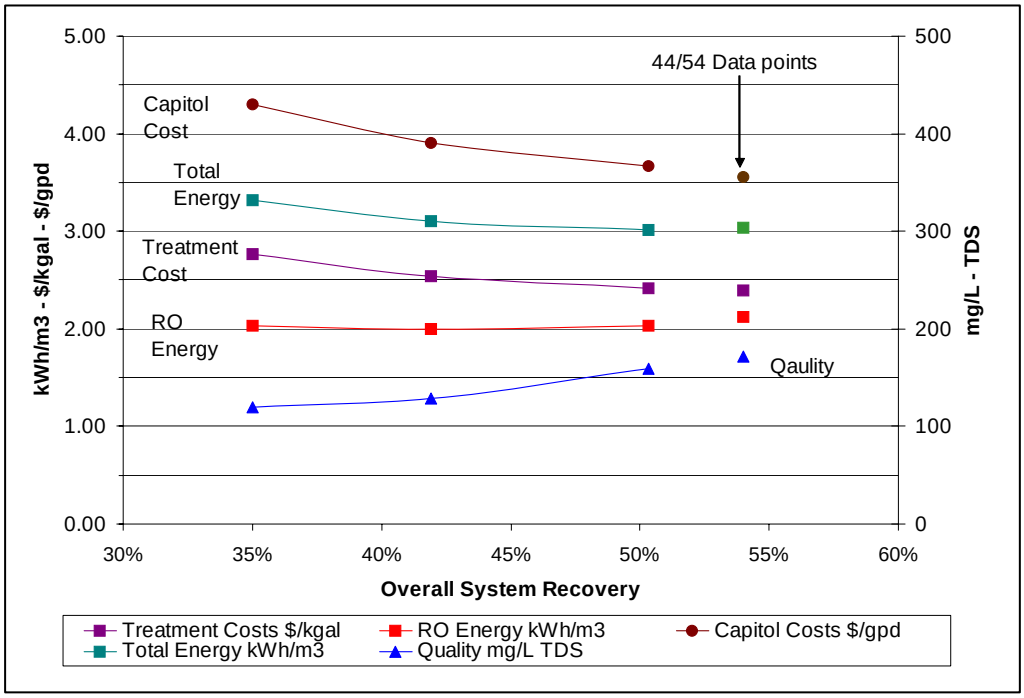

Notes: 1. Curve data from ADC I SW30HRLE-400i membrane set. – 2. RO energy includes HP pump and PX booster. – 3. Total energy includes 200 TDH raw water pumps, 105 TDH filter pumping, 40 TDH permeate pumping, and 200 TDH permeate distribution header. – 4. Treatment and capitol costs were generated using net present value model from ADC I.

Figure 3.2 Phase I balanced data next to 44/54% recovery unbalanced data

The four curves showing data between 30-50% system recovery are taken from the ADC I where we operated the pilot system at balanced flows. The four data points taken at 44/54% recovery were generated by operating the pilot system at the data point shown in **Table 3.5**. The unbalanced data points at 44/54% recovery are consistent with the trends and data taken at balanced PX flows between 30-50% recovery. Looking at the treatment and capitol costs curves from ADC I we can see that a significant savings may be achieved by pushing the system recoveries higher.

Testing the unbalanced PX effect is straight forward and can be achieved with the ADC demonstration system in its current configuration. The 44/54% recovery data points presented in **Table 3.5** are from an actual operating point taken at the ADC pilot facility to demonstrate the concept.

Another flow scheme that the ADC plans to test incorporates an interstage booster approach in combination with a different pressure exchanger design (**Figure 3.3**). This Interstage Booster-Pressure Exchanger Hybrid design can also be used to push system recoveries beyond 50%.

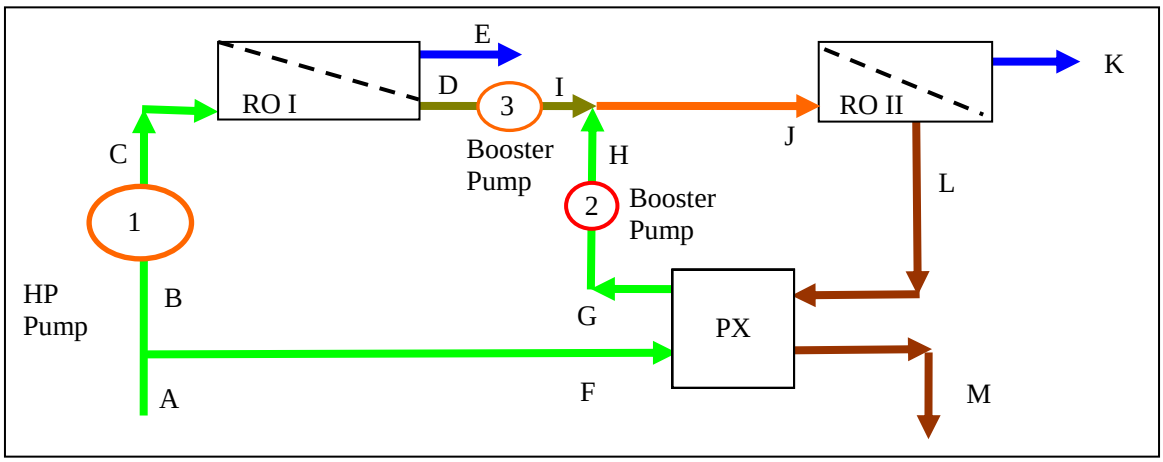

Figure 3.3 Interstage Booster-Pressure Exchanger Hybrid diagram

Table 3.6 shows an example of one operating point. This point was developed using the ROSA 6.0 membrane software with the SW30XLHR-400i membrane. See section N for actual membrane projections. The modeled results are promising for a 55% recovery system with an overall energy consumption of 8.62 kWh/kgal and blended permeate TDS of 144 mg/l. It is also notable that the first stage is projected to operate at around 719 psi and the second stage is projected to operate at around 1023 psi. These are markedly lower pressures than other types of high recovery schemes such as the brine conversion system (BCS), which typically reach pressures in excess of 1200 psi. Furthermore, the overall recovery for any 7-element vessel never exceeds 50% remaining well within the manufacturer's recommendations for minimum brine flows.

To test the interstage hybrid approach the ADC will need to make significant modifications to the current system that include the addition of an interstage booster pump and reconfiguration of the current 3ea, 7-element parallel vessel array into a single 7-element vessel feeding a second single 7-element vessel in series. The test protocol for both the Unbalanced and Hybrid flow schemes may look at a range of recovery and flux rates. Overall system recoveries between 45-65% may be considered.

		A	B	C	D	E	F	G
Flow	gpm	55	31	31	17	14	24	24
	gpd	79,600	44,800	44,800	24,640	20,160	34,800	34,800
	m^3/day	301	170	170	93	76	132	132
Pressure	psi	30	30	719	702	0	30	987
	bar	2.1	2.1	49.6	48.4	0.0	2.1	68.1
Quality	mg/l TDS	33,073	33,073	33,073	60,038	120	33,073	35,752

		H	I	J	K	L	M	K+E
Flow	gpm	24	17	41	17	25	25	31
	gpd	34,800	24,640	59,440	23,776	35,664	6,240	43,936
	m^3/day	132	93	225	90	135	137	166
Pressure	psi	1023	1023	1023	0	997	20	0
	bar	70.6	70.6	70.6	0.0	68.8	1.4	0.0
Quality	mg/l TDS	35,752	60,038	45,820	164	74,293	69,464	144

PX Unit Flow

Flow	24.8	gpm
PX Internal Bypass	1.0	gpm
PX Differential HP side	10	psi
PX Differential LP side	10	psi
PX efficiency	97.2	%
Membrane Differential I	17	psi
Membrane Differential I	26	psi
RO Recovery I	45	%
RO Recovery II	40	%
System Recovery	55.2	%

	High Pressure Pump	PX Booster Pump	Interstage Booster Pump
Feed Pump Efficiency	90%	65%	65%
Motor Efficiency	93%	92%	92%
VFD Efficiency	97%	97%	97%
Power (KW)	11.1	0.6	4.0

Table 3.6 Interstage booster-pressure exchanger hybrid data

These new process designs may also help improve the performance and increase the achievable recoveries of brackish water desalination systems throughout California and across the United States. The ADC plans on working closely with leading membrane manufacturers to help develop and optimize these new designs and ideas. Before testing, the ADC envisions holding a collaborative workshop to discuss and advance these ideas and plans to include at least one technical expert from each of the participating membrane manufacturers.

Finally, it should be noted that these new process designs can be demonstrated and implemented with "off the shelf" equipment and technologies. In other words, the membranes, pumps, and energy recovery devices will all be operated within the manufacturers' general recommendations and specifications.

3.3.4 Advanced Pretreatment

Advanced filtration system(s) will be used throughout the project. Initially, the ADC will test a Zenon Environmental/GE ZeeWeed® 1000 membrane pilot system. ZeeWeed® based water treatment is a low energy immersed membrane process that consists of outside-in, hollow-fiber modules immersed directly in the feed-water. The small pore size of the membranes ensures that no particulate matter, including Cryptosporidium oocysts, Giardia cysts, suspended solids or other contaminants of concern, will pass into the treated water stream.

The ZeeWeed® 1000 immersed membrane system can easily remove particles that are greater than 0.1 microns in size without any pretreatment. Furthermore, if dissolved components can be first converted to insoluble species, the membrane will subsequently remove them as well. For example, the size of natural organic matter present in surface waters is generally smaller than the membrane pore size. Similarly, iron and manganese can also exist in dissolved forms that can pass through the membrane. However, the ZeeWeed® 1000 process is compatible with upstream pretreatment such as enhanced coagulation and oxidation, which can convert contaminants from dissolved to suspended forms that are unable to pass through the membrane. These features and advantages will help the ADC and other full scale seawater desalination systems operate more reliably through the California summer water conditions that include green algae blooms and red tide events.

Although Zenon's advance pre-filtration system is being added to the ADC study primarily to improve our reliability through summer operation we will also be adding the following objectives to our work:

- Determine optimal design parameters for the Zenon system that will generate stable ZeeWeed® membrane performance.
- Demonstrate that the ZeeWeed® Membrane Pre-treatment System will produce high quality effluent and meet applicable standards.
- Develop effective cleaning regimes, including type of chemicals and minimum time between cleanings.

Although advanced pretreatment systems such as membranes have had limited application in natural seawater systems, they show great promise for improving the reliability and affordability of seawater desalination plants. This is an excellent opportunity to help the ADC both operate more reliably and move the state of the art forward.

3.4 Cost Estimating Procedures

A present value analysis model, which accounts for both capital and operating costs, is developed and used to establish the most affordable operating condition. The present value analysis model is operated at the completion of the flux/recovery variation tests, presented previously in **Table 3.2**, to establish the condition that will be operated for the remaining two weeks. Only those conditions that demonstrate the ability to meet water quality standards for TDS and boron during the flux/recovery variation tests are considered for the most affordable operating condition. As discussed previously, the conditions for the present value analysis model were established as part of the testing protocol. These conditions are presented in **Table 3.7**.

As noted in **Table 3.8,** capital costs are determined under the assumption that the SWRO facilities would be co-located with a power plant. Therefore, capital costs developed do not include any new intake or outfall facilities. Pretreatment was considered similar to the demonstration scale test equipment, however, media filters were estimated in accordance with the deep bed filter concepts use for the Point Lisas SWRO facility in Trinidad (i.e., 4 gpm/ft^2, 5-ft anthracite, 2.5-ft sand, 2-ft garnet).[7] Such a design is assumed to be more compatible with challenging raw water qualities (i.e., than the ADC's demonstration scale media filters), such as those associated with red tide events.

Project Size	50 MGD	**Intake/High Service Pump Motor Eff.**	90%
Capital Cost [1]	Determined with WTCOST Model and Manufacturer Quotes	**RO Process Energy Demand**	Study data[2]
		RO Membrane Life	Refer to **Table 4.5**
Electrical Systems	12% of Capital Cost	**RO Membrane Element Cost**[3]	$475 to $600

Instrumentation & Control	10% of Capital Cost	**RO Pressure Vessel** [4]	$8000
Project Life	30 years	**Sodium Hypochlorite Dose (pretreatment)**	2 mg/L
Bond Payment Period	30 years	**Sodium Hypochlorite Cost**	$1.2/lb.
Interest	5%	**Sodium Bisulfite Dose**	4.6 mg/L
Construction Contingencies	15% of capital cost	**Sodium Bisulfite Cost**	$0.3/lb.
Contractor OH&P	10% of capital cost	**Cartridge Filter Loading Rate**	3 gpm/10-in.
Engineering & Const. Mgmt.	25% of capital cost	**Cartridge Filter Cost**	$5/10-in.
Permitting Cost	$10-million	**Cartridge Filter Life**	1000 hours
Annual Maintenance Costs	1.5% of capital cost	**Carbon Dioxide Dose**	16 mg/L
Labor	25 operators @ $55,000/yr ea.	**Carbon Dioxide Cost**	$0.04/lb
Power Costs	$0.08 per kW-hr	**Lime Dose**	44 mg/L
Intake Pump TDH	200 ft H_2O	**Lime Cost**	$0.05/lb.
High Service Pump TDH	200 ft H_2O	**Sodium Hypochlorite Dose (finished water)**	1.5 mg/L
Intake/High Service Pump Eff.	75%		

Note: O&M does not include administrative, laboratory, legal, reporting or management fees since these costs vary widely.

1 Includes intake pump station, prechlorination/dechlorination systems, ferric chloride systems, media filtration, media filter backwash system, filtered water lift station, cartridge filters, SWRO equipment, RO bldg., permeate flush system, clean-in-place system, transfer pump station, process piping, yard piping, lime system, carbon dioxide system, chlorination system, high service pump station, site work.

2 Power meter readings

3 SW30HR-380 = $475/ea.; SW30XLE-400*i* = $600/ea.; SW30HR LE-400*i* = $500/element.

4 Installed, includes all ancillary piping, frames and fittings.

Table 3.7 Present value analysis conditions

	Flux					
	6 GFD		**7.5 GFD**		**9 GFD**	
Recovery	**CARR**[1]	**Membrane Life**	**CARR**[1]	**Membrane Life**	**CARR**[1]	**Membrane Life**
35%	7%	6.5 yrs	8%	6.25 yrs	9%	6 yrs
42.5%	9%	6 yrs	10%	5.75 yrs	11%	5.5 yrs
50%	11%	5.5 yrs	12%	5.25 yrs	13%	5 yrs

1 Cumulative Annual Replacement Rate (CARR). The percentage of membrane elements that would be replaced to maintain a performance requirement (i.e., permeate quality and energy) for a 5 year warranty.

Table 3.8 RO Membrane life and annual replacement rate

3.5 Quality Assurance and Quality Control

The ADC's quality assurance program consists of the following elements:

- Review of the testing protocol by all ADC members to establish testing procedures and cost estimating methods before conducting any of the work. This is done to ensure that the data does not influence the tests results or conclusions.
- Hydraulic data recorded both manually and automatically to compare and resolve discrepancies.
- Power data is recorded by two separate power meters. Data is compared to resolve discrepancies and provide assurance that data is accurate.
- Water quality data analyzed according to EPA or *Standard Methods* procedures, including quality control.

- Final reporting prepared by a licensed professional engineer with an ethical duty to act in the public's interest.
- Peer review of present value model and final reporting. Peer reviewers are independent, third parties such as utility/agency members of the ADC and/or their consultants.

4.0 RESULTS AND DISCUSSION

4.1 Raw Water Quality

Typical seawater quality tested during Phase I is summarized in **Table 4.1**. As noted, the SWRO average feed water temperature was 15.2 ^{o}C, which is cooler than the water that would typically be fed to an SWRO water treatment plant from a once through cooling system. The ADC's data should therefore be taken in the context of this information.

Parameter	Average	Parameter	Average	Parameter	Average
Temperature	15.2 ^{o}C	Calcium	395 mg/L	Bicarbonate	135 mg/L
Total Dissolved Solids	31,688	Magnesium	1,230 mg/L	Chloride	19,345 mg/L
Conductivity	49,524 mhos	Sodium	10,370 mg/L	Sulfate	2,090 mg/L
pH	8.0	Potassium	340 mg/L	Fluoride	< 25 mg/L
Turbidity	1.8 NTU	Barium	0.21 mg/L	Bromide	< 125 mg/L
Boron	4.82 mg/L	Strontium	7.2 mg/L	Silica	6.85 mg/L
		Aluminum	0.21 mg/L		

Table 4.1 Average seawater quality

4.2 SWRO System Performance (To be completed)

Results from Phase II testing will begin during testing that should start in May 2007.

- *Permeate Water Quality*
- *Energy Efficiency*
- *Specific Power*
- *Estimated Costs*

5.0 ACKNOWLEDGEMENTS

The authors would like to acknowledge the members of the ADC for their material, technical and financial support in completing this work.

6.0 REFERENCES

1. United Nations Environment Programme. 2003. *World Water Development Report.*
2. Shirley Skeel. 2003. Is It Time for Desalination? A Piece of the Answer - Maybe. *California Coast & Ocean*. 19:3 (31-36).
3. D'Aquino, R. 2003. A Wake-up Call in Water Management. *Chemical Engineering Progress*. 99:3 (10-14).
4. Moch, I. And C. Harris. What Seawater Energy Recovery Systems Should I Use? - A Modern Comparative Study". Proc. 2002 IDA World Congress. Bahrain, March 2002.
5. Alspach. B and I. Watson. Sea Change. *Civil Engineering*. Vol. 74, No. 2, February 2004.
6. L.S. Clesceri, A.E. Greenburg, and A.D. Eaton. 1998. Standard Methods for the Examination of Water and Wastewater, 20th Edition. APHA, AWWA, WEF.

7. Trussell, R.R., J. Jacangelo and R. Cass. 2004. Design and Performance of the Pretreatment for the Point Lisas Desalter. Proc. 2004 AWWA Annual Conference. Orlando, FL.
8. Voutchkov, N. 2006. Application of Ultrafiltration/Microfiltration as Pretreatment for Seawater Desalination. Proc. NWRI Microfiltration IV Conference, City of Orange, CA.
9. Irwin. K.J. and J.D. Thompson. 2003. Point Lisas SWRO Plant Trinidad - First Year Success. The International Desalination & Water Reuse Quarterly. 13:3 (12-16).
10. Liberman, B. 2004. The Importance of Energy Recovery Devices in Reverse Osmosis Desalination, from *The Future of Desalination in Texas*, Volume 2. Texas Water Development Board. Austin, Texas.
11. Moch, I. 2000. The Case and Feasibility for High Recovery Seawater RO Systems. International Desalination and Water Reuse Quarterly. 10:3 (44-51).
12. MacHarg, J. 2001. Exchanger Tests Verify 2.0 kWhr/m3 SWRO Energy Use. International Desalination and Water Reuse Quarterly. 11:1.
13. Prato, T., E. Schoepke, L. Etchinson, T. O'Brien, B. Hernon, K. Perry, and M. Peterson. 2000. Production of High Purity Water from Seawater. Proc. 20000 North American Biennial Conference of the American Desalting Association. South Lake Tahoe, Nevada.
14. Chellam, S., C.A. Serra, M.R. Wiesner. 1998. Estimating Costs for Integrated Membrane Systems. J.AWWA. 90:11 (96-104).
15. Bartels, C., R. Bergman, M. Hallan, L. Henthorne, P. Knappe, J. Lozier, P. Metcalfe, M. Peery, and I. Shelby. 2005. Membrane Consortium Analysis of Large RO/NF Element Diameters. Proc. 2005 AWWA Membrane Technology Conference. Phoenix, AZ.

Quarterly Technical Progress Report
Covering Period October 1, 2007 to December 31, 2007
Date of Report 1-24-08

Agreement Number:	4600007440
DWR ID Number:	n/a
Project Title:	Optimizing Seawater Reverse Osmosis for Affordable Desalination
Recipient Organization:	Affordable Desalination Collaboration 2419 E. Harbor Blvd, #173 Ventura, CA 93001
Partners:	See attached membership list.
Contact Person:	John MacHarg 2419 E. Harbor Blvd, #173 Ventura, CA 93001 Tel: 650-283-7976 Fax: 805-658-8060 e-mail: jmacharg@affordabledesal.com
Date Submitted:	1-24-08

_____
Signed, Reviewed by designated representative

1. **Project Objective:** The objectives of the Affordable Desalination Collaboration (ADC) are to demonstrate affordable, reliable and environmentally responsible reverse osmosis desalination technologies and to provide a platform by which cutting edge technologies can be tested and measured for their ability to reduce the overall cost of the seawater reverse osmosis (SWRO) treatment process.

2. **Project Description / Background:** A key challenge facing the seawater desalination industry today is to develop a new generation of reverse osmosis (RO) plants that deliver high-quality, fresh water at a reduced economic and environmental cost. The key to achieving these goals is to address the most expensive and environmentally taxing component of operating a desalination system: energy.

   The ADC was formed in 2004 to fund and execute the first part of a multiple phase Affordable Desalination Demonstration Project. The ADC members are a group of leading government agencies, municipalities, RO manufacturers,

consultants and professionals partnering together to help reduce the costs associated with desalination.
The first phase of the project, ADC I, built and operated a demonstration plant at the United States Navy's Seawater Desalination Test Facility in Pt. Hueneme, California. The plant utilized a combination of proven technologies developed primarily in the U.S. and California to demonstrate that seawater desalination can be optimized to make it technically and economically viable. ADC I achieved remarkable results by desalinating seawater at energy levels between 6.0-6.9 kWh/kgal (1960-2250 kWh/acre-ft). On average, these numbers make the power for desalination comparable to the power required for the State Water and the Colorado River Aqueduct projects and they are approximately 35% lower than experts had been projecting for seawater desalination. For the approximate 100 mgd of proposed seawater desalination projects in Southern California alone, this 35% savings equates to approximately 140,000 Mega Watt hours in energy savings per year.

This second phase (ADC II) will pursue the following demonstration, and development programs.

a. Test and demonstrate additional manufacturers' membranes through a protocol similar to Phase I.
b. Test and demonstrate DOW FILMTEC's next generation "hybrid-membrane".
c. Develop and demonstrate new process designs that are possible as a result of the isobaric energy recovery technologies. We will use the ADC pilot system to test and demonstrate these new flow schemes in order to push the recoveries above 50%, while still maintaining good water quality and low energy performance.
d. Test and demonstrate Zenon ultra-filtration technology ahead of our ADC pilot system. This portion of the test should build on and compliment the other pre-filtration studies that are taking place in the region.

Thus far we have completed the first two sets of manufacturers' membrane testing that includes the Toray membrane test (Task 2) and the Koch membrane test (Task 3). In addition we have also completed a portion of the Hydranautics membrane test (Task 4).

- Start Date of Contract: April 2, 2007
- End Date of Contract: December 22, 2008

3. Progress and Status:

The forth quarter of 2007 was been mostly spent proceeding through the test protocol with a few minor diversions and/or delays. We completed the Koch Low Energy Membrane Task 3 test on 11-21-07. We then changed over to the Hydranautics Membranes Task 4 test and began the test protocol for the Hydranautics set on

11/28/07. We had completed the ripening period of the test protocol by December 14th. Around that same time the unit experienced a failure in the programmable logic controller (PLC) which rendered the equipment inoperable. The equipment has since been repaired and the test protocol was re-started on January 4th.

The Hydranautic membranes are performing very well. They are producing relatively good water quality while simultaneously operating at relatively low operating pressures/energy consumption. The other membranes we have test thus far have either produced better quality water at higher energy consumption or not quite as good water quality at lower pressure/energy consumption. From our preliminary results it appears that the Hydranuautics membranes have been able to combine relatively good water quality with relatively low energy consumption performance characteristics. The complete data set for ADC II results is attached.

A table comparing the most affordable points between FILMTEC (tested in ADC I) Toray, and Koch is provided below. This table has not changed from the Q3 report since the NPV point has not been determined as yet for the Hydranautics membranes.

Manufacturer's Comparison of the Most Affordable Points (PRELIMINARY)

Mfgr	Rec %	Flux gfd	RO Process kWh/m3 (kWh/kgal)	TDS mg/l	Boron mg/l	Total Treatment Costs $/kgal (3)	Temp ºF	Feed ktds
FILMTEC (1) SW30HR-380	50.0	9.0	2.23 (8.43	107	0.57	$ 796	64	32.02
FILMTEC (1) SW30XLE-400i	50.0	9.0	1.91 (7.22)	210	1.04	$ 772	56	32.01
FILMTEC (1) SW30HRLE-400i	48.0	6.0	1.87 (7.07)	188	0.95	$ 810	57	32.06
Toray TM800C (2)	49.7	9.0	1.98 (7.48)	185	0.79	$ 792	65	32.39
Koch TFC 2822HF-400 (2)	45.8	9.0	1.86 (7.03)	273	TBD	$ 785	62	32.01

Notes: 1. Data from ADC I test where FILMTEC membranes were used exclusively. 2. Preliminary results. 3. Cost of water from various manufactures is from various NPV model revisions and will need to be reconciled to a final NPV model upon completion of project. Therefore the above Total Treatment Costs are not exactly "apples to apples" comparisons.

The Zenon advanced filtration system is now scheduled for delivery in late January/early February 2008. Since they are very near completion of the package we hope that this delivery schedule will be accurate. In order to achieve 1 years operation experience and data collection with the Zenon system we will need to run the test through at least February-09. This would impact our overall schedule, but since we are running significantly under budget it would not impact the overall budget. Currently, we are operating with the original media filtration and producing good quality RO feed water at less than 5 SDI.

4. **Percent Complete of Total Project:** ~25%

5. **Deliverables:**

Trade Show/Conference/Publication	Date(s)	Author(s)	Presenter	DWR Submittal
IDA World Conference, Gran Canaria, ADC II Update	October 21-26, 2007	Stephen Dundorf, Thomas F. Seacord, John MacHarg	Stephen Dundorf	Q3-07
Desalination and Water Reuse (DWR) Quarterly, Innovative Designs to be Tested in ADC II	Aug/Sept-07	John P. MacHarg	n/a	Q3-07
AMTA 2007 Annual Conference, Las Vegas, ADC I 10 mgd Application	July 23-27, 2007	Bradley Sessions, Tom Seacord, P.E.	Tom Seacord	Q2-07
AWWA Membrane Technology Conference, Tampa Florida, Collier County results	March 18-21, 2007	Brandon Yallaly, P.E., Tom Seacord, P.E., Steve Messner	Brandon Yallaly	Q2-07

In addition to the above papers and presentations, the ADC is planning to hold a joint workshop with the American Membrane Technology Association (AMTA) at the joint AMTA-SEDA Conference, July 14, 2008 in Naples, Florida. The primary purpose of this workshop will be to present the results from our membrane testing (ADC I plus Tasks 2-5).

6. Expenditures

	Budgetary Category (I)	Balances September 30 2007 Non State Share (II)	State Share (Grant) (III)	Total Project Costs (IV) = (II+III)	Q 4 Expenditures Non State Share (II)	State Share (Grant) (III)	Total Project Costs (IV) = (II+III)	Balances December 31, 2007 Non State Share (II)	State Share (Grant) (III)	Total Project Costs (IV) = (II+III)
(a)	Administration									
	Salaries, wages	$ -	$ 173,613	$ 173,613		$ 28,500	$ 28,500	$ -	$ 145,113	$ 145,113
	Fringe benefits	$ -	$ 40,563	$ 40,563		$ 9,783	$ 9,783	$ -	$ 30,780	$ 30,780
	Supplies	$ -	$ 39,850	$ 39,850		$ 719	$ 719	$ -	$ 39,131	$ 39,131
	Equipment	$ -	$ 6,000	$ 6,000			$ -	$ -	$ 6,000	$ 6,000
	Consulting services	$ 22,500	$ 47,000	$ 69,500			$ -	$ 22,500	$ 47,000	$ 69,500
	Travel	$ -	$ 13,735	$ 13,735			$ -	$ -	$ 13,735	$ 13,735
(b)	Planning/design/engineering	$ (500)	$ 14,404	$ 13,904	$ 5,000		$ 5,000	$ (5,500)	$ 14,404	$ 8,904
(c)	Equipment purchases/Rentals/Rebates/Vouchers	$ 161,250	$ 19,000	$ 180,250	$ 14,150		$ 14,150	$ 147,100	$ 19,000	$ 166,100
(d)	Materials/Installation/Implementation	$ 69,000	$ 18,681	$ 87,681			$ -	$ 69,000	$ 18,681	$ 87,681
(e)	Implementation verification	$ 7,500	$ 8,000	$ 15,500			$ -	$ 7,500	$ 8,000	$ 15,500
(f)	Project legal/License/Insurance fees	$ -	$ 45,000	$ 45,000			$ -	$ -	$ 45,000	$ 45,000
(g)	Structures	$ -	$ -	$ -			$ -	$ -	$ -	$ -
(h)	Land Purchase/Easement	$ -	$ -	$ -			$ -	$ -	$ -	$ -
(i)	Environmental Compliance/Mitigation/Enhancement	$ -	$ -	$ -			$ -	$ -	$ -	$ -
(j)	Construction	$ -	$ -	$ -			$ -	$ -	$ -	$ -
(k)	Other (Operating Cash)	$ 335,000	$ -	$ 335,000			$ -	$ 335,000	$ -	$ 335,000
(l)	Operation, monitoring and assessment	$ -	$ 229,593	$ 229,593		$ 30,325	$ 30,325	$ -	$ 199,268	$ 199,268
(m)	Report preparation	$ 2,000	$ 2,500	$ 4,500			$ -	$ 2,000	$ 2,500	$ 4,500
(n)	Outreach and information sharing	$ 126,250	$ -	$ 126,250	$ 21,640		$ 21,640	$ 104,610	$ -	$ 104,610
(o)	Subtotal	$ 723,000	$ 657,939	$ 1,380,939	$ 40,790	$ 69,327	$ 110,117	$ 682,210	$ 588,612	$ 1,270,822
(p)	Overhead (8%)		$ 148,931	$ 148,931		$ 5,546	$ 5,546		$ 143,385	$ 143,385
(q)	Contingency (10%)		$ 30,379	$ 30,379		$ -			$ 30,379	$ 30,379
(r)	Total (o+p+q)	$ 723,000	$ 837,249	$ 1,560,249	$ 40,790	$ 74,873	$ 115,663	$ 682,210	$ 762,376	$ 1,444,586

7. **Schedule Status:** With the exception of the Zenon 1000 Pilot Demonstration, (Task 1) we are approximately on schedule. The Zenon advanced filtration system is promising delivery in late January/early February 2008. In order to achieve 1 year's operation experience and data collection with the Zenon system we will need to run through at least February-09. This would impact our overall schedule, but since we are running significantly under budget we do not see where this extension would impact the overall budget.

8. **Plans for Next Quarter:** Q1-08 will see the completion of the three standard membrane manufacturers' testing (Tasks 2, 3, and 4), installation of the Zenon 1000 system (Task 1) and commencement of the DOW Hybrid membrane demonstration (Task 5).

9. **Attachments:** n/a

All quarterly reports should be publicly disclosable and not contain confidential, proprietary or business sensitive information.

Task and % Complete Progress Table

Agreement Number	Starting Date:	Completion Date:	Quarter-Year	Report Number	PERCENT OF			
4600007440	4.2.07	12.31.08	Q4-2007	3				
Grantee Agency Name: Affordable Desalination Collaboration		% Time Elapsed 33%	Total Grant Funds used $ 237,624	Grant funds this Quarter $ 74,873				
Name of Project: Optimizing Seawater Reverse Osmosis for Affordable Desalination								

TASKS	YEAR / MONTH	2007 Qtr 2	2007 Qtr 3	2007 Qtr 4	2008 Qtr 1	2008 Qtr 2	2008 Qtr 3	Project	Task Complete Last Report	Task Complete This Report	Project Complete
Task 1: Zenon 1000 pilot demonstration								20	5	0	1
Task 2: Toray low energy membrane demonstration								10	80	20	10
Task 3: Koch low energy membrane demonstration								10	60	40	10
Task 4: Hydranautics low energy membrane demonstration								10	0	40	4
Task 5: Dow-FILMTEC hybrid membrane demonstration								10	0	0	0
Task 6: Unbalanced PX high recovery testing								20	0	0	0
Task 7: Interstage-PX hybrid high recovery testing								20	0	0	0
Show Progress by Use of Bar Chart	**Scheduled =**							100			
	Completed =										25

Schedule

Table G-2 ADC Detailed Project Schedule.

ID	Task Name	Duration	Start	Finish	Estimated Cost
1	Agreement development	168 days	Tue 8/1/06	Thu 3/22/07	
2	Final aggrement signed	5 days	Fri 3/23/07	Thu 3/29/07	
3	Project begins	1 day	Mon 4/2/07	Mon 4/2/07	
4	**Zenon 1000 Pilot Demonstration**	**256 days**	**Thu 11/15/07**	**Thu 11/6/08**	**$183,787.00**
5	Install and test Zenon System	18 days	Thu 11/15/07	Mon 12/10/07	
6	Operate and monitor Zenon 1000 membrane pilot system	235 days	Thu 12/13/07	Wed 11/5/08	
7	Complete Zenon testing	1 day	Thu 11/6/08	Thu 11/6/08	
8	**TorayTM800C low energy membrane demonstration**	**51 days**	**Mon 4/30/07**	**Mon 7/9/07**	**$272,413.00**
9	Install Toray TM800C Membranes	2 days	Mon 4/30/07	Tue 5/1/07	
10	TM800C Ripening period	15 days	Wed 5/2/07	Tue 5/22/07	
11	TM800C 9 flux and recovery points	18 days	Wed 5/23/07	Fri 6/15/07	
12	TM800C Most affordable point	15 days	Mon 6/18/07	Fri 7/6/07	
13	Complete Toray TM800C testing	1 day	Mon 7/9/07	Mon 7/9/07	
14	Submit project update report to DWR	5 days	Mon 7/9/07	Fri 7/13/07	
15	**Koch low energy membrane demonstration**	**68 days**	**Tue 7/10/07**	**Thu 10/11/07**	**$363,218.00**
16	Install membranes	2 days	Tue 7/10/07	Wed 7/11/07	
17	Ripening period	20 days	Thu 7/12/07	Wed 8/8/07	
18	9 flux and recovery points	25 days	Thu 8/9/07	Wed 9/12/07	
19	Most affordable point	20 days	Thu 9/13/07	Wed 10/10/07	
20	Complete Koch testing	1 day	Thu 10/11/07	Thu 10/11/07	
21	Submit project update report to DWR	5 days	Thu 10/11/07	Wed 10/17/07	
22	Innovative PX flow schemes work shop	2 days	Thu 10/11/07	Fri 10/12/07	
23	**Hydranautics low energy membrane demonstration**	**68 days**	**Fri 10/12/07**	**Tue 1/15/08**	**$363,218.00**
24	Install membranes	2 days	Fri 10/12/07	Mon 10/15/07	
25	Ripening period	20 days	Tue 10/16/07	Mon 11/12/07	
26	9 flux and recovery points	25 days	Tue 11/13/07	Mon 12/17/07	
27	Most affordable point	20 days	Tue 12/18/07	Mon 1/14/08	
28	Complete Hydranautics testing	1 day	Tue 1/15/08	Tue 1/15/08	
29	Submit project update report to DWR	5 days	Tue 1/15/08	Mon 1/21/08	
30	Member workshop and progress report	2 days	Tue 1/15/08	Wed 1/16/08	
31	**DOW Hybrid Membrane Demonstration**	**49 days**	**Thu 1/17/08**	**Tue 3/25/08**	**$261,731.00**
32	Install DOW hybrid membranes	2 days	Thu 1/17/08	Fri 1/18/08	
33	DOW Hybrid Ripening period	15 days	Thu 1/17/08	Wed 2/6/08	
34	DOW Hybrid 9 flux and recovery points	18 days	Thu 2/7/08	Mon 3/3/08	
35	DOW Hybrid Most affordable point	15 days	Tue 3/4/08	Mon 3/24/08	
36	Complete Koch testing	1 day	Tue 3/25/08	Tue 3/25/08	
37	Submit project update report to DWR	5 days	Tue 3/25/08	Mon 3/31/08	
38	Order long lead interstage-PX hybrid items	45 days	Tue 3/25/08	Mon 5/26/08	
39	**Unbalanced PX high recovery testing**	**76 days**	**Wed 3/26/08**	**Wed 7/9/08**	**$405,949.00**
40	Install PX flow scheme membrane set	2 days	Wed 3/26/08	Thu 3/27/08	
41	Flush and base line membranes	10 days	Fri 3/28/08	Thu 4/10/08	
42	Exicute unbalance test protocl @ 9 points	18 days	Fri 4/11/08	Tue 5/6/08	
43	PX unbalanced most affordable point (24/7 for 2 months)	45 days	Wed 5/7/08	Tue 7/8/08	
44	Clean membranes	2 days	Wed 6/4/08	Thu 6/5/08	
45	Complete Unbalanced PX testing	1 day	Wed 7/9/08	Wed 7/9/08	
46	Submit project update report to DWR	5 days	Wed 7/9/08	Tue 7/15/08	
47	**Interstage-PX hybrid high recovery testing**	**86 days?**	**Wed 7/9/08**	**Wed 11/5/08**	**$459,364.00**
48	Reconfigure system for Interstage-PX hybrid design	10 days	Wed 7/9/08	Tue 7/22/08	
49	Exicute interstage-PX hybrid protocol 18 points	30 days	Wed 7/23/08	Tue 9/2/08	
50	Interstage-PX hybrid most affordable point (24/7 for 2 months)	45 days	Wed 9/3/08	Tue 11/4/08	
51	Clean membranes	2 days	Wed 10/1/08	Thu 10/2/08	
52	Complete Interstage-PX Hybrid testing	1 day?	Wed 11/5/08	Wed 11/5/08	
53	Complete ADC Prop 50 testing	1 day	Wed 11/5/08	Wed 11/5/08	
54	Write final report	30 days	Wed 11/5/08	Tue 12/16/08	
55	Submit final report, billing, conclude project	2 days	Wed 12/17/08	Thu 12/18/08	
56	Member/general workshop and publish results	2 days	Fri 12/19/08	Mon 12/22/08	
57	Project Duration	450 days	Tue 4/3/07	Mon 12/22/08	

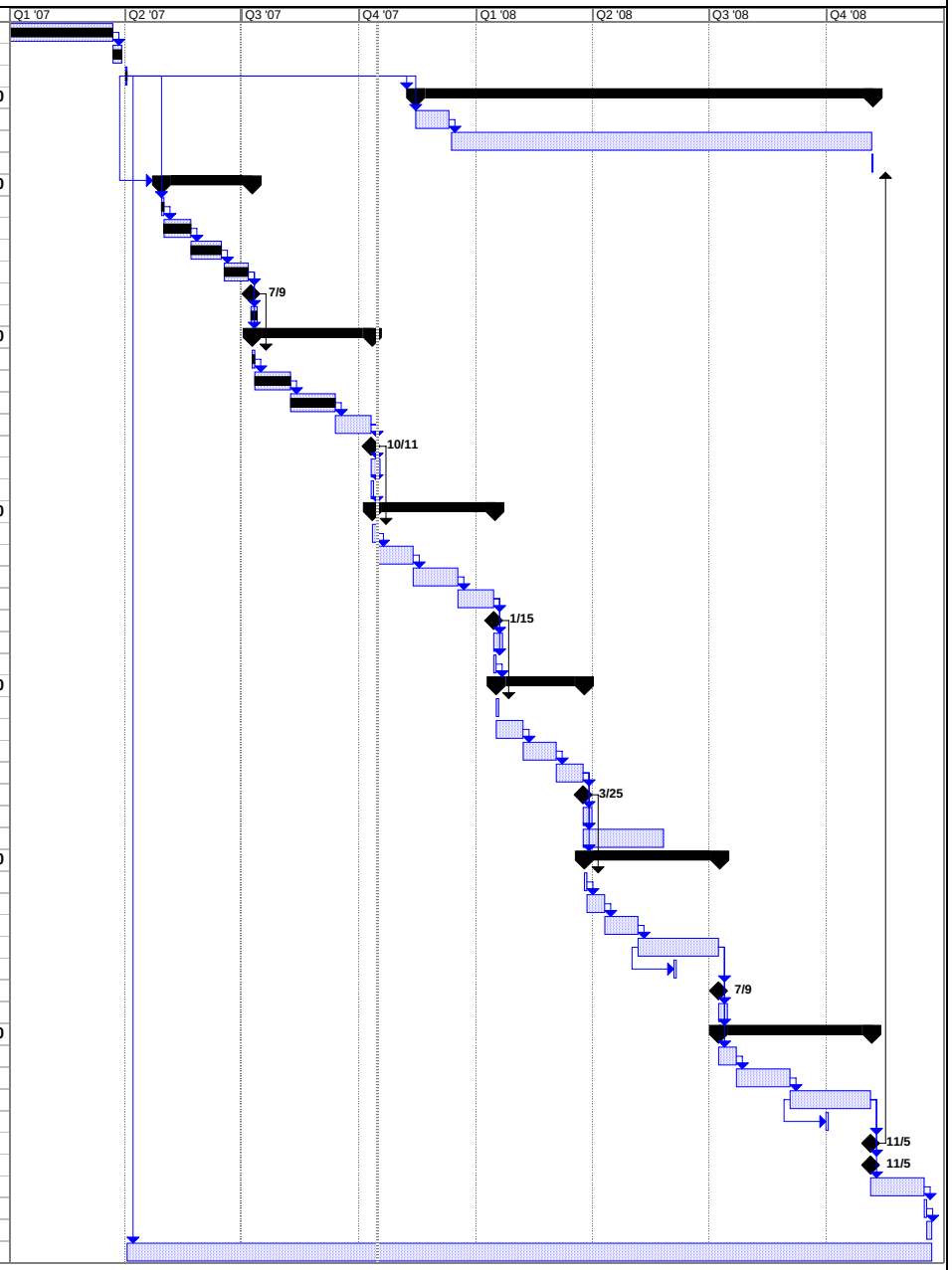

Project: ADC 2007 Project Schedule
Date: Mon 10/15/07

Task		Summary		Rolled Up Progress		Project Summary	
Progress		Rolled Up Task		Split		Group By Summary	
Milestone		Rolled Up Milestone		External Tasks		Deadline	

Attachments

1. ADC II Membership Participation List
2. Water Quality, Flow and Pressure and Power Data

ADC Membership List 6-1-07

ADC Membership	Contact	Tel #	e-mail
California Department of Water Resources	Fawzi Karajeh, Ph.D.	916-651-9669	fkarajeh@water.ca.gov
California Energy Commission	Shahid Chaudhry	916-654-4858	Schaudhr@energy.state.ca.us
Carollo Engineers	Thomas F. Seacord, P.E.	208-376-2288	tseacord@carollo.com
City of Santa Cruz Water Department	Bill Kocher, Director	(831) 420-5200	bkocher@ci.santa-cruz.ca.us
David Brown Union Pumps - Textron	Rick Hammond	269 209 4599	rhammond@dbup.textron.com
Energy Recovery Inc.	GG Pique	510-483-7370	icameron@energy-recovery.com
FilmTec Corporation	Steven Coker	979 238-1815	LDJohnson@dow.com
Koch Membrane Systems	Rick Lesson	858-635-1053	rklesan@kochmembrane.com
Marin Municipal Water District	Bob Castle	415-945-1556	bcastle@marinwater.org
Metropolitan Municipal Water District of Southern California	Stephen N. Arakawa Warren Teitz	213-217-6000 (213) 217-7418	wteitz@mwdh2o.com
Municipal Water District of Orange County	Karl Seckel	(714) 963-3058	kseckel@mwdoc.com
Naval Facilities Engineering Service Center	Bill Varnava	805-982-6640	william.varnava@navy.mil
New Water Supply Coalition (US Desal Coalition)	Hal Furman	858-456-3502sd 202-737-0700wa	Hal.Furman@USDesal.org
Pentair - CodeLine Pressure Vessels	Rob Donofrio	909-476-7292	rdonofrio@pentairwater.com
Poseidon Resources	Nikolay Voutchkov	203-327-7740 ext 126	nvoutchkov@poseidon1.com
San Diego County Water Authority	Robert Yamada Cesar Lopez	(858) 522-6600 858-522-6745	ryamada@sdcwa.org
Sandia National Laboratories	Richard Kottenstette	(505) 845-3270	rkotten@sandia.gov
Toray Membranes	Randy Truby	858-679-0770	Truby.Randy@toraymem.com
US Bureau of Reclamation	Steve Dundorf Michelle Chapman	303-445-2263 303-445-2264	SDUNDORF@do.usbr.gov
West Basin Municipal Water District	Paul E. Shoenberger Phil Lauri	(310) 660-6218 (310) 660-6238	pauls@wcbwater.org
Zenon	Annyse Balkwill	905-465-3030 x3468	annyse.balkwill@ge.com

TIME			CALCULATED PARAMETERS			TEMP	PRESSURES										FLOWS				MAIN PANEL KW METER				VFD KW METER			
		Operation	RO	Flux	Power		P_{MF-in}	P_{MF-out}	P_{CF-in}	P_{CF-out}	$P_{PX-Feed\ In}$	$P_{PX-conc\ out}$	$P_{PX-boost\ suct}$	P_{F-SYS}	P_{C-SYS}	P_{P-SYS}	$Q_{F-HP\ Pump}$	$Q_{PX\ Pump}$	$Q_{Feed\ PX-in}$	Q_{P-SYS}	A_{sys}	P HP/PX	P booster	Power	PX power	HP Power	Feed Pump	
Date	Time	Time	Recovery %	Gfd	kWh/m3	Influent	(psi)	(psi)	(psi)	(psi)	(psi)	(psi)	(psi)	(psi)	(psi)	(psi)	(gpm)	(gpm)	(gpm)	(gpm)	amp	(kw)	(kw)	Factor	(kw)	(kw)	(kw)	Notes
MM/DD/YY	hh:mm	hh.hh				Temp F	1	2	3	4	5	6	7	8	9	10	11	12	13	14	15	16	17	18	19	20	21	
Toray membranes - TM800-400										**Membrane Ripening Period**																		
5/30/2007	11:15	4151.28	42.3%	7.47	1.90	57.0	51.2	39.4	38.8	33.9	34.7	27.7	800	818	808	2.9	44.0	57.95	59.56	43.6	25.00	18.85	nd	0.900	0.90	17.00	5.00	
6/5/2007	11:30	4198.44	43.0%	7.46	1.87	58.0	51.2	38.4	37.8	32.9	34.0	27.1	790	807	798	2.5	44.0	57.60	57.60	43.5	24.50	18.48	nd	0.900	0.85	16.50	4.95	
6/6/2007	10:15	4218.73	42.6%	7.47	1.90	58.0	51.1	40.5	39.8	38.6	35.6	28.6	790	807	800	2.7	44.0	58.24	58.75	43.6	24.40	18.80	nd	0.900	0.85	16.50	4.93	bl
6/7/2007	9:25	4239.52	42.6%	7.46	1.87	58.0	51.2	40.7	40.0	38.8	33.7	27.1	795	815	802	2.5	43.5	57.80	58.70	43.5	24.40	18.50	nd	0.900	0.85	16.60	4.93	bl
6/11/2007	11:45	4256.49	43.1%	7.49	1.84	59.8	51.0	43.8	43.3	36.5	36.0	30.0	785	800	790	2.8	41.2	57.53	57.75	43.7	24.00	18.22	nd	0.898	0.90	16.30	4.90	jm
6/12/2007	9:30	4278.07	42.5%	7.47	1.87	60.0	51.0	22.4	21.9	20.5	15.5	9.7	780	795	785	2.5	42.5	57.50	59.10	43.6	24.50	18.55	nd	0.898	0.90	16.60	4.91	bl
6/13/2007	11:45	4299.24	42.7%	7.49	1.84	61.0	50.5	29.0	28.0	23.8	23.0	15.0	780	800	790	2.4	43.0	57.47	58.76	43.7	24.50	18.24	nd	0.900	0.90	16.30	4.95	bv
6/14/2007	9:00	4316.67	42.8%	7.47	1.82	62.0	50.8	39.0	38.0	32.5	32.0	25.5	770	795	790	2.4	43.5	57.66	58.32	43.6	23.80	18.06	nd	0.899	0.90	16.30	4.95	bv
										12 Point flux and Recovery Period																		
6/19/2007	10:12	4341.84	42.5%	6.00	1.71	62.0	53.9	42.3	42.0	40.9	39.8	34.7	735	745	742	2.2	35.5	45.70	47.27	35.0	19.75	13.57	nd	0.842	0.50	12.10	4.65	bl
6/20/2007	10:10	4364.19	46.4%	6.00	1.78	61.5	54.0	44.2	43.9	43.0	41.9	38.4	780	790	785	1.3	32.8	39.68	40.39	35.0	19.80	14.15	nd	0.840	0.35	12.60	4.55	bl px out tds high. re-run point on 6-21
06/21/07	9:45	4386.12	47.0%	5.98	1.77	60.5	54.4	47.8	47.3	46.2	45.0	40.9	775	782	778	1.2	35.5	39.43	44.53	34.9	19.75	14.05	nd	0.845	0.29	12.60	4.59	bl Unbalanced PX to compensate low flo
06/22/07	10:20	4410.71	50.1%	5.98	1.85	62.0	54.5	39.5	39.0	38.1	36.9	33.3	808	819	815	0.9	36.0	34.71	40.95	34.9	20.44	14.68	nd	0.862	0.29	13.50	4.55	bl Unbalanced PX to compensate low flo
06/26/07	10:20	4432.57	41.8%	7.47	1.82	63.0	50.4	32.9	32.1	30.2	27.4	19.0	759	779	770	1.9	44.5	59.28	60.74	43.6	23.85	18.01	nd	0.900	0.95	15.19	4.95	bl
06/27/07	9:50	4454.19	45.8%	7.47	1.87	64.0	52.0	36.9	36.1	34.5	33.0	27.4	804	819	811	1.9	44.5	50.18	51.65	43.6	23.25	18.51	nd	0.902	0.61	16.90	4.83	bl
06/28/07	9:10	4475.80	49.4%	7.42	1.92	64.5	52.8	39.1	38.5	37.0	33.5	29.1	835	847	840	1.9	44.0	44.31	47.23	43.3	24.73	18.84	nd	0.902	0.48	17.35	4.75	bl Unbalanced PX to compensate low flo
06/29/07	9:55	4497.25	43.3%	8.91	1.95	65.0	47.5	29.5	28.3	25.8	23.8	14.1	805	832	819	3.1	51.5	68.02	68.10	52.0	29.92	23.04	nd	0.921	1.37	20.50	5.17	bl
07/03/07	nd	4520.51	45.9%	8.97	1.93	65.0	48.8	34.6	32.7	30.2	28.1	20.0	830	855	840	3.3	51.7	60.03	61.70	52.3	29.90	22.92	nd	0.918	0.97	20.90	5.11	bl
07/05/07	nd	4527.09	49.7%	8.97	1.98	65.5	50.0	43.3	42.5	40.2	38.6	33.0	880	890	885	3.3	51.7	52.55	52.92	52.3	30.40	23.47	nd	0.920	1.00	21.60	5.00	bv
07/06/07	nd	4532.36	43.4%	9.91	1.98	64.0	44.0	32.0	30.5	27.5	24.5	13.0	820	850	840	4.5	58.0	77.44	75.38	57.8	33.60	26.05	nd	0.922	1.80	24.10	5.40	bv
07/09/07	nd	4536.59	46.0%	9.98	2.01	62.5	46.5	37.0	35.8	32.8	29.7	21.0	857	883	870	4.0	56.5	67.31	68.44	58.2	34.60	26.53	nd	0.930	1.45	25.10	5.37	bl
07/10/07	nd	4543.50	50.3%	9.93	2.06	64.0	47.0	35.0	34.0	28.0	29.5	22.8	910	930	920	4.3	58.0	57.62	57.25	57.9	35.05	27.15	nd	0.922	0.90	26.10	5.20	bv
										Most Affordable Point (MAP)																		
07/24/07	17:15	4564.69	50.4%	9.00	2.12	66.0	47.5	34.0	33.0	27.0	29.5	24.0	930	950	940	3.6	52.0	51.56	51.72	52.5	32.75	25.28	nd	0.922	0.7	23.5	4.7	bv
07/26/07	16:45	4591.27	50.2%	9.00	2.10	67.0	49.0	34.0	32.5	27.0	29.0	23.5	925	940	930	3.5	52.0	50.51	52.10	52.5	32.61	25.04	nd	0.925	0.7	23.3	4.9	bv
07/27/07	15:10	4607.91	50.6%	9.00	2.13	66.0	55.5	33.0	32.5	30.0	28.0	22.5	930	950	940	3.25	52.0	51.93	51.25	52.5	33.03	25.35	nd	0.923	0.8	23.5	5.8	bv
08/07/07	9:23	4637.68	50.3%	8.95	2.12	66.0	58.2	33.9	32.9	30.9	29.5	23.9	924	940	935	3.3	51.0	50.93	51.52	52.2	32.74	25.09	nd	0.921	0.65	23.2	6.05	bl
08/08/07	9:15	4658.32	50.3%	8.98	2.15	63.0	53.2	33.7	33.0	30.6	29.1	23.8	941	957	948	3.25	51.5	50.67	51.71	52.4	33.25	25.55	nd	0.921	0.66	23.7	5.39	bl
08/09/07	9:10	4680.36	50.3%	8.97	2.15	63.0	57.8	33.8	33.0	27.3	28.5	23.1	945	959	945	3.25	51.0	50.78	51.65	52.3	33.32	25.59	nd	0.92	0.65	23.75	6	bl
08/10/07	9:13	4701.86	50.4%	8.98	2.14	64.0	52.4	33.2	32.9	30.5	27.0	22.5	943	959	946	3.25	51.5	51.08	51.60	52.4	32.97	25.51	nd	0.922	0.65	23.63	5.3	bl
08/14/07	1:48	4721.01	50.2%	8.97	2.10	66.0	49.8	33.2	32.4	30.1	29.0	23.3	925	941	933	2.8	51.0	50.55	51.90	52.3	32.13	24.98	nd	0.926	0.66	23.19	5.07	bl
08/15/07	9:48	4739.81	50.1%	8.97	2.13	64.0	51.5	33.8	33.0	30.6	29.2	23.8	940	955	945	3.25	51.5	51.59	52.15	52.3	33.15	25.31	nd	0.925	0.65	23.49	5.15	bl
08/16/07	8:31	4761.17	50.2%	8.97	2.16	62.5	51.5	34.0	33.2	27.2	28.8	23.4	950	965	960	3.5	51.5	50.85	51.93	52.3	33.27	25.66	nd	0.924	0.68	23.84	5.15	bl
08/17/07	9:25	4784.47	50.2%	8.95	2.17	62.5	51.1	33.4	32.9	27.0	26.9	22.3	955	968	961	3.25	52.0	50.83	51.85	52.2	33.31	25.74	nd	0.923	0.67	23.9	5.12	bl
			MAP Average		2.12																							
			MAP Maximum		2.17																							
			MAP Minimum		1.98																							
Koch membranes - TFC 2822HF-400										**Membrane Ripening Period**																		
08/22/07	9:10	4805.09	42.3%	7.47	1.78	64.0	48.0	33.8	32.9	27.1	29.2	21.9	736	759	745	2.2	44.0	57.86	59.58	43.6	23.27	17.58	nd	0.899	0.95	15.6	4.68	bl
08/23/07	9:10	4827.55	42.5%	7.51	1.77	64.0	49.1	33.9	33.1	30.8	29.2	21.9	739	762	749	2.2	44.0	57.76	59.14	43.8	23.31	17.62	nd	0.900	0.95	15.6	4.81	bl
08/24/07	9:50	4850.52	42.4%	7.51	1.76	64.0	48.1	33.9	33.2	30.7	29.3	22.1	738	759	747	2.2	44.0	57.74	59.54	43.8	23.12	17.54	nd	0.897	0.95	15.6	4.65	bl
08/27/07	1:15	4856.07	42.6%	7.53	1.75	62.0	40.1	33.7	32.7	27.0	29.1	21.9	737	758	744	1.9	44.5	57.62	59.23	43.9	23.09	17.44	nd	0.903	0.94	15.6	3.77	bl
08/28/07	8:35	4875.27	42.6%	7.53	1.76	61.0	48.5	34.0	33.2	30.7	29.7	22.0	740	760	750	2.6	44.0	56.62	59.14	43.9	23.45	17.53	nd	0.900	0.95	15.6	4.70	bV
08/29/07	14:30	4903.54	42.7%	7.53	1.76	60.0	47.5	33.5	33.0	30.5	29.0	22.0	750	770	755	2.1	44.0	56.12	59.03	43.9	23.29	17.57	nd	0.901	0.95	15.7	4.80	bv
08/30/07	8:25	4919.93	42.5%	7.51	1.78	59.9	43.5	34.0	33.2	30.8	29.7	22.0	750	770	760	2.5	44.0	57.35	59.16	43.8	23.29	17.68	nd	0.902	0.95	15.8	4.10	bv
08/31/07	10:10	4942.55	42.6%	7.51	1.78	59.9	44.8	34.0	33.2	30.8	29.7	22.2	755	775	765	2.5	44.0	57.87	58.95	43.8	23.47	17.72	nd	0.902	0.95	15.8	4.25	bv
09/05/07	2:15	4977.24	42.3%	7.51	1.76	62.0	47.9	33.6	32.7	27.0	29.1	21.9	739	758	745	1.9	44.1	58.21	59.82	43.8	23.18	17.46	nd	0.902	1.04	15.5	4.05	bl
09/06/07	9:05	4994.49	42.5%	7.53	1.76	60.0	43.0	34.1	33.2	27.2	29.3	22.1	737	760	746	2.3	44.5	58.34	59.35	43.9	23.30	17.57	nd	0.905	1.05	15.6	4.05	bl
09/07/07	9:55	5019.27	42.3%	7.53	1.73	62.0	57.0	34.5	33.5	30.8	29.8	22.2	738	750	740	2.5	44.5	58.98	59.86	43.9	23.36	17.29	nd	0.898	1.00	15.3	5.90	bv
										12 Point flux and Recovery Period																		
09/11/07	13:00	5044.4	42.9%	5.98	1.67	62.0	42.0	32.0	31.5	30.0	29.8	25.0	710	725	720	1.1	35.0	44.54	46.50	34.9	18.47	13.23	nd	0.852	0.55	11.8	3.30	bv
09/12/07	16:15	5071.67	45.7%	5.98	1.72	61.8	48.0	32.0	31.5	30.0	29.8	26.0	750	760	755	1.1	35.0	38.86	41.39	34.9	18.59	13.63	nd	0.853	0.40	12.1	3.85	bv px out tds high.
10/03/07	9:35	5269.17	46.9%	5.98	1.67	62.0	49.5	32.8	32.2	30.5	30.0	25.7	730	740	735	1.5	35.0	39.58	46.02	34.9	18.69	13.20	nd	0.845	0.45	12.0	4.15	bv
09/13/07	15:45	5093.8	50.3%	5.98	1.82	60.0	38.0	32.0	31.5	30.0	29.8	27.0	800	810	805	1.1	35.0	32.29	34.47	34.9	19.78	14.44	nd	0.859	0.30	12.9	2.80	bv px out tds high.
10/19/07	9:20	5438.31	42.5%	7.47	1.79	58.0	58.9	29.0	28.2	25.3	23.9	16.9	745	767	759	2.7	44.5	57.81	58.92	43.6	23.38	17.76	nd	0.899	1.05	15.7	6.05	bl
10/10/07	14:00	5303.19	42.6%	7.54	1.77	59.0	41.4	34.2	33.3	27.0	29.4	22.0	739	759	725	3.2	44.5	57.62	59.36	44.0	23.51	17.68	nd	0.905	1.07	15.7	4.95	bl
10/11/07	8:35	5321.8	42.6%	7.53	1.77	58.0	49.3	35.0	34.1	27.8	29.8	22.6	742	762	751	3.1	44.5	57.99	59.16	43.9	23.23	17.61	nd	0.903	0.95	15.7	4.88	bl
10/18/07	9:35	5414.55	42.7%	7.53	1.77	58.0	47.1	35.1	34.1	27.8	29.8	22.1	741	764	751	2.8	44.5	57.86	59.03	43.9	23.48	17.67	nd	0.894	1.05	15.7	4.45	bl
10/02/07	8:25	5244.08	42.9%	7.54	1.74	61.0	46.8	34.8	34.0	31.0	29.9	22.6	735	755	750	3.1	44.0	57.13	58.53	44.0	22.82	17.35	nd	0.901	0.95	15.6	4.45	bv

09/14/07	16:35	5107.02	43.2%	7.51	1.77	60.0	46.0	34.0	33.0	30.5	29.0	22.0	750	765	760	2.2	44.0	57.32	57.55	43.8	23.06	17.58	nd	0.902	0.95	15.8	4.50	bv
09/17/07	14:40	5113.22	45.8%	7.51	1.79	60.0	39.0	33.2	32.7	30.4	29.3	23.7	767	784	778	2.2	44.5	49.68	51.84	43.8	23.31	17.79	nd	0.905	0.95	16.2	3.39	bl
10/04/07	16:00	5295.92	47.2%	7.51	1.80	63.0	50.0	33.0	32.5	30.0	29.5	24.0	795	810	800	2.1	44.0	43.06	47.48	43.8	23.57	17.92	nd	0.905	0.55	16.4	4.75	bv
09/18/07	9:00	5131.54	49.9%	7.47	1.88	62.0	45.0	33.1	32.5	27.1	29.7	25.3	820	835	825	2.4	44.5	42.41	43.85	43.6	24.65	18.57	nd	0.907	0.50	17.2	3.82	bl
09/19/07	12:15	5150.03	42.3%	8.93	1.82	63.0	49.6	35.9	34.9	27.8	29.5	19.6	759	785	768	3.6	52.0	69.56	70.98	52.1	28.52	21.58	nd	0.916	1.60	19.1	5.71	bl
09/20/07	9:26	5169.9	45.8%	8.95	1.86	62.0	48.2	35.1	34.2	27.6	29.6	21.8	798	822	805	3.6	52.0	60.16	61.85	52.2	28.64	22.05	nd	0.920	1.10	19.9	5.16	bl
09/21/07	11:13	5194.13	50.1%	8.90	1.93	63.0	48.3	34.1	33.3	26.9	29.4	23.8	845	864	855	3.4	52.0	50.22	51.77	51.9	29.64	22.79	nd	0.922	0.90	21.1	4.88	bl
10/17/07	9:00	5392.24	42.2%	9.98	1.89	58.5	52.3	32.1	30.7	23.1	23.7	11.9	788	831	805	5.1	57.5	77.42	79.64	58.2	33.30	24.95	nd	0.926	2.34	23.4	6.65	bl re-run point to avoid FWF water quali
09/25/07	14:08	5204.98	42.7%	9.98	1.89	65.0	49.5	36.7	35.3	27.1	29.1	16.9	768	805	785	4.3	57.0	77.36	77.97	58.2	32.80	25.01	nd	0.933	2.25	22.8	6.35	bl
10/16/07	14:30	5375.55	45.8%	9.96	1.97	60.0	54.1	30.2	29.1	22.2	23.4	14.9	829	863	843	4.3	58.0	66.68	68.78	58.1	33.81	25.95	nd	0.934	1.66	24.5	6.53	bl re-run point to avoid FWF water quali
09/26/07	17:00	5212.75	46.3%	9.98	1.89	65.0	52.0	35.5	34.2	30.8	29.0	20.0	810	840	825	4.2	57.0	66.96	67.62	58.2	32.50	25.03	nd	0.925	1.60	23.3	6.3	bv
10/11/07	14:00	5325.75	49.6%	10.01	2.00	59.0	43.2	35.8	34.5	27.2	29.4	22.2	874	899	882	4.7	58.0	56.62	59.37	58.4	34.64	26.59	nd	0.930	1.07	25.7	4.68	bl re-run point to avoid FWF water quali
10/12/07	9:08	5344.85	49.7%	9.98	2.03	59.0	55.9	35.8	34.7	27.6	29.5	22.4	877	900	885	4.8	58.0	56.75	58.99	58.2	34.78	26.78	nd	0.927	1.08	25.8	6.37	bl re-run point to avoid FWF water quali
09/27/07	15:50	5221.39	50.7%	9.99	1.96	65.0	54.8	34.8	33.5	30.5	29.2	22.3	860	885	875	4.2	57.0	55.57	56.60	58.3	33.76	25.91	nd	0.928	0.95	25.1	6.15	bv
										Most Affordable Point (MAP) Period																		
10/30/07	14:49	5470.29	44.7%	9.00	1.88	60.0	49.6	35.8	34.8	27.9	29.8	20.9	795	822	804	3.7	52.5	59.86	64.84	52.5	28.78	22.37	nd	0.922	1.25	20.1	5.4	bl
10/31/07	10:19	5487.88	44.9%	9.02	1.89	60.0	48.1	36.0	34.9	27.9	29.7	21.2	798	823	806	3.8	52.5	59.91	64.62	52.6	29.23	22.52	nd	0.922	1.27	20.2	5.21	bl
11/01/07	10:16	5510.05	45.5%	8.98	1.87	60.5	48.3	35.8	34.8	27.2	29.7	21.4	795	822	804	3.8	52.5	59.61	62.71	52.4	28.81	22.21	nd	0.921	1.23	20.0	5.13	bl
11/02/07	10:13	5532.28	45.6%	8.98	1.86	61.0	47.9	35.9	34.8	27.4	29.6	21.6	795	820	803	3.8	52.5	60.54	62.55	52.4	28.92	22.19	nd	0.919	1.25	19.9	5.1	bl
11/06/07	14:05	5556.71	46.1%	8.98	1.87	60.0	46.9	35.7	34.7	27.2	29.8	21.9	795	823	806	3.8	52.5	59.91	61.15	52.4	28.91	22.29	nd	0.922	1.21	20.2	4.95	bl
11/07/07	10:02	5574.64	46.2%	8.97	1.88	60.0	46.4	35.8	34.8	27.3	29.7	21.9	800	825	808	3.7	52.5	59.93	60.96	52.3	29.58	22.32	nd	0.922	1.25	20.1	4.7	bl
11/08/07	9:23	5596.15	45.4%	8.97	1.88	59.0	46.6	35.9	34.9	27.7	29.9	21.7	800	825	813	3.8	52.5	59.74	62.96	52.3	29.61	22.38	nd	0.923	1.24	20.2	4.78	bl
11/09/07	13:16	5621.67	45.1%	8.97	1.89	59.5	45.8	35.4	34.6	27.1	29.3	21.1	800	825	809	3.3	52.0	59.92	63.62	52.3	29.15	22.48	nd	0.919	1.30	20.1	4.87	bl
11/12/07	14:30	5625.97	45.3%	8.97	1.87	60.0	42.1	35.6	34.7	27.1	29.3	21.1	792	819	800	3.3	52.5	59.93	63.14	52.3	28.93	22.21	nd	0.922	1.33	20.0	4.41	bl
11/13/07	15:37	5651.08	45.3%	8.97	1.89	60.0	50.8	35.4	34.3	26.9	29.1	20.9	796	822	804	3.2	52.5	60.32	63.15	52.3	29.18	22.42	nd	0.917	1.36	20.0	5.59	bl
11/14/07	10:18	5668.07	45.2%	8.98	1.89	60.0	46.3	35.4	34.4	26.8	29.2	20.9	799	825	807	3.2	52.5	60.44	63.42	52.4	30.87	22.45	nd	0.924	1.38	20.1	5.05	bl
11/15/07	8:20	5688.28	45.1%	8.98	1.89	60.0	47.1	36.1	35.1	27.4	29.5	21.1	800	825	807	3.6	52.5	60.18	63.85	52.4	29.79	22.49	nd	0.924	1.37	20.2	5.1	bl
11/16/07	9:52	5712.08	45.3%	8.98	1.90	59.5	49.2	36.2	35.2	27.7	29.8	21.4	802	827	816	3.8	52.5	60.24	63.15	52.4	29.87	22.57	nd	0.923	1.33	20.2	5.42	bl
										Base Line Test																		
11/19/07	14:51	5717.84	42.3%	7.47	1.76	58.5	40.3	35.0	34.1	30.9	29.7	22.2	728	756	742	3.3	44.5	57.62	59.48	43.6	22.51	17.42	nd	0.903	1.15	15.4	3.77	bl
11/20/07	14:28	5741.45	42.8%	7.49	1.74	60.0	44.0	34.5	33.8	26.9	29.5	22.1	739	759	743	2.3	44.0	57.59	58.38	43.7	23.41	17.31	nd	0.904	1.05	15.4	4.39	bl
11/21/07	9:57	5760.93	42.6%	7.49	1.74	59.5	50.8	35.0	34.2	27.2	29.7	22.3	740	758	743	2.6	44.0	57.58	58.86	43.7	23.52	17.31	nd	0.903	1.05	15.4	5.14	bl
			MAP Average		1.88																							
			MAP Maximum		1.90																							
			MAP Minimum		1.86																							
Hydranautics membranes - SWC5										**Membrane Ripening Period**																		
11/28/07	14:45	5762.13	43.0%	7.51	1.79	60.0	40.0	34.4	33.5	26.8	29.0	22.2	760	775	770	2.4	44.2	57.54	58.12	43.8	24.02	17.80	nd	0.907	0.90	16.1	3.8	jm, hyd memb 1st point, ~1hr operation
11/29/07	15:10	5772.73	42.7%	7.47	1.79	59.0	42.0	34.8	33.8	30.5	29.8	22.2	770	785	780	2.5	44.0	57.84	58.43	43.6	23.65	17.72	nd	0.909	0.95	16.0	3.95	bv
11/30/07	14:20	5795.71	42.8%	7.47	1.79	58.0	48.0	35.0	34.2	30.8	29.5	23.5	770	785	778	2.5	44.0	57.04	58.31	43.6	23.64	17.72	nd	0.905	0.95	15.9	4.7	bv
12/03/07	16:10	5803.57	42.4%	7.51	1.77	57.0	42.0	35.5	34.8	31.2	30.0	22.5	765	780	775	3.0	44.0	56.82	59.47	43.8	23.39	17.65	nd	0.902	0.90	15.8	3.95	bl
12/04/07	9:24	5820.82	42.5%	7.49	1.79	56.5	46.4	35.6	34.8	27.8	29.9	22.7	762	780	773	3.1	44.0	57.44	59.12	43.7	23.73	17.73	nd	0.904	0.91	15.9	4.5	bl
12/05/07	8:24	5841.99	42.5%	7.49	1.79	57.5	46.3	35.2	34.7	27.6	29.9	22.4	761	782	775	2.9	44.0	57.74	59.22	43.7	23.41	17.78	nd	0.903	0.91	15.9	4.43	bl
12/06/07	9:15	5865.08	42.4%	7.49	1.78	58.0	46.1	35.6	34.8	27.4	29.9	22.4	759	779	770	2.9	44.0	57.62	59.34	43.7	23.42	17.68	nd	0.904	0.95	15.9	4.45	bl
12/07/07	8:30	5886.31	42.2%	7.51	1.78	58.0	47.8	35.7	35.0	27.8	29.9	22.7	760	780	772	3.1	44.0	57.26	59.96	43.8	23.42	17.66	nd	0.901	0.91	15.9	4.63	bl
12/10/07	15:44	5893.76	42.4%	7.49	1.77	56.5	41.8	35.2	34.4	27.1	29.9	22.2	760	777	765	2.6	44.0	57.13	59.25	43.7	23.31	17.59	nd	0.902	0.92	15.8	3.95	bl
12/11/07	14:45	5916.77	42.4%	7.49	1.78	57.0	47.1	35.3	34.6	27.2	29.9	22.3	760	780	770	2.6	44.0	57.14	59.45	43.7	23.42	17.63	nd	0.903	0.93	15.9	4.64	bl
12/12/07	9:59	5934.33	42.5%	7.51	1.78	56.5	44.9	35.9	35.1	27.9	30.1	22.9	762	782	772	3.2	44.0	58.21	59.36	43.8	23.61	17.69	nd	0.903	0.91	15.9	4.23	bl
12/13/07	9:20	5957.51	42.4%	7.51	1.79	55.5	48.9	36.2	35.6	28.2	30.1	23.0	762	782	775	4.3	44.0	58.73	59.46	43.8	23.55	17.76	nd	0.904	0.92	15.9	4.77	bl
12/14/07	8:47	5979.06	42.4%	7.51	1.79	56.0	46.9	36.4	35.6	28.2	30.2	23.1	765	785	777	3.4	44.0	58.26	59.53	43.8	23.47	17.79	nd	0.899	0.91	15.9	4.3	bl
										12 Point flux and Recovery Period																		
01/04/08	10:15	6044.01	43.0%	5.97	1.70	56.5	47.1	32.9	32.3	27.3	30.1	25.0	722	738	733	1.8	35.5	46.14	49.32	34.8	18.91	13.42	nd	0.844	0.55	12.3	3.95	bl
01/08/08	13:28	6072.97	47.1%	6.00	1.78	56.5	39.1	32.1	31.8	27.1	30.0	26.6	765	779	773	1.6	36.0	39.29	45.53	35	19.11	14.14	nd	0.854	0.41	13.1	2.97	bl
01/09/08	14:40	6098.13	51.4%	5.97	1.84	56.0	43.5	32.5	32.0	30.8	29.0	26.0	800	810	805	1.7	35.0	32.92	44.74	34.8	19.89	14.53	nd	0.861	0.30	13.1	3.4	bv
01/10/08	9:15	6116.76	42.4%	7.51	1.80	56.0	53.6	34.9	33.9	28.0	30.1	22.6	762	779	769	3.3	44.0	57.44	59.56	43.8	23.62	17.88	nd	0.903	0.89	16.2	5.33	bl
01/11/08	10:05	6139.91	46.0%	7.49	1.86	56.0	41.2	33.7	33.0	32.4	29.9	24.1	801	818	805	3.1	44.5	50.01	51.33	43.7	24.17	18.41	nd	0.908	0.74	19.8	3.61	bl
01/15/08	9:51	6164.8	47.1%	7.49	1.92	56.0	45.8	33.8	32.9	27.7	30.1	25.1	842	858	845	3.1	45.0	41.98	49.13	43.7	25.02	19.02	nd	0.911	0.46	17.8	4.04	bl
01/16/08	10:19	6187.17	42.6%	9.00	1.91	56.0	47.1	36.1	34.9	28.1	29.9	19.9	803	826	818	4.3	52.5	69.36	70.77	52.5	29.57	22.72	nd	0.919	1.49	20.3	5.23	bl
01/17/08	8:44	6207.86	45.8%	9.00	1.96	56.0	46.1	36.6	34.7	30.2	30.1	22.6	850	874	860	4.6	53.5	60.12	62.15	52.5	30.29	23.39	nd	0.923	1.03	21.4	4.59	bl
01/18/08	9:28	6229.25	49.1%	8.98	2.03	56.0	44.1	34.6	33.8	28.0	30.1	23.7	899	918	905	5.8	53.5	50.74	54.42	52.4	31.37	24.12	nd	0.926	0.87	22.5	4.22	bl

Water Quality Data

TIME			pH			CONDUCTIVITY						TDS							TURBIDITY		SDI	BORON			OTHER					
				pH		Conductivity (mS/cm)						TDS (mg/L)							Turbidity (NTU)		Density Index	Boron (mg/L)				Inhibitor Pump			FEED VFD	
Date	Time	Operation Time	$pH_{F\text{-}sys}$	$pH_{P\text{-}sys}$	$pH_{C\text{-}sys}$	$C_{CF\text{-}out}$	$C_{F\text{-}PX\text{-}out}$	$C_{F\text{-}sys}$	$C_{P\text{-}sys}$	$C_{C\text{-}sys}$	$C_{C\text{-}PX\text{-}out}$	$TDS_{CF\text{-}out}$	$TDS_{F\text{-}PX\text{-}out}$	PX % Inc	$TDS_{F\text{-}sys}$	$TDS_{P\text{-}sys}$	$TDS_{C\text{-}sys}$	$TDS_{C\text{-}PX\text{-}out}$	$NTU_{MF\text{-}in}$	$NTU_{CF\text{-}out}$	$SDI_{CF\text{-}out}$	$B_{CF\text{-}out}$	$B_{F\text{-}sys}$	$B_{P\text{-}sys}$	V_{TANK}	Speed	HP VFD Speed	PX VFD Speed	VFD Speed	Notes
MM/DD/YY	hh:mm	hh.hh	SC5	SC11	SC6	SC3	SC4	SC5	SC11	SC6	SC7	SC3	SC4		SC5	SC11	SC6	SC7	CART	meter	CART	SC3	SC5	SC11	(gallons)	(gph)	(Hertz)	(Hertz)	(Hertz)	
Toray Membranes - TM800-400												**Membrane Ripening Period**																		
05/30/07	11:25	4151.46	7.90	4.40	7.61	50.70	52.35	51.62	322.30	84.62	81.53	32.56	33.77	3.7%	33.23	154.20	60.80	57.95	nd	0.040	4.0	nd	nd	nd	7.0	60/75	44.85	33.08	61.20	
06/05/07	12:05	4199.43	7.88	6.77	7.73	49.81	53.23	51.63	353.50	84.01	82.22	31.88	34.41	7.9%	33.27	169.50	60.30	58.57	nd	0.057	4.0	nd	nd	nd	11.0	70/75	33.28	44.94	61.20	
06/06/07	10:56	4219.43	7.91	7.69	7.69	50.30	52.13	51.05	333.90	83.38	81.08	32.24	33.61	4.2%	32.84	159.80	59.75	57.53	nd	0.051	3.9	nd	nd	nd	8.0	70/75	44.92	33.13	61.20	bl
06/07/07	9:58	4240.04	7.73	6.01	7.6	50.13	52.25	51.10	328.80	83.46	81.03	32.16	33.67	4.7%	32.87	157.40	59.77	57.48	nd	0.044	3.6	nd	nd	nd	5.2	70/75	44.91	33.08	61.20	bl
06/11/07	12:08	4256.76	8.07	6.75	7.83	49.62	52.71	50.86	355.70	82.83	81.73	32.62	33.62	3.1%	32.73	170.80	59.72	57.68	1.852	0.067	4.0	nd	nd	nd	23.5	70/75	44.98	33.19	61.20	bv
06/12/07	9:51	4278.47	7.90	6.4	7.77	49.27	51.03	49.98	343.20	80.85	79.22	31.57	32.85	4.1%	32.10	164.40	57.44	55.84	1.345	0.086	3.7	nd	nd	nd	21.0	70/70	44.91	33.49	61.20	bl
06/13/07	12:00	4299.52	8.10	7.05	7.9	49.04	50.86	49.93	355.70	80.89	78.95	31.40	32.72	4.2%	32.06	170.30	57.39	55.57	0.933	0.093	4.1	nd	nd	nd	18.0	70/77	44.92	33.35	61.20	bv
06/14/07	9:15	4316.9	8.10	6.96	7.89	48.97	51.31	49.86	363.30	81.13	79.33	31.37	33.06	5.4%	32.04	174.20	57.62	55.92	0.961	0.095	4.1	nd	nd	nd	15.8	70/75	44.92	33.34	61.20	bv
												12 Point flux and recovery Period																		
06/19/07	10:30	4342.16	7.99	6.29	7.79	48.88	51.57	49.87	475.50	80.39	78.43	31.28	33.21	6.2%	32.03	229.30	57.01	55.18	1.056	0.067	3.4	nd	4.6	0.91	12.5	70/75	35.83	27.51	61.20	bl
06/20/07	10:31	4364.54	7.97	6.47	7.85	49.03	53.22	50.76	519.30	85.11	82.68	31.45	34.43	9.5%	32.73	251.10	61.44	59.01	1.122	0.092	3.9	nd	4.7	0.94	9.7	70/75	35.86	24.58	61.20	bl px out tds high. re-run point on 6-21
06/21/07	10:05	4386.46	7.87	6.39	7.77	48.78	51.86	49.95	453.00	83.80	80.41	31.23	33.42	7.0%	32.08	218.20	60.05	56.94	0.802	0.079	3.9	nd	4.6	0.88	7.5	70/75	35.85	25.02	61.20	bl
06/22/07	10:36	4410.98	7.73	5.96	7.57	48.86	51.73	49.91	492.80	87.71	82.49	31.30	33.35	6.5%	32.07	237.90	63.60	58.81	0.771	0.057	3.8	nd	4.6	0.95	24.3	70/75	36.08	22.45	61.20	bl
06/26/07	10:50	4433.05	7.79	5.91	7.66	48.83	51.12	49.78	371.80	80.13	78.28	31.27	32.94	5.3%	31.97	178.50	56.71	55.03	1.121	0.087	3.6	nd	4.8	0.80	21.8	70/75	45.19	34.07	61.20	bl
06/27/07	10:10	4454.51	7.91	6.22	7.72	48.81	51.39	49.91	397.80	84.82	82.69	31.26	33.11	5.9%	32.05	191.10	60.98	59.00	0.826	0.062	3.8	nd	4.7	0.81	18.5	70/75	45.20	29.77	61.20	bl
06/28/07	9:25	4476.05	7.96	6.32	7.75	48.85	51.71	49.99	429.60	88.34	85.65	31.30	33.35	6.5%	32.12	206.70	64.14	61.70	0.757	0.085	4.3	nd	4.7	0.86	15.8	70/75	45.19	27.13	61.20	bl
06/29/07	10:13	4497.56	8.02	6.14	7.83	48.63	51.44	50.06	307.40	81.49	80.02	31.15	33.15	6.4%	32.17	146.90	57.96	56.58	0.663	0.1	4.7	nd	4.7	0.67	12.6	70/75	54.01	38.91	61.20	bl
07/03/07	8:45	4520.82	7.93	6.03	7.78	48.84	51.07	49.63	335.80	84.83	82.52	31.27	32.88	5.1%	31.87	160.90	61.01	58.87	1.127	0.102	5.0	nd	4.7	0.74	9.7	70/75	53.99	34.69	61.20	bl
07/05/07	16:25	4527.33	8.12	7.84	7.88	49.18	52.07	50.38	385.80	90.10	87.82	31.54	33.59	6.5%	32.39	185.40	65.66	63.58	0.769	0.118	5.1	nd	4.3	0.79	9.0	50/70	53.99	31.14	61.20	bv
07/06/07	14:45	4532.55	8.13	6.59	7.87	49.05	50.73	49.99	290.70	81.29	79.88	31.46	32.65	3.8%	32.12	138.80	57.80	56.45	0.87	0.1	4.8	4.2	4.1	0.65	8.0	70/70	60.00	42.39	61.20	bv
07/09/07	13:50	4536.97	7.87	5.88	7.71	48.86	52.06	50.27	305.30	84.78	83.51	31.27	33.59	7.4%	32.27	145.80	60.93	59.72	1.383	0.082	4.3	nd	4.3	0.69	7.5	70/70	60.00	39.28	61.20	bl
07/10/07	16:40	4543.67	8.07	7.51	7.82	48.84	51.42	49.90	346.10	90.52	88.04	31.34	33.12	5.7%	32.06	165.80	66.15	63.79	1.204	0.142	4.9	nd	4.2	0.74	6.0	70/70	60.00	33.37	61.20	bv
												Most Affordable Point Period																		
07/24/07	17:25	4564.92	7.87	5.51	7.97	48.86	52.21	50.12	449.70	88.35	90.23	31.36	33.67	7.4%	32.23	216.60	65.88	64.07	0.889	0.074	3.8	nd	nd	0.95	25.8	70/70	54.70	30.56	60.17	bv
07/26/07	16:50	4591.4	7.84	5.98	7.85	48.85	51.69	49.95	460.50	90.25	88.03	31.30	33.38	6.6%	32.16	222.20	65.90	63.76	0.759	0.076	3.9	nd	nd	nd	21.9	70/70	54.67	30.21	60.95	bv
07/27/07	15:25	4607.78	7.94	5.82	7.78	48.84	51.86	50.11	425.50	90.00	88.08	31.30	33.47	6.9%	32.20	205.10	65.64	63.71	0.971	0.071	2.9	nd	5.3	nd	20.0	70/70	54.66	30.64	64.80	bv
08/07/07	9:36	4637.89	8.09	5.79	7.74	48.85	52.25	50.14	421.20	90.67	88.56	31.28	33.74	7.9%	32.27	202.60	66.29	64.33	1.08	0.096	4.9	nd	nd	nd	15.7	70/75	53.88	30.14	66.00	bl
08/08/07	9:27	4658.51	7.91	5.82	7.69	48.66	51.64	49.88	370.90	90.34	87.74	31.12	33.27	6.9%	32.02	177.90	65.93	63.54	0.76	0.086	4.5	nd	nd	nd	12.6	70/75	53.85	30.15	63.30	bl
08/09/07	9:37	4680.82	7.93	5.82	7.69	48.65	51.58	49.79	360.70	90.35	87.82	31.11	33.23	6.8%	31.97	173.00	65.94	63.69	1.173	0.187	14.9	nd	nd	nd	9.8	70/75	53.84	30.15	65.95	bl
08/10/07	9:24	4702.05	7.97	5.96	7.73	48.69	51.66	49.84	360.10	90.02	87.51	31.12	33.30	7.0%	32.00	172.70	65.68	63.35	0.672	0.103	5.1	4.6	4.5	0.82	6.5	75/85	53.85	30.21	62.85	bl
08/14/07	2:14	4721.44	7.97	6.07	7.74	48.89	51.86	50.02	413.70	89.63	87.44	31.28	33.42	6.8%	32.12	198.80	65.36	63.27	0.789	0.074	4.7	4.6	4.7	0.89	23.0	80/85	53.81	30.35	61.85	bl
08/15/07	10:18	4740.31	7.91	6.27	7.67	48.95	51.86	50.01	377.30	90.15	87.89	31.29	33.43	6.8%	32.14	181.20	65.80	63.72	0.865	0.065	3.9	nd	nd	nd	20.2	75/80	53.82	30.33	62.29	bl
08/16/07		4761.36	7.82	5.82	7.61	48.77	51.74	49.92	344.60	90.69	88.25	31.21	33.34	6.8%	32.06	165.10	66.27	64.03	0.799	0.058	4.0	nd	nd	nd	17.3	70/75	53.82	30.26	61.06	bl
08/17/07	9:35	4784.63	7.81	5.83	7.62	48.67	51.77	50.04	345.40	90.45	87.94	31.14	33.36	7.1%	32.15	165.30	66.11	63.71	0.624	0.061	4.3	4.5	5.3	2.5	14.2	70/75	53.79	30.27	61.94	bl
												MAP Average		7%		188.83						MAP Average		1.19						
												MAP Maximum		8%		222.20						MAP Maximum		2.5						
												MAP Minimum		6%		165.10						MAP Minimum		0.79						
Koch membranes - TFC 2822HF-400												**Membrane Ripening Period**																		
08/22/07	9:23	4805.31	7.91	7.52	7.73	48.86	50.91	49.67	529.30	80.90	78.61	31.30	32.74	4.6%	31.88	256.00	57.42	55.31	0.543	0.068	4.0	nd	nd	nd	11.3	70/75	45.12	34.39	59.82	bl
08/23/07	9:27	4827.84	7.93	7.54	7.75	48.88	50.81	49.57	516.70	80.84	78.51	31.29	32.69	4.5%	31.83	249.70	57.36	55.22	0.791	0.067	3.9	nd	nd	nd	8.0	70/75	45.12	34.39	60.76	bl
08/24/07	10:05	4850.75	7.88	7.36	7.69	49.04	50.86	49.79	531.20	81.01	78.74	31.42	32.73	4.2%	31.97	256.90	57.51	55.45	0.803	0.066	3.9	nd	nd	nd	5.0	70/75	45.12	34.32	59.93	bl
08/27/07	1:35	4856.41	7.81	6.95	7.64	48.72	50.65	49.53	590.40	81.14	78.76	31.17	32.55	4.4%	31.78	286.00	57.62	55.45	0.482	0.061	3.5	nd	nd	nd	24.0	70/75	45.09	34.34	55.24	bl
08/28/07	8:45	4875.44	7.84	6.73	7.66	48.78	50.79	49.56	546.80	80.80	78.83	31.28	32.69	4.5%	31.79	264.60	57.34	55.48	0.563	0.059	2.3	nd	nd	nd	21.5	70/75	45.12	34.57	59.93	bv
08/29/07	14:40	4903.70	7.77	6.31	7.59	48.56	50.62	49.43	524.20	81.15	78.83	31.10	32.56	4.7%	31.76	253.20	57.58	55.35	0.671	0.043	2.7	4.5	4.5	1.3	17.5	70/75	45.12	34.39	60.18	bv
08/30/07	8:35	4920.07	7.80	6.37	7.63	48.79	50.72	49.54	497.70	80.85	78.55	31.22	32.62	4.5%	31.78	239.90	57.36	55.16	0.691	0.042	1.9	nd	nd	nd	15.0	70/75	45.12	34.48	56.96	bv
08/31/07	10:25	4942.80	7.85	6.38	7.60	48.98	50.90	49.72	489.40	80.97	78.58	31.37	32.74	4.4%	31.90	236.30	57.44	55.31	0.645	0.042	2.6	nd	nd	nd	12.0	70/75	45.12	34.62	57.92	bv
09/05/07	2:25	4977.42	7.81	6.91	7.67	48.92	51.24	49.87	571.60	80.47	78.49	31.35	32.95	5.1%	32.03	276.60	57.00	55.15	0.643	0.065	3.0	nd	nd	nd	7.5	70/75	45.12	35.32	60.44	bl
09/06/07	9:20	4994.74	7.78	6.41	7.64	48.90	51.32	49.96	542.70	80.77	78.64	31.32	33.02	5.4%	32.08	262.50	57.25	55.33	0.755	0.07	3.1	4.5	4.5	1.4	5.1	70/75	45.14	35.40	56.85	bl
09/07/07	10:05	5019.44	7.93	7.36	7.73	49.03	51.03	49.85	624.70	80.35	78.44	31.43	32.90	4.7%	32.03	302.60	56.87	55.13	0.894	0.051	3.1	nd	nd	nd	22.1	70/75	45.12	35.07	65.25	bv
												12 Point flux and recovery Period																		
09/11/07	13:10	5044.56	7.87	6.23	7.78	48.82	51.77	49.97	798.40	80.46	78.67	31.24	33.35	6.8%	32.09	388.30	57.07	55.44	0.384	0.039	2.7	4.8	4.7	1.6	18.5	70/75	35.71	28.45	54.30	bv
09/12/07	16:25	5071.85	7.83	6.18	7.66	48.73	52.46	50.23	818.60	84.47	81.68	31.14	33.82	8.6%	32.23	400.70	60.61	58.02	0.427	0.036	2.7	4.7	4.7	1.6	15.0	70/75	35.74	25.68	57.60	bv px out tds high.
10/03/07	9:45	5269.35	7.92	6.84	7.75	48.73	50.90	49.47	841.70	82.58	79.11	31.21	32.83	5.2%	31.76	411.80	58.95	55.73	0.567	0.055	2.2	nd	nd	nd	9.5	70/75	35.86	26.10	58.72	bv
09/13/07	16:10	5094.23	7.77	6.49	7.58	48.70	54.98	51.05	881.60	90.32	87.05	31.25	35.75	14.4%	32.86	431.70	65.91	62.70	0.285	0.038	3.2	4.5	4.8	1.6	12.0	70/75	35.85	23.10	51.27	bv px out tds high.
10/19/07	9:33	5438.54	7.84	6.31	7.71	48.89	51.32	49.77	519.9	81.02	78.94	31.27	33.07	5.8%	31.96	251.20	57.45	55.57	0.648	0.176	6.8	nd	nd	nd	10.2	70/75	45.06	35.57	66.00	bl
10/10/07	16:08	5303.34	7.78	6.24	7.63	48.60	51.29	49.81	598.80	80.43	78.89	31.02	32.99	6.4%	31.95	290.00	56.95	55.53	0.588	0.093	3.8	nd	nd	nd	27.7	70/75	45.28	36.02	56.09	bl
10/11/07	8:52	5322.08	7.78	6.21	7.65	49.04	50.79	49.58	563.9	81.09	78.79	31.41	32.68	4.0%	31.83	273.00	57.63	55.49	0.699	0.103	3.2	nd	nd	nd	25.1	70/75	45.09	34.72	60.49	bl
10/18/07	9:57	5414.92	7.81	6.27	7.67	48.84	51.15	49.79	532.5	80.94	78.87	31.26	32.93	5.3%	31.98	253.10	57.45	55.54	0.569	0.180	7.6	nd	nd	nd	13.1	70/75	45.06	35.63	58.76	bl
10/02/07	8:40	5244.29	7.88	6.19	7.73	48.83	51.08	49.63	634.20	80.86	78.98	31.30	32.91	5.1%	31.87	307.80	57.37	55.63	0.559	0.055	3.6	nd	nd	nd	12.2	70/75	45.26	34.72	58.75	bv

09/14/07	16:45	5107.14	7.84	6.50	7.65	48.73	51.43	50.00	588.40	81.15	79.23	31.24	33.10	6.0%	32.12	284.70	57.62	55.84	0.447	0.037	3.0	4.6	4.7	1.3	10.5	70/75	45.22	34.92	58.75	bv
09/17/07	14:55	5113.46	7.94	7.21	7.76	48.75	51.46	49.78	666.80	84.89	82.45	31.20	33.09	6.1%	31.97	323.70	60.98	58.72	0.725	0.080	3.1	4.9	4.8	1.4	9.7	70/75	45.06	31.27	53.83	bl
10/04/07	16:10	5296.06	8.00	7.23	7.70	48.72	50.94	49.48	749.90	88.17	85.08	31.19	32.75	5.0%	31.80	365.20	61.16	59.26	0.684	0.094	4.3	nd	nd	nd	5.5	7075	45.09	28.14	60.73	bv
09/18/07	9:20	5131.86	7.98	7.05	7.75	49.02	52.94	50.49	780.30	90.39	88.07	31.42	34.22	8.9%	32.47	380.60	66.02	63.85	0.398	0.074	3.2	4.7	4.9	1.6	7.5	70/75	45.05	27.51	56.27	bl px out tds high.
09/19/07	12:37	5150.4	8.01	7.65	7.84	49.16	51.21	49.91	563.30	80.79	78.97	31.48	32.96	4.7%	32.07	272.70	57.27	55.67	0.754	0.081	4.3	4.7	4.8	1.3	4.6	70/75	53.65	40.84	62.99	bl
09/20/07	9:52	5170.33	7.96	7.14	7.76	48.91	51.19	49.83	563.20	84.88	82.40	31.32	32.96	5.2%	32.01	272.70	61.01	58.74	0.552	0.076	3.6	4.8	4.9	nd	22.7	70/75	53.63	36.18	61.21	bl
09/21/07	11:33	5194.57	7.96	6.85	7.73	48.86	51.39	49.87	633.10	90.52	87.67	31.25	33.11	6.0%	32.02	307.00	66.09	63.46	0.514	0.079	3.6	4.7	4.9	1.4	19.1	70/75	53.58	31.29	60.32	bl
10/17/07	9:15	5392.50	7.83	6.17	7.69	48.91	50.93	49.73	396.6	80.18	79.02	31.28	32.79	4.8%	31.92	190.50	56.75	55.64	1.377	0.201	11.4	nd	nd	nd	16.3	70/75	60.00	46.56	66.00	bl re-run point to avoid FWF water quality is
09/25/07	14:27	5205.27	8.04	7.73	7.86	48.88	51.52	49.81	558.20	80.25	79.21	31.25	33.17	6.1%	31.96	270.10	56.83	55.79	0.865	0.078	3.4	4.6	4.4	1.2	17.6	70/75	60.00	46.05	64.98	bl
10/16/07	14:48	5375.85	7.93	6.61	7.77	48.87	51.76	49.99	470.6	84.56	83.08	31.21	33.36	6.9%	32.09	226.70	60.71	59.31	0.722	0.109	3.6	nd	nd	nd	18.5	70/75	60.00	41.48	66.00	bl re-run point to avoid FWF water quality is
09/26/07	17:05	5212.84	8.07	7.22	7.85	48.73	51.61	49.61	607.80	84.73	83.25	31.17	33.25	6.7%	31.87	295.10	60.73	59.35	0.692	0.054	3.2	4.3	4.3	1.3	16.5	70/75	60.00	40.40	65.23	bv
10/11/07	14:25	5326.13	7.76	6.26	7.64	49.31	52.03	50.26	518.8	90.25	87.35	31.55	33.29	5.5%	32.18	250.50	65.72	63.10	0.944	0.090	3.2	nd	nd	nd	24.5	70/75	60.00	35.70	58.71	bl re-run point to avoid FWF water quality is
10/12/07	9:28	5345.20	7.81	6.16	7.62	48.78	51.61	50.02	492.9	90.08	87.76	31.24	33.30	6.6%	32.14	238.00	65.74	63.58	0.952	0.172	7.2	nd	nd	nd	22.1	70/75	60.00	36.03	66.00	bl re-run point to avoid FWF water quality is
09/27/07	15:55	5221.52	8.05	7.03	7.8	48.74	51.60	49.73	668.50	90.59	88.48	31.23	33.26	6.5%	31.93	324.20	66.16	64.15	0.647	0.054	4.0	4.2	4.2	1.3	15.5	70/75	59.94	34.42	65.46	bv
												Most Affordable Point (MAP) Period																		
10/30/07	15:15	5470.73	7.98	6.89	7.79	48.66	50.51	49.38	533.10	83.31	81.09	30.90	32.38	4.8%	31.59	257.40	59.49	57.36	0.563	0.128	4.6	nd	nd	nd	5.9	70/75	54.17	37.88	62.23	bl
10/31/07	10:33	5488.11	7.91	6.41	7.73	48.78	50.82	49.53	514.10	84.12	81.58	31.23	32.73	4.8%	31.78	248.40	60.28	57.96	0.506	0.117	4.0	4.5	4.5	1.2	22.6	70/75	54.14	37.91	61.22	bl
11/01/07	10:31	5510.30	7.93	6.60	7.75	48.86	51.27	49.78	543.90	84.12	82.01	31.31	33.02	5.5%	31.99	263.20	60.32	58.37	0.38	0.106	3.2	nd	nd	nd	19.7	70/75	53.69	37.59	61.08	bl
11/02/07	10:29	5532.53	8.01	6.95	7.81	48.93	51.37	49.73	551.40	83.85	82.03	31.35	33.11	5.6%	31.95	266.90	60.12	58.41	0.385	0.105	3.2	4.4	4.5	1.3	16.5	70/75	53.70	37.85	60.88	bl
11/06/07	14:17	5556.91	7.94	6.85	7.73	48.87	51.90	50.01	560.80	84.77	82.83	31.53	33.44	6.1%	32.11	271.20	60.89	59.05	0.566	0.1	3.1	nd	nd	nd	13.2	70/75	53.73	37.46	60.04	bl
11/07/07	10:18	5574.92	7.86	6.53	7.68	48.77	51.78	49.76	533.70	84.30	82.41	31.23	33.39	6.9%	31.97	258.10	60.55	58.72	0.482	0.107	3.6	4.3	4.5	1.3	10.5	70/75	53.73	37.65	58.98	bl
11/08/07	9:37	5596.39	7.84	6.41	7.66	48.79	51.20	49.58	506.90	84.34	82.15	31.26	33.03	5.7%	31.82	244.90	60.55	58.51	0.465	0.106	3.2	nd	nd	nd	7.6	70/75	53.73	37.53	59.36	bl
11/09/07	13:30	5621.89	7.85	6.52	7.65	48.47	51.13	49.49	497.90	83.39	81.49	30.92	32.86	6.3%	31.71	240.30	59.63	57.79	0.399	0.099	3.2	nd	4.5	1.2	4.3	70/75	53.85	38.12	59.77	bl
11/12/07	14:43	5626.18	7.92	6.95	7.75	48.37	51.12	49.52	558.30	83.01	81.01	30.85	32.83	6.4%	31.63	269.80	59.29	57.39	0.776	0.113	3.7				24.0	70/75	53.85	38.26	57.76	bl
11/13/07	15:52	5651.33	7.90	6.61	7.71	48.21	51.27	49.31	513.40	82.69	80.98	30.71	32.92	7.2%	31.49	247.70	58.91	57.36	0.523	0.114	3.8				20.9	70/75	53.82	38.75	63.06	bl
11/14/07	10:30	5668.26	7.83	6.39	7.66	48.76	51.40	49.61	497.50	83.09	81.26	31.04	33.04	6.4%	31.77	240.00	59.33	57.64	0.486	0.105	3.2				18.0	70/75	53.82	38.79	60.12	bl
11/15/07	8:34	5668.52	7.76	6.32	7.63	48.97	51.84	50.01	493.30	84.35	82.26	31.38	33.41	6.5%	32.09	238.40	60.54	58.54	0.431	0.103	2.9				15.4	70/75	53.85	38.73	60.55	bl
11/16/07	10:07	5712.33	7.82	6.36	7.64	48.77	51.42	49.57	495.50	83.67	81.79	31.21	33.12	6.1%	31.81	239.30	60.02	58.17	0.398	0.102	2.9				9.6	70/75	53.85	38.32	61.88	bl
												Base Line Test																		
11/19/07	16:15	5719.24	7.93	7.16	7.76	48.94	51.52	49.74	617.20	80.16	78.35	31.30	33.21	6.1%	31.96	299.30	56.77	55.08	0.406	0.11	3.4				8.3	70/75	44.89	36.33	55.32	bl
11/20/07	14:52	5741.85	8.04	7.73	7.85	48.93	51.09	49.62	651.10	80.49	78.41	31.32	32.91	5.1%	31.85	315.90	57.02	55.11	0.456	0.113	3.2				5.6	70/75	44.86	35.33	58.25	bl
11/21/07	10:07	5761.11	7.94	7.35	7.78	48.81	51.08	49.59	626.50	80.01	78.03	31.27	32.91	5.2%	31.84	303.90	56.64	54.78	0.382	0.116	3.9				23.1	70/75	44.88	35.63	61.51	bl
												MAP Average		6.0%		252.74														
												MAP Maximum		7.2%		271.20														
												MAP Minimum		4.8%		238.40														
Hydranautics membranes - SWC5												**Membrane Ripening Period**																		
11/28/07	3:05	5762.47	8.00	8.25	7.81	50.99	53.93	52.26	213.70	84.90	83.20	32.85	34.86	6.1%	33.67	101.30	61.21	59.41	0.934	0.144	5.3				22.3	80/80	44.90	33.98	55.13	jm, hyd memb 1st point
11/29/07	15:25	5772.96	7.93	6.08	7.75	50.94	53.60	52.21	199.70	85.32	82.98	32.65	34.57	5.9%	33.47	94.27	61.36	59.74	0.633	0.077	4.5				20.5	100/100	44.85	33.84	56.12	bv
11/30/07	14:30	5795.87	7.96	6.18	7.8	51.05	53.95	52.25	197.60	85.48	83.48	32.84	34.88	6.2%	33.69	92.93	61.54	59.62	0.473	0.071	4.5				16.5	80/80	44.85	33.81	59.95	bv
12/03/07	16:20	5803.76	7.95	6.20	7.79	51.36	53.57	52.17	212.60	85.45	83.02	33.05	34.62	4.8%	33.70	100.80	61.49	59.34	0.439	0.08	5.1				15.5	80/80	44.88	33.49	56.08	bv
12/04/07	9:35	5821.21	7.89	6.01	7.73	48.73	50.78	49.44	200.10	80.56	78.47	31.19	32.71	4.9%	31.72	94.91	57.16	55.13	0.801	0.082	4.7				12.8	80/80	44.88	33.63	58.67	bl
12/05/07	8:39	5842.23	7.88	5.99	7.74	51.38	53.65	52.13	197.80	85.30	83.08	33.09	34.73	5.0%	33.64	93.81	61.40	59.39	1.683	0.09	6.5				9.3	80/80	44.87	33.68	58.53	bl
12/06/07	9:25	5865.23	7.91	6.01	7.74	51.38	53.69	52.07	200.10	85.11	82.86	33.09	34.73	5.0%	33.61	94.84	61.24	59.19	1.456	0.088	4.5				5.8	80/80	44.86	33.78	58.56	bl
12/07/07	8:43	5886.52	7.81	5.96	7.67	51.51	53.68	52.2	203.2	85.46	83.06	33.18	34.71	4.6%	33.68	96.49	61.60	59.37	0.738	0.072	3.6				22.6	80/80	44.87	33.38	59.43	bl
12/10/07	15:57	5893.98	7.83	5.98	7.66	50.91	53.39	52.05	215.9	85.08	82.79	32.75	34.49	5.3%	33.54	102.30	61.18	59.01	0.535	0.040	2				21.4	80/80	44.88	33.72	56.05	bl
12/11/07	14:55	5916.95	7.81	5.93	7.67	50.81	53.29	52.03	204.8	84.96	82.78	32.66	34.41	5.4%	33.51	96.68	61.02	58.98	0.573	0.048	1.9				17.7	80/80	44.89	33.54	59.24	bl
12/12/07	10:12	5934.55	7.88	6.05	7.71	51.39	53.68	52.23	205.5	85.27	83.05	33.09	34.75	5.0%	33.71	97.41	61.39	59.35	0.235	0.046	2.5				15.1	80/80	44.91	33.69	57.32	bl
12/13/07	9:32	5957.70	7.89	6.07	7.74	51.46	53.69	52.12	202.3	85.61	83.39	33.16	34.76	4.8%	33.64	96.04	61.71	59.66	0.266	0.045	2.4				11.6	80/80	44.93	33.49	59.93	bl
12/14/07	9:03	5979.32	7.87	6.02	7.72	51.56	53.71	52.1	198.7	85.35	82.95	33.26	34.83	4.7%	33.65	94.38	61.55	59.27	0.485	0.051	2.9				8.1	80/80	44.94	33.49	57.81	bl
												12 Point flux and recovery Period																		
01/04/08	10:29	6044.24	7.87	6.11	7.71	51.19	53.58	52.14	243.2	83.41	81.24	32.96	34.66	5.2%	33.65	115.50	59.77	57.73	0.362	0.054	2.8				20.1	70/75	36.13	28.25	57.52	bl
01/08/08	13:39	6073.15	7.86	6.06	7.68	50.82	53.91	52.07	267.7	87.51	83.61	32.70	34.91	6.8%	33.59	127.70	63.43	59.86	2.958	0.049	2.8				16.5	70/75	36.12	25.37	51.67	bl
01/09/08	14:40	6098.28	7.80	6.09	7.60	50.43	53.19	51.44	289.5	91.96	83.57	32.21	34.22	6.2%	33.04	137.70	67.25	59.72	1.820	0.046	2.3				13.9	70/75	22.15	36.13	54.62	bv
01/10/08	9:34	6117.08	7.86	5.94	7.69	51.12	53.16	51.78	196.2	84.59	82.51	32.92	34.42	4.6%	33.41	93.24	60.80	58.86	1.696	0.044	2.3				11.5	70/75	45.35	33.52	62.75	bl
01/11/08	10:39	6140.48	7.83	5.92	7.66	50.92	53.96	51.71	212.7	89.34	87.16	32.78	34.93	6.6%	33.34	100.80	65.06	63.07	1.689	0.049	2.9				8.7	70/75	45.33	30.04	54.59	bl
01/15/08	10:04	6165.01	7.82	5.86	7.61	51.21	53.73	51.78	232.1	94.29	88.75	32.97	34.77	5.5%	33.39	110.30	69.56	64.49	1.622	0.044	2.7				6	70/75	45.35	26.52	57.19	bl
01/16/08	10:36	6187.46	7.82	5.81	7.65	50.96	53.56	51.64	165.7	85.17	83.46	32.79	34.65	5.7%	33.28	78.46	61.34	59.72	1.362	0.049	2.6				13.9	70/75	53.96	39.64	60.84	bl
01/17/08	9:00	6208.13	7.85	5.82	7.68	51.36	53.93	51.89	169.9	90.43	87.75	33.10	34.94	5.6%	33.51	80.77	66.14	63.61	1.789	0.051	2.7				11.2	70/75	54.06	34.92	58.45	bl
01/18/08	9:45	6229.53	7.79	5.79	7.60	51.11	53.99	51.76	182.5	95.49	91.59	32.90	34.93	6.2%	33.38	86.22	70.66	67.08	2.419	0.050	2.7				8.7	70/75	54.05	30.76	57.09	bl

Quarterly Technical Progress Report
Covering Period January 1, 2008 to March 31, 2008
Date of Report 4-28-08

Agreement Number:	4600007440
DWR ID Number:	n/a
Project Title:	Optimizing Seawater Reverse Osmosis for Affordable Desalination
Recipient Organization:	Affordable Desalination Collaboration 2419 E. Harbor Blvd, #173 Ventura, CA 93001
Partners:	See attached membership list.
Contact Person:	John MacHarg 2419 E. Harbor Blvd, #173 Ventura, CA 93001 Tel: 650-283-7976 Fax: 805-658-8060 e-mail: jmacharg@affordabledesal.com
Date Submitted:	4-28-08

_____
Signed, Reviewed by designated representative

1. **Project Objective:** The objectives of the Affordable Desalination Collaboration (ADC) are to demonstrate affordable, reliable and environmentally responsible reverse osmosis desalination technologies and to provide a platform by which cutting edge technologies can be tested and measured for their ability to reduce the overall cost of the seawater reverse osmosis (SWRO) treatment process.

2. **Project Description / Background:** A key challenge facing the seawater desalination industry today is to develop a new generation of reverse osmosis (RO) plants that deliver high-quality, fresh water at a reduced economic and environmental cost. The key to achieving these goals is to address the most expensive and environmentally taxing component of operating a desalination system: energy.

   The ADC was formed in 2004 to fund and execute the first part of a multiple phase Affordable Desalination Demonstration Project. The ADC members are a group of leading government agencies, municipalities, RO manufacturers,

consultants and professionals partnering together to help reduce the costs associated with desalination.

The first phase of the project, ADC I, built and operated a demonstration plant at the United States Navy's Seawater Desalination Test Facility in Pt. Hueneme, California. The plant utilized a combination of proven technologies developed primarily in the U.S. and California to demonstrate that seawater desalination can be optimized to make it technically and economically viable. ADC I achieved remarkable results by desalinating seawater at energy levels between 6.0-6.9 kWh/kgal (1960-2250 kWh/acre-ft). On average, these numbers make the power for desalination comparable to the power required for the State Water and the Colorado River Aqueduct projects and they are approximately 35% lower than experts had been projecting for seawater desalination. For the approximate 100 mgd of proposed seawater desalination projects in Southern California alone, this 35% savings equates to approximately 140,000 Mega Watt hours in energy savings per year.

This second phase (ADC II) will pursue the following demonstration, and development programs.

a. Test and demonstrate additional manufacturers' membranes through a protocol similar to Phase I.
b. Test and demonstrate DOW FILMTEC's next generation "hybrid-membrane".
c. Develop and demonstrate new process designs that are possible as a result of the isobaric energy recovery technologies. We will use the ADC pilot system to test and demonstrate these new flow schemes in order to push the recoveries above 50%, while still maintaining good water quality and low energy performance.
d. Test and demonstrate ZENON ultra-filtration technology ahead of our ADC pilot system. This portion of the test should build on and compliment the other pre-filtration studies that are taking place in the region.
e. Test and demonstrate Ocean Pacific Technology's (OPT) Axial Piston Pressure Exchanger (AP^2X) pump technology.

Thus far we have completed the first three sets of manufacturers' membrane testing that including the Toray TM800C membrane test (Task 2), the Koch 2822HF-400 membrane test (Task 3) and the Hydranautics SWC5 membrane (Task 4). In addition we have also completed the installation of the ZENON pre-filtration skid and will complete the start up of the ZENON skid equipment in Q2-2008.

- Start Date of Contract: April 2, 2007
- End Date of Contract: December 22, 2008

3. Progress and Status:

The first quarter of 2008 was mostly spent proceeding through the test protocol with minimal delay. We completed the Hydranuatics Membrane Task 4 test on 2-22-08. We then changed over to the DOW FILMTEC Hybrid Membranes Task 5 test and began the test protocol for the FILMTEC Hybrid set on 2-27-08. We had completed the Hybrid ripening period of the test protocol by 3-18-08. The complete data set for ADC II results is attached.

A table comparing the most affordable points of all the membranes tested thus far including 3 sets of FILMTEC (tested in ADC I), Toray, Koch and Hydranautics is provided below.

Manufacturer's Comparison of the Most Affordable Points (PRELIMINARY)

Mfgr	Rec %	Flux gfd	RO Process kWh/m3 (kWh/kgal)	TDS mg/l	Boron mg/l	Total Treatment Costs $/kgal (3)	Temp ºF	Feed ktds
FILMTEC (1) SW30HR-380	50.0	9.0	2.23 (8.43	107	0.57	$ 796	64	32.02
FILMTEC (1) SW30XLE-400i	50.0	9.0	1.91 (7.22)	210	1.04	$ 772	56	32.01
FILMTEC (1) SW30HRLE-400i	48.0	6.0	1.87 (7.07)	188	0.95	$ 810	57	32.06
Toray TM800C (2)	49.7	9.0	1.98 (7.48)	185	0.79	$ 792	65	32.39
Koch TFC 2822HF-400 (2)	45.8	9.0	1.86 (7.03)	273	1.27	$ 785	62	32.01
Hydranautics SWC5 (2)	45.6	9.01	1.95 (7.38)	87	0.70	$ 795	56	33.02

Notes: 1. Data from ADC I test where FILMTEC membranes were used exclusively. 2. Preliminary results. 3. Cost of water from various manufactures is from various NPV model revisions and will need to be reconciled to a final NPV model upon completion of the project. Therefore the above Total Treatment Costs are not exactly "apples to apples" comparisons.

The Zenon advanced filtration system has been delivered, installed and should be put on line by early May-08.

4. Percent Complete of Total Project: ~ 32 %

5. Deliverables:

Trade Show/Conference/Publication	Date(s)	Author(s)	Presenter	DWR Submittal
IDA World Conference, Gran Canaria, ADC II Update	October 21-26, 2007	Stephen Dundorf, Thomas F. Seacord, John MacHarg	Stephen Dundorf	Q3-07
Desalination and Water Reuse (DWR) Quarterly, Innovative Designs to be Tested in ADC II	Aug/Sept-07	John P. MacHarg	n/a	Q3-07
AMTA 2007 Annual Conference, Las Vegas, ADC I 10 mgd Application	July 23-27, 2007	Bradley Sessions, Tom Seacord, P.E.	Tom Seacord	Q2-07
AWWA Membrane Technology Conference, Tampa Florida, Collier County results	March 18-21, 2007	Brandon Yallaly, P.E., Tom Seacord, P.E., Steve Messner	Brandon Yallaly	Q2-07
ADC Completes Profile of SWRO Press Release	March 28, 2008	ADC	n/a	Q1-08

In addition to the above papers and presentations, the ADC is planning to hold a joint workshop with the American Membrane Technology Association (AMTA) at the joint AMTA-SEDA Conference, July 14, 2008 in Naples, Florida. The primary purpose of this workshop will be to present the results from our membrane testing (ADC I plus Tasks 2-5).

6. Expenditures:

Affordable Desalination Collorboration
State of California Water Board Report
Quarter ending March 31, 2008

	Budgetary Category	Balances December 31, 2007			Q 1 Expenditures			Balances March 31, 2008		
		Non State Share	State Share (Grant)	Total Project Costs	Non State Share	State Share (Grant)	Total Project Costs	Non State Share	State Share (Grant)	Total Project Costs
	(I)	(II)	(III)	(IV) = (II+III)	(II)	(III)	(IV) = (II+III)	(II)	(III)	(IV) = (II+III)
(a)	Administration									
	Salaries, wages	$ -	$ 145,113	$ 145,113		$ 28,500	$ 28,500	$ -	$ 116,613	$ 116,613
	Fringe benefits	$ -	$ 30,780	$ 30,780		$ 10,750	$ 10,750	$ -	$ 20,030	$ 20,030
	Supplies	$ -	$ 39,131	$ 39,131			$ -	$ -	$ 39,131	$ 39,131
	Equipment	$ -	$ 6,000	$ 6,000			$ -	$ -	$ 6,000	$ 6,000
	Consulting services	$ 22,500	$ 47,000	$ 69,500			$ -	$ 22,500	$ 47,000	$ 69,500
	Travel	$ -	$ 13,735	$ 13,735			$ -	$ -	$ 13,735	$ 13,735
(b)	Planning/design/engineering	$ (5,500)	$ 14,404	$ 8,904	$ 5,000		$ 5,000	$ (10,500)	$ 14,404	$ 3,904
(c)	Equipment purchases/Rentals/Rebates/Vouchers	$ 147,100	$ 19,000	$ 166,100	$ 17,850		$ 17,850	$ 129,250	$ 19,000	$ 148,250
(d)	Materials/Installation/Implementation	$ 69,000	$ 18,681	$ 87,681		$ 6,778	$ 6,778	$ 69,000	$ 11,903	$ 80,903
(e)	Implementation verification	$ 7,500	$ 8,000	$ 15,500			$ -	$ 7,500	$ 8,000	$ 15,500
(f)	Project legal/License/Insurance fees	$ -	$ 45,000	$ 45,000			$ -	$ -	$ 45,000	$ 45,000
(g)	Structures	$ -	$ -	$ -			$ -	$ -	$ -	$ -
(h)	Land Purchase/Easement	$ -	$ -	$ -			$ -	$ -	$ -	$ -
(i)	Environmental Compliance/Mitigation/Enhancement	$ -	$ -	$ -			$ -	$ -	$ -	$ -
(j)	Construction	$ -	$ -	$ -			$ -	$ -	$ -	$ -
(k)	Other (Operating Cash)	$ 335,000	$ -	$ 335,000			$ -	$ 335,000	$ -	$ 335,000
(l)	Operation, monitoring and assessment	$ -	$ 199,268	$ 199,268		$ 38,800	$ 38,800	$ -	$ 160,469	$ 160,469
(m)	Report preparation	$ 2,000	$ 2,500	$ 4,500			$ -	$ 2,000	$ 2,500	$ 4,500
(n)	Outreach and information sharing	$ 104,610	$ -	$ 104,610	$ 18,674		$ 18,674	$ 85,936	$ -	$ 85,936
(o)	Subtotal	$ 682,210	$ 588,612	$ 1,270,822	$ 41,524	$ 84,828	$ 126,352	$ 640,686	$ 503,784	$ 1,144,470
(p)	Overhead (8%)		$ 143,385	$ 143,385		$ 6,786	$ 6,786		$ 136,599	$ 136,599
(q)	Contingency (10%)		$ 30,379	$ 30,379		$ -			$ 30,379	$ 30,379
(r)	Total (o+p+q)	$ 682,210	$ 762,376	$ 1,444,586	$ 41,524	$ 91,614	$ 133,138	$ 640,686	$ 670,762	$ 1,311,448

7. **Schedule Status:** Now that the Zenon system is installed and very near start up, we are in line with our original schedule. Furthermore, since we have been operating significantly under budget, we have proposed and received preliminary approval to add several tasks to the project and run through the end of 2009. Please refer to the revised task list and schedule for details on these additional items.

8. **Plans for Next Quarter:** Q2-08 should see the start up of the Zenon 1000 system (Task 1), completion of the DOW Hybrid membrane demonstration (Task 5) and commencement and possible completion of the Toray TM800C re-test.

9. **Attachments:** n/a

All quarterly reports should be publicly disclosable and not contain confidential, proprietary or business sensitive information.

Task and % Complete Progress Table

Agreement Number	Starting Date:	Completion Date:	Quarter-Year	Report Number	PERCENT OF
4600007440	4.2.07	11.19.09	Q1-2008	4	
Grantee Agency Name: Affordable Desalination Collaboration		% Time Elapsed 35%	Total Grant Funds used $ 237,624	Grant funds this Quarter $ 74,873	
Name of Project: Optimizing Seawater Reverse Osmosis for Affordable Desalination					

TASKS	YEAR	2007		2008				Project	Task Complete Last Report	Task Complete This Report	Project Complete
	MONTH	Qtr 3	Qtr 4	Qtr 1	Qtr 2	Qtr 3	Qtr 4				
Task 1: Zenon 1000 pilot demonstration								12	5	0	1
Task 2: Toray low energy membrane demonstration			Complete					8	0	0	8
Task 3: Koch low energy membrane demonstration				Complete				12	40	0	12
Task 4: Hydranautics low energy membrane demonstration					Complete			8	40	60	8
Task 5: Dow-FILMTEC hybrid membrane demonstration								8	0	40	3
Task 6: TorayTM800C low energy membrane demonstration (re-test)								8	0	0	0
Task 7: DOW FILMTEC high Boron rejection memb. demonstration								8	0	0	0
Task 8: Koch high rejection memb. demonstration								8	0	0	0
Task 9: Unbalanced PX high recovery testing								10	0	0	0
Task 10: Interstage-PX hybrid high recovery testing								10	0	0	0
Task 11: Demonstrate OPT's APX pump and energy recovery system								8	0	0	0
Show Progress by Use of Bar Chart	**Scheduled =**							100			
	Completed =										32

Notse: 1. Since we have been operating significantly under budget, we have proposed (2/10/08) and received preliminary approval to add tasks 6, 7, 8, and 11 to the task list. These additional items will extend the project schedule from the current December 2008 end date through Nov- 2009. The additional tasks and subsequent extension to the schedule will not result in an increase to the State Share/grant ie. no cost extension.

Schedule

Proposed/Draft Project Schedule

ID	Task Name	Duration	Start	Finish
1	Agreement development	168 days	Tue 8/1/06	Thu 3/22/07
2	Final agreement signed	5 days	Fri 3/23/07	Thu 3/29/07
3	Project begins	1 day	Mon 4/2/07	Mon 4/2/07
4	**TorayTM800C low energy membrane demonstration**	**51 days**	**Mon 4/30/07**	**Mon 7/9/07**
5	Install Toray TM800C Membranes	2 days	Mon 4/30/07	Tue 5/1/07
6	TM800C Ripening period	15 days	Wed 5/2/07	Tue 5/22/07
7	TM800C 9 flux and recovery points	18 days	Wed 5/23/07	Fri 6/15/07
8	TM800C Most affordable point	15 days	Mon 6/18/07	Fri 7/6/07
9	Complete Toray TM800C testing	1 day	Mon 7/9/07	Mon 7/9/07
10	Submit project update report to DWR	5 days	Mon 7/9/07	Fri 7/13/07
11	**Koch low energy membrane demonstration**	**88 days**	**Tue 7/10/07**	**Thu 11/8/07**
12	Install membranes	2 days	Tue 7/10/07	Wed 7/11/07
13	Ripening period	20 days	Thu 7/12/07	Wed 8/8/07
14	9 flux and recovery points	30 days	Thu 8/9/07	Wed 9/19/07
15	Most affordable point	35 days	Thu 9/20/07	Wed 11/7/07
16	Complete Koch testing	1 day	Thu 11/8/07	Thu 11/8/07
17	Submit project update report to DWR	5 days	Mon 9/17/07	Fri 9/21/07
18	Innovative PX flow schemes work shop	2 days	Thu 11/8/07	Fri 11/9/07
19	**Hydranautics low energy membrane demonstration**	**78 days**	**Fri 11/9/07**	**Tue 2/26/08**
20	Install membranes	2 days	Fri 11/9/07	Mon 11/12/07
21	Ripening period	20 days	Tue 11/13/07	Mon 12/10/07
22	9 flux and recovery points	25 days	Tue 12/11/07	Mon 1/14/08
23	Most affordable point	30 days	Tue 1/15/08	Mon 2/25/08
24	Complete Hydranautics testing	1 day	Tue 2/26/08	Tue 2/26/08
25	Submit project update report to DWR	4 days	Mon 1/21/08	Thu 1/24/08
26	**Zenon 1000 Pilot Demonstration**	**281 days**	**Mon 3/3/08**	**Mon 3/30/09**
27	Install and test Zenon System	18 days	Mon 3/3/08	Wed 3/26/08
28	Operate and monitor Zenon 1000 membrane pilot system	262 days	Thu 3/27/08	Fri 3/27/09
29	Complete Zenon testing	1 day	Mon 3/30/09	Mon 3/30/09
30	Submit project update report to DWR	4 days	Mon 3/17/08	Thu 3/20/08
31	**DOW Hybrid Membrane Demonstration**	**49 days**	**Wed 2/27/08**	**Mon 5/5/08**
32	Install DOW hybrid membranes	2 days	Wed 2/27/08	Thu 2/28/08
33	DOW Hybrid Ripening period	15 days	Wed 2/27/08	Tue 3/18/08
34	DOW Hybrid 9 flux and recovery points	18 days	Wed 3/19/08	Fri 4/11/08
35	DOW Hybrid Most affordable point	15 days	Mon 4/14/08	Fri 5/2/08
36	Complete DOW testing	1 day	Mon 5/5/08	Mon 5/5/08
37	Submit project update report to DWR	4 days	Mon 6/16/08	Thu 6/19/08
38	***TorayTM800C low energy membrane demonstration (re-test)***	***51 days***	***Tue 5/6/08***	***Tue 7/15/08***
39	***Install Toray TM800C Membranes***	***2 days***	***Tue 5/6/08***	***Wed 5/7/08***
40	***TM800C Ripening period***	***15 days***	***Thu 5/8/08***	***Wed 5/28/08***
41	***TM800C 12 flux and recovery points***	***18 days***	***Thu 5/29/08***	***Mon 6/23/08***
42	***TM800C Most affordable point***	***15 days***	***Tue 6/24/08***	***Mon 7/14/08***
43	***Complete Toray TM800C testing***	***1 day***	***Tue 7/15/08***	***Tue 7/15/08***

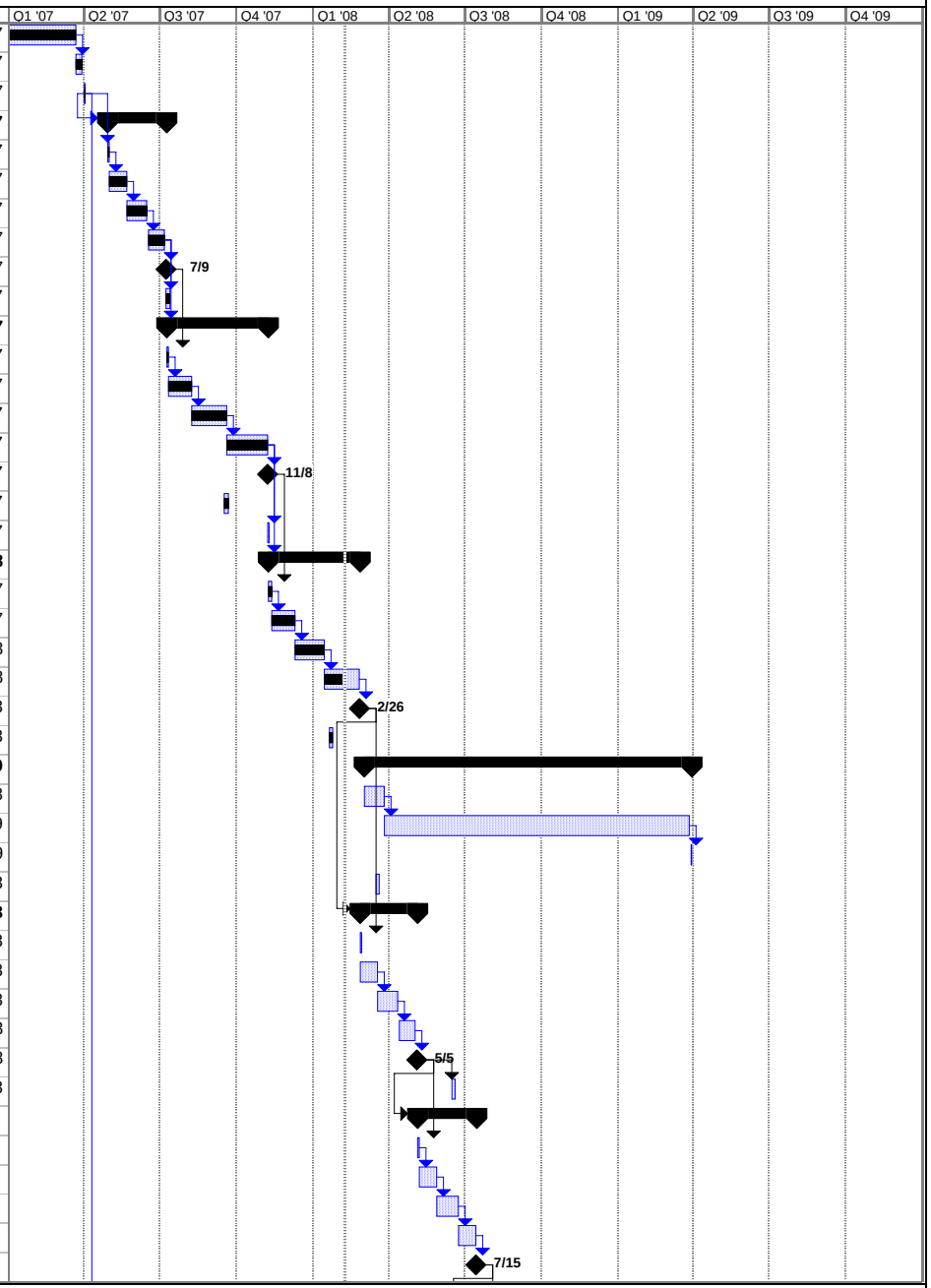

Project: ADC Proposed Project Schedu
Date: Thu 2/7/08

Task		Summary		Rolled Up Progress		Project Summary	
Progress		Rolled Up Task		Split		Group By Summary	
Milestone		Rolled Up Milestone		External Tasks		Deadline	

Proposed/Draft Project Schedule

ID	Task Name	Duration	Start	Finish
44	***DOW FILMTEC high Boron rejection memb. demonstration***	***51 days***	***Wed 7/16/08***	***Wed 9/24/08***
45	***Install DOW FILMTEC SW30XHR-400i Membranes***	***2 days***	***Wed 7/16/08***	***Thu 7/17/08***
46	***DOW FILMTEC SW30XHR-400 Ripening period***	***15 days***	***Fri 7/18/08***	***Thu 8/7/08***
47	***DOW FILMTEC SW30XHR-400 12 flux and recovery points***	***18 days***	***Fri 8/8/08***	***Tue 9/2/08***
48	***DOW FILMTEC SW30XHR-400 Most affordable point***	***15 days***	***Wed 9/3/08***	***Tue 9/23/08***
49	***Complete FILMTEC SW30XHR-400 testing***	***1 day***	***Wed 9/24/08***	***Wed 9/24/08***
50	Submit project update report to DWR	4 days	Fri 8/15/08	Wed 8/20/08
51	ADC-AMTA Member workshop and progress report	1 day	Mon 7/14/08	Mon 7/14/08
52	***Koch high rejection memb. demonstration***	***51 days***	***Thu 9/25/08***	***Thu 12/4/08***
53	***Install Koch Membranes***	***2 days***	***Thu 9/25/08***	***Fri 9/26/08***
54	***Koch Ripening period***	***15 days***	***Mon 9/29/08***	***Fri 10/17/08***
55	***Koch 12 flux and recovery points***	***18 days***	***Mon 10/20/08***	***Wed 11/12/08***
56	***Koch Most affordable point***	***15 days***	***Thu 11/13/08***	***Wed 12/3/08***
57	***Complete Koch testing***	***1 day***	***Thu 12/4/08***	***Thu 12/4/08***
58	Order long lead interstage-PX hybrid items	45 days	Fri 12/5/08	Thu 2/5/09
59	Submit project update report to DWR	4 days	Thu 1/15/09	Tue 1/20/09
60	**Unbalanced PX high recovery testing**	**76 days**	**Fri 12/5/08**	**Fri 3/20/09**
61	Install PX flow scheme membrane set	2 days	Fri 12/5/08	Mon 12/8/08
62	Flush and base line membranes	10 days	Tue 12/9/08	Mon 12/22/08
63	Execute unbalance test protocol @ 9 points	18 days	Tue 12/23/08	Thu 1/15/09
64	PX unbalanced most affordable point (24/7 for 2 months)	45 days	Fri 1/16/09	Thu 3/19/09
65	Clean membranes	2 days	Fri 2/13/09	Mon 2/16/09
66	Complete Unbalanced PX testing	1 day	Fri 3/20/09	Fri 3/20/09
67	Submit project update report to DWR	4 days	Mon 3/16/09	Thu 3/19/09
68	**Interstage-PX hybrid high recovery testing**	**86 days?**	**Fri 3/20/09**	**Fri 7/17/09**
69	Reconfigure system for Interstage-PX hybrid design	10 days	Fri 3/20/09	Thu 4/2/09
70	Execute interstage-PX hybrid protocol 18 points	30 days	Fri 4/3/09	Thu 5/14/09
71	Interstage-PX hybrid most affordable point (24/7 for 2 months)	45 days	Fri 5/15/09	Thu 7/16/09
72	Clean membranes	2 days	Fri 6/12/09	Mon 6/15/09
73	Complete Interstage-PX Hybrid testing	1 day?	Fri 7/17/09	Fri 7/17/09
74	Submit project update report to DWR	4 days	Mon 6/15/09	Thu 6/18/09
75	***Demonstrate OPT's APX pump and energy recovery system***	***55 days***	***Mon 7/20/09***	***Fri 10/2/09***
76	***Reconfigure system with APX pump and ER unit***	***10 days***	***Mon 7/20/09***	***Fri 7/31/09***
77	***Operate system through 40 hour "break-in" period***	***5 days***	***Mon 8/3/09***	***Fri 8/7/09***
78	***Demonstrate APX technology 24/5 for cumulative 500 hrs***	***25 days***	***Mon 8/10/09***	***Fri 9/11/09***
79	***Complete APX demonstration***	***15 days***	***Mon 9/14/09***	***Fri 10/2/09***
80	Submit project update report to DWR	4 days	Mon 8/17/09	Thu 8/20/09
81	Complete ADC Prop 50 testing	1 day	Mon 10/5/09	Mon 10/5/09
82	Write final report	30 days	Mon 10/5/09	Fri 11/13/09
83	Submit final report, billing, conclude project	2 days	Mon 11/16/09	Tue 11/17/09
84	Member/general workshop and publish results	2 days	Wed 11/18/09	Thu 11/19/09
85	Project Duration	688 days	Tue 4/3/07	Thu 11/19/09

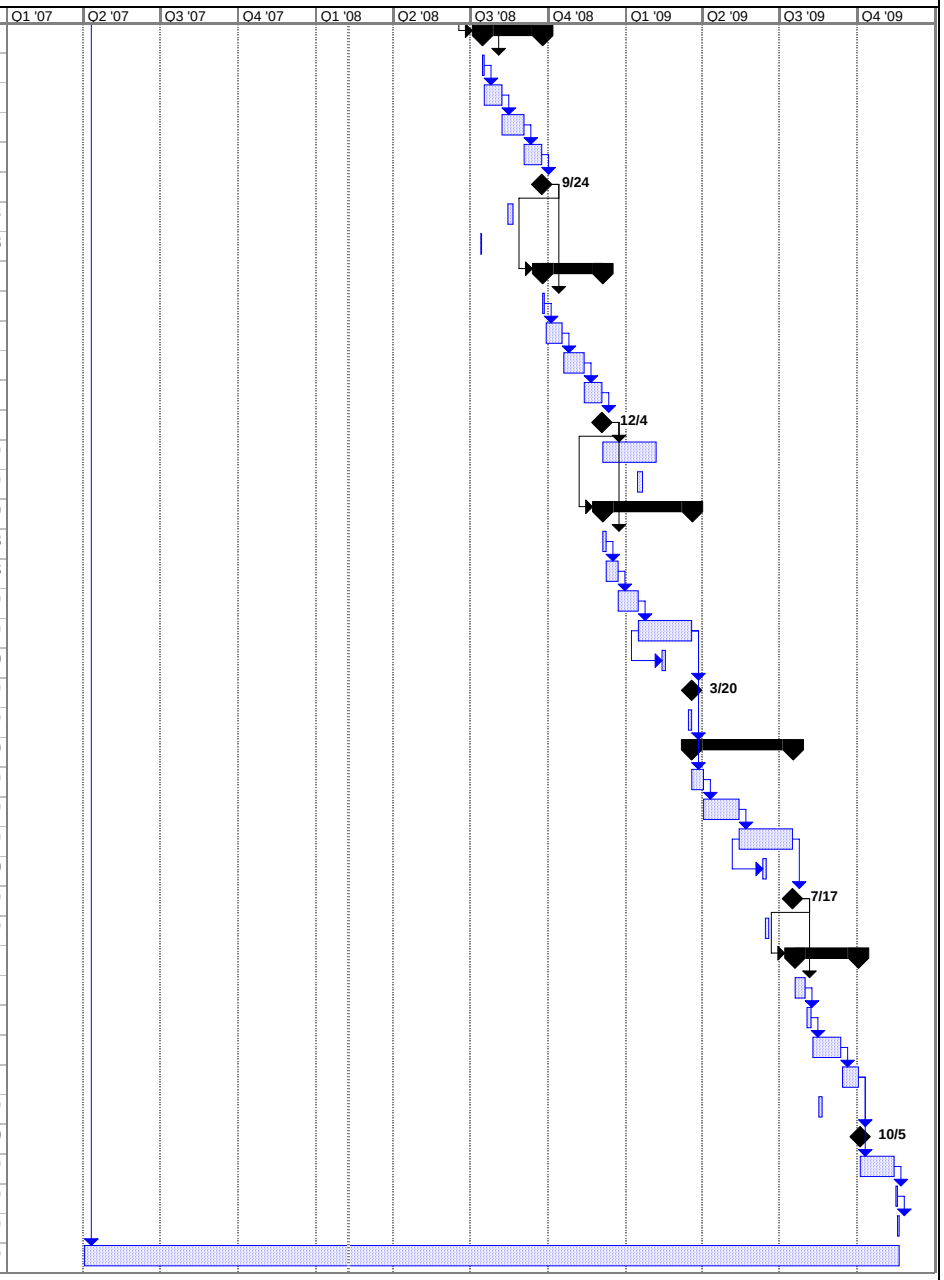

Project: ADC Proposed Project Schedu
Date: Thu 2/7/08

Task		Summary		Rolled Up Progress		Project Summary	
Progress		Rolled Up Task		Split		Group By Summary	
Milestone		Rolled Up Milestone		External Tasks		Deadline	

Attachments

1. ADC Completes Profile of SWRO Press Release
2. Water Quality, Flow and Pressure and Power Data

Affordable Desalination Profiles State of the Art SWRO March 27, 2008

Ventura, CA *(March 27, 2008)* – The Affordable Desalination Collaboration (ADC) has completed a major milestone in their test program that profiles the state of the art performance for seawater reverse osmosis (SWRO) technology. This testing ran over two years and involved operating six sets of standard 8" diameter membranes in seven element pressure vessels including the, FILMTEC SW30HR-380, SW30XLE-400i, SW30HRLE-400i, Toray TM800-400, Koch 400 and Hydranautics SWC5. All other associated equipment and designs used in these tests also represented state of the art, off the shelf technology. Key system variables of recovery and flux ranged from 43-50% and 6-10 gallons per day per square foot of membrane (gfd). The testing provides a body of data that can be used to define and project the performance of state of the art SWRO for Southern California applications as well as a bench mark for the performance of new technologies and designs.

Table 1. ADC Power Consumption and System Projections

	kWh/kgal over various system capacities				
Treatment Step	ADC Record	ADC MAP	0.3 mgd(2)	10 mgd(2)	50 mgd(2)
RO Process	6.0*	7.6 (1)	10.5	8.6	7.6
Intake (2)	2.48	2.19	2.01	1.74	1.72
Pre-filtration (2)	1.30	1.15	1.06	0.91	0.90
Permeate treatment (2)	0.25	0.25	0.23	0.17	0.16
Permeate distribution (2)	1.27	1.27	1.17	0.86	0.85
Total Treatment	11.3	12.4	15.0	12.3	11.3

1. Most Affordable Point (MAP) average value from 6 membrane tests. 2. Projected values based on typical parameters and conditions. 3. * actual ADC operating conditions.

Table 1 shows that the record low specific process power achieved for SWRO was 6.0 kWh/kgal and the average MAP was 7.6 kWh/kgal. It also provides projections for the power consumption of various sized systems up to 50 million gallons per day (mgd) and some associated projected treatment requirements for full scale operation.

Table 2. ADC Operating Parameters and Performance

Process Variables	(*)	(1)	(1)	(1)	(1)
System capacity, mgd	0.05	0.08	0.3	10	50
RO feed pressure, psi	675	885	885	885	885
Flux, gfd	6.0	9.0	9.0	9.0	9.0
RO recovery, %	42%	48%	48%	48%	48%
Permeate quality, TDS	312	156	156	156	156
Permeate Boron, mg/l	1.0	0.8	0.8	0.8	0.8
Raw water, TDS	31,570	31,742	31,742	31,742	31,742
Raw water temperature, ºF	59	60	60	60	60

Pounds per square inch (psi), Total dissolved solids (TDS), milligrams per liter (mg/l)

Table 2 provides figures on the associated key system parameters and performance from the ADC pilot with these values also projected over various system capacities. According to the ADC's 50 mgd net present value model (see Data page on ADC web site for the NPV model details), the projected cost of water over the 6 MAP's ranged from $2.37-2.47/kgal with an average of $2.43/kgal.

The ADC's mission is to demonstrate affordable, reliable and environmentally responsible reverse osmosis desalination technologies and to provide a platform by which cutting edge technologies can be tested and measured for their ability to reduce the overall cost of the SWRO treatment process. The graph below compares results from the ADC's data projected against the energy consumption of other sources of water for Southern California. These results are now being used as the base line to plan for projects such as West Basin Municipal Water District's 20 MGD ocean desalination facility. Our results demonstrate that SWRO can be competitive with other traditional sources of water in Southern California.

Energy Requirements for Various Water Supplies and the ADC

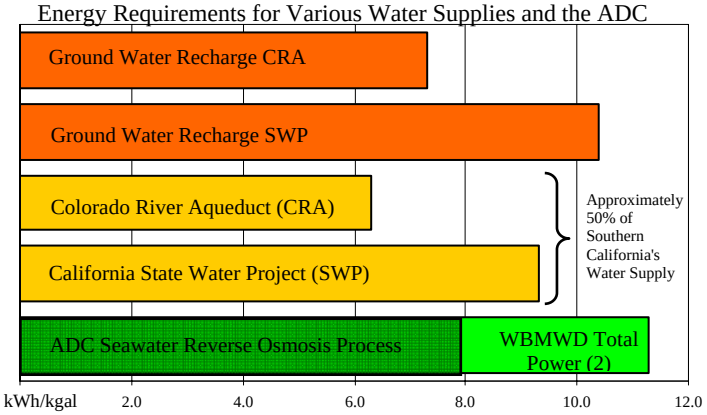

1. ADC Seawater Reverse Osmosis Process power is from the ADC's demonstration facility at the "most affordable point" and for the SWRO process only. This includes the power of the main HP pump and PX booster pump only with no allowance for intake, pre-filtration, conveyance or distribution. 2. WBMWD Total Power includes intake, pre-filtration, SWRO Process, conveyance and distribution power for their proposed 20 MGD ocean desalination facility.

The ADC is a non-profit organization comprised of the following group of leading companies, state and government agencies:

- California Department of Water Resources
- California Energy Commission
- Carollo Engineers
- City of Santa Cruz Water Department
- Energy Recovery, Inc.
- FilmTec Corporation
- GE Zenon
- Hydranautics – A Nitto Denko Company
- Koch Membranes
- Metropolitan Water District of Southern California
- Naval Facilities Engineering Service Center
- Pentair Water Treatment-CodeLine Division
- Poseidon Resources
- Sandia National Laboratories
- Toray Membranes
- U.S. Bureau of Reclamation
- West Basin Municipal Water District

For information please contact John MacHarg, Managing Director
Tel# 650-283-7976, e-mail: jmacharg@affordabledesal.com
Web: www.affordabledesal.com

TIME			CALCULATED PARAMETERS			TEMP	PRESSURES										FLOWS				MAIN PANEL KW METER				VFD KW METER			
		Operation	RO	Flux	Power		P_{MF-in}	P_{MF-out}	P_{CF-in}	P_{CF-out}	$P_{PX-Feed\ In}$	$P_{PX-conc\ out}$	$P_{PX-boost\ suct}$	P_{F-SYS}	P_{C-SYS}	P_{P-SYS}	$Q_{F-HP\ Pump}$	$Q_{PX\ Pump}$	$Q_{Feed\ PX-In}$	Q_{P-SYS}	A_{sys}	P HP/PX	P booster	Power	PX power	HP Power	Feed Pump	
Date	Time	Time	Recovery %	Gfd	kWh/m3	Influent	(psi)	(psi)	(psi)	(psi)	(psi)	(psi)	(psi)	(psi)	(psi)	(psi)	(gpm)	(gpm)	(gpm)	(gpm)	amp	(kw)	(kw)	Factor	(kw)	(kw)	(kw)	Notes
MM/DD/YY	hh:mm	hh.hh				Temp F	1	2	3	4	5	6	7	8	9	10	11	12	13	14	15	16	17	18	19	20	21	
Toray membranes - TM800-400										**Membrane Ripening Period**																		
5/30/2007	11:15	4151.28	42.3%	7.47	1.90	57.0	51.2	39.4	38.8	33.9	34.7	27.7	800	818	808	2.9	44.0	57.95	59.56	43.6	25.00	18.85	nd	0.900	0.90	17.00	5.00	
6/5/2007	11:30	4198.44	43.0%	7.46	1.87	58.0	51.2	38.4	37.8	32.9	34.0	27.1	790	807	798	2.5	44.0	57.60	57.60	43.5	24.50	18.48	nd	0.900	0.85	16.50	4.95	
6/6/2007	10:15	4218.73	42.6%	7.47	1.90	58.0	51.1	40.5	39.8	38.6	35.6	28.6	790	807	800	2.7	44.0	58.24	58.75	43.6	24.40	18.80	nd	0.900	0.85	16.50	4.93	bl
6/7/2007	9:25	4239.52	42.6%	7.46	1.87	58.0	51.2	40.7	40.0	38.8	33.7	27.1	795	815	802	2.5	43.5	57.80	58.70	43.5	24.40	18.50	nd	0.900	0.85	16.60	4.93	bl
6/11/2007	11:45	4256.49	43.1%	7.49	1.84	59.8	51.0	43.8	43.3	36.5	36.0	30.0	785	800	790	2.8	41.2	57.53	57.75	43.7	24.00	18.22	nd	0.898	0.90	16.30	4.90	jm
6/12/2007	9:30	4278.07	42.5%	7.47	1.87	60.0	51.0	22.4	21.9	20.5	15.5	9.7	780	795	785	2.5	42.5	57.50	59.10	43.6	24.50	18.55	nd	0.898	0.90	16.60	4.91	bl
6/13/2007	11:45	4299.24	42.7%	7.49	1.84	61.0	50.5	29.0	28.0	23.8	23.0	15.0	780	800	790	2.4	43.0	57.47	58.76	43.7	24.50	18.24	nd	0.900	0.90	16.30	4.95	bv
6/14/2007	9:00	4316.67	42.8%	7.47	1.82	62.0	50.8	39.0	38.0	32.5	32.0	25.5	770	795	790	2.4	43.5	57.66	58.32	43.6	23.80	18.06	nd	0.899	0.90	16.30	4.95	bv
										12 Point flux and Recovery Period																		
6/19/2007	10:12	4341.84	42.5%	6.00	1.71	62.0	53.9	42.3	42.0	40.9	39.8	34.7	735	745	742	2.2	35.5	45.70	47.27	35.0	19.75	13.57	nd	0.842	0.50	12.10	4.65	bl
6/20/2007	10:10	4364.19	46.4%	6.00	1.78	61.5	54.0	44.2	43.9	43.0	41.9	38.4	780	790	785	1.3	32.8	39.68	40.39	35.0	19.80	14.15	nd	0.840	0.35	12.60	4.55	bl px out tds high. re-run point on 6-21
06/21/07	9:45	4386.12	47.0%	5.98	1.77	60.5	54.4	47.8	47.3	46.2	45.0	40.9	775	782	778	1.2	35.5	39.43	44.53	34.9	19.75	14.05	nd	0.845	0.29	12.60	4.59	bl Unbalanced PX to compensate low flo
06/22/07	10:20	4410.71	50.1%	5.98	1.85	62.0	54.5	39.5	39.0	38.1	36.9	33.3	808	819	815	0.9	36.0	34.71	40.95	34.9	20.44	14.68	nd	0.862	0.29	13.50	4.55	bl Unbalanced PX to compensate low flo
06/26/07	10:20	4432.57	41.8%	7.47	1.82	63.0	50.4	32.9	32.1	30.2	27.4	19.0	759	779	770	1.9	44.5	59.28	60.74	43.6	23.85	18.01	nd	0.900	0.95	15.19	4.95	bl
06/27/07	9:50	4454.19	45.8%	7.47	1.87	64.0	52.0	36.9	36.1	34.5	33.0	27.4	804	819	811	1.9	44.5	50.18	51.65	43.6	23.25	18.51	nd	0.902	0.61	16.90	4.83	bl
06/28/07	9:10	4475.80	49.4%	7.42	1.92	64.5	52.8	39.1	38.5	37.0	33.5	29.1	835	847	840	1.9	44.0	44.31	47.23	43.3	24.73	18.84	nd	0.902	0.48	17.35	4.75	bl Unbalanced PX to compensate low flo
06/29/07	9:55	4497.25	43.3%	8.91	1.95	65.0	47.5	29.5	28.3	25.8	23.8	14.1	805	832	819	3.1	51.5	68.02	68.10	52.0	29.92	23.04	nd	0.921	1.37	20.50	5.17	bl
07/03/07	nd	4520.51	45.9%	8.97	1.93	65.0	48.8	34.6	32.7	30.2	28.1	20.0	830	855	840	3.3	51.7	60.03	61.70	52.3	29.90	22.92	nd	0.918	0.97	20.90	5.11	bl
07/05/07	nd	4527.09	49.7%	8.97	1.98	65.5	50.0	43.3	42.5	40.2	38.6	33.0	880	890	885	3.3	51.7	52.55	52.92	52.3	30.40	23.47	nd	0.920	1.00	21.60	5.00	bv
07/06/07	nd	4532.36	43.4%	9.91	1.98	64.0	44.0	32.0	30.5	27.5	24.5	13.0	820	850	840	4.5	58.0	77.44	75.38	57.8	33.60	26.05	nd	0.922	1.80	24.10	5.40	bv
07/09/07	nd	4536.59	46.0%	9.98	2.01	62.5	46.5	37.0	35.8	32.8	29.7	21.0	857	883	870	4.0	56.5	67.31	68.44	58.2	34.60	26.53	nd	0.930	1.45	25.10	5.37	bl
07/10/07	nd	4543.50	50.3%	9.93	2.06	64.0	47.0	35.0	34.0	28.0	29.5	22.8	910	930	920	4.3	58.0	57.62	57.25	57.9	35.05	27.15	nd	0.922	0.90	26.10	5.20	bv
										Most Affordable Point (MAP)																		
07/24/07	17:15	4564.69	50.4%	9.00	2.12	66.0	47.5	34.0	33.0	27.0	29.5	24.0	930	950	940	3.6	52.0	51.56	51.72	52.5	32.75	25.28	nd	0.922	0.7	23.5	4.7	bv
07/26/07	16:45	4591.27	50.2%	9.00	2.10	67.0	49.0	34.0	32.5	27.0	29.0	23.5	925	940	930	3.5	52.0	50.51	52.10	52.5	32.61	25.04	nd	0.925	0.7	23.3	4.9	bv
07/27/07	15:10	4607.91	50.6%	9.00	2.13	66.0	55.5	33.0	32.5	30.0	28.0	22.5	930	950	940	3.25	52.0	51.93	51.25	52.5	33.03	25.35	nd	0.923	0.8	23.5	5.8	bv
08/07/07	9:23	4637.68	50.3%	8.95	2.12	66.0	58.2	33.9	32.9	30.9	29.5	23.9	924	940	935	3.3	51.0	50.93	51.52	52.2	32.74	25.09	nd	0.921	0.65	23.2	6.05	bl
08/08/07	9:15	4658.32	50.3%	8.98	2.15	63.0	53.2	33.7	33.0	30.6	29.1	23.8	941	957	948	3.25	51.5	50.67	51.71	52.4	33.25	25.55	nd	0.921	0.66	23.7	5.39	bl
08/09/07	9:10	4680.36	50.3%	8.97	2.15	63.0	57.8	33.8	33.0	27.3	28.5	23.1	945	959	945	3.25	51.0	50.78	51.65	52.3	33.32	25.59	nd	0.92	0.65	23.75	6	bl
08/10/07	9:13	4701.86	50.4%	8.98	2.14	64.0	52.4	33.2	32.9	30.5	27.0	22.5	943	959	946	3.25	51.5	51.08	51.60	52.4	32.97	25.51	nd	0.922	0.65	23.63	5.3	bl
08/14/07	1:48	4721.01	50.2%	8.97	2.10	66.0	49.8	33.2	32.4	30.1	29.0	23.3	925	941	933	2.8	51.0	50.55	51.90	52.3	32.13	24.98	nd	0.926	0.66	23.19	5.07	bl
08/15/07	9:48	4739.81	50.1%	8.97	2.13	64.0	51.5	33.8	33.0	30.6	29.2	23.8	940	955	945	3.25	51.5	51.59	52.15	52.3	33.15	25.31	nd	0.925	0.65	23.49	5.15	bl
08/16/07	8:31	4761.17	50.2%	8.97	2.16	62.5	51.5	34.0	33.2	27.2	28.8	23.4	950	965	960	3.5	51.5	50.85	51.93	52.3	33.27	25.66	nd	0.924	0.68	23.84	5.15	bl
08/17/07	9:25	4784.47	50.2%	8.95	2.17	62.5	51.1	33.4	32.9	27.0	26.9	22.3	955	968	961	3.25	52.0	50.83	51.85	52.2	33.31	25.74	nd	0.923	0.67	23.9	5.12	bl
			MAP Average		2.12																							
			MAP Maximum		2.17																							
			MAP Minimum		1.98																							
Koch membranes - TFC 2822HF-400										**Membrane Ripening Period**																		
08/22/07	9:10	4805.09	42.3%	7.47	1.78	64.0	48.0	33.8	32.9	27.1	29.2	21.9	736	759	745	2.2	44.0	57.86	59.58	43.6	23.27	17.58	nd	0.899	0.95	15.6	4.68	bl
08/23/07	9:10	4827.55	42.5%	7.51	1.77	64.0	49.1	33.9	33.1	30.8	29.2	21.9	739	762	749	2.2	44.0	57.76	59.14	43.8	23.31	17.62	nd	0.900	0.95	15.6	4.81	bl
08/24/07	9:50	4850.52	42.4%	7.51	1.76	64.0	48.1	33.9	33.2	30.7	29.3	22.1	738	759	747	2.2	44.0	57.74	59.54	43.8	23.12	17.54	nd	0.897	0.95	15.6	4.65	bl
08/27/07	1:15	4856.07	42.6%	7.53	1.75	62.0	40.1	33.7	32.7	27.0	29.1	21.9	737	758	744	1.9	44.5	57.62	59.23	43.9	23.09	17.44	nd	0.903	0.94	15.6	3.77	bl
08/28/07	8:35	4875.27	42.6%	7.53	1.76	61.0	48.5	34.0	33.2	30.7	29.7	22.0	740	760	750	2.6	44.0	56.62	59.14	43.9	23.45	17.53	nd	0.900	0.95	15.6	4.70	bV
08/29/07	14:30	4903.54	42.7%	7.53	1.76	60.0	47.5	33.5	33.0	30.5	29.0	22.0	750	770	755	2.1	44.0	56.12	59.03	43.9	23.29	17.57	nd	0.901	0.95	15.7	4.80	bv
08/30/07	8:25	4919.93	42.5%	7.51	1.78	59.9	43.5	34.0	33.2	30.8	29.7	22.0	750	770	760	2.5	44.0	57.35	59.16	43.8	23.29	17.68	nd	0.902	0.95	15.8	4.10	bv
08/31/07	10:10	4942.55	42.6%	7.51	1.78	59.9	44.8	34.0	33.2	30.8	29.7	22.2	755	775	765	2.5	44.0	57.87	58.95	43.8	23.47	17.72	nd	0.902	0.95	15.8	4.25	bv
09/05/07	2:15	4977.24	42.3%	7.51	1.76	62.0	47.9	33.6	32.7	27.0	29.1	21.9	739	758	745	1.9	44.1	58.21	59.82	43.8	23.18	17.46	nd	0.902	1.04	15.5	4.05	bl
09/06/07	9:05	4994.49	42.5%	7.53	1.76	60.0	43.0	34.1	33.2	27.2	29.3	22.1	737	760	746	2.3	44.5	58.34	59.35	43.9	23.30	17.57	nd	0.905	1.05	15.6	4.05	bl
09/07/07	9:55	5019.27	42.3%	7.53	1.73	62.0	57.0	34.5	33.5	30.8	29.8	22.2	738	750	740	2.5	44.5	58.98	59.86	43.9	23.36	17.29	nd	0.898	1.00	15.3	5.90	bv
										12 Point flux and Recovery Period																		
09/11/07	13:00	5044.4	42.9%	5.98	1.67	62.0	42.0	32.0	31.5	30.0	29.8	25.0	710	725	720	1.1	35.0	44.54	46.50	34.9	18.47	13.23	nd	0.852	0.55	11.8	3.30	bv
09/12/07	16:15	5071.67	45.7%	5.98	1.72	61.8	48.0	32.0	31.5	30.0	29.8	26.0	750	760	755	1.1	35.0	38.86	41.39	34.9	18.59	13.63	nd	0.853	0.40	12.1	3.85	bv px out tds high.
10/03/07	9:35	5269.17	46.9%	5.98	1.67	62.0	49.5	32.8	32.2	30.5	30.0	25.7	730	740	735	1.5	35.0	39.58	46.02	34.9	18.69	13.20	nd	0.845	0.45	12.0	4.15	bv
09/13/07	15:45	5093.8	50.3%	5.98	1.82	60.0	38.0	32.0	31.5	30.0	29.8	27.0	800	810	805	1.1	35.0	32.29	34.47	34.9	19.78	14.44	nd	0.859	0.30	12.9	2.80	bv px out tds high.
10/19/07	9:20	5438.31	42.5%	7.47	1.79	58.0	58.9	29.0	28.2	25.3	23.9	16.9	745	767	759	2.7	44.5	57.81	58.92	43.6	23.38	17.76	nd	0.899	1.05	15.7	6.05	bl

10/10/07	14:00	5303.19	42.6%	7.54	1.77	59.0	41.4	34.2	33.3	27.0	29.4	22.0	739	759	725	3.2	44.5	57.62	59.36	44.0	23.51	17.68	nd	0.905	1.07	15.7	4.95	bl
10/11/07	8:35	5321.8	42.6%	7.53	1.77	58.0	49.3	35.0	34.1	27.8	29.8	22.6	742	762	751	3.1	44.5	57.99	59.16	43.9	23.23	17.61	nd	0.903	0.95	15.7	4.88	bl
10/18/07	9:35	5414.55	42.7%	7.53	1.77	58.0	47.1	35.1	34.1	27.8	29.8	22.1	741	764	751	2.8	44.5	57.86	59.03	43.9	23.48	17.67	nd	0.894	1.05	15.7	4.45	bl
10/02/07	8:25	5244.08	42.9%	7.54	1.74	61.0	46.8	34.8	34.0	31.0	29.9	22.6	735	755	750	3.1	44.0	57.13	58.53	44.0	22.82	17.35	nd	0.901	0.95	15.6	4.45	bv
09/14/07	16:35	5107.02	43.2%	7.51	1.77	60.0	46.0	34.0	33.0	30.5	29.0	22.0	750	765	760	2.2	44.0	57.32	57.55	43.8	23.06	17.58	nd	0.902	0.95	15.8	4.50	bv
09/17/07	14:40	5113.22	45.8%	7.51	1.79	60.0	39.0	33.2	32.7	30.4	29.3	23.7	767	784	778	2.2	44.5	49.68	51.84	43.8	23.31	17.79	nd	0.905	0.95	16.2	3.39	bl
10/04/07	16:00	5295.92	47.2%	7.51	1.80	63.0	50.0	33.0	32.5	30.0	29.5	24.0	795	810	800	2.1	44.0	43.06	47.48	43.8	23.57	17.92	nd	0.905	0.55	16.4	4.75	bv
09/18/07	9:00	5131.54	49.9%	7.47	1.88	62.0	45.0	33.1	32.5	27.1	29.7	25.3	820	835	825	2.4	44.5	42.41	43.85	43.6	24.65	18.57	nd	0.907	0.50	17.2	3.82	bl
09/19/07	12:15	5150.03	42.3%	8.93	1.82	63.0	49.6	35.9	34.9	27.8	29.5	19.6	759	785	768	3.6	52.0	69.56	70.98	52.1	28.52	21.58	nd	0.916	1.60	19.1	5.71	bl
09/20/07	9:26	5169.9	45.8%	8.95	1.86	62.0	48.2	35.1	34.2	27.6	29.6	21.8	798	822	805	3.6	52.0	60.16	61.85	52.2	28.64	22.05	nd	0.920	1.10	19.9	5.16	bl
09/21/07	11:13	5194.13	50.1%	8.90	1.93	63.0	48.3	34.1	33.3	26.9	29.4	23.8	845	864	855	3.4	52.0	50.22	51.77	51.9	29.64	22.79	nd	0.922	0.90	21.1	4.88	bl
10/17/07	9:00	5392.24	42.2%	9.98	1.89	58.5	52.3	32.1	30.7	23.1	23.7	11.9	788	831	805	5.1	57.5	77.42	79.64	58.2	33.30	24.95	nd	0.926	2.34	23.4	6.65	bl re-run point to avoid FWF water quali
09/25/07	14:08	5204.98	42.7%	9.98	1.89	65.0	49.5	36.7	35.3	27.1	29.1	16.9	768	805	785	4.3	57.0	77.36	77.97	58.2	32.80	25.01	nd	0.933	2.25	22.8	6.35	bl
10/16/07	14:30	5375.55	45.8%	9.96	1.97	60.0	54.1	30.2	29.1	22.2	23.4	14.9	829	863	843	4.3	58.0	66.68	68.78	58.1	33.81	25.95	nd	0.934	1.66	24.5	6.53	bl re-run point to avoid FWF water quali
09/26/07	17:00	5212.75	46.3%	9.98	1.89	65.0	52.0	35.5	34.2	30.8	29.0	20.0	810	840	825	4.2	57.0	66.96	67.62	58.2	32.50	25.03	nd	0.925	1.60	23.3	6.3	bv
10/11/07	14:00	5325.75	49.6%	10.01	2.00	59.0	43.2	35.8	34.5	27.2	29.4	22.2	874	899	882	4.7	58.0	56.62	59.37	58.4	34.64	26.59	nd	0.930	1.07	25.7	4.68	bl re-run point to avoid FWF water quali
10/12/07	9:08	5344.85	49.7%	9.98	2.03	59.0	55.9	35.8	34.7	27.6	29.5	22.4	877	900	885	4.8	58.0	56.75	58.99	58.2	34.78	26.78	nd	0.927	1.08	25.8	6.37	bl re-run point to avoid FWF water quali
09/27/07	15:50	5221.39	50.7%	9.99	1.96	65.0	54.8	34.8	33.5	30.5	29.2	22.3	860	885	875	4.2	57.0	55.57	56.60	58.3	33.76	25.91	nd	0.928	0.95	25.1	6.15	bv
										Most Affordable Point (MAP) Period																		
10/30/07	14:49	5470.29	44.7%	9.00	1.88	60.0	49.6	35.8	34.8	27.9	29.8	20.9	795	822	804	3.7	52.5	59.86	64.84	52.5	28.78	22.37	nd	0.922	1.25	20.1	5.4	bl
10/31/07	10:19	5487.88	44.9%	9.02	1.89	60.0	48.1	36.0	34.9	27.9	29.7	21.2	798	823	806	3.8	52.5	59.91	64.62	52.6	29.23	22.52	nd	0.922	1.27	20.2	5.21	bl
11/01/07	10:16	5510.05	45.5%	8.98	1.87	60.5	48.3	35.8	34.8	27.2	29.7	21.4	795	822	804	3.8	52.5	59.61	62.71	52.4	28.81	22.21	nd	0.921	1.23	20.0	5.13	bl
11/02/07	10:13	5532.28	45.6%	8.98	1.86	61.0	47.9	35.9	34.8	27.4	29.6	21.6	795	820	803	3.8	52.5	60.54	62.55	52.4	28.92	22.19	nd	0.919	1.25	19.9	5.1	bl
11/06/07	14:05	5556.71	46.1%	8.98	1.87	60.0	46.9	35.7	34.7	27.2	29.8	21.9	795	823	806	3.8	52.5	59.91	61.15	52.4	28.91	22.29	nd	0.922	1.21	20.2	4.95	bl
11/07/07	10:02	5574.64	46.2%	8.97	1.88	60.0	46.4	35.8	34.8	27.3	29.7	21.9	800	825	808	3.7	52.5	59.93	60.96	52.3	29.58	22.32	nd	0.922	1.25	20.1	4.7	bl
11/08/07	9:23	5596.15	45.4%	8.97	1.88	59.0	46.6	35.9	34.9	27.7	29.9	21.7	800	825	813	3.8	52.5	59.74	62.96	52.3	29.61	22.38	nd	0.923	1.24	20.2	4.78	bl
11/09/07	13:16	5621.67	45.1%	8.97	1.89	59.5	45.8	35.4	34.6	27.1	29.3	21.1	800	825	809	3.3	52.0	59.92	63.62	52.3	29.15	22.48	nd	0.919	1.30	20.1	4.87	bl
11/12/07	14:30	5625.97	45.3%	8.97	1.87	60.0	42.1	35.6	34.7	27.1	29.3	21.1	792	819	800	3.3	52.5	59.93	63.14	52.3	28.93	22.21	nd	0.922	1.33	20.0	4.41	bl
11/13/07	15:37	5651.08	45.3%	8.97	1.89	60.0	50.8	35.4	34.3	26.9	29.1	20.9	796	822	804	3.2	52.5	60.32	63.15	52.3	29.18	22.42	nd	0.917	1.36	20.0	5.59	bl
11/14/07	10:18	5668.07	45.2%	8.98	1.89	60.0	46.3	35.4	34.4	26.8	29.2	20.9	799	825	807	3.2	52.5	60.44	63.42	52.4	30.87	22.45	nd	0.924	1.38	20.1	5.05	bl
11/15/07	8:20	5688.28	45.1%	8.98	1.89	60.0	47.1	36.1	35.1	27.4	29.5	21.1	800	825	807	3.6	52.5	60.18	63.85	52.4	29.79	22.49	nd	0.924	1.37	20.2	5.1	bl
11/16/07	9:52	5712.08	45.3%	8.98	1.90	59.5	49.2	36.2	35.2	27.7	29.8	21.4	802	827	816	3.8	52.5	60.24	63.15	52.4	29.87	22.57	nd	0.923	1.33	20.2	5.42	bl
										Base Line Test																		
11/19/07	14:51	5717.84	42.3%	7.47	1.76	58.5	40.3	35.0	34.1	30.9	29.7	22.2	728	756	742	3.3	44.5	57.62	59.48	43.6	22.51	17.42	nd	0.903	1.15	15.4	3.77	bl
11/20/07	14:28	5741.45	42.8%	7.49	1.74	60.0	44.0	34.5	33.8	26.9	29.5	22.1	739	759	743	2.3	44.0	57.59	58.38	43.7	23.41	17.31	nd	0.904	1.05	15.4	4.39	bl
11/21/07	9:57	5760.93	42.6%	7.49	1.74	59.5	50.8	35.0	34.2	27.2	29.7	22.3	740	758	743	2.6	44.0	57.58	58.86	43.7	23.52	17.31	nd	0.903	1.05	15.4	5.14	bl
			MAP Average		1.88																							
			MAP Maximum		1.90																							
			MAP Minimum		1.86																							
Hydranautics membranes - SWC5										**Membrane Ripening Period**																		
11/28/07	14:45	5762.13	43.0%	7.51	1.79	60.0	40.0	34.4	33.5	26.8	29.0	22.2	760	775	770	2.4	44.2	57.54	58.12	43.8	24.02	17.80	nd	0.907	0.90	16.1	3.8	jm, hyd memb 1st point, ~1hr operation
11/29/07	15:10	5772.73	42.7%	7.47	1.79	59.0	42.0	34.8	33.8	30.5	29.8	22.2	770	785	780	2.5	44.0	57.84	58.43	43.6	23.65	17.72	nd	0.909	0.95	16.0	3.95	bv
11/30/07	14:20	5795.71	42.8%	7.47	1.79	58.0	48.0	35.0	34.2	30.8	29.5	23.5	770	785	778	2.5	44.0	57.04	58.31	43.6	23.64	17.72	nd	0.905	0.95	15.9	4.7	bv
12/03/07	16:10	5803.57	42.4%	7.51	1.77	57.0	42.0	35.5	34.8	31.2	30.0	22.5	765	780	775	3.0	44.0	56.82	59.47	43.8	23.39	17.65	nd	0.902	0.90	15.8	3.95	bl
12/04/07	9:24	5820.82	42.5%	7.49	1.79	56.5	46.4	35.6	34.8	27.8	29.9	22.7	762	780	773	3.1	44.0	57.44	59.12	43.7	23.73	17.73	nd	0.904	0.91	15.9	4.5	bl
12/05/07	8:24	5841.99	42.5%	7.49	1.79	57.5	46.3	35.2	34.7	27.6	29.9	22.4	761	782	775	2.9	44.0	57.74	59.22	43.7	23.41	17.78	nd	0.903	0.91	15.9	4.43	bl
12/06/07	9:15	5865.08	42.4%	7.49	1.78	58.0	46.1	35.6	34.8	27.4	29.9	22.4	759	779	770	2.9	44.0	57.62	59.34	43.7	23.42	17.68	nd	0.904	0.95	15.9	4.45	bl
12/07/07	8:30	5886.31	42.2%	7.51	1.78	58.0	47.8	35.7	35.0	27.8	29.9	22.7	760	780	772	3.1	44.0	57.26	59.96	43.8	23.42	17.66	nd	0.901	0.91	15.9	4.63	bl
12/10/07	15:44	5893.76	42.4%	7.49	1.77	56.5	41.8	35.2	34.4	27.1	29.9	22.2	760	777	765	2.6	44.0	57.13	59.25	43.7	23.31	17.59	nd	0.902	0.92	15.8	3.95	bl
12/11/07	14:45	5916.77	42.4%	7.49	1.78	57.0	47.1	35.3	34.6	27.2	29.9	22.3	760	780	770	2.6	44.0	57.14	59.45	43.7	23.42	17.63	nd	0.903	0.93	15.9	4.64	bl
12/12/07	9:59	5934.33	42.5%	7.51	1.78	56.5	44.9	35.9	35.1	27.9	30.1	22.9	762	782	772	3.2	44.0	58.21	59.36	43.8	23.61	17.69	nd	0.903	0.91	15.9	4.23	bl
12/13/07	9:20	5957.51	42.4%	7.51	1.79	55.5	48.9	36.2	35.6	28.2	30.1	23.0	762	782	775	4.3	44.0	58.73	59.46	43.8	23.55	17.76	nd	0.904	0.92	15.9	4.77	bl
12/14/07	8:47	5979.06	42.4%	7.51	1.79	56.0	46.9	36.4	35.6	28.2	30.2	23.1	765	785	777	3.4	44.0	58.26	59.53	43.8	23.47	17.79	nd	0.899	0.91	15.9	4.3	bl
										12 Point flux and Recovery Period																		
01/04/08	10:15	6044.01	43.0%	5.97	1.70	56.5	47.1	32.9	32.3	27.3	30.1	25.0	722	738	733	1.8	35.5	46.14	49.32	34.8	18.91	13.42	nd	0.844	0.55	12.3	3.95	bl
01/08/08	13:28	6072.97	47.1%	6.00	1.78	56.5	39.1	32.1	31.8	27.1	30.0	26.6	765	779	773	1.6	36.0	39.29	45.53	35	19.11	14.14	nd	0.854	0.41	13.1	2.97	bl
01/09/08	14:40	6098.13	51.4%	5.97	1.84	56.0	43.5	32.5	32.0	30.8	29.0	26.0	800	810	805	1.7	35.0	32.92	44.74	34.8	19.89	14.53	nd	0.861	0.30	13.1	3.4	bv
01/10/08	9:15	6116.76	42.4%	7.51	1.80	56.0	53.6	34.9	33.9	28.0	30.1	22.6	762	779	769	3.3	44.0	57.44	59.56	43.8	23.62	17.88	nd	0.903	0.89	16.2	5.33	bl
01/11/08	10:05	6139.91	46.0%	7.49	1.86	56.0	41.2	33.7	33.0	32.4	29.9	24.1	801	818	805	3.1	44.5	50.01	51.33	43.7	24.17	18.41	nd	0.908	0.74	19.8	3.61	bl
01/15/08	9:51	6164.8	47.1%	7.49	1.92	56.0	45.8	33.8	32.9	27.7	30.1	25.1	842	858	845	3.1	45.0	41.98	49.13	43.7	25.02	19.02	nd	0.911	0.46	17.8	4.04	bl
01/16/08	10:19	6187.17	42.6%	9.00	1.91	56.0	47.1	36.1	34.9	28.1	29.9	19.9	803	826	818	4.3	52.5	69.36	70.77	52.5	29.57	22.72	nd	0.919	1.49	20.3	5.23	bl

01/17/08	8:44	6207.86	45.8%	9.00	1.96	56.0	46.1	36.6	34.7	30.2	30.1	22.6	850	874	860	4.6	53.5	60.12	62.15	52.5	30.29	23.39	nd	0.923	1.03	21.4	4.59	bl
01/18/08	9:28	6229.25	49.1%	8.98	2.03	56.0	44.1	34.6	33.8	28.0	30.1	23.7	899	918	905	5.8	53.5	50.74	54.42	52.4	31.37	24.12	nd	0.926	0.87	22.5	4.22	bl
01/23/08	9:11	6252.9	42.4%	9.99	1.97	55.0	52.2	37.6	36.2	28.8	30.0	18.1	815	847	829	5.6	58.0	77.29	79.24	58.3	33.58	26.05	nd	0.922	2.19	23.7	6.65	bl
01/30/08	11:15	6291.76	45.4%	9.98	1.99	56.5	48.2	36.7	35.3	28.2	29.9	20.1	847	878	861	5.3	58.0	67.21	70.02	58.2	34.18	26.31	nd	0.917	1.42	24.4	5.67	bl
01/31/08	9:10	6311.85	49.0%	9.99	2.06	56.0	46.1	36.1	35.1	28.3	30.2	22.9	902	922	916	5.8	58.0	56.47	60.72	58.3	35.53	27.21	nd	0.922	0.94	26.3	4.85	bl
										Base Line Test																		
02/01/08	9:07	6333.97	42.7%	7.51	1.80	54.5	42.7	34.8	34.0	28.6	30.2	22.1	764	783	778	3.4	44.5	57.93	58.86	43.8	23.94	17.87	nd	0.896	0.91	16.1	3.85	bl
										Most Affordable Point (MAP) Period																		
02/05/08	2:18	6365.02	45.6%	9.05	1.97	55.5	50.1	35.2	34.1	27.9	29.9	21.8	844	868	859	4.2	53.5	60.34	62.96	52.8	30.68	23.64	nd	0.916	1.05	21.5	5.47	bl
02/06/08	4:25	6389.4	45.2%	8.98	1.93	56.0	43.1	35.1	34.1	27.8	29.9	21.6	838	859	843	3.9	53.0	59.92	63.46	52.4	29.86	22.95	nd	0.912	1.02	20.9	4.49	bl
02/07/08	10:22	6407.35	45.2%	8.98	1.95	56.0	46.4	35.3	34.5	28.1	29.9	21.8	840	861	850	5.6	53.0	59.88	63.61	52.4	30.25	23.17	nd	0.912	1.01	21.0	4.91	bl
02/08/08	11:04	6430.12	45.0%	8.97	1.94	56.0	43.1	35.1	34.2	27.7	29.8	21.4	840	860	845	3.8	52.5	60.19	63.84	52.3	30.18	23.08	nd	0.912	0.98	20.9	4.52	bl
02/12/08	9:00	6455.09	45.9%	9.02	1.94	57.0	47.2	35.3	34.2	27.9	29.9	22.0	839	859	845	4.2	53.5	60.31	61.98	52.6	30.44	23.13	nd	0.912	1.01	21.3	5.14	bl
02/13/08	10:45	6478.85	45.9%	9.02	1.95	57.0	46.0	35.3	34.2	27.9	29.9	22.1	840	861	850	4.2	53.5	60.67	61.89	52.6	30.52	23.29	nd	0.913	1.03	21.2	4.75	bl
02/14/08	11:20	6501.59	45.7%	9.02	1.95	56.0	44.1	35.3	34.2	27.8	29.9	22.1	843	865	858	4.2	53.5	59.74	62.46	52.6	30.67	23.34	nd	0.914	1.01	21.3	4.66	bl
02/15/08	9:08	6523.37	45.6%	9.03	1.95	55.0	49.1	35.8	34.7	28.2	30.1	22.1	843	865	856	4.5	53.5	59.76	62.78	52.7	30.43	23.38	nd	0.913	1.02	21.4	5.28	bl
02/19/08	13:05	6547.73	45.6%	9.03	1.94	56.0	45.0	35.5	34.5	31.7	30.0	22.3	845	865	855	4.5	53.7	59.21	62.97	52.7	30.29	23.20	nd	0.914	1.00	21.1	4.7	bv
02/20/08	10:07	6566.39	46.0%	9.02	1.95	56.0	48.4	35.3	34.2	27.8	29.9	22.0	841	861	850	4.5	53.5	59.88	61.85	52.6	30.41	23.31	nd	0.913	1.03	21.2	5.24	bl
	MAP Average		45.6%	9.01	1.95	56.1																						
	MAP Maximum		46.0%	9.05	1.97	57.0																						
	MAP Minimum		45.0%	8.97	1.93	55.0																						
										Base Line Test																		
02/21/08	9:15	6587.62	42.2%	7.51	1.80	56.0	42.1	34.6	33.8	27.9	30.0	22.5	763	782	777	3.1	45.0	57.53	59.91	43.8	23.76	17.87	nd	0.893	0.89	16.1	3.99	bl
02/22/08	9:58	6612.33	42.2%	7.51	1.81	56.0	46.9	34.3	33.6	27.4	29.9	22.4	760	780	773	2.8	44.5	57.92	60.11	43.8	23.71	17.96	nd	0.894	0.91	16.1	4.54	bl
DOW-FILMTEC Hybrid 1 SW30XHR-400i - 1 SW30XLE-400i - 5 XUS-259124 x 3 vessels										**Membrane Ripening Period**																		
02/27/08	11:25	6631.98	42.2%	7.51	1.75	58.0	41.2	33.8	33.0	26.9	29.3	22.0	744	762	755	2.2	44.5	58.02	60.04	43.8	23.33	17.39	nd	0.893	0.89	15.4	3.94	bl
02/28/08	9:25	6653.99	42.5%	7.53	1.76	57.0	45.2	34.6	33.7	27.4	29.9	22.1	744	765	759	2.8	44.5	57.93	59.48	43.9	23.65	17.51	nd	0.889	0.85	15.7	4.38	bl
02/29/08	9:46	6676.55	42.4%	7.51	1.75	58.0	42.4	44.5	33.6	27.3	29.9	22.1	745	763	755	2.7	44.5	57.81	59.49	43.8	23.26	17.41	nd	0.888	0.88	15.6	4.06	bl
03/04/08	9:26	6699.51	42.0%	7.53	1.75	56.0	47.9	34.6	33.7	27.3	29.9	22.2	742	761	753	2.7	44.5	57.81	60.61	43.9	23.23	17.43	nd	0.886	0.91	15.5	4.74	bl
03/05/08	9:39	6721.62	42.2%	7.53	1.75	56.0	42.2	34.4	33.6	27.4	29.9	21.9	744	763	758	2.7	45.0	57.73	60.01	43.9	23.43	17.47	nd	0.886	0.90	15.7	4.04	bl
03/06/08	9:53	6745.85	42.5%	7.51	1.76	56.5	46.9	34.3	33.6	27.3	29.9	22.4	745	763	758	2.7	44.5	57.96	59.18	43.8	23.27	17.52	nd	0.887	0.94	15.5	4.58	bl
03/07/08	10:34	6768.52	42.3%	7.49	1.75	58.0	44.1	34.1	33.2	29.1	29.9	22.2	747	763	758	2.3	44.5	57.43	59.64	43.7	23.45	17.41	nd	0.889	0.89	15.7	4	bl
03/11/08	10:21	6794.4	42.4%	7.51	1.76	57.0	42.3	34.4	33.5	27.3	29.9	22.0	745	768	760	2.3	44.5	57.61	59.42	43.8	23.64	17.51	nd	0.887	0.91	15.6	4.11	bl
03/12/08	12:42	6820.72	42.4%	7.53	1.76	57.0	47.5	34.5	33.8	28.0	30.0	22.2	750	770	760	2.8	44.0	58.57	59.75	43.9	23.72	17.55	nd	0.884	0.90	15.8	4.65	bv
03/13/08	12:15	6842.29	42.6%	7.56	1.75	57.0	43.0	34.5	33.0	31.0	29.8	22.0	750	770	765	2.6	44.0	58.70	59.48	44.1	23.59	17.56	nd	0.887	0.90	15.8	4.25	bv
03/18/08	10:48	6884.52	42.4%	7.53	1.79	54.5	52.2	34.8	33.9	27.6	30.0	22.6	758	778	765	3	45.0	58.02	59.74	43.9	23.64	17.82	nd	0.889	1.04	15.8	5.27	bl
										12 Point flux and Recovery Period																		
03/19/08	10:54	6906.91	43.0%	6.00	1.66	54.5	40.4	33.5	32.9	27.6	30.1	24.5	704	720	715	2.1	36.0	46.32	51.36	35	18.72	13.23	nd	0.832	0.61	11.4	3.31	bl
03/20/08	10:01	6930.05	47.1%	6.00	1.69	54.5	43.6	33.1	32.8	27.6	29.9	25.1	735	743	739	2.1	36.5	39.36	48.66	35	19.27	13.45	nd	0.836	0.45	12.2	3.6	bl
03/21/08	9:31	6951.88	50.8%	5.95	1.79	56.0	38.1	33.1	32.5	27.2	30.1	25.8	780	788	784	2.1	36.0	33.57	46.42	34.7	19.71	14.11	nd	0.834	0.28	12.9	2.95	bl
03/25/08	10:05	6977.77	42.3%	7.51	1.77	55.0	45.4	34.8	33.8	27.9	29.9	22.1	753	771	761	3.2	45.0	57.79	59.85	43.8	23.32	17.59	nd	0.887	0.94	15.7	4.35	bl
03/26/08	9:59	6999.91	45.1%	7.49	1.79	56.0	42.2	34.1	33.4	27.5	29.9	23.4	781	798	787	2.9	45.0	50.22	53.12	43.7	23.77	17.81	nd	0.891	0.75	16.3	3.77	bl
04/08/08	9:39	7138.64	50.9%	7.53	1.89	55.0	46.9	34.4	33.9	29.2	29.9	24.2	830	843	839	2.9	45.6	42.42	51.54	43.9	25.03	18.82	nd	0.893	0.48	17.5	4.38	bl
03/27/08	10:06	7024.03	50.9%	7.49	1.86	56.0	47.9	33.9	33.1	31.1	29.9	24.7	722	738	728	2.7	45.0	42.18	50.54	43.7	24.49	18.46	nd	0.893	0.47	18.1	4.39	bl, feed pressure went down but recover
04/01/08	13:30	7060.47	42.1%	9.00	1.89	55.0	52.5	37.0	35.5	28.0	29.8	19.5	790	815	800	4.4	53.0	71.14	72.34	52.5	29.59	22.49	nd	0.909	1.60	19.8	6.15	bv
04/04/08	12:01	7115.52	45.1%	9.02	1.91	56.0	52.6	36.3	35.2	27.6	29.9	21.1	825	845	838	4.1	53.5	59.92	63.94	52.6	29.84	22.77	nd	0.908	1.02	20.7	5.86	bl
04/09/08	10:09	7160.95	48.0%	8.98	2.00	54.0	50.0	36.0	35.1	27.6	29.9	23.1	885	900	895	4.2	54.0	50.76	56.85	52.4	31.24	23.78	nd	0.911	0.84	22.0	5.28	bl
04/10/08	9:32	7182.71	55.9%	8.98	2.10	54.0	46.6	35.8	34.9	27.7	29.9	24.1	940	951	944	4.2	54.0	41.34	53.03	52.4	32.65	24.96	nd	0.915	0.49	23.4	4.67	bl
04/11/08	9:45	7205.34	42.7%	10.03	1.99	56.0	52.1	36.8	35.2	26.9	27.3	15.2	827	860	842	5.4	58.0	77.27	78.62	58.5	34.63	26.38	nd	0.918	1.98	24.2	6.65	bl
04/16/08	9:23	7235.23	46.6%	9.98	2.01	56.0	53.5	34.4	33.1	24.2	25.4	15.8	858	883	873	5.5	58.5	66.76	71.23	58.2	34.75	26.58	nd	0.911	1.48	24.9	6.54	bl
04/17/08	8:05	7255.32	50.7%	9.96	2.06	56.0	52.6	38.4	37.3	27.5	30.0	22.1	905	925	919	5.6	58.5	56.51	61.17	58.1	35.15	27.24	nd	0.921	0.97	26.0	5.99	bl
04/18/08	9:14	7278.18	42.2%	7.47	1.79	56.0	49.1	37.5	36.6	27.2	29.9	20.0	760	781	773	3.1	45.5	57.61	59.66	43.6	23.85	17.73	nd	0.881	0.91	16.0	4.95	bl

Water Quality Data

TIME			pH			CONDUCTIVITY						TDS							TURBIDITY		SDI	BORON			OTHER					
		Operation		pH				Conductivity (mS/cm)						TDS (mg/L)					Turbidity (NTU)		Density Index			Boron (mg/L)		Inhibitor			FEED	
Date	Time	Time	$pH_{F\text{-}sys}$	$pH_{P\text{-}sys}$	$pH_{C\text{-}sys}$	$C_{CF\text{-}out}$	$C_{F\text{-}PX\text{-}out}$	$C_{F\text{-}sys}$	$C_{P\text{-}sys}$	$C_{C\text{-}sys}$	$C_{C\text{-}PX\text{-}out}$	$TDS_{CF\text{-}out}$	$TDS_{F\text{-}PX\text{-}out}$	PX % Inc	$TDS_{F\text{-}sys}$	$TDS_{P\text{-}sys}$	$TDS_{C\text{-}sys}$	$TDS_{C\text{-}PX\text{-}out}$	$NTU_{MF\text{-}in}$	$NTU_{CF\text{-}out}$	$SDI_{CF\text{-}out}$	$B_{CF\text{-}out}$	$B_{F\text{-}sys}$	$B_{P\text{-}sys}$	V_{TANK}	Pump Speed	HP VFD Speed	PX VFD Speed	VFD Speed	Notes
MM/DD/YY	hh:mm	hh.hh	SC5	SC11	SC6	SC3	SC4	SC5	SC11	SC6	SC7	SC3	SC4		SC5	SC11	SC6	SC7	CART	meter	CART	SC3	SC5	SC11	(gallons)	(gph)	(Hertz)	(Hertz)	(Hertz)	
Toray Membranes - TM800-400												**Membrane Ripening Period**																		
05/30/07	11:25	4151.46	7.90	4.40	7.61	50.70	52.35	51.62	322.30	84.62	81.53	32.56	33.77	3.7%	33.23	154.20	60.80	57.95	nd	0.040	4.0	nd	nd	nd	7.0	60/75	44.85	33.08	61.20	
06/05/07	12:05	4199.43	7.88	6.77	7.73	49.81	53.23	51.63	353.50	84.01	82.22	31.88	34.41	7.9%	33.27	169.50	60.30	58.57	nd	0.057	4.0	nd	nd	nd	11.0	70/75	33.28	44.94	61.20	
06/06/07	10:56	4219.43	7.91	7.69	7.69	50.30	52.13	51.05	333.90	83.38	81.08	32.24	33.61	4.2%	32.84	159.80	59.75	57.53	nd	0.051	3.9	nd	nd	nd	8.0	70/75	44.92	33.13	61.20	bl
06/07/07	9:58	4240.04	7.73	6.01	7.6	50.13	52.25	51.10	328.80	83.46	81.03	32.16	33.67	4.7%	32.87	157.40	59.77	57.48	nd	0.044	3.6	nd	nd	nd	5.2	70/75	44.91	33.08	61.20	bl
06/11/07	12:08	4256.76	8.07	6.75	7.83	49.62	52.71	50.86	355.70	82.83	81.73	32.62	33.62	3.1%	32.73	170.80	59.72	57.68	1.852	0.067	4.0	nd	nd	nd	23.5	70/75	44.98	33.19	61.20	bv
06/12/07	9:51	4278.47	7.90	6.4	7.77	49.27	51.03	49.98	343.20	80.85	79.22	31.57	32.85	4.1%	32.10	164.40	57.44	55.84	1.345	0.086	3.7	nd	nd	nd	21.0	70/70	44.91	33.49	61.20	bl
06/13/07	12:00	4299.52	8.10	7.05	7.9	49.04	50.86	49.93	355.70	80.89	78.95	31.40	32.72	4.2%	32.06	170.30	57.39	55.57	0.933	0.093	4.1	nd	nd	nd	18.0	70/77	44.92	33.35	61.20	bv
06/14/07	9:15	4316.9	8.10	6.96	7.89	48.97	51.31	49.86	363.30	81.13	79.33	31.37	33.06	5.4%	32.04	174.20	57.62	55.92	0.961	0.095	4.1	nd	nd	nd	15.8	70/75	44.92	33.34	61.20	bv
												12 Point flux and recovery Period																		
06/19/07	10:30	4342.16	7.99	6.29	7.79	48.88	51.57	49.87	475.50	80.39	78.43	31.28	33.21	6.2%	32.03	229.30	57.01	55.18	1.056	0.067	3.4	nd	4.6	0.91	12.5	70/75	35.83	27.51	61.20	bl
06/20/07	10:31	4364.54	7.97	6.47	7.85	49.03	53.22	50.76	519.30	85.11	82.68	31.45	34.43	9.5%	32.73	251.10	61.44	59.01	1.122	0.092	3.9	nd	4.7	0.94	9.7	70/75	35.86	24.58	61.20	bl px out tds high. re-run point on 6-21
06/21/07	10:05	4386.46	7.87	6.39	7.77	48.78	51.86	49.95	453.00	83.80	80.41	31.23	33.42	7.0%	32.08	218.20	60.05	56.94	0.802	0.079	3.9	nd	4.6	0.88	7.5	70/75	35.85	25.02	61.20	bl
06/22/07	10:36	4410.98	7.73	5.96	7.57	48.86	51.73	49.91	492.80	87.71	82.49	31.30	33.35	6.5%	32.07	237.90	63.60	58.81	0.771	0.057	3.8	nd	4.6	0.95	24.3	70/75	36.08	22.45	61.20	bl
06/26/07	10:50	4433.05	7.79	5.91	7.66	48.83	51.12	49.78	371.80	80.13	78.28	31.27	32.94	5.3%	31.97	178.50	56.71	55.03	1.121	0.087	3.6	nd	4.8	0.80	21.8	70/75	45.19	34.07	61.20	bl
06/27/07	10:10	4454.51	7.91	6.22	7.72	48.81	51.39	49.91	397.80	84.82	82.69	31.26	33.11	5.9%	32.05	191.10	60.98	59.00	0.826	0.062	3.8	nd	4.7	0.81	18.5	70/75	45.20	29.77	61.20	bl
06/28/07	9:25	4476.05	7.96	6.32	7.75	48.85	51.71	49.99	429.60	88.34	85.65	31.30	33.35	6.5%	32.12	206.70	64.14	61.70	0.757	0.085	4.3	nd	4.7	0.86	15.8	70/75	45.19	27.13	61.20	bl
06/29/07	10:13	4497.56	8.02	6.14	7.83	48.63	51.44	50.06	307.40	81.49	80.02	31.15	33.15	6.4%	32.17	146.90	57.96	56.58	0.663	0.1	4.7	nd	4.7	0.67	12.6	70/75	54.01	38.91	61.20	bl
07/03/07	8:45	4520.82	7.93	6.03	7.78	48.84	51.07	49.63	335.80	84.83	82.52	31.27	32.88	5.1%	31.87	160.90	61.01	58.87	1.127	0.102	5.0	nd	4.7	0.74	9.7	70/75	53.99	34.69	61.20	bl
07/05/07	16:25	4527.33	8.12	7.84	7.88	49.18	52.07	50.38	385.80	90.10	87.82	31.54	33.59	6.5%	32.39	185.40	65.66	63.58	0.769	0.118	5.1	nd	4.3	0.79	9.0	50/70	53.99	31.14	61.20	bv
07/06/07	14:45	4532.55	8.13	6.59	7.87	49.05	50.73	49.99	290.70	81.29	79.88	31.46	32.65	3.8%	32.12	138.80	57.80	56.45	0.87	0.1	4.8	4.2	4.1	0.65	8.0	70/70	60.00	42.39	61.20	bv
07/09/07	13:50	4536.97	7.87	5.88	7.71	48.86	52.06	50.27	305.30	84.78	83.51	31.27	33.59	7.4%	32.27	145.80	60.93	59.72	1.383	0.082	4.3	nd	4.3	0.69	7.5	70/70	60.00	39.28	61.20	bl
07/10/07	16:40	4543.67	8.07	7.51	7.82	48.84	51.42	49.90	346.10	90.52	88.04	31.34	33.12	5.7%	32.06	165.80	66.15	63.79	1.204	0.142	4.9	nd	4.2	0.74	6.0	70/70	60.00	33.37	61.20	bv
												Most Affordable Point Period																		
07/24/07	17:25	4564.92	7.87	5.51	7.97	48.86	52.21	50.12	449.70	88.35	90.23	31.36	33.67	7.4%	32.23	216.60	65.88	64.07	0.889	0.074	3.8	nd	nd	0.95	25.8	70/70	54.70	30.56	60.17	bv
07/26/07	16:50	4591.4	7.84	5.98	7.85	48.85	51.69	49.95	460.50	90.25	88.03	31.30	33.38	6.6%	32.16	222.20	65.90	63.76	0.759	0.076	3.9	nd	nd	nd	21.9	70/70	54.67	30.21	60.95	bv
07/27/07	15:25	4607.78	7.94	5.82	7.78	48.84	51.86	50.11	425.50	90.00	88.08	31.30	33.47	6.9%	32.20	205.10	65.64	63.71	0.971	0.071	2.9	nd	5.3	nd	20.0	70/70	54.66	30.64	64.80	bv
08/07/07	9:36	4637.89	8.09	5.79	7.74	48.85	52.25	50.14	421.20	90.67	88.56	31.28	33.74	7.9%	32.27	202.60	66.29	64.33	1.08	0.096	4.9	nd	nd	nd	15.7	70/75	53.88	30.14	66.00	bl
08/08/07	9:27	4658.51	7.91	5.82	7.69	48.66	51.64	49.88	370.90	90.34	87.74	31.12	33.27	6.9%	32.02	177.90	65.93	63.54	0.76	0.086	4.5	nd	nd	nd	12.6	70/75	53.85	30.15	63.30	bl
08/09/07	9:37	4680.82	7.93	5.82	7.69	48.65	51.58	49.79	360.70	90.35	87.82	31.11	33.23	6.8%	31.97	173.00	65.94	63.69	1.173	0.187	14.9	nd	nd	nd	9.8	70/75	53.84	30.15	65.95	bl
08/10/07	9:24	4702.05	7.97	5.96	7.73	48.69	51.66	49.84	360.10	90.02	87.51	31.12	33.30	7.0%	32.00	172.70	65.68	63.35	0.672	0.103	5.1	4.6	4.5	0.82	6.5	75/85	53.85	30.21	62.85	bl
08/14/07	2:14	4721.44	7.97	6.07	7.74	48.89	51.86	50.02	413.70	89.63	87.44	31.28	33.42	6.8%	32.12	198.80	65.36	63.27	0.789	0.074	4.7	4.6	4.7	0.89	23.0	80/85	53.81	30.35	61.85	bl
08/15/07	10:18	4740.31	7.91	6.27	7.67	48.95	51.86	50.01	377.30	90.15	87.89	31.29	33.43	6.8%	32.14	181.20	65.80	63.72	0.865	0.065	3.9	nd	nd	nd	20.2	75/80	53.82	30.33	62.29	bl
08/16/07		4761.36	7.82	5.82	7.61	48.77	51.74	49.92	344.60	90.69	88.25	31.21	33.34	6.8%	32.06	165.10	66.27	64.03	0.799	0.058	4.0	nd	nd	nd	17.3	70/75	53.82	30.26	61.06	bl
08/17/07	9:35	4784.63	7.81	5.83	7.62	48.67	51.77	50.04	345.40	90.45	87.94	31.14	33.36	7.1%	32.15	165.30	66.11	63.71	0.624	0.061	4.3	4.5	5.3	2.5	14.2	70/75	53.79	30.27	61.94	bl
												MAP Average		7%		188.83						MAP Average		1.19						
												MAP Maximum		8%		222.20						MAP Maximum		2.5						
												MAP Minimum		6%		165.10						MAP Minimum		0.79						
Koch membranes - TFC 2822HF-400												**Membrane Ripening Period**																		
08/22/07	9:23	4805.31	7.91	7.52	7.73	48.86	50.91	49.67	529.30	80.90	78.61	31.30	32.74	4.6%	31.88	256.00	57.42	55.31	0.543	0.068	4.0	nd	nd	nd	11.3	70/75	45.12	34.39	59.82	bl
08/23/07	9:27	4827.84	7.93	7.54	7.75	48.88	50.81	49.57	516.70	80.84	78.51	31.29	32.69	4.5%	31.83	249.70	57.36	55.22	0.791	0.067	3.9	nd	nd	nd	8.0	70/75	45.12	34.39	60.76	bl
08/24/07	10:05	4850.75	7.88	7.36	7.69	49.04	50.86	49.79	531.20	81.01	78.74	31.42	32.73	4.2%	31.97	256.90	57.51	55.45	0.803	0.066	3.9	nd	nd	nd	5.0	70/75	45.12	34.32	59.93	bl
08/27/07	1:35	4856.41	7.81	6.95	7.64	48.72	50.65	49.53	590.40	81.14	78.76	31.17	32.55	4.4%	31.78	286.00	57.62	55.45	0.482	0.061	3.5	nd	nd	nd	24.0	70/75	45.09	34.34	55.24	bl
08/28/07	8:45	4875.44	7.84	6.73	7.66	48.78	50.79	49.56	546.80	80.80	78.83	31.28	32.69	4.5%	31.79	264.60	57.34	55.48	0.563	0.059	2.3	nd	nd	nd	21.5	70/75	45.12	34.57	59.93	bv
08/29/07	14:40	4903.70	7.77	6.31	7.59	48.56	50.62	49.43	524.20	81.15	78.83	31.10	32.56	4.7%	31.76	253.20	57.58	55.35	0.671	0.043	2.7	4.5	4.5	1.3	17.5	70/75	45.12	34.39	60.18	bv
08/30/07	8:35	4920.07	7.80	6.37	7.63	48.79	50.72	49.54	497.70	80.85	78.55	31.22	32.62	4.5%	31.78	239.90	57.36	55.16	0.691	0.042	1.9	nd	nd	nd	15.0	70/75	45.12	34.48	56.96	bv
08/31/07	10:25	4942.80	7.85	6.38	7.60	48.98	50.90	49.72	489.40	80.97	78.58	31.37	32.74	4.4%	31.90	236.30	57.44	55.31	0.645	0.042	2.6	nd	nd	nd	12.0	70/75	45.12	34.62	57.92	bv
09/05/07	2:25	4977.42	7.81	6.91	7.67	48.92	51.24	49.87	571.60	80.47	78.49	31.35	32.95	5.1%	32.03	276.60	57.00	55.15	0.643	0.065	3.0	nd	nd	nd	7.5	70/75	45.12	35.32	60.44	bl
09/06/07	9:20	4994.74	7.78	6.41	7.64	48.90	51.32	49.96	542.70	80.77	78.64	31.32	33.02	5.4%	32.08	262.50	57.25	55.33	0.755	0.07	3.1	4.5	4.5	1.4	5.1	70/75	45.14	35.40	56.85	bl
09/07/07	10:05	5019.44	7.93	7.36	7.73	49.03	51.03	49.85	624.70	80.35	78.44	31.43	32.90	4.7%	32.03	302.60	56.87	55.13	0.894	0.051	3.1	nd	nd	nd	22.1	70/75	45.12	35.07	65.25	bv
												12 Point flux and recovery Period																		
09/11/07	13:10	5044.56	7.87	6.23	7.78	48.82	51.77	49.97	798.40	80.46	78.67	31.24	33.35	6.8%	32.09	388.30	57.07	55.44	0.384	0.039	2.7	4.8	4.7	1.6	18.5	70/75	35.71	28.45	54.30	bv
09/12/07	16:25	5071.85	7.83	6.18	7.66	48.73	52.46	50.23	818.60	84.47	81.68	31.14	33.82	8.6%	32.23	400.70	60.61	58.02	0.427	0.036	2.7	4.7	4.7	1.6	15.0	70/75	35.74	25.68	57.60	bv px out tds high.
10/03/07	9:45	5269.35	7.92	6.84	7.75	48.73	50.90	49.47	841.70	82.58	79.11	31.21	32.83	5.2%	31.76	411.80	58.95	55.73	0.567	0.055	2.2	nd	nd	nd	9.5	70/75	35.86	26.10	58.72	bv
09/13/07	16:10	5094.23	7.77	6.49	7.58	48.70	54.98	51.05	881.60	90.32	87.05	31.25	35.75	14.4%	32.86	431.70	65.91	62.70	0.285	0.038	3.2	4.5	4.8	1.6	12.0	70/75	35.85	23.10	51.27	bv px out tds high.
10/19/07	9:33	5438.54	7.84	6.31	7.71	48.89	51.32	49.77	519.9	81.02	78.94	31.27	33.07	5.8%	31.96	251.20	57.45	55.57	0.648	0.176	6.8	nd	nd	nd	10.2	70/75	45.06	35.57	66.00	bl
10/10/07	16:08	5303.34	7.78	6.24	7.63	48.60	51.29	49.81	598.80	80.43	78.89	31.02	32.99	6.4%	31.95	290.00	56.95	55.53	0.588	0.093	3.8	nd	nd	nd	27.7	70/75	45.28	36.02	56.09	bl
10/11/07	8:52	5322.08	7.78	6.21	7.65	49.04	50.79	49.58	563.9	81.09	78.79	31.41	32.68	4.0%	31.83	273.00	57.63	55.49	0.699	0.103	3.2	nd	nd	nd	25.1	70/75	45.09	34.72	60.49	bl

10/18/07	9:57	5414.92	7.81	6.27	7.67	48.84	51.15	49.79	532.5	80.94	78.87	31.26	32.93	5.3%	31.98	253.10	57.45	55.54	0.569	0.180	7.6	nd	nd	nd	13.1	70/75	45.06	35.63	58.76	bl
10/02/07	8:40	5244.29	7.88	6.19	7.73	48.83	51.08	49.63	634.20	80.86	78.98	31.30	32.91	5.1%	31.87	307.80	57.37	55.63	0.559	0.055	3.6	nd	nd	nd	12.2	70/75	45.26	34.72	58.75	bv
09/14/07	16:45	5107.14	7.84	6.50	7.65	48.73	51.43	50.00	588.40	81.15	79.23	31.24	33.10	6.0%	32.12	284.70	57.62	55.84	0.447	0.037	3.0	4.6	4.7	1.3	10.5	70/75	45.22	34.92	58.75	bv
09/17/07	14:55	5113.46	7.94	7.21	7.76	48.75	51.46	49.78	666.80	84.89	82.45	31.20	33.09	6.1%	31.97	323.70	60.98	58.72	0.725	0.080	3.1	4.9	4.8	1.4	9.7	70/75	45.06	31.27	53.83	bl
10/04/07	16:10	5296.06	8.00	7.23	7.70	48.72	50.94	49.48	749.90	88.17	85.08	31.19	32.75	5.0%	31.80	365.20	61.16	59.26	0.684	0.094	4.3	nd	nd	nd	5.5	7075	45.09	28.14	60.73	bv
09/18/07	9:20	5131.86	7.98	7.05	7.75	49.02	52.94	50.49	780.30	90.39	88.07	31.42	34.22	8.9%	32.47	380.60	66.02	63.85	0.398	0.074	3.2	4.7	4.9	1.6	7.5	70/75	45.05	27.51	56.27	bl px out tds high.
09/19/07	12:37	5150.4	8.01	7.65	7.84	49.16	51.21	49.91	563.30	80.79	78.97	31.48	32.96	4.7%	32.07	272.70	57.27	55.67	0.754	0.081	4.3	4.7	4.8	1.3	4.6	70/75	53.65	40.84	62.99	bl
09/20/07	9:52	5170.33	7.96	7.14	7.76	48.91	51.19	49.83	563.20	84.88	82.40	31.32	32.96	5.2%	32.01	272.70	61.01	58.74	0.552	0.076	3.6	4.8	4.9	nd	22.7	70/75	53.63	36.18	61.21	bl
09/21/07	11:33	5194.57	7.96	6.85	7.73	48.86	51.39	49.87	633.10	90.52	87.67	31.25	33.11	6.0%	32.02	307.00	66.09	63.46	0.514	0.079	3.6	4.7	4.9	1.4	19.1	70/75	53.58	31.29	60.32	bl
10/17/07	9:15	5392.50	7.83	6.17	7.69	48.91	50.93	49.73	396.6	80.18	79.02	31.28	32.79	4.8%	31.92	190.50	56.75	55.64	1.377	0.201	11.4	nd	nd	nd	16.3	70/75	60.00	46.56	66.00	bl re-run point to avoid FWF water quality is
09/25/07	14:27	5205.27	8.04	7.73	7.86	48.88	51.52	49.81	558.20	80.25	79.21	31.25	33.17	6.1%	31.96	270.10	56.83	55.79	0.865	0.078	3.4	4.6	4.4	1.2	17.6	70/75	60.00	46.05	64.98	bl
10/16/07	14:48	5375.85	7.93	6.61	7.77	48.87	51.76	49.99	470.6	84.56	83.08	31.21	33.36	6.9%	32.09	226.70	60.71	59.31	0.722	0.109	3.6	nd	nd	nd	18.5	70/75	60.00	41.48	66.00	bl re-run point to avoid FWF water quality is
09/26/07	17:05	5212.84	8.07	7.22	7.85	48.73	51.61	49.61	607.80	84.73	83.25	31.17	33.25	6.7%	31.87	295.10	60.73	59.35	0.692	0.054	3.2	4.3	4.3	1.3	16.5	70/75	60.00	40.40	65.23	bv
10/11/07	14:25	5326.13	7.76	6.26	7.64	49.31	52.03	50.26	518.8	90.25	87.35	31.55	33.29	5.5%	32.18	250.50	65.72	63.10	0.944	0.090	3.2	nd	nd	nd	24.5	70/75	60.00	35.70	58.71	bl re-run point to avoid FWF water quality is
10/12/07	9:28	5345.20	7.81	6.16	7.62	48.78	51.61	50.02	492.9	90.08	87.76	31.24	33.30	6.6%	32.14	238.00	65.74	63.58	0.952	0.172	7.2	nd	nd	nd	22.1	70/75	60.00	36.03	66.00	bl re-run point to avoid FWF water quality is
09/27/07	15:55	5221.52	8.05	7.03	7.8	48.74	51.60	49.73	668.50	90.59	88.48	31.23	33.26	6.5%	31.93	324.20	66.16	64.15	0.647	0.054	4.0	4.2	4.2	1.3	15.5	70/75	59.94	34.42	65.46	bv
												Most Affordable Point (MAP) Period																		
10/30/07	15:15	5470.73	7.98	6.89	7.79	48.66	50.51	49.38	533.10	83.31	81.09	30.90	32.38	4.8%	31.59	257.40	59.49	57.36	0.563	0.128	4.6	nd	nd	nd	5.9	70/75	54.17	37.88	62.23	bl
10/31/07	10:33	5488.11	7.91	6.41	7.73	48.78	50.82	49.53	514.10	84.12	81.58	31.23	32.73	4.8%	31.78	248.40	60.28	57.96	0.506	0.117	4.0	4.5	4.5	1.2	22.6	70/75	54.14	37.91	61.22	bl
11/01/07	10:31	5510.30	7.93	6.60	7.75	48.86	51.27	49.78	543.90	84.12	82.01	31.31	33.02	5.5%	31.99	263.20	60.32	58.37	0.38	0.106	3.2	nd	nd	nd	19.7	70/75	53.69	37.59	61.08	bl
11/02/07	10:29	5532.53	8.01	6.95	7.81	48.93	51.37	49.73	551.40	83.85	82.03	31.35	33.11	5.6%	31.95	266.90	60.12	58.41	0.385	0.105	3.2	4.4	4.5	1.3	16.5	70/75	53.70	37.85	60.88	bl
11/06/07	14:17	5556.91	7.94	6.85	7.73	48.87	51.90	50.01	560.80	84.77	82.83	31.53	33.44	6.1%	32.11	271.20	60.89	59.05	0.566	0.1	3.1	nd	nd	nd	13.2	70/75	53.73	37.46	60.04	bl
11/07/07	10:18	5574.92	7.86	6.53	7.68	48.77	51.78	49.76	533.70	84.30	82.41	31.23	33.39	6.9%	31.97	258.10	60.55	58.72	0.482	0.107	3.6	4.3	4.5	1.3	10.5	70/75	53.73	37.65	58.98	bl
11/08/07	9:37	5596.39	7.84	6.41	7.66	48.79	51.20	49.58	506.90	84.34	82.15	31.26	33.03	5.7%	31.82	244.90	60.55	58.51	0.465	0.106	3.2	nd	nd	nd	7.6	70/75	53.73	37.53	59.36	bl
11/09/07	13:30	5621.89	7.85	6.52	7.65	48.47	51.13	49.49	497.90	83.39	81.49	30.92	32.86	6.3%	31.71	240.30	59.63	57.79	0.399	0.099	3.2	nd	4.5	1.2	4.3	70/75	53.85	38.12	59.77	bl
11/12/07	14:43	5626.18	7.92	6.95	7.75	48.37	51.12	49.52	558.30	83.01	81.01	30.85	32.83	6.4%	31.63	269.80	59.29	57.39	0.776	0.113	3.7	4.5		1.3	24.0	70/75	53.85	38.26	57.76	bl
11/13/07	15:52	5651.33	7.90	6.61	7.71	48.21	51.27	49.31	513.40	82.69	80.98	30.71	32.92	7.2%	31.49	247.70	58.91	57.36	0.523	0.114	3.8	nd	nd	nd	20.9	70/75	53.82	38.75	63.06	bl
11/14/07	10:30	5668.26	7.83	6.39	7.66	48.76	51.40	49.61	497.50	83.09	81.26	31.04	33.04	6.4%	31.77	240.00	59.33	57.64	0.486	0.105	3.2	4.1	3.9	1.3	18.0	70/75	53.82	38.79	60.12	bl
11/15/07	8:34	5668.52	7.76	6.32	7.63	48.97	51.84	50.01	493.30	84.35	82.26	31.38	33.41	6.5%	32.09	238.40	60.54	58.54	0.431	0.103	2.9	nd	nd	nd	15.4	70/75	53.85	38.73	60.55	bl
11/16/07	10:07	5712.33	7.82	6.36	7.64	48.77	51.42	49.57	495.50	83.67	81.79	31.21	33.12	6.1%	31.81	239.30	60.02	58.17	0.398	0.102	2.9	4.0	3.9	1.3	9.6	70/75	53.85	38.32	61.88	bl
												Base Line Test																		
11/19/07	16:15	5719.24	7.93	7.16	7.76	48.94	51.52	49.74	617.20	80.16	78.35	31.30	33.21	6.1%	31.96	299.30	56.77	55.08	0.406	0.11	3.4	nd	nd	nd	8.3	70/75	44.89	36.33	55.32	bl
11/20/07	14:52	5741.85	8.04	7.73	7.85	48.93	51.09	49.62	651.10	80.49	78.41	31.32	32.91	5.1%	31.85	315.90	57.02	55.11	0.456	0.113	3.2	nd	nd	nd	5.6	70/75	44.86	35.33	58.25	bl
11/21/07	10:07	5761.11	7.94	7.35	7.78	48.81	51.08	49.59	626.50	80.01	78.03	31.27	32.91	5.2%	31.84	303.90	56.64	54.78	0.382	0.116	3.9	4.1	nd	1.5	23.1	70/75	44.88	35.63	61.51	bl
											MAP Average		33.02	6.0%		252.74						MAP Average		1.27					
											MAP Maximum		33.44	7.2%		271.20						MAP Maximum		1.30					
											MAP Minimum		32.38	4.8%		238.40						MAP Minimum		1.20					
Hydranautics membranes - SWC5												**Membrane Ripening Period**																		
11/28/07	3:05	5762.47	8.00	8.25	7.81	50.99	53.93	52.26	213.70	84.90	83.20	32.85	34.86	6.1%	33.67	101.30	61.21	59.41	0.934	0.144	5.3	nd	nd	nd	22.3	80/80	44.90	33.98	55.13	jm, hyd memb 1st point
11/29/07	15:25	5772.96	7.93	6.08	7.75	50.94	53.60	52.21	199.70	85.32	82.98	32.65	34.57	5.9%	33.47	94.27	61.36	59.74	0.633	0.077	4.5	nd	nd	nd	20.5	100/100	44.85	33.84	56.12	bv
11/30/07	14:30	5795.87	7.96	6.18	7.8	51.05	53.95	52.25	197.60	85.48	83.48	32.84	34.88	6.2%	33.69	92.93	61.54	59.62	0.473	0.071	4.5	4.9	4.7	0.72	16.5	80/80	44.85	33.81	59.95	bv
12/03/07	16:20	5803.76	7.95	6.20	7.79	51.36	53.57	52.17	212.60	85.45	83.02	33.05	34.62	4.8%	33.70	100.80	61.49	59.34	0.439	0.08	5.1	nd	nd	nd	15.5	80/80	44.88	33.49	56.08	bv
12/04/07	9:35	5821.21	7.89	6.01	7.73	48.73	50.78	49.44	200.10	80.56	78.47	31.19	32.71	4.9%	31.72	94.91	57.16	55.13	0.801	0.082	4.7	nd	nd	nd	12.8	80/80	44.88	33.63	58.67	bl
12/05/07	8:39	5842.23	7.88	5.99	7.74	51.38	53.65	52.13	197.80	85.30	83.08	33.09	34.73	5.0%	33.64	93.81	61.40	59.39	1.683	0.09	6.5	5.0	4.5	0.73	9.3	80/80	44.87	33.68	58.53	bl
12/06/07	9:25	5865.23	7.91	6.01	7.74	51.38	53.69	52.07	200.10	85.11	82.86	33.09	34.73	5.0%	33.61	94.84	61.24	59.19	1.456	0.088	4.5	nd	nd	nd	5.8	80/80	44.86	33.78	58.56	bl
12/07/07	8:43	5886.52	7.81	5.96	7.67	51.51	53.68	52.2	203.2	85.46	83.06	33.18	34.71	4.6%	33.68	96.49	61.60	59.37	0.738	0.072	3.6	4.9	4.8	0.76	22.6	80/80	44.87	33.38	59.43	bl
12/10/07	15:57	5893.98	7.83	5.98	7.66	50.91	53.39	52.05	215.9	85.08	82.79	32.75	34.49	5.3%	33.54	102.30	61.18	59.01	0.535	0.040	2	nd	nd	nd	21.4	80/80	44.88	33.72	56.05	bl
12/11/07	14:55	5916.95	7.81	5.93	7.67	50.81	53.29	52.03	204.8	84.96	82.78	32.66	34.41	5.4%	33.51	96.68	61.02	58.98	0.573	0.048	1.9	nd	nd	nd	17.7	80/80	44.89	33.54	59.24	bl
12/12/07	10:12	5934.55	7.88	6.05	7.71	51.39	53.68	52.23	205.5	85.27	83.05	33.09	34.75	5.0%	33.71	97.41	61.39	59.35	0.235	0.046	2.5	4.5	4.7	0.75	15.1	80/80	44.91	33.69	57.32	bl
12/13/07	9:32	5957.70	7.89	6.07	7.74	51.46	53.69	52.12	202.3	85.61	83.39	33.16	34.76	4.8%	33.64	96.04	61.71	59.66	0.266	0.045	2.4	nd	nd	nd	11.6	80/80	44.93	33.49	59.93	bl
12/14/07	9:03	5979.32	7.87	6.02	7.72	51.56	53.71	52.1	198.7	85.35	82.95	33.26	34.83	4.7%	33.65	94.38	61.55	59.27	0.485	0.051	2.9	4.7	4.6	0.75	8.1	80/80	44.94	33.49	57.81	bl
												12 Point flux and recovery Period																		
01/04/08	10:29	6044.24	7.87	6.11	7.71	51.19	53.58	52.14	243.2	83.41	81.24	32.96	34.66	5.2%	33.65	115.50	59.77	57.73	0.362	0.054	2.8				20.1	70/75	36.13	28.25	57.52	bl
01/08/08	13:39	6073.15	7.86	6.06	7.68	50.82	53.91	52.07	267.7	87.51	83.61	32.70	34.91	6.8%	33.59	127.70	63.43	59.86	2.958	0.049	2.8	4.4	5.4	0.87	16.5	70/75	36.12	25.37	51.67	bl
01/09/08	14:40	6098.28	7.80	6.09	7.60	50.43	53.19	51.44	289.5	91.96	83.57	32.21	34.22	6.2%	33.04	137.70	67.25	59.72	1.820	0.046	2.3	4.8	4.7	0.95	13.9	70/75	22.15	36.13	54.62	bv
01/10/08	9:34	6117.08	7.86	5.94	7.69	51.12	53.16	51.78	196.2	84.59	82.51	32.92	34.42	4.6%	33.41	93.24	60.80	58.86	1.696	0.044	2.3	4.5	4.6	0.71	11.5	70/75	45.35	33.52	62.75	bl
01/11/08	10:39	6140.48	7.83	5.92	7.66	50.92	53.96	51.71	212.7	89.34	87.16	32.78	34.93	6.6%	33.34	100.80	65.06	63.07	1.689	0.049	2.9	4.4	4.6	0.75	8.7	70/75	45.33	30.04	54.59	bl
01/15/08	10:04	6165.01	7.82	5.86	7.61	51.21	53.73	51.78	232.1	94.29	88.75	32.97	34.77	5.5%	33.39	110.30	69.56	64.49	1.622	0.044	2.7	5.4	5	0.77	6	70/75	45.35	26.52	57.19	bl
01/16/08	10:36	6187.46	7.82	5.81	7.65	50.96	53.56	51.64	165.7	85.17	83.46	32.79	34.65	5.7%	33.28	78.46	61.34	59.72	1.362	0.049	2.6	4.9	4.8	0.59	13.9	70/75	53.96	39.64	60.84	bl
01/17/08	9:00	6208.13	7.85	5.82	7.68	51.36	53.93	51.89	169.9	90.43	87.75	33.10	34.94	5.6%	33.51	80.77	66.14	63.61	1.789	0.051	2.7	4.7	4.6	0.60	11.2	70/75	54.06	34.92	58.45	bl
01/18/08	9:45	6229.53	7.79	5.79	7.60	51.11	53.99	51.76	182.5	95.49	91.59	32.90	34.93	6.2%	33.38	86.22	70.66	67.08	2.419	0.050	2.7	4.6	4.5	0.64	8.7	70/75	54.05	30.76	57.09	bl
01/23/08	9:28	6253.18	7.87	5.86	7.74	50.63	53.47	51.22	149.8	83.58	82.57	32.57	34.54	6.0%	33.02	70.85	60.01	58.94	1.372	0.059	2.8	6.7	5.2	0.57	6.1	70/75	59.82	45.21	65.92	bl
01/30/08	10:33	6292.08	7.92	5.92	7.72	50.87	53.32	51.42	168.1	89.06	86.87	32.74	34.49	5.3%	33.12	79.48	64.82	62.81	2.580	0.046	3.1	5.1	5.2	0.61	22.6	70/75	60.00	39.08	62.24	bl

01/31/08	9:24	6312.09	7.91	5.84	7.67	51.16	53.39	51.66	177.7	94.83	91.32	32.96	34.61	5.0%	33.32	84.28	70.11	66.85	2.683	0.045	2.6	5.1	4.9	0.64	20.5	70/75	60.00	34.01	59.29	bl
												Base Line Test																		
02/01/08	9:17	6334.14	7.87	5.93	7.73	51.18	53.31	51.66	200.7	85.13	82.91	32.97	34.55	4.8%	33.31	95.23	61.39	59.24	1.692	0.045	2.7	4.9	nd	0.74	18	70/75	44.86	33.40	55.41	bl
												Most Affordable Point (MAP) Period																		
02/05/08	2:31	6365.24	7.78	5.78	7.59	50.33	53.28	51.62	174.1	89.82	87.16	32.33	34.29	6.1%	33.08	81.95	65.37	62.88	3.942	0.037	2.5	nd	nd	nd	15.1	70/75	54.49	35.36	62.34	bl
02/06/08	4:43	6389.70	7.89	5.98	7.69	50.86	53.19	51.5	183.4	89.49	86.65	32.71	34.33	5.0%	33.13	86.49	65.17	62.61	2.692	0.046	2.8	nd	nd	nd	12.4	70/75	53.75	34.89	57.89	bl
02/07/08	10:39	6407.62	7.76	5.76	7.58	51.09	53.26	51.71	175.2	89.48	86.67	32.89	34.44	4.7%	33.34	82.96	65.21	62.64	2.022	0.044	2.7	nd	nd	nd	10.8	70/75	53.74	35.19	59.68	bl
02/08/08	11:15	6430.41	7.81	5.86	7.61	50.91	53.03	51.54	181.5	89.29	86.36	32.73	34.25	4.6%	33.19	85.91	65.05	62.36	1.010	0.051	2.7	nd	nd	nd	8.2	70/75	53.78	34.86	58.09	bl
02/12/08	9:12	6455.29	7.77	5.82	7.59	51.05	53.55	51.76	189.8	90.05	87.42	32.86	34.66	5.5%	33.37	89.91	65.71	63.29	2.455	0.051	3.8	nd	nd	nd	5.7	70/75	54.13	35.04	60.85	bl
02/13/08	11:00	6479.09	7.74	5.79	7.54	51.23	53.79	51.81	185.1	89.88	87.41	32.99	34.83	5.6%	33.41	87.81	65.59	63.29	1.828	0.049	3.1	nd	nd	nd	22.8	70/75	54.18	34.95	59.26	bl
02/14/08	11:37	6501.86	7.78	5.82	7.61	50.97	53.3	51.67	183.5	89.86	87.18	32.79	34.46	5.1%	33.31	86.82	65.53	63.09	1.811	0.051	3.3	nd	nd	nd	20.2	70/75	54.20	34.79	58.69	bl
02/15/08	9:22	6523.60	7.85	5.87	7.64	51.23	53.63	51.85	184.8	89.81	87.36	32.98	34.73	5.3%	33.46	87.61	65.49	63.25	1.307	0.050	3.3	nd	nd	nd	17.9	70/75	54.21	35.01	61.39	bl
02/19/08	0:00	6547.64	7.89	6.43	7.67	51.1	53.23	51.56	194.4	90.53	87.49	32.89	34.37	4.5%	33.24	92.05	66.14	63.17	0.792	0.048	3.5	nd	nd	nd	15	70/75	54.21	34.34	59.02	bv
02/20/08	10:21	6566.62	7.83	5.85	7.64	51.06	53.72	51.62	191.6	89.64	87.12	32.86	34.74	5.7%	33.27	90.82	65.35	63.04	0.743	0.045	2.8	nd	nd	0.7	13.3	70/75	54.20	34.98	61.37	bl
												MAP Average		5.2%		87.23														
												MAP Maximum		6.1%		92.05														
												MAP Minimum		4.5%		81.95														
												Base Line Test										nd	nd	nd						
02/21/08	9:27	6587.81	7.82	6.02	7.67	51.11	53.37	51.59	205.1	84.55	82.58	32.89	34.52	5.0%	33.27	97.16	60.74	58.95	0.880	0.046	2.9	nd	nd	nd	10.8	70/75	44.94	33.87	56.11	bl
02/22/08	10:09	6612.11	7.85	5.97	7.69	50.78	53.04	51.45	199.4	84.15	81.82	32.67	34.28	4.9%	33.14	94.44	60.41	58.27	2.617	0.045	3.5	nd	nd	0.76	8	70/75	45.33	33.90	59.02	bl
DOW-FILMTEC membranes - Hybrid												**Membrane Ripening Period**																		
02/27/08	11:38	6632.19	7.83	6.91	7.68	50.72	53.09	51.59	530.5	83.84	81.88	32.64	34.27	5.0%	33.22	256.50	60.08	58.29	1.631	0.048	3				6	70/75	44.91	33.81	55.96	bl
02/28/08	9:37	6654.18	7.86	6.47	7.69	51.01	53.14	51.55	533.4	84.61	82.38	32.83	34.35	4.6%	33.22	257.80	60.84	58.77	1.516	0.046	2.8				3.8	70/75	44.96	33.23	58.17	bl
02/29/08	10:00	6676.80	7.76	6.45	7.61	50.94	53.19	51.59	550.1	84.36	82.26	32.79	34.37	4.8%	33.25	266.10	60.55	58.65	1.285	0.045	2				21.8	70/75	44.97	33.52	56.34	bl
03/04/08	9:42	6699.74	7.78	6.41	7.65	51.03	53.65	51.68	567.5	83.76	82.05	32.84	34.69	5.6%	33.31	274.60	60.05	58.46	1.527	0.050	2.8				19.2	70/75	44.96	34.39	59.97	bl
03/05/08	9:49	6721.78	7.80	6.32	7.66	51.02	53.31	51.68	566.7	84.33	82.25	32.85	34.45	4.9%	33.31	273.80	60.53	58.65	1.202	0.052	3.1				16.6	70/75	44.97	33.49	56.43	bl
03/06/08	10:06	6746.06	7.79	6.37	7.63	51.03	53.84	51.77	561.1	84.14	82.35	32.83	34.82	6.1%	33.38	271.60	60.39	58.72	1.258	0.050	3				14	70/75	44.97	34.31	59.08	bl
03/07/08	10:48	6768.77	7.81	6.44	7.66	50.91	53.14	51.47	577.6	84.57	82.39	32.74	34.34	4.9%	33.16	279.60	60.75	58.77	0.819	0.056	3.6				11.7	70/75	44.94	33.42	56.38	bl
03/11/08	10:40	6794.70	7.81	6.32	7.65	51.23	53.49	51.98	592.7	85.04	82.87	32.99	34.57	4.8%	33.51	287.10	61.17	59.17	1.208	0.048	3.2				8.2	70/75	44.97	33.49	56.47	bl
03/12/08	13:50	6820.87	7.78	6.33	7.63	51.26	53.56	51.9	579.5	85.19	83.07	33.01	34.61	4.8%	33.43	280.70	61.30	58.38	1.545	0.048	3.6				5.8	70/75	45.00	33.55	59.65	bv
03/13/08	12:30	6842.52	7.68	6.03	7.57	51.16	53.77	51.95	579.7	85.07	82.97	32.94	34.75	5.5%	33.48	280.30	61.18	59.23	1.808	0.047	3.5				9.5	70/75	44.97	33.25	57.33	bv
03/18/08	11:11	6884.90	7.67	5.96	7.53	51.33	54.18	52.19	558.3	85.34	83.32	33.06	35.07	6.1%	33.66	270.20	61.45	59.61	1.733	0.043	2.9				5	70/75	44.99	34.28	62.45	bl
												12 Point flux and recovery Period																		
03/19/08	11:07	6907.13	7.59	5.95	7.51	51.54	53.95	52.04	693.1	82.72	80.73	33.21	34.93	5.2%	33.57	336.60	59.07	57.26	1.265	0.044	2.7				22.8	70/75	35.77	29.06	53.43	bl
03/20/08	10:22	6930.38	7.65	6.06	7.55	51.48	53.92	52.09	721.7	86.29	82.03	33.16	34.89	5.2%	33.61	350.90	62.32	58.43	1.829	0.043	2.8				20.4	70/75	35.77	26.16	55.32	bl
03/21/08	9:42	6952.07	7.71	6.05	7.53	51.39	53.99	52.22	811.1	92.18	83.02	33.10	34.95	5.6%	33.69	396.10	67.65	59.32	1.038	0.046	3.4				18	70/75	35.77	22.03	51.47	bl
03/25/08	10:18	6977.99	7.71	6.05	7.56	51.46	53.89	52.14	578.4	85.24	83.05	33.14	34.87	5.2%	33.63	280.20	61.36	59.36	0.796	0.046	3.6				15.6	70/75	44.82	33.84	58.11	bl
03/26/08	10:10	7000.10	7.77	6.19	7.59	51.37	53.87	52.01	627.9	88.83	86.01	33.09	34.85	5.3%	33.53	303.90	64.63	62.05	0.726	0.052	4.6				13.2	70/75	44.79	30.15	55.47	bl
04/08/08	9:52	7138.88	7.73	6.06	7.56	51.47	53.68	52.12	663.1	94.21	87.53	33.16	34.72	4.7%	33.62	321.90	69.48	63.41	3.566	0.043	4.9				19.4	70/75	45.26	26.57	58.62	bl
03/27/08	10:22	7024.29	7.78	6.16	7.58	51.53	53.98	52.21	649.4	93.64	88.14	33.20	34.94	5.2%	33.67	315.20	68.95	63.98	1.703	0.053	4.8				10.8	70/75	44.79	26.75	59.07	bl
04/01/08	13:40	7060.61	7.93	6.34	7.74	51.57	54.5	52.28	511.8	85.48	83.93	33.22	35.34	6.4%	33.78	247.40	61.70	60.23	0.673	0.050	7.2				6.8	70/75	54.02	40.66	64.66	bv, sdi 10 min
04/04/08	12:13	7115.72	7.86	6.33	7.67	51.47	53.55	52.03	530.4	90.11	86.88	33.15	34.62	4.4%	33.56	256.40	65.77	62.83	0.698	0.047	7.1				21.8	70/75	53.99	34.88	64.09	bl, SDI 10 min
04/09/08	10:19	7161.11	7.71	6.01	7.51	51.63	53.98	52.32	533.1	95.64	90.19	33.27	34.95	5.0%	33.76	257.70	70.81	65.83	2.206	0.043	4.6				17	70/75	53.85	30.56	61.91	bl
04/10/08	9:44	7182.91	7.71	5.96	7.49	51.54	53.92	52.19	581.4	101.7	93.19	33.19	34.89	5.1%	33.67	281.80	76.29	68.52	1.357	0.045	4.4				14.7	70/75	53.91	26.98	59.11	bl
04/11/08	9:55	7205.52	7.70	5.89	7.55	51.48	54.16	52.37	435.4	86.11	84.82	33.16	35.06	5.7%	33.77	209.30	62.19	60.97	0.874	0.047	4.6				12.2	70/75	60.00	43.68	66.00	bl
04/16/08	9:37	7235.45	7.78	6.04	7.62	51.71	54.35	52.37	463.3	89.76	87.59	33.32	35.23	5.7%	33.79	223.20	65.49	63.48	0.648	0.049	4.7				9.4	70/75	60.00	39.61	66.00	bl
04/17/08	8:18	7255.53	7.81	6.03	7.61	51.77	54.47	52.42	490.9	95.35	92.28	33.36	35.36	6.0%	33.83	237.00	70.53	67.71	0.644	0.055	4.6				6.5	70/75	60.00	34.54	64.45	bl
04/18/08	9:34	7278.52	7.79	6.29	7.66	51.72	53.92	52.41	585.7	85.22	82.98	33.32	34.91	4.8%	33.83	283.80	61.38	59.32	0.569	0.058	4.8				5.1	70/75	45.00	33.81	60.64	bl

Quarterly Technical Progress Report
Covering Period April 1, 2008 to June 30, 2008
Date of Report 7-24-08

Agreement Number:	4600007440
DWR ID Number:	n/a Department of Water Resources Office of Water Use Efficiency 901 P Street, Third Floor Sacramento, CA 95814
Project Title:	Optimizing Seawater Reverse Osmosis for Affordable Desalination
Recipient Organization:	Affordable Desalination Collaboration 2419 E. Harbor Blvd, #173 Ventura, CA 93001
Partners:	See attached membership list.
Contact Person:	John MacHarg 2419 E. Harbor Blvd, #173 Ventura, CA 93001 Tel: 650-283-7976 Fax: 805-658-8060 e-mail: jmacharg@affordabledesal.com
Date Submitted:	7-24-08

Signed, Reviewed by designated representative

1. **Project Objective:** The objectives of the Affordable Desalination Collaboration (ADC) are to demonstrate affordable, reliable and environmentally responsible reverse osmosis desalination technologies and to provide a platform by which cutting edge technologies can be tested and measured for their ability to reduce the overall cost of the seawater reverse osmosis (SWRO) treatment process.

2. **Project Description / Background:** A key challenge facing the seawater desalination industry today is to develop a new generation of reverse osmosis (RO) plants that deliver high-quality, fresh water at a reduced economic and environmental cost. The key to achieving these goals is to address the most expensive and environmentally taxing component of operating a desalination system: energy.

The ADC was formed in 2004 to fund and execute the first part of a multiple phase Affordable Desalination Demonstration Project. The ADC members are a group of leading government agencies, municipalities, RO manufacturers, consultants and professionals partnering together to help reduce the costs associated with desalination.

The first phase of the project, ADC I, built and operated a demonstration plant at the United States Navy's Seawater Desalination Test Facility in Pt. Hueneme, California. The plant utilized a combination of proven technologies developed primarily in the U.S. and California to demonstrate that seawater desalination can be optimized to make it technically and economically viable. ADC I achieved remarkable results by desalinating seawater at energy levels between 6.0-6.9 kWh/kgal (1960-2250 kWh/acre-ft). On average, these numbers make the power for desalination comparable to the power required for the State Water and the Colorado River Aqueduct projects and they are approximately 35% lower than experts had been projecting for seawater desalination. For the approximate 100 mgd of proposed seawater desalination projects in Southern California alone, this 35% savings equates to approximately 140,000 Mega Watt hours in energy savings per year.

This second phase (ADC II) will pursue the following demonstration, and development programs.

a. Test and demonstrate additional manufacturers' membranes through a protocol similar to Phase I.
b. Test and demonstrate DOW FILMTEC's next generation "hybrid-membrane".
c. Develop and demonstrate new process designs that are possible as a result of the isobaric energy recovery technologies. We will use the ADC pilot system to test and demonstrate these new flow schemes in order to push the recoveries above 50%, while still maintaining good water quality and low energy performance.
d. Test and demonstrate ZENON ultra-filtration technology ahead of our ADC pilot system. This portion of the test should build on and compliment the other pre-filtration studies that are taking place in the region.
e. Test and demonstrate Ocean Pacific Technology's (OPT) Axial Piston Pressure Exchanger (AP^2X) pump technology.

Thus far we have completed the four sets of manufacturers' membrane testing that including the Toray TM800C membrane test and retest (Task 2 and 6), the Koch 2822HF-400 membrane test (Task 3) and the Hydranautics SWC5 membrane (Task 4) and the DOW-FIMTEC Hybrid (Task 5). In addition we have also completed the installation and start up of the ZENON pre-filtration skid. From July 1 through approximately September 30 of Q3-08 the Naval Facilities

Engineering Service Center will ask us not to operate due to their intake capacity being taken up by their higher priority Navy testing.

- Start Date of Contract: April 2, 2007
- End Date of Contract: March 22, 2009

3. Progress and Status:

The second quarter of 2008 was mostly spent proceeding through the test protocol with minimal delay. We completed the both the DOW FILMTEC Hybrid membrane test and Toray TM800E-400 membrane re-test slightly ahead of schedule. In addition we started the Zenon pre-filtration system.

A table comparing the most affordable points of all the membranes tested thus far including 3 sets of FILMTEC (tested in ADC I), Toray, Koch, FILMTEC ISD-Hybid and Hydranautic's is provided below.

Most Affordable Point Performance and Data

Mfgr	Rec %	Flux gfd	RO Process kWh/m3 (kWh/kgal)	TDS mg/l	Boron mg/l	Total Treatment Costs $/acre-ft (3)	Temp ºF	Feed ktds
FILMTEC (1) SW30HR-380	50	7.5	7.75	129	0.65	978	63	34.69
FILMTEC (1) SW30XLE-400i	49	9.0	6.92	231	1.12	922	57	34.69
FILMTEC (1) SW30HRLE-400i	49	7.5	7.54	148	0.85	968	54	35.29
Koch TFC 2822HF-400	50	8.9	7.32	307	1.4	934	63	34.91
Hydranautics SWC5	49	10.0	7.78	84	0.64	945	56	36.16
FILMTEC ISD-Hybrid	51	9.0	7.56	258	1.0	948	54	36.62
Toray TM800E-400	51	7.5	7.40	158	0.71	958	62	36.41

Notes: 1. Data from ADC I test where FILMTEC membranes were used exclusively. 2. The testing was performed consecutively through varying water quality conditions and should not be considered as side by side testing. The following results provide an approximate bench mark for SWRO energy consumption for Southern California and reveal general trends in membrane performance.

4. Percent Complete of Total Project: ~ 46 %

5. Deliverables:

Trade Show/Conference/Publication	Date(s)	Author(s)	Presenter	DWR Submittal
IDA World Conference, Gran Canaria, ADC II Update	October 21-26, 2007	Stephen Dundorf, Thomas F. Seacord, John MacHarg	Stephen Dundorf	Q3-07
Desalination and Water Reuse (DWR) Quarterly, Innovative Designs to be Tested in ADC II	Aug/Sept-07	John P. MacHarg	n/a	Q3-07
AMTA 2007 Annual Conference, Las Vegas, ADC I 10 mgd Application	July 23-27, 2007	Bradley Sessions, Tom Seacord, P.E.	Tom Seacord	Q2-07
AWWA Membrane Technology Conference, Tampa Florida, Collier County results	March 18-21, 2007	Brandon Yallaly, P.E., Tom Seacord, P.E., Steve Messner	Brandon Yallaly	Q2-07
ADC Completes Profile of SWRO Press Release	March 28, 2008	ADC	n/a	Q1-08

The ADC is also planning to hold a joint workshop with the American Membrane Technology Association (AMTA) at the joint AMTA-SEDA Conference, July 14, 2008 in Naples, Florida. The primary purpose of this workshop will be to present the results from our membrane testing (ADC I plus Tasks 2-6). In addition, an article will be published in the Desalination and Water Reuse Quarterly magazine covering the same material.

6. Expenditures:

Affordable Desalination Collorboration
State of California Water Board Report
Quarter ending March 31, 2008

	Budgetary Category	Balances March 31, 2008			Q 2 Expenditures			Balances June 30,2008		
		Non State Share	State Share (Grant)	Total Project Costs	Non State Share	State Share (Grant)	Total Project Costs	Non State Share	State Share (Grant)	Total Project Costs
	(I)	(II)	(III)	(IV) = (II+III)	(II)	(III)	(IV) = (II+III)	(II)	(III)	(IV) = (II+III)
(a)	Administration									
	Salaries, wages	$ -	$ 116,613	$ 116,613		$ 49,500	$ 49,500	$ -	$ 67,113	$ 67,113
	Fringe benefits	$ -	$ 20,030	$ 20,030		$ 15,987	$ 15,987	$ -	$ 4,043	$ 4,043
	Supplies	$ -	$ 39,131	$ 39,131		$ 166	$ 166	$ -	$ 38,965	$ 38,965
	Equipment	$ -	$ 6,000	$ 6,000			$ -	$ -	$ 6,000	$ 6,000
	Consulting services	$ 22,500	$ 47,000	$ 69,500			$ -	$ 22,500	$ 47,000	$ 69,500
	Travel	$ -	$ 13,735	$ 13,735		$ 1,709	$ 1,709	$ -	$ 12,026	$ 12,026
(b)	Planning/design/engineering	$ (10,500)	$ 14,404	$ 3,904	$ -		$ -	$ (10,500)	$ 14,404	$ 3,904
(c)	Equipment purchases/Rentals/Rebates/Vouchers	$ 129,250	$ 19,000	$ 148,250	$ 125,000		$ 125,000	$ 4,250	$ 19,000	$ 23,250
(d)	Materials/Installation/Implementation	$ 69,000	$ 11,903	$ 80,903			$ -	$ 69,000	$ 11,903	$ 80,903
(e)	Implementation verification	$ 7,500	$ 8,000	$ 15,500			$ -	$ 7,500	$ 8,000	$ 15,500
(f)	Project legal/License/Insurance fees	$ -	$ 45,000	$ 45,000			$ -	$ -	$ 45,000	$ 45,000
(g)	Structures	$ -	$ -	$ -			$ -	$ -	$ -	$ -
(h)	Land Purchase/Easement	$ -	$ -	$ -			$ -	$ -	$ -	$ -
(i)	Environmental Compliance/Mitigation/Enhancement	$ -	$ -	$ -			$ -	$ -	$ -	$ -
(j)	Construction	$ -	$ -	$ -			$ -	$ -	$ -	$ -
(k)	Other (Operating Cash)	$ 335,000	$ -	$ 335,000			$ -	$ 335,000	$ -	$ 335,000
(l)	Operation, monitoring and assessment	$ -	$ 160,469	$ 160,469		$ 41,266	$ 41,266	$ -	$ 119,203	$ 119,203
(m)	Report preparation	$ 2,000	$ 2,500	$ 4,500			$ -	$ 2,000	$ 2,500	$ 4,500
(n)	Outreach and information sharing	$ 85,936	$ -	$ 85,936	$ 26,874		$ 26,874	$ 59,062	$ -	$ 59,062
(o)	Subtotal	$ 640,686	$ 503,784	$ 1,144,470	$ 151,874	$ 108,628	$ 260,502	$ 488,812	$ 395,156	$ 883,968
(p)	Overhead (8%)		$ 136,599	$ 136,599		$ 8,690	$ 8,690		$ 127,908	$ 127,908
(q)	Contingency (10%)		$ 30,379	$ 30,379		$ -			$ 30,379	$ 30,379
(r)	Total (o+p+q)	$ 640,686	$ 670,762	$ 1,311,448	$ 151,874	$ 117,318	$ 269,192	$ 488,812	$ 553,444	$ 1,042,255

7. **Schedule Status:** Through Q2-08 we have been operating on schedule.

8. **Plans for Next Quarter:** The ADC will be off-line for most of Q3-08 due to the Naval Facilities Engineering Service Center's intake capacity being taken up by their higher priority Navy testing.

9. **Attachments:** n/a

All quarterly reports should be publicly disclosable and not contain confidential, proprietary or business sensitive information.

Task and % Complete Progress Table

Agreement Number	Starting Date:	Completion Date:	Quarter-Year	Report Number	PERCENT OF
4600007440	4.2.07	2.4.10	Q2-2008	5	
Grantee Agency Name: Affordable Desalination Collaboration		% Time Elapsed 44%	Total Grant Funds used $ 446,557	Grant funds this Quarter $ 117,319	
Name of Project: Optimizing Seawater Reverse Osmosis for Affordable Desalination					

TASKS	YEAR	2007		2008				Project	Task Complete Last Report	Task Complete This Report	Project Complete
	MONTH	Qtr 3	Qtr 4	Qtr 1	Qtr 2	Qtr 3	Qtr 4				
Task 1: Zenon 1000 pilot demonstration								12	5	10	2
Task 2: Toray low energy membrane demonstration			Complete					8	0	0	8
Task 3: Koch low energy membrane demonstration				Complete				12	0	0	12
Task 4: Hydranautics low energy membrane demonstration					Complete			8	0	0	8
Task 5: Dow-FILMTEC hybrid membrane demonstration						Complete		8	40	60	8
Task 6: TorayTM800C low energy membrane demonstration (re-test)						Complete		8	0	100	8
Task 7: DOW FILMTEC high Boron rejection memb. demonstration								8	0	0	0
Task 8: Koch high rejection memb. demonstration								8	0	0	0
Task 9: Unbalanced PX high recovery testing								10	0	0	0
Task 10: Interstage-PX hybrid high recovery testing								10	0	0	0
Task 11: Demonstrate OPT's APX pump and energy recovery system								8	0	0	0
Show Progress by Use of Bar Chart	**Scheduled =**							100			
	Completed =										46

Notse: 1. Since we have been operating significantly under budget, we have proposed (2/10/08) and received preliminary approval to add tasks 6, 7, 8, and 11 to the task list. These additional items will extend the project schedule from the current December 2008 end date through Feb- 2010. The additional tasks and subsequent extension to the schedule will not result in an increase to the State Share/grant ie. no cost extension.

Schedule

Proposed/Draft Project Schedule

ID	Task Name	Duration	Start	Finish
1	Agreement development	168 days	Tue 8/1/06	Thu 3/22/07
2	Final agreement signed	5 days	Fri 3/23/07	Thu 3/29/07
3	Project begins	1 day	Mon 4/2/07	Mon 4/2/07
4	**TorayTM800C low energy membrane demonstration**	**51 days**	**Mon 4/30/07**	**Mon 7/9/07**
5	Install Toray TM800C Membranes	2 days	Mon 4/30/07	Tue 5/1/07
6	TM800C Ripening period	15 days	Wed 5/2/07	Tue 5/22/07
7	TM800C 9 flux and recovery points	18 days	Wed 5/23/07	Fri 6/15/07
8	TM800C Most affordable point	15 days	Mon 6/18/07	Fri 7/6/07
9	Complete Toray TM800C testing	1 day	Mon 7/9/07	Mon 7/9/07
10	Submit project update report to DWR	5 days	Mon 7/9/07	Fri 7/13/07
11	**Koch low energy membrane demonstration**	**88 days**	**Tue 7/10/07**	**Thu 11/8/07**
12	Install membranes	2 days	Tue 7/10/07	Wed 7/11/07
13	Ripening period	20 days	Thu 7/12/07	Wed 8/8/07
14	9 flux and recovery points	30 days	Thu 8/9/07	Wed 9/19/07
15	Most affordable point	35 days	Thu 9/20/07	Wed 11/7/07
16	Complete Koch testing	1 day	Thu 11/8/07	Thu 11/8/07
17	Submit project update report to DWR	5 days	Mon 9/17/07	Fri 9/21/07
18	Innovative PX flow schemes work shop	2 days	Thu 11/8/07	Fri 11/9/07
19	**Hydranautics low energy membrane demonstration**	**78 days**	**Fri 11/9/07**	**Tue 2/26/08**
20	Install membranes	2 days	Fri 11/9/07	Mon 11/12/07
21	Ripening period	20 days	Tue 11/13/07	Mon 12/10/07
22	9 flux and recovery points	25 days	Tue 12/11/07	Mon 1/14/08
23	Most affordable point	30 days	Tue 1/15/08	Mon 2/25/08
24	Complete Hydranautics testing	1 day	Tue 2/26/08	Tue 2/26/08
25	Submit project update report to DWR	4 days	Mon 1/21/08	Thu 1/24/08
26	**Zenon 1000 Pilot Demonstration**	**281 days**	**Mon 3/3/08**	**Mon 3/30/09**
27	Install and test Zenon System	18 days	Mon 3/3/08	Wed 3/26/08
28	Operate and monitor Zenon 1000 membrane pilot system	262 days	Thu 3/27/08	Fri 3/27/09
29	Complete Zenon testing	1 day	Mon 3/30/09	Mon 3/30/09
30	Submit project update report to DWR	4 days	Mon 3/17/08	Thu 3/20/08
31	**DOW Hybrid Membrane Demonstration**	**49 days**	**Wed 2/27/08**	**Mon 5/5/08**
32	Install DOW hybrid membranes	2 days	Wed 2/27/08	Thu 2/28/08
33	DOW Hybrid Ripening period	15 days	Wed 2/27/08	Tue 3/18/08
34	DOW Hybrid 9 flux and recovery points	18 days	Wed 3/19/08	Fri 4/11/08
35	DOW Hybrid Most affordable point	15 days	Mon 4/14/08	Fri 5/2/08
36	Complete DOW testing	1 day	Mon 5/5/08	Mon 5/5/08
37	Submit project update report to DWR	4 days	Mon 6/16/08	Thu 6/19/08
38	***TorayTM800C low energy membrane demonstration (re-test)***	***51 days***	***Tue 5/6/08***	***Tue 7/15/08***
39	***Install Toray TM800C Membranes***	***2 days***	***Tue 5/6/08***	***Wed 5/7/08***
40	***TM800C Ripening period***	***15 days***	***Thu 5/8/08***	***Wed 5/28/08***
41	***TM800C 12 flux and recovery points***	***18 days***	***Thu 5/29/08***	***Mon 6/23/08***
42	***TM800C Most affordable point***	***15 days***	***Tue 6/24/08***	***Mon 7/14/08***
43	***Complete Toray TM800C testing***	***1 day***	***Tue 7/15/08***	***Tue 7/15/08***

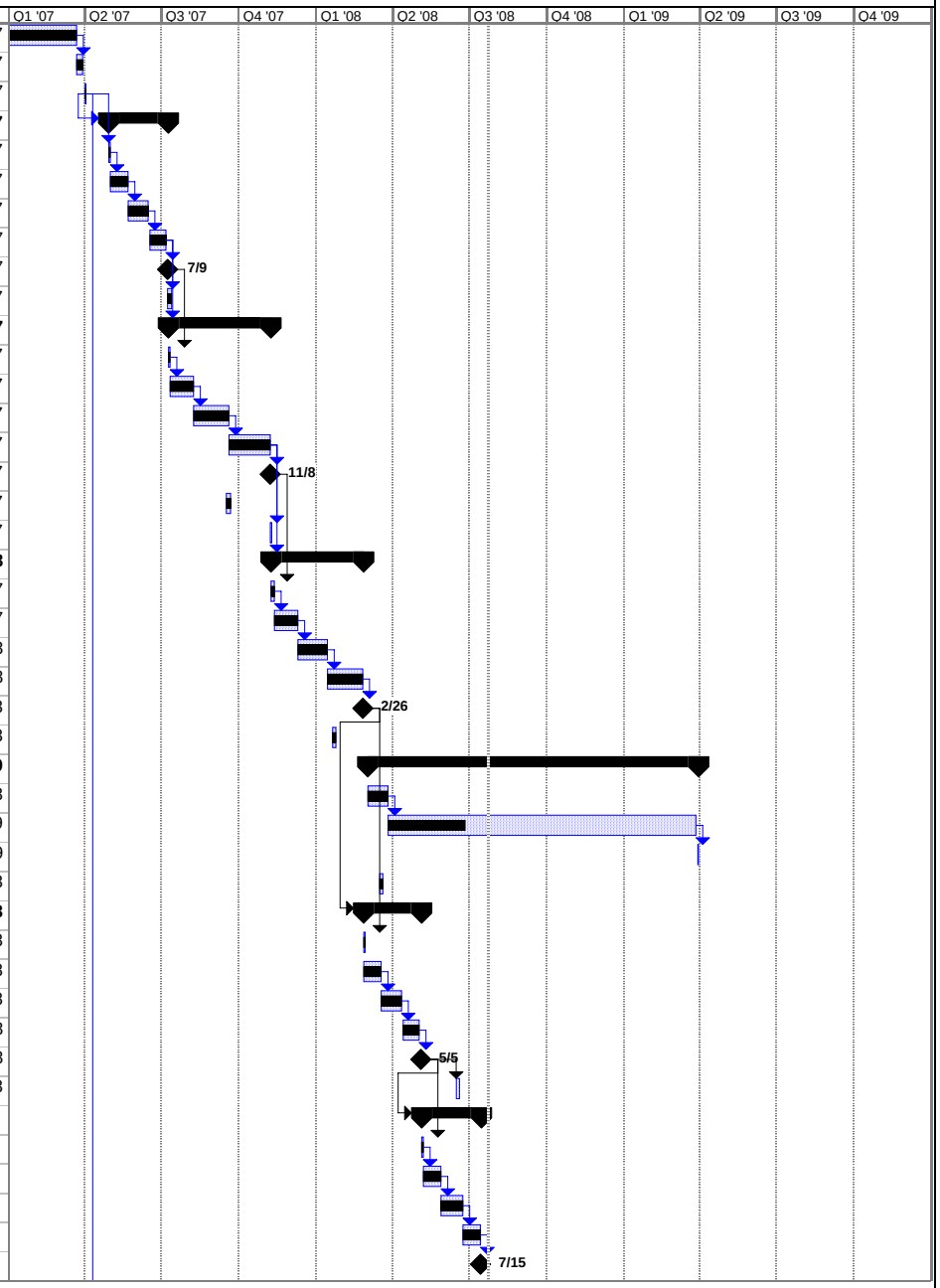

Project: ADC Proposed Project Schedu
Date: Wed 7/23/08

Task		Summary		Rolled Up Progress		Project Summary	
Progress		Rolled Up Task		Split		Group By Summary	
Milestone		Rolled Up Milestone		External Tasks		Deadline	

Proposed/Draft Project Schedule

ID	Task Name	Duration	Start	Finish
44	NFESC shutdown due to intake capacity issues	57 days?	Mon 7/14/08	Tue 9/30/08
45	***DOW FILMTEC high Boron rejection memb. demonstration***	***51 days***	***Wed 10/1/08***	***Wed 12/10/08***
46	***Install DOW FILMTEC SW30XHR-400i Membranes***	***2 days***	***Wed 10/1/08***	***Thu 10/2/08***
47	***DOW FILMTEC SW30XHR-400 Ripening period***	***15 days***	***Fri 10/3/08***	***Thu 10/23/08***
48	***DOW FILMTEC SW30XHR-400 12 flux and recovery points***	***18 days***	***Fri 10/24/08***	***Tue 11/18/08***
49	***DOW FILMTEC SW30XHR-400 Most affordable point***	***15 days***	***Wed 11/19/08***	***Tue 12/9/08***
50	***Complete FILMTEC SW30XHR-400 testing***	***1 day***	***Wed 12/10/08***	***Wed 12/10/08***
51	Submit project update report to DWR	4 days	Fri 8/15/08	Wed 8/20/08
52	ADC-AMTA Member workshop and progress report	1 day	Mon 7/14/08	Mon 7/14/08
53	***Koch high rejection memb. demonstration***	***51 days***	***Thu 12/11/08***	***Thu 2/19/09***
54	***Install Koch Membranes***	***2 days***	***Thu 12/11/08***	***Fri 12/12/08***
55	***Koch Ripening period***	***15 days***	***Mon 12/15/08***	***Fri 1/2/09***
56	***Koch 12 flux and recovery points***	***18 days***	***Mon 1/5/09***	***Wed 1/28/09***
57	***Koch Most affordable point***	***15 days***	***Thu 1/29/09***	***Wed 2/18/09***
58	***Complete Koch testing***	***1 day***	***Thu 2/19/09***	***Thu 2/19/09***
59	Order long lead interstage-PX hybrid items	45 days	Fri 2/20/09	Thu 4/23/09
60	Submit project update report to DWR	4 days	Thu 1/15/09	Tue 1/20/09
61	**Unbalanced PX high recovery testing**	**76 days**	**Fri 2/20/09**	**Fri 6/5/09**
62	Install PX flow scheme membrane set	2 days	Fri 2/20/09	Mon 2/23/09
63	Flush and base line membranes	10 days	Tue 2/24/09	Mon 3/9/09
64	Execute unbalance test protocol @ 9 points	18 days	Tue 3/10/09	Thu 4/2/09
65	PX unbalanced most affordable point (24/7 for 2 months)	45 days	Fri 4/3/09	Thu 6/4/09
66	Clean membranes	2 days	Fri 5/1/09	Mon 5/4/09
67	Complete Unbalanced PX testing	1 day	Fri 6/5/09	Fri 6/5/09
68	Submit project update report to DWR	4 days	Mon 3/16/09	Thu 3/19/09
69	**Interstage-PX hybrid high recovery testing**	**86 days?**	**Fri 6/5/09**	**Fri 10/2/09**
70	Reconfigure system for Interstage-PX hybrid design	10 days	Fri 6/5/09	Thu 6/18/09
71	Execute interstage-PX hybrid protocol 18 points	30 days	Fri 6/19/09	Thu 7/30/09
72	Interstage-PX hybrid most affordable point (24/7 for 2 months)	45 days	Fri 7/31/09	Thu 10/1/09
73	Clean membranes	2 days	Fri 8/28/09	Mon 8/31/09
74	Complete Interstage-PX Hybrid testing	1 day?	Fri 10/2/09	Fri 10/2/09
75	Submit project update report to DWR	4 days	Mon 6/15/09	Thu 6/18/09
76	***Demonstrate OPT's APX pump and energy recovery system***	***55 days***	***Mon 10/5/09***	***Fri 12/18/09***
77	***Reconfigure system with APX pump and ER unit***	***10 days***	***Mon 10/5/09***	***Fri 10/16/09***
78	***Operate system through 40 hour "break-in" period***	***5 days***	***Mon 10/19/09***	***Fri 10/23/09***
79	***Demonstrate APX technology 24/5 for cumulative 500 hrs***	***25 days***	***Mon 10/26/09***	***Fri 11/27/09***
80	***Complete APX demonstration***	***15 days***	***Mon 11/30/09***	***Fri 12/18/09***
81	Submit project update report to DWR	4 days	Mon 8/17/09	Thu 8/20/09
82	Complete ADC Prop 50 testing	1 day	Mon 12/21/09	Mon 12/21/09
83	Write final report	30 days	Mon 12/21/09	Fri 1/29/10
84	Submit final report, billing, conclude project	2 days	Mon 2/1/10	Tue 2/2/10
85	Member/general workshop and publish results	2 days	Wed 2/3/10	Thu 2/4/10
86	Project Duration	743 days	Tue 4/3/07	Thu 2/4/10

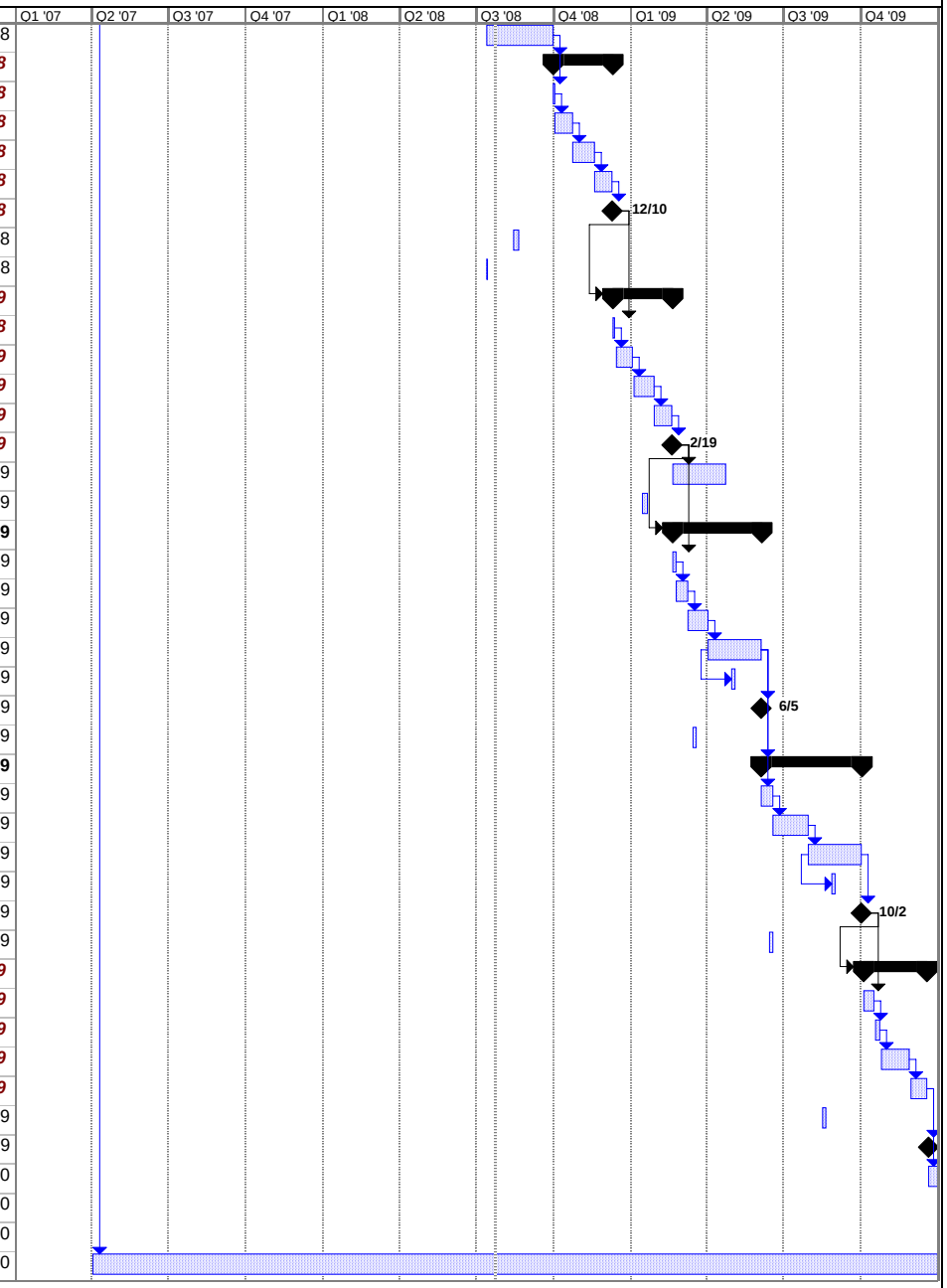

Project: ADC Proposed Project Schedu
Date: Wed 7/23/08

Task		Summary		Rolled Up Progress		Project Summary	
Progress		Rolled Up Task		Split		Group By Summary	
Milestone		Rolled Up Milestone		External Tasks		Deadline	

Attachments

1. Water Quality, Flow and Pressure and Power Data

TIME			CALCULATED PARAMETERS			TEMP	PRESSURES										FLOWS				MAIN PANEL KW METER				VFD KW METER			
		Operation	RO	Flux	Power		P_{MF-in}	P_{MF-out}	P_{CF-in}	P_{CF-out}	$P_{PX-Feed\ In}$	$P_{PX-conc\ out}$	$P_{PX-boost\ suct}$	P_{F-SYS}	P_{C-SYS}	P_{P-SYS}	$Q_{F-HP\ Pump}$	$Q_{PX\ Pump}$	$Q_{Feed\ PX-In}$	Q_{P-SYS}	A_{sys}	P HP/PX	P booster	Power	PX power	HP Power	Feed Pump	
Date	Time	Time	Recovery %	Gfd	kWh/m3	Influent	(psi)	(psi)	(psi)	(psi)	(psi)	(psi)	(psi)	(psi)	(psi)	(psi)	(gpm)	(gpm)	(gpm)	(gpm)	amp	(kw)	(kw)	Factor	(kw)	(kw)	(kw)	Notes
MM/DD/YY	hh:mm	hh.hh				Temp F	1	2	3	4	5	6	7	8	9	10	11	12	13	14	15	16	17	18	19	20	21	
Toray membranes - TM800E-400										**Membrane Ripening Period**																		
5/30/2007	11:15	4151.28	42.3%	7.47	1.90	57.0	51.2	39.4	38.8	33.9	34.7	27.7	800	818	808	2.9	44.0	57.95	59.56	43.6	25.00	18.85	nd	0.900	0.90	17.00	5.00	
6/5/2007	11:30	4198.44	43.0%	7.46	1.87	58.0	51.2	38.4	37.8	32.9	34.0	27.1	790	807	798	2.5	44.0	57.60	57.60	43.5	24.50	18.48	nd	0.900	0.85	16.50	4.95	
6/6/2007	10:15	4218.73	42.6%	7.47	1.90	58.0	51.1	40.5	39.8	38.6	35.6	28.6	790	807	800	2.7	44.0	58.24	58.75	43.6	24.40	18.80	nd	0.900	0.85	16.50	4.93	bl
6/7/2007	9:25	4239.52	42.6%	7.46	1.87	58.0	51.2	40.7	40.0	38.8	33.7	27.1	795	815	802	2.5	43.5	57.80	58.70	43.5	24.40	18.50	nd	0.900	0.85	16.60	4.93	bl
6/11/2007	11:45	4256.49	43.1%	7.49	1.84	59.8	51.0	43.8	43.3	36.5	36.0	30.0	785	800	790	2.8	41.2	57.53	57.75	43.7	24.00	18.22	nd	0.898	0.90	16.30	4.90	jm
6/12/2007	9:30	4278.07	42.5%	7.47	1.87	60.0	51.0	22.4	21.9	20.5	15.5	9.7	780	795	785	2.5	42.5	57.50	59.10	43.6	24.50	18.55	nd	0.898	0.90	16.60	4.91	bl
6/13/2007	11:45	4299.24	42.7%	7.49	1.84	61.0	50.5	29.0	28.0	23.8	23.0	15.0	780	800	790	2.4	43.0	57.47	58.76	43.7	24.50	18.24	nd	0.900	0.90	16.30	4.95	bv
6/14/2007	9:00	4316.67	42.8%	7.47	1.82	62.0	50.8	39.0	38.0	32.5	32.0	25.5	770	795	790	2.4	43.5	57.66	58.32	43.6	23.80	18.06	nd	0.899	0.90	16.30	4.95	bv
										12 Point flux and Recovery Period																		
6/19/2007	10:12	4341.84	42.5%	6.00	1.71	62.0	53.9	42.3	42.0	40.9	39.8	34.7	735	745	742	2.2	35.5	45.70	47.27	35.0	19.75	13.57	nd	0.842	0.50	12.10	4.65	bl
6/20/2007	10:10	4364.19	46.4%	6.00	1.78	61.5	54.0	44.2	43.9	43.0	41.9	38.4	780	790	785	1.3	32.8	39.68	40.39	35.0	19.80	14.15	nd	0.840	0.35	12.60	4.55	bl px out tds high. re-run point on 6-21
06/21/07	9:45	4386.12	47.0%	5.98	1.77	60.5	54.4	47.8	47.3	46.2	45.0	40.9	775	782	778	1.2	35.5	39.43	44.53	34.9	19.75	14.05	nd	0.845	0.29	12.60	4.59	bl Unbalanced PX to compensate low flo
06/22/07	10:20	4410.71	50.1%	5.98	1.85	62.0	54.5	39.5	39.0	38.1	36.9	33.3	808	819	815	0.9	36.0	34.71	40.95	34.9	20.44	14.68	nd	0.862	0.29	13.50	4.55	bl Unbalanced PX to compensate low flo
06/26/07	10:20	4432.57	41.8%	7.47	1.82	63.0	50.4	32.9	32.1	30.2	27.4	19.0	759	779	770	1.9	44.5	59.28	60.74	43.6	23.85	18.01	nd	0.900	0.95	15.19	4.95	bl
06/27/07	9:50	4454.19	45.8%	7.47	1.87	64.0	52.0	36.9	36.1	34.5	33.0	27.4	804	819	811	1.9	44.5	50.18	51.65	43.6	23.25	18.51	nd	0.902	0.61	16.90	4.83	bl
06/28/07	9:10	4475.80	49.4%	7.42	1.92	64.5	52.8	39.1	38.5	37.0	33.5	29.1	835	847	840	1.9	44.0	44.31	47.23	43.3	24.73	18.84	nd	0.902	0.48	17.35	4.75	bl Unbalanced PX to compensate low flo
06/29/07	9:55	4497.25	43.3%	8.91	1.95	65.0	47.5	29.5	28.3	25.8	23.8	14.1	805	832	819	3.1	51.5	68.02	68.10	52.0	29.92	23.04	nd	0.921	1.37	20.50	5.17	bl
07/03/07	nd	4520.51	45.9%	8.97	1.93	65.0	48.8	34.6	32.7	30.2	28.1	20.0	830	855	840	3.3	51.7	60.03	61.70	52.3	29.90	22.92	nd	0.918	0.97	20.90	5.11	bl
07/05/07	nd	4527.09	49.7%	8.97	1.98	65.5	50.0	43.3	42.5	40.2	38.6	33.0	880	890	885	3.3	51.7	52.55	52.92	52.3	30.40	23.47	nd	0.920	1.00	21.60	5.00	bv
07/06/07	nd	4532.36	43.4%	9.91	1.98	64.0	44.0	32.0	30.5	27.5	24.5	13.0	820	850	840	4.5	58.0	77.44	75.38	57.8	33.60	26.05	nd	0.922	1.80	24.10	5.40	bv
07/09/07	nd	4536.59	46.0%	9.98	2.01	62.5	46.5	37.0	35.8	32.8	29.7	21.0	857	883	870	4.0	56.5	67.31	68.44	58.2	34.60	26.53	nd	0.930	1.45	25.10	5.37	bl
07/10/07	nd	4543.50	50.3%	9.93	2.06	64.0	47.0	35.0	34.0	28.0	29.5	22.8	910	930	920	4.3	58.0	57.62	57.25	57.9	35.05	27.15	nd	0.922	0.90	26.10	5.20	bv
										Most Affordable Point (MAP)																		
07/24/07	17:15	4564.69	50.4%	9.00	2.12	66.0	47.5	34.0	33.0	27.0	29.5	24.0	930	950	940	3.6	52.0	51.56	51.72	52.5	32.75	25.28	nd	0.922	0.7	23.5	4.7	bv
07/26/07	16:45	4591.27	50.2%	9.00	2.10	67.0	49.0	34.0	32.5	27.0	29.0	23.5	925	940	930	3.5	52.0	50.51	52.10	52.5	32.61	25.04	nd	0.925	0.7	23.3	4.9	bv
07/27/07	15:10	4607.91	50.6%	9.00	2.13	66.0	55.5	33.0	32.5	30.0	28.0	22.5	930	950	940	3.25	52.0	51.93	51.25	52.5	33.03	25.35	nd	0.923	0.8	23.5	5.8	bv
08/07/07	9:23	4637.68	50.3%	8.95	2.12	66.0	58.2	33.9	32.9	30.9	29.5	23.9	924	940	935	3.3	51.0	50.93	51.52	52.2	32.74	25.09	nd	0.921	0.65	23.2	6.05	bl
08/08/07	9:15	4658.32	50.3%	8.98	2.15	63.0	53.2	33.7	33.0	30.6	29.1	23.8	941	957	948	3.25	51.5	50.67	51.71	52.4	33.25	25.55	nd	0.921	0.66	23.7	5.39	bl
08/09/07	9:10	4680.36	50.3%	8.97	2.15	63.0	57.8	33.8	33.0	27.3	28.5	23.1	945	959	945	3.25	51.0	50.78	51.65	52.3	33.32	25.59	nd	0.92	0.65	23.75	6	bl
08/10/07	9:13	4701.86	50.4%	8.98	2.14	64.0	52.4	33.2	32.9	30.5	27.0	22.5	943	959	946	3.25	51.5	51.08	51.60	52.4	32.97	25.51	nd	0.922	0.65	23.63	5.3	bl
08/14/07	1:48	4721.01	50.2%	8.97	2.10	66.0	49.8	33.2	32.4	30.1	29.0	23.3	925	941	933	2.8	51.0	50.55	51.90	52.3	32.13	24.98	nd	0.926	0.66	23.19	5.07	bl
08/15/07	9:48	4739.81	50.1%	8.97	2.13	64.0	51.5	33.8	33.0	30.6	29.2	23.8	940	955	945	3.25	51.5	51.59	52.15	52.3	33.15	25.31	nd	0.925	0.65	23.49	5.15	bl
08/16/07	8:31	4761.17	50.2%	8.97	2.16	62.5	51.5	34.0	33.2	27.2	28.8	23.4	950	965	960	3.5	51.5	50.85	51.93	52.3	33.27	25.66	nd	0.924	0.68	23.84	5.15	bl
08/17/07	9:25	4784.47	50.2%	8.95	2.17	62.5	51.1	33.4	32.9	27.0	26.9	22.3	955	968	961	3.25	52.0	50.83	51.85	52.2	33.31	25.74	nd	0.923	0.67	23.9	5.12	bl
			MAP Average		2.12																							
			MAP Maximum		2.17																							
			MAP Minimum		1.98																							
Koch membranes - TFC 2822HF-400										**Membrane Ripening Period**																		
08/22/07	9:10	4805.09	42.3%	7.47	1.78	64.0	48.0	33.8	32.9	27.1	29.2	21.9	736	759	745	2.2	44.0	57.86	59.58	43.6	23.27	17.58	nd	0.899	0.95	15.6	4.68	bl
08/23/07	9:10	4827.55	42.5%	7.51	1.77	64.0	49.1	33.9	33.1	30.8	29.2	21.9	739	762	749	2.2	44.0	57.76	59.14	43.8	23.31	17.62	nd	0.900	0.95	15.6	4.81	bl
08/24/07	9:50	4850.52	42.4%	7.51	1.76	64.0	48.1	33.9	33.2	30.7	29.3	22.1	738	759	747	2.2	44.0	57.74	59.54	43.8	23.12	17.54	nd	0.897	0.95	15.6	4.65	bl
08/27/07	1:15	4856.07	42.6%	7.53	1.75	62.0	40.1	33.7	32.7	27.0	29.1	21.9	737	758	744	1.9	44.5	57.62	59.23	43.9	23.09	17.44	nd	0.903	0.94	15.6	3.77	bl
08/28/07	8:35	4875.27	42.6%	7.53	1.76	61.0	48.5	34.0	33.2	30.7	29.7	22.0	740	760	750	2.6	44.0	56.62	59.14	43.9	23.45	17.53	nd	0.900	0.95	15.6	4.70	bV
08/29/07	14:30	4903.54	42.7%	7.53	1.76	60.0	47.5	33.5	33.0	30.5	29.0	22.0	750	770	755	2.1	44.0	56.12	59.03	43.9	23.29	17.57	nd	0.901	0.95	15.7	4.80	bv
08/30/07	8:25	4919.93	42.5%	7.51	1.78	59.9	43.5	34.0	33.2	30.8	29.7	22.0	750	770	760	2.5	44.0	57.35	59.16	43.8	23.29	17.68	nd	0.902	0.95	15.8	4.10	bv
08/31/07	10:10	4942.55	42.6%	7.51	1.78	59.9	44.8	34.0	33.2	30.8	29.7	22.2	755	775	765	2.5	44.0	57.87	58.95	43.8	23.47	17.72	nd	0.902	0.95	15.8	4.25	bv
09/05/07	2:15	4977.24	42.3%	7.51	1.76	62.0	47.9	33.6	32.7	27.0	29.1	21.9	739	758	745	1.9	44.1	58.21	59.82	43.8	23.18	17.46	nd	0.902	1.04	15.5	4.05	bl
09/06/07	9:05	4994.49	42.5%	7.53	1.76	60.0	43.0	34.1	33.2	27.2	29.3	22.1	737	760	746	2.3	44.5	58.34	59.35	43.9	23.30	17.57	nd	0.905	1.05	15.6	4.05	bl
09/07/07	9:55	5019.27	42.3%	7.53	1.73	62.0	57.0	34.5	33.5	30.8	29.8	22.2	738	750	740	2.5	44.5	58.98	59.86	43.9	23.36	17.29	nd	0.898	1.00	15.3	5.90	bv
										12 Point flux and Recovery Period																		
09/11/07	13:00	5044.4	42.9%	5.98	1.67	62.0	42.0	32.0	31.5	30.0	29.8	25.0	710	725	720	1.1	35.0	44.54	46.50	34.9	18.47	13.23	nd	0.852	0.55	11.8	3.30	bv
09/12/07	16:15	5071.67	45.7%	5.98	1.72	61.8	48.0	32.0	31.5	30.0	29.8	26.0	750	760	755	1.1	35.0	38.86	41.39	34.9	18.59	13.63	nd	0.853	0.40	12.1	3.85	bv px out tds high.
10/03/07	9:35	5269.17	46.9%	5.98	1.67	62.0	49.5	32.8	32.2	30.5	30.0	25.7	730	740	735	1.5	35.0	39.58	46.02	34.9	18.69	13.20	nd	0.845	0.45	12.0	4.15	bv
09/13/07	15:45	5093.8	50.3%	5.98	1.82	60.0	38.0	32.0	31.5	30.0	29.8	27.0	800	810	805	1.1	35.0	32.29	34.47	34.9	19.78	14.44	nd	0.859	0.30	12.9	2.80	bv px out tds high.
10/19/07	9:20	5438.31	42.5%	7.47	1.79	58.0	58.9	29.0	28.2	25.3	23.9	16.9	745	767	759	2.7	44.5	57.81	58.92	43.6	23.38	17.76	nd	0.899	1.05	15.7	6.05	bl

TIME			CALCULATED PARAMETERS			TEMP	PRESSURES										FLOWS				MAIN PANEL KW METER				VFD KW METER			
		Operation	RO	Flux	Power		P_{MF-in}	P_{MF-out}	P_{CF-in}	P_{CF-out}	$P_{PX-Feed\ In}$	$P_{PX-conc\ out}$	$P_{PX-boost\ suct}$	P_{F-SYS}	P_{C-SYS}	P_{P-SYS}	$Q_{F-HP\ Pump}$	$Q_{PX\ Pump}$	$Q_{Feed\ PX-In}$	Q_{P-SYS}	A_{sys}	P HP/PX	P booster	Power	PX power	HP Power	Feed Pump	
Date	Time	Time	Recovery %	Gfd	kWh/m3	Influent	(psi)	(psi)	(psi)	(psi)	(psi)	(psi)	(psi)	(psi)	(psi)	(psi)	(gpm)	(gpm)	(gpm)	(gpm)	amp	(kw)	(kw)	Factor	(kw)	(kw)	(kw)	Notes
MM/DD/YY	hh:mm	hh.hh				Temp F	1	2	3	4	5	6	7	8	9	10	11	12	13	14	15	16	17	18	19	20	21	
10/10/07	14:00	5303.19	42.6%	7.54	1.77	59.0	41.4	34.2	33.3	27.0	29.4	22.0	739	759	725	3.2	44.5	57.62	59.36	44.0	23.51	17.68	nd	0.905	1.07	15.7	4.95	bl
10/11/07	8:35	5321.8	42.6%	7.53	1.77	58.0	49.3	35.0	34.1	27.8	29.8	22.6	742	762	751	3.1	44.5	57.99	59.16	43.9	23.23	17.61	nd	0.903	0.95	15.7	4.88	bl
10/18/07	9:35	5414.55	42.7%	7.53	1.77	58.0	47.1	35.1	34.1	27.8	29.8	22.1	741	764	751	2.8	44.5	57.86	59.03	43.9	23.48	17.67	nd	0.894	1.05	15.7	4.45	bl
10/02/07	8:25	5244.08	42.9%	7.54	1.74	61.0	46.8	34.8	34.0	31.0	29.9	22.6	735	755	750	3.1	44.0	57.13	58.53	44.0	22.82	17.35	nd	0.901	0.95	15.6	4.45	bv
09/14/07	16:35	5107.02	43.2%	7.51	1.77	60.0	46.0	34.0	33.0	30.5	29.0	22.0	750	765	760	2.2	44.0	57.32	57.55	43.8	23.06	17.58	nd	0.902	0.95	15.8	4.50	bv
09/17/07	14:40	5113.22	45.8%	7.51	1.79	60.0	39.0	33.2	32.7	30.4	29.3	23.7	767	784	778	2.2	44.5	49.68	51.84	43.8	23.31	17.79	nd	0.905	0.95	16.2	3.39	bl
10/04/07	16:00	5295.92	47.2%	7.51	1.80	63.0	50.0	33.0	32.5	30.0	29.5	24.0	795	810	800	2.1	44.0	43.06	47.48	43.8	23.57	17.92	nd	0.905	0.55	16.4	4.75	bv
09/18/07	9:00	5131.54	49.9%	7.47	1.88	62.0	45.0	33.1	32.5	27.1	29.7	25.3	820	835	825	2.4	44.5	42.41	43.85	43.6	24.65	18.57	nd	0.907	0.50	17.2	3.82	bl
09/19/07	12:15	5150.03	42.3%	8.93	1.82	63.0	49.6	35.9	34.9	27.8	29.5	19.6	759	785	768	3.6	52.0	69.56	70.98	52.1	28.52	21.58	nd	0.916	1.60	19.1	5.71	bl
09/20/07	9:26	5169.9	45.8%	8.95	1.86	62.0	48.2	35.1	34.2	27.6	29.6	21.8	798	822	805	3.6	52.0	60.16	61.85	52.2	28.64	22.05	nd	0.920	1.10	19.9	5.16	bl
09/21/07	11:13	5194.13	50.1%	8.90	1.93	63.0	48.3	34.1	33.3	26.9	29.4	23.8	845	864	855	3.4	52.0	50.22	51.77	51.9	29.64	22.79	nd	0.922	0.90	21.1	4.88	bl
10/17/07	9:00	5392.24	42.2%	9.98	1.89	58.5	52.3	32.1	30.7	23.1	23.7	11.9	788	831	805	5.1	57.5	77.42	79.64	58.2	33.30	24.95	nd	0.926	2.34	23.4	6.65	bl re-run point to avoid FWF water quali
09/25/07	14:08	5204.98	42.7%	9.98	1.89	65.0	49.5	36.7	35.3	27.1	29.1	16.9	768	805	785	4.3	57.0	77.36	77.97	58.2	32.80	25.01	nd	0.933	2.25	22.8	6.35	bl
10/16/07	14:30	5375.55	45.8%	9.96	1.97	60.0	54.1	30.2	29.1	22.2	23.4	14.9	829	863	843	4.3	58.0	66.68	68.78	58.1	33.81	25.95	nd	0.934	1.66	24.5	6.53	bl re-run point to avoid FWF water quali
09/26/07	17:00	5212.75	46.3%	9.98	1.89	65.0	52.0	35.5	34.2	30.8	29.0	20.0	810	840	825	4.2	57.0	66.96	67.62	58.2	32.50	25.03	nd	0.925	1.60	23.3	6.3	bv
10/11/07	14:00	5325.75	49.6%	10.01	2.00	59.0	43.2	35.8	34.5	27.2	29.4	22.2	874	899	882	4.7	58.0	56.62	59.37	58.4	34.64	26.59	nd	0.930	1.07	25.7	4.68	bl re-run point to avoid FWF water quali
10/12/07	9:08	5344.85	49.7%	9.98	2.03	59.0	55.9	35.8	34.7	27.6	29.5	22.4	877	900	885	4.8	58.0	56.75	58.99	58.2	34.78	26.78	nd	0.927	1.08	25.8	6.37	bl re-run point to avoid FWF water quali
09/27/07	15:50	5221.39	50.7%	9.99	1.96	65.0	54.8	34.8	33.5	30.5	29.2	22.3	860	885	875	4.2	57.0	55.57	56.60	58.3	33.76	25.91	nd	0.928	0.95	25.1	6.15	bv
										Most Affordable Point (MAP) Period																		
10/30/07	14:49	5470.29	44.7%	9.00	1.88	60.0	49.6	35.8	34.8	27.9	29.8	20.9	795	822	804	3.7	52.5	59.86	64.84	52.5	28.78	22.37	nd	0.922	1.25	20.1	5.4	bl
10/31/07	10:19	5487.88	44.9%	9.02	1.89	60.0	48.1	36.0	34.9	27.9	29.7	21.2	798	823	806	3.8	52.5	59.91	64.62	52.6	29.23	22.52	nd	0.922	1.27	20.2	5.21	bl
11/01/07	10:16	5510.05	45.5%	8.98	1.87	60.5	48.3	35.8	34.8	27.2	29.7	21.4	795	822	804	3.8	52.5	59.61	62.71	52.4	28.81	22.21	nd	0.921	1.23	20.0	5.13	bl
11/02/07	10:13	5532.28	45.6%	8.98	1.86	61.0	47.9	35.9	34.8	27.4	29.6	21.6	795	820	803	3.8	52.5	60.54	62.55	52.4	28.92	22.19	nd	0.919	1.25	19.9	5.1	bl
11/06/07	14:05	5556.71	46.1%	8.98	1.87	60.0	46.9	35.7	34.7	27.2	29.8	21.9	795	823	806	3.8	52.5	59.91	61.15	52.4	28.91	22.29	nd	0.922	1.21	20.2	4.95	bl
11/07/07	10:02	5574.64	46.2%	8.97	1.88	60.0	46.4	35.8	34.8	27.3	29.7	21.9	800	825	808	3.7	52.5	59.93	60.96	52.3	29.58	22.32	nd	0.922	1.25	20.1	4.7	bl
11/08/07	9:23	5596.15	45.4%	8.97	1.88	59.0	46.6	35.9	34.9	27.7	29.9	21.7	800	825	813	3.8	52.5	59.74	62.96	52.3	29.61	22.38	nd	0.923	1.24	20.2	4.78	bl
11/09/07	13:16	5621.67	45.1%	8.97	1.89	59.5	45.8	35.4	34.6	27.1	29.3	21.1	800	825	809	3.3	52.0	59.92	63.62	52.3	29.15	22.48	nd	0.919	1.30	20.1	4.87	bl
11/12/07	14:30	5625.97	45.3%	8.97	1.87	60.0	42.1	35.6	34.7	27.1	29.3	21.1	792	819	800	3.3	52.5	59.93	63.14	52.3	28.93	22.21	nd	0.922	1.33	20.0	4.41	bl
11/13/07	15:37	5651.08	45.3%	8.97	1.89	60.0	50.8	35.4	34.3	26.9	29.1	20.9	796	822	804	3.2	52.5	60.32	63.15	52.3	29.18	22.42	nd	0.917	1.36	20.0	5.59	bl
11/14/07	10:18	5668.07	45.2%	8.98	1.89	60.0	46.3	35.4	34.4	26.8	29.2	20.9	799	825	807	3.2	52.5	60.44	63.42	52.4	30.87	22.45	nd	0.924	1.38	20.1	5.05	bl
11/15/07	8:20	5688.28	45.1%	8.98	1.89	60.0	47.1	36.1	35.1	27.4	29.5	21.1	800	825	807	3.6	52.5	60.18	63.85	52.4	29.79	22.49	nd	0.924	1.37	20.2	5.1	bl
11/16/07	9:52	5712.08	45.3%	8.98	1.90	59.5	49.2	36.2	35.2	27.7	29.8	21.4	802	827	816	3.8	52.5	60.24	63.15	52.4	29.87	22.57	nd	0.923	1.33	20.2	5.42	bl
										Base Line Test																		
11/19/07	14:51	5717.84	42.3%	7.47	1.76	58.5	40.3	35.0	34.1	30.9	29.7	22.2	728	756	742	3.3	44.5	57.62	59.48	43.6	22.51	17.42	nd	0.903	1.15	15.4	3.77	bl
11/20/07	14:28	5741.45	42.8%	7.49	1.74	60.0	44.0	34.5	33.8	26.9	29.5	22.1	739	759	743	2.3	44.0	57.59	58.38	43.7	23.41	17.31	nd	0.904	1.05	15.4	4.39	bl
11/21/07	9:57	5760.93	42.6%	7.49	1.74	59.5	50.8	35.0	34.2	27.2	29.7	22.3	740	758	743	2.6	44.0	57.58	58.86	43.7	23.52	17.31	nd	0.903	1.05	15.4	5.14	bl
			MAP Average		1.88																							
			MAP Maximum		1.90																							
			MAP Minimum		1.86																							
Hydranautics membranes - SWC5										**Membrane Ripening Period**																		
11/28/07	14:45	5762.13	43.0%	7.51	1.79	60.0	40.0	34.4	33.5	26.8	29.0	22.2	760	775	770	2.4	44.2	57.54	58.12	43.8	24.02	17.80	nd	0.907	0.90	16.1	3.8	jm, hyd memb 1st point, ~1hr operation
11/29/07	15:10	5772.73	42.7%	7.47	1.79	59.0	42.0	34.8	33.8	30.5	29.8	22.2	770	785	780	2.5	44.0	57.84	58.43	43.6	23.65	17.72	nd	0.909	0.95	16.0	3.95	bv
11/30/07	14:20	5795.71	42.8%	7.47	1.79	58.0	48.0	35.0	34.2	30.8	29.5	23.5	770	785	778	2.5	44.0	57.04	58.31	43.6	23.64	17.72	nd	0.905	0.95	15.9	4.7	bv
12/03/07	16:10	5803.57	42.4%	7.51	1.77	57.0	42.0	35.5	34.8	31.2	30.0	22.5	765	780	775	3.0	44.0	56.82	59.47	43.8	23.39	17.65	nd	0.902	0.90	15.8	3.95	bl
12/04/07	9:24	5820.82	42.5%	7.49	1.79	56.5	46.4	35.6	34.8	27.8	29.9	22.7	762	780	773	3.1	44.0	57.44	59.12	43.7	23.73	17.73	nd	0.904	0.91	15.9	4.5	bl
12/05/07	8:24	5841.99	42.5%	7.49	1.79	57.5	46.3	35.2	34.7	27.6	29.9	22.4	761	782	775	2.9	44.0	57.74	59.22	43.7	23.41	17.78	nd	0.903	0.91	15.9	4.43	bl
12/06/07	9:15	5865.08	42.4%	7.49	1.78	58.0	46.1	35.6	34.8	27.4	29.9	22.4	759	779	770	2.9	44.0	57.62	59.34	43.7	23.42	17.68	nd	0.904	0.95	15.9	4.45	bl
12/07/07	8:30	5886.31	42.2%	7.51	1.78	58.0	47.8	35.7	35.0	27.8	29.9	22.7	760	780	772	3.1	44.0	57.26	59.96	43.8	23.42	17.66	nd	0.901	0.91	15.9	4.63	bl
12/10/07	15:44	5893.76	42.4%	7.49	1.77	56.5	41.8	35.2	34.4	27.1	29.9	22.2	760	777	765	2.6	44.0	57.13	59.25	43.7	23.31	17.59	nd	0.902	0.92	15.8	3.95	bl
12/11/07	14:45	5916.77	42.4%	7.49	1.78	57.0	47.1	35.3	34.6	27.2	29.9	22.3	760	780	770	2.6	44.0	57.14	59.45	43.7	23.42	17.63	nd	0.903	0.93	15.9	4.64	bl
12/12/07	9:59	5934.33	42.5%	7.51	1.78	56.5	44.9	35.9	35.1	27.9	30.1	22.9	762	782	772	3.2	44.0	58.21	59.36	43.8	23.61	17.69	nd	0.903	0.91	15.9	4.23	bl
12/13/07	9:20	5957.51	42.4%	7.51	1.79	55.5	48.9	36.2	35.6	28.2	30.1	23.0	762	782	775	4.3	44.0	58.73	59.46	43.8	23.55	17.76	nd	0.904	0.92	15.9	4.77	bl
12/14/07	8:47	5979.06	42.4%	7.51	1.79	56.0	46.9	36.4	35.6	28.2	30.2	23.1	765	785	777	3.4	44.0	58.26	59.53	43.8	23.47	17.79	nd	0.899	0.91	15.9	4.3	bl
										12 Point flux and Recovery Period																		
01/04/08	10:15	6044.01	43.0%	5.97	1.70	56.5	47.1	32.9	32.3	27.3	30.1	25.0	722	738	733	1.8	35.5	46.14	49.32	34.8	18.91	13.42	nd	0.844	0.55	12.3	3.95	bl
01/08/08	13:28	6072.97	47.1%	6.00	1.78	56.5	39.1	32.1	31.8	27.1	30.0	26.6	765	779	773	1.6	36.0	39.29	45.53	35	19.11	14.14	nd	0.854	0.41	13.1	2.97	bl

TIME			CALCULATED PARAMETERS			TEMP	PRESSURES										FLOWS				MAIN PANEL KW METER				VFD KW METER			
		Operation	RO	Flux	Power		P_{MF-in}	P_{MF-out}	P_{CF-in}	P_{CF-out}	$P_{PX-Feed\ In}$	$P_{PX-conc\ out}$	$P_{PX-boost\ suct}$	P_{F-SYS}	P_{C-SYS}	P_{P-SYS}	$Q_{F-HP\ Pump}$	$Q_{PX\ Pump}$	$Q_{Feed\ PX-In}$	Q_{P-SYS}	A_{sys}	P HP/PX	P booster	Power	PX power	HP Power	Feed Pump	
Date	Time	Time	Recovery %	Gfd	kWh/m3	Influent	(psi)	(psi)	(psi)	(psi)	(psi)	(psi)	(psi)	(psi)	(psi)	(psi)	(gpm)	(gpm)	(gpm)	(gpm)	amp	(kw)	(kw)	Factor	(kw)	(kw)	(kw)	Notes
MM/DD/YY	hh:mm	hh.hh				Temp F	1	2	3	4	5	6	7	8	9	10	11	12	13	14	15	16	17	18	19	20	21	
01/09/08	14:40	6098.13	51.4%	5.97	1.84	56.0	43.5	32.5	32.0	30.8	29.0	26.0	800	810	805	1.7	35.0	32.92	44.74	34.8	19.89	14.53	nd	0.861	0.30	13.1	3.4	bv
01/10/08	9:15	6116.76	42.4%	7.51	1.80	56.0	53.6	34.9	33.9	28.0	30.1	22.6	762	779	769	3.3	44.0	57.44	59.56	43.8	23.62	17.88	nd	0.903	0.89	16.2	5.33	bl
01/11/08	10:05	6139.91	46.0%	7.49	1.86	56.0	41.2	33.7	33.0	32.4	29.9	24.1	801	818	805	3.1	44.5	50.01	51.33	43.7	24.17	18.41	nd	0.908	0.74	19.8	3.61	bl
01/15/08	9:51	6164.8	47.1%	7.49	1.92	56.0	45.8	33.8	32.9	27.7	30.1	25.1	842	858	845	3.1	45.0	41.98	49.13	43.7	25.02	19.02	nd	0.911	0.46	17.8	4.04	bl
01/16/08	10:19	6187.17	42.6%	9.00	1.91	56.0	47.1	36.1	34.9	28.1	29.9	19.9	803	826	818	4.3	52.5	69.36	70.77	52.5	29.57	22.72	nd	0.919	1.49	20.3	5.23	bl
01/17/08	8:44	6207.86	45.8%	9.00	1.96	56.0	46.1	36.6	34.7	30.2	30.1	22.6	850	874	860	4.6	53.5	60.12	62.15	52.5	30.29	23.39	nd	0.923	1.03	21.4	4.59	bl
01/18/08	9:28	6229.25	49.1%	8.98	2.03	56.0	44.1	34.6	33.8	28.0	30.1	23.7	899	918	905	5.8	53.5	50.74	54.42	52.4	31.37	24.12	nd	0.926	0.87	22.5	4.22	bl
01/23/08	9:11	6252.9	42.4%	9.99	1.97	55.0	52.2	37.6	36.2	28.8	30.0	18.1	815	847	829	5.6	58.0	77.29	79.24	58.3	33.58	26.05	nd	0.922	2.19	23.7	6.65	bl
01/30/08	11:15	6291.76	45.4%	9.98	1.99	56.5	48.2	36.7	35.3	28.2	29.9	20.1	847	878	861	5.3	58.0	67.21	70.02	58.2	34.18	26.31	nd	0.917	1.42	24.4	5.67	bl
01/31/08	9:10	6311.85	49.0%	9.99	2.06	56.0	46.1	36.1	35.1	28.3	30.2	22.9	902	922	916	5.8	58.0	56.47	60.72	58.3	35.53	27.21	nd	0.922	0.94	26.3	4.85	bl
										Base Line Test																		
02/01/08	9:07	6333.97	42.7%	7.51	1.80	54.5	42.7	34.8	34.0	28.6	30.2	22.1	764	783	778	3.4	44.5	57.93	58.86	43.8	23.94	17.87	nd	0.896	0.91	16.1	3.85	bl
										Most Affordable Point (MAP) Period																		
02/05/08	2:18	6365.02	45.6%	9.05	1.97	55.5	50.1	35.2	34.1	27.9	29.9	21.8	844	868	859	4.2	53.5	60.34	62.96	52.8	30.68	23.64	nd	0.916	1.05	21.5	5.47	bl
02/06/08	4:25	6389.4	45.2%	8.98	1.93	56.0	43.1	35.1	34.1	27.8	29.9	21.6	838	859	843	3.9	53.0	59.92	63.46	52.4	29.86	22.95	nd	0.912	1.02	20.9	4.49	bl
02/07/08	10:22	6407.35	45.2%	8.98	1.95	56.0	46.4	35.3	34.5	28.1	29.9	21.8	840	861	850	5.6	53.0	59.88	63.61	52.4	30.25	23.17	nd	0.912	1.01	21.0	4.91	bl
02/08/08	11:04	6430.12	45.0%	8.97	1.94	56.0	43.1	35.1	34.2	27.7	29.8	21.4	840	860	845	3.8	52.5	60.19	63.84	52.3	30.18	23.08	nd	0.912	0.98	20.9	4.52	bl
02/12/08	9:00	6455.09	45.9%	9.02	1.94	57.0	47.2	35.3	34.2	27.9	29.9	22.0	839	859	845	4.2	53.5	60.31	61.98	52.6	30.44	23.13	nd	0.912	1.01	21.3	5.14	bl
02/13/08	10:45	6478.85	45.9%	9.02	1.95	57.0	46.0	35.3	34.2	27.9	29.9	22.1	840	861	850	4.2	53.5	60.67	61.89	52.6	30.52	23.29	nd	0.913	1.03	21.2	4.75	bl
02/14/08	11:20	6501.59	45.7%	9.02	1.95	56.0	44.1	35.3	34.2	27.8	29.9	22.1	843	865	858	4.2	53.5	59.74	62.46	52.6	30.67	23.34	nd	0.914	1.01	21.3	4.66	bl
02/15/08	9:08	6523.37	45.6%	9.03	1.95	55.0	49.1	35.8	34.7	28.2	30.1	22.1	843	865	856	4.5	53.5	59.76	62.78	52.7	30.43	23.38	nd	0.913	1.02	21.4	5.28	bl
02/19/08	13:05	6547.73	45.6%	9.03	1.94	56.0	45.0	35.5	34.5	31.7	30.0	22.3	845	865	855	4.5	53.7	59.21	62.97	52.7	30.29	23.20	nd	0.914	1.00	21.1	4.7	bv
02/20/08	10:07	6566.39	46.0%	9.02	1.95	56.0	48.4	35.3	34.2	27.8	29.9	22.0	841	861	850	4.5	53.5	59.88	61.85	52.6	30.41	23.31	nd	0.913	1.03	21.2	5.24	bl
	MAP Average		45.6%	9.01	1.95	56.1																						
	MAP Maximum		46.0%	9.05	1.97	57.0																						
	MAP Minimum		45.0%	8.97	1.93	55.0																						
										Base Line Test																		
02/21/08	9:15	6587.62	42.2%	7.51	1.80	56.0	42.1	34.6	33.8	27.9	30.0	22.5	763	782	777	3.1	45.0	57.53	59.91	43.8	23.76	17.87	nd	0.893	0.89	16.1	3.99	bl
02/22/08	9:58	6612.33	42.2%	7.51	1.81	56.0	46.9	34.3	33.6	27.4	29.9	22.4	760	780	773	2.8	44.5	57.92	60.11	43.8	23.71	17.96	nd	0.894	0.91	16.1	4.54	bl
DOW-FILMTEC Hybrid 1 SW30XHR-400i - 1 SW30XLE-400i - 5 XUS-259124 x 3 vessels										**Membrane Ripening Period**																		
02/27/08	11:25	6631.98	42.2%	7.51	1.75	58.0	41.2	33.8	33.0	26.9	29.3	22.0	744	762	755	2.2	44.5	58.02	60.04	43.8	23.33	17.39	nd	0.893	0.89	15.4	3.94	bl
02/28/08	9:25	6653.99	42.5%	7.53	1.76	57.0	45.2	34.6	33.7	27.4	29.9	22.1	744	765	759	2.8	44.5	57.93	59.48	43.9	23.65	17.51	nd	0.889	0.85	15.7	4.38	bl
02/29/08	9:46	6676.55	42.4%	7.51	1.75	58.0	42.4	44.5	33.6	27.3	29.9	22.1	745	763	755	2.7	44.5	57.81	59.49	43.8	23.26	17.41	nd	0.888	0.88	15.6	4.06	bl
03/04/08	9:26	6699.51	42.0%	7.53	1.75	56.0	47.9	34.6	33.7	27.3	29.9	22.2	742	761	753	2.7	44.5	57.81	60.61	43.9	23.23	17.43	nd	0.886	0.91	15.5	4.74	bl
03/05/08	9:39	6721.62	42.2%	7.53	1.75	56.0	42.2	34.4	33.6	27.4	29.9	21.9	744	763	758	2.7	45.0	57.73	60.01	43.9	23.43	17.47	nd	0.886	0.90	15.7	4.04	bl
03/06/08	9:53	6745.85	42.5%	7.51	1.76	56.5	46.9	34.3	33.6	27.3	29.9	22.4	745	763	758	2.7	44.5	57.96	59.18	43.8	23.27	17.52	nd	0.887	0.94	15.5	4.58	bl
03/07/08	10:34	6768.52	42.3%	7.49	1.75	58.0	44.1	34.1	33.2	29.1	29.9	22.2	747	763	758	2.3	44.5	57.43	59.64	43.7	23.45	17.41	nd	0.889	0.89	15.7	4	bl
03/11/08	10:21	6794.4	42.4%	7.51	1.76	57.0	42.3	34.4	33.5	27.3	29.9	22.0	745	768	760	2.3	44.5	57.61	59.42	43.8	23.64	17.51	nd	0.887	0.91	15.6	4.11	bl
03/12/08	12:42	6820.72	42.4%	7.53	1.76	57.0	47.5	34.5	33.8	28.0	30.0	22.2	750	770	760	2.8	44.0	58.57	59.75	43.9	23.72	17.55	nd	0.884	0.90	15.8	4.65	bv
03/13/08	12:15	6842.29	42.6%	7.56	1.75	57.0	43.0	34.5	33.0	31.0	29.8	22.0	750	770	765	2.6	44.0	58.70	59.48	44.1	23.59	17.56	nd	0.887	0.90	15.8	4.25	bv
03/18/08	10:48	6884.52	42.4%	7.53	1.79	54.5	52.2	34.8	33.9	27.6	30.0	22.6	758	778	765	3	45.0	58.02	59.74	43.9	23.64	17.82	nd	0.889	1.04	15.8	5.27	bl
										12 Point flux and Recovery Period																		
03/19/08	10:54	6906.91	43.0%	6.00	1.66	54.5	40.4	33.5	32.9	27.6	30.1	24.5	704	720	715	2.1	36.0	46.32	51.36	35	18.72	13.23	nd	0.832	0.61	11.4	3.31	bl Unbalanced PX to compensate low flo
03/20/08	10:01	6930.05	47.1%	6.00	1.69	54.5	43.6	33.1	32.8	27.6	29.9	25.1	735	743	739	2.1	36.5	39.36	48.66	35	19.27	13.45	nd	0.836	0.45	12.2	3.6	bl Unbalanced PX to compensate low flo
03/21/08	9:31	6951.88	50.8%	5.95	1.79	56.0	38.1	33.1	32.5	27.2	30.1	25.8	780	788	784	2.1	36.0	33.57	46.42	34.7	19.71	14.11	nd	0.834	0.28	12.9	2.95	bl Unbalanced PX to compensate low flo
03/25/08	10:05	6977.77	42.3%	7.51	1.77	55.0	45.4	34.8	33.8	27.9	29.9	22.1	753	771	761	3.2	45.0	57.79	59.85	43.8	23.32	17.59	nd	0.887	0.94	15.7	4.35	bl
03/26/08	9:59	6999.91	46.5%	7.49	1.79	56.0	42.2	34.1	33.4	27.5	29.9	23.4	781	798	787	2.9	45.0	50.22	53.12	43.7	23.77	17.81	nd	0.891	0.75	16.3	3.77	bl unbalanced PX was operator error
04/08/08	9:39	7138.64	50.9%	7.53	1.89	55.0	46.9	34.4	33.9	29.2	29.9	24.2	830	843	839	2.9	45.6	42.42	51.54	43.9	25.03	18.82	nd	0.893	0.48	17.5	4.38	bl Unbalanced PX to compensate low flo
03/27/08	10:06	7024.03	50.9%	7.49	1.86	56.0	47.9	33.9	33.1	31.1	29.9	24.7	722	738	728	2.7	45.0	42.18	50.54	43.7	24.49	18.46	nd	0.893	0.47	18.1	4.39	bl, feed pressure went down but recover
04/01/08	13:30	7060.47	42.1%	9.00	1.89	55.0	52.5	37.0	35.5	28.0	29.8	19.5	790	815	800	4.4	53.0	71.14	72.34	52.5	29.59	22.49	nd	0.909	1.60	19.8	6.15	bv
04/04/08	12:01	7115.52	46.7%	9.02	1.91	56.0	52.6	36.3	35.2	27.6	29.9	21.1	825	845	838	4.1	53.5	59.92	63.94	52.6	29.84	22.77	nd	0.908	1.02	20.7	5.86	bl unbalanced PX was operator error
04/09/08	10:09	7160.95	50.8%	8.98	2.00	54.0	50.0	36.0	35.1	27.6	29.9	23.1	885	900	895	4.2	54.0	50.76	56.85	52.4	31.24	23.78	nd	0.911	0.84	22.0	5.28	bl unbalanced PX was operator error
04/10/08	9:32	7182.71	55.9%	8.98	2.10	54.0	46.6	35.8	34.9	27.7	29.9	24.1	940	951	944	4.2	54.0	41.34	53.03	52.4	32.65	24.96	nd	0.915	0.49	23.4	4.67	bl Unbalanced PX to compensate low flo
04/11/08	9:45	7205.34	42.7%	10.03	1.99	56.0	52.1	36.8	35.2	26.9	27.3	15.2	827	860	842	5.4	58.0	77.27	78.62	58.5	34.63	26.38	nd	0.918	1.98	24.2	6.65	bl
04/16/08	9:23	7235.23	46.6%	9.98	2.01	56.0	53.5	34.4	33.1	24.2	25.4	15.8	858	883	873	5.5	58.5	66.76	71.23	58.2	34.75	26.58	nd	0.911	1.48	24.9	6.54	bl unbalanced PX was operator error

TIME			CALCULATED PARAMETERS			TEMP	PRESSURES										FLOWS				MAIN PANEL KW METER				VFD KW METER			
		Operation	RO	Flux	Power		P_{MF-in}	P_{MF-out}	P_{CF-in}	P_{CF-out}	$P_{PX-Feed\ In}$	$P_{PX-conc\ out}$	$P_{PX-boost\ suct}$	P_{F-SYS}	P_{C-SYS}	P_{P-SYS}	$Q_{F-HP\ Pump}$	$Q_{PX\ Pump}$	$Q_{Feed\ PX-In}$	Q_{P-SYS}	A_{sys}	P HP/PX	P booster	Power	PX power	HP Power	Feed Pump	
Date	Time	Time	Recovery %	Gfd	kWh/m3	Influent	(psi)	(psi)	(psi)	(psi)	(psi)	(psi)	(psi)	(psi)	(psi)	(psi)	(gpm)	(gpm)	(gpm)	(gpm)	amp	(kw)	(kw)	Factor	(kw)	(kw)	(kw)	Notes
MM/DD/YY	hh:mm	hh.hh				Temp F	1	2	3	4	5	6	7	8	9	10	11	12	13	14	15	16	17	18	19	20	21	
04/17/08	8:05	7255.32	50.7%	9.96	2.06	56.0	52.6	38.4	37.3	27.5	30.0	22.1	905	925	919	5.6	58.5	56.51	61.17	58.1	35.15	27.24	nd	0.921	0.97	26.0	5.99	bl unbalanced PX was operator error
										Base Line Test																		
04/18/08	9:14	7278.18	42.2%	7.47	1.79	56.0	49.1	37.5	36.6	27.2	29.9	20.0	760	781	773	3.1	45.5	57.61	59.66	43.6	23.85	17.73	nd	0.881	0.91	16.0	4.95	bl
										Most Affordable Point (MAP) Period																		
04/23/08	7:29	7295.88	46.2%	9.02	1.96	55.0	56.9	34.3	33.1	24.8	26.2	18.7	845	868	860	4.6	54.0	59.84	61.14	52.6	30.75	23.39	nd	0.905	0.97	21.3	6.29	bl
04/24/08	7:58	7318.55	46.7%	9.02	1.95	54.0	53.9	38.6	37.4	30.2	30.0	22.1	840	862	853	4.6	54.0	59.95	62.86	52.6	30.45	23.24	nd	0.905	1.05	21.1	5.95	bl unbalanced PX was operator error
04/25/08	7:53	7340.62	46.5%	9.00	1.95	54.5	52.9	38.8	37.7	27.6	29.9	21.6	842	865	858	4.4	53.5	60.41	62.76	52.5	30.44	23.22	nd	0.909	1.01	21.2	5.86	bl unbalanced PX was operator error
04/29/08	9:40	7364.91	46.8%	9.02	1.92	56.0	55.6	38.1	37.1	27.0	29.1	20.9	824	847	839	4.1	53.0	59.83	65.14	52.6	30.05	22.94	nd	0.915	1.17	20.8	6.39	bl unbalanced PX was operator error
04/30/08	10:48	7388.17	46.6%	9.02	1.92	56.0	55.1	39.3	38.2	27.3	29.8	20.8	833	858	841	4.1	53.0	60.26	64.96	52.6	30.12	22.95	nd	0.912	1.08	20.9	6.4	bl unbalanced PX was operator error
05/01/08	12:32	7412.33	46.6%	8.98	1.94	56.0	55.1	38.9	37.6	26.2	28.2	19.9	825	851	839	3.9	53.0	60.08	64.74	52.4	30.51	23.09	nd	0.905	1.25	20.8	6.38	bl unbalanced PX was operator error
05/02/08	8:36	7430.85	46.7%	9.02	1.93	56.0	53.1	41.3	40.2	27.8	29.9	20.8	828	855	840	4.1	53.0	60.03	65.42	52.6	30.29	23.03	nd	0.907	1.07	20.9	6	bl unbalanced PX was operator error
Toray membranes - TM800E-400 (Set 2)										**Membrane Ripening Period**																		
05/16/08	10:10	7475.52	42.5%	7.46	1.87	62.0	42.1	35.6	34.7	26.8	29.2	21.9	795	815	800	2.1	44.5	57.58	58.94	43.5	25.04	18.52	nd	0.893	0.94	16.7	4.35	bl
05/20/08	8:56	7554.92	42.6%	7.51	1.90	59.0	43.9	36.2	35.3	31.1	29.9	22.5	803	825	817	2.8	45.0	57.63	59.11	43.8	25.45	18.89	nd	0.892	0.99	17.0	4.55	bl
05/21/08	8:43	7578.71	42.5%	7.51	1.92	57.0	44.8	36.3	35.4	31.0	29.8	22.1	818	839	824	2.7	45.0	57.67	59.14	43.8	25.52	19.09	nd	0.895	0.94	17.2	4.68	bl
05/22/08	8:50	7602.85	42.6%	7.51	1.91	57.0	45.5	36.5	35.7	31.1	29.2	22.0	815	837	822	2.7	45.0	57.48	59.13	43.8	25.45	19.01	nd	0.893	0.93	17.2	4.85	bl
05/23/08	9:47	7622.36	42.6%	7.51	1.94	56.0	58.1	37.0	36.1	28.4	29.8	22.1	824	843	835	2.7	45.0	57.74	58.92	43.8	25.65	19.26	nd	0.894	0.97	17.4	5.51	bl
05/28/05	9:02	7644.67	42.5%	7.51	1.89	59.0	51.0	39.7	38.8	28.6	29.8	22.2	800	820	810	2.6	45.0	57.79	59.26	43.8	25.02	18.77	nd	0.893	0.97	16.9	5.23	bl
05/29/08	9:15	7666.9	42.6%	7.53	1.90	58.0	57.3	39.2	38.4	28.2	29.9	22.3	810	833	819	2.6	45.0	58.07	59.12	43.9	25.51	18.95	nd	0.891	0.96	17.0	6.06	bl
05/30/08	9:43	7689.43	42.5%	7.51	1.91	58.0	51.4	40.1	38.7	28.2	29.8	22.3	808	830	820	2.6	45.0	58.21	59.31	43.8	25.64	18.95	nd	0.893	0.97	17.1	5.25	bl
										12 Point flux and Recovery Period																		
06/03/08	10:40	7716.07	42.9%	6.07	1.85	56.0	42.8	35.4	34.9	29.8	29.9	25.1	784	800	895	1.6	37.0	45.40	47.06	35.4	20.93	14.88	nd	0.852	0.57	13.2	3.55	bl
06/04/08	9:04	7738.45	46.9%	6.03	1.90	56.0	47.2	36.1	35.5	29.9	29.9	24.9	811	821	818	2.6	37.0	39.85	49.06	35.2	21.27	15.18	nd	0.832	0.44	13.9	4.09	bl Unbalanced PX to compensate low flo
06/05/08	9:01	7760.47	49.8%	6.02	1.91	56.0	42.5	35.9	35.3	28.1	29.9	25.7	839	844	840	1.6	37.0	35.36	44.74	35.1	21.21	15.21	nd	0.844	0.34	13.9	3.47	bl Unbalanced PX to compensate low flo
06/06/08	8:58	7784.41	42.6%	7.51	1.92	56.0	52.4	39.0	38.2	28.4	29.8	22.1	820	840	828	3.6	45.0	58.07	58.96	43.8	25.57	19.09	nd	0.891	0.95	17.2	5.41	bl
06/10/08	8:40	7808.46	46.0%	7.51	1.91	62.0	48.3	37.1	36.5	28.1	29.8	23.8	828	846	840	2.6	44.5	50.05	51.34	43.8	25.41	18.95	nd	0.894	0.91	17.3	4.48	bl
06/11/08	9:58	7831.83	50.8%	7.49	1.96	62.0	45.6	37.7	36.9	27.8	29.7	24.3	863	879	870	2.3	44.5	42.37	49.35	43.7	26.21	19.41	nd	0.897	0.50	17.9	4.31	bl
06/12/08	9:19	7855.19	44.0%	8.98	2.06	62.0	54.1	29.3	28.3	17.9	17.9	9.2	850	880	862	2.3	52.5	69.91	66.56	52.4	32.21	24.47	nd	0.913	1.60	21.8	6.41	bl px inlet maxed out at value
06/24/08	8:40	7999.57	42.6%	8.98	2.02	60.0	53.0	41.9	40.9	38.9	29.6	19.1	840	875	857	3.8	52.0	69.15	70.62	52.4	31.91	24.02	nd	0.907	1.59	21.3	6.37	bl
06/13/08	9:38	7877.97	46.2%	9.00	2.04	62.0	55.4	38.1	37.1	25.3	25.0	18.6	878	900	886	2.6	53.0	60.26	61.10	52.5	32.13	24.29	nd	0.905	1.05	22.2	6.34	bl
06/17/08	13:15	7907.97	50.0%	9.00	2.14	60.0	54.5	40.5	39.5	30.8	29.5	23.0	950	965	955	4.5	52.0	51.45	52.48	52.5	33.75	25.50	nd	0.915	0.95	23.8	6	bv
06/18/08	15:05	7931.88	43.5%	9.91	2.16	60.0	51.0	37.0	35.5	23.5	21.5	10.8	890	925	910	4.5	58.0	76.97	75.22	57.8	37.46	28.32	nd	0.923	2.15	26.6	6.7	bv, valve on px open all the way
06/19/08	17:45	7956.48	45.7%	9.94	2.12	62.0	52.0	38.0	37.0	25.0	23.5	14.0	910	935	920	4	58.0	67.72	68.83	58	36.27	27.93	nd	0.927	1.50	26.6	6.5	bv
06/20/08	12:25	7975.14	49.3%	9.94	2.18	61.0	53.5	35.0	34.0	21.5	22.0	14.5	960	980	970	4.3	58.0	56.67	59.60	58	37.60	28.67	nd	0.927	1.00	28.3	6.4	bv
06/25/08	9:05	8022.25	42.6%	7.47	1.89	60.0	49.4	41.3	40.6	28.2	29.7	22.3	798	819	805	2.5	44.5	57.43	58.84	43.6	25.15	18.67	nd	0.887	0.95	16.8	5.07	bl
										Most Affordable Point (MAP) Period																		
06/27/08	8:32	8052.85	45.6%	8.97	2.04	60.0	46.9	41.1	40.0	31.4	29.2	21.2	875	899	882	3.6	52.5	60.34	62.35	52.3	31.99	24.18	nd	0.910	1.10	22.1	5.63	bl

Water Quality Data

TIME			pH			CONDUCTIVITY						TDS							TURBIDITY		SDI	BORON			OTHER					
		Operation		pH				Conductivity (mS/cm)						TDS (mg/L)					Turbidity (NTU)		Density Index		Boron (mg/L)			Inhibitor Pump	HP VFD	PX VFD	FEED VFD	
Date MM/DD/YY	Time hh:mm	Operation Time hh.hh	$pH_{F\text{-}sys}$ SC5	$pH_{P\text{-}sys}$ SC11	$pH_{C\text{-}sys}$ SC6	$C_{CF\text{-}out}$ SC3	$C_{F\text{-}PX\text{-}out}$ SC4	$C_{F\text{-}sys}$ SC5	$C_{P\text{-}sys}$ SC11	$C_{C\text{-}sys}$ SC6	$C_{C\text{-}PX\text{-}out}$ SC7	$TDS_{CF\text{-}out}$ SC3	$TDS_{F\text{-}PX\text{-}out}$ SC4	PX % Inc	$TDS_{F\text{-}sys}$ SC5	$TDS_{P\text{-}sys}$ SC11	$TDS_{C\text{-}sys}$ SC6	$TDS_{C\text{-}PX\text{-}out}$ SC7	$NTU_{MF\text{-}in}$ CART	$NTU_{CF\text{-}out}$ meter	$SDI_{CF\text{-}out}$ CART	$B_{CF\text{-}out}$ SC3	$B_{F\text{-}sys}$ SC5	$B_{P\text{-}sys}$ SC11	V_{TANK} (gallons)	Speed (gph)	Speed (Hertz)	Speed (Hertz)	Speed (Hertz)	Notes
Toray Membranes - TM800E-400												**Membrane Ripening Period**																		
05/30/07	11:25	4151.46	7.90	4.40	7.61	50.70	52.35	51.62	322.30	84.62	81.53	32.56	33.77	3.7%	33.23	154.20	60.80	57.95	nd	0.040	4.0	nd	nd	nd	7.0	60/75	44.85	33.08	61.20	
06/05/07	12:05	4199.43	7.88	6.77	7.73	49.81	53.23	51.63	353.50	84.01	82.22	31.88	34.41	7.9%	33.27	169.50	60.30	58.57	nd	0.057	4.0	nd	nd	nd	11.0	70/75	33.28	44.94	61.20	
06/06/07	10:56	4219.43	7.91	7.69	7.69	50.30	52.13	51.05	333.90	83.38	81.08	32.24	33.61	4.2%	32.84	159.80	59.75	57.53	nd	0.051	3.9	nd	nd	nd	8.0	70/75	44.92	33.13	61.20	bl
06/07/07	9:58	4240.04	7.73	6.01	7.6	50.13	52.25	51.10	328.80	83.46	81.03	32.16	33.67	4.7%	32.87	157.40	59.77	57.48	nd	0.044	3.6	nd	nd	nd	5.2	70/75	44.91	33.08	61.20	bl
06/11/07	12:08	4256.76	8.07	6.75	7.83	49.62	52.71	50.86	355.70	82.83	81.73	32.62	33.62	3.1%	32.73	170.80	59.72	57.68	1.852	0.067	4.0	nd	nd	nd	23.5	70/75	44.98	33.19	61.20	bv
06/12/07	9:51	4278.47	7.90	6.4	7.77	49.27	51.03	49.98	343.20	80.85	79.22	31.57	32.85	4.1%	32.10	164.40	57.44	55.84	1.345	0.086	3.7	nd	nd	nd	21.0	70/70	44.91	33.49	61.20	bl
06/13/07	12:00	4299.52	8.10	7.05	7.9	49.04	50.86	49.93	355.70	80.89	78.95	31.40	32.72	4.2%	32.06	170.30	57.39	55.57	0.933	0.093	4.1	nd	nd	nd	18.0	70/77	44.92	33.35	61.20	bv
06/14/07	9:15	4316.9	8.10	6.96	7.89	48.97	51.31	49.86	363.30	81.13	79.33	31.37	33.06	5.4%	32.04	174.20	57.62	55.92	0.961	0.095	4.1	nd	nd	nd	15.8	70/75	44.92	33.34	61.20	bv
												12 Point flux and recovery Period																		
06/19/07	10:30	4342.16	7.99	6.29	7.79	48.88	51.57	49.87	475.50	80.39	78.43	31.28	33.21	6.2%	32.03	229.30	57.01	55.18	1.056	0.067	3.4	nd	4.6	0.91	12.5	70/75	35.83	27.51	61.20	bl
06/20/07	10:31	4364.54	7.97	6.47	7.85	49.03	53.22	50.76	519.30	85.11	82.68	31.45	34.43	9.5%	32.73	251.10	61.44	59.01	1.122	0.092	3.9	nd	4.7	0.94	9.7	70/75	35.86	24.58	61.20	bl px out tds high. re-run point on 6-21
06/21/07	10:05	4386.46	7.87	6.39	7.77	48.78	51.86	49.95	453.00	83.80	80.41	31.23	33.42	7.0%	32.08	218.20	60.05	56.94	0.802	0.079	3.9	nd	4.6	0.88	7.5	70/75	35.85	25.02	61.20	bl
06/22/07	10:36	4410.98	7.73	5.96	7.57	48.86	51.73	49.91	492.80	87.71	82.49	31.30	33.35	6.5%	32.07	237.90	63.60	58.81	0.771	0.057	3.8	nd	4.6	0.95	24.3	70/75	36.08	22.45	61.20	bl
06/26/07	10:50	4433.05	7.79	5.91	7.66	48.83	51.12	49.78	371.80	80.13	78.28	31.27	32.94	5.3%	31.97	178.50	56.71	55.03	1.121	0.087	3.6	nd	4.8	0.80	21.8	70/75	45.19	34.07	61.20	bl
06/27/07	10:10	4454.51	7.91	6.22	7.72	48.81	51.39	49.91	397.80	84.82	82.69	31.26	33.11	5.9%	32.05	191.10	60.98	59.00	0.826	0.062	3.8	nd	4.7	0.81	18.5	70/75	45.20	29.77	61.20	bl
06/28/07	9:25	4476.05	7.96	6.32	7.75	48.85	51.71	49.99	429.60	88.34	85.65	31.30	33.35	6.5%	32.12	206.70	64.14	61.70	0.757	0.085	4.3	nd	4.7	0.86	15.8	70/75	45.19	27.13	61.20	bl
06/29/07	10:13	4497.56	8.02	6.14	7.83	48.63	51.44	50.06	307.40	81.49	80.02	31.15	33.15	6.4%	32.17	146.90	57.96	56.58	0.663	0.1	4.7	nd	4.7	0.67	12.6	70/75	54.01	38.91	61.20	bl
07/03/07	8:45	4520.82	7.93	6.03	7.78	48.84	51.07	49.63	335.80	84.83	82.52	31.27	32.88	5.1%	31.87	160.90	61.01	58.87	1.127	0.102	5.0	nd	4.7	0.74	9.7	70/75	53.99	34.69	61.20	bl
07/05/07	16:25	4527.33	8.12	7.84	7.88	49.18	52.07	50.38	385.80	90.10	87.82	31.54	33.59	6.5%	32.39	185.40	65.66	63.58	0.769	0.118	5.1	nd	4.3	0.79	9.0	50/70	53.99	31.14	61.20	bv
07/06/07	14:45	4532.55	8.13	6.59	7.87	49.05	50.73	49.99	290.70	81.29	79.88	31.46	32.65	3.8%	32.12	138.80	57.80	56.45	0.87	0.1	4.8	4.2	4.1	0.65	8.0	70/70	60.00	42.39	61.20	bv
07/09/07	13:50	4536.97	7.87	5.88	7.71	48.86	52.06	50.27	305.30	84.78	83.51	31.27	33.59	7.4%	32.27	145.80	60.93	59.72	1.383	0.082	4.3	nd	4.3	0.69	7.5	70/70	60.00	39.28	61.20	bl
07/10/07	16:40	4543.67	8.07	7.51	7.82	48.84	51.42	49.90	346.10	90.52	88.04	31.34	33.12	5.7%	32.06	165.80	66.15	63.79	1.204	0.142	4.9	nd	4.2	0.74	6.0	70/70	60.00	33.37	61.20	bv
												Most Affordable Point Period																		
07/24/07	17:25	4564.92	7.87	5.51	7.97	48.86	52.21	50.12	449.70	88.35	90.23	31.36	33.67	7.4%	32.23	216.60	65.88	64.07	0.889	0.074	3.8	nd	nd	0.95	25.8	70/70	54.70	30.56	60.17	bv
07/26/07	16:50	4591.4	7.84	5.98	7.85	48.85	51.69	49.95	460.50	90.25	88.03	31.30	33.38	6.6%	32.16	222.20	65.90	63.76	0.759	0.076	3.9	nd	nd	nd	21.9	70/70	54.67	30.21	60.95	bv
07/27/07	15:25	4607.78	7.94	5.82	7.78	48.84	51.86	50.11	425.50	90.00	88.08	31.30	33.47	6.9%	32.20	205.10	65.64	63.71	0.971	0.071	2.9	nd	5.3	nd	20.0	70/70	54.66	30.64	64.80	bv
08/07/07	9:36	4637.89	8.09	5.79	7.74	48.85	52.25	50.14	421.20	90.67	88.56	31.28	33.74	7.9%	32.27	202.60	66.29	64.33	1.08	0.096	4.9	nd	nd	nd	15.7	70/75	53.88	30.14	66.00	bl
08/08/07	9:27	4658.51	7.91	5.82	7.69	48.66	51.64	49.88	370.90	90.34	87.74	31.12	33.27	6.9%	32.02	177.90	65.93	63.54	0.76	0.086	4.5	nd	nd	nd	12.6	70/75	53.85	30.15	63.30	bl
08/09/07	9:37	4680.82	7.93	5.82	7.69	48.65	51.58	49.79	360.70	90.35	87.82	31.11	33.23	6.8%	31.97	173.00	65.94	63.69	1.173	0.187	14.9	nd	nd	nd	9.8	70/75	53.84	30.15	65.95	bl
08/10/07	9:24	4702.05	7.97	5.96	7.73	48.69	51.66	49.84	360.10	90.02	87.51	31.12	33.30	7.0%	32.00	172.70	65.68	63.35	0.672	0.103	5.1	4.6	4.5	0.82	6.5	75/85	53.85	30.21	62.85	bl
08/14/07	2:14	4721.44	7.97	6.07	7.74	48.89	51.86	50.02	413.70	89.63	87.44	31.28	33.42	6.8%	32.12	198.80	65.36	63.27	0.789	0.074	4.7	4.6	4.7	0.89	23.0	80/85	53.81	30.35	61.85	bl
08/15/07	10:18	4740.31	7.91	6.27	7.67	48.95	51.86	50.01	377.30	90.15	87.89	31.29	33.43	6.8%	32.14	181.20	65.80	63.72	0.865	0.065	3.9	nd	nd	nd	20.2	75/80	53.82	30.33	62.29	bl
08/16/07		4761.36	7.82	5.82	7.61	48.77	51.74	49.92	344.60	90.69	88.25	31.21	33.34	6.8%	32.06	165.10	66.27	64.03	0.799	0.058	4.0	nd	nd	nd	17.3	70/75	53.82	30.26	61.06	bl
08/17/07	9:35	4784.63	7.81	5.83	7.62	48.67	51.77	50.04	345.40	90.45	87.94	31.14	33.36	7.1%	32.15	165.30	66.11	63.71	0.624	0.061	4.3	4.5	5.3	2.5	14.2	70/75	53.79	30.27	61.94	bl
												MAP Average		7%		188.83						MAP Average		1.19						
												MAP Maximum		8%		222.20						MAP Maximum		2.5						
												MAP Minimum		6%		165.10						MAP Minimum		0.79						
Koch membranes - TFC 2822HF-400												**Membrane Ripening Period**																		
08/22/07	9:23	4805.31	7.91	7.52	7.73	48.86	50.91	49.67	529.30	80.90	78.61	31.30	32.74	4.6%	31.88	256.00	57.42	55.31	0.543	0.068	4.0	nd	nd	nd	11.3	70/75	45.12	34.39	59.82	bl
08/23/07	9:27	4827.84	7.93	7.54	7.75	48.88	50.81	49.57	516.70	80.84	78.51	31.29	32.69	4.5%	31.83	249.70	57.36	55.22	0.791	0.067	3.9	nd	nd	nd	8.0	70/75	45.12	34.39	60.76	bl
08/24/07	10:05	4850.75	7.88	7.36	7.69	49.04	50.86	49.79	531.20	81.01	78.74	31.42	32.73	4.2%	31.97	256.90	57.51	55.45	0.803	0.066	3.9	nd	nd	nd	5.0	70/75	45.12	34.32	59.93	bl
08/27/07	1:35	4856.41	7.81	6.95	7.64	48.72	50.65	49.53	590.40	81.14	78.76	31.17	32.55	4.4%	31.78	286.00	57.62	55.45	0.482	0.061	3.5	nd	nd	nd	24.0	70/75	45.09	34.34	55.24	bl
08/28/07	8:45	4875.44	7.84	6.73	7.66	48.78	50.79	49.56	546.80	80.80	78.83	31.28	32.69	4.5%	31.79	264.60	57.34	55.48	0.563	0.059	2.3	nd	nd	nd	21.5	70/75	45.12	34.57	59.93	bv
08/29/07	14:40	4903.70	7.77	6.31	7.59	48.56	50.62	49.43	524.20	81.15	78.83	31.10	32.56	4.7%	31.76	253.20	57.58	55.35	0.671	0.043	2.7	4.5	4.5	1.3	17.5	70/75	45.12	34.39	60.18	bv
08/30/07	8:35	4920.07	7.80	6.37	7.63	48.79	50.72	49.54	497.70	80.85	78.55	31.22	32.62	4.5%	31.78	239.90	57.36	55.16	0.691	0.042	1.9	nd	nd	nd	15.0	70/75	45.12	34.48	56.96	bv
08/31/07	10:25	4942.80	7.85	6.38	7.60	48.98	50.90	49.72	489.40	80.97	78.58	31.37	32.74	4.4%	31.90	236.30	57.44	55.31	0.645	0.042	2.6	nd	nd	nd	12.0	70/75	45.12	34.62	57.92	bv
09/05/07	2:25	4977.42	7.81	6.91	7.67	48.92	51.24	49.87	571.60	80.47	78.49	31.35	32.95	5.1%	32.03	276.60	57.00	55.15	0.643	0.065	3.0	nd	nd	nd	7.5	70/75	45.12	35.32	60.44	bl
09/06/07	9:20	4994.74	7.78	6.41	7.64	48.90	51.32	49.96	542.70	80.77	78.64	31.32	33.02	5.4%	32.08	262.50	57.25	55.33	0.755	0.07	3.1	4.5	4.5	1.4	5.1	70/75	45.14	35.40	56.85	bl
09/07/07	10:05	5019.44	7.93	7.36	7.73	49.03	51.03	49.85	624.70	80.35	78.44	31.43	32.90	4.7%	32.03	302.60	56.87	55.13	0.894	0.051	3.1	nd	nd	nd	22.1	70/75	45.12	35.07	65.25	bv
												12 Point flux and recovery Period																		
09/11/07	13:10	5044.56	7.87	6.23	7.78	48.82	51.77	49.97	798.40	80.46	78.67	31.24	33.35	6.8%	32.09	388.30	57.07	55.44	0.384	0.039	2.7	4.8	4.7	1.6	18.5	70/75	35.71	28.45	54.30	bv
09/12/07	16:25	5071.85	7.83	6.18	7.66	48.73	52.46	50.23	818.60	84.47	81.68	31.14	33.82	8.6%	32.23	400.70	60.61	58.02	0.427	0.036	2.7	4.7	4.7	1.6	15.0	70/75	35.74	25.68	57.60	bv px out tds high.
10/03/07	9:45	5269.35	7.92	6.84	7.75	48.73	50.90	49.47	841.70	82.58	79.11	31.21	32.83	5.2%	31.76	411.80	58.95	55.73	0.567	0.055	2.2	nd	nd	nd	9.5	70/75	35.86	26.10	58.72	bv
09/13/07	16:10	5094.23	7.77	6.49	7.58	48.70	54.98	51.05	881.60	90.32	87.05	31.25	35.75	14.4%	32.86	431.70	65.91	62.70	0.285	0.038	3.2	4.5	4.8	1.6	12.0	70/75	35.85	23.10	51.27	bv px out tds high.
10/19/07	9:33	5438.54	7.84	6.31	7.71	48.89	51.32	49.77	519.9	81.02	78.94	31.27	33.07	5.8%	31.96	251.20	57.45	55.57	0.648	0.176	6.8	nd	nd	nd	10.2	70/75	45.06	35.57	66.00	bl
10/10/07	16:08	5303.34	7.78	6.24	7.63	48.60	51.29	49.81	598.80	80.43	78.89	31.02	32.99	6.4%	31.95	290.00	56.95	55.53	0.588	0.093	3.8	nd	nd	nd	27.7	70/75	45.28	36.02	56.09	bl
10/11/07	8:52	5322.08	7.78	6.21	7.65	49.04	50.79	49.58	563.9	81.09	78.79	31.41	32.68	4.0%	31.83	273.00	57.63	55.49	0.699	0.103	3.2	nd	nd	nd	25.1	70/75	45.09	34.72	60.49	bl
10/18/07	9:57	5414.92	7.81	6.27	7.67	48.84	51.15	49.79	532.5	80.94	78.87	31.26	32.93	5.3%	31.98	253.10	57.45	55.54	0.569	0.180	7.6	nd	nd	nd	13.1	70/75	45.06	35.63	58.76	bl
10/02/07	8:40	5244.29	7.88	6.19	7.73	48.83	51.08	49.63	634.20	80.86	78.98	31.30	32.91	5.1%	31.87	307.80	57.37	55.63	0.559	0.055	3.6	nd	nd	nd	12.2	70/75	45.26	34.72	58.75	bv
09/14/07	16:45	5107.14	7.84	6.50	7.65	48.73	51.43	50.00	588.40	81.15	79.23	31.24	33.10	6.0%	32.12	284.70	57.62	55.84	0.447	0.037	3.0	4.6	4.7	1.3	10.5	70/75	45.22	34.92	58.75	bv
09/17/07	14:55	5113.46	7.94	7.21	7.76	48.75	51.46	49.78	666.80	84.89	82.45	31.20	33.09	6.1%	31.97	323.70	60.98	58.72	0.725	0.080	3.1	4.9	4.8	1.4	9.7	70/75	45.06	31.27	53.83	bl

Water Quality Data

TIME			pH			CONDUCTIVITY						TDS							TURBIDITY		SDI	BORON			OTHER					
				pH				Conductivity (mS/cm)							TDS (mg/L)				Turbidity (NTU)		Density Index	Boron (mg/L)				Inhibitor Pump			FEED VFD	
Date MM/DD/YY	Time hh:mm	Operation Time hh.hh	$pH_{F\text{-}sys}$ SC5	$pH_{P\text{-}sys}$ SC11	$pH_{C\text{-}sys}$ SC6	$C_{CF\text{-}out}$ SC3	$C_{F\text{-}PX\text{-}out}$ SC4	$C_{F\text{-}sys}$ SC5	$C_{P\text{-}sys}$ SC11	$C_{C\text{-}sys}$ SC6	$C_{C\text{-}PX\text{-}out}$ SC7	$TDS_{CF\text{-}out}$ SC3	$TDS_{F\text{-}PX\text{-}out}$ SC4	PX % Inc	$TDS_{F\text{-}sys}$ SC5	$TDS_{P\text{-}sys}$ SC11	$TDS_{C\text{-}sys}$ SC6	$TDS_{C\text{-}PX\text{-}out}$ SC7	$NTU_{MF\text{-}in}$ CART	$NTU_{CF\text{-}out}$ meter	$SDI_{CF\text{-}out}$ CART	$B_{CF\text{-}out}$ SC3	$B_{F\text{-}sys}$ SC5	$B_{P\text{-}sys}$ SC11	V_{TANK} (gallons)	Speed (gph)	HP VFD Speed (Hertz)	PX VFD Speed (Hertz)	VFD Speed (Hertz)	Notes
10/04/07	16:10	5296.06	8.00	7.23	7.70	48.72	50.94	49.48	749.90	88.17	85.08	31.19	32.75	5.0%	31.80	365.20	61.16	59.26	0.684	0.094	4.3	nd	nd	nd	5.5	7075	45.09	28.14	60.73	bv
09/18/07	9:20	5131.86	7.98	7.05	7.75	49.02	52.94	50.49	780.30	90.39	88.07	31.42	34.22	8.9%	32.47	380.60	66.02	63.85	0.398	0.074	3.2	4.7	4.9	1.6	7.5	70/75	45.05	27.51	56.27	bl px out tds high.
09/19/07	12:37	5150.4	8.01	7.65	7.84	49.16	51.21	49.91	563.30	80.79	78.97	31.48	32.96	4.7%	32.07	272.70	57.27	55.67	0.754	0.081	4.3	4.7	4.8	1.3	4.6	70/75	53.65	40.84	62.99	bl
09/20/07	9:52	5170.33	7.96	7.14	7.76	48.91	51.19	49.83	563.20	84.88	82.40	31.32	32.96	5.2%	32.01	272.70	61.01	58.74	0.552	0.076	3.6	4.8	4.9	nd	22.7	70/75	53.63	36.18	61.21	bl
09/21/07	11:33	5194.57	7.96	6.85	7.73	48.86	51.39	49.87	633.10	90.52	87.67	31.25	33.11	6.0%	32.02	307.00	66.09	63.46	0.514	0.079	3.6	4.7	4.9	1.4	19.1	70/75	53.58	31.29	60.32	bl
10/17/07	9:15	5392.50	7.83	6.17	7.69	48.91	50.93	49.73	396.6	80.18	79.02	31.28	32.79	4.8%	31.92	190.50	56.75	55.64	1.377	0.201	11.4	nd	nd	nd	16.3	70/75	60.00	46.56	66.00	bl re-run point to avoid FWF water quality is
09/25/07	14:27	5205.27	8.04	7.73	7.86	48.88	51.52	49.81	558.20	80.25	79.21	31.25	33.17	6.1%	31.96	270.10	56.83	55.79	0.865	0.078	3.4	4.6	4.4	1.2	17.6	70/75	60.00	46.05	64.98	bl
10/16/07	14:48	5375.85	7.93	6.61	7.77	48.87	51.76	49.99	470.6	84.56	83.08	31.21	33.36	6.9%	32.09	226.70	60.71	59.31	0.722	0.109	3.6	nd	nd	nd	18.5	70/75	60.00	41.48	66.00	bl re-run point to avoid FWF water quality is
09/26/07	17:05	5212.84	8.07	7.22	7.85	48.73	51.61	49.61	607.80	84.73	83.25	31.17	33.25	6.7%	31.87	295.10	60.73	59.35	0.692	0.054	3.2	4.3	4.3	1.3	16.5	70/75	60.00	40.40	65.23	bv
10/11/07	14:25	5326.13	7.76	6.26	7.64	49.31	52.03	50.26	518.8	90.25	87.35	31.55	33.29	5.5%	32.18	250.50	65.72	63.10	0.944	0.090	3.2	nd	nd	nd	24.5	70/75	60.00	35.70	58.71	bl re-run point to avoid FWF water quality is
10/12/07	9:28	5345.20	7.81	6.16	7.62	48.78	51.61	50.02	492.9	90.08	87.76	31.24	33.30	6.6%	32.14	238.00	65.74	63.58	0.952	0.172	7.2	nd	nd	nd	22.1	70/75	60.00	36.03	66.00	bl re-run point to avoid FWF water quality is
09/27/07	15:55	5221.52	8.05	7.03	7.8	48.74	51.60	49.73	668.50	90.59	88.48	31.23	33.26	6.5%	31.93	324.20	66.16	64.15	0.647	0.054	4.0	4.2	4.2	1.3	15.5	70/75	59.94	34.42	65.46	bv
												Most Affordable Point (MAP) Period																		
10/30/07	15:15	5470.73	7.98	6.89	7.79	48.66	50.51	49.38	533.10	83.31	81.09	30.90	32.38	4.8%	31.59	257.40	59.49	57.36	0.563	0.128	4.6	nd	nd	nd	5.9	70/75	54.17	37.88	62.23	bl
10/31/07	10:33	5488.11	7.91	6.41	7.73	48.78	50.82	49.53	514.10	84.12	81.58	31.23	32.73	4.8%	31.78	248.40	60.28	57.96	0.506	0.117	4.0	4.5	4.5	1.2	22.6	70/75	54.14	37.91	61.22	bl
11/01/07	10:31	5510.30	7.93	6.60	7.75	48.86	51.27	49.78	543.90	84.12	82.01	31.31	33.02	5.5%	31.99	263.20	60.32	58.37	0.38	0.106	3.2	nd	nd	nd	19.7	70/75	53.69	37.59	61.08	bl
11/02/07	10:29	5532.53	8.01	6.95	7.81	48.93	51.37	49.73	551.40	83.85	82.03	31.35	33.11	5.6%	31.95	266.90	60.12	58.41	0.385	0.105	3.2	4.4	4.5	1.3	16.5	70/75	53.70	37.85	60.88	bl
11/06/07	14:17	5556.91	7.94	6.85	7.73	48.87	51.90	50.01	560.80	84.77	82.83	31.53	33.44	6.1%	32.11	271.20	60.89	59.05	0.566	0.1	3.1	nd	nd	nd	13.2	70/75	53.73	37.46	60.04	bl
11/07/07	10:18	5574.92	7.86	6.53	7.68	48.77	51.78	49.76	533.70	84.30	82.41	31.23	33.39	6.9%	31.97	258.10	60.55	58.72	0.482	0.107	3.6	4.3	4.5	1.3	10.5	70/75	53.73	37.65	58.98	bl
11/08/07	9:37	5596.39	7.84	6.41	7.66	48.79	51.20	49.58	506.90	84.34	82.15	31.26	33.03	5.7%	31.82	244.90	60.55	58.51	0.465	0.106	3.2	nd	nd	nd	7.6	70/75	53.73	37.53	59.36	bl
11/09/07	13:30	5621.89	7.85	6.52	7.65	48.47	51.13	49.49	497.90	83.39	81.49	30.92	32.86	6.3%	31.71	240.30	59.63	57.79	0.399	0.099	3.2	nd	4.5	1.2	4.3	70/75	53.85	38.12	59.77	bl
11/12/07	14:43	5626.18	7.92	6.95	7.75	48.37	51.12	49.52	558.30	83.01	81.01	30.85	32.83	6.4%	31.63	269.80	59.29	57.39	0.776	0.113	3.7	4.5		1.3	24.0	70/75	53.85	38.26	57.76	bl
11/13/07	15:52	5651.33	7.90	6.61	7.71	48.21	51.27	49.31	513.40	82.69	80.98	30.71	32.92	7.2%	31.49	247.70	58.91	57.36	0.523	0.114	3.8	nd	nd	nd	20.9	70/75	53.82	38.75	63.06	bl
11/14/07	10:30	5668.26	7.83	6.39	7.66	48.76	51.40	49.61	497.50	83.09	81.26	31.04	33.04	6.4%	31.77	240.00	59.33	57.64	0.486	0.105	3.2	4.1	3.9	1.3	18.0	70/75	53.82	38.79	60.12	bl
11/15/07	8:34	5668.52	7.76	6.32	7.63	48.97	51.84	50.01	493.30	84.35	82.26	31.38	33.41	6.5%	32.09	238.40	60.54	58.54	0.431	0.103	2.9	nd	nd	nd	15.4	70/75	53.85	38.73	60.55	bl
11/16/07	10:07	5712.33	7.82	6.36	7.64	48.77	51.42	49.57	495.50	83.67	81.79	31.21	33.12	6.1%	31.81	239.30	60.02	58.17	0.398	0.102	2.9	4.0	3.9	1.3	9.6	70/75	53.85	38.32	61.88	bl
												Base Line Test																		
11/19/07	16:15	5719.24	7.93	7.16	7.76	48.94	51.52	49.74	617.20	80.16	78.35	31.30	33.21	6.1%	31.96	299.30	56.77	55.08	0.406	0.11	3.4	nd	nd	nd	8.3	70/75	44.89	36.33	55.32	bl
11/20/07	14:52	5741.85	8.04	7.73	7.85	48.93	51.09	49.62	651.10	80.49	78.41	31.32	32.91	5.1%	31.85	315.90	57.02	55.11	0.456	0.113	3.2	nd	nd	nd	5.6	70/75	44.86	35.33	58.25	bl
11/21/07	10:07	5761.11	7.94	7.35	7.78	48.81	51.08	49.59	626.50	80.01	78.03	31.27	32.91	5.2%	31.84	303.90	56.64	54.78	0.382	0.116	3.9	4.1	nd	1.5	23.1	70/75	44.88	35.63	61.51	bl
											MAP Average	33.02	6.0%			252.74						MAP Average		1.27						
											MAP Maximum	33.44	7.2%			271.20						MAP Maximum		1.30						
											MAP Minimum	32.38	4.8%			238.40						MAP Minimum		1.20						
Hydranautics membranes - SWC5												**Membrane Ripening Period**																		
11/28/07	3:05	5762.47	8.00	8.25	7.81	50.99	53.93	52.26	213.70	84.90	83.20	32.85	34.86	6.1%	33.67	101.30	61.21	59.41	0.934	0.144	5.3	nd	nd	nd	22.3	80/80	44.90	33.98	55.13	jm, hyd memb 1st point
11/29/07	15:25	5772.96	7.93	6.08	7.75	50.94	53.60	52.21	199.70	85.32	82.98	32.65	34.57	5.9%	33.47	94.27	61.36	59.74	0.633	0.077	4.5	nd	nd	nd	20.5	100/100	44.85	33.84	56.12	bv
11/30/07	14:30	5795.87	7.96	6.18	7.8	51.05	53.95	52.25	197.60	85.48	83.48	32.84	34.88	6.2%	33.69	92.93	61.54	59.62	0.473	0.071	4.5	4.9	4.7	0.72	16.5	80/80	44.85	33.81	59.95	bv
12/03/07	16:20	5803.76	7.95	6.20	7.79	51.36	53.57	52.17	212.60	85.45	83.02	33.05	34.62	4.8%	33.70	100.80	61.49	59.34	0.439	0.08	5.1	nd	nd	nd	15.5	80/80	44.88	33.49	56.08	bv
12/04/07	9:35	5821.21	7.89	6.01	7.73	48.73	50.78	49.44	200.10	80.56	78.47	31.19	32.71	4.9%	31.72	94.91	57.16	55.13	0.801	0.082	4.7	nd	nd	nd	12.8	80/80	44.88	33.63	58.67	bl
12/05/07	8:39	5842.23	7.88	5.99	7.74	51.38	53.65	52.13	197.80	85.30	83.08	33.09	34.73	5.0%	33.64	93.81	61.40	59.39	1.683	0.09	6.5	5.0	4.5	0.73	9.3	80/80	44.87	33.68	58.53	bl
12/06/07	9:25	5865.23	7.91	6.01	7.74	51.38	53.69	52.07	200.10	85.11	82.86	33.09	34.73	5.0%	33.61	94.84	61.24	59.19	1.456	0.088	4.5	nd	nd	nd	5.8	80/80	44.86	33.78	58.56	bl
12/07/07	8:43	5886.52	7.81	5.96	7.67	51.51	53.68	52.2	203.2	85.46	83.06	33.18	34.71	4.6%	33.68	96.49	61.60	59.37	0.738	0.072	3.6	4.9	4.8	0.76	22.6	80/80	44.87	33.38	59.43	bl
12/10/07	15:57	5893.98	7.83	5.98	7.66	50.91	53.39	52.05	215.9	85.08	82.79	32.75	34.49	5.3%	33.54	102.30	61.18	59.01	0.535	0.040	2	nd	nd	nd	21.4	80/80	44.88	33.72	56.05	bl
12/11/07	14:55	5916.95	7.81	5.93	7.67	50.81	53.29	52.03	204.8	84.96	82.78	32.66	34.41	5.4%	33.51	96.68	61.02	58.98	0.573	0.048	1.9	nd	nd	nd	17.7	80/80	44.89	33.54	59.24	bl
12/12/07	10:12	5934.55	7.88	6.05	7.71	51.39	53.68	52.23	205.5	85.27	83.05	33.09	34.75	5.0%	33.71	97.41	61.39	59.35	0.235	0.046	2.5	4.5	4.7	0.75	15.1	80/80	44.91	33.69	57.32	bl
12/13/07	9:32	5957.70	7.89	6.07	7.74	51.46	53.69	52.12	202.3	85.61	83.39	33.16	34.76	4.8%	33.64	96.04	61.71	59.66	0.266	0.045	2.4	nd	nd	nd	11.6	80/80	44.93	33.49	59.93	bl
12/14/07	9:03	5979.32	7.87	6.02	7.72	51.56	53.71	52.1	198.7	85.35	82.95	33.26	34.83	4.7%	33.65	94.38	61.55	59.27	0.485	0.051	2.9	4.7	4.6	0.75	8.1	80/80	44.94	33.49	57.81	bl
												12 Point flux and recovery Period																		
01/04/08	10:29	6044.24	7.87	6.11	7.71	51.19	53.58	52.14	243.2	83.41	81.24	32.96	34.66	5.2%	33.65	115.50	59.77	57.73	0.362	0.054	2.8				20.1	70/75	36.13	28.25	57.52	bl
01/08/08	13:39	6073.15	7.86	6.06	7.68	50.82	53.91	52.07	267.7	87.51	83.61	32.70	34.91	6.8%	33.59	127.70	63.43	59.86	2.958	0.049	2.8	4.4	5.4	0.87	16.5	70/75	36.12	25.37	51.67	bl
01/09/08	14:40	6098.28	7.80	6.09	7.60	50.43	53.19	51.44	289.5	91.96	83.57	32.21	34.22	6.2%	33.04	137.70	67.25	59.72	1.820	0.046	2.3	4.8	4.7	0.95	13.9	70/75	22.15	36.13	54.62	bv
01/10/08	9:34	6117.08	7.86	5.94	7.69	51.12	53.16	51.78	196.2	84.59	82.51	32.92	34.42	4.6%	33.41	93.24	60.80	58.86	1.696	0.044	2.3	4.5	4.6	0.71	11.5	70/75	45.35	33.52	62.75	bl
01/11/08	10:39	6140.48	7.83	5.92	7.66	50.92	53.96	51.71	212.7	89.34	87.16	32.78	34.93	6.6%	33.34	100.80	65.06	63.07	1.689	0.049	2.9	4.4	4.6	0.75	8.7	70/75	45.33	30.04	54.59	bl
01/15/08	10:04	6165.01	7.82	5.86	7.61	51.21	53.73	51.78	232.1	94.29	88.75	32.97	34.77	5.5%	33.39	110.30	69.56	64.49	1.622	0.044	2.7	5.4	5	0.77	6	70/75	45.35	26.52	57.19	bl
01/16/08	10:36	6187.46	7.82	5.81	7.65	50.96	53.56	51.64	165.7	85.17	83.46	32.79	34.65	5.7%	33.28	78.46	61.34	59.72	1.362	0.049	2.6	4.9	4.8	0.59	13.9	70/75	53.96	39.64	60.84	bl
01/17/08	9:00	6208.13	7.85	5.82	7.68	51.36	53.93	51.89	169.9	90.43	87.75	33.10	34.94	5.6%	33.51	80.77	66.14	63.61	1.789	0.051	2.7	4.7	4.6	0.60	11.2	70/75	54.06	34.92	58.45	bl
01/18/08	9:45	6229.53	7.79	5.79	7.60	51.11	53.99	51.76	182.5	95.49	91.59	32.90	34.93	6.2%	33.38	86.22	70.66	67.08	2.419	0.050	2.7	4.6	4.5	0.64	8.7	70/75	54.05	30.76	57.09	bl
01/23/08	9:28	6253.18	7.87	5.86	7.74	50.63	53.47	51.22	149.8	83.58	82.57	32.57	34.54	6.0%	33.02	70.85	60.01	58.94	1.372	0.059	2.8	6.7	5.2	0.57	6.1	70/75	59.82	45.21	65.92	bl
01/30/08	10:33	6292.08	7.92	5.92	7.72	50.87	53.32	51.42	168.1	89.06	86.87	32.74	34.49	5.3%	33.12	79.48	64.82	62.81	2.580	0.046	3.1	5.1	5.2	0.61	22.6	70/75	60.00	39.08	62.24	bl
01/31/08	9:24	6312.09	7.91	5.84	7.67	51.16	53.39	51.66	177.7	94.83	91.32	32.96	34.61	5.0%	33.32	84.28	70.11	66.85	2.683	0.045	2.6	5.1	4.9	0.64	20.5	70/75	60.00	34.01	59.29	bl
												Base Line Test																		
02/01/08	9:17	6334.14	7.87	5.93	7.73	51.18	53.31	51.66	200.7	85.13	82.91	32.97	34.55	4.8%	33.31	95.23	61.39	59.24	1.692	0.045	2.7	4.9	nd	0.74	18	70/75	44.86	33.40	55.41	bl

Water Quality Data

TIME			pH			CONDUCTIVITY						TDS							TURBIDITY		SDI	BORON			OTHER					
				pH				Conductivity (mS/cm)							TDS (mg/L)				Turbidity (NTU)		Density Index		Boron (mg/L)			Inhibitor Pump			FEED VFD	
Date MM/DD/YY	Time hh:mm	Operation Time hh.hh	$pH_{F\text{-}sys}$ SC5	$pH_{P\text{-}sys}$ SC11	$pH_{C\text{-}sys}$ SC6	$C_{CF\text{-}out}$ SC3	$C_{F\text{-}PX\text{-}out}$ SC4	$C_{F\text{-}sys}$ SC5	$C_{P\text{-}sys}$ SC11	$C_{C\text{-}sys}$ SC6	$C_{C\text{-}PX\text{-}out}$ SC7	$TDS_{CF\text{-}out}$ SC3	$TDS_{F\text{-}PX\text{-}out}$ SC4	PX % Inc	$TDS_{F\text{-}sys}$ SC5	$TDS_{P\text{-}sys}$ SC11	$TDS_{C\text{-}sys}$ SC6	$TDS_{C\text{-}PX\text{-}out}$ SC7	$NTU_{MF\text{-}in}$ CART	$NTU_{CF\text{-}out}$ meter	$SDI_{CF\text{-}out}$ CART	$B_{CF\text{-}out}$ SC3	$B_{F\text{-}sys}$ SC5	$B_{P\text{-}sys}$ SC11	V_{TANK} (gallons)	Speed (gph)	HP VFD Speed (Hertz)	PX VFD Speed (Hertz)	Speed (Hertz)	Notes
												Most Affordable Point (MAP) Period																		
02/05/08	2:31	6365.24	7.78	5.78	7.59	50.33	53.28	51.62	174.1	89.82	87.16	32.33	34.29	6.1%	33.08	81.95	65.37	62.88	3.942	0.037	2.5	nd	nd	nd	15.1	70/75	54.49	35.36	62.34	bl
02/06/08	4:43	6389.70	7.89	5.98	7.69	50.86	53.19	51.5	183.4	89.49	86.65	32.71	34.33	5.0%	33.13	86.49	65.17	62.61	2.692	0.046	2.8	nd	nd	nd	12.4	70/75	53.75	34.89	57.89	bl
02/07/08	10:39	6407.62	7.76	5.76	7.58	51.09	53.26	51.71	175.2	89.48	86.67	32.89	34.44	4.7%	33.34	82.96	65.21	62.64	2.022	0.044	2.7	nd	nd	nd	10.8	70/75	53.74	35.19	59.68	bl
02/08/08	11:15	6430.41	7.81	5.86	7.61	50.91	53.03	51.54	181.5	89.29	86.36	32.73	34.25	4.6%	33.19	85.91	65.05	62.36	1.010	0.051	2.7	nd	nd	nd	8.2	70/75	53.78	34.86	58.09	bl
02/12/08	9:12	6455.29	7.77	5.82	7.59	51.05	53.55	51.76	189.8	90.05	87.42	32.86	34.66	5.5%	33.37	89.91	65.71	63.29	2.455	0.051	3.8	nd	nd	nd	5.7	70/75	54.13	35.04	60.85	bl
02/13/08	11:00	6479.09	7.74	5.79	7.54	51.23	53.79	51.81	185.1	89.88	87.41	32.99	34.83	5.6%	33.41	87.81	65.59	63.29	1.828	0.049	3.1	nd	nd	nd	22.8	70/75	54.18	34.95	59.26	bl
02/14/08	11:37	6501.86	7.78	5.82	7.61	50.97	53.3	51.67	183.5	89.86	87.18	32.79	34.46	5.1%	33.31	86.82	65.53	63.09	1.811	0.051	3.3	nd	nd	nd	20.2	70/75	54.20	34.79	58.69	bl
02/15/08	9:22	6523.60	7.85	5.87	7.64	51.23	53.63	51.85	184.8	89.81	87.36	32.98	34.73	5.3%	33.46	87.61	65.49	63.25	1.307	0.050	3.3	nd	nd	nd	17.9	70/75	54.21	35.01	61.39	bl
02/19/08	0:00	6547.64	7.89	6.43	7.67	51.1	53.23	51.56	194.4	90.53	87.49	32.89	34.37	4.5%	33.24	92.05	66.14	63.17	0.792	0.048	3.5	nd	nd	nd	15	70/75	54.21	34.34	59.02	bv
02/20/08	10:21	6566.62	7.83	5.85	7.64	51.06	53.72	51.62	191.6	89.64	87.12	32.86	34.74	5.7%	33.27	90.82	65.35	63.04	0.743	0.045	2.8	nd	nd	0.7	13.3	70/75	54.20	34.98	61.37	bl
												MAP Average		5.2%		87.23														
												MAP Maximum		6.1%		92.05														
												MAP Minimum		4.5%		81.95														
												Base Line Test										nd	nd	nd						
02/21/08	9:27	6587.81	7.82	6.02	7.67	51.11	53.37	51.59	205.1	84.55	82.58	32.89	34.52	5.0%	33.27	97.16	60.74	58.95	0.880	0.046	2.9	nd	nd	nd	10.8	70/75	44.94	33.87	56.11	bl
02/22/08	10:09	6612.11	7.85	5.97	7.69	50.78	53.04	51.45	199.4	84.15	81.82	32.67	34.28	4.9%	33.14	94.44	60.41	58.27	2.617	0.045	3.5	nd	nd	0.76	8	70/75	45.33	33.90	59.02	bl
DOW-FILMTEC membranes - Hybrid												**Membrane Ripening Period**																		
02/27/08	11:38	6632.19	7.83	6.91	7.68	50.72	53.09	51.59	530.5	83.84	81.88	32.64	34.27	5.0%	33.22	256.50	60.08	58.29	1.631	0.048	3				6	70/75	44.91	33.81	55.96	bl
02/28/08	9:37	6654.18	7.86	6.47	7.69	51.01	53.14	51.55	533.4	84.61	82.38	32.83	34.35	4.6%	33.22	257.80	60.84	58.77	1.516	0.046	2.8				3.8	70/75	44.96	33.23	58.17	bl
02/29/08	10:00	6676.80	7.76	6.45	7.61	50.94	53.19	51.59	550.1	84.36	82.26	32.79	34.37	4.8%	33.25	266.10	60.55	58.65	1.285	0.045	2				21.8	70/75	44.97	33.52	56.34	bl
03/04/08	9:42	6699.74	7.78	6.41	7.65	51.03	53.65	51.68	567.5	83.76	82.05	32.84	34.69	5.6%	33.31	274.60	60.05	58.46	1.527	0.050	2.8				19.2	70/75	44.96	34.39	59.97	bl
03/05/08	9:49	6721.78	7.80	6.32	7.66	51.02	53.31	51.68	566.7	84.33	82.25	32.85	34.45	4.9%	33.31	273.80	60.53	58.65	1.202	0.052	3.1				16.6	70/75	44.97	33.49	56.43	bl
03/06/08	10:06	6746.06	7.79	6.37	7.63	51.03	53.84	51.77	561.1	84.14	82.35	32.83	34.82	6.1%	33.38	271.60	60.39	58.72	1.258	0.050	3				14	70/75	44.97	34.31	59.08	bl
03/07/08	10:48	6768.77	7.81	6.44	7.66	50.91	53.14	51.47	577.6	84.57	82.39	32.74	34.34	4.9%	33.16	279.60	60.75	58.77	0.819	0.056	3.6				11.7	70/75	44.94	33.42	56.38	bl
03/11/08	10:40	6794.70	7.81	6.32	7.65	51.23	53.49	51.98	592.7	85.04	82.87	32.99	34.57	4.8%	33.51	287.10	61.17	59.17	1.208	0.048	3.2				8.2	70/75	44.97	33.49	56.47	bl
03/12/08	13:50	6820.87	7.78	6.33	7.63	51.26	53.56	51.9	579.5	85.19	83.07	33.01	34.61	4.8%	33.43	280.70	61.30	58.38	1.545	0.048	3.6				5.8	70/75	45.00	33.55	59.65	bv
03/13/08	12:30	6842.52	7.68	6.03	7.57	51.16	53.77	51.95	579.7	85.07	82.97	32.94	34.75	5.5%	33.48	280.30	61.18	59.23	1.808	0.047	3.5				9.5	70/75	44.97	33.25	57.33	bv
03/18/08	11:11	6884.90	7.67	5.96	7.53	51.33	54.18	52.19	558.3	85.34	83.32	33.06	35.07	6.1%	33.66	270.20	61.45	59.61	1.733	0.043	2.9				5	70/75	44.99	34.28	62.45	bl
												12 Point flux and recovery Period																		
03/19/08	11:07	6907.13	7.59	5.95	7.51	51.54	53.95	52.04	693.1	82.72	80.73	33.21	34.93	5.2%	33.57	336.60	59.07	57.26	1.265	0.044	2.7				22.8	70/75	35.77	29.06	53.43	bl
03/20/08	10:22	6930.38	7.65	6.06	7.55	51.48	53.92	52.09	721.7	86.29	82.03	33.16	34.89	5.2%	33.61	350.90	62.32	58.43	1.829	0.043	2.8				20.4	70/75	35.77	26.16	55.32	bl
03/21/08	9:42	6952.07	7.71	6.05	7.53	51.39	53.99	52.22	811.1	92.18	83.02	33.10	34.95	5.6%	33.69	396.10	67.65	59.32	1.038	0.046	3.4				18	70/75	35.77	22.03	51.47	bl
03/25/08	10:18	6977.99	7.71	6.05	7.56	51.46	53.89	52.14	578.4	85.24	83.05	33.14	34.87	5.2%	33.63	280.20	61.36	59.36	0.796	0.046	3.6				15.6	70/75	44.82	33.84	58.11	bl
03/26/08	10:10	7000.10	7.77	6.19	7.59	51.37	53.87	52.01	627.9	88.83	86.01	33.09	34.85	5.3%	33.53	303.90	64.63	62.05	0.726	0.052	4.6				13.2	70/75	44.79	30.15	55.47	bl
04/08/08	9:52	7138.88	7.73	6.06	7.56	51.47	53.68	52.12	663.1	94.21	87.53	33.16	34.72	4.7%	33.62	321.90	69.48	63.41	3.566	0.043	4.9				19.4	70/75	45.26	26.57	58.62	bl
03/27/08	10:22	7024.29	7.78	6.16	7.58	51.53	53.98	52.21	649.4	93.64	88.14	33.20	34.94	5.2%	33.67	315.20	68.95	63.98	1.703	0.053	4.8				10.8	70/75	44.79	26.75	59.07	bl
04/01/08	13:40	7060.61	7.93	6.34	7.74	51.57	54.5	52.28	511.8	85.48	83.93	33.22	35.34	6.4%	33.78	247.40	61.70	60.23	0.673	0.050	7.2				6.8	70/75	54.02	40.66	64.66	bv, sdi 10 min
04/04/08	12:13	7115.72	7.86	6.33	7.67	51.47	53.55	52.03	530.4	90.11	86.88	33.15	34.62	4.4%	33.56	256.40	65.77	62.83	0.698	0.047	7.1				21.8	70/75	53.99	34.88	64.09	bl, SDI 10 min
04/09/08	10:19	7161.11	7.71	6.01	7.51	51.63	53.98	52.32	533.1	95.64	90.19	33.27	34.95	5.0%	33.76	257.70	70.81	65.83	2.206	0.043	4.6				17	70/75	53.85	30.56	61.91	bl
04/10/08	9:44	7182.91	7.71	5.96	7.49	51.54	53.92	52.19	581.4	101.7	93.19	33.19	34.89	5.1%	33.67	281.80	76.29	68.52	1.357	0.045	4.4				14.7	70/75	53.91	26.98	59.11	bl
04/11/08	9:55	7205.52	7.70	5.89	7.55	51.48	54.16	52.37	435.4	86.11	84.82	33.16	35.06	5.7%	33.77	209.30	62.19	60.97	0.874	0.047	4.6				12.2	70/75	60.00	43.68	66.00	bl
04/16/08	9:37	7235.45	7.78	6.04	7.62	51.71	54.35	52.37	463.3	89.76	87.59	33.32	35.23	5.7%	33.79	223.20	65.49	63.48	0.648	0.049	4.7				9.4	70/75	60.00	39.61	66.00	bl
04/17/08	8:18	7255.53	7.81	6.03	7.61	51.77	54.47	52.42	490.9	95.35	92.28	33.36	35.36	6.0%	33.83	237.00	70.53	67.71	0.644	0.055	4.6				6.5	70/75	60.00	34.54	64.45	bl
												Base Line Test										nd	nd	nd						
04/18/08	9:34	7278.52	7.79	6.29	7.66	51.72	53.92	52.41	585.7	85.22	82.98	33.32	34.91	4.8%	33.83	283.80	61.38	59.32	0.569	0.058	4.8				5.1	70/75	45.00	33.81	60.64	bl
												Most Affordable Point (MAP) Period																		
04/23/08	7:40	7296.05	7.74	5.92	7.59	51.82	54.67	52.59	511.5	91.45	89.01	33.39	35.55	6.5%	33.95	247.40	66.99	64.76	1.112	0.045	4				23.7	70/75	53.99	34.81	66.00	bl
04/24/08	8:13	7318.79	7.71	5.88	7.56	51.83	54.59	52.44	502.4	90.51	87.97	33.42	35.47	6.1%	33.86	242.90	66.15	63.82	0.665	0.048	4.3				21.5	70/75	54.02	35.57	64.48	bl
04/25/08	8:07	7340.85	7.69	5.92	7.54	51.77	54.17	52.34	499.7	90.87	88.11	33.36	35.11	5.2%	33.78	241.40	66.48	63.95	0.655	0.045	3.9				19.4	70/75	53.99	34.98	64.05	bl
04/29/08	10:07	7365.37	7.75	6.02	7.59	51.71	54.48	52.57	510.6	89.09	87.28	33.32	35.34	6.1%	33.92	246.70	64.87	63.21	0.765	0.049	4.9				16.8	70/75	53.99	36.82	66.00	bl
04/30/08	11:00	7388.37	7.74	6.01	7.55	51.88	54.05	52.51	501.8	90.03	87.12	33.44	35.01	4.7%	33.89	242.40	65.71	63.03	1.183	0.053	6.9				14.5	70/75	53.99	35.83	66.00	bl
05/01/08	12:41	7412.47	7.72	6.05	7.58	51.65	55.02	52.59	496	88.94	87.27	33.27	35.77	7.5%	33.93	239.40	64.69	63.17	0.868	0.055	6.9				12.1	70/75	53.96	37.53	66.00	bl
05/02/08	8:48	7431.05	7.74	6.03	7.58	51.69	53.81	52.24	509.2	89.96	87.02	33.31	34.82	4.5%	33.70	246.00	65.62	62.94	0.550	0.061	7.5				10.4	70/75	53.97	35.68	64.68	bl
Toray Membranes - TM800E-400 (Set 2)												**Membrane Ripening Period**																		
05/16/08	10:30	7475.85	7.89	6.05	7.75	51.39	53.88	52.08	265.3	85.61	83.54	33.07	34.84	5.4%	33.58	126.30	61.71	59.81	nd	0.025	3.6				nd	nd	45.09	34.28	57.83	bl - This SDI is with Zenon running thru me
05/20/08	9:16	7555.25	7.78	5.92	7.63	51.55	54.22	52.13	256.5	85.42	83.59	33.21	35.13	5.8%	33.63	122.10	61.62	59.85	0.837	0.033	3.7				nd	nd	45.15	34.83	58.91	bl
05/21/08	9:02	7579.01	7.73	5.75	7.61	51.52	53.82	52.09	241.2	86.17	83.89	33.18	34.83	5.0%	33.59	114.50	62.19	60.13	1.445	0.032	3.5				nd	nd	45.13	34.28	59.38	bl
05/22/08	9:09	7603.13	7.75	5.72	7.59	51.61	53.71	52.16	244.7	86.17	83.69	33.24	34.75	4.5%	33.64	116.30	62.21	59.93	3.365	0.032	3.5				nd	nd	45.15	33.96	59.94	bl
05/23/08	10:04	7622.64	7.66	5.63	7.53	51.49	54.18	52.26	234.1	86.04	84.07	33.15	35.08	5.8%	33.72	111.00	62.08	60.28	1.421	0.051	4.4				7.9	70/75	45.13	34.51	63.38	bl
05/28/08	9:26	7645.06	7.84	5.61	7.68	51.44	53.88	52.01	259.5	85.32	83.28	33.13	34.87	5.3%	33.54	123.60	61.47	59.57	0.493	0.078	4.7				5.8	70/75	45.15	34.54	62.09	bl
05/29/08	9:31	7667.17	7.78	5.69	7.62	51.37	53.89	52.08	244.9	85.54	83.61	33.06	34.86	5.4%	33.59	116.40	61.56	59.85	0.502	0.051	4.1				21.8	70/75	45.12	34.63	65.85	bl

Water Quality Data

TIME			pH			CONDUCTIVITY						TDS							TURBIDITY		SDI	BORON			OTHER					
				pH				Conductivity (mS/cm)							TDS (mg/L)				Turbidity (NTU)		Density Index		Boron (mg/L)			Inhibitor Pump				
Date MM/DD/YY	Time hh:mm	Operation Time hh.hh	$pH_{F\text{-}sys}$ SC5	$pH_{P\text{-}sys}$ SC11	$pH_{C\text{-}sys}$ SC6	$C_{CF\text{-}out}$ SC3	$C_{F\text{-}PX\text{-}out}$ SC4	$C_{F\text{-}sys}$ SC5	$C_{P\text{-}sys}$ SC11	$C_{C\text{-}sys}$ SC6	$C_{C\text{-}PX\text{-}out}$ SC7	$TDS_{CF\text{-}out}$ SC3	$TDS_{F\text{-}PX\text{-}out}$ SC4	PX % Inc	$TDS_{F\text{-}sys}$ SC5	$TDS_{P\text{-}sys}$ SC11	$TDS_{C\text{-}sys}$ SC6	$TDS_{C\text{-}PX\text{-}out}$ SC7	$NTU_{MF\text{-}in}$ CART	$NTU_{CF\text{-}out}$ meter	$SDI_{CF\text{-}out}$ CART	$B_{CF\text{-}out}$ SC3	$B_{F\text{-}sys}$ SC5	$B_{P\text{-}sys}$ SC11	V_{TANK} (gallons)	Pump Speed (gph)	HP VFD Speed (Hertz)	PX VFD Speed (Hertz)	FEED VFD Speed (Hertz)	Notes
05/30/08	10:03	7689.77	7.76	5.75	7.63	51.47	53.94	52.21	249.1	85.67	83.61	33.13	34.91	5.4%	33.68	118.50	61.73	59.87	0.566	0.058	4.2		4.8	0.56	19.1	70/75	45.15	34.51	62.31	bl
												12 Point flux and recovery Period																		
06/03/08	10:58	7716.35	7.64	5.63	7.54	51.41	55.32	52.47	305	86.59	84.08	33.05	36.01	9.0%	33.86	145.60	62.59	60.32	0.449	0.044	3.9				16.6	70/75	36.50	28.39	54.92	bl
06/04/08	9:16	7738.66	7.68	5.58	7.55	51.63	54.53	52.37	310.4	90.21	83.36	33.26	35.36	6.3%	33.79	148.40	65.84	59.64	0.868	0.046	4.1		4.7	0.66	14.5	70/75	36.53	25.66	57.69	bl
06/05/08	9:20	7760.77	7.69	5.63	7.53	51.49	54.86	52.34	335.1	93.16	85.64	33.17	35.66	7.5%	33.78	160.40	68.49	61.69	1.154	0.046	4.2				12.4	70/75	36.18	23.67	54.59	bl
06/06/08	9:17	7784.73	7.71	5.66	7.61	51.59	53.96	52.23	239.4	86.04	84.04	33.23	35.08	5.6%	33.68	113.60	62.07	60.24	0.826	0.048	4.7		5.0	0.55	10.4	70/75	45.06	34.39	63.02	bl
06/10/08	9:30	7809.31	7.96	6.02	7.78	51.61	54.41	52.28	323.1	89.62	87.02	33.27	35.31	6.1%	33.76	154.60	65.32	62.94	0.624	0.064	4.8		4.9	0.69	8.1	70/75	45.03	30.50	59.11	bl
06/11/08	10:37	7832.48	7.93	5.94	7.73	51.41	53.77	52.02	329.9	93.95	88.86	33.11	34.78	5.0%	33.56	157.80	69.21	64.58	0.891	0.060	4.6		4.8	0.71	6	70/75	45.03	27.25	58.33	bl
06/12/08	10:10	7856.03	7.94	5.82	7.83	51.39	55.57	52.51	239.2	86.78	85.84	33.09	36.24	9.5%	33.88	113.60	62.79	61.91	0.815	0.048	4.6		4.8	0.56	24	70/75	54.23	40.66	66.00	bl
06/24/08	9:15	8000.16	7.79	5.73	7.64	51.31	53.95	52.05	234.2	85.39	83.71	33.04	34.91	5.7%	33.58	111.10	61.51	59.94	0.858	0.072	4.6				10.3	70/75	54.11	40.78	65.81	bl
06/13/08	10:09	7878.48	8.06	6.05	7.87	51.65	54.21	52.31	262	90.74	88.57	33.29	35.21	5.8%	33.76	124.70	60.39	64.34	0.918	0.055	4.6		4.8	0.58	21.7	70/75	54.29	35.36	66.00	bl
06/17/08	13:25	7908.16	7.83	5.80	7.60	50.35	54	51.2	266.8	93.44	90.64	32.42	34.95	7.8%	32.97	127.10	68.76	66.27	0.588	0.043	2		4.8	0.61	19	70/75	54.29	31.58	65.20	bv
06/18/08	15:15	7932.03	7.75	4.96	7.60	50.25	53.82	51.02	203.5	83.38	82.62	32.14	34.79	8.2%	32.86	95.97	59.51	58.74	0.714	0.043	4.1		4.6	0.49	17	70/75	60.00	45.08	66.00	bv
06/19/08	17:50	7956.59	7.85	5.21	7.66	50.08	52.62	50.7	230.6	86.62	84.78	32.16	33.95	5.6%	32.62	110.00	62.56	61.03	0.700	0.049	4.2		4.7	0.55	14.5	70/75	60.00	39.64	66.00	bv
06/20/08	12:40	7975.25	7.97	6.77	7.71	50.01	52.85	50.72	257.3	92.05	88.76	32.11	34.10	6.2%	32.65	121.90	67.56	64.56	0.750	0.062	4.9		4.6	0.59	12.5	70/75	60.00	34.10	66.00	bv
06/25/08	10:13	8023.37	7.92	6.01	7.75	51.24	53.67	51.89	281.4	85.23	83.18	32.99	34.69	5.2%	33.46	134.10	61.35	59.48	0.501	0.095	4.7				8.1	70/75	45.18	34.48	61.39	bl
												Most Affordable Point (MAP) Period																		
06/27/08	9:25	8053.71	7.87	5.86	7.67	51.26	53.76	51.92	254.7	89.19	87.12	32.99	34.78	5.4%	33.49	121.10	64.96	63.03	0.509	0.031	2.7				nd	nd	54.20	36.14	62.54	bl

Quarterly Technical Progress Report
Covering Period June 1, 2008 to September 30, 2008
Date of Report 12-12-08

Agreement Number:	4600007440
DWR ID Number:	n/a Department of Water Resources Office of Water Use Efficiency 901 P Street, Third Floor Sacramento, CA 95814
Project Title:	Optimizing Seawater Reverse Osmosis for Affordable Desalination
Recipient Organization:	Affordable Desalination Collaboration 2419 E. Harbor Blvd, #173 Ventura, CA 93001
Partners:	See attached membership list.
Contact Person:	John MacHarg 2419 E. Harbor Blvd, #173 Ventura, CA 93001 Tel: 650-283-7976 Fax: 805-658-8060 e-mail: jmacharg@affordabledesal.com
Date Submitted:	12-12-08

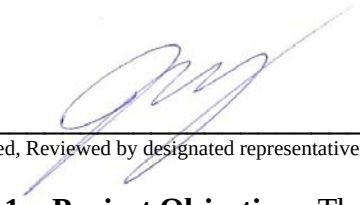

Signed, Reviewed by designated representative

1. **Project Objective:** The objectives of the Affordable Desalination Collaboration (ADC) are to demonstrate affordable, reliable and environmentally responsible reverse osmosis desalination technologies and to provide a platform by which cutting edge technologies can be tested and measured for their ability to reduce the overall cost of the seawater reverse osmosis (SWRO) treatment process.

2. **Project Description / Background:** A key challenge facing the seawater desalination industry today is to develop a new generation of reverse osmosis (RO) plants that deliver high-quality, fresh water at a reduced economic and environmental cost. The key to achieving these goals is to address the most expensive and environmentally taxing component of operating a desalination system: energy.

The ADC was formed in 2004 to fund and execute the first part of a multiple phase Affordable Desalination Demonstration Project. The ADC members are a group of leading government agencies, municipalities, RO manufacturers, consultants and professionals partnering together to help reduce the costs associated with desalination.

The first phase of the project, ADC I, built and operated a demonstration plant at the United States Navy's Seawater Desalination Test Facility in Pt. Hueneme, California. The plant utilized a combination of proven technologies developed primarily in the U.S. and California to demonstrate that seawater desalination can be optimized to make it technically and economically viable. ADC I achieved remarkable results by desalinating seawater at energy levels between 6.0-6.9 kWh/kgal (1960-2250 kWh/acre-ft). On average, these numbers make the power for desalination comparable to the power required for the State Water and the Colorado River Aqueduct projects and they are approximately 35% lower than experts had been projecting for seawater desalination. For the approximate 100 mgd of proposed seawater desalination projects in Southern California alone, this 35% savings equates to approximately 140,000 Mega Watt hours in energy savings per year.

This second phase (ADC II) will pursue the following demonstration, and development programs.

a. Test and demonstrate additional manufacturers' membranes through a protocol similar to Phase I.
b. Test and demonstrate DOW FILMTEC's next generation "hybrid-membrane".
c. Develop and demonstrate new process designs that are possible as a result of the isobaric energy recovery technologies. We will use the ADC pilot system to test and demonstrate these new flow schemes in order to push the recoveries above 50%, while still maintaining good water quality and low energy performance.
d. Test and demonstrate ZENON ultra-filtration technology ahead of our ADC pilot system. This portion of the test should build on and compliment the other pre-filtration studies that are taking place in the region.
e. Test and demonstrate Ocean Pacific Technology's (OPT) Axial Piston Pressure Exchanger (AP^2X) pump technology.

Thus far we have completed the four sets of manufacturers' membrane testing including Toray TM800C membrane test and retest (Task 2 and 6), Koch 2822HF-400 membrane test (Task 3), Hydranautics SWC5 membrane (Task 4) and DOW-FIMTEC Hybrid (Task 5). In addition we have also completed the installation and start up of the ZENON pre-filtration skid. We were shut down from July 9th through September 24th of Q3-08 according to the Naval Facilities Engineering Service Center request due to their intake capacity being taken up by

their higher priority Navy testing. In September we installed the DOW-FILMTEC SW30XHR-400i high boron rejection membranes (task 7) and re-started on September 24th.

- Start Date of Contract: April 2, 2007
- End Date of Contract: Feburary 4, 2010

3. Progress and Status:

At the Navy's request, we were mostly offline during the third quarter of 2008. We were able to get back on line on September 24th and initiated task 7.

A table comparing the most affordable points of all the membranes tested thus far including 3 sets of FILMTEC (tested in ADC I), Toray, Koch, FILMTEC ISD-Hybid and Hydranautic's is provided below.

Most Affordable Point Performance and Data

Mfgr	Rec %	Flux gfd	RO Process kWh/m3 (kWh/kgal)	TDS mg/l	Boron mg/l	Total Treatment Costs $/acre-ft (3)	Temp ºF	Feed ktds
FILMTEC (1) SW30HR-380	50	7.5	7.75	129	0.65	978	63	34.69
FILMTEC (1) SW30XLE-400i	49	9.0	6.92	231	1.12	922	57	34.69
FILMTEC (1) SW30HRLE-400i	49	7.5	7.54	148	0.85	968	54	35.29
Koch TFC 2822HF-400	50	8.9	7.32	307	1.4	934	63	34.91
Hydranautics SWC5	49	10.0	7.78	84	0.64	945	56	36.16
FILMTEC ISD-Hybrid	51	9.0	7.56	258	1.0	948	54	36.62
Toray TM800E-400	51	7.5	7.40	158	0.71	958	62	36.41

Notes: 1. Data from ADC I test where FILMTEC membranes were used exclusively. 2. The testing was performed consecutively through varying water quality conditions and should not be considered as side by side testing. The following results provide an approximate bench mark for SWRO energy consumption for Southern California and reveal general trends in membrane performance.

4. Percent Complete of Total Project: ~ 46 %

5. Deliverables:

Trade Show/Conference/Publication	Date(s)	Author(s)	Presenter	DWR Submittal
ADC Base Lines SWRO System Performance, Water and Desalination Report	September 2008	John MacHarg, Tom Seacord, Bradley Sessions	n/a	Q3-08
ADC Completes Profile of SWRO Press Release	March 28, 2008	ADC	n/a	Q1-08
AWWA Membrane Technology Conference, Tampa Florida, Collier County results	March 18-21, 2007	Brandon Yallaly, P.E., Tom Seacord, P.E., Steve Messner	Brandon Yallaly	Q2-07
AMTA 2007 Annual Conference, Las Vegas, ADC I 10 mgd Application	July 23-27, 2007	Bradley Sessions, Tom Seacord, P.E.	Tom Seacord	Q2-07
Desalination and Water Reuse (DWR) Quarterly, Innovative Designs to be Tested in ADC II	Aug/Sept-07	John P. MacHarg	n/a	Q3-07
IDA World Conference, Gran Canaria, ADC II Update	October 21-26, 2007	Stephen Dundorf, Thomas F. Seacord, John MacHarg	Stephen Dundorf	Q3-07

The ADC also held a joint workshop with the American Membrane Technology Association (AMTA) at the joint AMTA-SEDA Conference, July 14, 2008 in Naples, Florida. The primary purpose of this workshop was to present the results from our membrane testing (ADC I plus Tasks 2-6). The workshop was very successful and attracted approximately 100 attendees from various organizations including manufacturers, water agencies and municipalities. As shown in the table above an article was published in the Desalination and Water Reuse Quarterly magazine covering the same material.

6. Expenditures:

Expenditure Table

	Budgetary Category	Balances June 30, 2008			Q 3 Expenditures			Balances September 30, 2008		
		Non State Share	State Share (Grant)	Total Project Costs	Non State Share	State Share (Grant)	Total Project Costs	Non State Share	State Share (Grant)	Total Project Costs
	(I)	(II)	(III)	(IV) = (II+III)	(II)	(III)	(IV) = (II+III)	(II)	(III)	(IV) = (II+III)
(a)	Administration									
	Salaries, wages	$ -	$ 67,113	$ 67,113		$ 34,500	$ 34,500	$ -	$ 32,613	$ 32,613
	Fringe benefits	$ -	$ 4,043	$ 4,043		$ 14,928	$ 14,928	$ -	$ (10,885)	$ (10,885)
	Supplies	$ -	$ 38,965	$ 38,965		$ 2,139	$ 2,139	$ -	$ 36,826	$ 36,826
	Equipment	$ -	$ 6,000	$ 6,000			$ -	$ -	$ 6,000	$ 6,000
	Consulting services	$ 22,500	$ 47,000	$ 69,500	$ 47,500		$ 47,500	$ (25,000)	$ 47,000	$ 22,000
	Travel	$ -	$ 12,026	$ 12,026	$ 3,027		$ 3,027	$ (3,027)	$ 12,026	$ 8,999
(b)	Planning/design/engineering	$ (10,500)	$ 14,404	$ 3,904	$ -		$ -	$ (10,500)	$ 14,404	$ 3,904
(c)	Equipment purchases/Rentals/Rebates/Vouchers	$ 4,250	$ 19,000	$ 23,250			$ -	$ 4,250	$ 12,763	$ 17,013
(d)	Materials/Installation/Implementation	$ 69,000	$ 11,903	$ 80,903		$ 6,237	$ 6,237	$ 69,000	$ 11,903	$ 80,903
(e)	Implementation verification	$ 7,500	$ 8,000	$ 15,500			$ -	$ 7,500	$ 8,000	$ 15,500
(f)	Project legal/License/Insurance fees	$ -	$ 45,000	$ 45,000			$ -	$ -	$ 45,000	$ 45,000
(g)	Structures	$ -	$ -	$ -			$ -	$ -	$ -	$ -
(h)	Land Purchase/Easement	$ -	$ -	$ -			$ -	$ -	$ -	$ -
(i)	Environmental Compliance/Mitigation/Enhancement	$ -	$ -	$ -			$ -	$ -	$ -	$ -
(j)	Construction	$ -	$ -	$ -			$ -	$ -	$ -	$ -
(k)	Other (Operating Cash)	$ 335,000	$ -	$ 335,000			$ -	$335,000	$ -	$ 335,000
(l)	Operation, monitoring and assessment	$ -	$119,203	$ 119,203		$ 30,452	$ 30,452	$ -	$ 88,751	$ 88,751
(m)	Report preparation	$ 2,000	$ 2,500	$ 4,500			$ -	$ 2,000	$ 2,500	$ 4,500
(n)	Outreach and information sharing	$ 59,062	$ -	$ 59,062	$ 26,874		$ 26,874	$ 32,188	$ -	$ 32,188
(o)	Subtotal	$ 488,812	$395,156	$ 883,968	$ 77,401	$ 88,255	$165,656	$411,411	$306,901	$ 718,312
(p)	Overhead (8%)	$ -	$127,908	$ 127,908		$ 7,060	$ 7,060		$120,848	$ 120,848
(q)	Contingency (10%)	$ -	$ 30,379	$ 30,379		$ -			$ 30,379	$ 30,379
(r)	Total (o+p+q)	$ 488,812	$553,444	$1,042,255	$ 77,401	$ 95,316	$172,716	$411,411	$458,128	$ 869,539

7. **Schedule Status:** Including the NFESC mandated shutdown, we have been operating on schedule through Q3-2008.

8. **Plans for Next Quarter:** The ADC will test the DOW-FILMTEC SW30XHR-400i high boron rejection membranes (task 7). In addition, we plan to start the PX Unbalanced High Recovery testing (task 8). We have pushed this test ahead of the koch membrane test in order to meet deadline requirements for a paper we will be presenting at the International Desalination Association (IDA) World Conference in Dubai in November-2009. We want to ensure that we complete the unbalance test and paper well in advance of the draft and final manuscript deadlines.

9. **Attachments:** n/a

All quarterly reports should be publicly disclosable and not contain confidential, proprietary or business sensitive information.

Task and % Complete Progress Table

Agreement Number	Starting Date:	Completion Date:	Quarter-Year	Report Number	PERCENT OF
4600007440	4.2.07	2.4.10	Q3-2008	6	
Grantee Agency Name: Affordable Desalination Collaboration		% Time Elapsed 53%	Total Grant Funds used $ 541,872	Grant funds this Quarter $ 95,316	
Name of Project: Optimizing Seawater Reverse Osmosis for Affordable Desalination					

TASKS	YEAR	2007		2008				Project	Task Complete Last Report	Task Complete This Report	Project Complete
	MONTH	Qtr 3	Qtr 4	Qtr 1	Qtr 2	Qtr 3	Qtr 4				
Task 1: Zenon 1000 pilot demonstration								12	5	10	2
Task 2: Toray low energy membrane demonstration			Complete					8	0	0	8
Task 3: Koch low energy membrane demonstration				Complete				12	0	0	12
Task 4: Hydranautics low energy membrane demonstration					Complete			8	0	0	8
Task 5: Dow-FILMTEC hybrid membrane demonstration						Complete		8	40	60	8
Task 6: TorayTM800C low energy membrane demonstration (re-test)						Complete		8	0	100	8
Task 7: DOW FILMTEC high Boron rejection memb. demonstration								8	0	0	0
Task 8: Unbalanced PX high recovery testing								10	0	0	0
Task 9: Koch high rejection memb. demonstration								8	0	0	0
Task 10: Interstage-PX hybrid high recovery testing								10	0	0	0
Task 11: Demonstrate OPT's APX pump and energy recovery system								8	0	0	0
Show Progress by Use of Bar Chart	**Scheduled =**							100%			46%
	Completed =										

Notse: 1. Since we have been operating significantly under budget, we have proposed (2/10/08) and received preliminary approval to add tasks 6, 7, 9, and 11 to the task list. These additional items will extend the project schedule from the current December 2008 end date through Feb- 2010. The additional tasks and subsequent extension to the schedule will not result in an increase to the State Share/grant ie. no cost extension.

2. We moved the Unbalanced PX High Recovery Testing up to task 8 from previously being task 9. This was done to complete the test in time for other dead lines associated with a paper on the test being presented at the IDA World Congress in Dubai in November-2009. This shuffle in schedule will not affect the final completion date or the budget of the test.

Schedule

Proposed/Draft Project Schedule

ID	Task Name	Duration	Start	Finish
1	Agreement development	168 days	Tue 8/1/06	Thu 3/22/07
2	Final agreement signed	5 days	Fri 3/23/07	Thu 3/29/07
3	Project begins	1 day	Mon 4/2/07	Mon 4/2/07
4	**TorayTM800C low energy membrane demonstration**	**51 days**	**Mon 4/30/07**	**Mon 7/9/07**
5	Install Toray TM800C Membranes	2 days	Mon 4/30/07	Tue 5/1/07
6	TM800C Ripening period	15 days	Wed 5/2/07	Tue 5/22/07
7	TM800C 9 flux and recovery points	18 days	Wed 5/23/07	Fri 6/15/07
8	TM800C Most affordable point	15 days	Mon 6/18/07	Fri 7/6/07
9	Complete Toray TM800C testing	1 day	Mon 7/9/07	Mon 7/9/07
10	Submit project update report to DWR	5 days	Mon 7/9/07	Fri 7/13/07
11	**Koch low energy membrane demonstration**	**88 days**	**Tue 7/10/07**	**Thu 11/8/07**
12	Install membranes	2 days	Tue 7/10/07	Wed 7/11/07
13	Ripening period	20 days	Thu 7/12/07	Wed 8/8/07
14	9 flux and recovery points	30 days	Thu 8/9/07	Wed 9/19/07
15	Most affordable point	35 days	Thu 9/20/07	Wed 11/7/07
16	Complete Koch testing	1 day	Thu 11/8/07	Thu 11/8/07
17	Submit project update report to DWR	5 days	Mon 9/17/07	Fri 9/21/07
18	Innovative PX flow schemes work shop	2 days	Thu 11/8/07	Fri 11/9/07
19	**Hydranautics low energy membrane demonstration**	**78 days**	**Fri 11/9/07**	**Tue 2/26/08**
20	Install membranes	2 days	Fri 11/9/07	Mon 11/12/07
21	Ripening period	20 days	Tue 11/13/07	Mon 12/10/07
22	9 flux and recovery points	25 days	Tue 12/11/07	Mon 1/14/08
23	Most affordable point	30 days	Tue 1/15/08	Mon 2/25/08
24	Complete Hydranautics testing	1 day	Tue 2/26/08	Tue 2/26/08
25	Submit project update report to DWR	4 days	Mon 1/21/08	Thu 1/24/08
26	**Zenon 1000 Pilot Demonstration**	**281 days**	**Mon 3/3/08**	**Mon 3/30/09**
27	Install and test Zenon System	18 days	Mon 3/3/08	Wed 3/26/08
28	Operate and monitor Zenon 1000 membrane pilot system	262 days	Thu 3/27/08	Fri 3/27/09
29	Complete Zenon testing	1 day	Mon 3/30/09	Mon 3/30/09
30	Submit project update report to DWR	4 days	Mon 3/17/08	Thu 3/20/08
31	**DOW Hybrid Membrane Demonstration**	**49 days**	**Wed 2/27/08**	**Mon 5/5/08**
32	Install DOW hybrid membranes	2 days	Wed 2/27/08	Thu 2/28/08
33	DOW Hybrid Ripening period	15 days	Wed 2/27/08	Tue 3/18/08
34	DOW Hybrid 9 flux and recovery points	18 days	Wed 3/19/08	Fri 4/11/08
35	DOW Hybrid Most affordable point	15 days	Mon 4/14/08	Fri 5/2/08
36	Complete DOW testing	1 day	Mon 5/5/08	Mon 5/5/08
37	Submit project update report to DWR	4 days	Mon 6/16/08	Thu 6/19/08
38	***ToryTM800C low energy membrane demonstration (re-test)***	***51 days***	***Tue 5/6/08***	***Tue 7/15/08***
39	***Install Toray TM800C Membranes***	***2 days***	***Tue 5/6/08***	***Wed 5/7/08***
40	***TM800C Ripening period***	***15 days***	***Thu 5/8/08***	***Wed 5/28/08***
41	***TM800C 12 flux and recovery points***	***18 days***	***Thu 5/29/08***	***Mon 6/23/08***
42	***TM800C Most affordable point***	***15 days***	***Tue 6/24/08***	***Mon 7/14/08***
43	***Complete Toray TM800C testing***	***1 day***	***Tue 7/15/08***	***Tue 7/15/08***

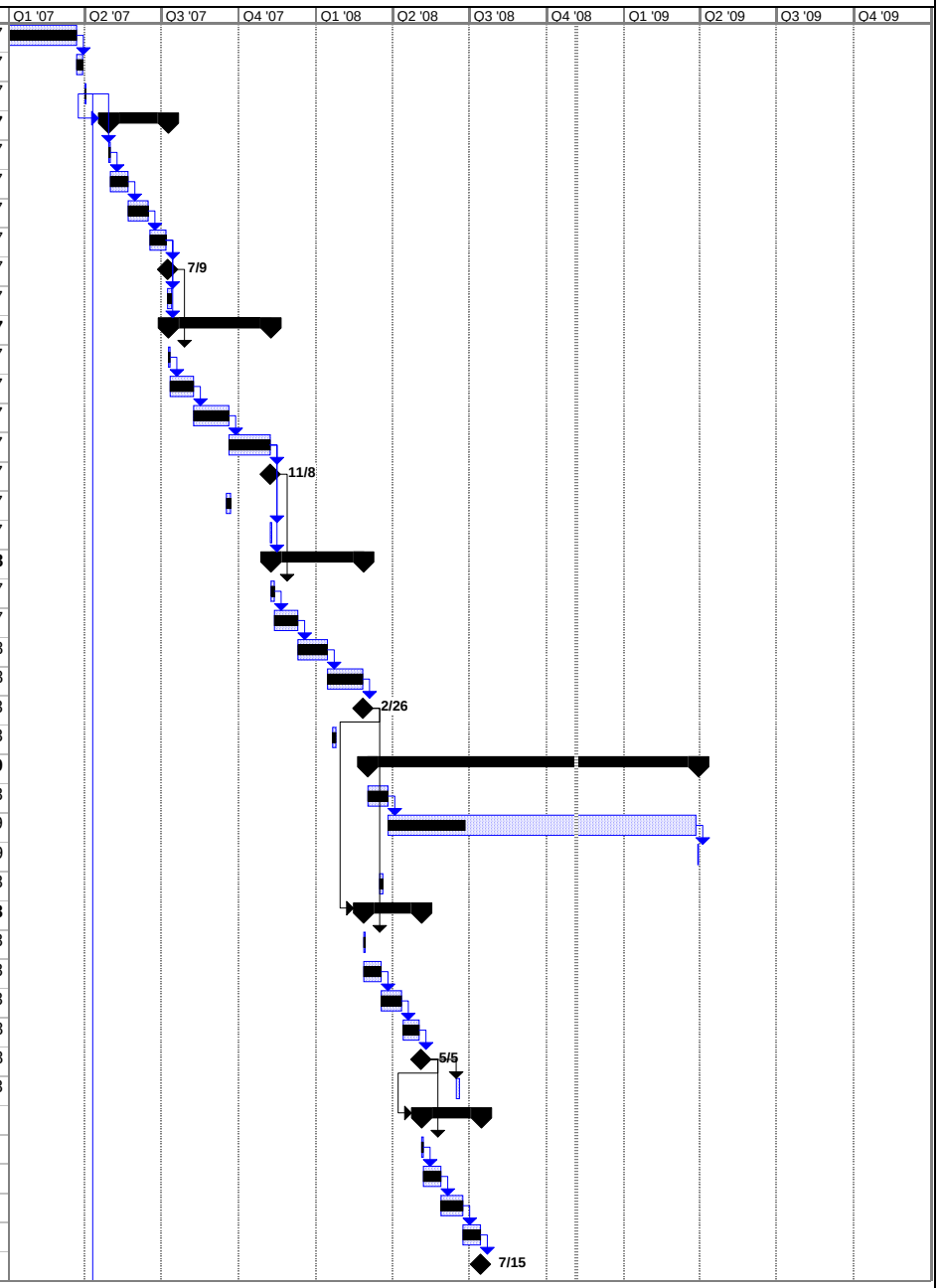

Project: ADC Proposed Project Schedu
Date: Tue 11/4/08

Task		Summary		Rolled Up Progress		Project Summary	
Progress		Rolled Up Task		Split		Group By Summary	
Milestone		Rolled Up Milestone		External Tasks		Deadline	

Proposed/Draft Project Schedule

ID	Task Name	Duration	Start	Finish
44	NFESC shutdown due to intake capacity issues	57 days?	Mon 7/14/08	Tue 9/30/08
45	***DOW FILMTEC high Boron rejection memb. demonstration***	***51 days***	***Wed 10/1/08***	***Wed 12/10/08***
46	***Install DOW FILMTEC SW30XHR-400i Membranes***	***2 days***	***Wed 10/1/08***	***Thu 10/2/08***
47	***DOW FILMTEC SW30XHR-400 Ripening period***	***15 days***	***Fri 10/3/08***	***Thu 10/23/08***
48	***DOW FILMTEC SW30XHR-400 12 flux and recovery points***	***18 days***	***Fri 10/24/08***	***Tue 11/18/08***
49	***DOW FILMTEC SW30XHR-400 Most affordable point***	***15 days***	***Wed 11/19/08***	***Tue 12/9/08***
50	***Complete FILMTEC SW30XHR-400 testing***	***1 day***	***Wed 12/10/08***	***Wed 12/10/08***
51	Submit project update report to DWR	4 days	Fri 8/15/08	Wed 8/20/08
52	ADC-AMTA Member workshop and progress report	1 day	Mon 7/14/08	Mon 7/14/08
53	**Unbalanced PX high recovery testing**	**76 days**	**Thu 12/11/08**	**Thu 3/26/09**
54	Install PX flow scheme membrane set	2 days	Thu 12/11/08	Fri 12/12/08
55	Flush and base line membranes	10 days	Mon 12/15/08	Fri 12/26/08
56	Execute unbalance test protocol @ 9 points	18 days	Mon 12/29/08	Wed 1/21/09
57	PX unbalanced most affordable point (24/7 for 2 months)	45 days	Thu 1/22/09	Wed 3/25/09
58	Clean membranes	2 days	Thu 2/19/09	Fri 2/20/09
59	Complete Unbalanced PX testing	1 day	Thu 3/26/09	Thu 3/26/09
60	Order long lead interstage-PX hybrid items	45 days	Fri 3/27/09	Thu 5/28/09
61	Submit project update report to DWR	4 days	Thu 1/15/09	Tue 1/20/09
62	Submit project update report to DWR	4 days	Mon 3/16/09	Thu 3/19/09
63	***Koch high rejection memb. Demonstration***	***51 days***	***Fri 3/27/09***	***Fri 6/5/09***
64	***Install Koch Membranes***	***2 days***	***Fri 3/27/09***	***Mon 3/30/09***
65	***Koch Ripening period***	***15 days***	***Tue 3/31/09***	***Mon 4/20/09***
66	***Koch 12 flux and recovery points***	***18 days***	***Tue 4/21/09***	***Thu 5/14/09***
67	***Koch Most affordable point***	***15 days***	***Fri 5/15/09***	***Thu 6/4/09***
68	***Complete Koch testing***	***1 day***	***Fri 6/5/09***	***Fri 6/5/09***
69	**Interstage-PX hybrid high recovery testing**	**86 days?**	**Mon 6/8/09**	**Mon 10/5/09**
70	Reconfigure system for Interstage-PX hybrid design	10 days	Mon 6/8/09	Fri 6/19/09
71	Execute interstage-PX hybrid protocol 18 points	30 days	Mon 6/22/09	Fri 7/31/09
72	Interstage-PX hybrid most affordable point (24/7 for 2 months)	45 days	Mon 8/3/09	Fri 10/2/09
73	Clean membranes	2 days	Mon 8/31/09	Tue 9/1/09
74	Complete Interstage-PX Hybrid testing	1 day?	Mon 10/5/09	Mon 10/5/09
75	Submit project update report to DWR	4 days	Mon 6/15/09	Thu 6/18/09
76	***Demonstrate OPT's X-pump and energy recovery system***	***55 days***	***Tue 10/6/09***	***Mon 12/21/09***
77	***Reconfigure system with X-pump and ER unit***	***10 days***	***Tue 10/6/09***	***Mon 10/19/09***
78	***Operate system through 40 hour "break-in" period***	***5 days***	***Tue 10/20/09***	***Mon 10/26/09***
79	***Demonstrate X-pump technology 24/5 for cumulative 500 hrs***	***25 days***	***Tue 10/27/09***	***Mon 11/30/09***
80	***Complete X-pump demonstration***	***15 days***	***Tue 12/1/09***	***Mon 12/21/09***
81	Submit project update report to DWR	4 days	Mon 8/17/09	Thu 8/20/09
82	Complete ADC Prop 50 testing	1 day	Tue 12/22/09	Tue 12/22/09
83	Write final report	30 days	Tue 12/22/09	Mon 2/1/10
84	Submit final report, billing, conclude project	2 days	Tue 2/2/10	Wed 2/3/10
85	Member/general workshop and publish results	2 days	Thu 2/4/10	Fri 2/5/10
86	Project Duration	743 days	Tue 4/3/07	Thu 2/4/10

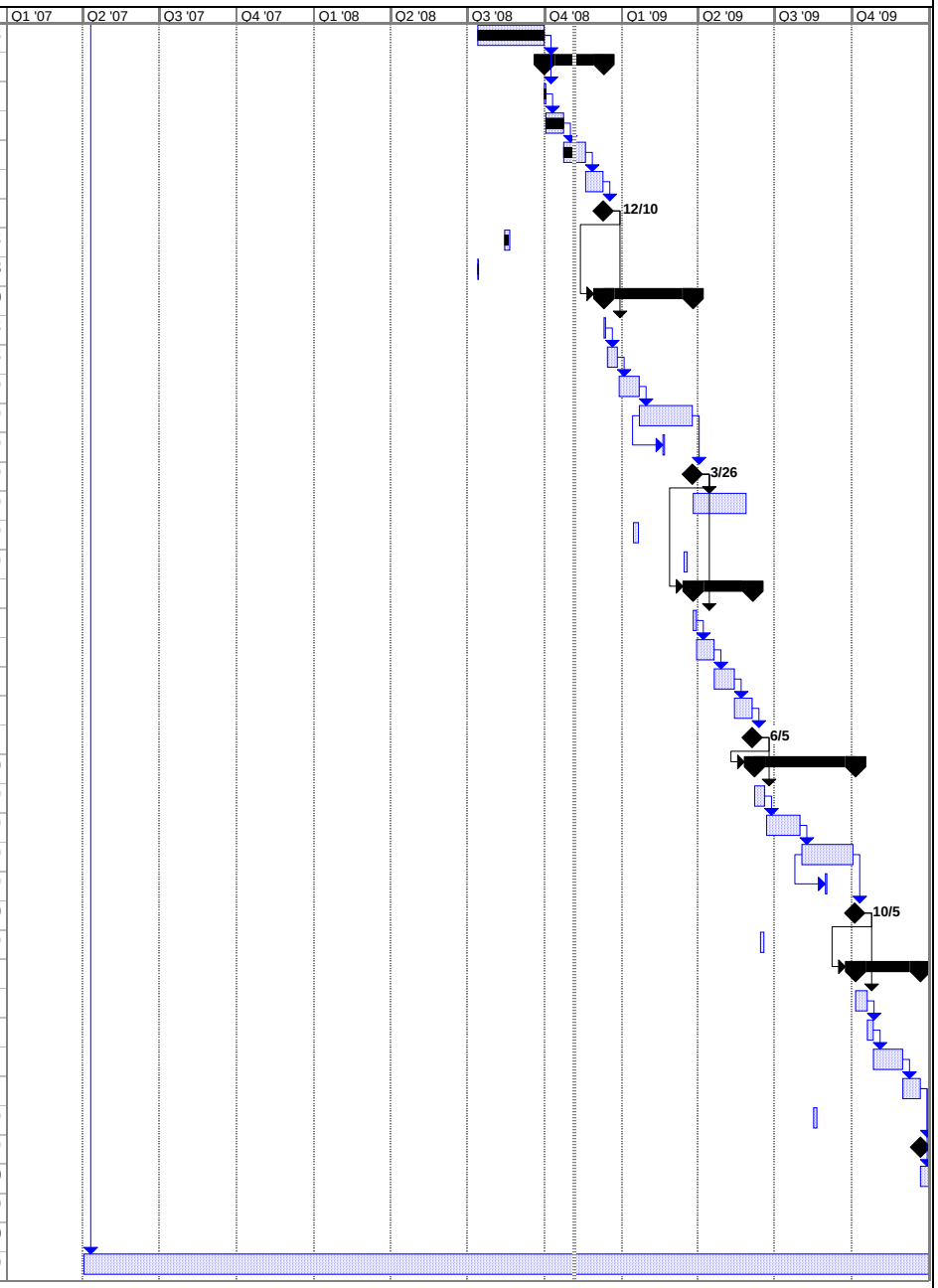

Project: ADC Proposed Project Schedu
Date: Tue 11/4/08

Task		Summary		Rolled Up Progress		Project Summary	
Progress		Rolled Up Task		Split		Group By Summary	
Milestone		Rolled Up Milestone		External Tasks		Deadline	

Attachments

1. Water Quality, Flow and Pressure and Power Data
2. ADC-AMTA Joint Workshop Program and attendance lists.
3. ADC Base Lines SWRO System Performance, D&WR article.

Water Quality Data

TIME			pH			CONDUCTIVITY						TDS							TURBIDITY		SDI	BORON			OTHER					
		Operation		pH				Conductivity (mS/cm)						TDS (mg/L)					Turbidity (NTU)		Density Index		Boron (mg/L)			Inhibitor Pump	HP VFD	PX VFD	FEED VFD	
Date MM/DD/YY	Time hh:mm	Operation Time hh.hh	$pH_{F\text{-}sys}$ SC5	$pH_{P\text{-}sys}$ SC11	$pH_{C\text{-}sys}$ SC6	$C_{CF\text{-}out}$ SC3	$C_{F\text{-}PX\text{-}out}$ SC4	$C_{F\text{-}sys}$ SC5	$C_{P\text{-}sys}$ SC11	$C_{C\text{-}sys}$ SC6	$C_{C\text{-}PX\text{-}out}$ SC7	$TDS_{CF\text{-}out}$ SC3	$TDS_{F\text{-}PX\text{-}out}$ SC4	PX % Inc	$TDS_{F\text{-}sys}$ SC5	$TDS_{P\text{-}sys}$ SC11	$TDS_{C\text{-}sys}$ SC6	$TDS_{C\text{-}PX\text{-}out}$ SC7	$NTU_{MF\text{-}in}$ CART	$NTU_{CF\text{-}out}$ meter	$SDI_{CF\text{-}out}$ CART	$B_{CF\text{-}out}$ SC3	$B_{F\text{-}sys}$ SC5	$B_{P\text{-}sys}$ SC11	V_{TANK} (gallons)	Speed (gph)	Speed (Hertz)	Speed (Hertz)	Speed (Hertz)	Notes
Toray Membranes - TM800E-400												**Membrane Ripening Period**																		
05/30/07	11:25	4151.46	7.90	4.40	7.61	50.70	52.35	51.62	322.30	84.62	81.53	32.56	33.77	3.7%	33.23	154.20	60.80	57.95	nd	0.040	4.0	nd	nd	nd	7.0	60/75	44.85	33.08	61.20	
06/05/07	12:05	4199.43	7.88	6.77	7.73	49.81	53.23	51.63	353.50	84.01	82.22	31.88	34.41	7.9%	33.27	169.50	60.30	58.57	nd	0.057	4.0	nd	nd	nd	11.0	70/75	33.28	44.94	61.20	
06/06/07	10:56	4219.43	7.91	7.69	7.69	50.30	52.13	51.05	333.90	83.38	81.08	32.24	33.61	4.2%	32.84	159.80	59.75	57.53	nd	0.051	3.9	nd	nd	nd	8.0	70/75	44.92	33.13	61.20	bl
06/07/07	9:58	4240.04	7.73	6.01	7.6	50.13	52.25	51.10	328.80	83.46	81.03	32.16	33.67	4.7%	32.87	157.40	59.77	57.48	nd	0.044	3.6	nd	nd	nd	5.2	70/75	44.91	33.08	61.20	bl
06/11/07	12:08	4256.76	8.07	6.75	7.83	49.62	52.71	50.86	355.70	82.83	81.73	32.62	33.62	3.1%	32.73	170.80	59.72	57.68	1.852	0.067	4.0	nd	nd	nd	23.5	70/75	44.98	33.19	61.20	bv
06/12/07	9:51	4278.47	7.90	6.4	7.77	49.27	51.03	49.98	343.20	80.85	79.22	31.57	32.85	4.1%	32.10	164.40	57.44	55.84	1.345	0.086	3.7	nd	nd	nd	21.0	70/70	44.91	33.49	61.20	bl
06/13/07	12:00	4299.52	8.10	7.05	7.9	49.04	50.86	49.93	355.70	80.89	78.95	31.40	32.72	4.2%	32.06	170.30	57.39	55.57	0.933	0.093	4.1	nd	nd	nd	18.0	70/77	44.92	33.35	61.20	bv
06/14/07	9:15	4316.9	8.10	6.96	7.89	48.97	51.31	49.86	363.30	81.13	79.33	31.37	33.06	5.4%	32.04	174.20	57.62	55.92	0.961	0.095	4.1	nd	nd	nd	15.8	70/75	44.92	33.34	61.20	bv
												12 Point flux and recovery Period																		
06/19/07	10:30	4342.16	7.99	6.29	7.79	48.88	51.57	49.87	475.50	80.39	78.43	31.28	33.21	6.2%	32.03	229.30	57.01	55.18	1.056	0.067	3.4	nd	4.6	0.91	12.5	70/75	35.83	27.51	61.20	bl
06/20/07	10:31	4364.54	7.97	6.47	7.85	49.03	53.22	50.76	519.30	85.11	82.68	31.45	34.43	9.5%	32.73	251.10	61.44	59.01	1.122	0.092	3.9	nd	4.7	0.94	9.7	70/75	35.86	24.58	61.20	bl px out tds high. re-run point on 6-21
06/21/07	10:05	4386.46	7.87	6.39	7.77	48.78	51.86	49.95	453.00	83.80	80.41	31.23	33.42	7.0%	32.08	218.20	60.05	56.94	0.802	0.079	3.9	nd	4.6	0.88	7.5	70/75	35.85	25.02	61.20	bl
06/22/07	10:36	4410.98	7.73	5.96	7.57	48.86	51.73	49.91	492.80	87.71	82.49	31.30	33.35	6.5%	32.07	237.90	63.60	58.81	0.771	0.057	3.8	nd	4.6	0.95	24.3	70/75	36.08	22.45	61.20	bl
06/26/07	10:50	4433.05	7.79	5.91	7.66	48.83	51.12	49.78	371.80	80.13	78.28	31.27	32.94	5.3%	31.97	178.50	56.71	55.03	1.121	0.087	3.6	nd	4.8	0.80	21.8	70/75	45.19	34.07	61.20	bl
06/27/07	10:10	4454.51	7.91	6.22	7.72	48.81	51.39	49.91	397.80	84.82	82.69	31.26	33.11	5.9%	32.05	191.10	60.98	59.00	0.826	0.062	3.8	nd	4.7	0.81	18.5	70/75	45.20	29.77	61.20	bl
06/28/07	9:25	4476.05	7.96	6.32	7.75	48.85	51.71	49.99	429.60	88.34	85.65	31.30	33.35	6.5%	32.12	206.70	64.14	61.70	0.757	0.085	4.3	nd	4.7	0.86	15.8	70/75	45.19	27.13	61.20	bl
06/29/07	10:13	4497.56	8.02	6.14	7.83	48.63	51.44	50.06	307.40	81.49	80.02	31.15	33.15	6.4%	32.17	146.90	57.96	56.58	0.663	0.1	4.7	nd	4.7	0.67	12.6	70/75	54.01	38.91	61.20	bl
07/03/07	8:45	4520.82	7.93	6.03	7.78	48.84	51.07	49.63	335.80	84.83	82.52	31.27	32.88	5.1%	31.87	160.90	61.01	58.87	1.127	0.102	5.0	nd	4.7	0.74	9.7	70/75	53.99	34.69	61.20	bl
07/05/07	16:25	4527.33	8.12	7.84	7.88	49.18	52.07	50.38	385.80	90.10	87.82	31.54	33.59	6.5%	32.39	185.40	65.66	63.58	0.769	0.118	5.1	nd	4.3	0.79	9.0	50/70	53.99	31.14	61.20	bv
07/06/07	14:45	4532.55	8.13	6.59	7.87	49.05	50.73	49.99	290.70	81.29	79.88	31.46	32.65	3.8%	32.12	138.80	57.80	56.45	0.87	0.1	4.8	4.2	4.1	0.65	8.0	70/70	60.00	42.39	61.20	bv
07/09/07	13:50	4536.97	7.87	5.88	7.71	48.86	52.06	50.27	305.30	84.78	83.51	31.27	33.59	7.4%	32.27	145.80	60.93	59.72	1.383	0.082	4.3	nd	4.3	0.69	7.5	70/70	60.00	39.28	61.20	bl
07/10/07	16:40	4543.67	8.07	7.51	7.82	48.84	51.42	49.90	346.10	90.52	88.04	31.34	33.12	5.7%	32.06	165.80	66.15	63.79	1.204	0.142	4.9	nd	4.2	0.74	6.0	70/70	60.00	33.37	61.20	bv
												Most Affordable Point Period																		
07/24/07	17:25	4564.92	7.87	5.51	7.97	48.86	52.21	50.12	449.70	88.35	90.23	31.36	33.67	7.4%	32.23	216.60	65.88	64.07	0.889	0.074	3.8	nd	nd	0.95	25.8	70/70	54.70	30.56	60.17	bv
07/26/07	16:50	4591.4	7.84	5.98	7.85	48.85	51.69	49.95	460.50	90.25	88.03	31.30	33.38	6.6%	32.16	222.20	65.90	63.76	0.759	0.076	3.9	nd	nd	nd	21.9	70/70	54.67	30.21	60.95	bv
07/27/07	15:25	4607.78	7.94	5.82	7.78	48.84	51.86	50.11	425.50	90.00	88.08	31.30	33.47	6.9%	32.20	205.10	65.64	63.71	0.971	0.071	2.9	nd	5.3	nd	20.0	70/70	54.66	30.64	64.80	bv
08/07/07	9:36	4637.89	8.09	5.79	7.74	48.85	52.25	50.14	421.20	90.67	88.56	31.28	33.74	7.9%	32.27	202.60	66.29	64.33	1.08	0.096	4.9	nd	nd	nd	15.7	70/75	53.88	30.14	66.00	bl
08/08/07	9:27	4658.51	7.91	5.82	7.69	48.66	51.64	49.88	370.90	90.34	87.74	31.12	33.27	6.9%	32.02	177.90	65.93	63.54	0.76	0.086	4.5	nd	nd	nd	12.6	70/75	53.85	30.15	63.30	bl
08/09/07	9:37	4680.82	7.93	5.82	7.69	48.65	51.58	49.79	360.70	90.35	87.82	31.11	33.23	6.8%	31.97	173.00	65.94	63.69	1.173	0.187	14.9	nd	nd	nd	9.8	70/75	53.84	30.15	65.95	bl
08/10/07	9:24	4702.05	7.97	5.96	7.73	48.69	51.66	49.84	360.10	90.02	87.51	31.12	33.30	7.0%	32.00	172.70	65.68	63.35	0.672	0.103	5.1	4.6	4.5	0.82	6.5	75/85	53.85	30.21	62.85	bl
08/14/07	2:14	4721.44	7.97	6.07	7.74	48.89	51.86	50.02	413.70	89.63	87.44	31.28	33.42	6.8%	32.12	198.80	65.36	63.27	0.789	0.074	4.7	4.6	4.7	0.89	23.0	80/85	53.81	30.35	61.85	bl
08/15/07	10:18	4740.31	7.91	6.27	7.67	48.95	51.86	50.01	377.30	90.15	87.89	31.29	33.43	6.8%	32.14	181.20	65.80	63.72	0.865	0.065	3.9	nd	nd	nd	20.2	75/80	53.82	30.33	62.29	bl
08/16/07		4761.36	7.82	5.82	7.61	48.77	51.74	49.92	344.60	90.69	88.25	31.21	33.34	6.8%	32.06	165.10	66.27	64.03	0.799	0.058	4.0	nd	nd	nd	17.3	70/75	53.82	30.26	61.06	bl
08/17/07	9:35	4784.63	7.81	5.83	7.62	48.67	51.77	50.04	345.40	90.45	87.94	31.14	33.36	7.1%	32.15	165.30	66.11	63.71	0.624	0.061	4.3	4.5	5.3	2.5	14.2	70/75	53.79	30.27	61.94	bl
												MAP Average		7%		188.83						MAP Average		1.19						
												MAP Maximum		8%		222.20						MAP Maximum		2.5						
												MAP Minimum		6%		165.10						MAP Minimum		0.79						
Koch membranes - TFC 2822HF-400												**Membrane Ripening Period**																		
08/22/07	9:23	4805.31	7.91	7.52	7.73	48.86	50.91	49.67	529.30	80.90	78.61	31.30	32.74	4.6%	31.88	256.00	57.42	55.31	0.543	0.068	4.0	nd	nd	nd	11.3	70/75	45.12	34.39	59.82	bl
08/23/07	9:27	4827.84	7.93	7.54	7.75	48.88	50.81	49.57	516.70	80.84	78.51	31.29	32.69	4.5%	31.83	249.70	57.36	55.22	0.791	0.067	3.9	nd	nd	nd	8.0	70/75	45.12	34.39	60.76	bl
08/24/07	10:05	4850.75	7.88	7.36	7.69	49.04	50.86	49.79	531.20	81.01	78.74	31.42	32.73	4.2%	31.97	256.90	57.51	55.45	0.803	0.066	3.9	nd	nd	nd	5.0	70/75	45.12	34.32	59.93	bl
08/27/07	1:35	4856.41	7.81	6.95	7.64	48.72	50.65	49.53	590.40	81.14	78.76	31.17	32.55	4.4%	31.78	286.00	57.62	55.45	0.482	0.061	3.5	nd	nd	nd	24.0	70/75	45.09	34.34	55.24	bl
08/28/07	8:45	4875.44	7.84	6.73	7.66	48.78	50.79	49.56	546.80	80.80	78.83	31.28	32.69	4.5%	31.79	264.60	57.34	55.48	0.563	0.059	2.3	nd	nd	nd	21.5	70/75	45.12	34.57	59.93	bv
08/29/07	14:40	4903.70	7.77	6.31	7.59	48.56	50.62	49.43	524.20	81.15	78.83	31.10	32.56	4.7%	31.76	253.20	57.58	55.35	0.671	0.043	2.7	4.5	4.5	1.3	17.5	70/75	45.12	34.39	60.18	bv
08/30/07	8:35	4920.07	7.80	6.37	7.63	48.79	50.72	49.54	497.70	80.85	78.55	31.22	32.62	4.5%	31.78	239.90	57.36	55.16	0.691	0.042	1.9	nd	nd	nd	15.0	70/75	45.12	34.48	56.96	bv
08/31/07	10:25	4942.80	7.85	6.38	7.60	48.98	50.90	49.72	489.40	80.97	78.58	31.37	32.74	4.4%	31.90	236.30	57.44	55.31	0.645	0.042	2.6	nd	nd	nd	12.0	70/75	45.12	34.62	57.92	bv
09/05/07	2:25	4977.42	7.81	6.91	7.67	48.92	51.24	49.87	571.60	80.47	78.49	31.35	32.95	5.1%	32.03	276.60	57.00	55.15	0.643	0.065	3.0	nd	nd	nd	7.5	70/75	45.12	35.32	60.44	bl
09/06/07	9:20	4994.74	7.78	6.41	7.64	48.90	51.32	49.96	542.70	80.77	78.64	31.32	33.02	5.4%	32.08	262.50	57.25	55.33	0.755	0.07	3.1	4.5	4.5	1.4	5.1	70/75	45.14	35.40	56.85	bl
09/07/07	10:05	5019.44	7.93	7.36	7.73	49.03	51.03	49.85	624.70	80.35	78.44	31.43	32.90	4.7%	32.03	302.60	56.87	55.13	0.894	0.051	3.1	nd	nd	nd	22.1	70/75	45.12	35.07	65.25	bv
												12 Point flux and recovery Period																		
09/11/07	13:10	5044.56	7.87	6.23	7.78	48.82	51.77	49.97	798.40	80.46	78.67	31.24	33.35	6.8%	32.09	388.30	57.07	55.44	0.384	0.039	2.7	4.8	4.7	1.6	18.5	70/75	35.71	28.45	54.30	bv
09/12/07	16:25	5071.85	7.83	6.18	7.66	48.73	52.46	50.23	818.60	84.47	81.68	31.14	33.82	8.6%	32.23	400.70	60.61	58.02	0.427	0.036	2.7	4.7	4.7	1.6	15.0	70/75	35.74	25.68	57.60	bv px out tds high.
10/03/07	9:45	5269.35	7.92	6.84	7.75	48.73	50.90	49.47	841.70	82.58	79.11	31.21	32.83	5.2%	31.76	411.80	58.95	55.73	0.567	0.055	2.2	nd	nd	nd	9.5	70/75	35.86	26.10	58.72	bv
09/13/07	16:10	5094.23	7.77	6.49	7.58	48.70	54.98	51.05	881.60	90.32	87.05	31.25	35.75	14.4%	32.86	431.70	65.91	62.70	0.285	0.038	3.2	4.5	4.8	1.6	12.0	70/75	35.85	23.10	51.27	bv px out tds high.
10/19/07	9:33	5438.54	7.84	6.31	7.71	48.89	51.32	49.77	519.9	81.02	78.94	31.27	33.07	5.8%	31.96	251.20	57.45	55.57	0.648	0.176	6.8	nd	nd	nd	10.2	70/75	45.06	35.57	66.00	bl
10/10/07	16:08	5303.34	7.78	6.24	7.63	48.60	51.29	49.81	598.80	80.43	78.89	31.02	32.99	6.4%	31.95	290.00	56.95	55.53	0.588	0.093	3.8	nd	nd	nd	27.7	70/75	45.28	36.02	56.09	bl
10/11/07	8:52	5322.08	7.78	6.21	7.65	49.04	50.79	49.58	563.9	81.09	78.79	31.41	32.68	4.0%	31.83	273.00	57.63	55.49	0.699	0.103	3.2	nd	nd	nd	25.1	70/75	45.09	34.72	60.49	bl
10/18/07	9:57	5414.92	7.81	6.27	7.67	48.84	51.15	49.79	532.5	80.94	78.87	31.26	32.93	5.3%	31.98	253.10	57.45	55.54	0.569	0.180	7.6	nd	nd	nd	13.1	70/75	45.06	35.63	58.76	bl
10/02/07	8:40	5244.29	7.88	6.19	7.73	48.83	51.08	49.63	634.20	80.86	78.98	31.30	32.91	5.1%	31.87	307.80	57.37	55.63	0.559	0.055	3.6	nd	nd	nd	12.2	70/75	45.26	34.72	58.75	bv
09/14/07	16:45	5107.14	7.84	6.50	7.65	48.73	51.43	50.00	588.40	81.15	79.23	31.24	33.10	6.0%	32.12	284.70	57.62	55.84	0.447	0.037	3.0	4.6	4.7	1.3	10.5	70/75	45.22	34.92	58.75	bv
09/17/07	14:55	5113.46	7.94	7.21	7.76	48.75	51.46	49.78	666.80	84.89	82.45	31.20	33.09	6.1%	31.97	323.70	60.98	58.72	0.725	0.080	3.1	4.9	4.8	1.4	9.7	70/75	45.06	31.27	53.83	bl

Water Quality Data

TIME			pH			CONDUCTIVITY						TDS							TURBIDITY		SDI	BORON			OTHER					
				pH				Conductivity (mS/cm)							TDS (mg/L)				Turbidity (NTU)		Density Index	Boron (mg/L)				Inhibitor Pump			FEED VFD	
Date MM/DD/YY	Time hh:mm	Operation Time hh.hh	$pH_{F\text{-}sys}$ SC5	$pH_{P\text{-}sys}$ SC11	$pH_{C\text{-}sys}$ SC6	$C_{CF\text{-}out}$ SC3	$C_{F\text{-}PX\text{-}out}$ SC4	$C_{F\text{-}sys}$ SC5	$C_{P\text{-}sys}$ SC11	$C_{C\text{-}sys}$ SC6	$C_{C\text{-}PX\text{-}out}$ SC7	$TDS_{CF\text{-}out}$ SC3	$TDS_{F\text{-}PX\text{-}out}$ SC4	PX % Inc	$TDS_{F\text{-}sys}$ SC5	$TDS_{P\text{-}sys}$ SC11	$TDS_{C\text{-}sys}$ SC6	$TDS_{C\text{-}PX\text{-}out}$ SC7	$NTU_{MF\text{-}in}$ CART	$NTU_{CF\text{-}out}$ meter	$SDI_{CF\text{-}out}$ CART	$B_{CF\text{-}out}$ SC3	$B_{F\text{-}sys}$ SC5	$B_{P\text{-}sys}$ SC11	V_{TANK} (gallons)	Speed (gph)	HP VFD Speed (Hertz)	PX VFD Speed (Hertz)	VFD Speed (Hertz)	Notes
10/04/07	16:10	5296.06	8.00	7.23	7.70	48.72	50.94	49.48	749.90	88.17	85.08	31.19	32.75	5.0%	31.80	365.20	61.16	59.26	0.684	0.094	4.3	nd	nd	nd	5.5	7075	45.09	28.14	60.73	bv
09/18/07	9:20	5131.86	7.98	7.05	7.75	49.02	52.94	50.49	780.30	90.39	88.07	31.42	34.22	8.9%	32.47	380.60	66.02	63.85	0.398	0.074	3.2	4.7	4.9	1.6	7.5	70/75	45.05	27.51	56.27	bl px out tds high.
09/19/07	12:37	5150.4	8.01	7.65	7.84	49.16	51.21	49.91	563.30	80.79	78.97	31.48	32.96	4.7%	32.07	272.70	57.27	55.67	0.754	0.081	4.3	4.7	4.8	1.3	4.6	70/75	53.65	40.84	62.99	bl
09/20/07	9:52	5170.33	7.96	7.14	7.76	48.91	51.19	49.83	563.20	84.88	82.40	31.32	32.96	5.2%	32.01	272.70	61.01	58.74	0.552	0.076	3.6	4.8	4.9	nd	22.7	70/75	53.63	36.18	61.21	bl
09/21/07	11:33	5194.57	7.96	6.85	7.73	48.86	51.39	49.87	633.10	90.52	87.67	31.25	33.11	6.0%	32.02	307.00	66.09	63.46	0.514	0.079	3.6	4.7	4.9	1.4	19.1	70/75	53.58	31.29	60.32	bl
10/17/07	9:15	5392.50	7.83	6.17	7.69	48.91	50.93	49.73	396.6	80.18	79.02	31.28	32.79	4.8%	31.92	190.50	56.75	55.64	1.377	0.201	11.4	nd	nd	nd	16.3	70/75	60.00	46.56	66.00	bl re-run point to avoid FWF water quality is
09/25/07	14:27	5205.27	8.04	7.73	7.86	48.88	51.52	49.81	558.20	80.25	79.21	31.25	33.17	6.1%	31.96	270.10	56.83	55.79	0.865	0.078	3.4	4.6	4.4	1.2	17.6	70/75	60.00	46.05	64.98	bl
10/16/07	14:48	5375.85	7.93	6.61	7.77	48.87	51.76	49.99	470.6	84.56	83.08	31.21	33.36	6.9%	32.09	226.70	60.71	59.31	0.722	0.109	3.6	nd	nd	nd	18.5	70/75	60.00	41.48	66.00	bl re-run point to avoid FWF water quality is
09/26/07	17:05	5212.84	8.07	7.22	7.85	48.73	51.61	49.61	607.80	84.73	83.25	31.17	33.25	6.7%	31.87	295.10	60.73	59.35	0.692	0.054	3.2	4.3	4.3	1.3	16.5	70/75	60.00	40.40	65.23	bv
10/11/07	14:25	5326.13	7.76	6.26	7.64	49.31	52.03	50.26	518.8	90.25	87.35	31.55	33.29	5.5%	32.18	250.50	65.72	63.10	0.944	0.090	3.2	nd	nd	nd	24.5	70/75	60.00	35.70	58.71	bl re-run point to avoid FWF water quality is
10/12/07	9:28	5345.20	7.81	6.16	7.62	48.78	51.61	50.02	492.9	90.08	87.76	31.24	33.30	6.6%	32.14	238.00	65.74	63.58	0.952	0.172	7.2	nd	nd	nd	22.1	70/75	60.00	36.03	66.00	bl re-run point to avoid FWF water quality is
09/27/07	15:55	5221.52	8.05	7.03	7.8	48.74	51.60	49.73	668.50	90.59	88.48	31.23	33.26	6.5%	31.93	324.20	66.16	64.15	0.647	0.054	4.0	4.2	4.2	1.3	15.5	70/75	59.94	34.42	65.46	bv
												Most Affordable Point (MAP) Period																		
10/30/07	15:15	5470.73	7.98	6.89	7.79	48.66	50.51	49.38	533.10	83.31	81.09	30.90	32.38	4.8%	31.59	257.40	59.49	57.36	0.563	0.128	4.6	nd	nd	nd	5.9	70/75	54.17	37.88	62.23	bl
10/31/07	10:33	5488.11	7.91	6.41	7.73	48.78	50.82	49.53	514.10	84.12	81.58	31.23	32.73	4.8%	31.78	248.40	60.28	57.96	0.506	0.117	4.0	4.5	4.5	1.2	22.6	70/75	54.14	37.91	61.22	bl
11/01/07	10:31	5510.30	7.93	6.60	7.75	48.86	51.27	49.78	543.90	84.12	82.01	31.31	33.02	5.5%	31.99	263.20	60.32	58.37	0.38	0.106	3.2	nd	nd	nd	19.7	70/75	53.69	37.59	61.08	bl
11/02/07	10:29	5532.53	8.01	6.95	7.81	48.93	51.37	49.73	551.40	83.85	82.03	31.35	33.11	5.6%	31.95	266.90	60.12	58.41	0.385	0.105	3.2	4.4	4.5	1.3	16.5	70/75	53.70	37.85	60.88	bl
11/06/07	14:17	5556.91	7.94	6.85	7.73	48.87	51.90	50.01	560.80	84.77	82.83	31.53	33.44	6.1%	32.11	271.20	60.89	59.05	0.566	0.1	3.1	nd	nd	nd	13.2	70/75	53.73	37.46	60.04	bl
11/07/07	10:18	5574.92	7.86	6.53	7.68	48.77	51.78	49.76	533.70	84.30	82.41	31.23	33.39	6.9%	31.97	258.10	60.55	58.72	0.482	0.107	3.6	4.3	4.5	1.3	10.5	70/75	53.73	37.65	58.98	bl
11/08/07	9:37	5596.39	7.84	6.41	7.66	48.79	51.20	49.58	506.90	84.34	82.15	31.26	33.03	5.7%	31.82	244.90	60.55	58.51	0.465	0.106	3.2	nd	nd	nd	7.6	70/75	53.73	37.53	59.36	bl
11/09/07	13:30	5621.89	7.85	6.52	7.65	48.47	51.13	49.49	497.90	83.39	81.49	30.92	32.86	6.3%	31.71	240.30	59.63	57.79	0.399	0.099	3.2	nd	4.5	1.2	4.3	70/75	53.85	38.12	59.77	bl
11/12/07	14:43	5626.18	7.92	6.95	7.75	48.37	51.12	49.52	558.30	83.01	81.01	30.85	32.83	6.4%	31.63	269.80	59.29	57.39	0.776	0.113	3.7	4.5		1.3	24.0	70/75	53.85	38.26	57.76	bl
11/13/07	15:52	5651.33	7.90	6.61	7.71	48.21	51.27	49.31	513.40	82.69	80.98	30.71	32.92	7.2%	31.49	247.70	58.91	57.36	0.523	0.114	3.8	nd	nd	nd	20.9	70/75	53.82	38.75	63.06	bl
11/14/07	10:30	5668.26	7.83	6.39	7.66	48.76	51.40	49.61	497.50	83.09	81.26	31.04	33.04	6.4%	31.77	240.00	59.33	57.64	0.486	0.105	3.2	4.1	3.9	1.3	18.0	70/75	53.82	38.79	60.12	bl
11/15/07	8:34	5668.52	7.76	6.32	7.63	48.97	51.84	50.01	493.30	84.35	82.26	31.38	33.41	6.5%	32.09	238.40	60.54	58.54	0.431	0.103	2.9	nd	nd	nd	15.4	70/75	53.85	38.73	60.55	bl
11/16/07	10:07	5712.33	7.82	6.36	7.64	48.77	51.42	49.57	495.50	83.67	81.79	31.21	33.12	6.1%	31.81	239.30	60.02	58.17	0.398	0.102	2.9	4.0	3.9	1.3	9.6	70/75	53.85	38.32	61.88	bl
												Base Line Test																		
11/19/07	16:15	5719.24	7.93	7.16	7.76	48.94	51.52	49.74	617.20	80.16	78.35	31.30	33.21	6.1%	31.96	299.30	56.77	55.08	0.406	0.11	3.4	nd	nd	nd	8.3	70/75	44.89	36.33	55.32	bl
11/20/07	14:52	5741.85	8.04	7.73	7.85	48.93	51.09	49.62	651.10	80.49	78.41	31.32	32.91	5.1%	31.85	315.90	57.02	55.11	0.456	0.113	3.2	nd	nd	nd	5.6	70/75	44.86	35.33	58.25	bl
11/21/07	10:07	5761.11	7.94	7.35	7.78	48.81	51.08	49.59	626.50	80.01	78.03	31.27	32.91	5.2%	31.84	303.90	56.64	54.78	0.382	0.116	3.9	4.1	nd	1.5	23.1	70/75	44.88	35.63	61.51	bl
											MAP Average	33.02	6.0%			252.74						MAP Average		1.27						
											MAP Maximum	33.44	7.2%			271.20						MAP Maximum		1.30						
											MAP Minimum	32.38	4.8%			238.40						MAP Minimum		1.20						
Hydranautics membranes - SWC5												**Membrane Ripening Period**																		
11/28/07	3:05	5762.47	8.00	8.25	7.81	50.99	53.93	52.26	213.70	84.90	83.20	32.85	34.86	6.1%	33.67	101.30	61.21	59.41	0.934	0.144	5.3	nd	nd	nd	22.3	80/80	44.90	33.98	55.13	jm, hyd memb 1st point
11/29/07	15:25	5772.96	7.93	6.08	7.75	50.94	53.60	52.21	199.70	85.32	82.98	32.65	34.57	5.9%	33.47	94.27	61.36	59.74	0.633	0.077	4.5	nd	nd	nd	20.5	100/100	44.85	33.84	56.12	bv
11/30/07	14:30	5795.87	7.96	6.18	7.8	51.05	53.95	52.25	197.60	85.48	83.48	32.84	34.88	6.2%	33.69	92.93	61.54	59.62	0.473	0.071	4.5	4.9	4.7	0.72	16.5	80/80	44.85	33.81	59.95	bv
12/03/07	16:20	5803.76	7.95	6.20	7.79	51.36	53.57	52.17	212.60	85.45	83.02	33.05	34.62	4.8%	33.70	100.80	61.49	59.34	0.439	0.08	5.1	nd	nd	nd	15.5	80/80	44.88	33.49	56.08	bv
12/04/07	9:35	5821.21	7.89	6.01	7.73	48.73	50.78	49.44	200.10	80.56	78.47	31.19	32.71	4.9%	31.72	94.91	57.16	55.13	0.801	0.082	4.7	nd	nd	nd	12.8	80/80	44.88	33.63	58.67	bl
12/05/07	8:39	5842.23	7.88	5.99	7.74	51.38	53.65	52.13	197.80	85.30	83.08	33.09	34.73	5.0%	33.64	93.81	61.40	59.39	1.683	0.09	6.5	5.0	4.5	0.73	9.3	80/80	44.87	33.68	58.53	bl
12/06/07	9:25	5865.23	7.91	6.01	7.74	51.38	53.69	52.07	200.10	85.11	82.86	33.09	34.73	5.0%	33.61	94.84	61.24	59.19	1.456	0.088	4.5	nd	nd	nd	5.8	80/80	44.86	33.78	58.56	bl
12/07/07	8:43	5886.52	7.81	5.96	7.67	51.51	53.68	52.2	203.2	85.46	83.06	33.18	34.71	4.6%	33.68	96.49	61.60	59.37	0.738	0.072	3.6	4.9	4.8	0.76	22.6	80/80	44.87	33.38	59.43	bl
12/10/07	15:57	5893.98	7.83	5.98	7.66	50.91	53.39	52.05	215.9	85.08	82.79	32.75	34.49	5.3%	33.54	102.30	61.18	59.01	0.535	0.040	2	nd	nd	nd	21.4	80/80	44.88	33.72	56.05	bl
12/11/07	14:55	5916.95	7.81	5.93	7.67	50.81	53.29	52.03	204.8	84.96	82.78	32.66	34.41	5.4%	33.51	96.68	61.02	58.98	0.573	0.048	1.9	nd	nd	nd	17.7	80/80	44.89	33.54	59.24	bl
12/12/07	10:12	5934.55	7.88	6.05	7.71	51.39	53.68	52.23	205.5	85.27	83.05	33.09	34.75	5.0%	33.71	97.41	61.39	59.35	0.235	0.046	2.5	4.5	4.7	0.75	15.1	80/80	44.91	33.69	57.32	bl
12/13/07	9:32	5957.70	7.89	6.07	7.74	51.46	53.69	52.12	202.3	85.61	83.39	33.16	34.76	4.8%	33.64	96.04	61.71	59.66	0.266	0.045	2.4	nd	nd	nd	11.6	80/80	44.93	33.49	59.93	bl
12/14/07	9:03	5979.32	7.87	6.02	7.72	51.56	53.71	52.1	198.7	85.35	82.95	33.26	34.83	4.7%	33.65	94.38	61.55	59.27	0.485	0.051	2.9	4.7	4.6	0.75	8.1	80/80	44.94	33.49	57.81	bl
												12 Point flux and recovery Period																		
01/04/08	10:29	6044.24	7.87	6.11	7.71	51.19	53.58	52.14	243.2	83.41	81.24	32.96	34.66	5.2%	33.65	115.50	59.77	57.73	0.362	0.054	2.8				20.1	70/75	36.13	28.25	57.52	bl
01/08/08	13:39	6073.15	7.86	6.06	7.68	50.82	53.91	52.07	267.7	87.51	83.61	32.70	34.91	6.8%	33.59	127.70	63.43	59.86	2.958	0.049	2.8	4.4	5.4	0.87	16.5	70/75	36.12	25.37	51.67	bl
01/09/08	14:40	6098.28	7.80	6.09	7.60	50.43	53.19	51.44	289.5	91.96	83.57	32.21	34.22	6.2%	33.04	137.70	67.25	59.72	1.820	0.046	2.3	4.8	4.7	0.95	13.9	70/75	22.15	36.13	54.62	bv
01/10/08	9:34	6117.08	7.86	5.94	7.69	51.12	53.16	51.78	196.2	84.59	82.51	32.92	34.42	4.6%	33.41	93.24	60.80	58.86	1.696	0.044	2.3	4.5	4.6	0.71	11.5	70/75	45.35	33.52	62.75	bl
01/11/08	10:39	6140.48	7.83	5.92	7.66	50.92	53.96	51.71	212.7	89.34	87.16	32.78	34.93	6.6%	33.34	100.80	65.06	63.07	1.689	0.049	2.9	4.4	4.6	0.75	8.7	70/75	45.33	30.04	54.59	bl
01/15/08	10:04	6165.01	7.82	5.86	7.61	51.21	53.73	51.78	232.1	94.29	88.75	32.97	34.77	5.5%	33.39	110.30	69.56	64.49	1.622	0.044	2.7	5.4	5	0.77	6	70/75	45.35	26.52	57.19	bl
01/16/08	10:36	6187.46	7.82	5.81	7.65	50.96	53.56	51.64	165.7	85.17	83.46	32.79	34.65	5.7%	33.28	78.46	61.34	59.72	1.362	0.049	2.6	4.9	4.8	0.59	13.9	70/75	53.96	39.64	60.84	bl
01/17/08	9:00	6208.13	7.85	5.82	7.68	51.36	53.93	51.89	169.9	90.43	87.75	33.10	34.94	5.6%	33.51	80.77	66.14	63.61	1.789	0.051	2.7	4.7	4.6	0.60	11.2	70/75	54.06	34.92	58.45	bl
01/18/08	9:45	6229.53	7.79	5.79	7.60	51.11	53.99	51.76	182.5	95.49	91.59	32.90	34.93	6.2%	33.38	86.22	70.66	67.08	2.419	0.050	2.7	4.6	4.5	0.64	8.7	70/75	54.05	30.76	57.09	bl
01/23/08	9:28	6253.18	7.87	5.86	7.74	50.63	53.47	51.22	149.8	83.58	82.57	32.57	34.54	6.0%	33.02	70.85	60.01	58.94	1.372	0.059	2.8	6.7	5.2	0.57	6.1	70/75	59.82	45.21	65.92	bl
01/30/08	10:33	6292.08	7.92	5.92	7.72	50.87	53.32	51.42	168.1	89.06	86.87	32.74	34.49	5.3%	33.12	79.48	64.82	62.81	2.580	0.046	3.1	5.1	5.2	0.61	22.6	70/75	60.00	39.08	62.24	bl
01/31/08	9:24	6312.09	7.91	5.84	7.67	51.16	53.39	51.66	177.7	94.83	91.32	32.96	34.61	5.0%	33.32	84.28	70.11	66.85	2.683	0.045	2.6	5.1	4.9	0.64	20.5	70/75	60.00	34.01	59.29	bl
												Base Line Test																		
02/01/08	9:17	6334.14	7.87	5.93	7.73	51.18	53.31	51.66	200.7	85.13	82.91	32.97	34.55	4.8%	33.31	95.23	61.39	59.24	1.692	0.045	2.7	4.9	nd	0.74	18	70/75	44.86	33.40	55.41	bl

Water Quality Data

TIME			pH			CONDUCTIVITY						TDS							TURBIDITY		SDI	BORON			OTHER					
				pH				Conductivity (mS/cm)						TDS (mg/L)					Turbidity (NTU)		Density Index	Boron (mg/L)				Inhibitor Pump			FEED VFD	
Date MM/DD/YY	Time hh:mm	Operation Time hh.hh	$pH_{F\text{-}sys}$ SC5	$pH_{P\text{-}sys}$ SC11	$pH_{C\text{-}sys}$ SC6	$C_{CF\text{-}out}$ SC3	$C_{F\text{-}PX\text{-}out}$ SC4	$C_{F\text{-}sys}$ SC5	$C_{P\text{-}sys}$ SC11	$C_{C\text{-}sys}$ SC6	$C_{C\text{-}PX\text{-}out}$ SC7	$TDS_{CF\text{-}out}$ SC3	$TDS_{F\text{-}PX\text{-}out}$ SC4	PX % Inc	$TDS_{F\text{-}sys}$ SC5	$TDS_{P\text{-}sys}$ SC11	$TDS_{C\text{-}sys}$ SC6	$TDS_{C\text{-}PX\text{-}out}$ SC7	$NTU_{MF\text{-}in}$ CART	$NTU_{CF\text{-}out}$ meter	$SDI_{CF\text{-}out}$ CART	$B_{CF\text{-}out}$ SC3	$B_{F\text{-}sys}$ SC5	$B_{P\text{-}sys}$ SC11	V_{TANK} (gallons)	Speed (gph)	HP VFD Speed (Hertz)	PX VFD Speed (Hertz)	Speed (Hertz)	Notes
												Most Affordable Point (MAP) Period																		
02/05/08	2:31	6365.24	7.78	5.78	7.59	50.33	53.28	51.62	174.1	89.82	87.16	32.33	34.29	6.1%	33.08	81.95	65.37	62.88	3.942	0.037	2.5	nd	nd	nd	15.1	70/75	54.49	35.36	62.34	bl
02/06/08	4:43	6389.70	7.89	5.98	7.69	50.86	53.19	51.5	183.4	89.49	86.65	32.71	34.33	5.0%	33.13	86.49	65.17	62.61	2.692	0.046	2.8	nd	nd	nd	12.4	70/75	53.75	34.89	57.89	bl
02/07/08	10:39	6407.62	7.76	5.76	7.58	51.09	53.26	51.71	175.2	89.48	86.67	32.89	34.44	4.7%	33.34	82.96	65.21	62.64	2.022	0.044	2.7	nd	nd	nd	10.8	70/75	53.74	35.19	59.68	bl
02/08/08	11:15	6430.41	7.81	5.86	7.61	50.91	53.03	51.54	181.5	89.29	86.36	32.73	34.25	4.6%	33.19	85.91	65.05	62.36	1.010	0.051	2.7	nd	nd	nd	8.2	70/75	53.78	34.86	58.09	bl
02/12/08	9:12	6455.29	7.77	5.82	7.59	51.05	53.55	51.76	189.8	90.05	87.42	32.86	34.66	5.5%	33.37	89.91	65.71	63.29	2.455	0.051	3.8	nd	nd	nd	5.7	70/75	54.13	35.04	60.85	bl
02/13/08	11:00	6479.09	7.74	5.79	7.54	51.23	53.79	51.81	185.1	89.88	87.41	32.99	34.83	5.6%	33.41	87.81	65.59	63.29	1.828	0.049	3.1	nd	nd	nd	22.8	70/75	54.18	34.95	59.26	bl
02/14/08	11:37	6501.86	7.78	5.82	7.61	50.97	53.3	51.67	183.5	89.86	87.18	32.79	34.46	5.1%	33.31	86.82	65.53	63.09	1.811	0.051	3.3	nd	nd	nd	20.2	70/75	54.20	34.79	58.69	bl
02/15/08	9:22	6523.60	7.85	5.87	7.64	51.23	53.63	51.85	184.8	89.81	87.36	32.98	34.73	5.3%	33.46	87.61	65.49	63.25	1.307	0.050	3.3	nd	nd	nd	17.9	70/75	54.21	35.01	61.39	bl
02/19/08	0:00	6547.64	7.89	6.43	7.67	51.1	53.23	51.56	194.4	90.53	87.49	32.89	34.37	4.5%	33.24	92.05	66.14	63.17	0.792	0.048	3.5	nd	nd	nd	15	70/75	54.21	34.34	59.02	bv
02/20/08	10:21	6566.62	7.83	5.85	7.64	51.06	53.72	51.62	191.6	89.64	87.12	32.86	34.74	5.7%	33.27	90.82	65.35	63.04	0.743	0.045	2.8	nd	nd	0.7	13.3	70/75	54.20	34.98	61.37	bl
												MAP Average		5.2%		87.23														
												MAP Maximum		6.1%		92.05														
												MAP Minimum		4.5%		81.95														
												Base Line Test										nd	nd	nd						
02/21/08	9:27	6587.81	7.82	6.02	7.67	51.11	53.37	51.59	205.1	84.55	82.58	32.89	34.52	5.0%	33.27	97.16	60.74	58.95	0.880	0.046	2.9	nd	nd	nd	10.8	70/75	44.94	33.87	56.11	bl
02/22/08	10:09	6612.11	7.85	5.97	7.69	50.78	53.04	51.45	199.4	84.15	81.82	32.67	34.28	4.9%	33.14	94.44	60.41	58.27	2.617	0.045	3.5	nd	nd	0.76	8	70/75	45.33	33.90	59.02	bl
DOW-FILMTEC membranes - Hybrid												**Membrane Ripening Period**																		
02/27/08	11:38	6632.19	7.83	6.91	7.68	50.72	53.09	51.59	530.5	83.84	81.88	32.64	34.27	5.0%	33.22	256.50	60.08	58.29	1.631	0.048	3	nd			6	70/75	44.91	33.81	55.96	bl
02/28/08	9:37	6654.18	7.86	6.47	7.69	51.01	53.14	51.55	533.4	84.61	82.38	32.83	34.35	4.6%	33.22	257.80	60.84	58.77	1.516	0.046	2.8	nd			3.8	70/75	44.96	33.23	58.17	bl
02/29/08	10:00	6676.80	7.76	6.45	7.61	50.94	53.19	51.59	550.1	84.36	82.26	32.79	34.37	4.8%	33.25	266.10	60.55	58.65	1.285	0.045	2	nd			21.8	70/75	44.97	33.52	56.34	bl
03/04/08	9:42	6699.74	7.78	6.41	7.65	51.03	53.65	51.68	567.5	83.76	82.05	32.84	34.69	5.6%	33.31	274.60	60.05	58.46	1.527	0.050	2.8	nd			19.2	70/75	44.96	34.39	59.97	bl
03/05/08	9:49	6721.78	7.80	6.32	7.66	51.02	53.31	51.68	566.7	84.33	82.25	32.85	34.45	4.9%	33.31	273.80	60.53	58.65	1.202	0.052	3.1	nd			16.6	70/75	44.97	33.49	56.43	bl
03/06/08	10:06	6746.06	7.79	6.37	7.63	51.03	53.84	51.77	561.1	84.14	82.35	32.83	34.82	6.1%	33.38	271.60	60.39	58.72	1.258	0.050	3	nd			14	70/75	44.97	34.31	59.08	bl
03/07/08	10:48	6768.77	7.81	6.44	7.66	50.91	53.14	51.47	577.6	84.57	82.39	32.74	34.34	4.9%	33.16	279.60	60.75	58.77	0.819	0.056	3.6	nd			11.7	70/75	44.94	33.42	56.38	bl
03/11/08	10:40	6794.70	7.81	6.32	7.65	51.23	53.49	51.98	592.7	85.04	82.87	32.99	34.57	4.8%	33.51	287.10	61.17	59.17	1.208	0.048	3.2	nd			8.2	70/75	44.97	33.49	56.47	bl
03/12/08	13:50	6820.87	7.78	6.33	7.63	51.26	53.56	51.9	579.5	85.19	83.07	33.01	34.61	4.8%	33.43	280.70	61.30	58.38	1.545	0.048	3.6	nd			5.8	70/75	45.00	33.55	59.65	bv
03/13/08	12:30	6842.52	7.68	6.03	7.57	51.16	53.77	51.95	579.7	85.07	82.97	32.94	34.75	5.5%	33.48	280.30	61.18	59.23	1.808	0.047	3.5	nd			9.5	70/75	44.97	33.25	57.33	bv
03/18/08	11:11	6884.90	7.67	5.96	7.53	51.33	54.18	52.19	558.3	85.34	83.32	33.06	35.07	6.1%	33.66	270.20	61.45	59.61	1.733	0.043	2.9	nd			5	70/75	44.99	34.28	62.45	bl
												12 Point flux and recovery Period																		
03/19/08	11:07	6907.13	7.59	5.95	7.51	51.54	53.95	52.04	693.1	82.72	80.73	33.21	34.93	5.2%	33.57	336.60	59.07	57.26	1.265	0.044	2.7	nd			22.8	70/75	35.77	29.06	53.43	bl
03/20/08	10:22	6930.38	7.65	6.06	7.55	51.48	53.92	52.09	721.7	86.29	82.03	33.16	34.89	5.2%	33.61	350.90	62.32	58.43	1.829	0.043	2.8	nd			20.4	70/75	35.77	26.16	55.32	bl
03/21/08	9:42	6952.07	7.71	6.05	7.53	51.39	53.99	52.22	811.1	92.18	83.02	33.10	34.95	5.6%	33.69	396.10	67.65	59.32	1.038	0.046	3.4	nd			18	70/75	35.77	22.03	51.47	bl
03/25/08	10:18	6977.99	7.71	6.05	7.56	51.46	53.89	52.14	578.4	85.24	83.05	33.14	34.87	5.2%	33.63	280.20	61.36	59.36	0.796	0.046	3.6	nd			15.6	70/75	44.82	33.84	58.11	bl
03/26/08	10:10	7000.10	7.77	6.19	7.59	51.37	53.87	52.01	627.9	88.83	86.01	33.09	34.85	5.3%	33.53	303.90	64.63	62.05	0.726	0.052	4.6	nd			13.2	70/75	44.79	30.15	55.47	bl
04/08/08	9:52	7138.88	7.73	6.06	7.56	51.47	53.68	52.12	663.1	94.21	87.53	33.16	34.72	4.7%	33.62	321.90	69.48	63.41	3.566	0.043	4.9	nd			19.4	70/75	45.26	26.57	58.62	bl
03/27/08	10:22	7024.29	7.78	6.16	7.58	51.53	53.98	52.21	649.4	93.64	88.14	33.20	34.94	5.2%	33.67	315.20	68.95	63.98	1.703	0.053	4.8	nd			10.8	70/75	44.79	26.75	59.07	bl
04/01/08	13:40	7060.61	7.93	6.34	7.74	51.57	54.5	52.28	511.8	85.48	83.93	33.22	35.34	6.4%	33.78	247.40	61.70	60.23	0.673	0.050	7.2	nd			6.8	70/75	54.02	40.66	64.66	bv, sdi 10 min
04/04/08	12:13	7115.72	7.86	6.33	7.67	51.47	53.55	52.03	530.4	90.11	86.88	33.15	34.62	4.4%	33.56	256.40	65.77	62.83	0.698	0.047	7.1	nd			21.8	70/75	53.99	34.88	64.09	bl, SDI 10 min
04/09/08	10:19	7161.11	7.71	6.01	7.51	51.63	53.98	52.32	533.1	95.64	90.19	33.27	34.95	5.0%	33.76	257.70	70.81	65.83	2.206	0.043	4.6	nd			17	70/75	53.85	30.56	61.91	bl
04/10/08	9:44	7182.91	7.71	5.96	7.49	51.54	53.92	52.19	581.4	101.7	93.19	33.19	34.89	5.1%	33.67	281.80	76.29	68.52	1.357	0.045	4.4	nd			14.7	70/75	53.91	26.98	59.11	bl
04/11/08	9:55	7205.52	7.70	5.89	7.55	51.48	54.16	52.37	435.4	86.11	84.82	33.16	35.06	5.7%	33.77	209.30	62.19	60.97	0.874	0.047	4.6	nd			12.2	70/75	60.00	43.68	66.00	bl
04/16/08	9:37	7235.45	7.78	6.04	7.62	51.71	54.35	52.37	463.3	89.76	87.59	33.32	35.23	5.7%	33.79	223.20	65.49	63.48	0.648	0.049	4.7	nd			9.4	70/75	60.00	39.61	66.00	bl
04/17/08	8:18	7255.53	7.81	6.03	7.61	51.77	54.47	52.42	490.9	95.35	92.28	33.36	35.36	6.0%	33.83	237.00	70.53	67.71	0.644	0.055	4.6	nd			6.5	70/75	60.00	34.54	64.45	bl
												Base Line Test																		
04/18/08	9:34	7278.52	7.79	6.29	7.66	51.72	53.92	52.41	585.7	85.22	82.98	33.32	34.91	4.8%	33.83	283.80	61.38	59.32	0.569	0.058	4.8	nd			5.1	70/75	45.00	33.81	60.64	bl
												Most Affordable Point (MAP) Period																		
04/23/08	7:40	7296.05	7.74	5.92	7.59	51.82	54.67	52.59	511.5	91.45	89.01	33.39	35.55	6.5%	33.95	247.40	66.99	64.76	1.112	0.045	4	nd			23.7	70/75	53.99	34.81	66.00	bl
04/24/08	8:13	7318.79	7.71	5.88	7.56	51.83	54.59	52.44	502.4	90.51	87.97	33.42	35.47	6.1%	33.86	242.90	66.15	63.82	0.665	0.048	4.3	nd			21.5	70/75	54.02	35.57	64.48	bl
04/25/08	8:07	7340.85	7.69	5.92	7.54	51.77	54.17	52.34	499.7	90.87	88.11	33.36	35.11	5.2%	33.78	241.40	66.48	63.95	0.655	0.045	3.9	nd			19.4	70/75	53.99	34.98	64.05	bl
04/29/08	10:07	7365.37	7.75	6.02	7.59	51.71	54.48	52.57	510.6	89.09	87.28	33.32	35.34	6.1%	33.92	246.70	64.87	63.21	0.765	0.049	4.9	nd			16.8	70/75	53.99	36.82	66.00	bl
04/30/08	11:00	7388.37	7.74	6.01	7.55	51.88	54.05	52.51	501.8	90.03	87.12	33.44	35.01	4.7%	33.89	242.40	65.71	63.03	1.183	0.053	6.9	nd			14.5	70/75	53.99	35.83	66.00	bl
05/01/08	12:41	7412.47	7.72	6.05	7.58	51.65	55.02	52.59	496	88.94	87.27	33.27	35.77	7.5%	33.93	239.40	64.69	63.17	0.868	0.055	6.9	nd			12.1	70/75	53.96	37.53	66.00	bl
05/02/08	8:48	7431.05	7.74	6.03	7.58	51.69	53.81	52.24	509.2	89.96	87.02	33.31	34.82	4.5%	33.70	246.00	65.62	62.94	0.550	0.061	7.5	nd			10.4	70/75	53.97	35.68	64.68	bl
Toray Membranes - TM800E-400 (Set 2)												**Membrane Ripening Period**																		
05/16/08	10:30	7475.85	7.89	6.05	7.75	51.39	53.88	52.08	265.3	85.61	83.54	33.07	34.84	5.4%	33.58	126.30	61.71	59.81	nd	0.025	3.6	nd	4.7	0.55	nd	nd	45.09	34.28	57.83	bl - This SDI is with Zenon running thru me
05/20/08	9:16	7555.25	7.78	5.92	7.63	51.55	54.22	52.13	256.5	85.42	83.59	33.21	35.13	5.8%	33.63	122.10	61.62	59.85	0.837	0.033	3.7	nd	nd	nd	nd	nd	45.15	34.83	58.91	bl
05/21/08	9:02	7579.01	7.73	5.75	7.61	51.52	53.82	52.09	241.2	86.17	83.89	33.18	34.83	5.0%	33.59	114.50	62.19	60.13	1.445	0.032	3.5	nd	4.7	0.52	nd	nd	45.13	34.28	59.38	bl
05/22/08	9:09	7603.13	7.75	5.72	7.59	51.61	53.71	52.16	244.7	86.17	83.69	33.24	34.75	4.5%	33.64	116.30	62.21	59.93	3.365	0.032	3.5	nd	nd	nd	nd	nd	45.15	33.96	59.94	bl
05/23/08	10:04	7622.64	7.66	5.63	7.53	51.49	54.18	52.26	234.1	86.04	84.07	33.15	35.08	5.8%	33.72	111.00	62.08	60.28	1.421	0.051	4.4	nd	4.6	0.50	7.9	70/75	45.13	34.51	63.38	bl
05/28/08	9:26	7645.06	7.84	5.61	7.68	51.44	53.88	52.01	259.5	85.32	83.28	33.13	34.87	5.3%	33.54	123.60	61.47	59.57	0.493	0.078	4.7	nd	6.1	0.63	5.8	70/75	45.15	34.54	62.09	bl
05/29/08	9:31	7667.17	7.78	5.69	7.62	51.37	53.89	52.08	244.9	85.54	83.61	33.06	34.86	5.4%	33.59	116.40	61.56	59.85	0.502	0.051	4.1	nd	nd	nd	21.8	70/75	45.12	34.63	65.85	bl

Water Quality Data

TIME			pH			CONDUCTIVITY						TDS							TURBIDITY		SDI	BORON			OTHER					
				pH				Conductivity (mS/cm)							TDS (mg/L)				Turbidity (NTU)		Density Index		Boron (mg/L)			Inhibitor Pump			FEED VFD	
Date MM/DD/YY	Time hh:mm	Operation Time hh.hh	$pH_{F\text{-}sys}$ SC5	$pH_{P\text{-}sys}$ SC11	$pH_{C\text{-}sys}$ SC6	$C_{CF\text{-}out}$ SC3	$C_{F\text{-}PX\text{-}out}$ SC4	$C_{F\text{-}sys}$ SC5	$C_{P\text{-}sys}$ SC11	$C_{C\text{-}sys}$ SC6	$C_{C\text{-}PX\text{-}out}$ SC7	$TDS_{CF\text{-}out}$ SC3	$TDS_{F\text{-}PX\text{-}out}$ SC4	PX % Inc	$TDS_{F\text{-}sys}$ SC5	$TDS_{P\text{-}sys}$ SC11	$TDS_{C\text{-}sys}$ SC6	$TDS_{C\text{-}PX\text{-}out}$ SC7	$NTU_{MF\text{-}in}$ CART	$NTU_{CF\text{-}out}$ meter	$SDI_{CF\text{-}out}$ CART	$B_{CF\text{-}out}$ SC3	$B_{F\text{-}sys}$ SC5	$B_{P\text{-}sys}$ SC11	V_{TANK} (gallons)	Pump Speed (gph)	HP VFD Speed (Hertz)	PX VFD Speed (Hertz)	VFD Speed (Hertz)	Notes
05/30/08	10:03	7689.77	7.76	5.75	7.63	51.47	53.94	52.21	249.1	85.67	83.61	33.13	34.91	5.4%	33.68	118.50	61.73	59.87	0.566	0.058	4.2	nd	4.8	0.56	19.1	70/75	45.15	34.51	62.31	bl
												12 Point flux and recovery Period																		
06/03/08	10:58	7716.35	7.64	5.63	7.54	51.41	55.32	52.47	305	86.59	84.08	33.05	36.01	9.0%	33.86	145.60	62.59	60.32	0.449	0.044	3.9	nd	nd	nd	16.6	70/75	36.50	28.39	54.92	bl
06/04/08	9:16	7738.66	7.68	5.58	7.55	51.63	54.53	52.37	310.4	90.21	83.36	33.26	35.36	6.3%	33.79	148.40	65.84	59.64	0.868	0.046	4.1	nd	4.7	0.66	14.5	70/75	36.53	25.66	57.69	bl
06/05/08	9:20	7760.77	7.69	5.63	7.53	51.49	54.86	52.34	335.1	93.16	85.64	33.17	35.66	7.5%	33.78	160.40	68.49	61.69	1.154	0.046	4.2	nd	nd	nd	12.4	70/75	36.18	23.67	54.59	bl
06/06/08	9:17	7784.73	7.71	5.66	7.61	51.59	53.96	52.23	239.4	86.04	84.04	33.23	35.08	5.6%	33.68	113.60	62.07	60.24	0.826	0.048	4.7	nd	5.0	0.55	10.4	70/75	45.06	34.39	63.02	bl
06/10/08	9:30	7809.31	7.96	6.02	7.78	51.61	54.41	52.28	323.1	89.62	87.02	33.27	35.31	6.1%	33.76	154.60	65.32	62.94	0.624	0.064	4.8	nd	4.9	0.69	8.1	70/75	45.03	30.50	59.11	bl
06/11/08	10:37	7832.48	7.93	5.94	7.73	51.41	53.77	52.02	329.9	93.95	88.86	33.11	34.78	5.0%	33.56	157.80	69.21	64.58	0.891	0.060	4.6	nd	4.8	0.71	6	70/75	45.03	27.25	58.33	bl
06/12/08	10:10	7856.03	7.94	5.82	7.83	51.39	55.57	52.51	239.2	86.78	85.84	33.09	36.24	9.5%	33.88	113.60	62.79	61.91	0.815	0.048	4.6	nd	4.8	0.56	24	70/75	54.23	40.66	66.00	bl
06/24/08	9:15	8000.16	7.79	5.73	7.64	51.31	53.95	52.05	234.2	85.39	83.71	33.04	34.91	5.7%	33.58	111.10	61.51	59.94	0.858	0.072	4.6	nd	5.1	0.57	10.3	70/75	54.11	40.78	65.81	bl
06/13/08	10:09	7878.48	8.06	6.05	7.87	51.65	54.21	52.31	262	90.74	88.57	33.29	35.21	5.8%	33.76	124.70	60.39	64.34	0.918	0.055	4.6	nd	4.8	0.58	21.7	70/75	54.29	35.36	66.00	bl
06/17/08	13:25	7908.16	7.83	5.80	7.60	50.35	54	51.2	266.8	93.44	90.64	32.42	34.95	7.8%	32.97	127.10	68.76	66.27	0.588	0.043	2	nd	4.8	0.61	19	70/75	54.29	31.58	65.20	bv
06/18/08	15:15	7932.03	7.75	4.96	7.60	50.25	53.82	51.02	203.5	83.38	82.62	32.14	34.79	8.2%	32.86	95.97	59.51	58.74	0.714	0.043	4.1	nd	4.6	0.49	17	70/75	60.00	45.08	66.00	bv
06/19/08	17:50	7956.59	7.85	5.21	7.66	50.08	52.62	50.7	230.6	86.62	84.78	32.16	33.95	5.6%	32.62	110.00	62.56	61.03	0.700	0.049	4.2	nd	4.7	0.55	14.5	70/75	60.00	39.64	66.00	bv
06/20/08	12:40	7975.25	7.97	6.77	7.71	50.01	52.85	50.72	257.3	92.05	88.76	32.11	34.10	6.2%	32.65	121.90	67.56	64.56	0.750	0.062	4.9	nd	4.6	0.59	12.5	70/75	60.00	34.10	66.00	bv
06/25/08	10:13	8023.37	7.92	6.01	7.75	51.24	53.67	51.89	281.4	85.23	83.18	32.99	34.69	5.2%	33.46	134.10	61.35	59.48	0.501	0.095	4.7	nd	4.6	0.66	8.1	70/75	45.18	34.48	61.39	bl
												Most Affordable Point (MAP) Period																		
06/27/08	9:25	8053.71	7.87	5.86	7.67	51.26	53.76	51.92	254.7	89.19	87.12	32.99	34.78	5.4%	33.49	121.10	64.96	63.03	0.509	0.031	2.7	nd	4.9	0.61	nd	nd	54.20	36.14	62.54	bl
06/30/08	9:59	8126.28	7.89	5.91	7.69	51.27	53.83	51.99	235.9	89.76	87.46	33.02	34.83	5.5%	33.53	112.10	65.47	63.35	0.741	0.031	1.9	nd	4.7	0.55	nd	nd	54.20	36.06	62.44	bl
07/08/08	9:36	8237.25	7.78	6.06	8.06	51.36	53.66	51.95	272.8	90.05	87.51	33.07	34.73	5.0%	33.51	130.10	65.74	63.39	0.812	0.033	2.8	nd	5.1	0.75	nd	nd	54.20	35.51	62.27	bl
07/09/08	9:56	8261.59	7.96	6.09	7.81	51.39	53.31	51.81	325	84.96	82.62	33.10	34.47	4.1%	33.42	155.50	61.16	58.97	0.577	0.035	2.8	nd	4.8	0.64	nd	nd	45.49	33.75	59.82	bl
DOW-FILMTEC - SW30XHR-400i high boron rejection												**Membrane Ripening Period**																		
09/24/08	4:16	8264.68	7.91	6.31	7.72	50.51	52.71	51.31	222.3	84.23	82.01	32.69	33.98	3.9%	33.04	104.40	60.43	58.41	1.376	0.039	2.4				nd	nd	45.81	32.69	53.48	bl
09/25/08	10:09	8282.48	7.86	6.11	7.67	50.81	53.65	51.58	189.6	83.84	82.26	32.66	34.69	6.2%	33.23	89.84	60.09	58.65	0.941	0.038	2.5				nd	nd	45.78	33.96	53.51	bl
09/26/08	9:59	8306.32	7.82	5.93	7.65	50.67	53.59	51.54	179.4	83.61	82.19	32.58	34.64	6.3%	33.18	84.87	59.87	58.57	0.542	0.035	2.2				nd	nd	45.76	34.01	53.48	bl
09/29/08	15:43	8330.41	7.81	6.08	7.67	50.42	53.49	51.71	205.4	83.15	81.83	32.16	34.15	6.2%	33.06	97.20	59.01	57.72	0.771	0.037	2				nd	nd	45.79	34.54	53.48	bl
09/30/08	12:50	8351.53	7.81	6.04	7.65	50.49	53.21	51.61	192.8	83.85	81.98	32.44	34.33	5.8%	33.23	91.11	60.05	58.37	0.765	0.036	2.2				nd	nd	45.76	33.72	53.79	bl
10/07/08	8:17	8392.12	7.92	6.21	7.73	51.02	53.24	51.74	251	84.16	82.29	32.84	34.41	4.8%	33.35	119.50	60.39	58.66	0.985	0.038	1.2				nd	nd	45.82	33.19	53.68	bl
10/08/08	9:52	8416.18	7.84	6.21	7.67	50.71	53.45	51.62	243.7	83.78	82.13	32.57	34.53	6.0%	33.25	115.70	60.01	58.53	0.805	0.039	1.6				nd	nd	45.79	34.01	53.83	bl
10/16/08	9:11	8436.28	7.81	5.95	7.62	50.78	53.22	51.79	218.5	83.91	81.83	32.64	34.36	5.3%	33.38	103.60	60.18	58.22	0.752	0.030	1.8				nd	nd	45.62	33.63	53.88	bl
10/17/08	9:57	8461.04	7.82	5.97	7.66	50.94	53.25	51.89	218.3	84.29	82.26	32.78	34.41	5.0%	33.45	103.40	60.49	58.64	0.753	0.029	2.1				nd	nd	45.62	33.34	53.92	bl
10/20/08	9:50	8532.30	7.84	5.98	7.64	50.98	53.38	51.84	207.1	84.28	82.51	32.81	34.51	5.2%	33.42	98.16	60.52	58.86	0.720	0.029	2.3				nd	nd	45.38	33.39	54.01	bl
10/21/08	9:52	8556.95	7.91	6.23	7.72	51.07	53.41	51.96	222.5	84.45	82.68	32.86	34.56	5.2%	33.51	105.50	60.71	59.03	0.763	0.029	2.4				nd	nd	45.38	33.32	53.92	bl
10/22/08	10:11	8578.15	7.84	6.11	7.69	50.93	53.12	51.83	249.2	84.48	82.48	32.66	34.28	5.0%	33.39	118.40	60.58	58.63	0.532	0.026	1.9				nd	nd	45.36	32.75	53.97	bl
10/23/08	9:30	8601.45	7.86	6.09	7.71	51.05	53.09	51.99	243.7	84.55	82.19	32.85	34.30	4.4%	33.52	115.80	60.72	58.57	0.971	0.029	2.3				nd	nd	45.39	32.78	54.42	bl
10/24/08	11:37	8627.60	7.89	6.14	7.74	50.79	53.17	51.89	243.4	84.54	82.43	32.66	34.33	5.1%	33.44	115.40	60.72	58.78	0.673	0.029	1.9				nd	nd	45.38	32.84	54.32	bl
10/27/08	10:39	8698.61	7.83	6.13	7.67	51.38	53.32	52.11	242.1	84.39	82.16	33.11	34.48	4.1%	33.63	115.00	60.69	58.56	0.799	0.029	2.6				nd	nd	45.41	32.72	53.91	bl
10/28/08	9:35	8721.54	7.85	6.28	7.68	51.25	54.15	52.34	289.9	85.21	82.92	33.02	35.08	6.2%	33.78	138.40	61.32	59.27	0.801	0.029	2.4				nd	nd	36.45	27.41	50.91	bl
10/29/08	10:00	8745.97	7.83	6.25	7.64	50.97	55.03	52.57	301.4	89.17	86.29	32.81	35.79	9.1%	33.94	144.10	64.89	62.29	0.737	0.027	2.1				nd	nd	36.45	23.98	50.02	bl
11/22/08	10:34	9203.95	7.87	6.07	7.67	50.88	53.61	52.03	305.4	90.32	82.12	32.72	34.66	5.9%	33.56	145.70	65.97	58.54	0.858	0.027	2.5				nd	nd	36.88	22.62	56.33	bl
10/31/08	10:34	8791.25	7.86	6.27	7.69	50.81	53.11	51.67	242.1	84.68	82.48	32.68	34.30	5.0%	33.31	115.10	60.82	58.86	0.926	0.027	3.1				nd	nd	45.12	32.37	54.28	bl
11/03/08	10:24	8864.08	7.85	6.15	7.65	50.91	53.79	51.91	238.1	89.16	86.43	32.76	34.81	6.3%	33.49	113.10	64.92	62.43	1.956	0.029	2.2				nd	nd	45.41	28.98	54.25	bl
11/21/08	10:43	9180.09	7.89	5.95	7.67	50.94	54.06	52.16	228.8	87.26	85.05	32.78	34.99	6.7%	33.62	108.20	63.18	61.14	0.536	0.026	2.8				nd	nd	45.76	30.91	58.41	bl
11/05/08	10:29	8912.18	7.86	6.02	7.68	50.81	52.65	51.46	171.4	83.71	81.76	32.68	34.01	4.1%	33.16	80.97	60.04	58.18	1.573	0.026	2.2				nd	nd	54.64	39.67	59.97	bl
11/06/08	9:44	8931.89	7.83	5.83	7.62	50.68	53.49	51.87	178.5	88.74	86.82	32.61	34.57	6.0%	33.42	84.32	64.55	62.72	1.387	0.027	2.2				nd	nd	54.64	34.58	58.63	bl
11/19/08	10:55	9143.56	7.88	5.91	7.64	51.06	54.56	52.17	198.7	88.57	87.27	32.87	35.42	7.8%	33.66	94.09	64.41	63.14	1.062	0.027	2.6				nd	nd	54.91	34.39	60.97	bl
11/11/08	10:38	9019.56	7.85	5.61	7.58	50.97	53.68	52.02	148	83.52	82.59	32.79	34.75	6.0%	33.55	69.90	59.86	58.92	1.295	0.027	3.1				nd	nd	60.00	44.88	65.70	bl
11/14/08	9:59	9065.09	7.77	5.67	7.56	50.51	52.86	51.51	159.4	88.07	86.09	32.41	34.07	5.1%	33.17	75.38	63.76	61.86	1.105	0.027	3				nd	nd	60.00	38.31	63.61	bl
11/17/08	14:07	9120.17	7.91	5.86	7.69	50.68	53.39	51.91	191.6	93.22	90.94	32.52	34.47	6.0%	33.41	90.31	68.46	66.36	1.085	0.033	2.8				nd	nd	60.00	33.78	62.91	bl

TIME			CALCULATED PARAMETERS			TEMP	PRESSURES										FLOWS				MAIN PANEL KW METER				VFD KW METER			
		Operation	RO	Flux	Power		P_{MF-in}	P_{MF-out}	P_{CF-in}	P_{CF-out}	$P_{PX-Feed\ In}$	$P_{PX-conc\ out}$	$P_{PX-boost\ suct}$	P_{F-SYS}	P_{C-SYS}	P_{P-SYS}	$Q_{F-HP\ Pump}$	$Q_{PX\ Pump}$	$Q_{Feed\ PX-In}$	Q_{P-SYS}	A_{sys}	P HP/PX	P booster	Power	PX power	HP Power	Feed Pump	
Date	Time	Time	Recovery %	Gfd	kWh/m3	Influent	(psi)	(psi)	(psi)	(psi)	(psi)	(psi)	(psi)	(psi)	(psi)	(psi)	(gpm)	(gpm)	(gpm)	(gpm)	amp	(kw)	(kw)	Factor	(kw)	(kw)	(kw)	Notes
MM/DD/YY	hh:mm	hh.hh				Temp F	1	2	3	4	5	6	7	8	9	10	11	12	13	14	15	16	17	18	19	20	21	
Toray membranes - TM800E-400										**Membrane Ripening Period**																		
5/30/2007	11:15	4151.28	42.3%	7.47	1.90	57.0	51.2	39.4	38.8	33.9	34.7	27.7	800	818	808	2.9	44.0	57.95	59.56	43.6	25.00	18.85	nd	0.900	0.90	17.00	5.00	
6/5/2007	11:30	4198.44	43.0%	7.46	1.87	58.0	51.2	38.4	37.8	32.9	34.0	27.1	790	807	798	2.5	44.0	57.60	57.60	43.5	24.50	18.48	nd	0.900	0.85	16.50	4.95	
6/6/2007	10:15	4218.73	42.6%	7.47	1.90	58.0	51.1	40.5	39.8	38.6	35.6	28.6	790	807	800	2.7	44.0	58.24	58.75	43.6	24.40	18.80	nd	0.900	0.85	16.50	4.93	bl
6/7/2007	9:25	4239.52	42.6%	7.46	1.87	58.0	51.2	40.7	40.0	38.8	33.7	27.1	795	815	802	2.5	43.5	57.80	58.70	43.5	24.40	18.50	nd	0.900	0.85	16.60	4.93	bl
6/11/2007	11:45	4256.49	43.1%	7.49	1.84	59.8	51.0	43.8	43.3	36.5	36.0	30.0	785	800	790	2.8	41.2	57.53	57.75	43.7	24.00	18.22	nd	0.898	0.90	16.30	4.90	jm
6/12/2007	9:30	4278.07	42.5%	7.47	1.87	60.0	51.0	22.4	21.9	20.5	15.5	9.7	780	795	785	2.5	42.5	57.50	59.10	43.6	24.50	18.55	nd	0.898	0.90	16.60	4.91	bl
6/13/2007	11:45	4299.24	42.7%	7.49	1.84	61.0	50.5	29.0	28.0	23.8	23.0	15.0	780	800	790	2.4	43.0	57.47	58.76	43.7	24.50	18.24	nd	0.900	0.90	16.30	4.95	bv
6/14/2007	9:00	4316.67	42.8%	7.47	1.82	62.0	50.8	39.0	38.0	32.5	32.0	25.5	770	795	790	2.4	43.5	57.66	58.32	43.6	23.80	18.06	nd	0.899	0.90	16.30	4.95	bv
										12 Point flux and Recovery Period																		
6/19/2007	10:12	4341.84	42.5%	6.00	1.71	62.0	53.9	42.3	42.0	40.9	39.8	34.7	735	745	742	2.2	35.5	45.70	47.27	35.0	19.75	13.57	nd	0.842	0.50	12.10	4.65	bl
6/20/2007	10:10	4364.19	46.4%	6.00	1.78	61.5	54.0	44.2	43.9	43.0	41.9	38.4	780	790	785	1.3	32.8	39.68	40.39	35.0	19.80	14.15	nd	0.840	0.35	12.60	4.55	bl px out tds high. re-run point on 6-21
06/21/07	9:45	4386.12	47.0%	5.98	1.77	60.5	54.4	47.8	47.3	46.2	45.0	40.9	775	782	778	1.2	35.5	39.43	44.53	34.9	19.75	14.05	nd	0.845	0.29	12.60	4.59	bl Unbalanced PX to compensate low flo
06/22/07	10:20	4410.71	50.1%	5.98	1.85	62.0	54.5	39.5	39.0	38.1	36.9	33.3	808	819	815	0.9	36.0	34.71	40.95	34.9	20.44	14.68	nd	0.862	0.29	13.50	4.55	bl Unbalanced PX to compensate low flo
06/26/07	10:20	4432.57	41.8%	7.47	1.82	63.0	50.4	32.9	32.1	30.2	27.4	19.0	759	779	770	1.9	44.5	59.28	60.74	43.6	23.85	18.01	nd	0.900	0.95	15.19	4.95	bl
06/27/07	9:50	4454.19	45.8%	7.47	1.87	64.0	52.0	36.9	36.1	34.5	33.0	27.4	804	819	811	1.9	44.5	50.18	51.65	43.6	23.25	18.51	nd	0.902	0.61	16.90	4.83	bl
06/28/07	9:10	4475.80	49.4%	7.42	1.92	64.5	52.8	39.1	38.5	37.0	33.5	29.1	835	847	840	1.9	44.0	44.31	47.23	43.3	24.73	18.84	nd	0.902	0.48	17.35	4.75	bl Unbalanced PX to compensate low flo
06/29/07	9:55	4497.25	43.3%	8.91	1.95	65.0	47.5	29.5	28.3	25.8	23.8	14.1	805	832	819	3.1	51.5	68.02	68.10	52.0	29.92	23.04	nd	0.921	1.37	20.50	5.17	bl
07/03/07	nd	4520.51	45.9%	8.97	1.93	65.0	48.8	34.6	32.7	30.2	28.1	20.0	830	855	840	3.3	51.7	60.03	61.70	52.3	29.90	22.92	nd	0.918	0.97	20.90	5.11	bl
07/05/07	nd	4527.09	49.7%	8.97	1.98	65.5	50.0	43.3	42.5	40.2	38.6	33.0	880	890	885	3.3	51.7	52.55	52.92	52.3	30.40	23.47	nd	0.920	1.00	21.60	5.00	bv
07/06/07	nd	4532.36	43.4%	9.91	1.98	64.0	44.0	32.0	30.5	27.5	24.5	13.0	820	850	840	4.5	58.0	77.44	75.38	57.8	33.60	26.05	nd	0.922	1.80	24.10	5.40	bv
07/09/07	nd	4536.59	46.0%	9.98	2.01	62.5	46.5	37.0	35.8	32.8	29.7	21.0	857	883	870	4.0	56.5	67.31	68.44	58.2	34.60	26.53	nd	0.930	1.45	25.10	5.37	bl
07/10/07	nd	4543.50	50.3%	9.93	2.06	64.0	47.0	35.0	34.0	28.0	29.5	22.8	910	930	920	4.3	58.0	57.62	57.25	57.9	35.05	27.15	nd	0.922	0.90	26.10	5.20	bv
										Most Affordable Point (MAP)																		
07/24/07	17:15	4564.69	50.4%	9.00	2.12	66.0	47.5	34.0	33.0	27.0	29.5	24.0	930	950	940	3.6	52.0	51.56	51.72	52.5	32.75	25.28	nd	0.922	0.7	23.5	4.7	bv
07/26/07	16:45	4591.27	50.2%	9.00	2.10	67.0	49.0	34.0	32.5	27.0	29.0	23.5	925	940	930	3.5	52.0	50.51	52.10	52.5	32.61	25.04	nd	0.925	0.7	23.3	4.9	bv
07/27/07	15:10	4607.91	50.6%	9.00	2.13	66.0	55.5	33.0	32.5	30.0	28.0	22.5	930	950	940	3.25	52.0	51.93	51.25	52.5	33.03	25.35	nd	0.923	0.8	23.5	5.8	bv
08/07/07	9:23	4637.68	50.3%	8.95	2.12	66.0	58.2	33.9	32.9	30.9	29.5	23.9	924	940	935	3.3	51.0	50.93	51.52	52.2	32.74	25.09	nd	0.921	0.65	23.2	6.05	bl
08/08/07	9:15	4658.32	50.3%	8.98	2.15	63.0	53.2	33.7	33.0	30.6	29.1	23.8	941	957	948	3.25	51.5	50.67	51.71	52.4	33.25	25.55	nd	0.921	0.66	23.7	5.39	bl
08/09/07	9:10	4680.36	50.3%	8.97	2.15	63.0	57.8	33.8	33.0	27.3	28.5	23.1	945	959	945	3.25	51.0	50.78	51.65	52.3	33.32	25.59	nd	0.92	0.65	23.75	6	bl
08/10/07	9:13	4701.86	50.4%	8.98	2.14	64.0	52.4	33.2	32.9	30.5	27.0	22.5	943	959	946	3.25	51.5	51.08	51.60	52.4	32.97	25.51	nd	0.922	0.65	23.63	5.3	bl
08/14/07	1:48	4721.01	50.2%	8.97	2.10	66.0	49.8	33.2	32.4	30.1	29.0	23.3	925	941	933	2.8	51.0	50.55	51.90	52.3	32.13	24.98	nd	0.926	0.66	23.19	5.07	bl
08/15/07	9:48	4739.81	50.1%	8.97	2.13	64.0	51.5	33.8	33.0	30.6	29.2	23.8	940	955	945	3.25	51.5	51.59	52.15	52.3	33.15	25.31	nd	0.925	0.65	23.49	5.15	bl
08/16/07	8:31	4761.17	50.2%	8.97	2.16	62.5	51.5	34.0	33.2	27.2	28.8	23.4	950	965	960	3.5	51.5	50.85	51.93	52.3	33.27	25.66	nd	0.924	0.68	23.84	5.15	bl
08/17/07	9:25	4784.47	50.2%	8.95	2.17	62.5	51.1	33.4	32.9	27.0	26.9	22.3	955	968	961	3.25	52.0	50.83	51.85	52.2	33.31	25.74	nd	0.923	0.67	23.9	5.12	bl
			MAP Average		2.12																							
			MAP Maximum		2.17																							
			MAP Minimum		1.98																							
Koch membranes - TFC 2822HF-400										**Membrane Ripening Period**																		
08/22/07	9:10	4805.09	42.3%	7.47	1.78	64.0	48.0	33.8	32.9	27.1	29.2	21.9	736	759	745	2.2	44.0	57.86	59.58	43.6	23.27	17.58	nd	0.899	0.95	15.6	4.68	bl
08/23/07	9:10	4827.55	42.5%	7.51	1.77	64.0	49.1	33.9	33.1	30.8	29.2	21.9	739	762	749	2.2	44.0	57.76	59.14	43.8	23.31	17.62	nd	0.900	0.95	15.6	4.81	bl
08/24/07	9:50	4850.52	42.4%	7.51	1.76	64.0	48.1	33.9	33.2	30.7	29.3	22.1	738	759	747	2.2	44.0	57.74	59.54	43.8	23.12	17.54	nd	0.897	0.95	15.6	4.65	bl
08/27/07	1:15	4856.07	42.6%	7.53	1.75	62.0	40.1	33.7	32.7	27.0	29.1	21.9	737	758	744	1.9	44.5	57.62	59.23	43.9	23.09	17.44	nd	0.903	0.94	15.6	3.77	bl
08/28/07	8:35	4875.27	42.6%	7.53	1.76	61.0	48.5	34.0	33.2	30.7	29.7	22.0	740	760	750	2.6	44.0	56.62	59.14	43.9	23.45	17.53	nd	0.900	0.95	15.6	4.70	bV
08/29/07	14:30	4903.54	42.7%	7.53	1.76	60.0	47.5	33.5	33.0	30.5	29.0	22.0	750	770	755	2.1	44.0	56.12	59.03	43.9	23.29	17.57	nd	0.901	0.95	15.7	4.80	bv
08/30/07	8:25	4919.93	42.5%	7.51	1.78	59.9	43.5	34.0	33.2	30.8	29.7	22.0	750	770	760	2.5	44.0	57.35	59.16	43.8	23.29	17.68	nd	0.902	0.95	15.8	4.10	bv
08/31/07	10:10	4942.55	42.6%	7.51	1.78	59.9	44.8	34.0	33.2	30.8	29.7	22.2	755	775	765	2.5	44.0	57.87	58.95	43.8	23.47	17.72	nd	0.902	0.95	15.8	4.25	bv
09/05/07	2:15	4977.24	42.3%	7.51	1.76	62.0	47.9	33.6	32.7	27.0	29.1	21.9	739	758	745	1.9	44.1	58.21	59.82	43.8	23.18	17.46	nd	0.902	1.04	15.5	4.05	bl
09/06/07	9:05	4994.49	42.5%	7.53	1.76	60.0	43.0	34.1	33.2	27.2	29.3	22.1	737	760	746	2.3	44.5	58.34	59.35	43.9	23.30	17.57	nd	0.905	1.05	15.6	4.05	bl
09/07/07	9:55	5019.27	42.3%	7.53	1.73	62.0	57.0	34.5	33.5	30.8	29.8	22.2	738	750	740	2.5	44.5	58.98	59.86	43.9	23.36	17.29	nd	0.898	1.00	15.3	5.90	bv
										12 Point flux and Recovery Period																		
09/11/07	13:00	5044.4	42.9%	5.98	1.67	62.0	42.0	32.0	31.5	30.0	29.8	25.0	710	725	720	1.1	35.0	44.54	46.50	34.9	18.47	13.23	nd	0.852	0.55	11.8	3.30	bv
09/12/07	16:15	5071.67	45.7%	5.98	1.72	61.8	48.0	32.0	31.5	30.0	29.8	26.0	750	760	755	1.1	35.0	38.86	41.39	34.9	18.59	13.63	nd	0.853	0.40	12.1	3.85	bv px out tds high.
10/03/07	9:35	5269.17	46.9%	5.98	1.67	62.0	49.5	32.8	32.2	30.5	30.0	25.7	730	740	735	1.5	35.0	39.58	46.02	34.9	18.69	13.20	nd	0.845	0.45	12.0	4.15	bv
09/13/07	15:45	5093.8	50.3%	5.98	1.82	60.0	38.0	32.0	31.5	30.0	29.8	27.0	800	810	805	1.1	35.0	32.29	34.47	34.9	19.78	14.44	nd	0.859	0.30	12.9	2.80	bv px out tds high.
10/19/07	9:20	5438.31	42.5%	7.47	1.79	58.0	58.9	29.0	28.2	25.3	23.9	16.9	745	767	759	2.7	44.5	57.81	58.92	43.6	23.38	17.76	nd	0.899	1.05	15.7	6.05	bl

TIME			CALCULATED PARAMETERS			TEMP	PRESSURES										FLOWS				MAIN PANEL KW METER				VFD KW METER			
		Operation	RO	Flux	Power		P_{MF-in}	P_{MF-out}	P_{CF-in}	P_{CF-out}	$P_{PX-Feed\ In}$	$P_{PX-conc\ out}$	$P_{PX-boost\ suct}$	P_{F-SYS}	P_{C-SYS}	P_{P-SYS}	$Q_{F-HP\ Pump}$	$Q_{PX\ Pump}$	$Q_{Feed\ PX-In}$	Q_{P-SYS}	A_{sys}	P HP/PX	P booster	Power	PX power	HP Power	Feed Pump	
Date	Time	Time	Recovery %	Gfd	kWh/m3	Influent	(psi)	(psi)	(psi)	(psi)	(psi)	(psi)	(psi)	(psi)	(psi)	(psi)	(gpm)	(gpm)	(gpm)	(gpm)	amp	(kw)	(kw)	Factor	(kw)	(kw)	(kw)	Notes
MM/DD/YY	hh:mm	hh.hh				Temp F	1	2	3	4	5	6	7	8	9	10	11	12	13	14	15	16	17	18	19	20	21	
10/10/07	14:00	5303.19	42.6%	7.54	1.77	59.0	41.4	34.2	33.3	27.0	29.4	22.0	739	759	725	3.2	44.5	57.62	59.36	44.0	23.51	17.68	nd	0.905	1.07	15.7	4.95	bl
10/11/07	8:35	5321.8	42.6%	7.53	1.77	58.0	49.3	35.0	34.1	27.8	29.8	22.6	742	762	751	3.1	44.5	57.99	59.16	43.9	23.23	17.61	nd	0.903	0.95	15.7	4.88	bl
10/18/07	9:35	5414.55	42.7%	7.53	1.77	58.0	47.1	35.1	34.1	27.8	29.8	22.1	741	764	751	2.8	44.5	57.86	59.03	43.9	23.48	17.67	nd	0.894	1.05	15.7	4.45	bl
10/02/07	8:25	5244.08	42.9%	7.54	1.74	61.0	46.8	34.8	34.0	31.0	29.9	22.6	735	755	750	3.1	44.0	57.13	58.53	44.0	22.82	17.35	nd	0.901	0.95	15.6	4.45	bv
09/14/07	16:35	5107.02	43.2%	7.51	1.77	60.0	46.0	34.0	33.0	30.5	29.0	22.0	750	765	760	2.2	44.0	57.32	57.55	43.8	23.06	17.58	nd	0.902	0.95	15.8	4.50	bv
09/17/07	14:40	5113.22	45.8%	7.51	1.79	60.0	39.0	33.2	32.7	30.4	29.3	23.7	767	784	778	2.2	44.5	49.68	51.84	43.8	23.31	17.79	nd	0.905	0.95	16.2	3.39	bl
10/04/07	16:00	5295.92	47.2%	7.51	1.80	63.0	50.0	33.0	32.5	30.0	29.5	24.0	795	810	800	2.1	44.0	43.06	47.48	43.8	23.57	17.92	nd	0.905	0.55	16.4	4.75	bv
09/18/07	9:00	5131.54	49.9%	7.47	1.88	62.0	45.0	33.1	32.5	27.1	29.7	25.3	820	835	825	2.4	44.5	42.41	43.85	43.6	24.65	18.57	nd	0.907	0.50	17.2	3.82	bl
09/19/07	12:15	5150.03	42.3%	8.93	1.82	63.0	49.6	35.9	34.9	27.8	29.5	19.6	759	785	768	3.6	52.0	69.56	70.98	52.1	28.52	21.58	nd	0.916	1.60	19.1	5.71	bl
09/20/07	9:26	5169.9	45.8%	8.95	1.86	62.0	48.2	35.1	34.2	27.6	29.6	21.8	798	822	805	3.6	52.0	60.16	61.85	52.2	28.64	22.05	nd	0.920	1.10	19.9	5.16	bl
09/21/07	11:13	5194.13	50.1%	8.90	1.93	63.0	48.3	34.1	33.3	26.9	29.4	23.8	845	864	855	3.4	52.0	50.22	51.77	51.9	29.64	22.79	nd	0.922	0.90	21.1	4.88	bl
10/17/07	9:00	5392.24	42.2%	9.98	1.89	58.5	52.3	32.1	30.7	23.1	23.7	11.9	788	831	805	5.1	57.5	77.42	79.64	58.2	33.30	24.95	nd	0.926	2.34	23.4	6.65	bl re-run point to avoid FWF water quali
09/25/07	14:08	5204.98	42.7%	9.98	1.89	65.0	49.5	36.7	35.3	27.1	29.1	16.9	768	805	785	4.3	57.0	77.36	77.97	58.2	32.80	25.01	nd	0.933	2.25	22.8	6.35	bl
10/16/07	14:30	5375.55	45.8%	9.96	1.97	60.0	54.1	30.2	29.1	22.2	23.4	14.9	829	863	843	4.3	58.0	66.68	68.78	58.1	33.81	25.95	nd	0.934	1.66	24.5	6.53	bl re-run point to avoid FWF water quali
09/26/07	17:00	5212.75	46.3%	9.98	1.89	65.0	52.0	35.5	34.2	30.8	29.0	20.0	810	840	825	4.2	57.0	66.96	67.62	58.2	32.50	25.03	nd	0.925	1.60	23.3	6.3	bv
10/11/07	14:00	5325.75	49.6%	10.01	2.00	59.0	43.2	35.8	34.5	27.2	29.4	22.2	874	899	882	4.7	58.0	56.62	59.37	58.4	34.64	26.59	nd	0.930	1.07	25.7	4.68	bl re-run point to avoid FWF water quali
10/12/07	9:08	5344.85	49.7%	9.98	2.03	59.0	55.9	35.8	34.7	27.6	29.5	22.4	877	900	885	4.8	58.0	56.75	58.99	58.2	34.78	26.78	nd	0.927	1.08	25.8	6.37	bl re-run point to avoid FWF water quali
09/27/07	15:50	5221.39	50.7%	9.99	1.96	65.0	54.8	34.8	33.5	30.5	29.2	22.3	860	885	875	4.2	57.0	55.57	56.60	58.3	33.76	25.91	nd	0.928	0.95	25.1	6.15	bv
										Most Affordable Point (MAP) Period																		
10/30/07	14:49	5470.29	44.7%	9.00	1.88	60.0	49.6	35.8	34.8	27.9	29.8	20.9	795	822	804	3.7	52.5	59.86	64.84	52.5	28.78	22.37	nd	0.922	1.25	20.1	5.4	bl
10/31/07	10:19	5487.88	44.9%	9.02	1.89	60.0	48.1	36.0	34.9	27.9	29.7	21.2	798	823	806	3.8	52.5	59.91	64.62	52.6	29.23	22.52	nd	0.922	1.27	20.2	5.21	bl
11/01/07	10:16	5510.05	45.5%	8.98	1.87	60.5	48.3	35.8	34.8	27.2	29.7	21.4	795	822	804	3.8	52.5	59.61	62.71	52.4	28.81	22.21	nd	0.921	1.23	20.0	5.13	bl
11/02/07	10:13	5532.28	45.6%	8.98	1.86	61.0	47.9	35.9	34.8	27.4	29.6	21.6	795	820	803	3.8	52.5	60.54	62.55	52.4	28.92	22.19	nd	0.919	1.25	19.9	5.1	bl
11/06/07	14:05	5556.71	46.1%	8.98	1.87	60.0	46.9	35.7	34.7	27.2	29.8	21.9	795	823	806	3.8	52.5	59.91	61.15	52.4	28.91	22.29	nd	0.922	1.21	20.2	4.95	bl
11/07/07	10:02	5574.64	46.2%	8.97	1.88	60.0	46.4	35.8	34.8	27.3	29.7	21.9	800	825	808	3.7	52.5	59.93	60.96	52.3	29.58	22.32	nd	0.922	1.25	20.1	4.7	bl
11/08/07	9:23	5596.15	45.4%	8.97	1.88	59.0	46.6	35.9	34.9	27.7	29.9	21.7	800	825	813	3.8	52.5	59.74	62.96	52.3	29.61	22.38	nd	0.923	1.24	20.2	4.78	bl
11/09/07	13:16	5621.67	45.1%	8.97	1.89	59.5	45.8	35.4	34.6	27.1	29.3	21.1	800	825	809	3.3	52.0	59.92	63.62	52.3	29.15	22.48	nd	0.919	1.30	20.1	4.87	bl
11/12/07	14:30	5625.97	45.3%	8.97	1.87	60.0	42.1	35.6	34.7	27.1	29.3	21.1	792	819	800	3.3	52.5	59.93	63.14	52.3	28.93	22.21	nd	0.922	1.33	20.0	4.41	bl
11/13/07	15:37	5651.08	45.3%	8.97	1.89	60.0	50.8	35.4	34.3	26.9	29.1	20.9	796	822	804	3.2	52.5	60.32	63.15	52.3	29.18	22.42	nd	0.917	1.36	20.0	5.59	bl
11/14/07	10:18	5668.07	45.2%	8.98	1.89	60.0	46.3	35.4	34.4	26.8	29.2	20.9	799	825	807	3.2	52.5	60.44	63.42	52.4	30.87	22.45	nd	0.924	1.38	20.1	5.05	bl
11/15/07	8:20	5688.28	45.1%	8.98	1.89	60.0	47.1	36.1	35.1	27.4	29.5	21.1	800	825	807	3.6	52.5	60.18	63.85	52.4	29.79	22.49	nd	0.924	1.37	20.2	5.1	bl
11/16/07	9:52	5712.08	45.3%	8.98	1.90	59.5	49.2	36.2	35.2	27.7	29.8	21.4	802	827	816	3.8	52.5	60.24	63.15	52.4	29.87	22.57	nd	0.923	1.33	20.2	5.42	bl
										Base Line Test																		
11/19/07	14:51	5717.84	42.3%	7.47	1.76	58.5	40.3	35.0	34.1	30.9	29.7	22.2	728	756	742	3.3	44.5	57.62	59.48	43.6	22.51	17.42	nd	0.903	1.15	15.4	3.77	bl
11/20/07	14:28	5741.45	42.8%	7.49	1.74	60.0	44.0	34.5	33.8	26.9	29.5	22.1	739	759	743	2.3	44.0	57.59	58.38	43.7	23.41	17.31	nd	0.904	1.05	15.4	4.39	bl
11/21/07	9:57	5760.93	42.6%	7.49	1.74	59.5	50.8	35.0	34.2	27.2	29.7	22.3	740	758	743	2.6	44.0	57.58	58.86	43.7	23.52	17.31	nd	0.903	1.05	15.4	5.14	bl
			MAP Average		1.88																							
			MAP Maximum		1.90																							
			MAP Minimum		1.86																							
Hydranautics membranes - SWC5										**Membrane Ripening Period**																		
11/28/07	14:45	5762.13	43.0%	7.51	1.79	60.0	40.0	34.4	33.5	26.8	29.0	22.2	760	775	770	2.4	44.2	57.54	58.12	43.8	24.02	17.80	nd	0.907	0.90	16.1	3.8	jm, hyd memb 1st point, ~1hr operation
11/29/07	15:10	5772.73	42.7%	7.47	1.79	59.0	42.0	34.8	33.8	30.5	29.8	22.2	770	785	780	2.5	44.0	57.84	58.43	43.6	23.65	17.72	nd	0.909	0.95	16.0	3.95	bv
11/30/07	14:20	5795.71	42.8%	7.47	1.79	58.0	48.0	35.0	34.2	30.8	29.5	23.5	770	785	778	2.5	44.0	57.04	58.31	43.6	23.64	17.72	nd	0.905	0.95	15.9	4.7	bv
12/03/07	16:10	5803.57	42.4%	7.51	1.77	57.0	42.0	35.5	34.8	31.2	30.0	22.5	765	780	775	3.0	44.0	56.82	59.47	43.8	23.39	17.65	nd	0.902	0.90	15.8	3.95	bl
12/04/07	9:24	5820.82	42.5%	7.49	1.79	56.5	46.4	35.6	34.8	27.8	29.9	22.7	762	780	773	3.1	44.0	57.44	59.12	43.7	23.73	17.73	nd	0.904	0.91	15.9	4.5	bl
12/05/07	8:24	5841.99	42.5%	7.49	1.79	57.5	46.3	35.2	34.7	27.6	29.9	22.4	761	782	775	2.9	44.0	57.74	59.22	43.7	23.41	17.78	nd	0.903	0.91	15.9	4.43	bl
12/06/07	9:15	5865.08	42.4%	7.49	1.78	58.0	46.1	35.6	34.8	27.4	29.9	22.4	759	779	770	2.9	44.0	57.62	59.34	43.7	23.42	17.68	nd	0.904	0.95	15.9	4.45	bl
12/07/07	8:30	5886.31	42.2%	7.51	1.78	58.0	47.8	35.7	35.0	27.8	29.9	22.7	760	780	772	3.1	44.0	57.26	59.96	43.8	23.42	17.66	nd	0.901	0.91	15.9	4.63	bl
12/10/07	15:44	5893.76	42.4%	7.49	1.77	56.5	41.8	35.2	34.4	27.1	29.9	22.2	760	777	765	2.6	44.0	57.13	59.25	43.7	23.31	17.59	nd	0.902	0.92	15.8	3.95	bl
12/11/07	14:45	5916.77	42.4%	7.49	1.78	57.0	47.1	35.3	34.6	27.2	29.9	22.3	760	780	770	2.6	44.0	57.14	59.45	43.7	23.42	17.63	nd	0.903	0.93	15.9	4.64	bl
12/12/07	9:59	5934.33	42.5%	7.51	1.78	56.5	44.9	35.9	35.1	27.9	30.1	22.9	762	782	772	3.2	44.0	58.21	59.36	43.8	23.61	17.69	nd	0.903	0.91	15.9	4.23	bl
12/13/07	9:20	5957.51	42.4%	7.51	1.79	55.5	48.9	36.2	35.6	28.2	30.1	23.0	762	782	775	4.3	44.0	58.73	59.46	43.8	23.55	17.76	nd	0.904	0.92	15.9	4.77	bl
12/14/07	8:47	5979.06	42.4%	7.51	1.79	56.0	46.9	36.4	35.6	28.2	30.2	23.1	765	785	777	3.4	44.0	58.26	59.53	43.8	23.47	17.79	nd	0.899	0.91	15.9	4.3	bl
										12 Point flux and Recovery Period																		
01/04/08	10:15	6044.01	43.0%	5.97	1.70	56.5	47.1	32.9	32.3	27.3	30.1	25.0	722	738	733	1.8	35.5	46.14	49.32	34.8	18.91	13.42	nd	0.844	0.55	12.3	3.95	bl
01/08/08	13:28	6072.97	47.1%	6.00	1.78	56.5	39.1	32.1	31.8	27.1	30.0	26.6	765	779	773	1.6	36.0	39.29	45.53	35	19.11	14.14	nd	0.854	0.41	13.1	2.97	bl

TIME			CALCULATED PARAMETERS			TEMP	PRESSURES										FLOWS				MAIN PANEL KW METER				VFD KW METER			
		Operation	RO	Flux	Power		P_{MF-in}	P_{MF-out}	P_{CF-in}	P_{CF-out}	$P_{PX-Feed\ In}$	$P_{PX-conc\ out}$	$P_{PX-boost\ suct}$	P_{F-SYS}	P_{C-SYS}	P_{P-SYS}	$Q_{F-HP\ Pump}$	$Q_{PX\ Pump}$	$Q_{Feed\ PX-In}$	Q_{P-SYS}	A_{sys}	P HP/PX	P booster	Power	PX power	HP Power	Feed Pump	
Date	Time	Time	Recovery %	Gfd	kWh/m3	Influent	(psi)	(psi)	(psi)	(psi)	(psi)	(psi)	(psi)	(psi)	(psi)	(psi)	(gpm)	(gpm)	(gpm)	(gpm)	amp	(kw)	(kw)	Factor	(kw)	(kw)	(kw)	Notes
MM/DD/YY	hh:mm	hh.hh				Temp F	1	2	3	4	5	6	7	8	9	10	11	12	13	14	15	16	17	18	19	20	21	
01/09/08	14:40	6098.13	51.4%	5.97	1.84	56.0	43.5	32.5	32.0	30.8	29.0	26.0	800	810	805	1.7	35.0	32.92	44.74	34.8	19.89	14.53	nd	0.861	0.30	13.1	3.4	bv
01/10/08	9:15	6116.76	42.4%	7.51	1.80	56.0	53.6	34.9	33.9	28.0	30.1	22.6	762	779	769	3.3	44.0	57.44	59.56	43.8	23.62	17.88	nd	0.903	0.89	16.2	5.33	bl
01/11/08	10:05	6139.91	46.0%	7.49	1.86	56.0	41.2	33.7	33.0	32.4	29.9	24.1	801	818	805	3.1	44.5	50.01	51.33	43.7	24.17	18.41	nd	0.908	0.74	19.8	3.61	bl
01/15/08	9:51	6164.8	47.1%	7.49	1.92	56.0	45.8	33.8	32.9	27.7	30.1	25.1	842	858	845	3.1	45.0	41.98	49.13	43.7	25.02	19.02	nd	0.911	0.46	17.8	4.04	bl
01/16/08	10:19	6187.17	42.6%	9.00	1.91	56.0	47.1	36.1	34.9	28.1	29.9	19.9	803	826	818	4.3	52.5	69.36	70.77	52.5	29.57	22.72	nd	0.919	1.49	20.3	5.23	bl
01/17/08	8:44	6207.86	45.8%	9.00	1.96	56.0	46.1	36.6	34.7	30.2	30.1	22.6	850	874	860	4.6	53.5	60.12	62.15	52.5	30.29	23.39	nd	0.923	1.03	21.4	4.59	bl
01/18/08	9:28	6229.25	49.1%	8.98	2.03	56.0	44.1	34.6	33.8	28.0	30.1	23.7	899	918	905	5.8	53.5	50.74	54.42	52.4	31.37	24.12	nd	0.926	0.87	22.5	4.22	bl
01/23/08	9:11	6252.9	42.4%	9.99	1.97	55.0	52.2	37.6	36.2	28.8	30.0	18.1	815	847	829	5.6	58.0	77.29	79.24	58.3	33.58	26.05	nd	0.922	2.19	23.7	6.65	bl
01/30/08	11:15	6291.76	45.4%	9.98	1.99	56.5	48.2	36.7	35.3	28.2	29.9	20.1	847	878	861	5.3	58.0	67.21	70.02	58.2	34.18	26.31	nd	0.917	1.42	24.4	5.67	bl
01/31/08	9:10	6311.85	49.0%	9.99	2.06	56.0	46.1	36.1	35.1	28.3	30.2	22.9	902	922	916	5.8	58.0	56.47	60.72	58.3	35.53	27.21	nd	0.922	0.94	26.3	4.85	bl
										Base Line Test																		
02/01/08	9:07	6333.97	42.7%	7.51	1.80	54.5	42.7	34.8	34.0	28.6	30.2	22.1	764	783	778	3.4	44.5	57.93	58.86	43.8	23.94	17.87	nd	0.896	0.91	16.1	3.85	bl
										Most Affordable Point (MAP) Period																		
02/05/08	2:18	6365.02	45.6%	9.05	1.97	55.5	50.1	35.2	34.1	27.9	29.9	21.8	844	868	859	4.2	53.5	60.34	62.96	52.8	30.68	23.64	nd	0.916	1.05	21.5	5.47	bl
02/06/08	4:25	6389.4	45.2%	8.98	1.93	56.0	43.1	35.1	34.1	27.8	29.9	21.6	838	859	843	3.9	53.0	59.92	63.46	52.4	29.86	22.95	nd	0.912	1.02	20.9	4.49	bl
02/07/08	10:22	6407.35	45.2%	8.98	1.95	56.0	46.4	35.3	34.5	28.1	29.9	21.8	840	861	850	5.6	53.0	59.88	63.61	52.4	30.25	23.17	nd	0.912	1.01	21.0	4.91	bl
02/08/08	11:04	6430.12	45.0%	8.97	1.94	56.0	43.1	35.1	34.2	27.7	29.8	21.4	840	860	845	3.8	52.5	60.19	63.84	52.3	30.18	23.08	nd	0.912	0.98	20.9	4.52	bl
02/12/08	9:00	6455.09	45.9%	9.02	1.94	57.0	47.2	35.3	34.2	27.9	29.9	22.0	839	859	845	4.2	53.5	60.31	61.98	52.6	30.44	23.13	nd	0.912	1.01	21.3	5.14	bl
02/13/08	10:45	6478.85	45.9%	9.02	1.95	57.0	46.0	35.3	34.2	27.9	29.9	22.1	840	861	850	4.2	53.5	60.67	61.89	52.6	30.52	23.29	nd	0.913	1.03	21.2	4.75	bl
02/14/08	11:20	6501.59	45.7%	9.02	1.95	56.0	44.1	35.3	34.2	27.8	29.9	22.1	843	865	858	4.2	53.5	59.74	62.46	52.6	30.67	23.34	nd	0.914	1.01	21.3	4.66	bl
02/15/08	9:08	6523.37	45.6%	9.03	1.95	55.0	49.1	35.8	34.7	28.2	30.1	22.1	843	865	856	4.5	53.5	59.76	62.78	52.7	30.43	23.38	nd	0.913	1.02	21.4	5.28	bl
02/19/08	13:05	6547.73	45.6%	9.03	1.94	56.0	45.0	35.5	34.5	31.7	30.0	22.3	845	865	855	4.5	53.7	59.21	62.97	52.7	30.29	23.20	nd	0.914	1.00	21.1	4.7	bv
02/20/08	10:07	6566.39	46.0%	9.02	1.95	56.0	48.4	35.3	34.2	27.8	29.9	22.0	841	861	850	4.5	53.5	59.88	61.85	52.6	30.41	23.31	nd	0.913	1.03	21.2	5.24	bl
	MAP Average		45.6%	9.01	1.95	56.1																						
	MAP Maximum		46.0%	9.05	1.97	57.0																						
	MAP Minimum		45.0%	8.97	1.93	55.0																						
										Base Line Test																		
02/21/08	9:15	6587.62	42.2%	7.51	1.80	56.0	42.1	34.6	33.8	27.9	30.0	22.5	763	782	777	3.1	45.0	57.53	59.91	43.8	23.76	17.87	nd	0.893	0.89	16.1	3.99	bl
02/22/08	9:58	6612.33	42.2%	7.51	1.81	56.0	46.9	34.3	33.6	27.4	29.9	22.4	760	780	773	2.8	44.5	57.92	60.11	43.8	23.71	17.96	nd	0.894	0.91	16.1	4.54	bl
DOW-FILMTEC Hybrid 1 SW30XHR-400i - 1 SW30XLE-400i - 5 XUS-259124 x 3 vessels										**Membrane Ripening Period**																		
02/27/08	11:25	6631.98	42.2%	7.51	1.75	58.0	41.2	33.8	33.0	26.9	29.3	22.0	744	762	755	2.2	44.5	58.02	60.04	43.8	23.33	17.39	nd	0.893	0.89	15.4	3.94	bl
02/28/08	9:25	6653.99	42.5%	7.53	1.76	57.0	45.2	34.6	33.7	27.4	29.9	22.1	744	765	759	2.8	44.5	57.93	59.48	43.9	23.65	17.51	nd	0.889	0.85	15.7	4.38	bl
02/29/08	9:46	6676.55	42.4%	7.51	1.75	58.0	42.4	44.5	33.6	27.3	29.9	22.1	745	763	755	2.7	44.5	57.81	59.49	43.8	23.26	17.41	nd	0.888	0.88	15.6	4.06	bl
03/04/08	9:26	6699.51	42.0%	7.53	1.75	56.0	47.9	34.6	33.7	27.3	29.9	22.2	742	761	753	2.7	44.5	57.81	60.61	43.9	23.23	17.43	nd	0.886	0.91	15.5	4.74	bl
03/05/08	9:39	6721.62	42.2%	7.53	1.75	56.0	42.2	34.4	33.6	27.4	29.9	21.9	744	763	758	2.7	45.0	57.73	60.01	43.9	23.43	17.47	nd	0.886	0.90	15.7	4.04	bl
03/06/08	9:53	6745.85	42.5%	7.51	1.76	56.5	46.9	34.3	33.6	27.3	29.9	22.4	745	763	758	2.7	44.5	57.96	59.18	43.8	23.27	17.52	nd	0.887	0.94	15.5	4.58	bl
03/07/08	10:34	6768.52	42.3%	7.49	1.75	58.0	44.1	34.1	33.2	29.1	29.9	22.2	747	763	758	2.3	44.5	57.43	59.64	43.7	23.45	17.41	nd	0.889	0.89	15.7	4	bl
03/11/08	10:21	6794.4	42.4%	7.51	1.76	57.0	42.3	34.4	33.5	27.3	29.9	22.0	745	768	760	2.3	44.5	57.61	59.42	43.8	23.64	17.51	nd	0.887	0.91	15.6	4.11	bl
03/12/08	12:42	6820.72	42.4%	7.53	1.76	57.0	47.5	34.5	33.8	28.0	30.0	22.2	750	770	760	2.8	44.0	58.57	59.75	43.9	23.72	17.55	nd	0.884	0.90	15.8	4.65	bv
03/13/08	12:15	6842.29	42.6%	7.56	1.75	57.0	43.0	34.5	33.0	31.0	29.8	22.0	750	770	765	2.6	44.0	58.70	59.48	44.1	23.59	17.56	nd	0.887	0.90	15.8	4.25	bv
03/18/08	10:48	6884.52	42.4%	7.53	1.79	54.5	52.2	34.8	33.9	27.6	30.0	22.6	758	778	765	3	45.0	58.02	59.74	43.9	23.64	17.82	nd	0.889	1.04	15.8	5.27	bl
										12 Point flux and Recovery Period																		
03/19/08	10:54	6906.91	43.0%	6.00	1.66	54.5	40.4	33.5	32.9	27.6	30.1	24.5	704	720	715	2.1	36.0	46.32	51.36	35	18.72	13.23	nd	0.832	0.61	11.4	3.31	bl Unbalanced PX to compensate low flo
03/20/08	10:01	6930.05	47.1%	6.00	1.69	54.5	43.6	33.1	32.8	27.6	29.9	25.1	735	743	739	2.1	36.5	39.36	48.66	35	19.27	13.45	nd	0.836	0.45	12.2	3.6	bl Unbalanced PX to compensate low flo
03/21/08	9:31	6951.88	50.8%	5.95	1.79	56.0	38.1	33.1	32.5	27.2	30.1	25.8	780	788	784	2.1	36.0	33.57	46.42	34.7	19.71	14.11	nd	0.834	0.28	12.9	2.95	bl Unbalanced PX to compensate low flo
03/25/08	10:05	6977.77	42.3%	7.51	1.77	55.0	45.4	34.8	33.8	27.9	29.9	22.1	753	771	761	3.2	45.0	57.79	59.85	43.8	23.32	17.59	nd	0.887	0.94	15.7	4.35	bl
03/26/08	9:59	6999.91	46.5%	7.49	1.79	56.0	42.2	34.1	33.4	27.5	29.9	23.4	781	798	787	2.9	45.0	50.22	53.12	43.7	23.77	17.81	nd	0.891	0.75	16.3	3.77	bl unbalanced PX was operator error
04/08/08	9:39	7138.64	50.9%	7.53	1.89	55.0	46.9	34.4	33.9	29.2	29.9	24.2	830	843	839	2.9	45.6	42.42	51.54	43.9	25.03	18.82	nd	0.893	0.48	17.5	4.38	bl Unbalanced PX to compensate low flo
03/27/08	10:06	7024.03	50.9%	7.49	1.86	56.0	47.9	33.9	33.1	31.1	29.9	24.7	722	738	728	2.7	45.0	42.18	50.54	43.7	24.49	18.46	nd	0.893	0.47	18.1	4.39	bl, feed pressure went down but recover
04/01/08	13:30	7060.47	42.1%	9.00	1.89	55.0	52.5	37.0	35.5	28.0	29.8	19.5	790	815	800	4.4	53.0	71.14	72.34	52.5	29.59	22.49	nd	0.909	1.60	19.8	6.15	bv
04/04/08	12:01	7115.52	46.7%	9.02	1.91	56.0	52.6	36.3	35.2	27.6	29.9	21.1	825	845	838	4.1	53.5	59.92	63.94	52.6	29.84	22.77	nd	0.908	1.02	20.7	5.86	bl unbalanced PX was operator error
04/09/08	10:09	7160.95	50.8%	8.98	2.00	54.0	50.0	36.0	35.1	27.6	29.9	23.1	885	900	895	4.2	54.0	50.76	56.85	52.4	31.24	23.78	nd	0.911	0.84	22.0	5.28	bl unbalanced PX was operator error
04/10/08	9:32	7182.71	55.9%	8.98	2.10	54.0	46.6	35.8	34.9	27.7	29.9	24.1	940	951	944	4.2	54.0	41.34	53.03	52.4	32.65	24.96	nd	0.915	0.49	23.4	4.67	bl Unbalanced PX to compensate low flo
04/11/08	9:45	7205.34	42.7%	10.03	1.99	56.0	52.1	36.8	35.2	26.9	27.3	15.2	827	860	842	5.4	58.0	77.27	78.62	58.5	34.63	26.38	nd	0.918	1.98	24.2	6.65	bl
04/16/08	9:23	7235.23	46.6%	9.98	2.01	56.0	53.5	34.4	33.1	24.2	25.4	15.8	858	883	873	5.5	58.5	66.76	71.23	58.2	34.75	26.58	nd	0.911	1.48	24.9	6.54	bl unbalanced PX was operator error

TIME			CALCULATED PARAMETERS			TEMP	PRESSURES										FLOWS				MAIN PANEL KW METER				VFD KW METER			
		Operation	RO	Flux	Power		P_{MF-in}	P_{MF-out}	P_{CF-in}	P_{CF-out}	$P_{PX-Feed\ In}$	$P_{PX-conc\ out}$	$P_{PX-boost\ suct}$	P_{F-SYS}	P_{C-SYS}	P_{P-SYS}	$Q_{F-HP\ Pump}$	$Q_{PX\ Pump}$	$Q_{Feed\ PX-In}$	Q_{P-SYS}	A_{sys}	P HP/PX	P booster	Power	PX power	HP Power	Feed Pump	
Date	Time	Time	Recovery %	Gfd	kWh/m3	Influent	(psi)	(psi)	(psi)	(psi)	(psi)	(psi)	(psi)	(psi)	(psi)	(psi)	(gpm)	(gpm)	(gpm)	(gpm)	amp	(kw)	(kw)	Factor	(kw)	(kw)	(kw)	Notes
MM/DD/YY	hh:mm	hh.hh				Temp F	1	2	3	4	5	6	7	8	9	10	11	12	13	14	15	16	17	18	19	20	21	
04/17/08	8:05	7255.32	50.7%	9.96	2.06	56.0	52.6	38.4	37.3	27.5	30.0	22.1	905	925	919	5.6	58.5	56.51	61.17	58.1	35.15	27.24	nd	0.921	0.97	26.0	5.99	bl unbalanced PX was operator error
										Base Line Test																		
04/18/08	9:14	7278.18	42.2%	7.47	1.79	56.0	49.1	37.5	36.6	27.2	29.9	20.0	760	781	773	3.1	45.5	57.61	59.66	43.6	23.85	17.73	nd	0.881	0.91	16.0	4.95	bl
										Most Affordable Point (MAP) Period																		
04/23/08	7:29	7295.88	46.2%	9.02	1.96	55.0	56.9	34.3	33.1	24.8	26.2	18.7	845	868	860	4.6	54.0	59.84	61.14	52.6	30.75	23.39	nd	0.905	0.97	21.3	6.29	bl
04/24/08	7:58	7318.55	46.7%	9.02	1.95	54.0	53.9	38.6	37.4	30.2	30.0	22.1	840	862	853	4.6	54.0	59.95	62.86	52.6	30.45	23.24	nd	0.905	1.05	21.1	5.95	bl unbalanced PX was operator error
04/25/08	7:53	7340.62	46.5%	9.00	1.95	54.5	52.9	38.8	37.7	27.6	29.9	21.6	842	865	858	4.4	53.5	60.41	62.76	52.5	30.44	23.22	nd	0.909	1.01	21.2	5.86	bl unbalanced PX was operator error
04/29/08	9:40	7364.91	46.8%	9.02	1.92	56.0	55.6	38.1	37.1	27.0	29.1	20.9	824	847	839	4.1	53.0	59.83	65.14	52.6	30.05	22.94	nd	0.915	1.17	20.8	6.39	bl unbalanced PX was operator error
04/30/08	10:48	7388.17	46.6%	9.02	1.92	56.0	55.1	39.3	38.2	27.3	29.8	20.8	833	858	841	4.1	53.0	60.26	64.96	52.6	30.12	22.95	nd	0.912	1.08	20.9	6.4	bl unbalanced PX was operator error
05/01/08	12:32	7412.33	46.6%	8.98	1.94	56.0	55.1	38.9	37.6	26.2	28.2	19.9	825	851	839	3.9	53.0	60.08	64.74	52.4	30.51	23.09	nd	0.905	1.25	20.8	6.38	bl unbalanced PX was operator error
05/02/08	8:36	7430.85	46.7%	9.02	1.93	56.0	53.1	41.3	40.2	27.8	29.9	20.8	828	855	840	4.1	53.0	60.03	65.42	52.6	30.29	23.03	nd	0.907	1.07	20.9	6	bl unbalanced PX was operator error
Toray membranes - TM800E-400 (Set 2)										**Membrane Ripening Period**																		
05/16/08	10:10	7475.52	42.5%	7.46	1.87	62.0	42.1	35.6	34.7	26.8	29.2	21.9	795	815	800	2.1	44.5	57.58	58.94	43.5	25.04	18.52	nd	0.893	0.94	16.7	4.35	bl
05/20/08	8:56	7554.92	42.6%	7.51	1.90	59.0	43.9	36.2	35.3	31.1	29.9	22.5	803	825	817	2.8	45.0	57.63	59.11	43.8	25.45	18.89	nd	0.892	0.99	17.0	4.55	bl
05/21/08	8:43	7578.71	42.5%	7.51	1.92	57.0	44.8	36.3	35.4	31.0	29.8	22.1	818	839	824	2.7	45.0	57.67	59.14	43.8	25.52	19.09	nd	0.895	0.94	17.2	4.68	bl
05/22/08	8:50	7602.85	42.6%	7.51	1.91	57.0	45.5	36.5	35.7	31.1	29.2	22.0	815	837	822	2.7	45.0	57.48	59.13	43.8	25.45	19.01	nd	0.893	0.93	17.2	4.85	bl
05/23/08	9:47	7622.36	42.6%	7.51	1.94	56.0	58.1	37.0	36.1	28.4	29.8	22.1	824	843	835	2.7	45.0	57.74	58.92	43.8	25.65	19.26	nd	0.894	0.97	17.4	5.51	bl
05/28/05	9:02	7644.67	42.5%	7.51	1.89	59.0	51.0	39.7	38.8	28.6	29.8	22.2	800	820	810	2.6	45.0	57.79	59.26	43.8	25.02	18.77	nd	0.893	0.97	16.9	5.23	bl
05/29/08	9:15	7666.9	42.6%	7.53	1.90	58.0	57.3	39.2	38.4	28.2	29.9	22.3	810	833	819	2.6	45.0	58.07	59.12	43.9	25.51	18.95	nd	0.891	0.96	17.0	6.06	bl
05/30/08	9:43	7689.43	42.5%	7.51	1.91	58.0	51.4	40.1	38.7	28.2	29.8	22.3	808	830	820	2.6	45.0	58.21	59.31	43.8	25.64	18.95	nd	0.893	0.97	17.1	5.25	bl
										12 Point flux and Recovery Period																		
06/03/08	10:40	7716.07	42.9%	6.07	1.85	56.0	42.8	35.4	34.9	29.8	29.9	25.1	784	800	895	1.6	37.0	45.40	47.06	35.4	20.93	14.88	nd	0.852	0.57	13.2	3.55	bl
06/04/08	9:04	7738.45	46.9%	6.03	1.90	56.0	47.2	36.1	35.5	29.9	29.9	24.9	811	821	818	2.6	37.0	39.85	49.06	35.2	21.27	15.18	nd	0.832	0.44	13.9	4.09	bl Unbalanced PX to compensate low flo
06/05/08	9:01	7760.47	49.8%	6.02	1.91	56.0	42.5	35.9	35.3	28.1	29.9	25.7	839	844	840	1.6	37.0	35.36	44.74	35.1	21.21	15.21	nd	0.844	0.34	13.9	3.47	bl Unbalanced PX to compensate low flo
06/06/08	8:58	7784.41	42.6%	7.51	1.92	56.0	52.4	39.0	38.2	28.4	29.8	22.1	820	840	828	3.6	45.0	58.07	58.96	43.8	25.57	19.09	nd	0.891	0.95	17.2	5.41	bl
06/10/08	8:40	7808.46	46.0%	7.51	1.91	62.0	48.3	37.1	36.5	28.1	29.8	23.8	828	846	840	2.6	44.5	50.05	51.34	43.8	25.41	18.95	nd	0.894	0.91	17.3	4.48	bl
06/11/08	9:58	7831.83	50.8%	7.49	1.96	62.0	45.6	37.7	36.9	27.8	29.7	24.3	863	879	870	2.3	44.5	42.37	49.35	43.7	26.21	19.41	nd	0.897	0.50	17.9	4.31	bl
06/12/08	9:19	7855.19	44.0%	8.98	2.06	62.0	54.1	29.3	28.3	17.9	17.9	9.2	850	880	862	2.3	52.5	69.91	66.56	52.4	32.21	24.47	nd	0.913	1.60	21.8	6.41	bl px inlet maxed out at value
06/24/08	8:40	7999.57	42.6%	8.98	2.02	60.0	53.0	41.9	40.9	38.9	29.6	19.1	840	875	857	3.8	52.0	69.15	70.62	52.4	31.91	24.02	nd	0.907	1.59	21.3	6.37	bl
06/13/08	9:38	7877.97	46.2%	9.00	2.04	62.0	55.4	38.1	37.1	25.3	25.0	18.6	878	900	886	2.6	53.0	60.26	61.10	52.5	32.13	24.29	nd	0.905	1.05	22.2	6.34	bl
06/17/08	13:15	7907.97	50.0%	9.00	2.14	60.0	54.5	40.5	39.5	30.8	29.5	23.0	950	965	955	4.5	52.0	51.45	52.48	52.5	33.75	25.50	nd	0.915	0.95	23.8	6	bv
06/18/08	15:05	7931.88	43.5%	9.91	2.16	60.0	51.0	37.0	35.5	23.5	21.5	10.8	890	925	910	4.5	58.0	76.97	75.22	57.8	37.46	28.32	nd	0.923	2.15	26.6	6.7	bv, valve on px open all the way
06/19/08	17:45	7956.48	45.7%	9.94	2.12	62.0	52.0	38.0	37.0	25.0	23.5	14.0	910	935	920	4	58.0	67.72	68.83	58	36.27	27.93	nd	0.927	1.50	26.6	6.5	bv
06/20/08	12:25	7975.14	49.3%	9.94	2.18	61.0	53.5	35.0	34.0	21.5	22.0	14.5	960	980	970	4.3	58.0	56.67	59.60	58	37.60	28.67	nd	0.927	1.00	28.3	6.4	bv
06/25/08	9:05	8022.25	42.6%	7.47	1.89	60.0	49.4	41.3	40.6	28.2	29.7	22.3	798	819	805	2.5	44.5	57.43	58.84	43.6	25.15	18.67	nd	0.887	0.95	16.8	5.07	bl
										Most Affordable Point (MAP) Period																		
06/27/08	8:32	8052.85	45.6%	8.97	2.04	60.0	46.9	41.1	40.0	31.4	29.2	21.2	875	899	882	3.6	52.5	60.34	62.35	52.3	31.99	24.18	nd	0.910	1.10	22.1	5.63	bl
06/30/08	9:15	8125.55	45.5%	8.98	2.05	61.0	46.9	40.9	39.8	31.5	29.5	21.3	884	912	900	3.7	52.5	59.85	62.76	52.4	32.50	24.45	nd	0.909	1.10	22.3	5.58	bl
07/08/08	8:54	8236.56	46.0%	9.00	2.03	62.0	46.1	40.2	39.1	30.8	29.4	21.4	875	898	883	3.7	52.5	60.21	61.75	52.5	32.06	24.16	nd	0.909	1.05	22.1	5.42	bl
07/09/08	9:35	8261.25	42.4%	7.49	1.87	63.0	43.9	38.9	37.8	30.5	29.7	22.0	785	805	797	1.8	44.0	57.62	59.43	43.7	25.31	18.53	nd	0.889	0.91	16.6	4.79	bl
DOW-FILMTEC - SW30XHR-400i high boron rejection										**Membrane Ripening Period**																		
09/24/08	15:29	8263.81	42.1%	7.46	2.04	63.0	34.1	33.1	32.2	30.2	29.3	21.9	845	864	859	2.1	44.0	57.81	59.91	43.5	26.50	20.14	nd	0.905	0.82	18.3	3.58	bl
09/25/08	9:25	8281.77	42.3%	7.51	2.03	62.0	34.6	33.7	32.8	30.7	29.8	22.0	858	875	861	2.5	44.0	57.77	59.73	43.8	26.78	20.19	nd	0.905	0.93	18.1	3.56	bl
09/26/08	9:13	8305.56	42.3%	7.51	2.05	62.0	34.5	33.5	32.7	30.5	29.6	21.9	861	881	875	2.3	44.0	57.89	59.81	43.8	27.12	20.39	nd	0.905	0.93	18.3	3.58	bl
09/29/08	15:15	8321.91	42.2%	7.51	2.01	61.0	34.0	32.9	31.9	29.8	29.0	21.4	840	860	850	1.8	44.0	58.11	60.04	43.8	26.42	19.98	nd	0.904	0.96	17.9	3.58	bl
09/30/08	12:15	8351.1	42.2%	7.51	2.02	60.0	34.3	32.9	31.9	29.3	28.5	21.0	853	870	860	1.8	44.0	57.56	60.01	43.8	27.11	20.12	nd	0.898	0.92	18.1	3.65	bl
10/07/08	7:45	8391.5	42.4%	7.53	1.92	64.0	34.9	33.5	32.2	29.9	28.7	21.2	805	825	818	2.3	44.5	58.04	59.52	43.9	25.53	19.18	nd	0.889	0.86	17.3	3.6	bl
10/08/08	9:22	8415.65	42.3%	7.53	1.93	65.0	34.7	33.1	32.0	29.3	28.2	20.5	805	825	818	1.8	44.0	57.95	59.96	43.9	26.05	19.23	nd	0.892	0.93	17.2	3.59	bl
10/16/08	8:46	8435.86	41.7%	7.51	1.96	61.0	35.1	34.2	33.3	31.0	29.9	21.9	830	847	840	2.6	45.0	57.43	61.35	43.8	26.16	19.54	nd	0.886	0.88	17.5	3.73	bl
10/17/08	9:37	8460.71	42.0%	7.53	1.95	61.0	35.2	34.3	33.4	30.9	29.8	21.9	829	847	840	2.5	45.0	57.35	60.72	43.9	26.38	19.49	nd	0.888	0.86	17.7	3.63	bl
10/20/08	9:30	8532.58	42.2%	7.53	1.96	60.0	35.8	34.8	34.0	31.1	29.9	22.1	836	855	842	2.8	45.0	57.47	60.12	43.9	25.75	19.51	nd	0.904	0.89	17.5	3.65	bl
10/21/08	9:30	8556.6	42.2%	7.53	1.93	61.0	35.6	34.7	33.8	31.1	29.9	22.1	824	841	837	2.7	45.0	58.08	60.17	43.9	26.15	19.27	nd	0.887	0.87	17.4	3.64	bl
10/22/08	9:47	8577.75	42.0%	7.51	1.91	64.0	34.7	33.8	32.9	30.1	29.2	21.3	815	830	821	1.7	44.0	57.63	60.46	43.8	25.78	18.96	nd	0.887	0.85	17.1	3.63	bl
10/23/08	9:00	8600.98	42.1%	7.47	1.92	64.0	35.0	34.1	33.2	30.3	29.4	21.5	815	834	822	2.1	44.0	57.53	60.05	43.6	25.79	18.99	nd	0.887	0.86	17.1	3.72	bl

TIME			CALCULATED PARAMETERS			TEMP	PRESSURES										FLOWS				MAIN PANEL KW METER				VFD KW METER			
		Operation	RO	Flux	Power		P_{MF-in}	P_{MF-out}	P_{CF-in}	P_{CF-out}	$P_{PX-Feed\ In}$	$P_{PX-conc\ out}$	$P_{PX-boost\ suct}$	P_{F-SYS}	P_{C-SYS}	P_{P-SYS}	$Q_{F-HP\ Pump}$	$Q_{PX\ Pump}$	$Q_{Feed\ PX-In}$	Q_{P-SYS}	A_{sys}	P HP/PX	P booster	Power	PX power	HP Power	Feed Pump	
Date	Time	Time	Recovery %	Gfd	kWh/m3	Influent	(psi)	(psi)	(psi)	(psi)	(psi)	(psi)	(psi)	(psi)	(psi)	(psi)	(gpm)	(gpm)	(gpm)	(gpm)	amp	(kw)	(kw)	Factor	(kw)	(kw)	(kw)	Notes
MM/DD/YY	hh:mm	hh.hh				Temp F	1	2	3	4	5	6	7	8	9	10	11	12	13	14	15	16	17	18	19	20	21	
10/24/08	11:10	8627.13	42.3%	7.51	1.91	65.0	34.5	33.6	32.8	30.1	29.2	21.4	819	835	822	1.8	44.5	57.47	59.72	43.8	25.88	19.01	nd	0.883	0.84	17.1	3.68	bl
10/27/08	10:03	8698	42.2%	7.49	1.92	64.0	35.3	34.3	33.5	31.0	29.8	22.0	816	833	822	2.5	44.5	57.73	59.86	43.7	25.60	19.03	nd	0.883	0.85	17.0	3.69	bl
10/28/08	9:01	8720.98	42.4%	6.02	1.82	63.0	33.4	32.9	32.2	30.5	29.9	24.8	779	784	781	1.5	36.5	46.45	47.72	35.1	20.78	14.51	nd	0.826	0.50	13.1	2.97	bl
10/29/08	9:39	8745.61	45.4%	5.98	1.91	63.0	33.0	32.5	32.1	30.3	29.9	26.1	820	825	821	1.4	36.5	39.94	41.99	34.9	21.52	15.11	nd	0.831	0.35	13.4	2.77	bl
11/22/08	10:07	9203.47	51.2%	6.00	1.93	60.0	41.7	41.0	40.5	30.1	29.7	24.9	835	841	839	1.2	37.5	33.42	47.02	35	21.91	15.32	nd	0.836	0.29	15.0	3.89	bl Unbalanced PX to compensate low flo
10/31/08	10:09	8790.83	42.6%	7.49	1.91	64.0	35.6	34.6	33.7	30.5	29.5	21.9	819	838	825	2.2	44.0	57.52	58.89	43.7	25.62	18.93	nd	0.885	0.78	17.0	3.68	bl
11/03/08	9:56	8863.61	46.0%	7.53	1.97	64.0	36.5	35.8	35.0	30.2	29.7	23.1	860	878	865	2.3	44.5	49.75	51.62	43.9	26.51	19.67	nd	0.885	0.60	18.1	3.61	bl
11/21/08	10:14	9179.6	51.1%	7.54	1.99	60.0	42.7	41.8	40.9	30.5	29.5	22.5	860	880	870	2.3	45.5	42.10	54.16	44	26.91	19.93	nd	0.889	0.85	18.1	4.45	bl Unbalanced PX to compensate low flo
11/05/08	9:53	8911.56	41.8%	8.98	2.10	62.0	41.2	39.9	38.8	31.2	29.8	18.9	882	907	899	4	52.0	69.51	73.02	52.4	33.11	25.01	nd	0.908	1.47	22.5	5.14	bl
11/06/08	9:14	8931.39	45.4%	9.00	2.14	61.0	40.6	39.2	38.1	31.1	29.8	21.3	927	945	940	3.8	52.5	60.22	63.04	52.5	33.82	25.54	nd	0.911	0.98	23.5	4.72	bl
11/19/08	10:25	9143.04	50.5%	9.03	2.14	62.0	43.9	42.8	41.8	31.1	29.9	22.4	940	960	950	4.3	53.5	51.72	61.95	52.7	30.21	25.65	nd	0.921	0.95	23.7	5.28	bl Unbalanced PX to compensate low flo
11/11/08	10:01	9018.95	42.1%	9.91	2.25	58.0	47.2	45.5	44.1	31.8	29.7	17.1	940	970	957	5	58.0	77.38	79.56	57.8	38.44	29.48	nd	0.916	2.10	27.1	6.56	bl
11/14/08	9:29	9064.59	45.1%	9.84	2.25	60.0	45.7	44.2	42.9	30.7	29.0	19.0	970	995	981	4	58.0	67.55	69.98	57.4	38.57	29.28	nd	0.917	1.32	28.2	6.07	bl
11/17/08	13:38	9119.69	50.2%	9.87	2.24	63.0	45.2	44.0	42.9	30.1	29.1	21.1	985	1002	998	4.6	58.0	57.16	61.08	57.6	38.57	29.36	nd	0.933	0.91	28.8	5.72	bl Unbalanced PX to compensate low flo

DESAL08-30 31 32 33 34 36-39 11/20/08 3:14 PM Page 1

ADC baseline tests reveal trends in membrane performance

John MacHarg, Affordable Desalination Collaboration, **Thomas F Seacord**, PE, and **Bradley Sessions**, Carollo Engineers, PC

The Affordable Desalination Collaboration (ADC) has completed a major milestone in its test program that profiles the state-of-the-art performance for seawater reverse-osmosis (SWRO) technology. This testing ran over two years and involved operating seven sets of standard 8 in diameter membranes in seven-element pressure-vessels including:

- FilmTec SW30HR-380, SW30XLE-400i, SW30HRLE-400i, Internally Staged Design (ISD) Hybrid
- Koch TFC 2822HF-400
- Hydranautics SWC5
- Toray TM820E-400.

All other associated equipment and designs used in these tests also represented state-of-the-art, off-the-shelf technology. Key system variables of recovery and flux ranged from 35-50% and 6-10 gallons per day (gpd) per square foot of membrane (gfd). The testing provides a body of data that can be used to define and project the performance of state-of-the-art SWRO for Southern California applications as well as a benchmark for the performance of new technologies and designs.

ADC Pilot System

The ADC demonstration plant was designed to produce between 48,100 to 75,600 gpd (182-286 m^3/d) of permeate flow using existing full-scale technologies that minimized power consumption.

Figure 1 presents a process flow diagram for the ADC's SWRO plant located at the US Navy Seawater Desalination Test Facility in Port Hueneme, California. The process uses an open ocean intake, media filters, 5 micron bag filter, a high-efficiency positive-displacement pump and an isobaric energy-recovery device. The design criteria for these components are presented in Table 1 (*see page 32*).

Test protocol

Demonstration-scale tests of each membrane set occurred in approximately seven 9-week phases. As presented in Table 2 (*see page 32*), each phase of testing has the following features.

The membranes were allowed to stabilize ("ripening") for two weeks at baseline conditions of 7.5 gfd and 42.5% recovery was performed. This "ripening" period ensured that the membrane and system performance were operating satisfactorily and at steady-state conditions.

The ADC tested each membrane set at a predetermined matrix of 9 and 12 fluxes and recovery points for ADC I and II respectively. ADC I tested 3 sets of FilmTec membranes at flux rates of 6, 7.5 and 9 gfd and 35, 42.5 and 50% recovery. ADC II extended and optimized this test regime to include 6, 7.5, 9 and 10 gfd at 42.5, 46 and 50% recovery according to Table 2.

The ADC eliminated the 35% recovery point from ADC II testing due to the results from ADC I that showed significantly higher costs at this lower recovery point . Finally, in the case of the FilmTec ISD configuration, the ADC tested a point at 9 gfd and 55% recovery, according with the manufacturer's request.

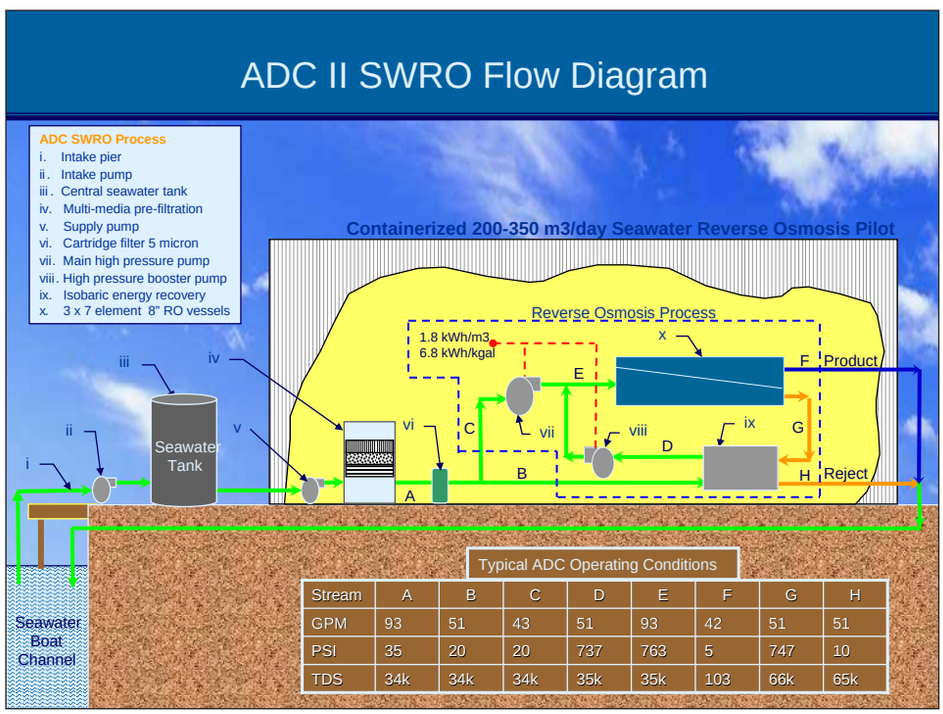

Stream	A	B	C	D	E	F	G	H
GPM	93	51	43	51	93	42	51	51
PSI	35	20	20	737	763	5	747	10
TDS	34k	34k	34k	35k	35k	103	66k	65k

Figure 1. Flow Diagram - ADC's Demonstration Scale SWRO plant

Each data point from the above flux-and-recovery matrix was input to a net present value (NPV) model to determine the most affordable point (MAP) of operation. As part of determining the MAP, a specific set of water-quality goals was established based on EPA Secondary Water Treatment Goals (TDS < 200 mg/l and boron < 1.045 mg/l).

In some cases, where these goals were not achieved at any of the matrix operating points, the ADC simply ran the demonstration at the MAP, noting the higher TDS and boron figures. Note that the test protocol outside the NPV analysis provides general water-quality goals of TDS < 500 mg/l and boron < 1.45 mg/l, to account for applications that may have less stringent water-quality requirements.

At the end of the 12-point matrix testing and at the end of the 2-3 week MAP testing, the baseline conditions of 42.5% recovery and 7.5 gfd were retested to confirm that membrane and system performance had remained stable from the first two weeks of testing.

ADC Mission and Members

The mission of the Affordable Desalination Collaboration (ADC) is to demonstrate affordable, reliable and environmentally responsible reverse-osmosis (RO) desalination technologies and to provide a platform by which cutting-edge technologies can be tested and demonstrated on their ability to reduce the overall cost of the seawater reverse-osmosis (SWRO) treatment process.

The ADC is a non-profit organization comprising the following group of industry-leading companies, state and government agencies:

- California Department of Water Resources
- California Energy Commission
- Carollo Engineers
- City of Santa Cruz Water Department
- Energy Recovery, Inc.
- FilmTec Corporation
- GE Zenon
- Hydranautics – A Nitto Denko Company
- Koch Membranes
- Metropolitan Water District of Southern California
- Naval Facilities Engineering Service Center
- Pentair Water Treatment - CodeLine Division
- Poseidon Resources
- Sandia National Laboratories
- Toray Membranes
- U.S. Bureau of Reclamation
- West Basin Municipal Water District

RESULTS AND DISCUSSION

Raw Water Quality

Raw feed water was taken from an open intake at the end of a pier located in the Port Hueneme shipping channel fed by the Pacific Ocean. Typical seawater quality tested during this study is summarized in Table 3 (*see page 32*).

As noted, the SWRO average feed water temperature was 59°F/15°C with a high of 68°F/20°C and a low of 54°F/12°C. It should be noted that once through cooling applications using a co-

ENGINEERED SOLUTIONS

Put Union Pump's aftermarket solutions to work for you

canada

england

france

singapore

united states

providing service technology and OEM parts quality for the oil and gas, petrochemical, nuclear power and generation, and desalination industries.

With Service Centers in the USA, Canada, France, and the United Kingdom:

USA: • Baton Rouge, LA • Houston, TX • Battle Creek, MI • Downey, CA
CANADA: • Burlington, Ontario • Calgary, Alberta • Edmonton, Alberta
FRANCE: • Annecy
UNITED KINGDOM: • Penistone

UNION Pump
A Textron Company

Log onto www.unionpump.com for further details on how you can put Union Pump's aftermarket solutions to work for you.

For further information please see Advertiser Contact List on page 64

located power plant intake would have higher temperatures, which would lead to different permeate qualities and energy consumptions than those reported by the ADC.

Highest temperatures tended to occur in the fall months, while the lowest temperatures were seen in spring. Feed salinity and boron remained very stable over the three years of recorded data with an average of 35,000 mg/l TDS and 5 mg/l boron.

As shown in Figure 2, ADC I tested three sets of FilmTec membranes exclusively and ADC II tested one set of membranes from each of the leading manufacturers including the Toray – TM820E-400, Koch – TFC 28822HF-400, Hydranautics – SWC5 and FilmTec (ISD) Hybrid Configuration.

Parameter		Unit	Value
Media Filter			
	Loading Rate	gpm/ft^2	3 to 6
Depth/Grain Size/U.C. of Anthracite		in/mm/-	18 / 0.85-0.95 / <1.4
Depth/Grain Size/U.C. of Sand		in/mm/-	10 / 0.45-0.55 / <1.4
Depth/Grain Size/U.C. of Gravel		in/mm/-	6 / 0.3 / <1.4
Cartridge Filter			
	Cartridge Specs		22 each, #2, 5 micron x 40 in
	Loading Rate	gpm/10-in	~1
Membrane System			
	Models		**ADC I Test** FilmTec™ SW30HR-380, FilmTec™ SW30XLE-400i, FilmTec™ SW30HR LE-400i **ADC II Test** Koch TFC 2822HF-400 Hydranautics SWC5 FilmTec™ ISD Hybrid Toray TM800E-400
	Diameter	inch	8
	Elements per Vessel	No.	7
	Vessels	No.	3
High Pressure Pump	Type Model		Positive Displacement David Brown Union, Model TD-60
	TDH	ft (psig)	1385 to 2305 (600 to 1000)
Energy Recovery	Type Model		Pressure Exchanger Energy Recovery, Inc. Model PX-70S
PX Booster Pump	Type Model		Centrifugal Energy Recovery, Inc. Model HP-8504
	TDH	ft (psig)	70 to 115 (20 to 50)

Table 1. Design Criteria for ADC's SWRO Demonstration Scale Equipment

Flux, gfd	6			7.5			9			10		
Recovery, %	42.5	46.0	50.0	42.5	46.0	50.0	42.5	46.0	50.0	42.5	46.0	50.0
HP pump, gpm	36.5	36.5	36.5	45.3	45.3	45.3	54.0	54.0	54.0	54.0	54.0	54.0
PX Booster Pump, gpm	45.9	39.6	33.5	57.7	49.9	42.3	69.5	60.1	51.0	69.5	60.1	51.0
Permeate, gpm	35.0	35.0	35.0	43.8	43.8	43.8	52.5	52.5	52.5	52.5	52.5	52.5
PX Inlet, gpm	45.9	39.6	33.5	57.7	49.9	42.3	69.5	60.1	51.0	69.5	60.1	51.0
Concentrate, gpm	47.4	41.1	35.0	59.2	51.4	43.8	71.0	61.6	52.5	71.0	61.6	52.5

Table 2. ADC II 12-Point Flux-and-Recovery Matrix

	Temp. °F / °C	Feed pH	Feed salinity Ktds	Feed Boron mg/l	Raw Feed Turbidity NTU	RO Feed Turbidity NTU	RO Feed SDI
Low	54 / 12	7.22	33.40	3.90	0.24	0.03	1.8
High	68 / 20	8.75	36.81	5.53	12.00	0.25	11.4
Average	59 / 15	7.88	35.39	4.78	1.45	0.07	4.0

Table 3. Sea/Feed Water Quality

Feed Water Turbidity and Pretreatment Performance

The pretreatment process for the ADC's demonstration-scale equipment included in-line coagulation and media filtration, followed by 5 micron cartridge filtration (see criteria established in Table 1).

Initially during ADC I, in 2005, Southern California experienced localized and prolonged periods of red tides and extensive algae blooms throughout the summer. Red tides tend to occur most frequently in the spring and fall months and average 1-2 weeks in duration. The summer of 2005 was recognized as an anomalous period.

By contrast, from the start of ADC II in August 2007 until July 2008, the ADC has experienced approximately eight discrete days in which satisfactory water quality could not be achieved using the basic multimedia system. In full-scale applications, more robust designs would be applied to ensure that water quality and continuous operation could be maintained through these challenging but brief events that occur in Southern California coastal waters.

In general, the ADC pretreatment system has performed very well for the specific application. On average, the media filtration system has reduced feed water turbidity by 95% and yielded an average RO feed water SDI of approximately 4.0. The 5 micron string-wound cartridge filtration system was used at an approximate one gallon per minute (gpm) per 10 in of equivalent cartridge length. Cartridge differential pressures at baseline conditions resulted in differential pressure increases at a rate of approximately one psi per month of operation.

Membrane Performance

Over a period of three years, the ADC tested seven different membrane sets as outlined in Table 1. The data demonstrate that low energy

consumption and satisfactory water quality can be achieved with all the leading membrane manufactures products.

The testing was performed consecutively through varying water quality conditions and should not be considered as side-by-side testing. The graphs represent the actual operating data that has not been normalized.

Therefore, the following results should not be used to make precise "apples to apples" comparisons of each manufacturer's membrane performance. Instead, they provide a benchmark for SWRO energy consumption for Southern California and reveal general trends in membrane performance.

Figure 2. Feed Water Salinity, Boron and Temperature

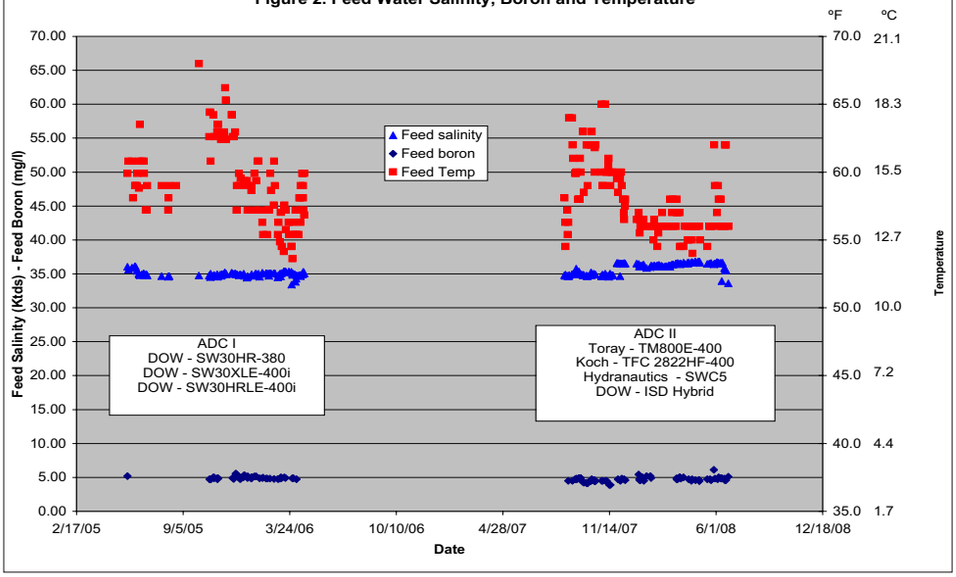

Permeate Water Quality

The impact of flux and recovery on permeate boron and TDS concentrations is presented in Figures 4.1 and 4.2 (page 34). The data were collected over the flux and recovery points shown in Table 2.

In the interest of saving space, we are only showing the graphs from 6 and 9 gfd. The complete data set can be found on the ADC web site www.affordabledesal.com on the Data Page. Notable trends include the following:

- Due to the scientific principles of diffusion, when flux increases, permeate TDS and boron concentrations decrease; when recovery increases, permeate TDS and boron concentrations increase.
- The low-energy membrane elements (SW30XLE-400i, ISD Hybrid and TFC 2822HF-400) demonstrated the ability to produce acceptable permeate quality with respect to TDS and boron. The higher rejection membrane models (SW30HR-380, SW30HRLE-400i, TM800E-400 and SWC5) demonstrated better permeate quality but at the expense of higher energy consumption, with the exception of the Hydranautics SWC5. The SWC5 demonstrated the best water quality of all the membranes that were tested, while being a relatively low- to mid-range energy consumer.

Figure 3. Feed Water Turbidity and Pre-treatment Performance

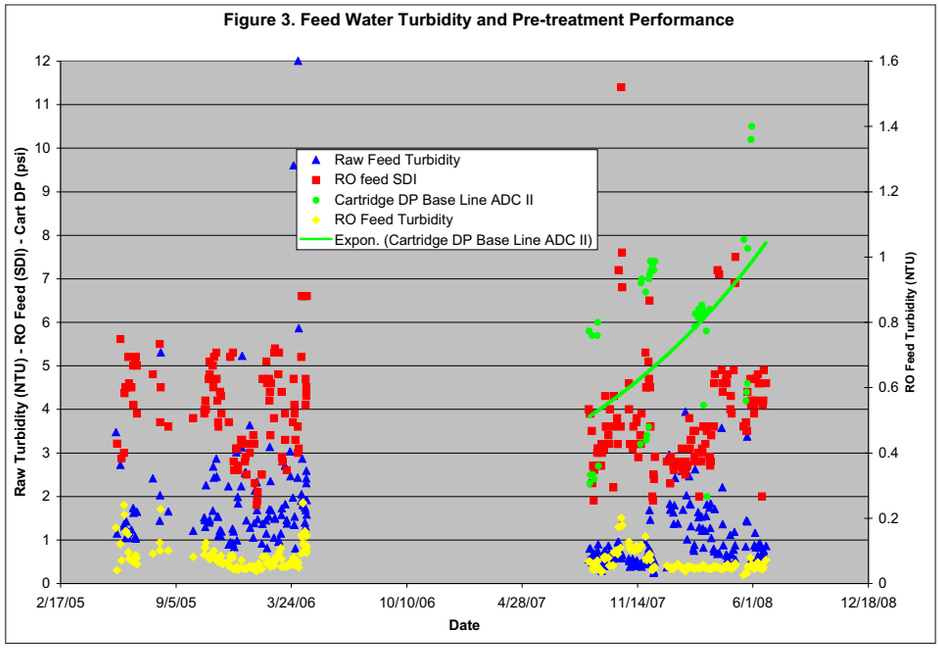

- The low-energy, low-rejection membranes produced permeate TDS levels approximately twice the high-energy, high-rejection membranes.

In some cases, using the low-energy membranes at the lower flux rates, the general water quality goals of TDS < 200 mg/l and boron < 1.045 mg/l could not be met. It should be recognized in these cases that, if the ADC test had been fed a higher temperature seawater, more typical of a co-located SWRO plant taking warm water from a once-through-cooling power-plant, the low-energy membranes may not be the best choice even at their lower cost for water.

Further testing is needed to quantify the true impact of temperature on these results. Additionally, SWRO system designers should consider public issues related to water quality, in addition to water costs, when selecting design conditions such as flux, recovery and membrane elements.

Energy Consumption

The ADC's demonstration-scale plant used off-the-shelf, state-of-the-art pumps and energy-recovery technology that are comparable in efficiency and energy consumption to the largest plants being designed today (*ie* approximately 50

MGD (190,000 m^3/d)). We will dedicate a section later in this article to explain how the ADC's results translate to various other plant sizes.

Figures 5.1 and 5.2 present specific power for each of the membranes tested. The following observations can be made based upon these graphs:

- As expected, the low-energy membrane elements (SW30XLE-400i, ISD Hybrid and TFC 2822HF-400) required less energy than the other membranes, but at the expense of permeate water quality.
- The lowest energy consumption was achieved with the FilmTec SW30XLE-400i membrane and was 6.0 kWh/kgal (1.58 kWh/m^3) @ 42% recovery and 6 gfd. The ADC considers this to be a world record for an SWRO system operating at commercially viable recovery and flux rates.
- Though specific power for the SWRO process generally increases with recovery, the total energy required for treatment decreases with increasing recovery. This is due to the increased volume of raw feed water that must be pumped and treated at lower recovery rates to obtain the same volume of permeate. Therefore, these graphs show the importance of analyzing a facility process as a whole, and not just the SWRO specific power.
- ADC total treatment energy demonstrated a range of 10.4 to 11.3 kWh/kgal (2.75-2.98 kWh/m^3) at the most affordable point for a 50 MGD design.

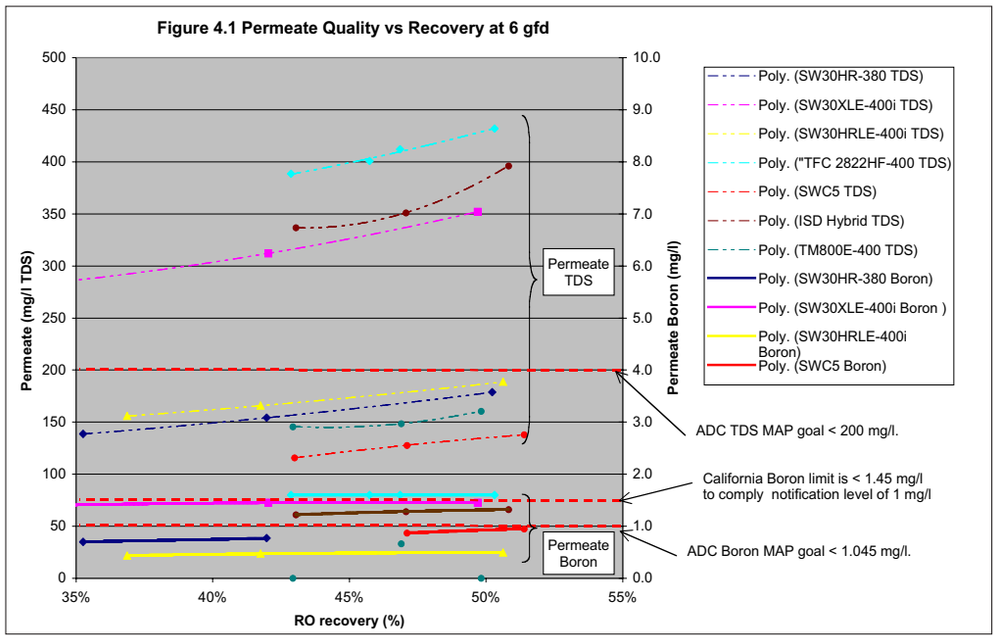

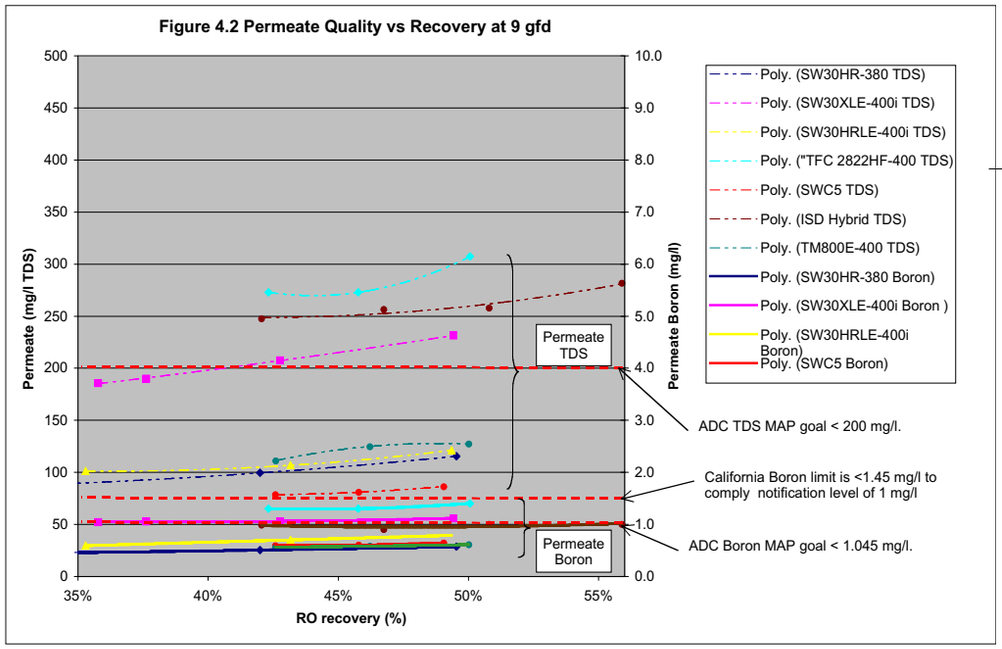

50 MGD Conceptual Costs

Cost Estimating Procedures

A net-present-value (NPV) analysis model, which accounts for both capital and operating costs, was developed and used to establish the most affordable operating point (MAP). The NPV analysis model was used at the completion of the flux/recovery variation tests, presented previously in Table 2, to establish the MAP for the demonstration test.

As mentioned earlier, as part of determining the MAP, the ADC also considered a specific set of water-quality goals of TDS < 200 mg/l and boron < 1.045 mg/l for the MAP. In some cases where these goals were not achieved at any of the matrix operating points, the MAP was demonstrated noting the higher TDS and boron figures.

Some of the assumptions and conditions for the present value analysis model are presented in Table 4. A complete version of the model can be found on the ADC's web site on the Data Page at www.affordabledesal.com.

As noted in Table 4 (*see page 36*), capital cost was determined under the assumption that the SWRO facilities would be co-located with a power plant. Therefore, the capital costs developed do not include any new intake or outfall facilities.

Pretreatment was considered similar to the demonstration-scale test equipment, however, media filters were estimated in accordance with the deep-bed filter concepts use for the Point Lisas SWRO facility in Trinidad (ie, 4 gpm/ft^2, 5-ft anthracite, 2.5-ft sand, 2-ft garnet).7 Such a design is assumed to be more compatible with challenging raw water qualities such as those associated with red tide events.

DESAL08-30 31 32 33 34 36-39 11/20/08 3:14 PM Page 6

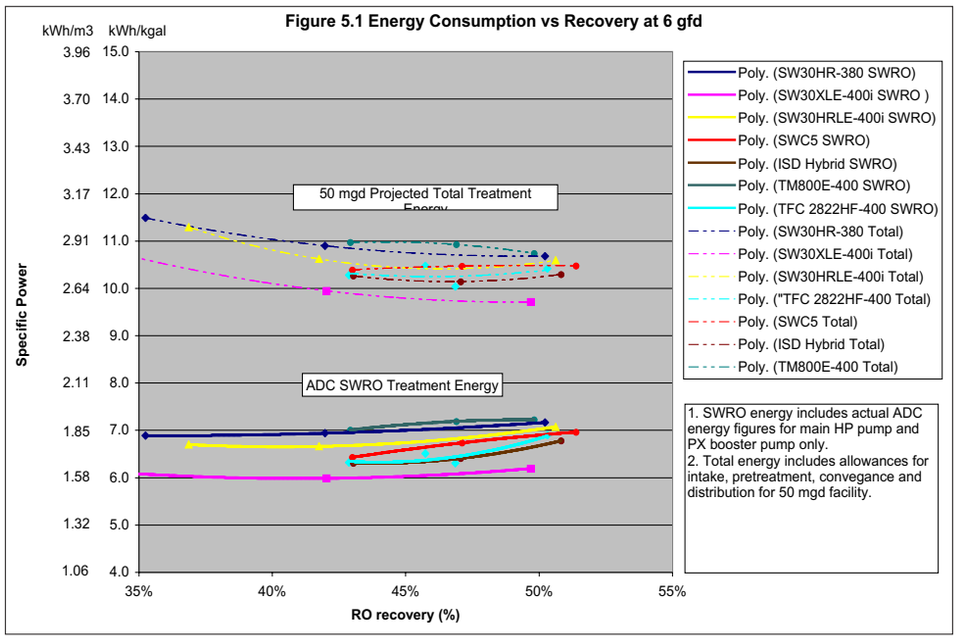

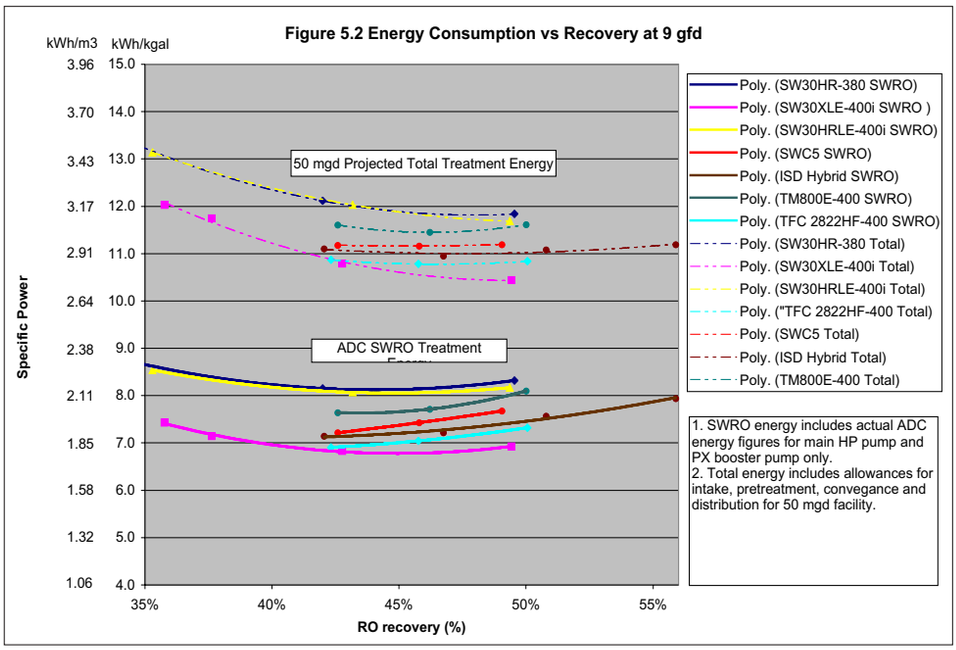

Project Size	50 MGD	Intake/High Service Pmp Motor Eff.	95%
Capital Cost [1]	Determined with WTCOST Model and Manufacturer Quotes	SWRO Process Energy Demand	Study data[2]
		Membrane Life	Refer to **Table 5**
Electrical Systems	12% of Capital Cost	Membrane Element Cost	$550
Instrumentation & Control	10% of Capital Cost	Pressure Vessel [3]	$8547
Project Life	30 years	Sodium Hypochlorite Dose (pretreatment)	2 mg/L
Bond Payment Period	30 years	Sodium Hypochlorite Cost	$1.2/lb.
Interest	5%	Sodium Bisulfite Dose	4.6 mg/L
Construction Contingencies	15% of capital cost	Sodium Bisulfite Cost	$0.3/lb.
Contractor OH&P	10% of capital cost	Cartridge Filter Loading Rate	3 gpm/10-in.
Engineering & Const. Mgmt.	25% of capital cost	Cartridge Filter Cost	$5/10-in.
Permitting Cost	$10-million	Cartridge Filter Life	1000 hours
Annual Maintenance Costs	1.5% of capital cost	Carbon Dioxide Dose	16 mg/L
Labor (burdened)	25 operators @ $96,250/yr ea.	Carbon Dioxide Cost	$0.04/lb
Power Costs	$0.11 per kW-hr	Lime Dose	44 mg/L
Intake Pump TDH	200 ft H_2O	Lime Cost	$0.05/lb.
High Service Pump TDH	200 ft H_2O	Sodium Hypochlorite Dose (finished water)	1.5 mg/L
Intake/High Service Pmp Eff.	80%		

Note: O&M does not include administrative, laboratory, legal, reporting or management fees since these costs vary widely.
Includes intake pump station, prechlorination/dechlorination systems, ferric chloride systems, media filtration, media filter backwash system, filtered water lift station, cartridge filters, SWRO equipment, RO bldg., permeate flush system, clean-in-place system, transfer pump station, process piping, yard piping, lime system, carbon dioxide system, chlorination system, high service pump station, site work.
2 Power meter readings
3 Installed, includes all ancillary piping, frames and fittings.
4 Land cost are not included in the Present Value Analysis

Table 4. Present Value Analysis Conditions

Current operation of the ADC demonstration pilot includes operation of a Zenon ultrafiltration (UF) pretreatment system, and future reporting may include an analysis of alternative pretreatment systems such as UF and media filters.

Table 5 (page 37) establishes the expected membrane life and the cumulative annual replacement rate (CARR) with respect to recovery and membrane flux. The expected membrane life is used to estimate membrane replacement cost. Membrane replacement resulting from warranty maintenance by the manufacturer was not part of the replacement cost.

Cost Estimates

Estimated cost for the ADC's conceptual 50 MGD facility are presented in Figures 6.1 and 6.2. The costs include the estimated capital cost as well as the operation and maintenance cost over the range of flux and recovery conditions tested for each membrane during the ADC's demonstration study.

As presented previously, these costs assume that the facility can share an existing open ocean intake, in-line coagulation, deep-bed media filtration, six SWRO trains with dedicated pumps, lime and carbon-dioxide post-treatment, new finished water-pumping facilities, and the utilization of an existing ocean outfall.

The following findings are drawn from these cost estimates:

- There is generally a downward trend in costs per unit volume as recovery increases due to the cost associated with feedwater pumping and pretreatment. A recovery rate of 50% was demonstrated to be the lowest estimated total water cost. Operating at a recovery of 50% is contrary to the recommendation of some in the industry that advocate lower recoveries to maximize membrane life, reduce cleaning frequencies and produce the highest quality permeate.

However, the impact of high recovery on membrane replacement costs, cleaning frequencies and permeate quality are factored into the ADC's cost estimate using the CARR values presented previously in Table 5. The

DESAL08-30 31 32 33 34 36-39 11/20/08 3:14 PM Page 7

CARR accounts for the annual replacement of membranes to maintain system performance with respect to power and permeate quality.

Therefore, it can be concluded that reducing capital costs associated with pretreatment are estimated to be more influential on total water costs than designing an SWRO process with long membrane life, low cleaning frequencies, and the lowest SWRO energy consumption.

- At the manufacture's request, the ADC operated the FilmTec ISD Hybrid membranes at 9 gfd and at an extended 55% recovery. This extended recovery point achieved an estimated 3% savings in the total treatment costs. Furthermore, the curve still trends downward indicating additional savings are possible at higher recoveries.
- Figure 7 demonstrates how higher flux resulted in lower capital cost. However, these costs savings were offset by an increase in operating costs resulting in almost no difference in the total treatment costs. Designers may choose higher flux rates to minimize capital costs and produce the best quality water even though power costs, membrane replacement costs and cleaning costs may increase as a result. Again, the ADC's costs presented in Figure 7 account for these added O&M costs resulting from higher flux rates using the CARR values presented in Table 5.
- Operation and maintenance (O&M) costs comprise approximately 45% of the total water cost. SWRO power consists of approximately 22% of the total water cost. This is a significant reduction over the industry's perception, where it is commonly believed that power costs represent 50% of the total water costs for an SWRO facility.

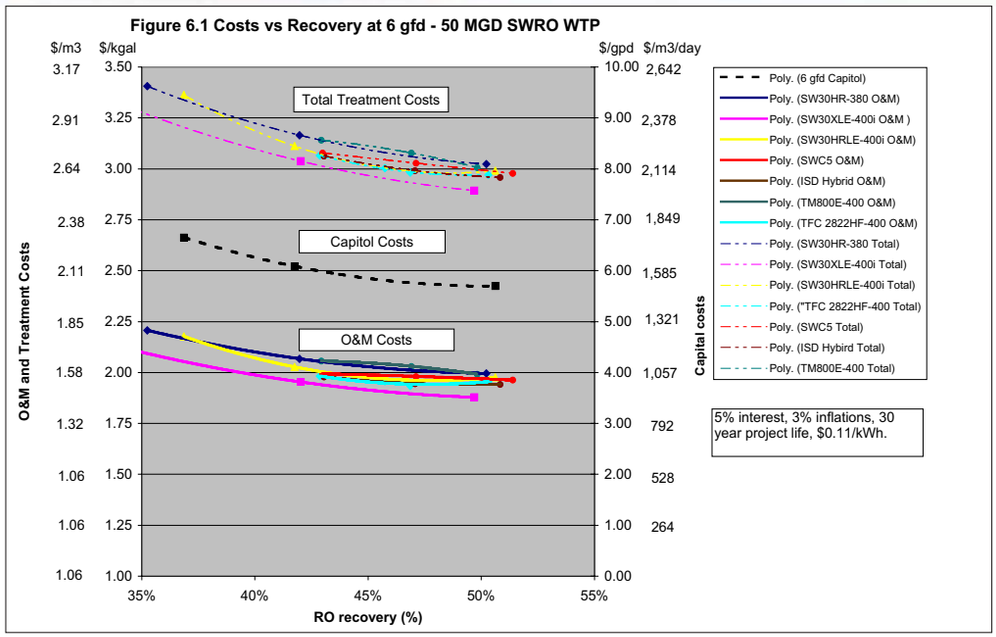

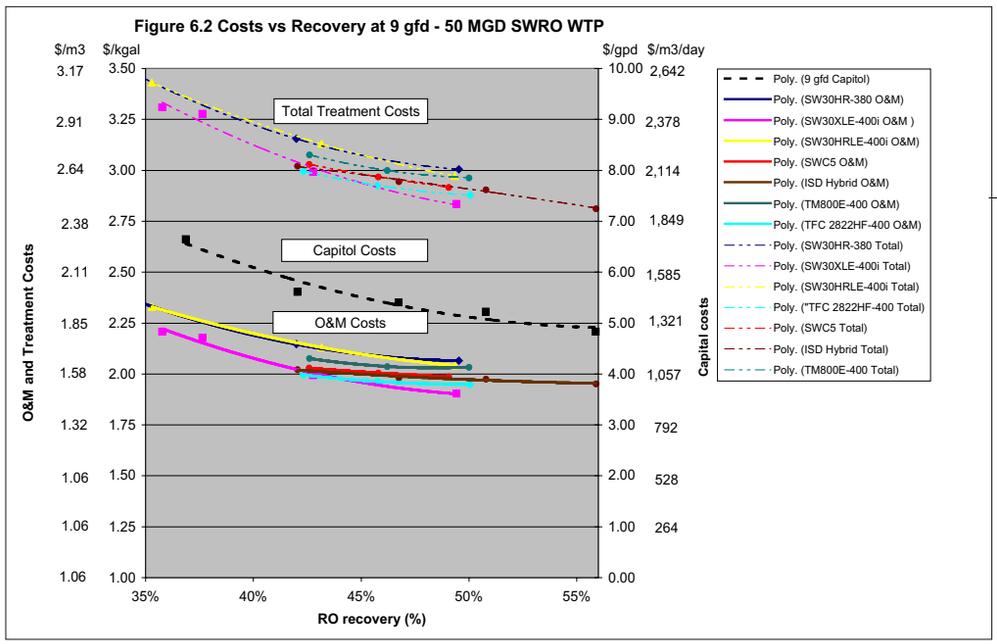

Recovery	Flux 6 GFD CARR[1]	Membrane Life	7.5 GFD CARR[1]	Membrane Life	9 GFD CARR[1]	Membrane Life
35%	7%	6.5 yrs	8%	6.25 yrs	9%	6 yrs
42.5%	9%	6 yrs	10%	5.75 yrs	11%	5.5 yrs
50%	11%	5.5 yrs	12%	5.25 yrs	13%	5 yrs

1. Cumulative Annual Replacement Rate (CARR). The percentage of membrane elements that would be replaced to maintain a performance requirement (i.e., permeate quality and energy) for a 5 year warranty.

Table 5. Membrane Life and Annual Replacement Rate.

ADC Data and Scale

The ADC demonstration plant employs a David Brown Union TD-60 positive-displacement main high-pressure pump that operates at very high efficiencies of 88-90%. Although positive-displacement plunger pumps operate at high efficiency, they cannot be employed in very large systems because of their high maintenance requirements and pulsating flows.

In the larger full-scale systems, centrifugal pumps with efficiencies between 65-88% are used. The achievable efficiency of a centrifugal pump depends on the size or flow rate of the pump, where lower flows typically will operate at lower efficiency compared to the larger pumps .

Table 6 (*page 38*) projects the total power consumption of a 0.3 MGD system that employs a 69% efficient centrifugal main high-pressure pump and

Energy consumption of various system capacities				
Treatment Step	**ADC MAP**	**0.3 mgd(2)**	**10 mgd(2)**	**50 mgd(2)**
RO Process	7.8 / 2.06 (1)	10.6 / 2.80	9.1 / 2.40	8.0 / 2.11
Intake (2)	2.17 / 0.57	2.01 / 0.53	1.74 / 0.46	1.72 / 0.45
Pre-filtration (2)	1.14 / 0.30	1.05 / 0.28	0.91 / 0.24	0.90 / 0.24
Permeate treatment (2)	0.25 / 0.07	0.23 / 0.06	0.17 / 0.04	0.16 / 0.04
Permeate distribution (2)	1.27 / 0.33	1.17 / 0.31	0.86 / 0.23	0.85 / 0.22
Total Treatment	12.6 / 3.33	15.1 / 3.99	12.8 / 3.38	11.6 / 3.06

1. MAP average value from the 4 membrane sets that met MAP water quality goals of <200 mg/l TDS and <1.045 mg/l Boron. 2. Projected values based on typical parameters and conditions. 3. kWh/kgal / kWh/m^3

Table 6. ADC Power Consumption and System Projections

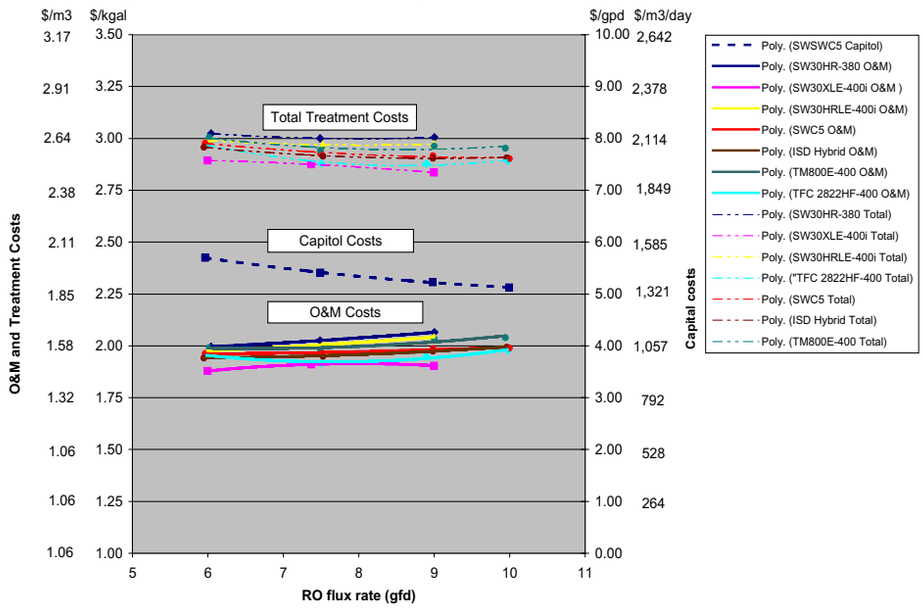

70% efficient intake and prefiltration pumps to be 15.1 kWh/kgal (3.99 kWh/m^3). By contrast, the 50 MGD projections use an efficiency of 88% for the main high-pressure pump and 80% for the intake and prefiltration pumps. In addition, the motors and control systems are generally more efficient for the largest systems resulting in a total treatment power of 11.6 kWh/kgal (3.06 kWh/m^3).

Figure 8 provides a graphical view of how the energy consumption of a system will vary with size. The largest systems have the potential to be even a more efficient than the ADC pilot because they can employ more efficient motors and control systems.

Table 7 provides figures on the associated key system parameters and performance from the ADC pilot with these values also projected over various system capacities.

According to the ADC's 50 mgd net present value model, the projected cost of water over the 4 MAP's ranged from $2.90-3.00/kgal ($0.77-$0.79/m^3) with an average of $2.95/kgal ($0.78/m^3).

CONCLUSIONS

The following results and conclusions can be made from the ADC's demonstration study data and a conceptual 50 mgd SWRO facility:

- Testing was performed consecutively and was not conducted as a side-by-side evaluation. Therefore the results should not be used to make direct performance comparisons of the manufacturers' membranes. The results provide a bench mark for SWRO energy consumption in Southern California.
- According to the performance data and NPV estimates, higher recovery consistently resulted in a projected lower total cost of water. Furthermore, the trend showed that costs could be reduced further by operating at higher recoveries than those tested in the ADC protocol.
- Though the RO specific power generally increases with recovery rate, the total energy required for treatment decreases with increasing recovery. This is due to the increased volume of raw feed water that must be pumped and treated at lower recovery rates to obtain the same volume of permeate.
- According to the performance data when analyzed by the NPV model, flux variations from 6-10 gfd were estimated to result in almost no change in the total treatment costs.
- Higher flux produced better water quality and it was estimated to have little effect on the total treatment costs.

The ADC has been able to demonstrate energy consumption for seawater desalination at levels of 10.4 to 11.3 kWh/kgal (2.75-2.98 kWh/m^3) at a projected total cost of $2.83-3.00/kgal ($0.75-$0.79/m^3). These energy levels and cost figures are comparable to other traditional sources. For example, in Southern California, the State Water Project, which transports water from Northern California to Southern California, consumes on average 10.4 kWh/kgal (2.75 kWh/m^3) . And in San Diego, California, end-users can pay more than $6.00/kgal ($1.58/m^3) . Therefore, Southern Californian seawater desalination is an affordable and reliable new source of high quality fresh water.

FUTURE STUDIES

In the future the ADC will be demonstrating new flow schemes to help increase the achievable recoveries of today's system using off-the-shelf components. In addition, the ADC plans

Process Variables	ADC MAP Average	Projections
System capacity, mgd	0.08	0.3-50
RO feed pressure, psi / bar	914 / 63	914 / 63
Flux, gfd	9.0	9.0
RO recovery, %	48%	48%
Permeate quality, TDS	119	119
Permeate Boron, mg/l	0.7	0.7
Raw water, TDS	35,640	35,640
Raw water temperature, °F / °C	60 / 15.5	60 / 15.5

Table 7. ADC Operating Parameters and Performance

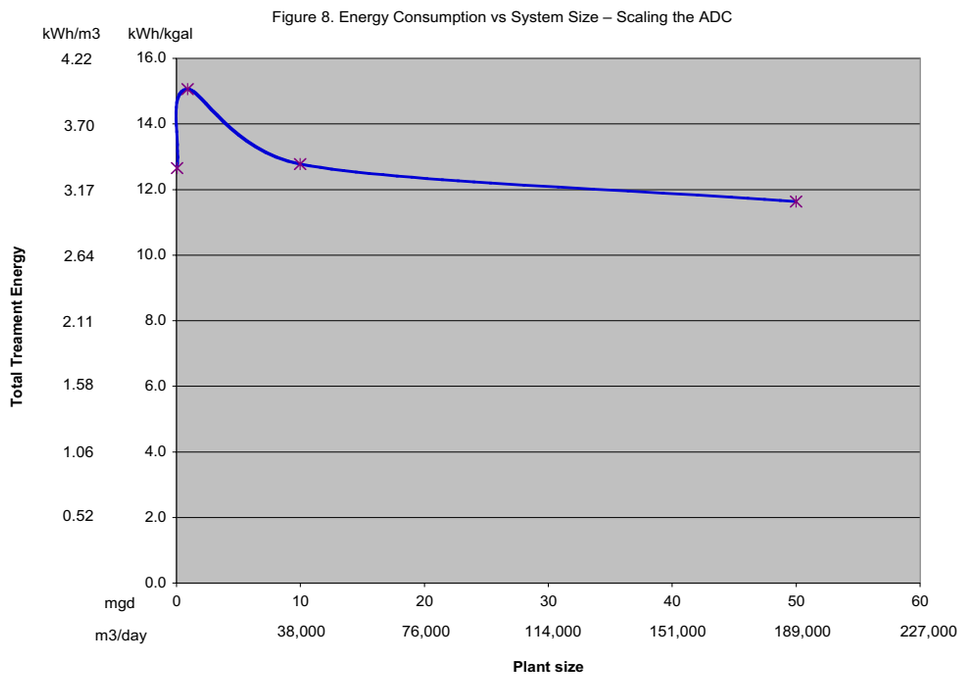

to test new prefiltration, pump and energy-recovery technologies to measure the ability of these new technologies to reduce the overall cost to produce water.

AUTHORS

John P MacHarg is Managing Director-CEO of The Affordable Desalination Collaboration and President of Ocean Pacific Technologies, Inc. Previously he was the General Manager of Energy Recovery Inc. where he was involved in the development, commercialization and marketing of pressure exchanger energy recovery technology for desalination systems. He was also a Vice President at Village Marine Technology where he worked in the design, manufacture and sales of packaged seawater desalination equipment. He has been working within the desalination industry for over 17 years.

Tom Seacord is an Associate and Project Manager with Carollo Engineers, P.C. and has been specifically dedicated for the past 10 years in the area of desalination. He is a licensed professional engineer and has a B.S. and M.S. degree in Civil Engineering from Clarkson University. Tom worked on planning, pilot testing, design, construction and start-up of desalination treatment plants in California, Florida, Kansas, Missouri, South Carolina, Texas and Utah. Tom is a current member of the AMTA Board of Directors and the current Chairperson of the Government Affairs Committee. He is a member of AMTA, SEDA, IDA, and AWWA.

He sits on the Board of Directors for the ADC.

Bradley Sessions has been with Carollo Engineers in Boise, Idaho for 2 years. Previously he worked throughout the Caribbean basin designing, building and operating SWRO facilities for Consolidated Water, Ltd. and was involved in the R&D of the DWEER energy recovery system with Desalco, Ltd.

PEER REVIEW

Gerry Filteau, Separation Processes, Inc.
Paige Gourley, Hydranautics Membranes
Phil Lauri, West Basin Municipal Water District
Rick Lesson, Koch Membranes
Victor Verbeek, Toray Membranes

REFERENCES

1. Seacord, T.F., J. MacHarg, and S. Coker. Affordable Desalination Collaboration 2005 Results. Proc. 2006 AMTA Conference. Anaheim, California.
2. Detailed NPV models can be found on the ADC Website Data Page.
3. MacHarg, J. 2001. Exchanger Tests Verify 2.0 kWh/m^3 SWRO Energy Use. *International Desalination and Water Reuse Quarterly*. Vol 11/No. 1
4. Proto, T., E. Schoepke, L. Etchinson, T. O'Brien, B. Hernon, K. Perry, and M. Peterson. 2000. Production of High Purity Water from Seawater. Proc. 2000 North American Biennial Conference of the American Desalting Association. South Lake Tahoe, Nevada.
5. Seacord, T.F., S. Dundorf, and J. MacHarg. Affordable Desalination Collaboration 10 mgd Conceptual Case Study. Proc. 2007 AMTA Conference. Las Vegas, Nevada.
6. *Water Sources Powering Southern California*, by Robert C. Wilkinson Ph.D., January 2004.
7. *Water and Desalination Report*, vol 41, #42, These prices represent the volumetric price of water, including taxes, for domestic consumers using less than 15 m^3 per month.

© Naples Marco Island
Everglades CVB

SERVING AND PROMOTING MEMBRANE TREATMENT OPERATIONS

SEDA

WWW.AMTAORG.COM

AMTA

American Membrane Technology Association

Improving America's Waters through Membrane Filtration and Desalting

America's Authority in Membrane Treatment

2008 JOINT CONFERENCE & EXPOSITION

MEMBRANE WEEK

JULY 14-17 2008

The two largest membrane associations in America present a joint conference for Managers and Operators under one roof!

Naples, Florida

SUPPORTING AFFILIATIONS:

IDA
International Desalination Association

SWMOA

SOUTH CENTRAL MEMBRANE ASSOCIATION

© Naples Marco Island Everglades CVB/JoNell Modys

7:30 am - 7:30 pm	**Registration**	
	8:00 am - 12:00 pm **Pre-Conference Workshop 1** **AMTA/ADC -** **Desalination Technology Developments and Improvements**	**9:00 am - 4:00 pm** **Pre-Conference Workshop 2** **AMTA/NWRI -** **Membrane Bioreactors (MBRs)** Moderator: Jeff Mosher, National Water Research Institute
	8:00 - 8:15 **Introduction & Opening Remarks** Randy Truby, Affordable Desalination Collaboration **8:15 - 9:45** **Session 1 - Latest Developments and Updates** Moderator: John MacHarg, Affordable Desalination Collaboration **8:15 - 8:45** **California SWRO Update** Paul Shoenberger, P.E., West Basin Municipal Water District **8:45 - 9:15** **Latest Developments in Pump and Energy Recovery Technologies** Nikolay Voutchkov, P.E., D.E.E., Poseidon Resources Corp. **9:15 - 9:45** **Status of U.S. Desalination Research** Kevin Price, U.S. Bureau of Reclamation **9:45 - 10:00** Break **10:00 - 12:00** **Session 2 - Test Results & Methods 4 Manufacturers x 11 Membranes** Moderator: Tom Seacord, P.E., Carollo Engineers, P.C. **10:00 - 10:20** **FilmTec Membrane Test Results** Steven Coker, The Dow Chemical Company/ FilmTec Corporation **10:20 - 10:40** **Koch Membrane Test Results** Rick Lesan, Koch Membrane Systems, Inc. **10:40 - 11:00** **Toray Membrane Test Results** Victor Verbeek, Toray Membrane USA, Inc. **11:00 - 11:20** **Hydranautics Membrane Test Results** Paige Gourley, Hydranautics **11:20 - 12:00** **Technical Panel: Where are the Next Technological Improvements?** Panel: Nikolay Voutchkov; John MacHarg; Tom Seacord	**9:00 - 9:15** **Introductions & Opening Remarks** Jeff Mosher, NWRI **9:15 - 10:00** **Membrane Technology Fundamentals** Speaker to be determined **10:00 - 10:30** **Biotreatment Fundamentals** Speaker to be determined **10:30 - 10:45** Break **10:45 - 11:30** **Fouling and Fouling Control** Speaker to be determined **11:30 - 12:15** **MBR Design Prinicpals** Speaker to be determined **12:15 - 1:15** **Lunch** **1:15 - 1:45** **Commerical Technologies** Speaker to be determined **1:45 - 2:15** **Manufacturers' Panel** Speakers to be determined **2:15 - 2:45** **MBR Case Study for Reuse Application** Speaker to be determined **2:45 - 3:00** Break **3:00 - 3:30** **MBR Case Study & Operational Aspects** Speaker to be determined **3:30 - 4:00** **Open Discussion and Wrap-Up** Jeff Mosher, NWRI
10:00 am - 3:00 pm	**Exhibit and Poster Set-Up**	
12:00 pm - 4:00 pm	**SEDA Board of Directors Meeting**	
1:30 pm - 4:30 pm	**Facility Tour 1 (FT-1):** **Collier County South Plant - 32mgd** **(Conventional Lime-12/RO-20)**	**Facility Tour 2 (FT-2):** **Collier County North Plant - 20mgd** **(NF-12/RO-8)**
4:00 pm - 6:30 pm	**Exhibit Hall Open - Welcome Reception & Social**	

Tuesday, July 15, 2008

7:30 am - 7:00 pm	**Registration**		
7:30 am - 12:00 noon	**Exhibit Hall Open**		
8:00 am - 10:00 am	**Opening Session** Moderators: Steve Duranceau, Ph.D., P.E., University of Central Florida/AMTA Program Chair; Chris Kuzler, P.E., King Engineering Associates, Inc./SEDA Program Chair; C. Robert Reiss, Ph.D., P.E., Reiss Environmental, Inc. **Keynote Speakers:** **Charlie Crist, Governor, State of Florida - Invited** **Burt Saunders, State Senator, State of Florida - Invited** **Bill Barnett, Mayor, City of Naples - Invited** **Charles Dauray, Board Member, South Florida Water Management District** **James Mudd, County Manager, Collier County Public Utilities** **AMTA/SEDA Welcome:** David Brown, AMTA President Jill Hudkins, SEDA President **2007/2008 AMTA/NWRI Fellowship Winners:** Kendra Colyar, University of Colorado at Boulder Eva Steinle-Darling, Stanford University		
10:00 am - 10:30 am	**Refreshment Break - Exhibit Hall**		
10:30 am - 12:00 pm	**Session T-1A** **Planning, Policy & Financial Considerations** Moderator: Michael Gabaldon, U.S. Bureau of Reclamation	**Session T-1B** **Membrane Plant Basics** Moderator: Lynn Stevens, City of Clearwater	**Session T-1C** **Membrane Solutions** Moderator: Lance Littrell, Reiss Environmental, Inc.
	Desalination Planning in Multi-Agency Situations Matt Van Horne, RMC Water and Environment	**Review of the Basics for Planning a Membrane Plant** Ben Movahed, P.E., WATEK Engineering Corporation	**Evaluation of Dynamic Energy Consumption of UF, RO & MBR Processes** YuJung Chang, HDR Engineering, Inc.
	The Australian SWRO Experience and Lessons Learned for the US Brent Alspach, Malcolm Pirnie, Inc.	**Design, Operation and Maintenance of Ideal Reverse Osmosis Plants** Robert Ning, King Lee Technologies	**Integrated Membrane Solutions Applied to the Challenges of Seawater Desalination** Rich Franks, Hydranautics
	Electric Utility Joint Action, An Idea for the Water Industry Bruce Holmes, P.E., Holmes Enterprises	**Membrane Technologies: Past, Present, Future** Val Frenkel, Kennedy/Jenks Consultants	**City of North Port "Looking Into the Future"** Jerry Manning, City of Northport
12:00 noon - 2:00 pm	**Awards Luncheon** Moderators: Stuart McClellan, AMTA Awards Chair and Bill Lazenby, SEDA Awards Chair		

Thank You Platinum Sponsors

Affordable Desalination Collaboration

Doosan Hydro Technology, Inc.

Pump Engineering, Inc.

Siemens Water Technologies Corp.

July 14-17, 2008 AMTA/SEDA Exhibit Hall

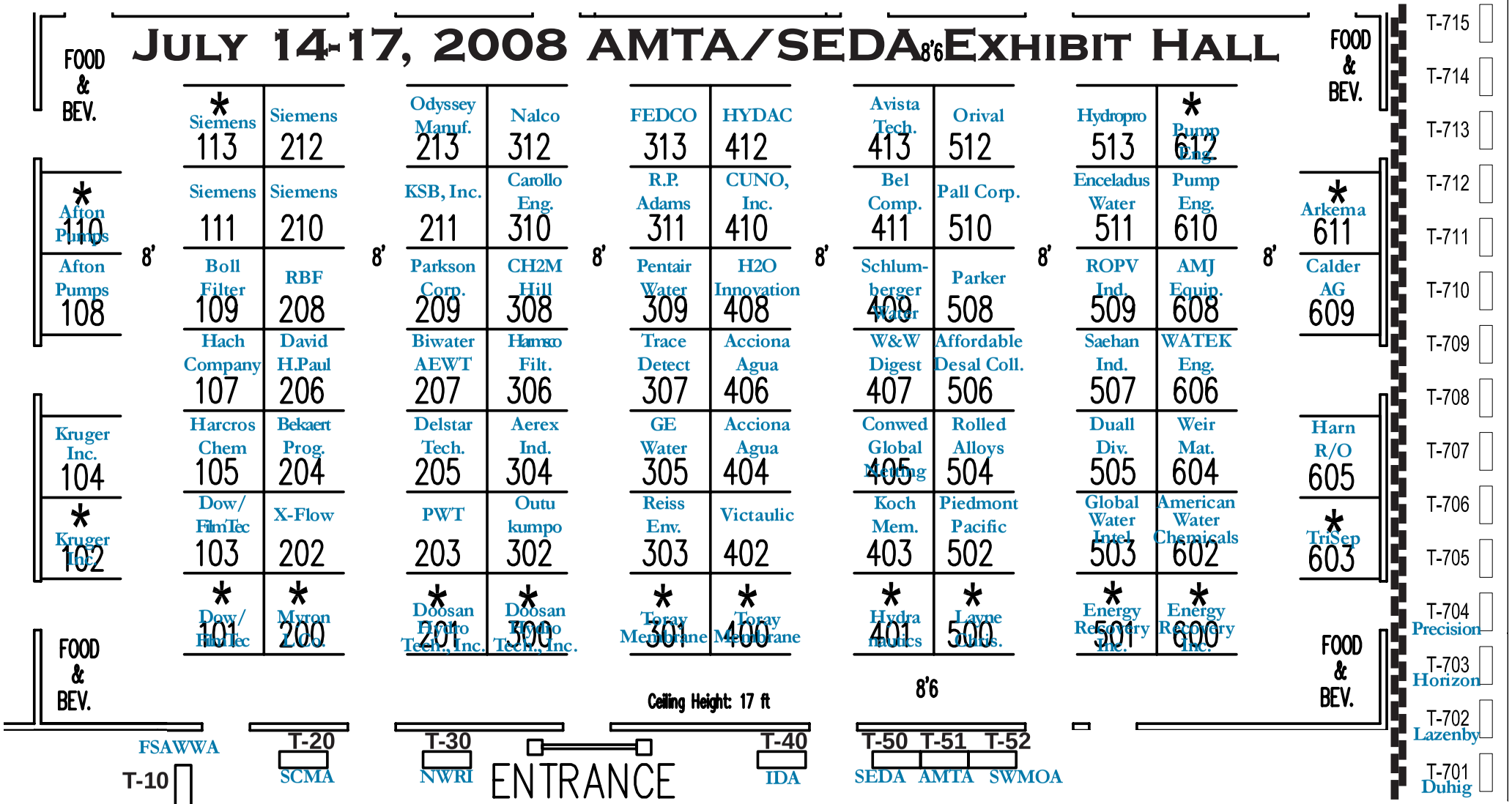

Booth #	Company
404 & 406	Acciona Agua
304	Aerex Industries, Inc.
506	Affordable Desalination Collaboration
108 & 110	Afton Pumps, Inc.
T-51	American Membrane Technology Association (AMTA)
602	American Water Chemicals, Inc.
608	AMJ Equipment Corp.
611	Arkema, Inc.
413	Avista Technologies, Inc.
204	Bekaert Progressive Composite
411	Bel Composite America, Inc.
207	Biwater AEWT
109	Boll Filter
310	Carollo Engineers, P.C.
308	CH2M Hill
405	Conwed Global Netting Solutions
410	CUNO, Inc.
206	David H. Paul, Inc.
205	Delstar Technologies, Inc.
201 & 300	Doosan Hydro Technology, Inc.
505	Duall Division/Met-Pro Corporation
T-701	Duhig Stainless, Inc.
511	Enceladus Water Group, LLC
501 & 600	Energy Recovery, Inc.
313	Fluid Equipment Development Co.
T-10	FS/AWWA

Booth #	Company
305	GE Water & Process Technologies
503	Global Water Intelligence
408	H2O Innovation/Membrane System Corporation
107	HACH Company
105	Harcros Chemicals, Inc.
306	Harmsco Filtration Products
605	Harn R/O Systems, Inc.
T-703	Horizon Environmental Engineering, Ltd.
412	HYDAC International
401	Hydranautics
513	Hydropro, Inc.
T-40	International Desalination Association (IDA)
403	Koch Membrane Systems, Inc.
102 & 104	Kruger Inc.
211	KSB, Inc.
500	Layne Christensen Company
T-702	Lazenby & Associates
200	Myron L Company
T-30	National Water Research Institute (NWRI)
312	Nalco Company
213	Odyssey Manufacturing Company
512	Orival, Inc.
302	Outokumpo Stainless, Inc.
510	Pall Corporation
508	Parker

Booth #	Company
209	Parkson Corporation
309	Pentair Water - Codeline
502	Piedmont Pacific Corporation
T-704	Precision Control Product Services, LLC
203	Professional Water Technologies, Inc.
610 & 612	Pump Engineering, Inc.
208	RBF Consulting
504	Rolled Alloys
509	ROPV Industry Development Center
311	R. P. Adams Company, Inc./Chem-Quip, Inc.
507	Saehan Industries, Inc.
409	Schlumberger Water Services USA, Inc.
111, 113, 210, 212	Siemens Water Treatment Corporation
T-20	South Central Membrane Association (SCMA)
T-50	Southeast Desalting Association (SEDA)
T-52	Southwest Membrane Operator Association (SWMOA)
101 & 103	The Dow Chemical Co./FilmTec Corp.
301 &400	Toray Membrane USA, Inc.
307	TraceDetect, Inc.
603	TriSep Corporation
402	Victaulic
606	WATEK Engineering Corporation
407	Water & Waste Digest
604	Weir Materials and Foundries
202	X-Flow North America

Salutation	First Name	Mid Initial	Last Name	Suffix	Title	Organization
Dr.	Peter	EM	Aerts		Application Development Leader	The Dow Water Solutions R&D
Mr.	Miguel		Arroyo		Water & Wastewater Treatment Manager	City of Fort Lauderdale
Mr.	Jorge		Atoche		Assistant Engineer	Hazen and Sawyer, P.C.
Mr.	Russ		Bacon		Applications Engineer	Crane Environmental
Mr.	Upen		Bharwada			
Mr.	Bradley		Bohnsack		WPO I	City of Dunedin Water Treatment Plant
Mr.	Tim		Brodeur		Principal Engineer	Boyle Engineering Corporation
Mr.	Daniel		Brooke Peig			
Mr.	David	L.	Brown		Director of Utilities	Town of Jupiter
Mr.	Kevin		Carlson		Sales Manager	Synder Filtration
Mr.	Bill		Chapin		Purchasing Manager	ITT Flowtronex
Mr.	John	W.	Countz		Overseas Operations Manager	Consolidated Water Company, LTD
Mr.	Larry		Cypress		Reverse Osmosis Lead Operator	Newport News Waterworks
Mr.	Glenn		Daniel		Water Superintendent	City of Clearwater
Mr.	Erik	D.	Desormeaux	P.E.	Environmental Engineer	CDM
Mr.	Robert	J.	Donofrio		Sales Manager	Pentair Water - Codeline
Mr.	Manuel		Garcia de la Mata			
Mr.	Charles		George		Lead Operator	City of Ormond Beach
Mr.	Mageed		Guirguis		Estimator	Doosan Hydro Technology
Ms.	Andrea		Hayden		Vice President - Risk Management	Water Standard
	Hyukjai		Heo			Doosan Hydro Technology, Inc.
Mr.	Kenneth	R.	Herd		Water Supply Program Director	Southwest Florida Water Management District
Dr.	Keith		Hirsch			
Mr.	Todd		Horman		Account Manager	BWA Water Additives
Mr.	Rick		Ide		Product Manager/Hollow Fiber Membranes	Graver Technologies, LLC
Mr.	Shinjiro		Kanaya			
Mr.	Ernie	O.	Kartinen	Jr., P.E.	Vice President	Boyle Engineering Corporation
Mrs.	Karla	J	Kinser	P.E.	National Membrane Technology Practice Leader	MWH Americas, Inc.
Ms.	Mary	L.	Kronenberg		Project Manager	City of Palm Coast
Ms.	Jane		Kucera			NALCO Company
Mr.	Jeff		Lashinski		Design Engineer	Synder Filtration
	Jinwon		Lee			Doosan Hydro Technology, Inc.
Mr.	Cesar		Lopez	Jr.	Senior Water Resources Specialist	San Diego County Water Authority
Dr.	William	A.	Lovins	III, Ph.D., I	Associate Engineer	Boyle Engineering Corporation
Mr.	Steve		Malloy	P.E.	Principal Engineer, Capital Projects	Irvine Ranch Water District
Mr.	Chris	J.	Martin	P.E.	Principal Chemical Engineer	Boyle Engineering Corporation
Mr.	Thomas	M.	Mayer			Sandia National Labs
Mr.	Wayne		Miller			
Mr.	Patrick	J.	Nailos		WRF Supervisor	City of Oldsmar
Mr.	James	L	Naylor		Project Manager	Alan Plummer Associates, Inc.
Mr.	Rafael		O'Pelaez		Production Manager	Ocean Conversion (Cayman) Limited
Mr.	Victor		Pedlar		Water Operations Supervisor	City of Plantation
Mr.	Larry		Pelegrin		Vice President, Strategic Business Development	Hydranautics
Mr.	Jesus		Pino			
Mr.	John	E.	Potts		Senior Vice President	Kimley-Horn & Associates, Inc.
Mr.	Gary		Prae		Senior Applications Engineer	ITT Water Equipment Technologies
Ms.	Bonita		Preston		Reliability Engineer	Pratt & Whitney Rocketdyne
Mr.	Jordan		Ramer		Director of Corporate Development	NanoH2O
Mr.	Harold		Reed	P.E.	Environmental Engineer	American Water
Mr.	Sandeep		Sethi	PE	Senior Project Engineer	Carollo Engineers, P.C.
Mr.	Avinash		Shekhar		Staff Engineer	CH2M Hill, Incorporated
Ms.	Karlene		Singh		Project Engineer	DesalCo Ltd. Subsidiary of Consolidated Water Company, Ltd.
Mr.	Bill		Snow	P.E.	Principal Engineer	Boyle Engineering Corporation
Mr.	Martin		Sow		Mechanical Estimator	Doosan Hydro Technology
Dr.	Richard		Stover	Ph.D.	Chief Technical Officer, VP of Eng. & Research	Energy Recovery, Inc.
Mr.	Alejandro	J.	Sturniolo		Marketing Manager	Unitek, S.A.
Mr.	Masahide		Taniguchi		Manager of Water Technology Center	Toray Industries, Inc.
Mr.	Matthew	M.	Thompson		Project Engineer	Consolidated Water Company Ltd.
Mr.	Philippe		Tob			
Mr.	Matthew	P.	Van Horne			
Mr.	Tom		Vanden Heuvel		General Manager	ITT Corporation
Mr	Jeffrey	H	Yeh		Vice President of Sales	Synder Filtration
	Wonkyu		Yim			Doosan Hydro Technology, Inc.
Mr.	Jianhui		Zhou			
Mr.	Curt		Brown		Director, Research and Development Office	U.S. Bureau of Reclamation
Mr.	Steven	D.	Coker		Municipal Technical Leader	The Dow Chemical Company/FilmTec Corporation
Ms.	Paige		Gourley		Manager, Proposals and Contracts	Hydranautics
Mr.	Rick	K.	Lesan		Director RO/NF Tech Center	Koch Membrane Systems, Inc.
Mr.	John	P.	MacHarg		Managing Director	Affordable Desalination Collaboration
Mr.	Tom		Seacord	P.E.	Project Manager	Carollo Engineers, P.C.
Mr.	Marc		Serna		Manager of Engineering	West Basin Municipal Water District
Mr.	Randy	L.	Truby		CEO	Toray Membrane USA, Inc.
Mr.	Victor		Verbeek		Business Development Manager	Toray Membrane USA, Inc.
Mr.	Nikolay	S.	Voutchkov	P.E.,D.E.E	Senior Vice President	Poseidon Resources Corp.

Quarterly Technical Progress Report
Covering Period October 1, 2008 to December 31, 2008
Date of Report 10-6-09

Agreement Number:	4600007440
Subject:	Prop 50 II Desal 46-7440 P-04 ADC
DWR ID Number:	n/a Department of Water Resources Office of Water Use Efficiency 901 P Street, Third Floor Sacramento, CA 95814
Project Title:	Optimizing Seawater Reverse Osmosis for Affordable Desalination
Recipient Organization:	Affordable Desalination Collaboration 2419 E. Harbor Blvd, #173 Ventura, CA 93001
Partners:	See attached membership list.
Contact Person:	John MacHarg 2419 E. Harbor Blvd, #173 Ventura, CA 93001 Tel: 650-283-7976 Fax: 805-658-8060 e-mail: jmacharg@affordabledesal.com
Date Submitted:	10-6-09

_____
Signed, Reviewed by designated representative

1. **Project Objective:** The objectives of the Affordable Desalination Collaboration (ADC) are to demonstrate affordable, reliable and environmentally responsible reverse osmosis desalination technologies and to provide a platform by which cutting edge technologies can be tested and measured for their ability to reduce the overall cost of the seawater reverse osmosis (SWRO) treatment process.

2. **Project Description / Background:** A key challenge facing the seawater desalination industry today is to develop a new generation of reverse osmosis (RO) plants that deliver high-quality, fresh water at a reduced economic and environmental cost. The key to achieving these goals is to address the most

expensive and environmentally taxing component of operating a desalination system: energy.

The ADC was formed in 2004 to fund and execute the first part of a multiple phase Affordable Desalination Demonstration Project. The ADC members are a group of leading government agencies, municipalities, RO manufacturers, consultants and professionals partnering together to help reduce the costs associated with desalination.

The first phase of the project, ADC I, built and operated a demonstration plant at the United States Navy's Seawater Desalination Test Facility in Pt. Hueneme, California. The plant utilized a combination of proven technologies developed primarily in the U.S. and California to demonstrate that seawater desalination can be optimized to make it technically and economically viable. ADC I achieved remarkable results by desalinating seawater at energy levels between 6.0-6.9 kWh/kgal (1960-2250 kWh/acre-ft). On average, these numbers make the power for desalination comparable to the power required for the State Water and the Colorado River Aqueduct projects and they are approximately 35% lower than experts had been projecting for seawater desalination. For the approximate 100 mgd of proposed seawater desalination projects in Southern California alone, this 35% savings equates to approximately 140,000 Mega Watt hours in energy savings per year.

This second phase (ADC II) will pursue the following demonstration, and development programs.

a. Test and demonstrate additional manufacturers' membranes through a protocol similar to Phase I.
b. Test and demonstrate DOW FILMTEC's next generation "hybrid-membrane".
c. Develop and demonstrate new process designs that are possible as a result of the isobaric energy recovery technologies. We will use the ADC pilot system to test and demonstrate these new flow schemes in order to push the recoveries above 50%, while still maintaining good water quality and low energy performance.
d. Test and demonstrate ZENON ultra-filtration technology ahead of our ADC pilot system. This portion of the test should build on and compliment the other pre-filtration studies that are taking place in the region.
e. Test and demonstrate Ocean Pacific Technology's (OPT) Axial Piston Pressure Exchanger (AP^2X) pump technology.

Below are the additional test items related to our no-cost extension request dated 7-23-08

f. Re-run Toray test due to un-explained step change reduction in performance during first test.

g. Test and demonstrate additional set of DOW-FILMTEC - SW30XHR-400i high boron rejection membranes to demonstrate better water quality and higher Boron rejection than previously tested DOW membranes.
h. Test and demonstrate additional set of high rejection Koch membranes to demonstrate better water quality than previously tested Koch Membranes.
i. Test and demonstrate Amiad's Micro Fiber pre-filtration technology that promises to reduce the cost and foot print compared to current media filter and advanced filtration technologies.
j. Test and demonstrate new X-pump and energy recovery technology that promises significant energy reductions for medium sized SWRO systems and will be simpler to apply and operate compared to traditional pump and isobaric technologies.

Thus far we have completed the four sets of manufacturers' membrane testing that including the Toray TM800C membrane test and retest (Task 2 and 6), the Koch 2822HF-400 membrane test (Task 3) and the Hydranautics SWC5 membrane (Task 4) and the DOW-FIMTEC Hybrid (Task 5). In addition we have completed testing of the DOW-FILMTEC - SW30XHR-400i high boron rejection membranes, extension request item g above.

- Start Date of Contract: April 2, 2007
- End Date of Contract: June 30, 2010 (request 7-23-08 extension date)

3. Progress and Status:

During Q4-08 we tested the DOW FILMTEC - SW30XHR-400i high boron rejection membranes as part of an extension item to our original test protocol. We continued to operate and demonstrate the Zenon 1000 system and accumulated 1460 operating hours on that system. High, low and average SDI from the Zenon unit during this period was 3.4, 1.2 and 2.5 respectively.

A table comparing the most affordable points of all the membranes tested thus far including 3 sets of FILMTEC (tested in ADC I), Toray, Koch, FILMTEC ISD-Hybid and Hydranautic's is provided below.

Most Affordable Point Performance and Data

Mfgr	Rec %	Flux gfd	RO Process kWh/m3 (kWh/kgal)	TDS mg/l	Boron mg/l	Total Treatment Costs $/acre-ft (3)	Temp ºF	Feed ktds
FILMTEC (1) SW30HR-380	50	7.5	7.75	129	0.65	978	63	34.69
FILMTEC (1) SW30XLE-400i	49	9.0	6.92	231	1.12	922	57	34.69
FILMTEC (1) SW30HRLE-400i	49	7.5	7.54	148	0.85	968	54	35.29
Koch TFC 2822HF-400	50	8.9	7.32	307	1.4	934	63	34.91
Hydranautics SWC5	49	10.0	7.78	84	0.64	945	56	36.16

FILMTEC ISD-Hybrid	51	9.0	7.56	258	1.0	948	54	36.62
Toray TM800E-400	51	7.5	7.40	158	0.71	958	62	36.41
FILMTEC - SW30XHR-400i high boron rejection	51	9.0	8.16	90	0.43	966	60	33.49

Notes: 1. Data from ADC I test where FILMTEC membranes were used exclusively. 2. The testing was performed consecutively through varying water quality conditions and should not be considered as side by side testing. The following results provide an approximate bench mark for SWRO energy consumption for Southern California and reveal general trends in membrane performance.

4. **Percent Complete of Total Project:** ~ 48 %

5. **Deliverables:**

Trade Show/Conference/Publication	Date(s)	Author(s)	Presenter	DWR Submittal
Water Scarcity UNESCO UC Irvine	Dec-2008	John MacHarg	John MacHarg	Q4-08
ADC Base Lines SWRO System Performance, Water and Desalination Report	September 2008	John MacHarg, Tom Seacord, Bradley Sessions	n/a	Q3-08
Joint ADC-AMTA-SEDA workshop, Annual Conference, Naples, FL	July 2008	ADC-AMTA-SEDA	Various	Q3-08
ADC Completes Profile of SWRO Press Release	March 28, 2008	ADC	n/a	Q1-08
IDA World Conference, Gran Canaria, ADC II Update	October 21-26, 2007	Stephen Dundorf, Thomas F. Seacord, John MacHarg	Stephen Dundorf	Q3-07
Desalination and Water Reuse (DWR) Quarterly, Innovative Designs to be Tested in ADC II	Aug/Sept-07	John P. MacHarg	n/a	Q3-07
AMTA 2007 Annual Conference, Las Vegas, ADC I 10 mgd Application	July 23-27, 2007	Bradley Sessions, Tom Seacord, P.E.	Tom Seacord	Q2-07
AWWA Membrane Technology Conference, Tampa Florida, Collier County results	March 18-21, 2007	Brandon Yallaly, P.E., Tom Seacord, P.E., Steve Messner	Brandon Yallaly	Q2-07

6. **Expenditures:** See next page.

Affordable Desalination Collorboration
State of California Water Board Report
Quarter ending December 31, 2008

	Budgetary Category	Balances September 30, 2008				Balances October 1, 2008			Q 4-2008 Expenditures			Balances December 31, 2008		
		Non State Share	State Share (Grant)	Total Project Costs	Extension Revisons 7/23/08	Non State Share	State Share (Grant)	Total Project Costs	Non State Share	State Share (Grant)	Total Project Costs	Non State Share	State Share (Grant)	Total Project Costs
	(I)	(II)	(III)	(IV) = (II+III)		(II)	(III)	(IV) = (II+III)	(II)	(III)	(IV) = (II+III)	(II)	(III)	(IV) = (II+III)
(a)	Administration													
	Salaries, wages	$ -	$ 32,613	$ 32,613	$130,000	$ -	$162,613	$ 162,613		$ 34,500	$ 34,500	$ -	$128,113	$ 128,113
	Fringe benefits	$ -	$ (10,885)	$ (10,885)	$70,000	$ -	$59,115	$ 59,115		$ 11,702	$ 11,702	$ -	$ 47,413	$ 47,413
	Supplies	$ -	$ 36,826	$ 36,826	($31,500)	$ -	$5,326	$ 5,326			$ -	$ -	$ 5,326	$ 5,326
	Equipment	$ -	$ 6,000	$ 6,000	($5,000)	$ -	$1,000	$ 1,000			$ -	$ -	$ 1,000	$ 1,000
	Consulting services	$ (25,000)	$ 47,000	$ 22,000	($40,000)	$ (25,000)	$7,000	$ (18,000)			$ -	$ (25,000)	$ 7,000	$ (18,000)
	Travel	$ (3,027)	$ 12,026	$ 8,999	($10,000)	$ (3,027)	$2,026	$ (1,001)		$ 614	$ 614	$ (3,027)	$ 1,412	$ (1,614)
(b)	Planning/design/engineering	$ (10,500)	$ 14,404	$ 3,904	($12,000)	$ (10,500)	$2,404	$ (8,096)			$ -	$ (10,500)	$ 2,404	$ (8,096)
(c)	Equipment purchases/Rentals/Rebates/Vouchers	$ 4,250	$ 12,763	$ 17,013	($11,000)	$ 4,250	$1,763	$ 6,013			$ -	$ 4,250	$ 1,763	$ 6,013
(d)	Materials/Installation/Implementation	$ 69,000	$ 11,903	$ 80,903	($11,000)	$ 69,000	$903	$ 69,903			$ -	$ 69,000	$ 903	$ 69,903
(e)	Implementation verification	$ 7,500	$ 8,000	$ 15,500	($5,500)	$ 7,500	$2,500	$ 10,000			$ -	$ 7,500	$ 2,500	$ 10,000
(f)	Project legal/License/Insurance fees	$ -	$ 45,000	$ 45,000	($42,500)	$ -	$2,500	$ 2,500			$ -	$ -	$ 2,500	$ 2,500
(g)	Structures	$ -	$ -	$ -	$-	$ -	$0	$ -			$ -	$ -	$ -	$ -
(h)	Land Purchase/Easement	$ -	$ -	$ -	$-	$ -	$0	$ -			$ -	$ -	$ -	$ -
(i)	Environmental Compliance/Mitigation/Enhancement	$ -	$ -	$ -	$-	$ -	$0	$ -			$ -	$ -	$ -	$ -
(j)	Construction	$ -	$ -	$ -	$-	$ -	$0	$ -			$ -	$ -	$ -	$ -
(k)	Other (Operating Cash)	$ 335,000	$ -	$ 335,000	$-	$ 335,000	$0	$ 335,000			$ -	$335,000	$ -	$ 335,000
(l)	Operation, monitoring and assessment	$ -	$ 88,751	$ 88,751	$50,000	$ -	$138,751	$ 138,751		$ 37,791	$ 37,791	$ -	$100,960	$ 100,960
(m)	Report preparation	$ 2,000	$ 2,500	$ 4,500	$-	$ 2,000	$2,500	$ 4,500			$ -	$ 2,000	$ 2,500	$ 4,500
(n)	Outreach and information sharing	$ 32,188	$ -	$ 32,188	$-	$ 32,188	$0	$ 32,188	$ 18,175		$ 18,175	$ 14,013	$ -	$ 14,013
(o)	Subtotal	$ 411,411	$306,901	$ 718,312		$ 411,411	$306,901	$ 718,312	$ 18,175	$ 84,607	$102,782	$393,236	$303,794	$ 697,030
(p)	Overhead (8%)	$ -	$120,848	$ 120,848	($70,000)	$ -	$50,848	$ 50,848		$ 6,769			$ 44,079	$ 44,079
(q)	Contingency (10%)	$ -	$ 30,379	$ 30,379	($11,500)	$ -	$18,879	$ 18,879		$ -			$ 18,879	$ 18,879
(r)	Total (o+p+q)	$ 411,411	$458,128	$ 869,539	$-	$ 411,411	$458,128	$ 869,539	$ 18,175	$ 91,375	$102,782	$393,236	$366,752	$ 759,989

7. **Schedule Status:** Through Q4-08 we have been operating on schedule.

8. **Plans for Next Quarter:** The ADC will begin the Unbalanced High Recovery portion of the project that will investigate high recovery operation above 50% RO recovery.

9. **Attachments:** n/a

All quarterly reports should be publicly disclosable and not contain confidential, proprietary or business sensitive information.

Task and % Complete Progress Table

Agreement Number	Starting Date:	Completion Date:	Quarter-Year	Report Number	PERCENT OF
4600007440	4.2.07	2.4.10	Q4-2008	7	
Grantee Agency Name: Affordable Desalination Collaboration		% Time Elapsed 55%	Total Grant Funds used $ 633,248	Grant funds this Qtr $ 91,375	
Name of Project: Optimizing Seawater Reverse Osmosis for Affordable Desalination					

TASKS	YEAR / MONTH	2008 Qtr 1	2008 Qtr 2	2008 Qtr 3	2008 Qtr 4	2009 Qtr 1	2009 Qtr 2	Project	Task Complete Last Report	Task Complete This Report	Project Complete
Task 1: Zenon 1000 pilot demonstration								12	10	20	4
Task 2: Toray low energy membrane demonstration		Complete						8	0	0	8
Task 3: Koch low energy membrane demonstration		Complete						12	0	0	12
Task 4: Hydranautics low energy membrane demonstration			Complete					8	0	0	8
Task 5: Dow-FILMTEC hybrid membrane demonstration				Complete				8	0	0	8
Task 6: TorayTM800C low energy membrane demonstration (re-test)				Complete				8	0	0	0
Task 7: DOW FILMTEC high Boron rejection memb. demonstration						Complete		8	50	50	8
Task 8: Koch high rejection memb. demonstration		Canceled						7	0	0	0
Task 9: Unbalanced PX high recovery testing								10	0	0	0
Task 10: Interstage-PX hybrid high recovery testing		Canceled						9	0	0	0
Task 11: Demonstrate OPT's APX pump and energy recovery system								5	0	0	0
Task 12: Amiad Fiber Filter Test								5	0	0	0
Show Progress by Use of Bar Chart	**Scheduled =**							100			
	Completed =										48

Notse: 1. Since we have been operating significantly under budget, we have proposed (2/10/08) and received preliminary approval to add tasks 6, 7, 8, 11 and 12 to the task list. These additional items will extend the project schedule from the current December 2008 end date through Feb- 2010. The additional tasks and subsequent extension to the schedule will not result in an increase to the State Share/grant ie. no cost extension.

Schedule

Proposed/Draft Project Schedule

ID	Task Name	Duration	Start	Finish
1	Agreement development	168 days	Tue 8/1/06	Thu 3/22/07
2	Final agreement signed	5 days	Fri 3/23/07	Thu 3/29/07
3	Project begins	1 day	Mon 4/2/07	Mon 4/2/07
4	**TorayTM800C low energy membrane demonstration**	**51 days**	**Mon 4/30/07**	**Mon 7/9/07**
5	Install Toray TM800C Membranes	2 days	Mon 4/30/07	Tue 5/1/07
6	TM800C Ripening period	15 days	Wed 5/2/07	Tue 5/22/07
7	TM800C 9 flux and recovery points	18 days	Wed 5/23/07	Fri 6/15/07
8	TM800C Most affordable point	15 days	Mon 6/18/07	Fri 7/6/07
9	Complete Toray TM800C testing	1 day	Mon 7/9/07	Mon 7/9/07
10	Submit project update report to DWR	5 days	Mon 7/9/07	Fri 7/13/07
11	**Koch low energy membrane demonstration**	**88 days**	**Tue 7/10/07**	**Thu 11/8/07**
12	Install membranes	2 days	Tue 7/10/07	Wed 7/11/07
13	Ripening period	20 days	Thu 7/12/07	Wed 8/8/07
14	9 flux and recovery points	30 days	Thu 8/9/07	Wed 9/19/07
15	Most affordable point	35 days	Thu 9/20/07	Wed 11/7/07
16	Complete Koch testing	1 day	Thu 11/8/07	Thu 11/8/07
17	Submit project update report to DWR	5 days	Mon 9/17/07	Fri 9/21/07
18	Innovative PX flow schemes work shop	2 days	Thu 11/8/07	Fri 11/9/07
19	**Hydranautics low energy membrane demonstration**	**78 days**	**Fri 11/9/07**	**Tue 2/26/08**
20	Install membranes	2 days	Fri 11/9/07	Mon 11/12/07
21	Ripening period	20 days	Tue 11/13/07	Mon 12/10/07
22	9 flux and recovery points	25 days	Tue 12/11/07	Mon 1/14/08
23	Most affordable point	30 days	Tue 1/15/08	Mon 2/25/08
24	Complete Hydranautics testing	1 day	Tue 2/26/08	Tue 2/26/08
25	Submit project update report to DWR	4 days	Mon 1/21/08	Thu 1/24/08
26	**Zenon 1000 Pilot Demonstration**	**473 days**	**Mon 3/3/08**	**Wed 12/23/09**
27	Install and test Zenon System	18 days	Mon 3/3/08	Wed 3/26/08
28	Operate and monitor Zenon 1000 membrane pilot system	454 days	Thu 3/27/08	Tue 12/22/09
29	Complete Zenon testing	1 day	Wed 12/23/09	Wed 12/23/09
30	Submit project update report to DWR	4 days	Mon 3/17/08	Thu 3/20/08
31	**DOW Hybrid Membrane Demonstration**	**49 days**	**Wed 2/27/08**	**Mon 5/5/08**
32	Install DOW hybrid membranes	2 days	Wed 2/27/08	Thu 2/28/08
33	DOW Hybrid Ripening period	15 days	Wed 2/27/08	Tue 3/18/08
34	DOW Hybrid 9 flux and recovery points	18 days	Wed 3/19/08	Fri 4/11/08
35	DOW Hybrid Most affordable point	15 days	Mon 4/14/08	Fri 5/2/08
36	Complete DOW testing	1 day	Mon 5/5/08	Mon 5/5/08
37	Submit project update report to DWR	4 days	Mon 6/16/08	Thu 6/19/08
38	***TorayTM800C low energy membrane demonstration (re-test)***	***51 days***	***Tue 5/6/08***	***Tue 7/15/08***
39	***Install Toray TM800C Membranes***	***2 days***	***Tue 5/6/08***	***Wed 5/7/08***
40	***TM800C Ripening period***	***15 days***	***Thu 5/8/08***	***Wed 5/28/08***
41	***TM800C 12 flux and recovery points***	***18 days***	***Thu 5/29/08***	***Mon 6/23/08***
42	***TM800C Most affordable point***	***15 days***	***Tue 6/24/08***	***Mon 7/14/08***
43	***Complete Toray TM800C testing***	***1 day***	***Tue 7/15/08***	***Tue 7/15/08***

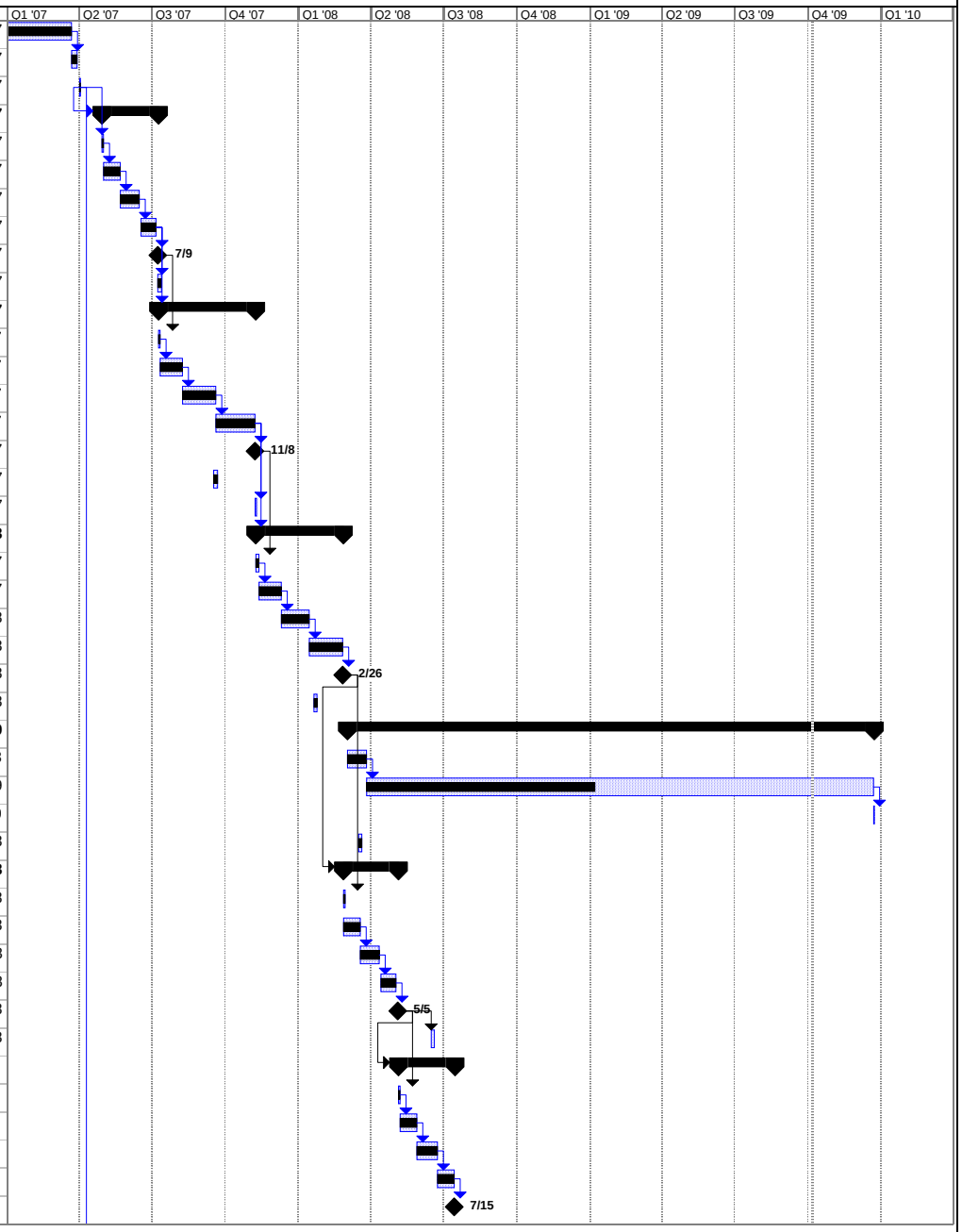

Project: ADC Proposed Project Schedu
Date: Tue 10/6/09

Task		Summary		Rolled Up Progress		Project Summary	
Progress		Rolled Up Task		Split		Group By Summary	
Milestone		Rolled Up Milestone		External Tasks		Deadline	

Proposed/Draft Project Schedule

ID	Task Name	Duration	Start	Finish
44	NFESC shutdown due to intake capacity issues	57 days?	Mon 7/14/08	Tue 9/30/08
45	***DOW FILMTEC high Boron rejection memb. demonstration***	***51 days***	***Wed 10/1/08***	***Wed 12/10/08***
46	***Install DOW FILMTEC SW30XHR-400i Membranes***	***2 days***	***Wed 10/1/08***	***Thu 10/2/08***
47	***DOW FILMTEC SW30XHR-400 Ripening period***	***15 days***	***Fri 10/3/08***	***Thu 10/23/08***
48	***DOW FILMTEC SW30XHR-400 12 flux and recovery points***	***18 days***	***Fri 10/24/08***	***Tue 11/18/08***
49	***DOW FILMTEC SW30XHR-400 Most affordable point***	***15 days***	***Wed 11/19/08***	***Tue 12/9/08***
50	***Complete FILMTEC SW30XHR-400 testing***	***1 day***	***Wed 12/10/08***	***Wed 12/10/08***
51	Submit project update report to DWR	4 days	Fri 8/15/08	Wed 8/20/08
52	ADC-AMTA Member workshop and progress report	1 day	Mon 7/14/08	Mon 7/14/08
53	**Unbalanced PX high recovery testing**	**76 days**	**Thu 12/11/08**	**Thu 3/26/09**
54	Install PX flow scheme membrane set	2 days	Thu 12/11/08	Fri 12/12/08
55	Flush and base line membranes	10 days	Mon 12/15/08	Fri 12/26/08
56	Execute unbalance test protocol @ 9 points	18 days	Mon 12/29/08	Wed 1/21/09
57	PX unbalanced most affordable point (24/7 for 2 months)	45 days	Thu 1/22/09	Wed 3/25/09
58	Clean membranes	2 days	Thu 2/19/09	Fri 2/20/09
59	Complete Unbalanced PX testing	1 day	Thu 3/26/09	Thu 3/26/09
60	Order long lead interstage-PX hybrid items	45 days	Fri 3/27/09	Thu 5/28/09
61	Submit project update report to DWR	4 days	Thu 1/15/09	Tue 1/20/09
62	Submit project update report to DWR	4 days	Mon 3/16/09	Thu 3/19/09
63	***Koch high rejection memb. Demonstration***	***51 days***	***Fri 3/27/09***	***Fri 6/5/09***
64	***Install Koch Membranes***	***2 days***	***Fri 3/27/09***	***Mon 3/30/09***
65	***Koch Ripening period***	***15 days***	***Tue 3/31/09***	***Mon 4/20/09***
66	***Koch 12 flux and recovery points***	***18 days***	***Tue 4/21/09***	***Thu 5/14/09***
67	***Koch Most affordable point***	***15 days***	***Fri 5/15/09***	***Thu 6/4/09***
68	***Complete Koch testing***	***1 day***	***Fri 6/5/09***	***Fri 6/5/09***
69	**Interstage-PX hybrid high recovery testing**	**86 days?**	**Mon 6/8/09**	**Mon 10/5/09**
70	Reconfigure system for Interstage-PX hybrid design	10 days	Mon 6/8/09	Fri 6/19/09
71	Execute interstage-PX hybrid protocol 18 points	30 days	Mon 6/22/09	Fri 7/31/09
72	Interstage-PX hybrid most affordable point (24/7 for 2 months)	45 days	Mon 8/3/09	Fri 10/2/09
73	Clean membranes	2 days	Mon 8/31/09	Tue 9/1/09
74	Complete Interstage-PX Hybrid testing	1 day?	Mon 10/5/09	Mon 10/5/09
75	Submit project update report to DWR	4 days	Mon 6/15/09	Thu 6/18/09
76	***Demonstrate OPT's X-pump and energy recovery system***	***55 days***	***Tue 10/6/09***	***Mon 12/21/09***
77	***Reconfigure system with X-pump and ER unit***	***10 days***	***Tue 10/6/09***	***Mon 10/19/09***
78	***Operate system through 40 hour "break-in" period***	***5 days***	***Tue 10/20/09***	***Mon 10/26/09***
79	***Demonstrate X-pump technology 24/5 for cumulative 500 hrs***	***25 days***	***Tue 10/27/09***	***Mon 11/30/09***
80	***Complete X-pump demonstration***	***15 days***	***Tue 12/1/09***	***Mon 12/21/09***
81	Submit project update report to DWR	4 days	Mon 8/17/09	Thu 8/20/09
82	Complete ADC Prop 50 testing	1 day	Tue 12/22/09	Tue 12/22/09
83	Write final report	30 days	Tue 12/22/09	Mon 2/1/10
84	Submit final report, billing, conclude project	2 days	Tue 2/2/10	Wed 2/3/10
85	Member/general workshop and publish results	2 days	Thu 2/4/10	Fri 2/5/10
86	Project Duration	743 days	Tue 4/3/07	Thu 2/4/10

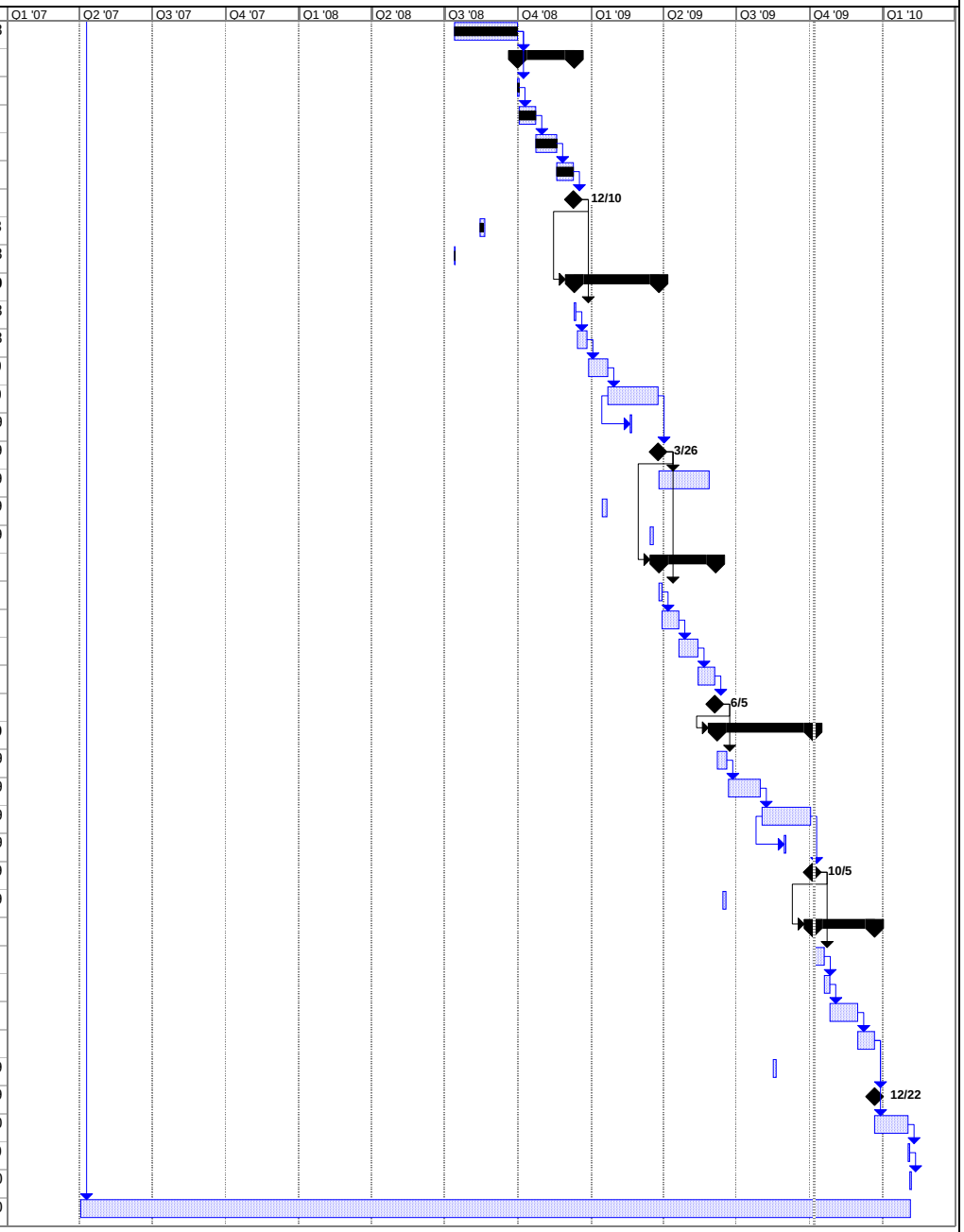

Project: ADC Proposed Project Schedu
Date: Tue 10/6/09

Task		Summary		Rolled Up Progress		Project Summary	
Progress		Rolled Up Task		Split		Group By Summary	
Milestone		Rolled Up Milestone		External Tasks		Deadline	

Attachments

1. Water Quality, Flow and Pressure and Power Data

Water Quality Data

TIME			pH			CONDUCTIVITY						TDS							TURBIDITY		SDI	BORON			OTHER					
		Operation		pH				Conductivity (mS/cm)						TDS (mg/L)					Turbidity (NTU)		Density Index		Boron (mg/L)			Inhibitor Pump	HP VFD	PX VFD	FEED VFD	
Date MM/DD/YY	Time hh:mm	Operation Time hh.hh	$pH_{F\text{-}sys}$ SC5	$pH_{P\text{-}sys}$ SC11	$pH_{C\text{-}sys}$ SC6	$C_{CF\text{-}out}$ SC3	$C_{F\text{-}PX\text{-}out}$ SC4	$C_{F\text{-}sys}$ SC5	$C_{P\text{-}sys}$ SC11	$C_{C\text{-}sys}$ SC6	$C_{C\text{-}PX\text{-}out}$ SC7	$TDS_{CF\text{-}out}$ SC3	$TDS_{F\text{-}PX\text{-}out}$ SC4	PX % Inc	$TDS_{F\text{-}sys}$ SC5	$TDS_{P\text{-}sys}$ SC11	$TDS_{C\text{-}sys}$ SC6	$TDS_{C\text{-}PX\text{-}out}$ SC7	$NTU_{MF\text{-}in}$ CART	$NTU_{CF\text{-}out}$ meter	$SDI_{CF\text{-}out}$ CART	$B_{CF\text{-}out}$ SC3	$B_{F\text{-}sys}$ SC5	$B_{P\text{-}sys}$ SC11	V_{TANK} (gallons)	Speed (gph)	Speed (Hertz)	Speed (Hertz)	Speed (Hertz)	Notes
Toray Membranes - TM800E-400												**Membrane Ripening Period**																		
05/30/07	11:25	4151.46	7.90	4.40	7.61	50.70	52.35	51.62	322.30	84.62	81.53	32.56	33.77	3.7%	33.23	154.20	60.80	57.95	nd	0.040	4.0	nd	nd	nd	7.0	60/75	44.85	33.08	61.20	
06/05/07	12:05	4199.43	7.88	6.77	7.73	49.81	53.23	51.63	353.50	84.01	82.22	31.88	34.41	7.9%	33.27	169.50	60.30	58.57	nd	0.057	4.0	nd	nd	nd	11.0	70/75	33.28	44.94	61.20	
06/06/07	10:56	4219.43	7.91	7.69	7.69	50.30	52.13	51.05	333.90	83.38	81.08	32.24	33.61	4.2%	32.84	159.80	59.75	57.53	nd	0.051	3.9	nd	nd	nd	8.0	70/75	44.92	33.13	61.20	bl
06/07/07	9:58	4240.04	7.73	6.01	7.6	50.13	52.25	51.10	328.80	83.46	81.03	32.16	33.67	4.7%	32.87	157.40	59.77	57.48	nd	0.044	3.6	nd	nd	nd	5.2	70/75	44.91	33.08	61.20	bl
06/11/07	12:08	4256.76	8.07	6.75	7.83	49.62	52.71	50.86	355.70	82.83	81.73	32.62	33.62	3.1%	32.73	170.80	59.72	57.68	1.852	0.067	4.0	nd	nd	nd	23.5	70/75	44.98	33.19	61.20	bv
06/12/07	9:51	4278.47	7.90	6.4	7.77	49.27	51.03	49.98	343.20	80.85	79.22	31.57	32.85	4.1%	32.10	164.40	57.44	55.84	1.345	0.086	3.7	nd	nd	nd	21.0	70/70	44.91	33.49	61.20	bl
06/13/07	12:00	4299.52	8.10	7.05	7.9	49.04	50.86	49.93	355.70	80.89	78.95	31.40	32.72	4.2%	32.06	170.30	57.39	55.57	0.933	0.093	4.1	nd	nd	nd	18.0	70/77	44.92	33.35	61.20	bv
06/14/07	9:15	4316.9	8.10	6.96	7.89	48.97	51.31	49.86	363.30	81.13	79.33	31.37	33.06	5.4%	32.04	174.20	57.62	55.92	0.961	0.095	4.1	nd	nd	nd	15.8	70/75	44.92	33.34	61.20	bv
												12 Point flux and recovery Period																		
06/19/07	10:30	4342.16	7.99	6.29	7.79	48.88	51.57	49.87	475.50	80.39	78.43	31.28	33.21	6.2%	32.03	229.30	57.01	55.18	1.056	0.067	3.4	nd	4.6	0.91	12.5	70/75	35.83	27.51	61.20	bl
06/20/07	10:31	4364.54	7.97	6.47	7.85	49.03	53.22	50.76	519.30	85.11	82.68	31.45	34.43	9.5%	32.73	251.10	61.44	59.01	1.122	0.092	3.9	nd	4.7	0.94	9.7	70/75	35.86	24.58	61.20	bl px out tds high. re-run point on 6-21
06/21/07	10:05	4386.46	7.87	6.39	7.77	48.78	51.86	49.95	453.00	83.80	80.41	31.23	33.42	7.0%	32.08	218.20	60.05	56.94	0.802	0.079	3.9	nd	4.6	0.88	7.5	70/75	35.85	25.02	61.20	bl
06/22/07	10:36	4410.98	7.73	5.96	7.57	48.86	51.73	49.91	492.80	87.71	82.49	31.30	33.35	6.5%	32.07	237.90	63.60	58.81	0.771	0.057	3.8	nd	4.6	0.95	24.3	70/75	36.08	22.45	61.20	bl
06/26/07	10:50	4433.05	7.79	5.91	7.66	48.83	51.12	49.78	371.80	80.13	78.28	31.27	32.94	5.3%	31.97	178.50	56.71	55.03	1.121	0.087	3.6	nd	4.8	0.80	21.8	70/75	45.19	34.07	61.20	bl
06/27/07	10:10	4454.51	7.91	6.22	7.72	48.81	51.39	49.91	397.80	84.82	82.69	31.26	33.11	5.9%	32.05	191.10	60.98	59.00	0.826	0.062	3.8	nd	4.7	0.81	18.5	70/75	45.20	29.77	61.20	bl
06/28/07	9:25	4476.05	7.96	6.32	7.75	48.85	51.71	49.99	429.60	88.34	85.65	31.30	33.35	6.5%	32.12	206.70	64.14	61.70	0.757	0.085	4.3	nd	4.7	0.86	15.8	70/75	45.19	27.13	61.20	bl
06/29/07	10:13	4497.56	8.02	6.14	7.83	48.63	51.44	50.06	307.40	81.49	80.02	31.15	33.15	6.4%	32.17	146.90	57.96	56.58	0.663	0.1	4.7	nd	4.7	0.67	12.6	70/75	54.01	38.91	61.20	bl
07/03/07	8:45	4520.82	7.93	6.03	7.78	48.84	51.07	49.63	335.80	84.83	82.52	31.27	32.88	5.1%	31.87	160.90	61.01	58.87	1.127	0.102	5.0	nd	4.7	0.74	9.7	70/75	53.99	34.69	61.20	bl
07/05/07	16:25	4527.33	8.12	7.84	7.88	49.18	52.07	50.38	385.80	90.10	87.82	31.54	33.59	6.5%	32.39	185.40	65.66	63.58	0.769	0.118	5.1	nd	4.3	0.79	9.0	50/70	53.99	31.14	61.20	bv
07/06/07	14:45	4532.55	8.13	6.59	7.87	49.05	50.73	49.99	290.70	81.29	79.88	31.46	32.65	3.8%	32.12	138.80	57.80	56.45	0.87	0.1	4.8	4.2	4.1	0.65	8.0	70/70	60.00	42.39	61.20	bv
07/09/07	13:50	4536.97	7.87	5.88	7.71	48.86	52.06	50.27	305.30	84.78	83.51	31.27	33.59	7.4%	32.27	145.80	60.93	59.72	1.383	0.082	4.3	nd	4.3	0.69	7.5	70/70	60.00	39.28	61.20	bl
07/10/07	16:40	4543.67	8.07	7.51	7.82	48.84	51.42	49.90	346.10	90.52	88.04	31.34	33.12	5.7%	32.06	165.80	66.15	63.79	1.204	0.142	4.9	nd	4.2	0.74	6.0	70/70	60.00	33.37	61.20	bv
												Most Affordable Point Period																		
07/24/07	17:25	4564.92	7.87	5.51	7.97	48.86	52.21	50.12	449.70	88.35	90.23	31.36	33.67	7.4%	32.23	216.60	65.88	64.07	0.889	0.074	3.8	nd	nd	0.95	25.8	70/70	54.70	30.56	60.17	bv
07/26/07	16:50	4591.4	7.84	5.98	7.85	48.85	51.69	49.95	460.50	90.25	88.03	31.30	33.38	6.6%	32.16	222.20	65.90	63.76	0.759	0.076	3.9	nd	nd	nd	21.9	70/70	54.67	30.21	60.95	bv
07/27/07	15:25	4607.78	7.94	5.82	7.78	48.84	51.86	50.11	425.50	90.00	88.08	31.30	33.47	6.9%	32.20	205.10	65.64	63.71	0.971	0.071	2.9	nd	5.3	nd	20.0	70/70	54.66	30.64	64.80	bv
08/07/07	9:36	4637.89	8.09	5.79	7.74	48.85	52.25	50.14	421.20	90.67	88.56	31.28	33.74	7.9%	32.27	202.60	66.29	64.33	1.08	0.096	4.9	nd	nd	nd	15.7	70/75	53.88	30.14	66.00	bl
08/08/07	9:27	4658.51	7.91	5.82	7.69	48.66	51.64	49.88	370.90	90.34	87.74	31.12	33.27	6.9%	32.02	177.90	65.93	63.54	0.76	0.086	4.5	nd	nd	nd	12.6	70/75	53.85	30.15	63.30	bl
08/09/07	9:37	4680.82	7.93	5.82	7.69	48.65	51.58	49.79	360.70	90.35	87.82	31.11	33.23	6.8%	31.97	173.00	65.94	63.69	1.173	0.187	14.9	nd	nd	nd	9.8	70/75	53.84	30.15	65.95	bl
08/10/07	9:24	4702.05	7.97	5.96	7.73	48.69	51.66	49.84	360.10	90.02	87.51	31.12	33.30	7.0%	32.00	172.70	65.68	63.35	0.672	0.103	5.1	4.6	4.5	0.82	6.5	75/85	53.85	30.21	62.85	bl
08/14/07	2:14	4721.44	7.97	6.07	7.74	48.89	51.86	50.02	413.70	89.63	87.44	31.28	33.42	6.8%	32.12	198.80	65.36	63.27	0.789	0.074	4.7	4.6	4.7	0.89	23.0	80/85	53.81	30.35	61.85	bl
08/15/07	10:18	4740.31	7.91	6.27	7.67	48.95	51.86	50.01	377.30	90.15	87.89	31.29	33.43	6.8%	32.14	181.20	65.80	63.72	0.865	0.065	3.9	nd	nd	nd	20.2	75/80	53.82	30.33	62.29	bl
08/16/07		4761.36	7.82	5.82	7.61	48.77	51.74	49.92	344.60	90.69	88.25	31.21	33.34	6.8%	32.06	165.10	66.27	64.03	0.799	0.058	4.0	nd	nd	nd	17.3	70/75	53.82	30.26	61.06	bl
08/17/07	9:35	4784.63	7.81	5.83	7.62	48.67	51.77	50.04	345.40	90.45	87.94	31.14	33.36	7.1%	32.15	165.30	66.11	63.71	0.624	0.061	4.3	4.5	5.3	2.5	14.2	70/75	53.79	30.27	61.94	bl
												MAP Average		7%		188.83						MAP Average		1.19						
												MAP Maximum		8%		222.20						MAP Maximum		2.5						
												MAP Minimum		6%		165.10						MAP Minimum		0.79						
Koch membranes - TFC 2822HF-400												**Membrane Ripening Period**																		
08/22/07	9:23	4805.31	7.91	7.52	7.73	48.86	50.91	49.67	529.30	80.90	78.61	31.30	32.74	4.6%	31.88	256.00	57.42	55.31	0.543	0.068	4.0	nd	nd	nd	11.3	70/75	45.12	34.39	59.82	bl
08/23/07	9:27	4827.84	7.93	7.54	7.75	48.88	50.81	49.57	516.70	80.84	78.51	31.29	32.69	4.5%	31.83	249.70	57.36	55.22	0.791	0.067	3.9	nd	nd	nd	8.0	70/75	45.12	34.39	60.76	bl
08/24/07	10:05	4850.75	7.88	7.36	7.69	49.04	50.86	49.79	531.20	81.01	78.74	31.42	32.73	4.2%	31.97	256.90	57.51	55.45	0.803	0.066	3.9	nd	nd	nd	5.0	70/75	45.12	34.32	59.93	bl
08/27/07	1:35	4856.41	7.81	6.95	7.64	48.72	50.65	49.53	590.40	81.14	78.76	31.17	32.55	4.4%	31.78	286.00	57.62	55.45	0.482	0.061	3.5	nd	nd	nd	24.0	70/75	45.09	34.34	55.24	bl
08/28/07	8:45	4875.44	7.84	6.73	7.66	48.78	50.79	49.56	546.80	80.80	78.83	31.28	32.69	4.5%	31.79	264.60	57.34	55.48	0.563	0.059	2.3	nd	nd	nd	21.5	70/75	45.12	34.57	59.93	bv
08/29/07	14:40	4903.70	7.77	6.31	7.59	48.56	50.62	49.43	524.20	81.15	78.83	31.10	32.56	4.7%	31.76	253.20	57.58	55.35	0.671	0.043	2.7	4.5	4.5	1.3	17.5	70/75	45.12	34.39	60.18	bv
08/30/07	8:35	4920.07	7.80	6.37	7.63	48.79	50.72	49.54	497.70	80.85	78.55	31.22	32.62	4.5%	31.78	239.90	57.36	55.16	0.691	0.042	1.9	nd	nd	nd	15.0	70/75	45.12	34.48	56.96	bv
08/31/07	10:25	4942.80	7.85	6.38	7.60	48.98	50.90	49.72	489.40	80.97	78.58	31.37	32.74	4.4%	31.90	236.30	57.44	55.31	0.645	0.042	2.6	nd	nd	nd	12.0	70/75	45.12	34.62	57.92	bv
09/05/07	2:25	4977.42	7.81	6.91	7.67	48.92	51.24	49.87	571.60	80.47	78.49	31.35	32.95	5.1%	32.03	276.60	57.00	55.15	0.643	0.065	3.0	nd	nd	nd	7.5	70/75	45.12	35.32	60.44	bl
09/06/07	9:20	4994.74	7.78	6.41	7.64	48.90	51.32	49.96	542.70	80.77	78.64	31.32	33.02	5.4%	32.08	262.50	57.25	55.33	0.755	0.07	3.1	4.5	4.5	1.4	5.1	70/75	45.14	35.40	56.85	bl
09/07/07	10:05	5019.44	7.93	7.36	7.73	49.03	51.03	49.85	624.70	80.35	78.44	31.43	32.90	4.7%	32.03	302.60	56.87	55.13	0.894	0.051	3.1	nd	nd	nd	22.1	70/75	45.12	35.07	65.25	bv
												12 Point flux and recovery Period																		
09/11/07	13:10	5044.56	7.87	6.23	7.78	48.82	51.77	49.97	798.40	80.46	78.67	31.24	33.35	6.8%	32.09	388.30	57.07	55.44	0.384	0.039	2.7	4.8	4.7	1.6	18.5	70/75	35.71	28.45	54.30	bv
09/12/07	16:25	5071.85	7.83	6.18	7.66	48.73	52.46	50.23	818.60	84.47	81.68	31.14	33.82	8.6%	32.23	400.70	60.61	58.02	0.427	0.036	2.7	4.7	4.7	1.6	15.0	70/75	35.74	25.68	57.60	bv px out tds high.
10/03/07	9:45	5269.35	7.92	6.84	7.75	48.73	50.90	49.47	841.70	82.58	79.11	31.21	32.83	5.2%	31.76	411.80	58.95	55.73	0.567	0.055	2.2	nd	nd	nd	9.5	70/75	35.86	26.10	58.72	bv
09/13/07	16:10	5094.23	7.77	6.49	7.58	48.70	54.98	51.05	881.60	90.32	87.05	31.25	35.75	14.4%	32.86	431.70	65.91	62.70	0.285	0.038	3.2	4.5	4.8	1.6	12.0	70/75	35.85	23.10	51.27	bv px out tds high.
10/19/07	9:33	5438.54	7.84	6.31	7.71	48.89	51.32	49.77	519.9	81.02	78.94	31.27	33.07	5.8%	31.96	251.20	57.45	55.57	0.648	0.176	6.8	nd	nd	nd	10.2	70/75	45.06	35.57	66.00	bl
10/10/07	16:08	5303.34	7.78	6.24	7.63	48.60	51.29	49.81	598.80	80.43	78.89	31.02	32.99	6.4%	31.95	290.00	56.95	55.53	0.588	0.093	3.8	nd	nd	nd	27.7	70/75	45.28	36.02	56.09	bl
10/11/07	8:52	5322.08	7.78	6.21	7.65	49.04	50.79	49.58	563.9	81.09	78.79	31.41	32.68	4.0%	31.83	273.00	57.63	55.49	0.699	0.103	3.2	nd	nd	nd	25.1	70/75	45.09	34.72	60.49	bl
10/18/07	9:57	5414.92	7.81	6.27	7.67	48.84	51.15	49.79	532.5	80.94	78.87	31.26	32.93	5.3%	31.98	253.10	57.45	55.54	0.569	0.180	7.6	nd	nd	nd	13.1	70/75	45.06	35.63	58.76	bl
10/02/07	8:40	5244.29	7.88	6.19	7.73	48.83	51.08	49.63	634.20	80.86	78.98	31.30	32.91	5.1%	31.87	307.80	57.37	55.63	0.559	0.055	3.6	nd	nd	nd	12.2	70/75	45.26	34.72	58.75	bv
09/14/07	16:45	5107.14	7.84	6.50	7.65	48.73	51.43	50.00	588.40	81.15	79.23	31.24	33.10	6.0%	32.12	284.70	57.62	55.84	0.447	0.037	3.0	4.6	4.7	1.3	10.5	70/75	45.22	34.92	58.75	bv
09/17/07	14:55	5113.46	7.94	7.21	7.76	48.75	51.46	49.78	666.80	84.89	82.45	31.20	33.09	6.1%	31.97	323.70	60.98	58.72	0.725	0.080	3.1	4.9	4.8	1.4	9.7	70/75	45.06	31.27	53.83	bl

Water Quality Data

TIME			pH			CONDUCTIVITY						TDS							TURBIDITY		SDI	BORON			OTHER					
				pH				Conductivity (mS/cm)							TDS (mg/L)				Turbidity (NTU)		Density Index	Boron (mg/L)				Inhibitor Pump			FEED VFD	
Date MM/DD/YY	Time hh:mm	Operation Time hh.hh	$pH_{F\text{-}sys}$ SC5	$pH_{P\text{-}sys}$ SC11	$pH_{C\text{-}sys}$ SC6	$C_{CF\text{-}out}$ SC3	$C_{F\text{-}PX\text{-}out}$ SC4	$C_{F\text{-}sys}$ SC5	$C_{P\text{-}sys}$ SC11	$C_{C\text{-}sys}$ SC6	$C_{C\text{-}PX\text{-}out}$ SC7	$TDS_{CF\text{-}out}$ SC3	$TDS_{F\text{-}PX\text{-}out}$ SC4	PX % Inc	$TDS_{F\text{-}sys}$ SC5	$TDS_{P\text{-}sys}$ SC11	$TDS_{C\text{-}sys}$ SC6	$TDS_{C\text{-}PX\text{-}out}$ SC7	$NTU_{MF\text{-}in}$ CART	$NTU_{CF\text{-}out}$ meter	$SDI_{CF\text{-}out}$ CART	$B_{CF\text{-}out}$ SC3	$B_{F\text{-}sys}$ SC5	$B_{P\text{-}sys}$ SC11	V_{TANK} (gallons)	Speed (gph)	HP VFD Speed (Hertz)	PX VFD Speed (Hertz)	VFD Speed (Hertz)	Notes
10/04/07	16:10	5296.06	8.00	7.23	7.70	48.72	50.94	49.48	749.90	88.17	85.08	31.19	32.75	5.0%	31.80	365.20	61.16	59.26	0.684	0.094	4.3	nd	nd	nd	5.5	7075	45.09	28.14	60.73	bv
09/18/07	9:20	5131.86	7.98	7.05	7.75	49.02	52.94	50.49	780.30	90.39	88.07	31.42	34.22	8.9%	32.47	380.60	66.02	63.85	0.398	0.074	3.2	4.7	4.9	1.6	7.5	70/75	45.05	27.51	56.27	bl px out tds high.
09/19/07	12:37	5150.4	8.01	7.65	7.84	49.16	51.21	49.91	563.30	80.79	78.97	31.48	32.96	4.7%	32.07	272.70	57.27	55.67	0.754	0.081	4.3	4.7	4.8	1.3	4.6	70/75	53.65	40.84	62.99	bl
09/20/07	9:52	5170.33	7.96	7.14	7.76	48.91	51.19	49.83	563.20	84.88	82.40	31.32	32.96	5.2%	32.01	272.70	61.01	58.74	0.552	0.076	3.6	4.8	4.9	nd	22.7	70/75	53.63	36.18	61.21	bl
09/21/07	11:33	5194.57	7.96	6.85	7.73	48.86	51.39	49.87	633.10	90.52	87.67	31.25	33.11	6.0%	32.02	307.00	66.09	63.46	0.514	0.079	3.6	4.7	4.9	1.4	19.1	70/75	53.58	31.29	60.32	bl
10/17/07	9:15	5392.50	7.83	6.17	7.69	48.91	50.93	49.73	396.6	80.18	79.02	31.28	32.79	4.8%	31.92	190.50	56.75	55.64	1.377	0.201	11.4	nd	nd	nd	16.3	70/75	60.00	46.56	66.00	bl re-run point to avoid FWF water quality is
09/25/07	14:27	5205.27	8.04	7.73	7.86	48.88	51.52	49.81	558.20	80.25	79.21	31.25	33.17	6.1%	31.96	270.10	56.83	55.79	0.865	0.078	3.4	4.6	4.4	1.2	17.6	70/75	60.00	46.05	64.98	bl
10/16/07	14:48	5375.85	7.93	6.61	7.77	48.87	51.76	49.99	470.6	84.56	83.08	31.21	33.36	6.9%	32.09	226.70	60.71	59.31	0.722	0.109	3.6	nd	nd	nd	18.5	70/75	60.00	41.48	66.00	bl re-run point to avoid FWF water quality is
09/26/07	17:05	5212.84	8.07	7.22	7.85	48.73	51.61	49.61	607.80	84.73	83.25	31.17	33.25	6.7%	31.87	295.10	60.73	59.35	0.692	0.054	3.2	4.3	4.3	1.3	16.5	70/75	60.00	40.40	65.23	bv
10/11/07	14:25	5326.13	7.76	6.26	7.64	49.31	52.03	50.26	518.8	90.25	87.35	31.55	33.29	5.5%	32.18	250.50	65.72	63.10	0.944	0.090	3.2	nd	nd	nd	24.5	70/75	60.00	35.70	58.71	bl re-run point to avoid FWF water quality is
10/12/07	9:28	5345.20	7.81	6.16	7.62	48.78	51.61	50.02	492.9	90.08	87.76	31.24	33.30	6.6%	32.14	238.00	65.74	63.58	0.952	0.172	7.2	nd	nd	nd	22.1	70/75	60.00	36.03	66.00	bl re-run point to avoid FWF water quality is
09/27/07	15:55	5221.52	8.05	7.03	7.8	48.74	51.60	49.73	668.50	90.59	88.48	31.23	33.26	6.5%	31.93	324.20	66.16	64.15	0.647	0.054	4.0	4.2	4.2	1.3	15.5	70/75	59.94	34.42	65.46	bv
												Most Affordable Point (MAP) Period																		
10/30/07	15:15	5470.73	7.98	6.89	7.79	48.66	50.51	49.38	533.10	83.31	81.09	30.90	32.38	4.8%	31.59	257.40	59.49	57.36	0.563	0.128	4.6	nd	nd	nd	5.9	70/75	54.17	37.88	62.23	bl
10/31/07	10:33	5488.11	7.91	6.41	7.73	48.78	50.82	49.53	514.10	84.12	81.58	31.23	32.73	4.8%	31.78	248.40	60.28	57.96	0.506	0.117	4.0	4.5	4.5	1.2	22.6	70/75	54.14	37.91	61.22	bl
11/01/07	10:31	5510.30	7.93	6.60	7.75	48.86	51.27	49.78	543.90	84.12	82.01	31.31	33.02	5.5%	31.99	263.20	60.32	58.37	0.38	0.106	3.2	nd	nd	nd	19.7	70/75	53.69	37.59	61.08	bl
11/02/07	10:29	5532.53	8.01	6.95	7.81	48.93	51.37	49.73	551.40	83.85	82.03	31.35	33.11	5.6%	31.95	266.90	60.12	58.41	0.385	0.105	3.2	4.4	4.5	1.3	16.5	70/75	53.70	37.85	60.88	bl
11/06/07	14:17	5556.91	7.94	6.85	7.73	48.87	51.90	50.01	560.80	84.77	82.83	31.53	33.44	6.1%	32.11	271.20	60.89	59.05	0.566	0.1	3.1	nd	nd	nd	13.2	70/75	53.73	37.46	60.04	bl
11/07/07	10:18	5574.92	7.86	6.53	7.68	48.77	51.78	49.76	533.70	84.30	82.41	31.23	33.39	6.9%	31.97	258.10	60.55	58.72	0.482	0.107	3.6	4.3	4.5	1.3	10.5	70/75	53.73	37.65	58.98	bl
11/08/07	9:37	5596.39	7.84	6.41	7.66	48.79	51.20	49.58	506.90	84.34	82.15	31.26	33.03	5.7%	31.82	244.90	60.55	58.51	0.465	0.106	3.2	nd	nd	nd	7.6	70/75	53.73	37.53	59.36	bl
11/09/07	13:30	5621.89	7.85	6.52	7.65	48.47	51.13	49.49	497.90	83.39	81.49	30.92	32.86	6.3%	31.71	240.30	59.63	57.79	0.399	0.099	3.2	nd	4.5	1.2	4.3	70/75	53.85	38.12	59.77	bl
11/12/07	14:43	5626.18	7.92	6.95	7.75	48.37	51.12	49.52	558.30	83.01	81.01	30.85	32.83	6.4%	31.63	269.80	59.29	57.39	0.776	0.113	3.7	4.5		1.3	24.0	70/75	53.85	38.26	57.76	bl
11/13/07	15:52	5651.33	7.90	6.61	7.71	48.21	51.27	49.31	513.40	82.69	80.98	30.71	32.92	7.2%	31.49	247.70	58.91	57.36	0.523	0.114	3.8	nd	nd	nd	20.9	70/75	53.82	38.75	63.06	bl
11/14/07	10:30	5668.26	7.83	6.39	7.66	48.76	51.40	49.61	497.50	83.09	81.26	31.04	33.04	6.4%	31.77	240.00	59.33	57.64	0.486	0.105	3.2	4.1	3.9	1.3	18.0	70/75	53.82	38.79	60.12	bl
11/15/07	8:34	5668.52	7.76	6.32	7.63	48.97	51.84	50.01	493.30	84.35	82.26	31.38	33.41	6.5%	32.09	238.40	60.54	58.54	0.431	0.103	2.9	nd	nd	nd	15.4	70/75	53.85	38.73	60.55	bl
11/16/07	10:07	5712.33	7.82	6.36	7.64	48.77	51.42	49.57	495.50	83.67	81.79	31.21	33.12	6.1%	31.81	239.30	60.02	58.17	0.398	0.102	2.9	4.0	3.9	1.3	9.6	70/75	53.85	38.32	61.88	bl
												Base Line Test																		
11/19/07	16:15	5719.24	7.93	7.16	7.76	48.94	51.52	49.74	617.20	80.16	78.35	31.30	33.21	6.1%	31.96	299.30	56.77	55.08	0.406	0.11	3.4	nd	nd	nd	8.3	70/75	44.89	36.33	55.32	bl
11/20/07	14:52	5741.85	8.04	7.73	7.85	48.93	51.09	49.62	651.10	80.49	78.41	31.32	32.91	5.1%	31.85	315.90	57.02	55.11	0.456	0.113	3.2	nd	nd	nd	5.6	70/75	44.86	35.33	58.25	bl
11/21/07	10:07	5761.11	7.94	7.35	7.78	48.81	51.08	49.59	626.50	80.01	78.03	31.27	32.91	5.2%	31.84	303.90	56.64	54.78	0.382	0.116	3.9	4.1	nd	1.5	23.1	70/75	44.88	35.63	61.51	bl
											MAP Average	33.02	6.0%			252.74						MAP Average		1.27						
											MAP Maximum	33.44	7.2%			271.20						MAP Maximum		1.30						
											MAP Minimum	32.38	4.8%			238.40						MAP Minimum		1.20						
Hydranautics membranes - SWC5												**Membrane Ripening Period**																		
11/28/07	3:05	5762.47	8.00	8.25	7.81	50.99	53.93	52.26	213.70	84.90	83.20	32.85	34.86	6.1%	33.67	101.30	61.21	59.41	0.934	0.144	5.3	nd	nd	nd	22.3	80/80	44.90	33.98	55.13	jm, hyd memb 1st point
11/29/07	15:25	5772.96	7.93	6.08	7.75	50.94	53.60	52.21	199.70	85.32	82.98	32.65	34.57	5.9%	33.47	94.27	61.36	59.74	0.633	0.077	4.5	nd	nd	nd	20.5	100/100	44.85	33.84	56.12	bv
11/30/07	14:30	5795.87	7.96	6.18	7.8	51.05	53.95	52.25	197.60	85.48	83.48	32.84	34.88	6.2%	33.69	92.93	61.54	59.62	0.473	0.071	4.5	4.9	4.7	0.72	16.5	80/80	44.85	33.81	59.95	bv
12/03/07	16:20	5803.76	7.95	6.20	7.79	51.36	53.57	52.17	212.60	85.45	83.02	33.05	34.62	4.8%	33.70	100.80	61.49	59.34	0.439	0.08	5.1	nd	nd	nd	15.5	80/80	44.88	33.49	56.08	bv
12/04/07	9:35	5821.21	7.89	6.01	7.73	48.73	50.78	49.44	200.10	80.56	78.47	31.19	32.71	4.9%	31.72	94.91	57.16	55.13	0.801	0.082	4.7	nd	nd	nd	12.8	80/80	44.88	33.63	58.67	bl
12/05/07	8:39	5842.23	7.88	5.99	7.74	51.38	53.65	52.13	197.80	85.30	83.08	33.09	34.73	5.0%	33.64	93.81	61.40	59.39	1.683	0.09	6.5	5.0	4.5	0.73	9.3	80/80	44.87	33.68	58.53	bl
12/06/07	9:25	5865.23	7.91	6.01	7.74	51.38	53.69	52.07	200.10	85.11	82.86	33.09	34.73	5.0%	33.61	94.84	61.24	59.19	1.456	0.088	4.5	nd	nd	nd	5.8	80/80	44.86	33.78	58.56	bl
12/07/07	8:43	5886.52	7.81	5.96	7.67	51.51	53.68	52.2	203.2	85.46	83.06	33.18	34.71	4.6%	33.68	96.49	61.60	59.37	0.738	0.072	3.6	4.9	4.8	0.76	22.6	80/80	44.87	33.38	59.43	bl
12/10/07	15:57	5893.98	7.83	5.98	7.66	50.91	53.39	52.05	215.9	85.08	82.79	32.75	34.49	5.3%	33.54	102.30	61.18	59.01	0.535	0.040	2	nd	nd	nd	21.4	80/80	44.88	33.72	56.05	bl
12/11/07	14:55	5916.95	7.81	5.93	7.67	50.81	53.29	52.03	204.8	84.96	82.78	32.66	34.41	5.4%	33.51	96.68	61.02	58.98	0.573	0.048	1.9	nd	nd	nd	17.7	80/80	44.89	33.54	59.24	bl
12/12/07	10:12	5934.55	7.88	6.05	7.71	51.39	53.68	52.23	205.5	85.27	83.05	33.09	34.75	5.0%	33.71	97.41	61.39	59.35	0.235	0.046	2.5	4.5	4.7	0.75	15.1	80/80	44.91	33.69	57.32	bl
12/13/07	9:32	5957.70	7.89	6.07	7.74	51.46	53.69	52.12	202.3	85.61	83.39	33.16	34.76	4.8%	33.64	96.04	61.71	59.66	0.266	0.045	2.4	nd	nd	nd	11.6	80/80	44.93	33.49	59.93	bl
12/14/07	9:03	5979.32	7.87	6.02	7.72	51.56	53.71	52.1	198.7	85.35	82.95	33.26	34.83	4.7%	33.65	94.38	61.55	59.27	0.485	0.051	2.9	4.7	4.6	0.75	8.1	80/80	44.94	33.49	57.81	bl
												12 Point flux and recovery Period																		
01/04/08	10:29	6044.24	7.87	6.11	7.71	51.19	53.58	52.14	243.2	83.41	81.24	32.96	34.66	5.2%	33.65	115.50	59.77	57.73	0.362	0.054	2.8				20.1	70/75	36.13	28.25	57.52	bl
01/08/08	13:39	6073.15	7.86	6.06	7.68	50.82	53.91	52.07	267.7	87.51	83.61	32.70	34.91	6.8%	33.59	127.70	63.43	59.86	2.958	0.049	2.8	4.4	5.4	0.87	16.5	70/75	36.12	25.37	51.67	bl
01/09/08	14:40	6098.28	7.80	6.09	7.60	50.43	53.19	51.44	289.5	91.96	83.57	32.21	34.22	6.2%	33.04	137.70	67.25	59.72	1.820	0.046	2.3	4.8	4.7	0.95	13.9	70/75	22.15	36.13	54.62	bv
01/10/08	9:34	6117.08	7.86	5.94	7.69	51.12	53.16	51.78	196.2	84.59	82.51	32.92	34.42	4.6%	33.41	93.24	60.80	58.86	1.696	0.044	2.3	4.5	4.6	0.71	11.5	70/75	45.35	33.52	62.75	bl
01/11/08	10:39	6140.48	7.83	5.92	7.66	50.92	53.96	51.71	212.7	89.34	87.16	32.78	34.93	6.6%	33.34	100.80	65.06	63.07	1.689	0.049	2.9	4.4	4.6	0.75	8.7	70/75	45.33	30.04	54.59	bl
01/15/08	10:04	6165.01	7.82	5.86	7.61	51.21	53.73	51.78	232.1	94.29	88.75	32.97	34.77	5.5%	33.39	110.30	69.56	64.49	1.622	0.044	2.7	5.4	5	0.77	6	70/75	45.35	26.52	57.19	bl
01/16/08	10:36	6187.46	7.82	5.81	7.65	50.96	53.56	51.64	165.7	85.17	83.46	32.79	34.65	5.7%	33.28	78.46	61.34	59.72	1.362	0.049	2.6	4.9	4.8	0.59	13.9	70/75	53.96	39.64	60.84	bl
01/17/08	9:00	6208.13	7.85	5.82	7.68	51.36	53.93	51.89	169.9	90.43	87.75	33.10	34.94	5.6%	33.51	80.77	66.14	63.61	1.789	0.051	2.7	4.7	4.6	0.60	11.2	70/75	54.06	34.92	58.45	bl
01/18/08	9:45	6229.53	7.79	5.79	7.60	51.11	53.99	51.76	182.5	95.49	91.59	32.90	34.93	6.2%	33.38	86.22	70.66	67.08	2.419	0.050	2.7	4.6	4.5	0.64	8.7	70/75	54.05	30.76	57.09	bl
01/23/08	9:28	6253.18	7.87	5.86	7.74	50.63	53.47	51.22	149.8	83.58	82.57	32.57	34.54	6.0%	33.02	70.85	60.01	58.94	1.372	0.059	2.8	6.7	5.2	0.57	6.1	70/75	59.82	45.21	65.92	bl
01/30/08	10:33	6292.08	7.92	5.92	7.72	50.87	53.32	51.42	168.1	89.06	86.87	32.74	34.49	5.3%	33.12	79.48	64.82	62.81	2.580	0.046	3.1	5.1	5.2	0.61	22.6	70/75	60.00	39.08	62.24	bl
01/31/08	9:24	6312.09	7.91	5.84	7.67	51.16	53.39	51.66	177.7	94.83	91.32	32.96	34.61	5.0%	33.32	84.28	70.11	66.85	2.683	0.045	2.6	5.1	4.9	0.64	20.5	70/75	60.00	34.01	59.29	bl
												Base Line Test																		
02/01/08	9:17	6334.14	7.87	5.93	7.73	51.18	53.31	51.66	200.7	85.13	82.91	32.97	34.55	4.8%	33.31	95.23	61.39	59.24	1.692	0.045	2.7	4.9	nd	0.74	18	70/75	44.86	33.40	55.41	bl

Water Quality Data

TIME			pH			CONDUCTIVITY						TDS							TURBIDITY		SDI	BORON			OTHER					
				pH				Conductivity (mS/cm)						TDS (mg/L)					Turbidity (NTU)		Density Index	Boron (mg/L)				Inhibitor Pump			FEED VFD	
Date MM/DD/YY	Time hh:mm	Operation Time hh.hh	$pH_{F\text{-}sys}$ SC5	$pH_{P\text{-}sys}$ SC11	$pH_{C\text{-}sys}$ SC6	$C_{CF\text{-}out}$ SC3	$C_{F\text{-}PX\text{-}out}$ SC4	$C_{F\text{-}sys}$ SC5	$C_{P\text{-}sys}$ SC11	$C_{C\text{-}sys}$ SC6	$C_{C\text{-}PX\text{-}out}$ SC7	$TDS_{CF\text{-}out}$ SC3	$TDS_{F\text{-}PX\text{-}out}$ SC4	PX % Inc	$TDS_{F\text{-}sys}$ SC5	$TDS_{P\text{-}sys}$ SC11	$TDS_{C\text{-}sys}$ SC6	$TDS_{C\text{-}PX\text{-}out}$ SC7	$NTU_{MF\text{-}in}$ CART	$NTU_{CF\text{-}out}$ meter	$SDI_{CF\text{-}out}$ CART	$B_{CF\text{-}out}$ SC3	$B_{F\text{-}sys}$ SC5	$B_{P\text{-}sys}$ SC11	V_{TANK} (gallons)	Speed (gph)	HP VFD Speed (Hertz)	PX VFD Speed (Hertz)	Speed (Hertz)	Notes
												Most Affordable Point (MAP) Period																		
02/05/08	2:31	6365.24	7.78	5.78	7.59	50.33	53.28	51.62	174.1	89.82	87.16	32.33	34.29	6.1%	33.08	81.95	65.37	62.88	3.942	0.037	2.5	nd	nd	nd	15.1	70/75	54.49	35.36	62.34	bl
02/06/08	4:43	6389.70	7.89	5.98	7.69	50.86	53.19	51.5	183.4	89.49	86.65	32.71	34.33	5.0%	33.13	86.49	65.17	62.61	2.692	0.046	2.8	nd	nd	nd	12.4	70/75	53.75	34.89	57.89	bl
02/07/08	10:39	6407.62	7.76	5.76	7.58	51.09	53.26	51.71	175.2	89.48	86.67	32.89	34.44	4.7%	33.34	82.96	65.21	62.64	2.022	0.044	2.7	nd	nd	nd	10.8	70/75	53.74	35.19	59.68	bl
02/08/08	11:15	6430.41	7.81	5.86	7.61	50.91	53.03	51.54	181.5	89.29	86.36	32.73	34.25	4.6%	33.19	85.91	65.05	62.36	1.010	0.051	2.7	nd	nd	nd	8.2	70/75	53.78	34.86	58.09	bl
02/12/08	9:12	6455.29	7.77	5.82	7.59	51.05	53.55	51.76	189.8	90.05	87.42	32.86	34.66	5.5%	33.37	89.91	65.71	63.29	2.455	0.051	3.8	nd	nd	nd	5.7	70/75	54.13	35.04	60.85	bl
02/13/08	11:00	6479.09	7.74	5.79	7.54	51.23	53.79	51.81	185.1	89.88	87.41	32.99	34.83	5.6%	33.41	87.81	65.59	63.29	1.828	0.049	3.1	nd	nd	nd	22.8	70/75	54.18	34.95	59.26	bl
02/14/08	11:37	6501.86	7.78	5.82	7.61	50.97	53.3	51.67	183.5	89.86	87.18	32.79	34.46	5.1%	33.31	86.82	65.53	63.09	1.811	0.051	3.3	nd	nd	nd	20.2	70/75	54.20	34.79	58.69	bl
02/15/08	9:22	6523.60	7.85	5.87	7.64	51.23	53.63	51.85	184.8	89.81	87.36	32.98	34.73	5.3%	33.46	87.61	65.49	63.25	1.307	0.050	3.3	nd	nd	nd	17.9	70/75	54.21	35.01	61.39	bl
02/19/08	0:00	6547.64	7.89	6.43	7.67	51.1	53.23	51.56	194.4	90.53	87.49	32.89	34.37	4.5%	33.24	92.05	66.14	63.17	0.792	0.048	3.5	nd	nd	nd	15	70/75	54.21	34.34	59.02	bv
02/20/08	10:21	6566.62	7.83	5.85	7.64	51.06	53.72	51.62	191.6	89.64	87.12	32.86	34.74	5.7%	33.27	90.82	65.35	63.04	0.743	0.045	2.8	nd	nd	0.7	13.3	70/75	54.20	34.98	61.37	bl
												MAP Average		5.2%		87.23														
												MAP Maximum		6.1%		92.05														
												MAP Minimum		4.5%		81.95														
												Base Line Test										nd	nd	nd						
02/21/08	9:27	6587.81	7.82	6.02	7.67	51.11	53.37	51.59	205.1	84.55	82.58	32.89	34.52	5.0%	33.27	97.16	60.74	58.95	0.880	0.046	2.9	nd	nd	nd	10.8	70/75	44.94	33.87	56.11	bl
02/22/08	10:09	6612.11	7.85	5.97	7.69	50.78	53.04	51.45	199.4	84.15	81.82	32.67	34.28	4.9%	33.14	94.44	60.41	58.27	2.617	0.045	3.5	nd	nd	0.76	8	70/75	45.33	33.90	59.02	bl
DOW-FILMTEC membranes - Hybrid												**Membrane Ripening Period**																		
02/27/08	11:38	6632.19	7.83	6.91	7.68	50.72	53.09	51.59	530.5	83.84	81.88	32.64	34.27	5.0%	33.22	256.50	60.08	58.29	1.631	0.048	3	nd			6	70/75	44.91	33.81	55.96	bl
02/28/08	9:37	6654.18	7.86	6.47	7.69	51.01	53.14	51.55	533.4	84.61	82.38	32.83	34.35	4.6%	33.22	257.80	60.84	58.77	1.516	0.046	2.8	nd			3.8	70/75	44.96	33.23	58.17	bl
02/29/08	10:00	6676.80	7.76	6.45	7.61	50.94	53.19	51.59	550.1	84.36	82.26	32.79	34.37	4.8%	33.25	266.10	60.55	58.65	1.285	0.045	2	nd			21.8	70/75	44.97	33.52	56.34	bl
03/04/08	9:42	6699.74	7.78	6.41	7.65	51.03	53.65	51.68	567.5	83.76	82.05	32.84	34.69	5.6%	33.31	274.60	60.05	58.46	1.527	0.050	2.8	nd			19.2	70/75	44.96	34.39	59.97	bl
03/05/08	9:49	6721.78	7.80	6.32	7.66	51.02	53.31	51.68	566.7	84.33	82.25	32.85	34.45	4.9%	33.31	273.80	60.53	58.65	1.202	0.052	3.1	nd			16.6	70/75	44.97	33.49	56.43	bl
03/06/08	10:06	6746.06	7.79	6.37	7.63	51.03	53.84	51.77	561.1	84.14	82.35	32.83	34.82	6.1%	33.38	271.60	60.39	58.72	1.258	0.050	3	nd			14	70/75	44.97	34.31	59.08	bl
03/07/08	10:48	6768.77	7.81	6.44	7.66	50.91	53.14	51.47	577.6	84.57	82.39	32.74	34.34	4.9%	33.16	279.60	60.75	58.77	0.819	0.056	3.6	nd			11.7	70/75	44.94	33.42	56.38	bl
03/11/08	10:40	6794.70	7.81	6.32	7.65	51.23	53.49	51.98	592.7	85.04	82.87	32.99	34.57	4.8%	33.51	287.10	61.17	59.17	1.208	0.048	3.2	nd			8.2	70/75	44.97	33.49	56.47	bl
03/12/08	13:50	6820.87	7.78	6.33	7.63	51.26	53.56	51.9	579.5	85.19	83.07	33.01	34.61	4.8%	33.43	280.70	61.30	58.38	1.545	0.048	3.6	nd			5.8	70/75	45.00	33.55	59.65	bv
03/13/08	12:30	6842.52	7.68	6.03	7.57	51.16	53.77	51.95	579.7	85.07	82.97	32.94	34.75	5.5%	33.48	280.30	61.18	59.23	1.808	0.047	3.5	nd			9.5	70/75	44.97	33.25	57.33	bv
03/18/08	11:11	6884.90	7.67	5.96	7.53	51.33	54.18	52.19	558.3	85.34	83.32	33.06	35.07	6.1%	33.66	270.20	61.45	59.61	1.733	0.043	2.9	nd			5	70/75	44.99	34.28	62.45	bl
												12 Point flux and recovery Period																		
03/19/08	11:07	6907.13	7.59	5.95	7.51	51.54	53.95	52.04	693.1	82.72	80.73	33.21	34.93	5.2%	33.57	336.60	59.07	57.26	1.265	0.044	2.7	nd			22.8	70/75	35.77	29.06	53.43	bl
03/20/08	10:22	6930.38	7.65	6.06	7.55	51.48	53.92	52.09	721.7	86.29	82.03	33.16	34.89	5.2%	33.61	350.90	62.32	58.43	1.829	0.043	2.8	nd			20.4	70/75	35.77	26.16	55.32	bl
03/21/08	9:42	6952.07	7.71	6.05	7.53	51.39	53.99	52.22	811.1	92.18	83.02	33.10	34.95	5.6%	33.69	396.10	67.65	59.32	1.038	0.046	3.4	nd			18	70/75	35.77	22.03	51.47	bl
03/25/08	10:18	6977.99	7.71	6.05	7.56	51.46	53.89	52.14	578.4	85.24	83.05	33.14	34.87	5.2%	33.63	280.20	61.36	59.36	0.796	0.046	3.6	nd			15.6	70/75	44.82	33.84	58.11	bl
03/26/08	10:10	7000.10	7.77	6.19	7.59	51.37	53.87	52.01	627.9	88.83	86.01	33.09	34.85	5.3%	33.53	303.90	64.63	62.05	0.726	0.052	4.6	nd			13.2	70/75	44.79	30.15	55.47	bl
04/08/08	9:52	7138.88	7.73	6.06	7.56	51.47	53.68	52.12	663.1	94.21	87.53	33.16	34.72	4.7%	33.62	321.90	69.48	63.41	3.566	0.043	4.9	nd			19.4	70/75	45.26	26.57	58.62	bl
03/27/08	10:22	7024.29	7.78	6.16	7.58	51.53	53.98	52.21	649.4	93.64	88.14	33.20	34.94	5.2%	33.67	315.20	68.95	63.98	1.703	0.053	4.8	nd			10.8	70/75	44.79	26.75	59.07	bl
04/01/08	13:40	7060.61	7.93	6.34	7.74	51.57	54.5	52.28	511.8	85.48	83.93	33.22	35.34	6.4%	33.78	247.40	61.70	60.23	0.673	0.050	7.2	nd			6.8	70/75	54.02	40.66	64.66	bv, sdi 10 min
04/04/08	12:13	7115.72	7.86	6.33	7.67	51.47	53.55	52.03	530.4	90.11	86.88	33.15	34.62	4.4%	33.56	256.40	65.77	62.83	0.698	0.047	7.1	nd			21.8	70/75	53.99	34.88	64.09	bl, SDI 10 min
04/09/08	10:19	7161.11	7.71	6.01	7.51	51.63	53.98	52.32	533.1	95.64	90.19	33.27	34.95	5.0%	33.76	257.70	70.81	65.83	2.206	0.043	4.6	nd			17	70/75	53.85	30.56	61.91	bl
04/10/08	9:44	7182.91	7.71	5.96	7.49	51.54	53.92	52.19	581.4	101.7	93.19	33.19	34.89	5.1%	33.67	281.80	76.29	68.52	1.357	0.045	4.4	nd			14.7	70/75	53.91	26.98	59.11	bl
04/11/08	9:55	7205.52	7.70	5.89	7.55	51.48	54.16	52.37	435.4	86.11	84.82	33.16	35.06	5.7%	33.77	209.30	62.19	60.97	0.874	0.047	4.6	nd			12.2	70/75	60.00	43.68	66.00	bl
04/16/08	9:37	7235.45	7.78	6.04	7.62	51.71	54.35	52.37	463.3	89.76	87.59	33.32	35.23	5.7%	33.79	223.20	65.49	63.48	0.648	0.049	4.7	nd			9.4	70/75	60.00	39.61	66.00	bl
04/17/08	8:18	7255.53	7.81	6.03	7.61	51.77	54.47	52.42	490.9	95.35	92.28	33.36	35.36	6.0%	33.83	237.00	70.53	67.71	0.644	0.055	4.6	nd			6.5	70/75	60.00	34.54	64.45	bl
												Base Line Test																		
04/18/08	9:34	7278.52	7.79	6.29	7.66	51.72	53.92	52.41	585.7	85.22	82.98	33.32	34.91	4.8%	33.83	283.80	61.38	59.32	0.569	0.058	4.8	nd			5.1	70/75	45.00	33.81	60.64	bl
												Most Affordable Point (MAP) Period																		
04/23/08	7:40	7296.05	7.74	5.92	7.59	51.82	54.67	52.59	511.5	91.45	89.01	33.39	35.55	6.5%	33.95	247.40	66.99	64.76	1.112	0.045	4	nd			23.7	70/75	53.99	34.81	66.00	bl
04/24/08	8:13	7318.79	7.71	5.88	7.56	51.83	54.59	52.44	502.4	90.51	87.97	33.42	35.47	6.1%	33.86	242.90	66.15	63.82	0.665	0.048	4.3	nd			21.5	70/75	54.02	35.57	64.48	bl
04/25/08	8:07	7340.85	7.69	5.92	7.54	51.77	54.17	52.34	499.7	90.87	88.11	33.36	35.11	5.2%	33.78	241.40	66.48	63.95	0.655	0.045	3.9	nd			19.4	70/75	53.99	34.98	64.05	bl
04/29/08	10:07	7365.37	7.75	6.02	7.59	51.71	54.48	52.57	510.6	89.09	87.28	33.32	35.34	6.1%	33.92	246.70	64.87	63.21	0.765	0.049	4.9	nd			16.8	70/75	53.99	36.82	66.00	bl
04/30/08	11:00	7388.37	7.74	6.01	7.55	51.88	54.05	52.51	501.8	90.03	87.12	33.44	35.01	4.7%	33.89	242.40	65.71	63.03	1.183	0.053	6.9	nd			14.5	70/75	53.99	35.83	66.00	bl
05/01/08	12:41	7412.47	7.72	6.05	7.58	51.65	55.02	52.59	496	88.94	87.27	33.27	35.77	7.5%	33.93	239.40	64.69	63.17	0.868	0.055	6.9	nd			12.1	70/75	53.96	37.53	66.00	bl
05/02/08	8:48	7431.05	7.74	6.03	7.58	51.69	53.81	52.24	509.2	89.96	87.02	33.31	34.82	4.5%	33.70	246.00	65.62	62.94	0.550	0.061	7.5	nd			10.4	70/75	53.97	35.68	64.68	bl
Toray Membranes - TM800E-400 (Set 2)												**Membrane Ripening Period**																		
05/16/08	10:30	7475.85	7.89	6.05	7.75	51.39	53.88	52.08	265.3	85.61	83.54	33.07	34.84	5.4%	33.58	126.30	61.71	59.81	nd	0.025	3.6	nd	4.7	0.55	nd	nd	45.09	34.28	57.83	bl - This SDI is with Zenon running thru me
05/20/08	9:16	7555.25	7.78	5.92	7.63	51.55	54.22	52.13	256.5	85.42	83.59	33.21	35.13	5.8%	33.63	122.10	61.62	59.85	0.837	0.033	3.7	nd	nd	nd	nd	nd	45.15	34.83	58.91	bl
05/21/08	9:02	7579.01	7.73	5.75	7.61	51.52	53.82	52.09	241.2	86.17	83.89	33.18	34.83	5.0%	33.59	114.50	62.19	60.13	1.445	0.032	3.5	nd	4.7	0.52	nd	nd	45.13	34.28	59.38	bl
05/22/08	9:09	7603.13	7.75	5.72	7.59	51.61	53.71	52.16	244.7	86.17	83.69	33.24	34.75	4.5%	33.64	116.30	62.21	59.93	3.365	0.032	3.5	nd	nd	nd	nd	nd	45.15	33.96	59.94	bl
05/23/08	10:04	7622.64	7.66	5.63	7.53	51.49	54.18	52.26	234.1	86.04	84.07	33.15	35.08	5.8%	33.72	111.00	62.08	60.28	1.421	0.051	4.4	nd	4.6	0.50	7.9	70/75	45.13	34.51	63.38	bl
05/28/08	9:26	7645.06	7.84	5.61	7.68	51.44	53.88	52.01	259.5	85.32	83.28	33.13	34.87	5.3%	33.54	123.60	61.47	59.57	0.493	0.078	4.7	nd	6.1	0.63	5.8	70/75	45.15	34.54	62.09	bl
05/29/08	9:31	7667.17	7.78	5.69	7.62	51.37	53.89	52.08	244.9	85.54	83.61	33.06	34.86	5.4%	33.59	116.40	61.56	59.85	0.502	0.051	4.1	nd	nd	nd	21.8	70/75	45.12	34.63	65.85	bl

Water Quality Data

TIME			pH			CONDUCTIVITY						TDS							TURBIDITY		SDI	BORON			OTHER					
				pH				Conductivity (mS/cm)							TDS (mg/L)				Turbidity (NTU)		Density Index	Boron (mg/L)				Inhibitor Pump			FEED VFD	
Date MM/DD/YY	Time hh:mm	Operation Time hh.hh	$pH_{F\text{-}sys}$ SC5	$pH_{P\text{-}sys}$ SC11	$pH_{C\text{-}sys}$ SC6	$C_{CF\text{-}out}$ SC3	$C_{F\text{-}PX\text{-}out}$ SC4	$C_{F\text{-}sys}$ SC5	$C_{P\text{-}sys}$ SC11	$C_{C\text{-}sys}$ SC6	$C_{C\text{-}PX\text{-}out}$ SC7	$TDS_{CF\text{-}out}$ SC3	$TDS_{F\text{-}PX\text{-}out}$ SC4	PX % Inc	$TDS_{F\text{-}sys}$ SC5	$TDS_{P\text{-}sys}$ SC11	$TDS_{C\text{-}sys}$ SC6	$TDS_{C\text{-}PX\text{-}out}$ SC7	$NTU_{MF\text{-}in}$ CART	$NTU_{CF\text{-}out}$ meter	$SDI_{CF\text{-}out}$ CART	$B_{CF\text{-}out}$ SC3	$B_{F\text{-}sys}$ SC5	$B_{P\text{-}sys}$ SC11	V_{TANK} (gallons)	Speed (gph)	HP VFD Speed (Hertz)	PX VFD Speed (Hertz)	VFD Speed (Hertz)	Notes
05/30/08	10:03	7689.77	7.76	5.75	7.63	51.47	53.94	52.21	249.1	85.67	83.61	33.13	34.91	5.4%	33.68	118.50	61.73	59.87	0.566	0.058	4.2	nd	4.8	0.56	19.1	70/75	45.15	34.51	62.31	bl
												12 Point flux and recovery Period																		
06/03/08	10:58	7716.35	7.64	5.63	7.54	51.41	55.32	52.47	305	86.59	84.08	33.05	36.01	9.0%	33.86	145.60	62.59	60.32	0.449	0.044	3.9	nd	nd	nd	16.6	70/75	36.50	28.39	54.92	bl
06/04/08	9:16	7738.66	7.68	5.58	7.55	51.63	54.53	52.37	310.4	90.21	83.36	33.26	35.36	6.3%	33.79	148.40	65.84	59.64	0.868	0.046	4.1	nd	4.7	0.66	14.5	70/75	36.53	25.66	57.69	bl
06/05/08	9:20	7760.77	7.69	5.63	7.53	51.49	54.86	52.34	335.1	93.16	85.64	33.17	35.66	7.5%	33.78	160.40	68.49	61.69	1.154	0.046	4.2	nd	nd	nd	12.4	70/75	36.18	23.67	54.59	bl
06/06/08	9:17	7784.73	7.71	5.66	7.61	51.59	53.96	52.23	239.4	86.04	84.04	33.23	35.08	5.6%	33.68	113.60	62.07	60.24	0.826	0.048	4.7	nd	5.0	0.55	10.4	70/75	45.06	34.39	63.02	bl
06/10/08	9:30	7809.31	7.96	6.02	7.78	51.61	54.41	52.28	323.1	89.62	87.02	33.27	35.31	6.1%	33.76	154.60	65.32	62.94	0.624	0.064	4.8	nd	4.9	0.69	8.1	70/75	45.03	30.50	59.11	bl
06/11/08	10:37	7832.48	7.93	5.94	7.73	51.41	53.77	52.02	329.9	93.95	88.86	33.11	34.78	5.0%	33.56	157.80	69.21	64.58	0.891	0.060	4.6	nd	4.8	0.71	6	70/75	45.03	27.25	58.33	bl
06/12/08	10:10	7856.03	7.94	5.82	7.83	51.39	55.57	52.51	239.2	86.78	85.84	33.09	36.24	9.5%	33.88	113.60	62.79	61.91	0.815	0.048	4.6	nd	4.8	0.56	24	70/75	54.23	40.66	66.00	bl
06/24/08	9:15	8000.16	7.79	5.73	7.64	51.31	53.95	52.05	234.2	85.39	83.71	33.04	34.91	5.7%	33.58	111.10	61.51	59.94	0.858	0.072	4.6	nd	5.1	0.57	10.3	70/75	54.11	40.78	65.81	bl
06/13/08	10:09	7878.48	8.06	6.05	7.87	51.65	54.21	52.31	262	90.74	88.57	33.29	35.21	5.8%	33.76	124.70	60.39	64.34	0.918	0.055	4.6	nd	4.8	0.58	21.7	70/75	54.29	35.36	66.00	bl
06/17/08	13:25	7908.16	7.83	5.80	7.60	50.35	54	51.2	266.8	93.44	90.64	32.42	34.95	7.8%	32.97	127.10	68.76	66.27	0.588	0.043	2	nd	4.8	0.61	19	70/75	54.29	31.58	65.20	bv
06/18/08	15:15	7932.03	7.75	4.96	7.60	50.25	53.82	51.02	203.5	83.38	82.62	32.14	34.79	8.2%	32.86	95.97	59.51	58.74	0.714	0.043	4.1	nd	4.6	0.49	17	70/75	60.00	45.08	66.00	bv
06/19/08	17:50	7956.59	7.85	5.21	7.66	50.08	52.62	50.7	230.6	86.62	84.78	32.16	33.95	5.6%	32.62	110.00	62.56	61.03	0.700	0.049	4.2	nd	4.7	0.55	14.5	70/75	60.00	39.64	66.00	bv
06/20/08	12:40	7975.25	7.97	6.77	7.71	50.01	52.85	50.72	257.3	92.05	88.76	32.11	34.10	6.2%	32.65	121.90	67.56	64.56	0.750	0.062	4.9	nd	4.6	0.59	12.5	70/75	60.00	34.10	66.00	bv
06/25/08	10:13	8023.37	7.92	6.01	7.75	51.24	53.67	51.89	281.4	85.23	83.18	32.99	34.69	5.2%	33.46	134.10	61.35	59.48	0.501	0.095	4.7	nd	4.6	0.66	8.1	70/75	45.18	34.48	61.39	bl
												Most Affordable Point (MAP) Period																		
06/27/08	9:25	8053.71	7.87	5.86	7.67	51.26	53.76	51.92	254.7	89.19	87.12	32.99	34.78	5.4%	33.49	121.10	64.96	63.03	0.509	0.031	2.7	nd	4.9	0.61	nd	nd	54.20	36.14	62.54	bl
06/30/08	9:59	8126.28	7.89	5.91	7.69	51.27	53.83	51.99	235.9	89.76	87.46	33.02	34.83	5.5%	33.53	112.10	65.47	63.35	0.741	0.031	1.9	nd	4.7	0.55	nd	nd	54.20	36.06	62.44	bl
07/08/08	9:36	8237.25	7.78	6.06	8.06	51.36	53.66	51.95	272.8	90.05	87.51	33.07	34.73	5.0%	33.51	130.10	65.74	63.39	0.812	0.033	2.8	nd	5.1	0.75	nd	nd	54.20	35.51	62.27	bl
07/09/08	9:56	8261.59	7.96	6.09	7.81	51.39	53.31	51.81	325	84.96	82.62	33.10	34.47	4.1%	33.42	155.50	61.16	58.97	0.577	0.035	2.8	nd	4.8	0.64	nd	nd	45.49	33.75	59.82	bl
DOW-FILMTEC - SW30XHR-400i high boron rejection												**Membrane Ripening Period**																		
09/24/08	4:16	8264.68	7.91	6.31	7.72	50.51	52.71	51.31	222.3	84.23	82.01	32.69	33.98	3.9%	33.04	104.40	60.43	58.41	1.376	0.039	2.4	nd	nd	nd	nd	nd	45.81	32.69	53.48	bl
09/25/08	10:09	8282.48	7.86	6.11	7.67	50.81	53.65	51.58	189.6	83.84	82.26	32.66	34.69	6.2%	33.23	89.84	60.09	58.65	0.941	0.038	2.5	nd	nd	nd	nd	nd	45.78	33.96	53.51	bl
09/26/08	9:59	8306.32	7.82	5.93	7.65	50.67	53.59	51.54	179.4	83.61	82.19	32.58	34.64	6.3%	33.18	84.87	59.87	58.57	0.542	0.035	2.2	nd	nd	nd	nd	nd	45.76	34.01	53.48	bl
09/29/08	15:43	8330.41	7.81	6.08	7.67	50.42	53.49	51.71	205.4	83.15	81.83	32.16	34.15	6.2%	33.06	97.20	59.01	57.72	0.771	0.037	2	nd	4.87	0.37	nd	nd	45.79	34.54	53.48	bl
09/30/08	12:50	8351.53	7.81	6.04	7.65	50.49	53.21	51.61	192.8	83.85	81.98	32.44	34.33	5.8%	33.23	91.11	60.05	58.37	0.765	0.036	2.2	nd	nd	nd	nd	nd	45.76	33.72	53.79	bl
10/07/08	8:17	8392.12	7.92	6.21	7.73	51.02	53.24	51.74	251	84.16	82.29	32.84	34.41	4.8%	33.35	119.50	60.39	58.66	0.985	0.038	1.2	nd	4.94	0.55	nd	nd	45.82	33.19	53.68	bl
10/08/08	9:52	8416.18	7.84	6.21	7.67	50.71	53.45	51.62	243.7	83.78	82.13	32.57	34.53	6.0%	33.25	115.70	60.01	58.53	0.805	0.039	1.6	nd	nd	nd	nd	nd	45.79	34.01	53.83	bl
10/16/08	9:11	8436.28	7.81	5.95	7.62	50.78	53.22	51.79	218.5	83.91	81.83	32.64	34.36	5.3%	33.38	103.60	60.18	58.22	0.752	0.030	1.8	nd	nd	nd	nd	nd	45.62	33.63	53.88	bl
10/17/08	9:57	8461.04	7.82	5.97	7.66	50.94	53.25	51.89	218.3	84.29	82.26	32.78	34.41	5.0%	33.45	103.40	60.49	58.64	0.753	0.029	2.1	nd	4.95	0.49	nd	nd	45.62	33.34	53.92	bl
10/20/08	9:50	8532.30	7.84	5.98	7.64	50.98	53.38	51.84	207.1	84.28	82.51	32.81	34.51	5.2%	33.42	98.16	60.52	58.86	0.720	0.029	2.3	nd	nd	nd	nd	nd	45.38	33.39	54.01	bl
10/21/08	9:52	8556.95	7.91	6.23	7.72	51.07	53.41	51.96	222.5	84.45	82.68	32.86	34.56	5.2%	33.51	105.50	60.71	59.03	0.763	0.029	2.4	nd	nd	nd	nd	nd	45.38	33.32	53.92	bl
10/22/08	10:11	8578.15	7.84	6.11	7.69	50.93	53.12	51.83	249.2	84.48	82.48	32.66	34.28	5.0%	33.39	118.40	60.58	58.63	0.532	0.026	1.9	nd	4.95	0.57	nd	nd	45.36	32.75	53.97	bl
10/23/08	9:30	8601.45	7.86	6.09	7.71	51.05	53.09	51.99	243.7	84.55	82.19	32.85	34.30	4.4%	33.52	115.80	60.72	58.57	0.971	0.029	2.3	nd	nd	nd	nd	nd	45.39	32.78	54.42	bl
10/24/08	11:37	8627.60	7.89	6.14	7.74	50.79	53.17	51.89	243.4	84.54	82.43	32.66	34.33	5.1%	33.44	115.40	60.72	58.78	0.673	0.029	1.9	nd	5.07	0.56	nd	nd	45.38	32.84	54.32	bl
10/27/08	10:39	8698.61	7.83	6.13	7.67	51.38	53.32	52.11	242.1	84.39	82.16	33.11	34.48	4.1%	33.63	115.00	60.69	58.56	0.799	0.029	2.6	nd	nd	nd	nd	nd	45.41	32.72	53.91	bl
10/28/08	9:35	8721.54	7.85	6.28	7.68	51.25	54.15	52.34	289.9	85.21	82.92	33.02	35.08	6.2%	33.78	138.40	61.32	59.27	0.801	0.029	2.4	nd	5.08	0.66	nd	nd	36.45	27.41	50.91	bl
10/29/08	10:00	8745.97	7.83	6.25	7.64	50.97	55.03	52.57	301.4	89.17	86.29	32.81	35.79	9.1%	33.94	144.10	64.89	62.29	0.737	0.027	2.1	nd	5.04	0.68	nd	nd	36.45	23.98	50.02	bl
11/22/08	10:34	9203.95	7.87	6.07	7.67	50.88	53.61	52.03	305.4	90.32	82.12	32.72	34.66	5.9%	33.56	145.70	65.97	58.54	0.858	0.027	2.5	nd	4.95	0.65	nd	nd	36.88	22.62	56.33	bl
10/31/08	10:34	8791.25	7.86	6.27	7.69	50.81	53.11	51.67	242.1	84.68	82.48	32.68	34.30	5.0%	33.31	115.10	60.82	58.86	0.926	0.027	3.1	nd	4.33	0.54	nd	nd	45.12	32.37	54.28	bl
11/03/08	10:24	8864.08	7.85	6.15	7.65	50.91	53.79	51.91	238.1	89.16	86.43	32.76	34.81	6.3%	33.49	113.10	64.92	62.43	1.956	0.029	2.2	nd	4.58	0.55	nd	nd	45.41	28.98	54.25	bl
11/21/08	10:43	9180.09	7.89	5.95	7.67	50.94	54.06	52.16	228.8	87.26	85.05	32.78	34.99	6.7%	33.62	108.20	63.18	61.14	0.536	0.026	2.8	nd	4.72	0.51	nd	nd	45.76	30.91	58.41	bl
11/05/08	10:29	8912.18	7.86	6.02	7.68	50.81	52.65	51.46	171.4	83.71	81.76	32.68	34.01	4.1%	33.16	80.97	60.04	58.18	1.573	0.026	2.2	nd	4.52	0.42	nd	nd	54.64	39.67	59.97	bl
11/06/08	9:44	8931.89	7.83	5.83	7.62	50.68	53.49	51.87	178.5	88.74	86.82	32.61	34.57	6.0%	33.42	84.32	64.55	62.72	1.387	0.027	2.2	nd	4.42	0.41	nd	nd	54.64	34.58	58.63	bl
11/19/08	10:55	9143.56	7.88	5.91	7.64	51.06	54.56	52.17	198.7	88.57	87.27	32.87	35.42	7.8%	33.66	94.09	64.41	63.14	1.062	0.027	2.6	nd	4.77	0.48	nd	nd	54.91	34.39	60.97	bl
11/11/08	10:38	9019.56	7.85	5.61	7.58	50.97	53.68	52.02	148	83.52	82.59	32.79	34.75	6.0%	33.55	69.90	59.86	58.92	1.295	0.027	3.1	nd	4.44	0.35	nd	nd	60.00	44.88	65.70	bl
11/14/08	9:59	9065.09	7.77	5.67	7.56	50.51	52.86	51.51	159.4	88.07	86.09	32.41	34.07	5.1%	33.17	75.38	63.76	61.86	1.105	0.027	3	nd	5.2	0.39	nd	nd	60.00	38.31	63.61	bl
11/17/08	14:07	9120.17	7.91	5.86	7.69	50.68	53.39	51.91	191.6	93.22	90.94	32.52	34.47	6.0%	33.41	90.31	68.46	66.36	1.085	0.033	2.8	nd	4.74	0.43	nd	nd	60.00	33.78	62.91	bl
11/26/08	9:31	9246.94	7.95	6.09	7.68	50.96	54.55	52.38	233.6	82.46	81.74	32.81	35.45	8.0%	33.82	110.90	58.87	58.18	1.035	0.029	3	nd	nd	nd	nd	nd	45.78	36.27	61.25	bl, base line
												Most Affordable Point (MAP) Period																		
11/30/08	12:25	9329.36	7.87	5.98	7.66	50.97	53.6	51.96	207.5	91.27	89.12	32.77	34.64	5.7%	33.52	98.42	66.86	64.88	0.585	0.028	2.6	nd	4.74	0.47	nd	nd	54.37	32.70	64.45	bv
12/01/08	9:54	9350.94	7.85	5.89	7.63	51.07	53.59	51.86	196.4	89.82	87.63	32.89	34.67	5.4%	33.45	93.06	65.62	63.51	0.895	0.028	3.1	nd	nd	nd	nd	nd	54.38	33.84	65.08	bl
12/02/08	10:28	9369.43	7.82	5.81	7.61	51.09	53.98	52.03	189.9	89.18	87.25	32.89	34.95	6.3%	33.58	89.96	64.99	63.18	0.793	0.020	2.9	nd	4.71	0.43	nd	nd	54.38	34.83	55.56	bl
12/03/08	15:59	9390.43	7.89	6.01	7.69	50.95	53.66	51.81	198.1	89.26	87.38	32.77	34.69	5.9%	33.40	93.74	65.06	63.28	0.687	0.026	3.4	nd	nd	nd	nd	nd	54.38	34.80	56.08	bl
12/04/08	14:10	9412.52	7.73	6.08	8.02	51.04	53.52	51.91	193.4	89.23	87.17	32.86	34.58	5.2%	33.48	91.67	64.98	63.08	0.941	0.022	2.7	nd	nd	nd	nd	nd	54.38	35.27	56.12	bv
12/09/08	9:55	9451.75	7.88	5.98	7.71	51.15	53.92	51.92	195.1	90.05	86.97	32.94	34.91	6.0%	33.51	92.33	65.88	62.91	0.825	0.030	3.1	nd	nd	nd	nd	nd	54.39	34.01	56.06	bl
12/10/08	15:34	9480.71	7.83	6.01	7.69	50.81	53.35	51.74	192.6	89.81	87.63	32.62	34.48	5.7%	33.31	91.02	65.47	63.47	1.059	0.033	3.2	nd	4.72	0.43	nd	nd	54.38	34.04	56.11	bl
12/11/08	10:17	9994.40	7.92	5.91	7.73	51.17	54.14	52.15	185.1	88.37	86.98	32.94	35.09	6.5%	33.67	87.62	64.32	62.91	0.539	0.032	3.2	nd	nd	nd	nd	nd	55.13	36.47	57.55	bl

Water Quality Data

TIME			pH			CONDUCTIVITY						TDS							TURBIDITY		SDI	BORON			OTHER					
			pH			Conductivity (mS/cm)						TDS (mg/L)							Turbidity (NTU)		Density Index	Boron (mg/L)								
Date MM/DD/YY	Time hh:mm	Operation Time hh.hh	$pH_{F\text{-}sys}$ SC5	$pH_{P\text{-}sys}$ SC11	$pH_{C\text{-}sys}$ SC6	$C_{CF\text{-}out}$ SC3	$C_{F\text{-}PX\text{-}out}$ SC4	$C_{F\text{-}sys}$ SC5	$C_{P\text{-}sys}$ SC11	$C_{C\text{-}sys}$ SC6	$C_{C\text{-}PX\text{-}out}$ SC7	$TDS_{CF\text{-}out}$ SC3	$TDS_{F\text{-}PX\text{-}out}$ SC4	PX % Inc	$TDS_{F\text{-}sys}$ SC5	$TDS_{P\text{-}sys}$ SC11	$TDS_{C\text{-}sys}$ SC6	$TDS_{C\text{-}PX\text{-}out}$ SC7	$NTU_{MF\text{-}in}$ CART	$NTU_{CF\text{-}out}$ meter	$SDI_{CF\text{-}out}$ CART	$B_{CF\text{-}out}$ SC3	$B_{F\text{-}sys}$ SC5	$B_{P\text{-}sys}$ SC11	V_{TANK} (gallons)	Inhibitor Pump Speed (gph)	HP VFD Speed (Hertz)	PX VFD Speed (Hertz)	FEED VFD Speed (Hertz)	Notes
12/15/08	10:12	9543.98	7.87	5.76	7.66	51.08	53.97	52.06	179.1	89.38	86.51	32.91	35.01	6.4%	33.59	84.81	65.28	62.48	2.289	0.029	2.6	nd	5.59	0.39	nd	nd	54.69	34.98	57.29	bl
12/16/08	10:15	9565.01	7.76	5.54	7.59	50.82	53.29	51.67	171.4	89.53	85.93	32.71	34.57	5.7%	33.36	81.26	65.39	61.96	3.514	0.030	2.4	nd	nd	nd	nd	nd	54.43	34.01	57.54	bl
12/17/08	10:43	9589.29	7.79	5.71	7.63	51.02	53.71	52.01	189.6	85.13	82.62	32.86	34.89	6.2%	33.54	90.02	61.34	58.98	2.565	0.029	2.5	nd	4.68	0.43	nd	nd	45.18	33.22	55.11	bl, base line

TIME			CALCULATED PARAMETERS			TEMP	PRESSURES										FLOWS				MAIN PANEL KW METER				VFD KW METER			
		Operation	RO	Flux	Power		P_{MF-in}	P_{MF-out}	P_{CF-in}	P_{CF-out}	$P_{PX-Feed\ In}$	$P_{PX-conc\ out}$	$P_{PX-boost\ suct}$	P_{F-SYS}	P_{C-SYS}	P_{P-SYS}	$Q_{F-HP\ Pump}$	$Q_{PX\ Pump}$	$Q_{Feed\ PX-In}$	Q_{P-SYS}	A_{sys}	P HP/PX	P booster	Power	PX power	HP Power	Feed Pump	
Date	Time	Time	Recovery %	Gfd	kWh/m3	Influent	(psi)	(psi)	(psi)	(psi)	(psi)	(psi)	(psi)	(psi)	(psi)	(psi)	(gpm)	(gpm)	(gpm)	(gpm)	amp	(kw)	(kw)	Factor	(kw)	(kw)	(kw)	Notes
MM/DD/YY	hh:mm	hh.hh				Temp F	1	2	3	4	5	6	7	8	9	10	11	12	13	14	15	16	17	18	19	20	21	
Toray membranes - TM800E-400										**Membrane Ripening Period**																		
5/30/2007	11:15	4151.28	42.3%	7.47	1.90	57.0	51.2	39.4	38.8	33.9	34.7	27.7	800	818	808	2.9	44.0	57.95	59.56	43.6	25.00	18.85	nd	0.900	0.90	17.00	5.00	
6/5/2007	11:30	4198.44	43.0%	7.46	1.87	58.0	51.2	38.4	37.8	32.9	34.0	27.1	790	807	798	2.5	44.0	57.60	57.60	43.5	24.50	18.48	nd	0.900	0.85	16.50	4.95	
6/6/2007	10:15	4218.73	42.6%	7.47	1.90	58.0	51.1	40.5	39.8	38.6	35.6	28.6	790	807	800	2.7	44.0	58.24	58.75	43.6	24.40	18.80	nd	0.900	0.85	16.50	4.93	bl
6/7/2007	9:25	4239.52	42.6%	7.46	1.87	58.0	51.2	40.7	40.0	38.8	33.7	27.1	795	815	802	2.5	43.5	57.80	58.70	43.5	24.40	18.50	nd	0.900	0.85	16.60	4.93	bl
6/11/2007	11:45	4256.49	43.1%	7.49	1.84	59.8	51.0	43.8	43.3	36.5	36.0	30.0	785	800	790	2.8	41.2	57.53	57.75	43.7	24.00	18.22	nd	0.898	0.90	16.30	4.90	jm
6/12/2007	9:30	4278.07	42.5%	7.47	1.87	60.0	51.0	22.4	21.9	20.5	15.5	9.7	780	795	785	2.5	42.5	57.50	59.10	43.6	24.50	18.55	nd	0.898	0.90	16.60	4.91	bl
6/13/2007	11:45	4299.24	42.7%	7.49	1.84	61.0	50.5	29.0	28.0	23.8	23.0	15.0	780	800	790	2.4	43.0	57.47	58.76	43.7	24.50	18.24	nd	0.900	0.90	16.30	4.95	bv
6/14/2007	9:00	4316.67	42.8%	7.47	1.82	62.0	50.8	39.0	38.0	32.5	32.0	25.5	770	795	790	2.4	43.5	57.66	58.32	43.6	23.80	18.06	nd	0.899	0.90	16.30	4.95	bv
										12 Point flux and Recovery Period																		
6/19/2007	10:12	4341.84	42.5%	6.00	1.71	62.0	53.9	42.3	42.0	40.9	39.8	34.7	735	745	742	2.2	35.5	45.70	47.27	35.0	19.75	13.57	nd	0.842	0.50	12.10	4.65	bl
6/20/2007	10:10	4364.19	46.4%	6.00	1.78	61.5	54.0	44.2	43.9	43.0	41.9	38.4	780	790	785	1.3	32.8	39.68	40.39	35.0	19.80	14.15	nd	0.840	0.35	12.60	4.55	bl px out tds high. re-run point on 6-21
06/21/07	9:45	4386.12	47.0%	5.98	1.77	60.5	54.4	47.8	47.3	46.2	45.0	40.9	775	782	778	1.2	35.5	39.43	44.53	34.9	19.75	14.05	nd	0.845	0.29	12.60	4.59	bl Unbalanced PX to compensate low flo
06/22/07	10:20	4410.71	50.1%	5.98	1.85	62.0	54.5	39.5	39.0	38.1	36.9	33.3	808	819	815	0.9	36.0	34.71	40.95	34.9	20.44	14.68	nd	0.862	0.29	13.50	4.55	bl Unbalanced PX to compensate low flo
06/26/07	10:20	4432.57	41.8%	7.47	1.82	63.0	50.4	32.9	32.1	30.2	27.4	19.0	759	779	770	1.9	44.5	59.28	60.74	43.6	23.85	18.01	nd	0.900	0.95	15.19	4.95	bl
06/27/07	9:50	4454.19	45.8%	7.47	1.87	64.0	52.0	36.9	36.1	34.5	33.0	27.4	804	819	811	1.9	44.5	50.18	51.65	43.6	23.25	18.51	nd	0.902	0.61	16.90	4.83	bl
06/28/07	9:10	4475.80	49.4%	7.42	1.92	64.5	52.8	39.1	38.5	37.0	33.5	29.1	835	847	840	1.9	44.0	44.31	47.23	43.3	24.73	18.84	nd	0.902	0.48	17.35	4.75	bl Unbalanced PX to compensate low flo
06/29/07	9:55	4497.25	43.3%	8.91	1.95	65.0	47.5	29.5	28.3	25.8	23.8	14.1	805	832	819	3.1	51.5	68.02	68.10	52.0	29.92	23.04	nd	0.921	1.37	20.50	5.17	bl
07/03/07	nd	4520.51	45.9%	8.97	1.93	65.0	48.8	34.6	32.7	30.2	28.1	20.0	830	855	840	3.3	51.7	60.03	61.70	52.3	29.90	22.92	nd	0.918	0.97	20.90	5.11	bl
07/05/07	nd	4527.09	49.7%	8.97	1.98	65.5	50.0	43.3	42.5	40.2	38.6	33.0	880	890	885	3.3	51.7	52.55	52.92	52.3	30.40	23.47	nd	0.920	1.00	21.60	5.00	bv
07/06/07	nd	4532.36	43.4%	9.91	1.98	64.0	44.0	32.0	30.5	27.5	24.5	13.0	820	850	840	4.5	58.0	77.44	75.38	57.8	33.60	26.05	nd	0.922	1.80	24.10	5.40	bv
07/09/07	nd	4536.59	46.0%	9.98	2.01	62.5	46.5	37.0	35.8	32.8	29.7	21.0	857	883	870	4.0	56.5	67.31	68.44	58.2	34.60	26.53	nd	0.930	1.45	25.10	5.37	bl
07/10/07	nd	4543.50	50.3%	9.93	2.06	64.0	47.0	35.0	34.0	28.0	29.5	22.8	910	930	920	4.3	58.0	57.62	57.25	57.9	35.05	27.15	nd	0.922	0.90	26.10	5.20	bv
										Most Affordable Point (MAP)																		
07/24/07	17:15	4564.69	50.4%	9.00	2.12	66.0	47.5	34.0	33.0	27.0	29.5	24.0	930	950	940	3.6	52.0	51.56	51.72	52.5	32.75	25.28	nd	0.922	0.7	23.5	4.7	bv
07/26/07	16:45	4591.27	50.2%	9.00	2.10	67.0	49.0	34.0	32.5	27.0	29.0	23.5	925	940	930	3.5	52.0	50.51	52.10	52.5	32.61	25.04	nd	0.925	0.7	23.3	4.9	bv
07/27/07	15:10	4607.91	50.6%	9.00	2.13	66.0	55.5	33.0	32.5	30.0	28.0	22.5	930	950	940	3.25	52.0	51.93	51.25	52.5	33.03	25.35	nd	0.923	0.8	23.5	5.8	bv
08/07/07	9:23	4637.68	50.3%	8.95	2.12	66.0	58.2	33.9	32.9	30.9	29.5	23.9	924	940	935	3.3	51.0	50.93	51.52	52.2	32.74	25.09	nd	0.921	0.65	23.2	6.05	bl
08/08/07	9:15	4658.32	50.3%	8.98	2.15	63.0	53.2	33.7	33.0	30.6	29.1	23.8	941	957	948	3.25	51.5	50.67	51.71	52.4	33.25	25.55	nd	0.921	0.66	23.7	5.39	bl
08/09/07	9:10	4680.36	50.3%	8.97	2.15	63.0	57.8	33.8	33.0	27.3	28.5	23.1	945	959	945	3.25	51.0	50.78	51.65	52.3	33.32	25.59	nd	0.92	0.65	23.75	6	bl
08/10/07	9:13	4701.86	50.4%	8.98	2.14	64.0	52.4	33.2	32.9	30.5	27.0	22.5	943	959	946	3.25	51.5	51.08	51.60	52.4	32.97	25.51	nd	0.922	0.65	23.63	5.3	bl
08/14/07	1:48	4721.01	50.2%	8.97	2.10	66.0	49.8	33.2	32.4	30.1	29.0	23.3	925	941	933	2.8	51.0	50.55	51.90	52.3	32.13	24.98	nd	0.926	0.66	23.19	5.07	bl
08/15/07	9:48	4739.81	50.1%	8.97	2.13	64.0	51.5	33.8	33.0	30.6	29.2	23.8	940	955	945	3.25	51.5	51.59	52.15	52.3	33.15	25.31	nd	0.925	0.65	23.49	5.15	bl
08/16/07	8:31	4761.17	50.2%	8.97	2.16	62.5	51.5	34.0	33.2	27.2	28.8	23.4	950	965	960	3.5	51.5	50.85	51.93	52.3	33.27	25.66	nd	0.924	0.68	23.84	5.15	bl
08/17/07	9:25	4784.47	50.2%	8.95	2.17	62.5	51.1	33.4	32.9	27.0	26.9	22.3	955	968	961	3.25	52.0	50.83	51.85	52.2	33.31	25.74	nd	0.923	0.67	23.9	5.12	bl
			MAP Average		2.12																							
			MAP Maximum		2.17																							
			MAP Minimum		1.98																							
Koch membranes - TFC 2822HF-400										**Membrane Ripening Period**																		
08/22/07	9:10	4805.09	42.3%	7.47	1.78	64.0	48.0	33.8	32.9	27.1	29.2	21.9	736	759	745	2.2	44.0	57.86	59.58	43.6	23.27	17.58	nd	0.899	0.95	15.6	4.68	bl
08/23/07	9:10	4827.55	42.5%	7.51	1.77	64.0	49.1	33.9	33.1	30.8	29.2	21.9	739	762	749	2.2	44.0	57.76	59.14	43.8	23.31	17.62	nd	0.900	0.95	15.6	4.81	bl
08/24/07	9:50	4850.52	42.4%	7.51	1.76	64.0	48.1	33.9	33.2	30.7	29.3	22.1	738	759	747	2.2	44.0	57.74	59.54	43.8	23.12	17.54	nd	0.897	0.95	15.6	4.65	bl
08/27/07	1:15	4856.07	42.6%	7.53	1.75	62.0	40.1	33.7	32.7	27.0	29.1	21.9	737	758	744	1.9	44.5	57.62	59.23	43.9	23.09	17.44	nd	0.903	0.94	15.6	3.77	bl
08/28/07	8:35	4875.27	42.6%	7.53	1.76	61.0	48.5	34.0	33.2	30.7	29.7	22.0	740	760	750	2.6	44.0	56.62	59.14	43.9	23.45	17.53	nd	0.900	0.95	15.6	4.70	bV
08/29/07	14:30	4903.54	42.7%	7.53	1.76	60.0	47.5	33.5	33.0	30.5	29.0	22.0	750	770	755	2.1	44.0	56.12	59.03	43.9	23.29	17.57	nd	0.901	0.95	15.7	4.80	bv
08/30/07	8:25	4919.93	42.5%	7.51	1.78	59.9	43.5	34.0	33.2	30.8	29.7	22.0	750	770	760	2.5	44.0	57.35	59.16	43.8	23.29	17.68	nd	0.902	0.95	15.8	4.10	bv
08/31/07	10:10	4942.55	42.6%	7.51	1.78	59.9	44.8	34.0	33.2	30.8	29.7	22.2	755	775	765	2.5	44.0	57.87	58.95	43.8	23.47	17.72	nd	0.902	0.95	15.8	4.25	bv
09/05/07	2:15	4977.24	42.3%	7.51	1.76	62.0	47.9	33.6	32.7	27.0	29.1	21.9	739	758	745	1.9	44.1	58.21	59.82	43.8	23.18	17.46	nd	0.902	1.04	15.5	4.05	bl
09/06/07	9:05	4994.49	42.5%	7.53	1.76	60.0	43.0	34.1	33.2	27.2	29.3	22.1	737	760	746	2.3	44.5	58.34	59.35	43.9	23.30	17.57	nd	0.905	1.05	15.6	4.05	bl
09/07/07	9:55	5019.27	42.3%	7.53	1.73	62.0	57.0	34.5	33.5	30.8	29.8	22.2	738	750	740	2.5	44.5	58.98	59.86	43.9	23.36	17.29	nd	0.898	1.00	15.3	5.90	bv
										12 Point flux and Recovery Period																		
09/11/07	13:00	5044.4	42.9%	5.98	1.67	62.0	42.0	32.0	31.5	30.0	29.8	25.0	710	725	720	1.1	35.0	44.54	46.50	34.9	18.47	13.23	nd	0.852	0.55	11.8	3.30	bv
09/12/07	16:15	5071.67	45.7%	5.98	1.72	61.8	48.0	32.0	31.5	30.0	29.8	26.0	750	760	755	1.1	35.0	38.86	41.39	34.9	18.59	13.63	nd	0.853	0.40	12.1	3.85	bv px out tds high.
10/03/07	9:35	5269.17	46.9%	5.98	1.67	62.0	49.5	32.8	32.2	30.5	30.0	25.7	730	740	735	1.5	35.0	39.58	46.02	34.9	18.69	13.20	nd	0.845	0.45	12.0	4.15	bv
09/13/07	15:45	5093.8	50.3%	5.98	1.82	60.0	38.0	32.0	31.5	30.0	29.8	27.0	800	810	805	1.1	35.0	32.29	34.47	34.9	19.78	14.44	nd	0.859	0.30	12.9	2.80	bv px out tds high.
10/19/07	9:20	5438.31	42.5%	7.47	1.79	58.0	58.9	29.0	28.2	25.3	23.9	16.9	745	767	759	2.7	44.5	57.81	58.92	43.6	23.38	17.76	nd	0.899	1.05	15.7	6.05	bl

TIME			CALCULATED PARAMETERS			TEMP	PRESSURES										FLOWS				MAIN PANEL KW METER				VFD KW METER			
		Operation	RO	Flux	Power		P_{MF-in}	P_{MF-out}	P_{CF-in}	P_{CF-out}	$P_{PX-Feed\ In}$	$P_{PX-conc\ out}$	$P_{PX-boost\ suct}$	P_{F-SYS}	P_{C-SYS}	P_{P-SYS}	$Q_{F-HP\ Pump}$	$Q_{PX\ Pump}$	$Q_{Feed\ PX-In}$	Q_{P-SYS}	A_{sys}	P HP/PX	P booster	Power	PX power	HP Power	Feed Pump	
Date	Time	Time	Recovery %	Gfd	kWh/m3	Influent	(psi)	(psi)	(psi)	(psi)	(psi)	(psi)	(psi)	(psi)	(psi)	(psi)	(gpm)	(gpm)	(gpm)	(gpm)	amp	(kw)	(kw)	Factor	(kw)	(kw)	(kw)	Notes
MM/DD/YY	hh:mm	hh.hh				Temp F	1	2	3	4	5	6	7	8	9	10	11	12	13	14	15	16	17	18	19	20	21	
10/10/07	14:00	5303.19	42.6%	7.54	1.77	59.0	41.4	34.2	33.3	27.0	29.4	22.0	739	759	725	3.2	44.5	57.62	59.36	44.0	23.51	17.68	nd	0.905	1.07	15.7	4.95	bl
10/11/07	8:35	5321.8	42.6%	7.53	1.77	58.0	49.3	35.0	34.1	27.8	29.8	22.6	742	762	751	3.1	44.5	57.99	59.16	43.9	23.23	17.61	nd	0.903	0.95	15.7	4.88	bl
10/18/07	9:35	5414.55	42.7%	7.53	1.77	58.0	47.1	35.1	34.1	27.8	29.8	22.1	741	764	751	2.8	44.5	57.86	59.03	43.9	23.48	17.67	nd	0.894	1.05	15.7	4.45	bl
10/02/07	8:25	5244.08	42.9%	7.54	1.74	61.0	46.8	34.8	34.0	31.0	29.9	22.6	735	755	750	3.1	44.0	57.13	58.53	44.0	22.82	17.35	nd	0.901	0.95	15.6	4.45	bv
09/14/07	16:35	5107.02	43.2%	7.51	1.77	60.0	46.0	34.0	33.0	30.5	29.0	22.0	750	765	760	2.2	44.0	57.32	57.55	43.8	23.06	17.58	nd	0.902	0.95	15.8	4.50	bv
09/17/07	14:40	5113.22	45.8%	7.51	1.79	60.0	39.0	33.2	32.7	30.4	29.3	23.7	767	784	778	2.2	44.5	49.68	51.84	43.8	23.31	17.79	nd	0.905	0.95	16.2	3.39	bl
10/04/07	16:00	5295.92	47.2%	7.51	1.80	63.0	50.0	33.0	32.5	30.0	29.5	24.0	795	810	800	2.1	44.0	43.06	47.48	43.8	23.57	17.92	nd	0.905	0.55	16.4	4.75	bv
09/18/07	9:00	5131.54	49.9%	7.47	1.88	62.0	45.0	33.1	32.5	27.1	29.7	25.3	820	835	825	2.4	44.5	42.41	43.85	43.6	24.65	18.57	nd	0.907	0.50	17.2	3.82	bl
09/19/07	12:15	5150.03	42.3%	8.93	1.82	63.0	49.6	35.9	34.9	27.8	29.5	19.6	759	785	768	3.6	52.0	69.56	70.98	52.1	28.52	21.58	nd	0.916	1.60	19.1	5.71	bl
09/20/07	9:26	5169.9	45.8%	8.95	1.86	62.0	48.2	35.1	34.2	27.6	29.6	21.8	798	822	805	3.6	52.0	60.16	61.85	52.2	28.64	22.05	nd	0.920	1.10	19.9	5.16	bl
09/21/07	11:13	5194.13	50.1%	8.90	1.93	63.0	48.3	34.1	33.3	26.9	29.4	23.8	845	864	855	3.4	52.0	50.22	51.77	51.9	29.64	22.79	nd	0.922	0.90	21.1	4.88	bl
10/17/07	9:00	5392.24	42.2%	9.98	1.89	58.5	52.3	32.1	30.7	23.1	23.7	11.9	788	831	805	5.1	57.5	77.42	79.64	58.2	33.30	24.95	nd	0.926	2.34	23.4	6.65	bl re-run point to avoid FWF water quali
09/25/07	14:08	5204.98	42.7%	9.98	1.89	65.0	49.5	36.7	35.3	27.1	29.1	16.9	768	805	785	4.3	57.0	77.36	77.97	58.2	32.80	25.01	nd	0.933	2.25	22.8	6.35	bl
10/16/07	14:30	5375.55	45.8%	9.96	1.97	60.0	54.1	30.2	29.1	22.2	23.4	14.9	829	863	843	4.3	58.0	66.68	68.78	58.1	33.81	25.95	nd	0.934	1.66	24.5	6.53	bl re-run point to avoid FWF water quali
09/26/07	17:00	5212.75	46.3%	9.98	1.89	65.0	52.0	35.5	34.2	30.8	29.0	20.0	810	840	825	4.2	57.0	66.96	67.62	58.2	32.50	25.03	nd	0.925	1.60	23.3	6.3	bv
10/11/07	14:00	5325.75	49.6%	10.01	2.00	59.0	43.2	35.8	34.5	27.2	29.4	22.2	874	899	882	4.7	58.0	56.62	59.37	58.4	34.64	26.59	nd	0.930	1.07	25.7	4.68	bl re-run point to avoid FWF water quali
10/12/07	9:08	5344.85	49.7%	9.98	2.03	59.0	55.9	35.8	34.7	27.6	29.5	22.4	877	900	885	4.8	58.0	56.75	58.99	58.2	34.78	26.78	nd	0.927	1.08	25.8	6.37	bl re-run point to avoid FWF water quali
09/27/07	15:50	5221.39	50.7%	9.99	1.96	65.0	54.8	34.8	33.5	30.5	29.2	22.3	860	885	875	4.2	57.0	55.57	56.60	58.3	33.76	25.91	nd	0.928	0.95	25.1	6.15	bv
										Most Affordable Point (MAP) Period																		
10/30/07	14:49	5470.29	44.7%	9.00	1.88	60.0	49.6	35.8	34.8	27.9	29.8	20.9	795	822	804	3.7	52.5	59.86	64.84	52.5	28.78	22.37	nd	0.922	1.25	20.1	5.4	bl
10/31/07	10:19	5487.88	44.9%	9.02	1.89	60.0	48.1	36.0	34.9	27.9	29.7	21.2	798	823	806	3.8	52.5	59.91	64.62	52.6	29.23	22.52	nd	0.922	1.27	20.2	5.21	bl
11/01/07	10:16	5510.05	45.5%	8.98	1.87	60.5	48.3	35.8	34.8	27.2	29.7	21.4	795	822	804	3.8	52.5	59.61	62.71	52.4	28.81	22.21	nd	0.921	1.23	20.0	5.13	bl
11/02/07	10:13	5532.28	45.6%	8.98	1.86	61.0	47.9	35.9	34.8	27.4	29.6	21.6	795	820	803	3.8	52.5	60.54	62.55	52.4	28.92	22.19	nd	0.919	1.25	19.9	5.1	bl
11/06/07	14:05	5556.71	46.1%	8.98	1.87	60.0	46.9	35.7	34.7	27.2	29.8	21.9	795	823	806	3.8	52.5	59.91	61.15	52.4	28.91	22.29	nd	0.922	1.21	20.2	4.95	bl
11/07/07	10:02	5574.64	46.2%	8.97	1.88	60.0	46.4	35.8	34.8	27.3	29.7	21.9	800	825	808	3.7	52.5	59.93	60.96	52.3	29.58	22.32	nd	0.922	1.25	20.1	4.7	bl
11/08/07	9:23	5596.15	45.4%	8.97	1.88	59.0	46.6	35.9	34.9	27.7	29.9	21.7	800	825	813	3.8	52.5	59.74	62.96	52.3	29.61	22.38	nd	0.923	1.24	20.2	4.78	bl
11/09/07	13:16	5621.67	45.1%	8.97	1.89	59.5	45.8	35.4	34.6	27.1	29.3	21.1	800	825	809	3.3	52.0	59.92	63.62	52.3	29.15	22.48	nd	0.919	1.30	20.1	4.87	bl
11/12/07	14:30	5625.97	45.3%	8.97	1.87	60.0	42.1	35.6	34.7	27.1	29.3	21.1	792	819	800	3.3	52.5	59.93	63.14	52.3	28.93	22.21	nd	0.922	1.33	20.0	4.41	bl
11/13/07	15:37	5651.08	45.3%	8.97	1.89	60.0	50.8	35.4	34.3	26.9	29.1	20.9	796	822	804	3.2	52.5	60.32	63.15	52.3	29.18	22.42	nd	0.917	1.36	20.0	5.59	bl
11/14/07	10:18	5668.07	45.2%	8.98	1.89	60.0	46.3	35.4	34.4	26.8	29.2	20.9	799	825	807	3.2	52.5	60.44	63.42	52.4	30.87	22.45	nd	0.924	1.38	20.1	5.05	bl
11/15/07	8:20	5688.28	45.1%	8.98	1.89	60.0	47.1	36.1	35.1	27.4	29.5	21.1	800	825	807	3.6	52.5	60.18	63.85	52.4	29.79	22.49	nd	0.924	1.37	20.2	5.1	bl
11/16/07	9:52	5712.08	45.3%	8.98	1.90	59.5	49.2	36.2	35.2	27.7	29.8	21.4	802	827	816	3.8	52.5	60.24	63.15	52.4	29.87	22.57	nd	0.923	1.33	20.2	5.42	bl
										Base Line Test																		
11/19/07	14:51	5717.84	42.3%	7.47	1.76	58.5	40.3	35.0	34.1	30.9	29.7	22.2	728	756	742	3.3	44.5	57.62	59.48	43.6	22.51	17.42	nd	0.903	1.15	15.4	3.77	bl
11/20/07	14:28	5741.45	42.8%	7.49	1.74	60.0	44.0	34.5	33.8	26.9	29.5	22.1	739	759	743	2.3	44.0	57.59	58.38	43.7	23.41	17.31	nd	0.904	1.05	15.4	4.39	bl
11/21/07	9:57	5760.93	42.6%	7.49	1.74	59.5	50.8	35.0	34.2	27.2	29.7	22.3	740	758	743	2.6	44.0	57.58	58.86	43.7	23.52	17.31	nd	0.903	1.05	15.4	5.14	bl
			MAP Average		1.88																							
			MAP Maximum		1.90																							
			MAP Minimum		1.86																							
Hydranautics membranes - SWC5										**Membrane Ripening Period**																		
11/28/07	14:45	5762.13	43.0%	7.51	1.79	60.0	40.0	34.4	33.5	26.8	29.0	22.2	760	775	770	2.4	44.2	57.54	58.12	43.8	24.02	17.80	nd	0.907	0.90	16.1	3.8	jm, hyd memb 1st point, ~1hr operation
11/29/07	15:10	5772.73	42.7%	7.47	1.79	59.0	42.0	34.8	33.8	30.5	29.8	22.2	770	785	780	2.5	44.0	57.84	58.43	43.6	23.65	17.72	nd	0.909	0.95	16.0	3.95	bv
11/30/07	14:20	5795.71	42.8%	7.47	1.79	58.0	48.0	35.0	34.2	30.8	29.5	23.5	770	785	778	2.5	44.0	57.04	58.31	43.6	23.64	17.72	nd	0.905	0.95	15.9	4.7	bv
12/03/07	16:10	5803.57	42.4%	7.51	1.77	57.0	42.0	35.5	34.8	31.2	30.0	22.5	765	780	775	3.0	44.0	56.82	59.47	43.8	23.39	17.65	nd	0.902	0.90	15.8	3.95	bl
12/04/07	9:24	5820.82	42.5%	7.49	1.79	56.5	46.4	35.6	34.8	27.8	29.9	22.7	762	780	773	3.1	44.0	57.44	59.12	43.7	23.73	17.73	nd	0.904	0.91	15.9	4.5	bl
12/05/07	8:24	5841.99	42.5%	7.49	1.79	57.5	46.3	35.2	34.7	27.6	29.9	22.4	761	782	775	2.9	44.0	57.74	59.22	43.7	23.41	17.78	nd	0.903	0.91	15.9	4.43	bl
12/06/07	9:15	5865.08	42.4%	7.49	1.78	58.0	46.1	35.6	34.8	27.4	29.9	22.4	759	779	770	2.9	44.0	57.62	59.34	43.7	23.42	17.68	nd	0.904	0.95	15.9	4.45	bl
12/07/07	8:30	5886.31	42.2%	7.51	1.78	58.0	47.8	35.7	35.0	27.8	29.9	22.7	760	780	772	3.1	44.0	57.26	59.96	43.8	23.42	17.66	nd	0.901	0.91	15.9	4.63	bl
12/10/07	15:44	5893.76	42.4%	7.49	1.77	56.5	41.8	35.2	34.4	27.1	29.9	22.2	760	777	765	2.6	44.0	57.13	59.25	43.7	23.31	17.59	nd	0.902	0.92	15.8	3.95	bl
12/11/07	14:45	5916.77	42.4%	7.49	1.78	57.0	47.1	35.3	34.6	27.2	29.9	22.3	760	780	770	2.6	44.0	57.14	59.45	43.7	23.42	17.63	nd	0.903	0.93	15.9	4.64	bl
12/12/07	9:59	5934.33	42.5%	7.51	1.78	56.5	44.9	35.9	35.1	27.9	30.1	22.9	762	782	772	3.2	44.0	58.21	59.36	43.8	23.61	17.69	nd	0.903	0.91	15.9	4.23	bl
12/13/07	9:20	5957.51	42.4%	7.51	1.79	55.5	48.9	36.2	35.6	28.2	30.1	23.0	762	782	775	4.3	44.0	58.73	59.46	43.8	23.55	17.76	nd	0.904	0.92	15.9	4.77	bl
12/14/07	8:47	5979.06	42.4%	7.51	1.79	56.0	46.9	36.4	35.6	28.2	30.2	23.1	765	785	777	3.4	44.0	58.26	59.53	43.8	23.47	17.79	nd	0.899	0.91	15.9	4.3	bl
										12 Point flux and Recovery Period																		
01/04/08	10:15	6044.01	43.0%	5.97	1.70	56.5	47.1	32.9	32.3	27.3	30.1	25.0	722	738	733	1.8	35.5	46.14	49.32	34.8	18.91	13.42	nd	0.844	0.55	12.3	3.95	bl
01/08/08	13:28	6072.97	47.1%	6.00	1.78	56.5	39.1	32.1	31.8	27.1	30.0	26.6	765	779	773	1.6	36.0	39.29	45.53	35	19.11	14.14	nd	0.854	0.41	13.1	2.97	bl

TIME			CALCULATED PARAMETERS			TEMP	PRESSURES										FLOWS				MAIN PANEL KW METER				VFD KW METER			
		Operation	RO	Flux	Power		P_{MF-in}	P_{MF-out}	P_{CF-in}	P_{CF-out}	$P_{PX-Feed\ In}$	$P_{PX-conc\ out}$	$P_{PX-boost\ suct}$	P_{F-SYS}	P_{C-SYS}	P_{P-SYS}	$Q_{F-HP\ Pump}$	$Q_{PX\ Pump}$	$Q_{Feed\ PX-In}$	Q_{P-SYS}	A_{sys}	P HP/PX	P booster	Power	PX power	HP Power	Feed Pump	
Date	Time	Time	Recovery %	Gfd	kWh/m3	Influent	(psi)	(psi)	(psi)	(psi)	(psi)	(psi)	(psi)	(psi)	(psi)	(psi)	(gpm)	(gpm)	(gpm)	(gpm)	amp	(kw)	(kw)	Factor	(kw)	(kw)	(kw)	Notes
MM/DD/YY	hh:mm	hh.hh				Temp F	1	2	3	4	5	6	7	8	9	10	11	12	13	14	15	16	17	18	19	20	21	
01/09/08	14:40	6098.13	51.4%	5.97	1.84	56.0	43.5	32.5	32.0	30.8	29.0	26.0	800	810	805	1.7	35.0	32.92	44.74	34.8	19.89	14.53	nd	0.861	0.30	13.1	3.4	bv
01/10/08	9:15	6116.76	42.4%	7.51	1.80	56.0	53.6	34.9	33.9	28.0	30.1	22.6	762	779	769	3.3	44.0	57.44	59.56	43.8	23.62	17.88	nd	0.903	0.89	16.2	5.33	bl
01/11/08	10:05	6139.91	46.0%	7.49	1.86	56.0	41.2	33.7	33.0	32.4	29.9	24.1	801	818	805	3.1	44.5	50.01	51.33	43.7	24.17	18.41	nd	0.908	0.74	19.8	3.61	bl
01/15/08	9:51	6164.8	47.1%	7.49	1.92	56.0	45.8	33.8	32.9	27.7	30.1	25.1	842	858	845	3.1	45.0	41.98	49.13	43.7	25.02	19.02	nd	0.911	0.46	17.8	4.04	bl
01/16/08	10:19	6187.17	42.6%	9.00	1.91	56.0	47.1	36.1	34.9	28.1	29.9	19.9	803	826	818	4.3	52.5	69.36	70.77	52.5	29.57	22.72	nd	0.919	1.49	20.3	5.23	bl
01/17/08	8:44	6207.86	45.8%	9.00	1.96	56.0	46.1	36.6	34.7	30.2	30.1	22.6	850	874	860	4.6	53.5	60.12	62.15	52.5	30.29	23.39	nd	0.923	1.03	21.4	4.59	bl
01/18/08	9:28	6229.25	49.1%	8.98	2.03	56.0	44.1	34.6	33.8	28.0	30.1	23.7	899	918	905	5.8	53.5	50.74	54.42	52.4	31.37	24.12	nd	0.926	0.87	22.5	4.22	bl
01/23/08	9:11	6252.9	42.4%	9.99	1.97	55.0	52.2	37.6	36.2	28.8	30.0	18.1	815	847	829	5.6	58.0	77.29	79.24	58.3	33.58	26.05	nd	0.922	2.19	23.7	6.65	bl
01/30/08	11:15	6291.76	45.4%	9.98	1.99	56.5	48.2	36.7	35.3	28.2	29.9	20.1	847	878	861	5.3	58.0	67.21	70.02	58.2	34.18	26.31	nd	0.917	1.42	24.4	5.67	bl
01/31/08	9:10	6311.85	49.0%	9.99	2.06	56.0	46.1	36.1	35.1	28.3	30.2	22.9	902	922	916	5.8	58.0	56.47	60.72	58.3	35.53	27.21	nd	0.922	0.94	26.3	4.85	bl
										Base Line Test																		
02/01/08	9:07	6333.97	42.7%	7.51	1.80	54.5	42.7	34.8	34.0	28.6	30.2	22.1	764	783	778	3.4	44.5	57.93	58.86	43.8	23.94	17.87	nd	0.896	0.91	16.1	3.85	bl
										Most Affordable Point (MAP) Period																		
02/05/08	2:18	6365.02	45.6%	9.05	1.97	55.5	50.1	35.2	34.1	27.9	29.9	21.8	844	868	859	4.2	53.5	60.34	62.96	52.8	30.68	23.64	nd	0.916	1.05	21.5	5.47	bl
02/06/08	4:25	6389.4	45.2%	8.98	1.93	56.0	43.1	35.1	34.1	27.8	29.9	21.6	838	859	843	3.9	53.0	59.92	63.46	52.4	29.86	22.95	nd	0.912	1.02	20.9	4.49	bl
02/07/08	10:22	6407.35	45.2%	8.98	1.95	56.0	46.4	35.3	34.5	28.1	29.9	21.8	840	861	850	5.6	53.0	59.88	63.61	52.4	30.25	23.17	nd	0.912	1.01	21.0	4.91	bl
02/08/08	11:04	6430.12	45.0%	8.97	1.94	56.0	43.1	35.1	34.2	27.7	29.8	21.4	840	860	845	3.8	52.5	60.19	63.84	52.3	30.18	23.08	nd	0.912	0.98	20.9	4.52	bl
02/12/08	9:00	6455.09	45.9%	9.02	1.94	57.0	47.2	35.3	34.2	27.9	29.9	22.0	839	859	845	4.2	53.5	60.31	61.98	52.6	30.44	23.13	nd	0.912	1.01	21.3	5.14	bl
02/13/08	10:45	6478.85	45.9%	9.02	1.95	57.0	46.0	35.3	34.2	27.9	29.9	22.1	840	861	850	4.2	53.5	60.67	61.89	52.6	30.52	23.29	nd	0.913	1.03	21.2	4.75	bl
02/14/08	11:20	6501.59	45.7%	9.02	1.95	56.0	44.1	35.3	34.2	27.8	29.9	22.1	843	865	858	4.2	53.5	59.74	62.46	52.6	30.67	23.34	nd	0.914	1.01	21.3	4.66	bl
02/15/08	9:08	6523.37	45.6%	9.03	1.95	55.0	49.1	35.8	34.7	28.2	30.1	22.1	843	865	856	4.5	53.5	59.76	62.78	52.7	30.43	23.38	nd	0.913	1.02	21.4	5.28	bl
02/19/08	13:05	6547.73	45.6%	9.03	1.94	56.0	45.0	35.5	34.5	31.7	30.0	22.3	845	865	855	4.5	53.7	59.21	62.97	52.7	30.29	23.20	nd	0.914	1.00	21.1	4.7	bv
02/20/08	10:07	6566.39	46.0%	9.02	1.95	56.0	48.4	35.3	34.2	27.8	29.9	22.0	841	861	850	4.5	53.5	59.88	61.85	52.6	30.41	23.31	nd	0.913	1.03	21.2	5.24	bl
	MAP Average		45.6%	9.01	1.95	56.1																						
	MAP Maximum		46.0%	9.05	1.97	57.0																						
	MAP Minimum		45.0%	8.97	1.93	55.0																						
										Base Line Test																		
02/21/08	9:15	6587.62	42.2%	7.51	1.80	56.0	42.1	34.6	33.8	27.9	30.0	22.5	763	782	777	3.1	45.0	57.53	59.91	43.8	23.76	17.87	nd	0.893	0.89	16.1	3.99	bl
02/22/08	9:58	6612.33	42.2%	7.51	1.81	56.0	46.9	34.3	33.6	27.4	29.9	22.4	760	780	773	2.8	44.5	57.92	60.11	43.8	23.71	17.96	nd	0.894	0.91	16.1	4.54	bl
DOW-FILMTEC Hybrid 1 SW30XHR-400i - 1 SW30XLE-400i - 5 XUS-259124 x 3 vessels										**Membrane Ripening Period**																		
02/27/08	11:25	6631.98	42.2%	7.51	1.75	58.0	41.2	33.8	33.0	26.9	29.3	22.0	744	762	755	2.2	44.5	58.02	60.04	43.8	23.33	17.39	nd	0.893	0.89	15.4	3.94	bl
02/28/08	9:25	6653.99	42.5%	7.53	1.76	57.0	45.2	34.6	33.7	27.4	29.9	22.1	744	765	759	2.8	44.5	57.93	59.48	43.9	23.65	17.51	nd	0.889	0.85	15.7	4.38	bl
02/29/08	9:46	6676.55	42.4%	7.51	1.75	58.0	42.4	44.5	33.6	27.3	29.9	22.1	745	763	755	2.7	44.5	57.81	59.49	43.8	23.26	17.41	nd	0.888	0.88	15.6	4.06	bl
03/04/08	9:26	6699.51	42.0%	7.53	1.75	56.0	47.9	34.6	33.7	27.3	29.9	22.2	742	761	753	2.7	44.5	57.81	60.61	43.9	23.23	17.43	nd	0.886	0.91	15.5	4.74	bl
03/05/08	9:39	6721.62	42.2%	7.53	1.75	56.0	42.2	34.4	33.6	27.4	29.9	21.9	744	763	758	2.7	45.0	57.73	60.01	43.9	23.43	17.47	nd	0.886	0.90	15.7	4.04	bl
03/06/08	9:53	6745.85	42.5%	7.51	1.76	56.5	46.9	34.3	33.6	27.3	29.9	22.4	745	763	758	2.7	44.5	57.96	59.18	43.8	23.27	17.52	nd	0.887	0.94	15.5	4.58	bl
03/07/08	10:34	6768.52	42.3%	7.49	1.75	58.0	44.1	34.1	33.2	29.1	29.9	22.2	747	763	758	2.3	44.5	57.43	59.64	43.7	23.45	17.41	nd	0.889	0.89	15.7	4	bl
03/11/08	10:21	6794.4	42.4%	7.51	1.76	57.0	42.3	34.4	33.5	27.3	29.9	22.0	745	768	760	2.3	44.5	57.61	59.42	43.8	23.64	17.51	nd	0.887	0.91	15.6	4.11	bl
03/12/08	12:42	6820.72	42.4%	7.53	1.76	57.0	47.5	34.5	33.8	28.0	30.0	22.2	750	770	760	2.8	44.0	58.57	59.75	43.9	23.72	17.55	nd	0.884	0.90	15.8	4.65	bv
03/13/08	12:15	6842.29	42.6%	7.56	1.75	57.0	43.0	34.5	33.0	31.0	29.8	22.0	750	770	765	2.6	44.0	58.70	59.48	44.1	23.59	17.56	nd	0.887	0.90	15.8	4.25	bv
03/18/08	10:48	6884.52	42.4%	7.53	1.79	54.5	52.2	34.8	33.9	27.6	30.0	22.6	758	778	765	3	45.0	58.02	59.74	43.9	23.64	17.82	nd	0.889	1.04	15.8	5.27	bl
										12 Point flux and Recovery Period																		
03/19/08	10:54	6906.91	43.0%	6.00	1.66	54.5	40.4	33.5	32.9	27.6	30.1	24.5	704	720	715	2.1	36.0	46.32	51.36	35	18.72	13.23	nd	0.832	0.61	11.4	3.31	bl Unbalanced PX to compensate low flo
03/20/08	10:01	6930.05	47.1%	6.00	1.69	54.5	43.6	33.1	32.8	27.6	29.9	25.1	735	743	739	2.1	36.5	39.36	48.66	35	19.27	13.45	nd	0.836	0.45	12.2	3.6	bl Unbalanced PX to compensate low flo
03/21/08	9:31	6951.88	50.8%	5.95	1.79	56.0	38.1	33.1	32.5	27.2	30.1	25.8	780	788	784	2.1	36.0	33.57	46.42	34.7	19.71	14.11	nd	0.834	0.28	12.9	2.95	bl Unbalanced PX to compensate low flo
03/25/08	10:05	6977.77	42.3%	7.51	1.77	55.0	45.4	34.8	33.8	27.9	29.9	22.1	753	771	761	3.2	45.0	57.79	59.85	43.8	23.32	17.59	nd	0.887	0.94	15.7	4.35	bl
03/26/08	9:59	6999.91	46.5%	7.49	1.79	56.0	42.2	34.1	33.4	27.5	29.9	23.4	781	798	787	2.9	45.0	50.22	53.12	43.7	23.77	17.81	nd	0.891	0.75	16.3	3.77	bl unbalanced PX was operator error
04/08/08	9:39	7138.64	50.9%	7.53	1.89	55.0	46.9	34.4	33.9	29.2	29.9	24.2	830	843	839	2.9	45.6	42.42	51.54	43.9	25.03	18.82	nd	0.893	0.48	17.5	4.38	bl Unbalanced PX to compensate low flo
03/27/08	10:06	7024.03	50.9%	7.49	1.86	56.0	47.9	33.9	33.1	31.1	29.9	24.7	722	738	728	2.7	45.0	42.18	50.54	43.7	24.49	18.46	nd	0.893	0.47	18.1	4.39	bl, feed pressure went down but recover
04/01/08	13:30	7060.47	42.1%	9.00	1.89	55.0	52.5	37.0	35.5	28.0	29.8	19.5	790	815	800	4.4	53.0	71.14	72.34	52.5	29.59	22.49	nd	0.909	1.60	19.8	6.15	bv
04/04/08	12:01	7115.52	46.7%	9.02	1.91	56.0	52.6	36.3	35.2	27.6	29.9	21.1	825	845	838	4.1	53.5	59.92	63.94	52.6	29.84	22.77	nd	0.908	1.02	20.7	5.86	bl unbalanced PX was operator error
04/09/08	10:09	7160.95	50.8%	8.98	2.00	54.0	50.0	36.0	35.1	27.6	29.9	23.1	885	900	895	4.2	54.0	50.76	56.85	52.4	31.24	23.78	nd	0.911	0.84	22.0	5.28	bl unbalanced PX was operator error
04/10/08	9:32	7182.71	55.9%	8.98	2.10	54.0	46.6	35.8	34.9	27.7	29.9	24.1	940	951	944	4.2	54.0	41.34	53.03	52.4	32.65	24.96	nd	0.915	0.49	23.4	4.67	bl Unbalanced PX to compensate low flo
04/11/08	9:45	7205.34	42.7%	10.03	1.99	56.0	52.1	36.8	35.2	26.9	27.3	15.2	827	860	842	5.4	58.0	77.27	78.62	58.5	34.63	26.38	nd	0.918	1.98	24.2	6.65	bl
04/16/08	9:23	7235.23	46.6%	9.98	2.01	56.0	53.5	34.4	33.1	24.2	25.4	15.8	858	883	873	5.5	58.5	66.76	71.23	58.2	34.75	26.58	nd	0.911	1.48	24.9	6.54	bl unbalanced PX was operator error

TIME			CALCULATED PARAMETERS			TEMP	PRESSURES										FLOWS				MAIN PANEL KW METER				VFD KW METER			
		Operation	RO	Flux	Power		P_{MF-in}	P_{MF-out}	P_{CF-in}	P_{CF-out}	$P_{PX-Feed\ In}$	$P_{PX-conc\ out}$	$P_{PX-boost\ suct}$	P_{F-SYS}	P_{C-SYS}	P_{P-SYS}	$Q_{F-HP\ Pump}$	$Q_{PX\ Pump}$	$Q_{Feed\ PX-In}$	Q_{P-SYS}	A_{sys}	P HP/PX	P booster	Power	PX power	HP Power	Feed Pump	
Date	Time	Time	Recovery %	Gfd	kWh/m3	Influent	(psi)	(psi)	(psi)	(psi)	(psi)	(psi)	(psi)	(psi)	(psi)	(psi)	(gpm)	(gpm)	(gpm)	(gpm)	amp	(kw)	(kw)	Factor	(kw)	(kw)	(kw)	Notes
MM/DD/YY	hh:mm	hh.hh				Temp F	1	2	3	4	5	6	7	8	9	10	11	12	13	14	15	16	17	18	19	20	21	
04/17/08	8:05	7255.32	50.7%	9.96	2.06	56.0	52.6	38.4	37.3	27.5	30.0	22.1	905	925	919	5.6	58.5	56.51	61.17	58.1	35.15	27.24	nd	0.921	0.97	26.0	5.99	bl unbalanced PX was operator error
										Base Line Test																		
04/18/08	9:14	7278.18	42.2%	7.47	1.79	56.0	49.1	37.5	36.6	27.2	29.9	20.0	760	781	773	3.1	45.5	57.61	59.66	43.6	23.85	17.73	nd	0.881	0.91	16.0	4.95	bl
										Most Affordable Point (MAP) Period																		
04/23/08	7:29	7295.88	46.2%	9.02	1.96	55.0	56.9	34.3	33.1	24.8	26.2	18.7	845	868	860	4.6	54.0	59.84	61.14	52.6	30.75	23.39	nd	0.905	0.97	21.3	6.29	bl
04/24/08	7:58	7318.55	46.7%	9.02	1.95	54.0	53.9	38.6	37.4	30.2	30.0	22.1	840	862	853	4.6	54.0	59.95	62.86	52.6	30.45	23.24	nd	0.905	1.05	21.1	5.95	bl unbalanced PX was operator error
04/25/08	7:53	7340.62	46.5%	9.00	1.95	54.5	52.9	38.8	37.7	27.6	29.9	21.6	842	865	858	4.4	53.5	60.41	62.76	52.5	30.44	23.22	nd	0.909	1.01	21.2	5.86	bl unbalanced PX was operator error
04/29/08	9:40	7364.91	46.8%	9.02	1.92	56.0	55.6	38.1	37.1	27.0	29.1	20.9	824	847	839	4.1	53.0	59.83	65.14	52.6	30.05	22.94	nd	0.915	1.17	20.8	6.39	bl unbalanced PX was operator error
04/30/08	10:48	7388.17	46.6%	9.02	1.92	56.0	55.1	39.3	38.2	27.3	29.8	20.8	833	858	841	4.1	53.0	60.26	64.96	52.6	30.12	22.95	nd	0.912	1.08	20.9	6.4	bl unbalanced PX was operator error
05/01/08	12:32	7412.33	46.6%	8.98	1.94	56.0	55.1	38.9	37.6	26.2	28.2	19.9	825	851	839	3.9	53.0	60.08	64.74	52.4	30.51	23.09	nd	0.905	1.25	20.8	6.38	bl unbalanced PX was operator error
05/02/08	8:36	7430.85	46.7%	9.02	1.93	56.0	53.1	41.3	40.2	27.8	29.9	20.8	828	855	840	4.1	53.0	60.03	65.42	52.6	30.29	23.03	nd	0.907	1.07	20.9	6	bl unbalanced PX was operator error
Toray membranes - TM800E-400 (Set 2)										**Membrane Ripening Period**																		
05/16/08	10:10	7475.52	42.5%	7.46	1.87	62.0	42.1	35.6	34.7	26.8	29.2	21.9	795	815	800	2.1	44.5	57.58	58.94	43.5	25.04	18.52	nd	0.893	0.94	16.7	4.35	bl
05/20/08	8:56	7554.92	42.6%	7.51	1.90	59.0	43.9	36.2	35.3	31.1	29.9	22.5	803	825	817	2.8	45.0	57.63	59.11	43.8	25.45	18.89	nd	0.892	0.99	17.0	4.55	bl
05/21/08	8:43	7578.71	42.5%	7.51	1.92	57.0	44.8	36.3	35.4	31.0	29.8	22.1	818	839	824	2.7	45.0	57.67	59.14	43.8	25.52	19.09	nd	0.895	0.94	17.2	4.68	bl
05/22/08	8:50	7602.85	42.6%	7.51	1.91	57.0	45.5	36.5	35.7	31.1	29.2	22.0	815	837	822	2.7	45.0	57.48	59.13	43.8	25.45	19.01	nd	0.893	0.93	17.2	4.85	bl
05/23/08	9:47	7622.36	42.6%	7.51	1.94	56.0	58.1	37.0	36.1	28.4	29.8	22.1	824	843	835	2.7	45.0	57.74	58.92	43.8	25.65	19.26	nd	0.894	0.97	17.4	5.51	bl
05/28/05	9:02	7644.67	42.5%	7.51	1.89	59.0	51.0	39.7	38.8	28.6	29.8	22.2	800	820	810	2.6	45.0	57.79	59.26	43.8	25.02	18.77	nd	0.893	0.97	16.9	5.23	bl
05/29/08	9:15	7666.9	42.6%	7.53	1.90	58.0	57.3	39.2	38.4	28.2	29.9	22.3	810	833	819	2.6	45.0	58.07	59.12	43.9	25.51	18.95	nd	0.891	0.96	17.0	6.06	bl
05/30/08	9:43	7689.43	42.5%	7.51	1.91	58.0	51.4	40.1	38.7	28.2	29.8	22.3	808	830	820	2.6	45.0	58.21	59.31	43.8	25.64	18.95	nd	0.893	0.97	17.1	5.25	bl
										12 Point flux and Recovery Period																		
06/03/08	10:40	7716.07	42.9%	6.07	1.85	56.0	42.8	35.4	34.9	29.8	29.9	25.1	784	800	895	1.6	37.0	45.40	47.06	35.4	20.93	14.88	nd	0.852	0.57	13.2	3.55	bl
06/04/08	9:04	7738.45	46.9%	6.03	1.90	56.0	47.2	36.1	35.5	29.9	29.9	24.9	811	821	818	2.6	37.0	39.85	49.06	35.2	21.27	15.18	nd	0.832	0.44	13.9	4.09	bl Unbalanced PX to compensate low flo
06/05/08	9:01	7760.47	49.8%	6.02	1.91	56.0	42.5	35.9	35.3	28.1	29.9	25.7	839	844	840	1.6	37.0	35.36	44.74	35.1	21.21	15.21	nd	0.844	0.34	13.9	3.47	bl Unbalanced PX to compensate low flo
06/06/08	8:58	7784.41	42.6%	7.51	1.92	56.0	52.4	39.0	38.2	28.4	29.8	22.1	820	840	828	3.6	45.0	58.07	58.96	43.8	25.57	19.09	nd	0.891	0.95	17.2	5.41	bl
06/10/08	8:40	7808.46	46.0%	7.51	1.91	62.0	48.3	37.1	36.5	28.1	29.8	23.8	828	846	840	2.6	44.5	50.05	51.34	43.8	25.41	18.95	nd	0.894	0.91	17.3	4.48	bl
06/11/08	9:58	7831.83	50.8%	7.49	1.96	62.0	45.6	37.7	36.9	27.8	29.7	24.3	863	879	870	2.3	44.5	42.37	49.35	43.7	26.21	19.41	nd	0.897	0.50	17.9	4.31	bl
06/12/08	9:19	7855.19	44.0%	8.98	2.06	62.0	54.1	29.3	28.3	17.9	17.9	9.2	850	880	862	2.3	52.5	69.91	66.56	52.4	32.21	24.47	nd	0.913	1.60	21.8	6.41	bl px inlet maxed out at value
06/24/08	8:40	7999.57	42.6%	8.98	2.02	60.0	53.0	41.9	40.9	38.9	29.6	19.1	840	875	857	3.8	52.0	69.15	70.62	52.4	31.91	24.02	nd	0.907	1.59	21.3	6.37	bl
06/13/08	9:38	7877.97	46.2%	9.00	2.04	62.0	55.4	38.1	37.1	25.3	25.0	18.6	878	900	886	2.6	53.0	60.26	61.10	52.5	32.13	24.29	nd	0.905	1.05	22.2	6.34	bl
06/17/08	13:15	7907.97	50.0%	9.00	2.14	60.0	54.5	40.5	39.5	30.8	29.5	23.0	950	965	955	4.5	52.0	51.45	52.48	52.5	33.75	25.50	nd	0.915	0.95	23.8	6	bv
06/18/08	15:05	7931.88	43.5%	9.91	2.16	60.0	51.0	37.0	35.5	23.5	21.5	10.8	890	925	910	4.5	58.0	76.97	75.22	57.8	37.46	28.32	nd	0.923	2.15	26.6	6.7	bv, valve on px open all the way
06/19/08	17:45	7956.48	45.7%	9.94	2.12	62.0	52.0	38.0	37.0	25.0	23.5	14.0	910	935	920	4	58.0	67.72	68.83	58	36.27	27.93	nd	0.927	1.50	26.6	6.5	bv
06/20/08	12:25	7975.14	49.3%	9.94	2.18	61.0	53.5	35.0	34.0	21.5	22.0	14.5	960	980	970	4.3	58.0	56.67	59.60	58	37.60	28.67	nd	0.927	1.00	28.3	6.4	bv
06/25/08	9:05	8022.25	42.6%	7.47	1.89	60.0	49.4	41.3	40.6	28.2	29.7	22.3	798	819	805	2.5	44.5	57.43	58.84	43.6	25.15	18.67	nd	0.887	0.95	16.8	5.07	bl
										Most Affordable Point (MAP) Period																		
06/27/08	8:32	8052.85	45.6%	8.97	2.04	60.0	46.9	41.1	40.0	31.4	29.2	21.2	875	899	882	3.6	52.5	60.34	62.35	52.3	31.99	24.18	nd	0.910	1.10	22.1	5.63	bl
06/30/08	9:15	8125.55	45.5%	8.98	2.05	61.0	46.9	40.9	39.8	31.5	29.5	21.3	884	912	900	3.7	52.5	59.85	62.76	52.4	32.50	24.45	nd	0.909	1.10	22.3	5.58	bl
07/08/08	8:54	8236.56	46.0%	9.00	2.03	62.0	46.1	40.2	39.1	30.8	29.4	21.4	875	898	883	3.7	52.5	60.21	61.75	52.5	32.06	24.16	nd	0.909	1.05	22.1	5.42	bl
07/09/08	9:35	8261.25	42.4%	7.49	1.87	63.0	43.9	38.9	37.8	30.5	29.7	22.0	785	805	797	1.8	44.0	57.62	59.43	43.7	25.31	18.53	nd	0.889	0.91	16.6	4.79	bl
DOW-FILMTEC - SW30XHR-400i high boron rejection										**Membrane Ripening Period**																		
09/24/08	15:29	8263.81	42.1%	7.46	2.04	63.0	34.1	33.1	32.2	30.2	29.3	21.9	845	864	859	2.1	44.0	57.81	59.91	43.5	26.50	20.14	nd	0.905	0.82	18.3	3.58	bl
09/25/08	9:25	8281.77	42.3%	7.51	2.03	62.0	34.6	33.7	32.8	30.7	29.8	22.0	858	875	861	2.5	44.0	57.77	59.73	43.8	26.78	20.19	nd	0.905	0.93	18.1	3.56	bl
09/26/08	9:13	8305.56	42.3%	7.51	2.05	62.0	34.5	33.5	32.7	30.5	29.6	21.9	861	881	875	2.3	44.0	57.89	59.81	43.8	27.12	20.39	nd	0.905	0.93	18.3	3.58	bl
09/29/08	15:15	8321.91	42.2%	7.51	2.01	61.0	34.0	32.9	31.9	29.8	29.0	21.4	840	860	850	1.8	44.0	58.11	60.04	43.8	26.42	19.98	nd	0.904	0.96	17.9	3.58	bl
09/30/08	12:15	8351.1	42.2%	7.51	2.02	60.0	34.3	32.9	31.9	29.3	28.5	21.0	853	870	860	1.8	44.0	57.56	60.01	43.8	27.11	20.12	nd	0.898	0.92	18.1	3.65	bl
10/07/08	7:45	8391.5	42.4%	7.53	1.92	64.0	34.9	33.5	32.2	29.9	28.7	21.2	805	825	818	2.3	44.5	58.04	59.52	43.9	25.53	19.18	nd	0.889	0.86	17.3	3.6	bl
10/08/08	9:22	8415.65	42.3%	7.53	1.93	65.0	34.7	33.1	32.0	29.3	28.2	20.5	805	825	818	1.8	44.0	57.95	59.96	43.9	26.05	19.23	nd	0.892	0.93	17.2	3.59	bl
10/16/08	8:46	8435.86	41.7%	7.51	1.96	61.0	35.1	34.2	33.3	31.0	29.9	21.9	830	847	840	2.6	45.0	57.43	61.35	43.8	26.16	19.54	nd	0.886	0.88	17.5	3.73	bl
10/17/08	9:37	8460.71	42.0%	7.53	1.95	61.0	35.2	34.3	33.4	30.9	29.8	21.9	829	847	840	2.5	45.0	57.35	60.72	43.9	26.38	19.49	nd	0.888	0.86	17.7	3.63	bl
10/20/08	9:30	8532.58	42.2%	7.53	1.96	60.0	35.8	34.8	34.0	31.1	29.9	22.1	836	855	842	2.8	45.0	57.47	60.12	43.9	25.75	19.51	nd	0.904	0.89	17.5	3.65	bl
10/21/08	9:30	8556.6	42.2%	7.53	1.93	61.0	35.6	34.7	33.8	31.1	29.9	22.1	824	841	837	2.7	45.0	58.08	60.17	43.9	26.15	19.27	nd	0.887	0.87	17.4	3.64	bl
10/22/08	9:47	8577.75	42.0%	7.51	1.91	64.0	34.7	33.8	32.9	30.1	29.2	21.3	815	830	821	1.7	44.0	57.63	60.46	43.8	25.78	18.96	nd	0.887	0.85	17.1	3.63	bl
10/23/08	9:00	8600.98	42.1%	7.47	1.92	64.0	35.0	34.1	33.2	30.3	29.4	21.5	815	834	822	2.1	44.0	57.53	60.05	43.6	25.79	18.99	nd	0.887	0.86	17.1	3.72	bl

TIME			CALCULATED PARAMETERS			TEMP	PRESSURES										FLOWS				MAIN PANEL KW METER				VFD KW METER			
		Operation	RO	Flux	Power		P_{MF-in}	P_{MF-out}	P_{CF-in}	P_{CF-out}	$P_{PX-Feed\ In}$	$P_{PX-conc\ out}$	$P_{PX-boost\ suct}$	P_{F-SYS}	P_{C-SYS}	P_{P-SYS}	$Q_{F-HP\ Pump}$	$Q_{PX\ Pump}$	$Q_{Feed\ PX-In}$	Q_{P-SYS}	A_{sys}	P HP/PX	P booster	Power	PX power	HP Power	Feed Pump	
Date	Time	Time	Recovery %	Gfd	kWh/m3	Influent	(psi)	(psi)	(psi)	(psi)	(psi)	(psi)	(psi)	(psi)	(psi)	(psi)	(gpm)	(gpm)	(gpm)	(gpm)	amp	(kw)	(kw)	Factor	(kw)	(kw)	(kw)	Notes
MM/DD/YY	hh:mm	hh.hh				Temp F	1	2	3	4	5	6	7	8	9	10	11	12	13	14	15	16	17	18	19	20	21	
10/24/08	11:10	8627.13	42.3%	7.51	1.91	65.0	34.5	33.6	32.8	30.1	29.2	21.4	819	835	822	1.8	44.5	57.47	59.72	43.8	25.88	19.01	nd	0.883	0.84	17.1	3.68	bl
10/27/08	10:03	8698	42.2%	7.49	1.92	64.0	35.3	34.3	33.5	31.0	29.8	22.0	816	833	822	2.5	44.5	57.73	59.86	43.7	25.60	19.03	nd	0.883	0.85	17.0	3.69	bl
10/28/08	9:01	8720.98	42.4%	6.02	1.82	63.0	33.4	32.9	32.2	30.5	29.9	24.8	779	784	781	1.5	36.5	46.45	47.72	35.1	20.78	14.51	nd	0.826	0.50	13.1	2.97	bl
10/29/08	9:39	8745.61	45.4%	5.98	1.91	63.0	33.0	32.5	32.1	30.3	29.9	26.1	820	825	821	1.4	36.5	39.94	41.99	34.9	21.52	15.11	nd	0.831	0.35	13.4	2.77	bl
11/22/08	10:07	9203.47	51.2%	6.00	1.93	60.0	41.7	41.0	40.5	30.1	29.7	24.9	835	841	839	1.2	37.5	33.42	47.02	35	21.91	15.32	nd	0.836	0.29	15.0	3.89	bl Unbalanced PX to compensate low flo
10/31/08	10:09	8790.83	42.6%	7.49	1.91	64.0	35.6	34.6	33.7	30.5	29.5	21.9	819	838	825	2.2	44.0	57.52	58.89	43.7	25.62	18.93	nd	0.885	0.78	17.0	3.68	bl
11/03/08	9:56	8863.61	46.0%	7.53	1.97	64.0	36.5	35.8	35.0	30.2	29.7	23.1	860	878	865	2.3	44.5	49.75	51.62	43.9	26.51	19.67	nd	0.885	0.60	18.1	3.61	bl
11/21/08	10:14	9179.6	51.1%	7.54	1.99	60.0	42.7	41.8	40.9	30.5	29.5	22.5	860	880	870	2.3	45.5	42.10	54.16	44	26.91	19.93	nd	0.889	0.85	18.1	4.45	bl Unbalanced PX to compensate low flo
11/05/08	9:53	8911.56	41.8%	8.98	2.10	62.0	41.2	39.9	38.8	31.2	29.8	18.9	882	907	899	4	52.0	69.51	73.02	52.4	33.11	25.01	nd	0.908	1.47	22.5	5.14	bl
11/06/08	9:14	8931.39	45.4%	9.00	2.14	61.0	40.6	39.2	38.1	31.1	29.8	21.3	927	945	940	3.8	52.5	60.22	63.04	52.5	33.82	25.54	nd	0.911	0.98	23.5	4.72	bl
11/19/08	10:25	9143.04	50.5%	9.03	2.14	62.0	43.9	42.8	41.8	31.1	29.9	22.4	940	960	950	4.3	53.5	51.72	61.95	52.7	30.21	25.65	nd	0.921	0.95	23.7	5.28	bl Unbalanced PX to compensate low flo
11/11/08	10:01	9018.95	42.1%	9.91	2.25	58.0	47.2	45.5	44.1	31.8	29.7	17.1	940	970	957	5	58.0	77.38	79.56	57.8	38.44	29.48	nd	0.916	2.10	27.1	6.56	bl
11/14/08	9:29	9064.59	45.1%	9.84	2.25	60.0	45.7	44.2	42.9	30.7	29.0	19.0	970	995	981	4	58.0	67.55	69.98	57.4	38.57	29.28	nd	0.917	1.32	28.2	6.07	bl
11/17/08	13:38	9119.69	50.2%	9.87	2.24	63.0	45.2	44.0	42.9	30.1	29.1	21.1	985	1002	998	4.6	58.0	57.16	61.08	57.6	38.57	29.36	nd	0.933	0.91	28.8	5.72	bl Unbalanced PX to compensate low flo
11/26/08	9:03	9246.48	42.1%	7.53	1.94	60.0	46.4	45.5	44.8	31.0	29.8	21.9	815	838	822	2.6	44.0	57.42	60.28	43.9	26.13	19.38	nd	0.882	1.11	17.2	5.16	bl, base line
										Most Affordable Point (MAP) Period																		
11/30/08	12:50	9329.46	47.6%	8.98	2.13	62.0	49.8	48.8	47.5	31.0	29.6	22.5	940	950	945	4	53.0	50.84	57.62	52.4	32.58	25.35	nd	0.921	0.80	23.4	5.8	bv
12/01/08	9:28	9350.52	46.9%	8.98	2.13	61.0	51.3	50.2	49.1	31.1	29.9	22.2	935	955	941	3.9	54.0	50.74	59.31	52.4	33.34	25.37	nd	0.905	0.90	23.3	6.14	bl
12/02/08	9:58	9368.92	46.2%	8.98	2.15	61.0	36.0	34.8	33.8	31.1	29.9	22.1	939	958	943	3.9	52.5	51.48	61.01	52.4	33.79	25.56	nd	0.909	0.98	23.5	4.08	bl
12/03/08	15:30	9389.96	46.2%	9.00	2.13	62.0	35.9	34.6	33.5	31.0	29.9	21.9	925	945	939	3.6	52.5	50.74	61.02	52.5	33.15	25.39	nd	0.910	0.96	23.3	4.18	bl
12/04/08	14:00	9412.37	45.9%	9.00	2.13	62.0	36.0	34.8	34.0	31.0	29.9	21.8	935	955	920	3.8	53.0	50.43	61.95	52.5	33.51	25.43	nd	0.907	1.00	23.5	4.15	bv
12/09/08	9:23	9451.21	46.0%	8.98	2.16	60.0	37.0	35.8	34.8	31.5	30.0	21.7	942	961	955	4.1	53.5	50.92	61.58	52.4	33.95	25.65	nd	0.910	0.92	23.7	4.18	bl
12/10/08	14:54	9480.03	46.6%	8.95	2.16	60.0	36.8	35.5	34.5	30.9	29.7	22.0	942	962	955	3.7	53.5	50.63	59.75	52.2	33.27	25.61	nd	0.922	0.91	23.7	4.17	bl
12/11/08	9:50	9498.95	45.4%	9.05	2.17	60.0	38.1	36.9	35.9	31.2	29.9	21.3	939	960	945	4	53.5	51.13	63.51	52.8	34.08	25.98	nd	0.911	1.14	23.8	4.55	bl
12/15/08	9:46	9543.55	45.5%	8.98	2.21	56.0	38.8	37.8	36.8	31.7	30.0	21.5	959	980	968	4.4	54.0	51.49	62.84	52.4	34.61	26.24	nd	0.914	1.00	24.4	4.51	bl
12/16/08	9:51	9564.58	45.4%	8.97	2.21	56.0	39.1	38.1	37.1	31.9	30.1	21.3	969	995	980	4.6	54.0	51.52	62.94	52.3	34.44	26.25	nd	0.913	0.95	24.4	4.5	bl
12/17/08	10:15	9588.81	42.5%	7.49	2.02	55.0	37.2	36.8	35.9	31.7	30.0	22.3	878	898	885	3.5	46.0	57.73	59.05	43.7	26.43	20.01	nd	0.907	0.85	18.3	3.88	bl, base line

Quarterly Technical Progress Report
Covering Period January 1, 2009 to March 31, 2009
Date of Report 10-19-09

Agreement Number:	4600007440
Subject:	Prop 50 II Desal 46-7440 P-04 ADC
DWR ID Number:	n/a Department of Water Resources Office of Water Use Efficiency 901 P Street, Third Floor Sacramento, CA 95814
Project Title:	Optimizing Seawater Reverse Osmosis for Affordable Desalination
Recipient Organization:	Affordable Desalination Collaboration 2419 E. Harbor Blvd, #173 Ventura, CA 93001
Partners:	See attached membership list.
Contact Person:	John MacHarg 2419 E. Harbor Blvd, #173 Ventura, CA 93001 Tel: 650-283-7976 Fax: 805-658-8060 e-mail: jmacharg@affordabledesal.com
Date Submitted:	10-19-09

_____
Signed, Reviewed by designated representative

1. **Project Objective:** The objectives of the Affordable Desalination Collaboration (ADC) are to demonstrate affordable, reliable and environmentally responsible reverse osmosis desalination technologies and to provide a platform by which cutting edge technologies can be tested and measured for their ability to reduce the overall cost of the seawater reverse osmosis (SWRO) treatment process.

2. **Project Description / Background:** A key challenge facing the seawater desalination industry today is to develop a new generation of reverse osmosis (RO) plants that deliver high-quality, fresh water at a reduced economic and environmental cost. The key to achieving these goals is to address the most

expensive and environmentally taxing component of operating a desalination system: energy.

The ADC was formed in 2004 to fund and execute the first part of a multiple phase Affordable Desalination Demonstration Project. The ADC members are a group of leading government agencies, municipalities, RO manufacturers, consultants and professionals partnering together to help reduce the costs associated with desalination.

The first phase of the project, ADC I, built and operated a demonstration plant at the United States Navy's Seawater Desalination Test Facility in Pt. Hueneme, California. The plant utilized a combination of proven technologies developed primarily in the U.S. and California to demonstrate that seawater desalination can be optimized to make it technically and economically viable. ADC I achieved remarkable results by desalinating seawater at energy levels between 6.0-6.9 kWh/kgal (1960-2250 kWh/acre-ft). On average, these numbers make the power for desalination comparable to the power required for the State Water and the Colorado River Aqueduct projects and they are approximately 35% lower than experts had been projecting for seawater desalination. For the approximate 100 mgd of proposed seawater desalination projects in Southern California alone, this 35% savings equates to approximately 140,000 Mega Watt hours in energy savings per year.

This second phase (ADC II) will pursue the following demonstration, and development programs.

a. Test and demonstrate additional manufacturers' membranes through a protocol similar to Phase I.
b. Test and demonstrate DOW FILMTEC's next generation "hybrid-membrane".
c. Develop and demonstrate new process designs that are possible as a result of the isobaric energy recovery technologies. We will use the ADC pilot system to test and demonstrate these new flow schemes in order to push the recoveries above 50%, while still maintaining good water quality and low energy performance.
d. Test and demonstrate ZENON ultra-filtration technology ahead of our ADC pilot system. This portion of the test should build on and compliment the other pre-filtration studies that are taking place in the region.
e. Test and demonstrate Ocean Pacific Technology's (OPT) Axial Piston Pressure Exchanger (AP^2X) pump technology.

Below are the additional test items related to our no-cost extension request dated 7-23-08

f. Re-run Toray test due to un-explained step change reduction in performance during first test.

g. Test and demonstrate additional set of DOW-FILMTEC - SW30XHR-400i high boron rejection membranes to demonstrate better water quality and higher Boron rejection than previously tested DOW membranes.
h. Test and demonstrate additional set of high rejection Koch membranes to demonstrate better water quality than previously tested Koch Membranes.
i. Test and demonstrate Amiad's Micro Fiber pre-filtration technology that promises to reduce the cost and foot print compared to current media filter and advanced filtration technologies.
j. Test and demonstrate new X-pump and energy recovery technology that promises significant energy reductions for medium sized SWRO systems and will be simpler to apply and operate compared to traditional pump and isobaric technologies.

Thus far we have completed the five sets of manufacturers' membrane testing that including the Toray TM800C membrane test and retest (Task 2 and 6), the Koch 2822HF-400 membrane test (Task 3) and the Hydranautics SWC5 membrane (Task 4), DOW-FIMTEC Hybrid (Task 5) and the DOW-FILMTEC - SW30XHR-400i high boron rejection membranes (Task 7).

- Start Date of Contract: April 2, 2007
- End Date of Contract: June 30, 2010 (request 7-23-08 extension date)

3. Progress and Status:

During Q1-09 we proceed through a portion of the Unbalanced PX High Recovery testing (Task 9) test protocol. We are continuing to operate and demonstrate the Zenon 1000 system, which is performing very well.

A table comparing the most affordable points of all the membranes tested thus far including 3 sets of FILMTEC (tested in ADC I), Toray, Koch, FILMTEC ISD-Hybid and Hydranautic's is provided below.

Most Affordable Point Performance and Data

Mfgr	Rec %	Flux gfd	RO Process kWh/m3 (kWh/kgal)	TDS Mg/l	Boron mg/l	Total Treatment Costs $/acre-ft (3)	Temp ºF	Feed ktds
FILMTEC (1) SW30HR-380	50	7.5	7.75	129	0.65	978	63	34.69
FILMTEC (1) SW30XLE-400i	49	9.0	6.92	231	1.12	922	57	34.69
FILMTEC (1) SW30HRLE-400i	49	7.5	7.54	148	0.85	968	54	35.29
Koch TFC 2822HF-400	50	8.9	7.32	307	1.4	934	63	34.91
Hydranautics SWC5	49	10.0	7.78	84	0.64	945	56	36.16
FILMTEC ISD-Hybrid	51	9.0	7.56	258	1.0	948	54	36.62
Toray	51	7.5	7.40	158	0.71	958	62	36.41

TM800E-400								
FILMTEC - SW30XHR-400i high boron rejection	51	9.0	8.16	90	0.43	966	60	33.49

Notes: 1. Data from ADC I test where FILMTEC membranes were used exclusively. 2. The testing was performed consecutively through varying water quality conditions and should not be considered as side by side testing. The following results provide an approximate bench mark for SWRO energy consumption for Southern California and reveal general trends in membrane performance.

4. **Percent Complete of Total Project:** ~ 73 %

5. **Deliverables:**

Trade Show/Conference/Publication	Date(s)	Author(s)	Presenter	DWR Submittal
ADC Presentation UCLA Work shop	Feb-2009	n/a	John MacHarg	Q1-09
Water Scarcity UNESCO UC Irvine	Dec-2008	John MacHarg	John MacHarg	Q4-08
ADC Base Lines SWRO System Performance, Water and Desalination Report	September 2008	John MacHarg, Tom Seacord, Bradley Sessions	n/a	Q3-08
Joint ADC-AMTA-SEDA workshop, Annual Conference, Naples, FL	July 2008	ADC-AMTA-SEDA	Various	Q3-08
ADC Completes Profile of SWRO Press Release	March 28, 2008	ADC	n/a	Q1-08
IDA World Conference, Gran Canaria, ADC II Update	October 21-26, 2007	Stephen Dundorf, Thomas F. Seacord, John MacHarg	Stephen Dundorf	Q3-07
Desalination and Water Reuse (DWR) Quarterly, Innovative Designs to be Tested in ADC II	Aug/Sept-07	John P. MacHarg	n/a	Q3-07
AMTA 2007 Annual Conference, Las Vegas, ADC I 10 mgd Application	July 23-27, 2007	Bradley Sessions, Tom Seacord, P.E.	Tom Seacord	Q2-07
AWWA Membrane Technology Conference, Tampa Florida, Collier County results	March 18-21, 2007	Brandon Yallaly, P.E., Tom Seacord, P.E., Steve Messner	Brandon Yallaly	Q2-07

6. **Expenditures:** See next page.

Affordable Desalination Collorboration
State of California Water Board Report
Quarter ending March 31, 2008

	Budgetary Category	Balances December 31, 2008			Q 1 Expenditures			Balances March 31, 2009		
	(I)	Non State Share (II)	State Share (Grant) (III)	Total Project Costs (IV) = (II+III)	Non State Share (II)	State Share (Grant) (III)	Total Project Costs (IV) = (II+III)	Non State Share (II)	State Share (Grant) (III)	Total Project Costs (IV) = (II+III)
(a)	Administration									
	Salaries, wages	$ -	$ 128,113	$ 128,113		$ 34,500	$ 34,500	$ -	$ 93,613	$ 93,613
	Fringe benefits	$ -	$ 47,413	$ 47,413		$ 14,834	$ 14,834	$ -	$ 32,580	$ 32,580
	Supplies	$ -	$ 5,326	$ 5,326		$ 1,479	$ 1,479	$ -	$ 3,847	$ 3,847
	Equipment	$ -	$ 1,000	$ 1,000			$ -	$ -	$ 1,000	$ 1,000
	Consulting services	$ (25,000)	$ 7,000	$ (18,000)		$ 695	$ 695	$ (25,000)	$ 6,305	$ (18,695)
	Travel	$ (3,027)	$ 1,412	$ (1,614)			$ -	$ (3,027)	$ 1,412	$ (1,614)
(b)	Planning/design/engineering	$ (10,500)	$ 2,404	$ (8,096)		$ 163	$ 163	$ (10,500)	$ 2,241	$ (8,259)
(c)	Equipment purchases/Rentals/Rebates/Vouchers	$ 4,250	$ 1,763	$ 6,013			$ -	$ 4,250	$ 1,763	$ 6,013
(d)	Materials/Installation/Implementation	$ 69,000	$ 903	$ 69,903			$ -	$ 69,000	$ 903	$ 69,903
(e)	Implementation verification	$ 7,500	$ 2,500	$ 10,000			$ -	$ 7,500	$ 2,500	$ 10,000
(f)	Project legal/License/Insurance fees	$ -	$ 2,500	$ 2,500			$ -	$ -	$ 2,500	$ 2,500
(g)	Structures	$ -	$ -	$ -			$ -	$ -	$ -	$ -
(h)	Land Purchase/Easement	$ -	$ -	$ -			$ -	$ -	$ -	$ -
(i)	Environmental Compliance/Mitigation/Enhancement	$ -	$ -	$ -			$ -	$ -	$ -	$ -
(j)	Construction	$ -	$ -	$ -			$ -	$ -	$ -	$ -
(k)	Other (Operating Cash)	$ 335,000	$ -	$ 335,000	$ 165,000		$ 165,000	$ 170,000	$ -	$ 170,000
(l)	Operation, monitoring and assessment	$ -	$ 100,960	$ 100,960		$ 30,837	$ 30,837	$ -	$ 70,123	$ 70,123
(m)	Report preparation	$ 2,000	$ 2,500	$ 4,500			$ -	$ 2,000	$ 2,500	$ 4,500
(n)	Outreach and information sharing	$ 32,188	$ -	$ 32,188	$ 18,175		$ 18,175	$ 14,013	$ -	$ 14,013
(o)	Subtotal	$ 411,411	$ 303,794	$ 715,205	$ 183,175	$ 82,507	$ 265,682	$ 228,236	$ 221,287	$ 449,523
(p)	Overhead (8%)	$ -	$ 44,079	$ 44,079		$ 6,601			$ 37,479	$ 37,479
(q)	Contingency (10%)	$ -	$ 18,879	$ 18,879		$ -			$ 18,879	$ 18,879
(r)	Total (o+p+q)	$ 411,411	$ 366,752	$ 778,164	$ 183,175	$ 89,108	$ 265,682	$ 228,236	$ 277,644	$ 505,881

7. **Schedule Status:** Through Q1-09 we have been operating on schedule.

8. **Plans for Next Quarter:** The ADC will continue the Unbalanced High Recovery portion of the project that is investigating high recovery operation above 50% RO recovery.

9. **Attachments:** n/a

All quarterly reports should be publicly disclosable and not contain confidential, proprietary or business sensitive information.

Task and % Complete Progress Table

Agreement Number	Starting Date:	Completion Date:	Quarter-Year	Report Number	PERCENT OF
4600007440	4.2.07	2.4.10	Q1-2009	8	
Grantee Agency Name: Affordable Desalination Collaboration		% Time Elapsed 63%	Total Grant Funds used $ 722,356	Grant funds this Qtr $ 89,108	
Name of Project: Optimizing Seawater Reverse Osmosis for Affordable Desalination					

TASKS	YEAR / MONTH	2008 Qtr 1	2008 Qtr 2	2008 Qtr 3	2008 Qtr 4	2009 Qtr 1	2009 Qtr 2	Project	Task Complete Last Report	Task Complete This Report	Project Complete
Task 1: Zenon 1000 pilot demonstration								12	30	20	7
Task 2: Toray low energy membrane demonstration		Complete						10	0	0	10
Task 3: Koch low energy membrane demonstration		Complete						10	0	0	10
Task 4: Hydranautics low energy membrane demonstration			Complete					10	0	0	10
Task 5: Dow-FILMTEC hybrid membrane demonstration				Complete				10	0	0	10
Task 6: TorayTM800C low energy membrane demonstration (re-test)				Complete				10	0	0	10
Task 7: DOW FILMTEC high Boron rejection memb. demonstration						Complete		10	100		10
Task 8: Koch high rejection memb. demonstration								0	0	0	0
Task 9: Unbalanced PX high recovery testing								15	0	40	6
Task 10: Interstage-PX hybrid high recovery testing								0	0	0	0
Task 11: Demonstrate OPT's APX pump and energy recovery system								5	0	0	0
Task 12: Amiad Fiber Filter Test								8	0	0	0
Show Progress by Use of Bar Chart	**Scheduled =**							100			
	Completed =										73

Notse: 1. Since we have been operating significantly under budget, we have proposed (2/10/08) and received preliminary approval to add tasks 6, 7, 8, 11 and 12 to the task list. These additional items will extend the project schedule from the current December 2008 end date through Feb- 2010. The additional tasks and subsequent extension to the schedule will not result in an increase to the State Share/grant ie. no cost extension.

Schedule

Proposed/Draft Project Schedule

ID	Task Name	Duration	Start	Finish
1	Agreement development	168 days	Tue 8/1/06	Thu 3/22/07
2	Final agreement signed	5 days	Fri 3/23/07	Thu 3/29/07
3	Project begins	1 day	Mon 4/2/07	Mon 4/2/07
4	**TorayTM800C low energy membrane demonstration**	**51 days**	**Mon 4/30/07**	**Mon 7/9/07**
5	Install Toray TM800C Membranes	2 days	Mon 4/30/07	Tue 5/1/07
6	TM800C Ripening period	15 days	Wed 5/2/07	Tue 5/22/07
7	TM800C 9 flux and recovery points	18 days	Wed 5/23/07	Fri 6/15/07
8	TM800C Most affordable point	15 days	Mon 6/18/07	Fri 7/6/07
9	Complete Toray TM800C testing	1 day	Mon 7/9/07	Mon 7/9/07
10	Submit project update report to DWR	5 days	Mon 7/9/07	Fri 7/13/07
11	**Koch low energy membrane demonstration**	**88 days**	**Tue 7/10/07**	**Thu 11/8/07**
12	Install membranes	2 days	Tue 7/10/07	Wed 7/11/07
13	Ripening period	20 days	Thu 7/12/07	Wed 8/8/07
14	9 flux and recovery points	30 days	Thu 8/9/07	Wed 9/19/07
15	Most affordable point	35 days	Thu 9/20/07	Wed 11/7/07
16	Complete Koch testing	1 day	Thu 11/8/07	Thu 11/8/07
17	Submit project update report to DWR	5 days	Mon 9/17/07	Fri 9/21/07
18	Innovative PX flow schemes work shop	2 days	Thu 11/8/07	Fri 11/9/07
19	**Hydranautics low energy membrane demonstration**	**78 days**	**Fri 11/9/07**	**Tue 2/26/08**
20	Install membranes	2 days	Fri 11/9/07	Mon 11/12/07
21	Ripening period	20 days	Tue 11/13/07	Mon 12/10/07
22	9 flux and recovery points	25 days	Tue 12/11/07	Mon 1/14/08
23	Most affordable point	30 days	Tue 1/15/08	Mon 2/25/08
24	Complete Hydranautics testing	1 day	Tue 2/26/08	Tue 2/26/08
25	Submit project update report to DWR	4 days	Mon 1/21/08	Thu 1/24/08
26	**Zenon 1000 Pilot Demonstration**	**281 days**	**Mon 3/3/08**	**Mon 3/30/09**
27	Install and test Zenon System	18 days	Mon 3/3/08	Wed 3/26/08
28	Operate and monitor Zenon 1000 membrane pilot system	262 days	Thu 3/27/08	Fri 3/27/09
29	Complete Zenon testing	1 day	Mon 3/30/09	Mon 3/30/09
30	Submit project update report to DWR	4 days	Mon 3/17/08	Thu 3/20/08
31	**DOW Hybrid Membrane Demonstration**	**49 days**	**Wed 2/27/08**	**Mon 5/5/08**
32	Install DOW hybrid membranes	2 days	Wed 2/27/08	Thu 2/28/08
33	DOW Hybrid Ripening period	15 days	Wed 2/27/08	Tue 3/18/08
34	DOW Hybrid 9 flux and recovery points	18 days	Wed 3/19/08	Fri 4/11/08
35	DOW Hybrid Most affordable point	15 days	Mon 4/14/08	Fri 5/2/08
36	Complete DOW testing	1 day	Mon 5/5/08	Mon 5/5/08
37	Submit project update report to DWR	4 days	Mon 6/16/08	Thu 6/19/08
38	***ToryTM800C low energy membrane demonstration (re-test)***	***51 days***	***Tue 5/6/08***	***Tue 7/15/08***
39	***Install Toray TM800C Membranes***	***2 days***	***Tue 5/6/08***	***Wed 5/7/08***
40	***TM800C Ripening period***	***15 days***	***Thu 5/8/08***	***Wed 5/28/08***
41	***TM800C 12 flux and recovery points***	***18 days***	***Thu 5/29/08***	***Mon 6/23/08***
42	***TM800C Most affordable point***	***15 days***	***Tue 6/24/08***	***Mon 7/14/08***
43	***Complete Toray TM800C testing***	***1 day***	***Tue 7/15/08***	***Tue 7/15/08***

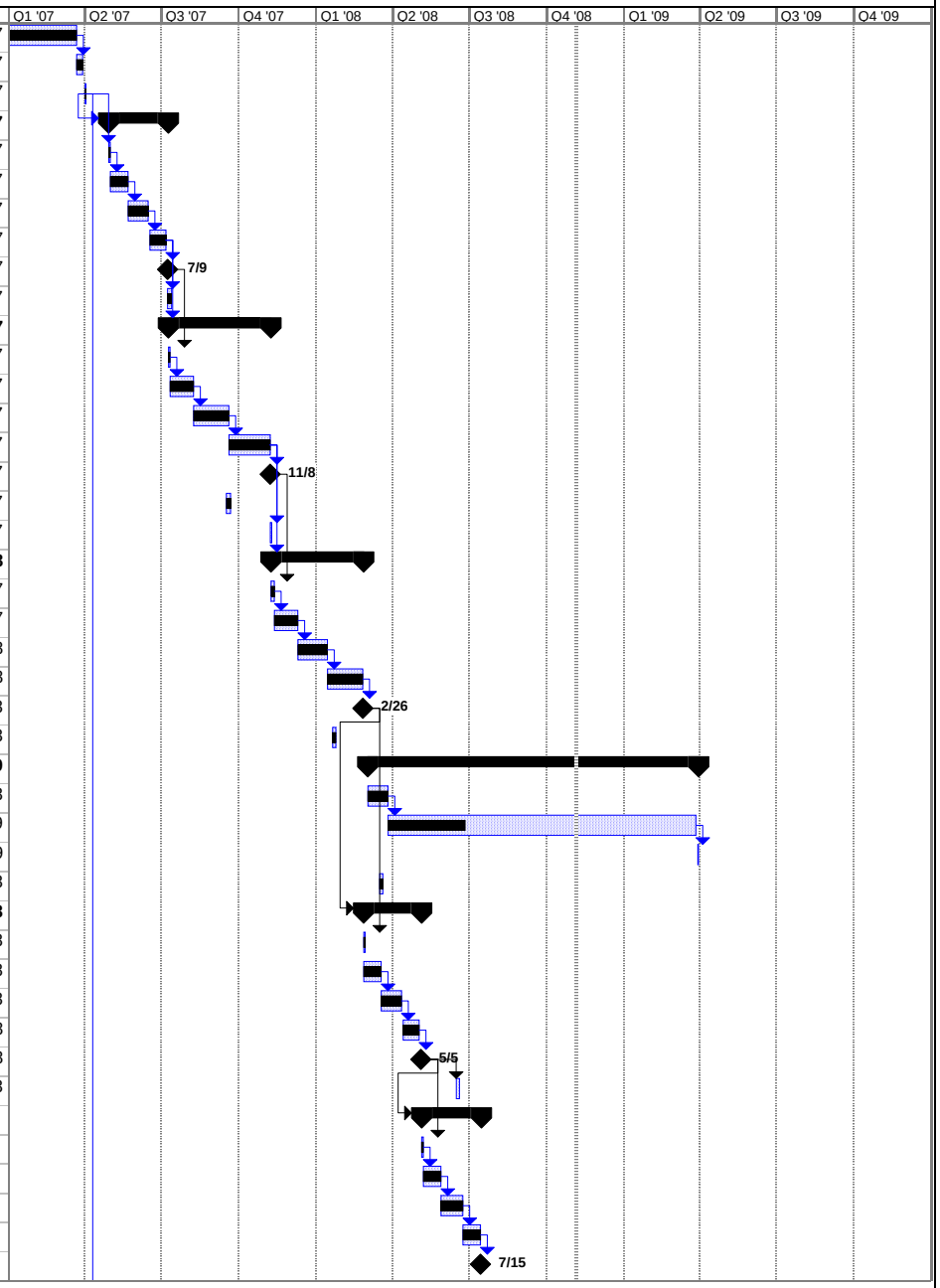

Project: ADC Proposed Project Schedu
Date: Tue 11/4/08

Task		Summary		Rolled Up Progress		Project Summary	
Progress		Rolled Up Task		Split		Group By Summary	
Milestone		Rolled Up Milestone		External Tasks		Deadline	

Proposed/Draft Project Schedule

ID	Task Name	Duration	Start	Finish
44	NFESC shutdown due to intake capacity issues	57 days?	Mon 7/14/08	Tue 9/30/08
45	***DOW FILMTEC high Boron rejection memb. demonstration***	***51 days***	***Wed 10/1/08***	***Wed 12/10/08***
46	***Install DOW FILMTEC SW30XHR-400i Membranes***	***2 days***	***Wed 10/1/08***	***Thu 10/2/08***
47	***DOW FILMTEC SW30XHR-400 Ripening period***	***15 days***	***Fri 10/3/08***	***Thu 10/23/08***
48	***DOW FILMTEC SW30XHR-400 12 flux and recovery points***	***18 days***	***Fri 10/24/08***	***Tue 11/18/08***
49	***DOW FILMTEC SW30XHR-400 Most affordable point***	***15 days***	***Wed 11/19/08***	***Tue 12/9/08***
50	***Complete FILMTEC SW30XHR-400 testing***	***1 day***	***Wed 12/10/08***	***Wed 12/10/08***
51	Submit project update report to DWR	4 days	Fri 8/15/08	Wed 8/20/08
52	ADC-AMTA Member workshop and progress report	1 day	Mon 7/14/08	Mon 7/14/08
53	**Unbalanced PX high recovery testing**	**76 days**	**Thu 12/11/08**	**Thu 3/26/09**
54	Install PX flow scheme membrane set	2 days	Thu 12/11/08	Fri 12/12/08
55	Flush and base line membranes	10 days	Mon 12/15/08	Fri 12/26/08
56	Execute unbalance test protocol @ 9 points	18 days	Mon 12/29/08	Wed 1/21/09
57	PX unbalanced most affordable point (24/7 for 2 months)	45 days	Thu 1/22/09	Wed 3/25/09
58	Clean membranes	2 days	Thu 2/19/09	Fri 2/20/09
59	Complete Unbalanced PX testing	1 day	Thu 3/26/09	Thu 3/26/09
60	Order long lead interstage-PX hybrid items	45 days	Fri 3/27/09	Thu 5/28/09
61	Submit project update report to DWR	4 days	Thu 1/15/09	Tue 1/20/09
62	Submit project update report to DWR	4 days	Mon 3/16/09	Thu 3/19/09
63	***Koch high rejection memb. Demonstration***	***51 days***	***Fri 3/27/09***	***Fri 6/5/09***
64	***Install Koch Membranes***	***2 days***	***Fri 3/27/09***	***Mon 3/30/09***
65	***Koch Ripening period***	***15 days***	***Tue 3/31/09***	***Mon 4/20/09***
66	***Koch 12 flux and recovery points***	***18 days***	***Tue 4/21/09***	***Thu 5/14/09***
67	***Koch Most affordable point***	***15 days***	***Fri 5/15/09***	***Thu 6/4/09***
68	***Complete Koch testing***	***1 day***	***Fri 6/5/09***	***Fri 6/5/09***
69	**Interstage-PX hybrid high recovery testing**	**86 days?**	**Mon 6/8/09**	**Mon 10/5/09**
70	Reconfigure system for Interstage-PX hybrid design	10 days	Mon 6/8/09	Fri 6/19/09
71	Execute interstage-PX hybrid protocol 18 points	30 days	Mon 6/22/09	Fri 7/31/09
72	Interstage-PX hybrid most affordable point (24/7 for 2 months)	45 days	Mon 8/3/09	Fri 10/2/09
73	Clean membranes	2 days	Mon 8/31/09	Tue 9/1/09
74	Complete Interstage-PX Hybrid testing	1 day?	Mon 10/5/09	Mon 10/5/09
75	Submit project update report to DWR	4 days	Mon 6/15/09	Thu 6/18/09
76	***Demonstrate OPT's X-pump and energy recovery system***	***55 days***	***Tue 10/6/09***	***Mon 12/21/09***
77	***Reconfigure system with X-pump and ER unit***	***10 days***	***Tue 10/6/09***	***Mon 10/19/09***
78	***Operate system through 40 hour "break-in" period***	***5 days***	***Tue 10/20/09***	***Mon 10/26/09***
79	***Demonstrate X-pump technology 24/5 for cumulative 500 hrs***	***25 days***	***Tue 10/27/09***	***Mon 11/30/09***
80	***Complete X-pump demonstration***	***15 days***	***Tue 12/1/09***	***Mon 12/21/09***
81	Submit project update report to DWR	4 days	Mon 8/17/09	Thu 8/20/09
82	Complete ADC Prop 50 testing	1 day	Tue 12/22/09	Tue 12/22/09
83	Write final report	30 days	Tue 12/22/09	Mon 2/1/10
84	Submit final report, billing, conclude project	2 days	Tue 2/2/10	Wed 2/3/10
85	Member/general workshop and publish results	2 days	Thu 2/4/10	Fri 2/5/10
86	Project Duration	743 days	Tue 4/3/07	Thu 2/4/10

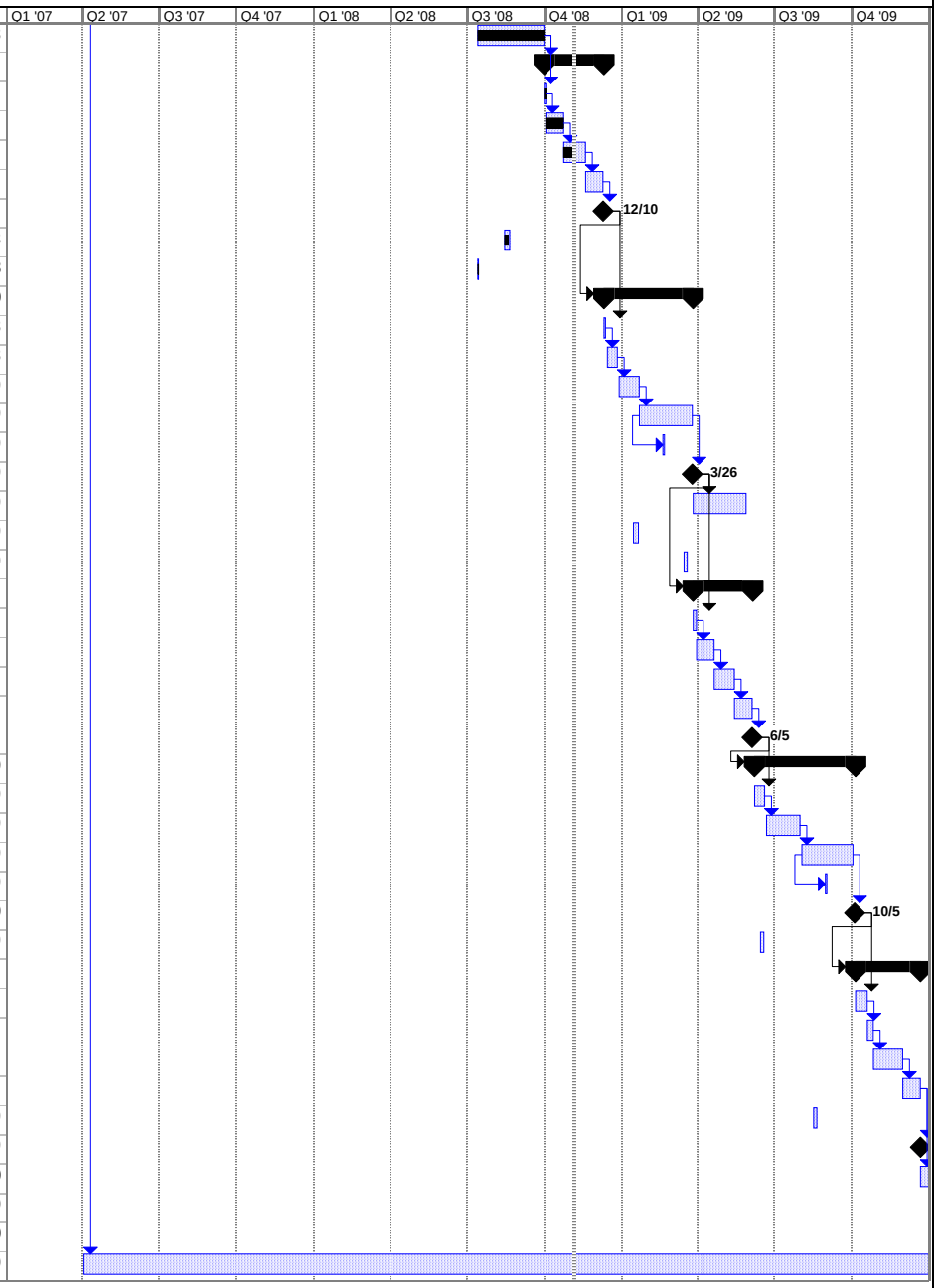

Project: ADC Proposed Project Schedu
Date: Tue 11/4/08

Task		Summary		Rolled Up Progress		Project Summary	
Progress		Rolled Up Task		Split		Group By Summary	
Milestone		Rolled Up Milestone		External Tasks		Deadline	

Attachments

1. Water Quality, Flow and Pressure and Power Data

TIME				CALCULATED PARAMETERS			TEMP	PRESSURES										FLOWS				MAIN PANEL KW METER				VFD KW METER			
		Operation	System	RO	Flux	Power		$P_{MF\text{-}in}$	$P_{MF\text{-}out}$	$P_{CF\text{-}in}$	$P_{CF\text{-}out}$	$P_{PX\text{-}Feed\ In}$	$P_{PX\text{-}conc\ out}$	$P_{PX\text{-}boost\ suct}$	$P_{F\text{-}SYS}$	$P_{C\text{-}SYS}$	$P_{P\text{-}SYS}$	$Q_{F\text{-}HP\ Pump}$	$Q_{PX\ Pump}$	$Q_{Feed\ PX\text{-}In}$	$Q_{P\text{-}SYS}$	A_{sys}	P HP/PX	P booster	Power	PX power	HP Power	Feed Pump	
Date	Time	Time	Recovery %	Recovery %	Gfd	kWh/m3	Influent	(psi)	(psi)	(psi)	(psi)	(psi)	(psi)	(psi)	(psi)	(psi)	(psi)	(gpm)	(gpm)	(gpm)	(gpm)	amp	(kw)	(kw)	Factor	(kw)	(kw)	(kw)	Notes
MM/DD/YY	hh:mm	hh.hh					Temp F	1	2	3	4	5	6	7	8	9	10	11	12	13	14	15	16	17	18	19	20	21	
PX Unbalanced High Recovery Test - Hydranautics SWC5 Membranes											**Membrane Ripening Period**																		
01/30/09	10:04	9895.34	41.7%	43.2%	7.53	1.75	59.0	36.7	35.8	34.9	30.8	29.8	21.4	750	769	760	2.5	45.0	57.64	61.29	43.9	23.77	17.46	nd	0.878	0.95	15.7	3.95	bl
02/02/09	9:30	9966.77	42.7%	43.2%	7.53	1.77	58.0	37.1	36.3	35.5	30.9	29.9	22.1	755	775	761	2.6	46.0	57.72	58.86	43.9	23.83	17.67	nd	0.876	1.12	15.7	3.91	bl
02/03/09	10:25	9991.7	42.6%	43.2%	7.53	1.77	59.0	37.1	36.2	35.3	30.9	29.7	22.1	750	770	760	2.5	46.0	57.75	59.13	43.9	23.77	17.64	nd	0.877	1.08	15.7	3.89	bl
02/04/09	10:15	10015.51	45.0%	45.9%	7.51	1.79	58.0	37.1	36.3	35.8	31.0	29.9	23.0	777	795	785	2.7	46.0	51.65	53.48	43.8	24.42	17.84	nd	0.879	0.75	16.3	3.72	bl
02/05/09	10:20	10039.61	45.3%	45.6%	7.53	1.80	58.0	37.3	36.9	36.0	31.1	29.9	23.6	776	796	783	3.0	46.0	52.41	53.03	43.9	24.31	17.94	nd	0.883	0.88	16.3	3.85	bl
02/06/09	9:41	10062.97	45.1%	45.8%	7.53	1.79	58.0	38.1	37.3	36.7	31.2	30.1	23.8	770	785	779	3.1	46.0	52.04	53.36	43.9	24.08	17.83	nd	0.879	0.89	16.2	3.8	bl
02/09/09	12:06	10077.79	51.1%	45.6%	7.51	1.92	56.0	36.5	35.9	35.2	31.1	30.2	26.1	842	860	852	3.3	46.0	52.33	41.88	43.8	25.49	19.11	nd	0.886	0.74	17.7	3.31	bl
02/10/09	9:49	10099.51	56.3%	45.7%	7.49	2.13	56.0	36.0	35.4	34.9	31.1	30.3	27.6	925	944	939	3.3	46.0	51.82	33.96	43.7	27.86	21.09	nd	0.898	0.94	19.5	3.07	bl
02/11/09	0:43	10119.26	61.0%	45.9%	7.53	2.40	56.0	35.2	34.8	34.5	30.9	30.2	28.1	1041	1060	1057	3.2	46.0	51.77	28.02	43.9	31.27	23.95	nd	0.904	1.08	22.3	2.98	bl
02/23/09	10:16	10207.39	66.4%	45.6%	7.51	2.77	58.0	33.7	33.1	32.8	29.9	29.8	28.1	1210	1225	1220	2.4	46.0	52.22	22.13	43.8	36.11	27.54	nd	0.919	0.84	25.8	2.77	bl
02/20/09	9:55	10183.51	40.7%	40.6%	7.51	1.81	57.0	38.8	37.8	36.9	31.2	30.0	21.5	761	783	778	3.0	46.0	64.07	63.78	43.8	24.19	18.01	nd	0.888	1.10	16.0	4.18	bl
02/24/09	9:53	10231.01	45.6%	40.7%	7.51	1.94	57.0	37.2	36.4	35.7	31.0	30.0	23.8	822	842	835	3.0	46.0	63.86	52.18	43.8	25.36	19.33	nd	0.901	1.12	17.3	3.74	bl
02/25/09	9:50	10254.96	51.0%	40.6%	7.49	2.13	58.0	35.9	35.2	34.7	30.5	29.9	25.8	908	928	920	2.9	46.0	63.91	41.93	43.7	28.09	21.11	nd	0.894	1.13	19.1	3.31	bl
02/26/09	10:21	10279.48	55.9%	40.4%	7.47	2.31	57.0	35.5	34.9	34.4	30.6	30.1	27.1	985	1005	999	3.0	46.0	64.26	34.38	43.6	30.34	22.87	nd	0.903	1.18	20.8	3.08	bl
02/27/09	10:06	10303.22	61.1%	40.5%	7.53	2.54	58.0	34.9	34.3	33.9	30.1	29.9	27.6	1082	1105	1099	2.6	46.0	64.38	27.93	43.9	33.31	25.31	nd	0.908	1.19	22.9	2.95	bl
03/02/09	10:35	10321.6	51.0%	50.9%	7.53	2.04	58.0	36.3	35.7	35.0	30.7	30.0	26.1	917	922	920	2.8	46.0	42.42	42.22	43.9	27.42	20.38	nd	0.890	0.45	19.1	3.35	bl
03/03/09	9:15	10344.27	56.3%	51.1%	7.53	2.19	58.0	35.8	35.1	34.5	30.5	30.0	27.2	980	990	982	2.7	46.0	42.06	34.12	43.9	29.02	21.82	nd	0.895	0.45	20.5	3.1	bl
03/04/09	9:20	10368.34	61.3%	51.0%	7.49	2.38	58.0	35.2	34.8	34.2	30.3	30.1	28.0	1061	1075	1065	2.7	46.0	41.98	27.55	43.7	31.14	23.66	nd	0.901	0.45	22.3	2.95	bl
03/05/09	9:19	10392.33	66.4%	51.0%	7.51	2.66	56.0	35.5	35.1	34.8	30.6	30.0	28.8	1182	1198	1188	2.3	46.0	42.15	22.21	43.8	34.76	26.45	nd	0.906	0.45	25.1	2.85	bl
03/06/09	10:18	10417.31	56.0%	56.1%	7.53	2.23	57.0	36.8	36.3	35.8	30.7	30.1	27.3	1010	1020	1015	2.8	46.0	34.32	34.48	43.9	29.69	22.28	nd	0.899	0.30	21.2	3.25	bl
03/09/09	10:48	10437.3	61.4%	55.8%	7.49	2.45	57.0	36.1	35.7	35.2	30.6	30.1	28.2	1101	1110	1104	3.1	46.0	34.62	27.52	43.7	31.91	24.31	nd	0.902	0.27	23.2	3.04	bl
03/10/09	11:36	10462.11	66.0%	55.9%	7.49	2.68	58.0	36.8	35.3	34.9	30.2	30.0	28.6	1195	1200	1198	2.8	46.0	34.52	22.48	43.7	34.98	26.55	nd	0.911	0.30	25.3	2.93	bl
03/11/09	9:32	10484.05	61.0%	61.4%	7.49	2.61	56.0	36.9	36.3	35.9	30.8	30.2	28.2	1175	1180	1178	3.2	46.0	27.52	27.95	43.7	34.16	25.86	nd	0.908	0.19	24.8	3.09	bl
03/12/09	10:06	10508.62	45.5%	45.5%	7.49	1.95	56.0	39.1	38.2	37.4	31.1	30.1	24.0	858	870	860	2.9	46.0	52.42	52.28	43.7	26.07	19.38	nd	0.883	0.63	18.0	3.91	bl
03/16/09	10:06	10522.06	42.0%	41.9%	8.97	1.98	57.0	41.8	40.2	39.0	31.9	29.9	19.2	838	862	850	4.4	54.0	72.46	72.23	52.3	30.96	23.52	nd	0.902	1.58	20.9	5.27	bl
03/20/09	9:35	10552.21	40.3%	40.2%	8.97	1.97	58.0	42.3	40.9	39.7	31.9	29.9	17.9	817	845	830	4.2	54.0	77.65	77.33	52.3	30.88	23.41	nd	0.904	1.94	20.5	5.47	bl
03/23/09	10:14	10568.3	45.6%	40.4%	8.98	2.09	56.0	40.8	39.6	38.5	31.8	30.0	21.9	878	903	890	4.4	54.0	77.15	62.45	52.4	32.74	24.89	nd	0.910	1.90	21.9	4.75	bl
03/25/09	9:28	10595.17	50.7%	40.4%	8.98	2.27	56.0	39.8	38.8	37.9	31.1	29.9	24.1	950	980	962	4.2	55.0	77.31	50.91	52.4	35.38	27.02	nd	0.917	1.97	24.2	4.35	bl
03/26/09	9:30	10619.2	55.8%	40.4%	8.95	2.49	56.0	39.2	38.4	37.8	30.9	29.9	25.8	1040	1068	1059	4.0	54.0	77.11	41.27	52.2	38.48	29.46	nd	0.921	1.99	26.4	3.85	bl
03/27/09	9:33	10643.25	61.1%	40.4%	9.00	2.70	58.0	39.2	38.7	38.1	30.3	29.9	26.5	1140	1170	1159	3.8	54.5	77.32	33.45	52.5	41.86	32.14	nd	0.924	2.02	29.1	3.73	bl
03/31/09	9:50	10667.95	45.7%	45.7%	7.53	1.92	58.0	40.3	39.5	38.9	31.0	30.0	23.6	838	855	841	2.9	46.0	52.16	52.23	43.9	25.77	19.11	nd	0.886	0.88	17.5	4.18	bl

Water Quality Data

TIME			pH			CONDUCTIVITY						TDS							TURBIDITY		SDI	BORON			OTHER					
			pH			Conductivity (mS/cm)						TDS (mg/L)							Turbidity (NTU)		Density Index	Boron (mg/L)				Inhibitor Pump	HP VFD	PX VFD	FEED VFD	
Date MM/DD/YY	Time hh:mm	Operation Time hh.hh	pH_{F-sys} SC5	pH_{P-sys} SC11	pH_{C-sys} SC6	C_{CF-out} SC3	$C_{F-PX-out}$ SC4	C_{F-sys} SC5	C_{P-sys} SC11	C_{C-sys} SC6	$C_{C-PX-out}$ SC7	TDS_{CF-out} SC3	$TDS_{F-PX-out}$ SC4	PX % Inc	TDS_{F-sys} SC5	TDS_{P-sys} SC11	TDS_{C-sys} SC6	$TDS_{C-PX-out}$ SC7	NTU_{MF-in} CART	NTU_{CF-out} meter	SDI_{CF-out} CART	$B_{-concentrate}$	B_{F-sys} SC5	B_{P-sys} SC11	V_{TANK} (gallons)	Speed (gph)	Speed (Hertz)	Speed (Hertz)	Speed (Hertz)	Notes
PX Unbalanced High Recovery Test - Hydranautics SWC5 Membranes												**Membrane Ripening Period**																		
01/30/09	10:52	9896.15	7.78	6.21	7.62	50.61	52.99	51.84	258.5	83.81	81.72	32.48	34.16	5.2%	33.36	122.60	60.09	58.05	1.989	0.029	2.1			nd	nd	nd	45.09	34.54	55.45	bl
02/02/09	9:55	9967.19	7.82	6.30	7.68	50.15	54.06	51.74	247.2	82.44	81.58	32.22	34.93	8.4%	33.35	117.40	58.84	57.98	1.289	0.035	2.1			nd	nd	nd	45.12	36.37	55.74	bl
02/03/09	10:55	9992.19	7.85	6.28	7.66	50.22	54.05	51.59	249.6	82.93	81.85	32.21	34.96	8.5%	33.25	118.70	59.26	58.29	1.041	0.035	2.2			nd	nd	nd	45.12	35.92	55.45	bl
02/04/09	10:45	10016.02	7.87	6.29	7.68	50.35	54.35	51.78	268.6	86.58	84.61	32.36	35.21	8.8%	33.37	127.90	62.57	60.76	1.032	0.034	2.4			0.83	nd	nd	45.12	32.23	54.75	bl
02/05/09	10:49	10040.48	7.88	6.28	7.68	50.49	55.38	52.11	261.9	85.99	84.89	32.47	36.08	11.1%	33.63	124.70	62.04	61.01	1.797	0.036	2.3			nd	nd	nd	45.15	33.46	54.91	bl
02/06/09	10:12	10063.47	7.85	6.34	7.68	50.02	54.96	51.61	254.9	85.52	84.38	32.16	35.76	11.2%	33.25	121.30	61.63	60.56	3.180	0.034	2.4			0.83	nd	nd	45.17	33.49	55.16	bl
02/09/09	12:34	10078.26	7.83	6.17	7.64	50.18	60.39	53.59	320.9	93.29	92.69	32.27	40.25	24.7%	34.69	153.70	68.69	68.09	2.217	0.029	2			0.88	nd	nd	45.15	30.03	52.94	bl
02/10/09	10:14	10099.91	7.74	5.93	7.52	50.37	70.44	56.95	337.8	100.5	100.4	32.38	48.41	49.5%	37.35	161.90	75.21	75.08	4.930	0.026	1.7			nd	nd	nd	45.17	30.91	51.83	bl
02/11/09	10:34	10119.78	7.72	5.77	7.45	50.45	80.95	61.15	372.4	109.2	109.1	32.44	57.59	77.5%	40.81	178.70	83.11	82.99	2.949	0.024	1.8	9.8	5.4	0.96	nd	nd	45.72	31.35	51.22	bl
02/23/09	10:40	10207.79	7.59	5.79	7.34	49.93	93.08	65.19	513.4	119.2	119.4	32.05	68.46	113.6%	44.09	247.80	92.07	92.18	2.841	0.032	2.8	10.0	5.8	1.10	nd	nd	45.91	31.23	50.25	bl
02/20/09	10:24	10183.99	7.71	6.11	7.56	49.81	52.08	50.81	270.3	80.75	79.17	31.94	33.56	5.1%	32.67	128.50	57.27	55.81	5.005	0.030	2.2	7.1	4.5	0.79	nd	nd	45.03	36.15	56.58	bl
02/24/09	10:22	10231.49	7.71	6.04	7.53	50.21	57.79	53.42	287.5	85.16	84.92	32.27	38.05	17.9%	34.52	137.10	61.33	61.04	3.142	0.029	2.6	7.5	4.6	0.83	nd	nd	45.15	36.42	55.24	bl
02/25/09	10:19	10255.44	7.82	5.99	7.46	50.39	67.06	56.78	329.1	93.49	93.29	32.38	45.65	41.0%	37.19	157.50	68.84	68.62	6.570	0.030	2.8	8.3	4.7	0.92	nd	nd	45.14	36.16	52.78	bl
02/26/09	10:54	10280.03	7.67	5.91	7.47	50.41	76.69	60.13	376.8	100.8	100.6	32.41	53.69	65.7%	39.97	180.90	75.44	75.26	3.664	0.031	2.6	8.9	5.3	1.00	nd	nd	45.12	36.86	51.72	bl
02/27/09	10:35	10303.71	7.65	5.82	7.43	50.39	86.21	64.65	425.2	109.1	108.9	32.41	62.24	92.0%	43.66	204.50	82.94	82.67	3.406	0.030	2.5	9.6	5.4	1.10	nd	nd	45.64	36.88	51.12	bl
03/02/09	11:09	10322.16	7.63	5.88	7.43	50.37	57.62	52.87	349.4	96.26	93.19	32.39	37.93	17.1%	34.16	167.40	71.31	68.52	2.124	0.030	2.4	8.5	4.6	0.91	nd	nd	45.41	26.31	53.22	bl, PX mixing issues
03/03/09	9:55	10394.94	7.64	5.87	7.41	50.43	65.47	55.27	388.1	102.4	101.3	32.39	44.38	37.0%	36.01	186.40	76.92	75.89	2.401	0.029	2.4	9.2	5.2	0.97	nd	nd	45.41	26.31	51.98	bl
03/04/09	9:58	10368.98	7.63	5.81	7.36	50.19	75.26	58.67	441.5	109.9	109.7	32.25	52.41	62.5%	38.76	212.50	83.79	83.41	3.244	0.030	2.7	10.0	5.2	1.10	nd	nd	45.39	26.31	51.25	bl
03/05/09	9:50	10392.84	7.65	5.76	7.34	50.17	86.36	63.39	490.4	118.5	118.3	32.24	62.44	93.7%	42.65	236.80	91.55	91.21	2.775	0.039	2.7	11.0	5.5	1.10	nd	nd	45.67	26.25	50.99	bl
03/06/09	11:31	10418.53	7.57	5.84	7.37	50.42	60.39	53.54	371.6	105.5	100.4	32.41	40.19	24.0%	34.64	178.30	79.78		3.497	0.038	2.7	9.6	4.8	0.97	nd	nd	45.46	22.41	52.72	bl, PX mixing issues
03/09/09	11:13	10437.73	7.64	5.83	7.36	49.34	68.01	55.08	459.3	110.7	107.8	31.67	46.54	47.0%	35.85	221.50	84.41	81.76	3.818	0.031	3.1			nd	nd	nd	45.47	21.94	52.29	bl
03/10/09	12:25	10462.93	7.67	5.74	7.37	49.23	76.63	58.75	485.7	115.5	114.5	31.57	53.74	70.2%	38.87	234.50	88.82	87.79	3.402	0.032	3.3			nd	nd	nd	45.88	22.68	51.62	bl
03/11/09	10:11	10484.69	7.66	5.71	7.31	49.31	64.15	53.89	452.9	116.2	106.3	31.64	43.29	36.8%	34.91	218.30	89.39	80.44	2.361	0.032	3.1			nd	nd	nd	45.91	18.72	52.14	bl, PX mixing issues
03/12/09	10:33	10509.08	7.69	5.99	7.52	49.29	52.57	50.39	270.8	86.05	83.11	31.61	33.98	7.5%	32.43	129.00	62.13	59.38	2.562	0.031	3.6			nd	nd	nd	45.35	30.09	55.81	bl
03/16/09	8:09	10522.54	7.78	5.98	7.62	49.26	51.56	50.03	242.1	81.07	79.62	31.60	33.25	5.2%	32.16	114.90	57.58	56.23	1.145	0.031	3.9	7.4	4.5	0.74	nd	nd	53.82	40.66	60.21	bl
03/20/09	10:05	10552.70	7.73	6.07	7.66	49.34	51.63	50.13	241.5	79.03	78.03	31.66	33.32	5.2%	32.25	114.70	55.78	54.81	2.783	0.031	3.4	7.1	4.6	0.73	nd	nd	53.82	43.59	61.23	bl
03/23/09	10:19	10568.79	7.61	5.74	7.45	49.38	58.31	52.96	260.7	85.14	84.76	31.68	38.51	21.6%	34.21	124.10	61.28	60.91	2.783	0.031	3.1	8.4	4.7	0.77	nd	nd	53.82	43.24	58.45	bl
03/25/09	9:57	10595.56	7.56	5.71	7.43	49.28	65.34	56.03	279.1	90.92	90.79	31.63	44.19	39.7%	36.59	133.10	66.52	66.34	1.703	0.031	2.9	9.3	5.1	0.82	nd	nd	54.25	43.65	57.45	bl
03/26/09	9:58	10619.67	7.61	5.67	7.42	49.37	75.15	59.56	326.6	99.12	98.88	31.69	52.32	65.1%	39.51	156.20	73.89	73.66	3.212	0.034	2.8	10.0	5.6	0.90	nd	nd	54.38	43.83	55.73	bl
03/27/09	10:01	10643.72	7.74	5.77	7.48	49.23	84.74	62.49	385.4	107.3	107.1	31.58	60.89	92.8%	41.87	184.80	81.32	81.02	1.445	0.031	2.6	8.0	5.9	1.00	nd	nd	54.69	44.03	55.32	bl
03/31/09	10:22	10668.48	7.73	6.02	7.54	49.21	52.81	50.32	319.1	85.82	83.16	31.55	34.11	8.1%	32.37	152.60	61.89	59.44	1.012	0.032	3.5	7.8	4.7	0.90	nd	nd	45.47	30.62	57.09	bl

Quarterly Technical Progress Report
Covering Period April 1, 2009 to June 30, 2009
Date of Report 3-5-10

Agreement Number:	4600007440
Subject:	Prop 50 II Desal 46-7440 P-04 ADC
DWR ID Number:	n/a Department of Water Resources Office of Water Use Efficiency 901 P Street, Third Floor Sacramento, CA 95814
Project Title:	Optimizing Seawater Reverse Osmosis for Affordable Desalination
Recipient Organization:	Affordable Desalination Collaboration 2419 E. Harbor Blvd, #173 Ventura, CA 93001
Partners:	See attached membership list.
Contact Person:	John MacHarg 2419 E. Harbor Blvd, #173 Ventura, CA 93001 Tel: 650-283-7976 Fax: 805-658-8060 e-mail: jmacharg@affordabledesal.com
Date Submitted:	3-5-10

_____
Signed, Reviewed by designated representative

1. **Project Objective:** The objectives of the Affordable Desalination Collaboration (ADC) are to demonstrate affordable, reliable and environmentally responsible reverse osmosis desalination technologies and to provide a platform by which cutting edge technologies can be tested and measured for their ability to reduce the overall cost of the seawater reverse osmosis (SWRO) treatment process.

2. **Project Description / Background:** A key challenge facing the seawater desalination industry today is to develop a new generation of reverse osmosis (RO) plants that deliver high-quality, fresh water at a reduced economic and environmental cost. The key to achieving these goals is to address the most

expensive and environmentally taxing component of operating a desalination system: energy.

The ADC was formed in 2004 to fund and execute the first part of a multiple phase Affordable Desalination Demonstration Project. The ADC members are a group of leading government agencies, municipalities, RO manufacturers, consultants and professionals partnering together to help reduce the costs associated with desalination.

The first phase of the project, ADC I, built and operated a demonstration plant at the United States Navy's Seawater Desalination Test Facility in Pt. Hueneme, California. The plant utilized a combination of proven technologies developed primarily in the U.S. and California to demonstrate that seawater desalination can be optimized to make it technically and economically viable. ADC I achieved remarkable results by desalinating seawater at energy levels between 6.0-6.9 kWh/kgal (1960-2250 kWh/acre-ft). On average, these numbers make the power for desalination comparable to the power required for the State Water and the Colorado River Aqueduct projects and they are approximately 35% lower than experts had been projecting for seawater desalination. For the approximate 100 mgd of proposed seawater desalination projects in Southern California alone, this 35% savings equates to approximately 140,000 Mega Watt hours in energy savings per year.

This second phase (ADC II) will pursue the following demonstration, and development programs.

a. Test and demonstrate additional manufacturers' membranes through a protocol similar to Phase I.
b. Test and demonstrate DOW FILMTEC's next generation "hybrid-membrane".
c. Develop and demonstrate new process designs that are possible as a result of the isobaric energy recovery technologies. We will use the ADC pilot system to test and demonstrate these new flow schemes in order to push the recoveries above 50%, while still maintaining good water quality and low energy performance.
d. Test and demonstrate ZENON ultra-filtration technology ahead of our ADC pilot system. This portion of the test should build on and compliment the other pre-filtration studies that are taking place in the region.
e. Test and demonstrate Ocean Pacific Technology's (OPT) Axial Piston Pressure Exchanger (AP^2X) pump technology.

Below are the additional test items related to our no-cost extension request dated 7-23-08

f. Re-run Toray test due to un-explained step change reduction in performance during first test.

g. Test and demonstrate additional set of DOW-FILMTEC - SW30XHR-400i high boron rejection membranes to demonstrate better water quality and higher Boron rejection than previously tested DOW membranes.
h. Test and demonstrate additional set of high rejection Koch membranes to demonstrate better water quality than previously tested Koch Membranes.
i. Test and demonstrate Amiad's Micro Fiber pre-filtration technology that promises to reduce the cost and foot print compared to current media filter and advanced filtration technologies.
j. Test and demonstrate new X-pump and energy recovery technology that promises significant energy reductions for medium sized SWRO systems and will be simpler to apply and operate compared to traditional pump and isobaric technologies.

Thus far we have completed the five sets of manufacturers' membrane testing that including the Toray TM800C membrane test and retest (Task 2 and 6), the Koch 2822HF-400 membrane test (Task 3) and the Hydranautics SWC5 membrane (Task 4), DOW-FIMTEC Hybrid (Task 5) and the DOW-FILMTEC - SW30XHR-400i high boron rejection membranes (Task 7).

- Start Date of Contract: April 2, 2007
- End Date of Contract: June 30, 2010 (request 7-23-08 extension date)

3. Progress and Status:

During Q2-09 we proceed through a portion of the Unbalanced PX High Recovery testing (Task 9) test protocol. We are continuing to operate and demonstrate the Zenon 1000 system, which is performing very well. We started the Amiad Fiber Filter Demonstration (Task 12) in Q2-09. Performance of the Amiad system has been promising with SDI's averaging 4.8, but at times rising above the typical membrane requirement of 5.0.

A table comparing the most affordable points of all the membranes tested thus far including is provided below.

Most Affordable Point Performance and Data

Mfgr	Rec %	Flux gfd	RO Process kWh/m3 (kWh/kgal)	TDS Mg/l	Boron mg/l	Total Treatment Costs $/acre-ft (3)	Temp ºF	Feed ktds
FILMTEC (1) SW30HR-380	50	7.5	7.75	129	0.65	978	63	34.69
FILMTEC (1) SW30XLE-400i	49	9.0	6.92	231	1.12	922	57	34.69
FILMTEC (1) SW30HRLE-400i	49	7.5	7.54	148	0.85	968	54	35.29
Koch TFC 2822HF-400	50	8.9	7.32	307	1.4	934	63	34.91
Hydranautics SWC5	49	10.0	7.78	84	0.64	945	56	36.16
FILMTEC	51	9.0	7.56	258	1.0	948	54	36.62

ISD-Hybrid								
Toray TM800E-400	51	7.5	7.40	158	0.71	958	62	36.41
FILMTEC - SW30XHR-400i high boron rejection	51	9.0	8.16	90	0.43	966	60	33.49

Notes: 1. Data from ADC I test where FILMTEC membranes were used exclusively. 2. The testing was performed consecutively through varying water quality conditions and should not be considered as side by side testing. The following results provide an approximate bench mark for SWRO energy consumption for Southern California and reveal general trends in membrane performance.

4. **Percent Complete of Total Project:** ~ 76 %

5. **Deliverables:**

Trade Show/Conference/Publication	Date(s)	Author(s)	Presenter	DWR Submittal
ADC Presentation at CA-NV-AWWA Desal Workshop	June-2009	John MacHarg	John Macharg	Q2-09
ADC Presentation UCLA Work shop	Feb-2009	n/a	John MacHarg	Q1-09
Water Scarcity UNESCO UC Irvine	Dec-2008	John MacHarg	John MacHarg	Q4-08
ADC Base Lines SWRO System Performance, Water and Desalination Report	September 2008	John MacHarg, Tom Seacord, Bradley Sessions	n/a	Q3-08
Joint ADC-AMTA-SEDA workshop, Annual Conference, Naples, FL	July 2008	ADC-AMTA-SEDA	Various	Q3-08
ADC Completes Profile of SWRO Press Release	March 28, 2008	ADC	n/a	Q1-08
IDA World Conference, Gran Canaria, ADC II Update	October 21-26, 2007	Stephen Dundorf, Thomas F. Seacord, John MacHarg	Stephen Dundorf	Q3-07
Desalination and Water Reuse (DWR) Quarterly, Innovative Designs to be Tested in ADC II	Aug/Sept-07	John P. MacHarg	n/a	Q3-07
AMTA 2007 Annual Conference, Las Vegas, ADC I 10 mgd Application	July 23-27, 2007	Bradley Sessions, Tom Seacord, P.E.	Tom Seacord	Q2-07
AWWA Membrane Technology Conference, Tampa Florida, Collier County results	March 18-21, 2007	Brandon Yallaly, P.E., Tom Seacord, P.E., Steve Messner	Brandon Yallaly	Q2-07

6. **Expenditures:** See next page.

Affordable Desalination Collorboration
State of California Water Board Report
Quarter ending June 30, 2009

	Budgetary Category	Balances March 31, 2009			Q 2 Expenditures			Balances June 30, 2009		
		Non State Share	State Share (Grant)	Total Project Costs	Non State Share	State Share (Grant)	Total Project Costs	Non State Share	State Share (Grant)	Total Project Costs
	(I)	(II)	(III)	(IV) = (II+III)	(II)	(III)	(IV) = (II+III)	(II)	(III)	(IV) = (II+III)
(a)	Administration									
	Salaries, wages	$ -	$ 93,613	$ 32,613		$ 34,500	$ 34,500	$ -	$ 59,113	$ 59,113
	Fringe benefits	$ -	$ 32,580	$ (10,885)		$ 14,214	$ 14,214	$ -	$ 18,366	$ 18,366
	Supplies	$ -	$ 3,847	$ 36,826		$ 1,813	$ 1,813	$ -	$ 2,034	$ 2,034
	Equipment	$ -	$ 1,000	$ 6,000			$ -	$ -	$ 1,000	$ 1,000
	Consulting services	$ (25,000)	$ 6,305	$ 22,000			$ -	$ (25,000)	$ 6,305	$ (18,695)
	Travel	$ (3,027)	$ 1,412	$ 8,999			$ -	$ (3,027)	$ 1,412	$ (1,614)
(b)	Planning/design/engineering	$ (10,500)	$ 2,241	$ 3,904		$ 333	$ 333	$ (10,500)	$ 1,909	$ (8,591)
(c)	Equipment purchases/Rentals/Rebates/Vouchers	$ 4,250	$ 1,763	$ 17,013			$ -	$ 4,250	$ 1,763	$ 6,013
(d)	Materials/Installation/Implementation	$ 69,000	$ 903	$ 80,903			$ -	$ 69,000	$ 903	$ 69,903
(e)	Implementation verification	$ 7,500	$ 2,500	$ 15,500			$ -	$ 7,500	$ 2,500	$ 10,000
(f)	Project legal/License/Insurance fees	$ -	$ 2,500	$ 45,000			$ -	$ -	$ 2,500	$ 2,500
(g)	Structures	$ -	$ -	$ -			$ -	$ -	$ -	$ -
(h)	Land Purchase/Easement	$ -	$ -	$ -			$ -	$ -	$ -	$ -
(i)	Environmental Compliance/Mitigation/Enhancement	$ -	$ -	$ -			$ -	$ -	$ -	$ -
(j)	Construction	$ -	$ -	$ -			$ -	$ -	$ -	$ -
(k)	Other (Operating Cash)	$ 170,000	$ -	$ 335,000	$ 170,000		$ 170,000	$ -	$ -	$ -
(l)	Operation, monitoring and assessment	$ -	$ 70,123	$ 88,751		$ 31,633	$ 31,633	$ -	$ 38,490	$ 38,490
(m)	Report preparation	$ 2,000	$ 2,500	$ 4,500			$ -	$ 2,000	$ 2,500	$ 4,500
(n)	Outreach and information sharing	$ 14,013	$ -	$ 32,188	$ 10,000		$ 10,000	$ 4,013	$ -	$ 4,013
(o)	Subtotal	$ 228,236	$ 221,287	$ 718,312	$ 180,000	$ 82,493	$ 262,493	$ 48,236	$ 138,794	$ 187,030
(p)	Overhead (8%)	$ -	$ 44,079	$ 120,848		$ 6,599			$ 37,480	$ 37,480
(q)	Contingency (10%)	$ -	$ 18,879	$ 30,379		$ -			$ 18,879	$ 18,879
(r)	Total (o+p+q)	$ 228,236	$ 284,245	$ 869,539	$ 180,000	$ 89,093	$ 262,493	$ 48,236	$ 195,152	$ 243,389

7. **Schedule Status:** Through Q1-09 we have been operating on schedule.

8. **Plans for Next Quarter:** The ADC will finish the Unbalanced High Recovery portion of the project and continue to test and demonstrate the Zenon and Amiad pre-filtration systems.

9. **Attachments:** n/a

All quarterly reports should be publicly disclosable and not contain confidential, proprietary or business sensitive information.

Task and % Complete Progress Table

Agreement Number	Starting Date:	Completion Date:	Quarter-Year	Report Number	PERCENT OF
4600007440	4.2.07	2.4.10	Q2-2009	9	
Grantee Agency Name: Affordable Desalination Collaboration		% Time Elapsed 71%	Total Grant Funds used $ 804,848	Grant funds this Qtr $ 89,093	
Name of Project: Optimizing Seawater Reverse Osmosis for Affordable Desalination					

TASKS	YEAR / MONTH	2008 Qtr 3	2008 Qtr 4	2009 Qtr 1	2009 Qtr 2	2009 Qtr 3	2009 Qtr 4	Project	Task Complete Last Report	Task Complete This Report	Project Complete
Task 1: Zenon 1000 pilot demonstration								12	30	20	7
Task 2: Toray low energy membrane demonstration		Complete						10	0	0	10
Task 3: Koch low energy membrane demonstration		Complete						10	0	0	10
Task 4: Hydranautics low energy membrane demonstration		Complete						10	0	0	10
Task 5: Dow-FILMTEC hybrid membrane demonstration		Complete						10	0	0	10
Task 6: TorayTM800C low energy membrane demonstration (re-test)		Complete						10	0	0	10
Task 7: DOW FILMTEC high Boron rejection memb. demonstration				Complete				10	100		10
Task 8: Koch high rejection memb. demonstration		Canceled						0	0	0	0
Task 9: Unbalanced PX high recovery testing								15	40	20	9
Task 10: Interstage-PX hybrid high recovery testing								0	0	0	0
Task 11: Demonstrate OPT's APX pump and energy recovery system								5	0	0	0
Task 12: Amiad Fiber Filter Test								8	0	0	0
Show Progress by Use of Bar Chart	**Scheduled =**							100			76
	Completed =										

Notes: 1. Since we have been operating significantly under budget, we have received approval to add tasks 6, 7, 8, 11 and 12 to the task list. These additional items will extend the project schedule from the current December 2008 end date through Feb- 2010. The additional tasks and subsequent extension to the schedule will not result in an increase to the State Share/grant ie. no cost extension.

Schedule

Proposed/Draft Project Schedule

ID	Task Name	Duration	Start	Finish
1	Agreement development	168 days	Tue 8/1/06	Thu 3/22/07
2	Final agreement signed	5 days	Fri 3/23/07	Thu 3/29/07
3	Project begins	1 day	Mon 4/2/07	Mon 4/2/07
4	**TorayTM800C low energy membrane demonstration**	**51 days**	**Mon 4/30/07**	**Mon 7/9/07**
5	Install Toray TM800C Membranes	2 days	Mon 4/30/07	Tue 5/1/07
6	TM800C Ripening period	15 days	Wed 5/2/07	Tue 5/22/07
7	TM800C 9 flux and recovery points	18 days	Wed 5/23/07	Fri 6/15/07
8	TM800C Most affordable point	15 days	Mon 6/18/07	Fri 7/6/07
9	Complete Toray TM800C testing	1 day	Mon 7/9/07	Mon 7/9/07
10	Submit project update report to DWR	5 days	Mon 7/9/07	Fri 7/13/07
11	**Koch low energy membrane demonstration**	**88 days**	**Tue 7/10/07**	**Thu 11/8/07**
12	Install membranes	2 days	Tue 7/10/07	Wed 7/11/07
13	Ripening period	20 days	Thu 7/12/07	Wed 8/8/07
14	9 flux and recovery points	30 days	Thu 8/9/07	Wed 9/19/07
15	Most affordable point	35 days	Thu 9/20/07	Wed 11/7/07
16	Complete Koch testing	1 day	Thu 11/8/07	Thu 11/8/07
17	Submit project update report to DWR	5 days	Mon 9/17/07	Fri 9/21/07
18	Innovative PX flow schemes work shop	2 days	Thu 11/8/07	Fri 11/9/07
19	**Hydranautics low energy membrane demonstration**	**78 days**	**Fri 11/9/07**	**Tue 2/26/08**
20	Install membranes	2 days	Fri 11/9/07	Mon 11/12/07
21	Ripening period	20 days	Tue 11/13/07	Mon 12/10/07
22	9 flux and recovery points	25 days	Tue 12/11/07	Mon 1/14/08
23	Most affordable point	30 days	Tue 1/15/08	Mon 2/25/08
24	Complete Hydranautics testing	1 day	Tue 2/26/08	Tue 2/26/08
25	Submit project update report to DWR	4 days	Mon 1/21/08	Thu 1/24/08
26	**Zenon 1000 Pilot Demonstration**	**473 days**	**Mon 3/3/08**	**Wed 12/23/09**
27	Install and test Zenon System	18 days	Mon 3/3/08	Wed 3/26/08
28	Operate and monitor Zenon 1000 membrane pilot system	454 days	Thu 3/27/08	Tue 12/22/09
29	Complete Zenon testing	1 day	Wed 12/23/09	Wed 12/23/09
30	Submit project update report to DWR	4 days	Mon 3/17/08	Thu 3/20/08
31	**DOW Hybrid Membrane Demonstration**	**49 days**	**Wed 2/27/08**	**Mon 5/5/08**
32	Install DOW hybrid membranes	2 days	Wed 2/27/08	Thu 2/28/08
33	DOW Hybrid Ripening period	15 days	Wed 2/27/08	Tue 3/18/08
34	DOW Hybrid 9 flux and recovery points	18 days	Wed 3/19/08	Fri 4/11/08
35	DOW Hybrid Most affordable point	15 days	Mon 4/14/08	Fri 5/2/08
36	Complete DOW testing	1 day	Mon 5/5/08	Mon 5/5/08
37	Submit project update report to DWR	4 days	Mon 6/16/08	Thu 6/19/08
38	***TorayTM800C low energy membrane demonstration (re-test)***	***51 days***	***Tue 5/6/08***	***Tue 7/15/08***
39	***Install Toray TM800C Membranes***	***2 days***	***Tue 5/6/08***	***Wed 5/7/08***
40	***TM800C Ripening period***	***15 days***	***Thu 5/8/08***	***Wed 5/28/08***
41	***TM800C 12 flux and recovery points***	***18 days***	***Thu 5/29/08***	***Mon 6/23/08***
42	***TM800C Most affordable point***	***15 days***	***Tue 6/24/08***	***Mon 7/14/08***
43	***Complete Toray TM800C testing***	***1 day***	***Tue 7/15/08***	***Tue 7/15/08***

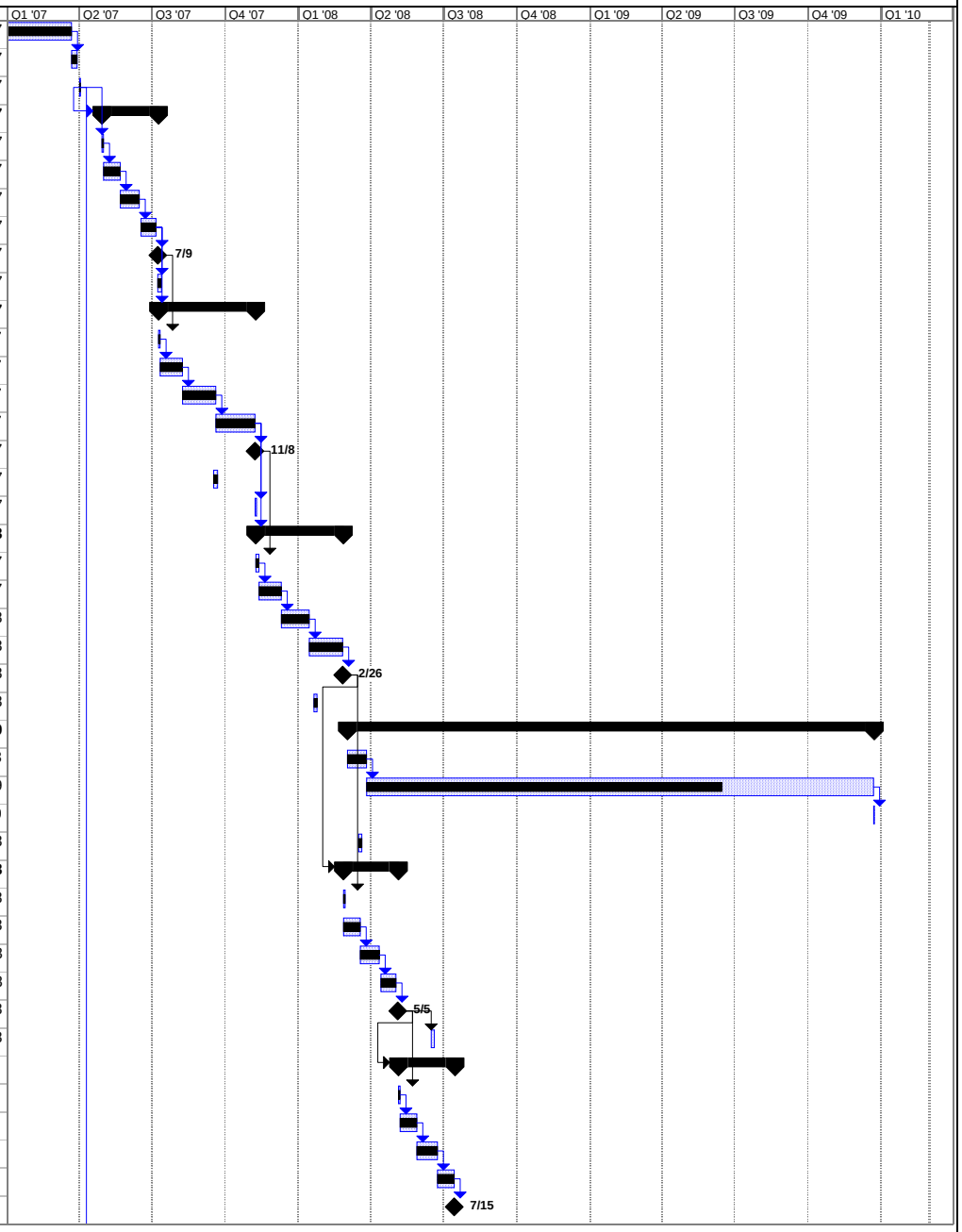

Project: ADC Proposed Project Schedu
Date: Tue 3/2/10

Task		Summary		Rolled Up Progress		Project Summary	
Progress		Rolled Up Task		Split		Group By Summary	
Milestone		Rolled Up Milestone		External Tasks		Deadline	

Proposed/Draft Project Schedule

ID	Task Name	Duration	Start	Finish
44	NFESC shutdown due to intake capacity issues	57 days?	Mon 7/14/08	Tue 9/30/08
45	***DOW FILMTEC high Boron rejection memb. demonstration***	***65 days***	***Wed 10/1/08***	***Tue 12/30/08***
46	***Install DOW FILMTEC SW30XHR-400i Membranes***	***2 days***	***Wed 10/1/08***	***Thu 10/2/08***
47	***DOW FILMTEC SW30XHR-400 Ripening period***	***15 days***	***Fri 10/3/08***	***Thu 10/23/08***
48	***DOW FILMTEC SW30XHR-400 12 flux and recovery points***	***30 days***	***Fri 10/24/08***	***Thu 12/4/08***
49	***DOW FILMTEC SW30XHR-400 Most affordable point***	***30 days***	***Wed 11/19/08***	***Tue 12/30/08***
50	***Complete FILMTEC SW30XHR-400 testing***	***1 day***	***Wed 12/10/08***	***Wed 12/10/08***
51	Submit project update report to DWR	4 days	Fri 8/15/08	Wed 8/20/08
52	ADC-AMTA Member workshop and progress report	1 day	Mon 7/14/08	Mon 7/14/08
53	**Unbalanced PX high recovery testing**	**122 days**	**Sat 1/10/09**	**Tue 6/30/09**
54	Install PX flow scheme membrane set	2 days	Sat 1/10/09	Tue 1/13/09
55	Flush and base line membranes	10 days	Wed 1/14/09	Tue 1/27/09
56	Execute unbalance test protocol @ 18 points (mixing issues)	51 days	Fri 2/13/09	Fri 4/24/09
57	Execute unbalance test protocol @ 11 points (second set)	22 days	Wed 4/29/09	Thu 5/28/09
58	PX unbalanced most affordable point (24/7 for 1 months)	22 days	Fri 5/29/09	Mon 6/29/09
59	Complete Unbalanced PX testing	1 day	Tue 6/30/09	Tue 6/30/09
60	Order long lead interstage-PX hybrid items	45 days	Wed 7/1/09	Tue 9/1/09
61	Submit project update report to DWR	4 days	Thu 1/15/09	Tue 1/20/09
62	Submit project update report to DWR	4 days	Mon 3/16/09	Thu 3/19/09
63	***Koch high rejection memb. Demonstration***	***51 days***	***Wed 7/1/09***	***Wed 9/9/09***
64	***Install Koch Membranes***	***2 days***	***Wed 7/1/09***	***Thu 7/2/09***
65	***Koch Ripening period***	***15 days***	***Fri 7/3/09***	***Thu 7/23/09***
66	***Koch 12 flux and recovery points***	***18 days***	***Fri 7/24/09***	***Tue 8/18/09***
67	***Koch Most affordable point***	***15 days***	***Wed 8/19/09***	***Tue 9/8/09***
68	***Complete Koch testing***	***1 day***	***Wed 9/9/09***	***Wed 9/9/09***
69	**Interstage-PX hybrid high recovery testing**	**86 days?**	**Thu 9/10/09**	**Thu 1/7/10**
70	Reconfigure system for Interstage-PX hybrid design	10 days	Thu 9/10/09	Wed 9/23/09
71	Execute interstage-PX hybrid protocol 18 points	30 days	Thu 9/24/09	Wed 11/4/09
72	Interstage-PX hybrid most affordable point (24/7 for 2 months)	45 days	Thu 11/5/09	Wed 1/6/10
73	Clean membranes	2 days	Thu 12/3/09	Fri 12/4/09
74	Complete Interstage-PX Hybrid testing	1 day?	Thu 1/7/10	Thu 1/7/10
75	Submit project update report to DWR	4 days	Mon 6/15/09	Thu 6/18/09
76	***Demonstrate OPT's X-pump and energy recovery system***	***55 days***	***Fri 1/8/10***	***Thu 3/25/10***
77	***Reconfigure system with X-pump and ER unit***	***10 days***	***Fri 1/8/10***	***Thu 1/21/10***
78	***Operate system through 40 hour "break-in" period***	***5 days***	***Fri 1/22/10***	***Thu 1/28/10***
79	***Demonstrate X-pump technology 24/5 for cumulative 500 hrs***	***25 days***	***Fri 1/29/10***	***Thu 3/4/10***
80	***Complete X-pump demonstration***	***15 days***	***Fri 3/5/10***	***Thu 3/25/10***
81	Submit project update report to DWR	4 days	Mon 8/17/09	Thu 8/20/09
82	Complete ADC Prop 50 testing	1 day	Fri 3/26/10	Fri 3/26/10
83	Write final report	30 days	Fri 3/26/10	Thu 5/6/10
84	Submit final report, billing, conclude project	2 days	Fri 5/7/10	Mon 5/10/10
85	Member/general workshop and publish results	2 days	Tue 5/11/10	Wed 5/12/10
86	Project Duration	743 days	Tue 4/3/07	Thu 2/4/10

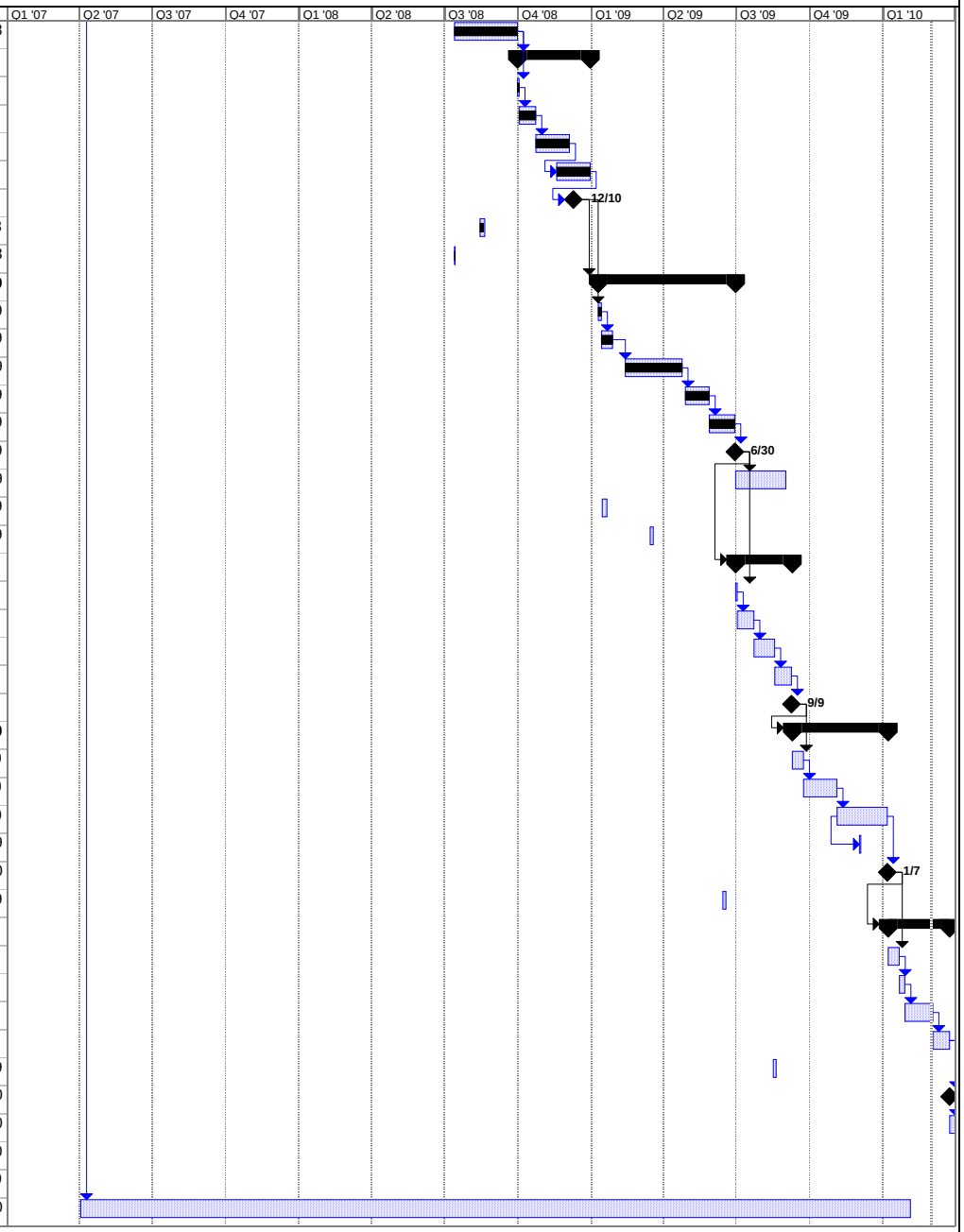

Project: ADC Proposed Project Schedu
Date: Tue 3/2/10

Task		Summary		Rolled Up Progress		Project Summary	
Progress		Rolled Up Task		Split		Group By Summary	
Milestone		Rolled Up Milestone		External Tasks		Deadline	

Attachments

1. Water Quality, Flow and Pressure and Power Data

TIME				CALCULATED PARAMETERS			TEMP	PRESSURES										FLOWS				MAIN PANEL KW METER				VFD KW METER			
		Operation	System	RO	Flux	Power		$P_{MF\text{-}in}$	$P_{MF\text{-}out}$	$P_{CF\text{-}in}$	$P_{CF\text{-}out}$	$P_{PX\text{-}Feed\ In}$	$P_{PX\text{-}conc\ out}$	$P_{PX\text{-}boost\ suct}$	$P_{F\text{-}SYS}$	$P_{C\text{-}SYS}$	$P_{P\text{-}SYS}$	$Q_{F\text{-}HP\ Pump}$	$Q_{PX\ Pump}$	$Q_{Feed\ PX\text{-}In}$	$Q_{P\text{-}SYS}$	A_{sys}	P HP/PX	P booster	Power	PX power	HP Power	Feed Pump	
Date	Time	Time	Recovery %	Recovery %	Gfd	kWh/m3	Influent	(psi)	(psi)	(psi)	(psi)	(psi)	(psi)	(psi)	(psi)	(psi)	(psi)	(gpm)	(gpm)	(gpm)	(gpm)	amp	(kw)	(kw)	Factor	(kw)	(kw)	(kw)	Notes
MM/DD/YY	hh:mm	hh.hh					Temp F	1	2	3	4	5	6	7	8	9	10	11	12	13	14	15	16	17	18	19	20	21	
PX Unbalanced High Recovery Test - Hydranautics SWC5 Membranes											**Membrane Ripening Period**																		
04/02/09	9:30	10697.49	45.6%	45.6%	9.02	2.01	59.0	42.2	41.1	40.1	31.2	29.9	21.8	871	898	881	4.1	54.0	62.78	62.65	52.6	31.17	23.97	nd	0.921	1.13	22.0	5.01	bl
04/03/09	9:14	10721.21	50.7%	45.4%	8.98	2.13	59.0	42.0	41.0	40.1	31.1	29.9	24.1	923	945	939	4.0	54.0	62.92	51.02	52.4	33.39	25.34	nd	0.911	1.12	23.3	4.55	bl
04/07/09	9:16	10746.34	55.7%	45.4%	8.97	2.33	58.0	40.5	39.8	39.0	30.8	29.9	25.9	1018	1039	1024	3.9	54.0	62.97	41.62	52.3	36.89	27.71	nd	0.916	1.16	25.6	4.04	bl
04/08/09	9:34	10770.03	61.1%	45.5%	9.00	2.60	59.0	40.5	39.9	39.2	30.5	29.9	27.2	1137	1159	1141	4.0	55.0	62.99	33.36	52.5	40.65	30.95	nd	0.921	1.15	28.8	3.86	bl
04/09/09	10:05	10794.56	45.5%	45.5%	7.49	1.93	57.0	42.7	41.9	41.0	31.1	30.1	24.0	849	862	859	3.0	46.0	52.24	52.35	43.7	25.91	19.19	nd	0.882	0.76	17.8	4.36	bl
04/10/09	10:04	10818.54	50.6%	50.5%	8.97	2.14	58.0	43.2	42.3	41.5	30.9	29.9	23.9	958	975	961	3.8	54.0	51.24	51.03	52.3	33.32	25.44	nd	0.909	0.81	23.9	4.73	bl
04/14/09	10:23	10846.48	56.0%	50.6%	9.00	2.31	58.0	41.7	40.9	40.1	30.8	30.0	26.0	1035	1045	1040	4.1	54.0	51.33	41.24	52.5	36.41	27.53	nd	0.914	0.82	26.0	4.18	bl
04/16/09	9:47	10883.89	61.1%	50.5%	9.00	2.55	56.0	41.8	41.0	40.4	30.9	30.0	27.5	1140	1159	1148	4.2	55.0	51.41	33.48	52.5	39.70	30.36	nd	0.918	0.84	28.7	4.07	bl
04/17/09	10:02	10908.14	45.7%	45.5%	7.51	1.99	57.0	43.2	42.3	41.8	31.1	30.0	24.1	878	895	880	3.1	46.0	52.36	52.04	43.8	26.51	19.75	nd	0.883	0.79	18.3	4.43	bl
04/21/09	9:06	10929.9	55.9%	55.7%	8.98	2.34	58.0	41.1	40.3	39.8	30.1	29.3	25.8	1062	1078	1067	3.3	55.0	41.62	41.38	52.4	37.16	27.88	nd	0.914	0.48	26.5	4.2	bl
04/22/09	9:33	10954.35	60.9%	55.7%	9.00	2.56	57.0	42.1	41.5	40.9	30.5	29.9	27.2	1155	1165	1159	3.8	55.0	41.72	33.68	52.5	40.24	30.51	nd	0.919	0.48	29.1	4.05	bl
04/23/09	10:07	10978.92	45.6%	45.6%	7.53	1.97	57.0	44.9	44.1	43.3	31.0	30.0	24.1	868	882	878	2.9	46.0	52.37	52.42	43.9	26.32	19.65	nd	0.884	0.76	18.2	4.8	bl
04/24/09	8:46	11001.57	61.1%	60.9%	8.98	2.60	58.0	45.2	44.6	44.0	30.5	29.9	27.2	1185	1200	1192	3.9	55.0	33.65	33.43	52.4	40.62	30.97	nd	0.917	0.30	29.6	4.45	bl
04/29/09	9:27	11049.71	45.6%	45.5%	7.51	1.94	56.0	46.2	45.3	44.7	31.1	30.0	23.9	855	867	860	3.6	46.0	52.42	52.28	43.8	26.03	19.31	nd	0.885	0.88	17.3	4.86	bl
04/30/09	10:10	11074.27	50.8%	45.5%	7.49	2.06	57.0	45.1	44.4	43.8	30.9	30.1	25.9	905	922	918	3.7	46.0	52.29	42.37	43.7	27.34	20.47	nd	0.892	0.85	19.0	4.55	bl
05/01/09	9:36	11092.98	56.1%	45.7%	7.51	2.25	58.0	44.3	43.9	43.2	30.2	29.9	27.0	998	1015	1001	2.6	46.0	51.98	34.28	43.8	29.67	22.36	nd	0.901	0.86	20.9	4.1	bl
05/05/09	9:26	11118.78	61.2%	45.6%	7.49	2.51	58.0	43.5	43.0	42.6	30.1	29.8	27.9	1101	1120	1110	4.6	46.0	52.12	27.65	43.7	32.97	24.91	nd	0.906	0.51	23.3	3.89	bl
05/06/09	7:53	11141.23	66.1%	45.3%	7.44	2.81	56.0	44.0	43.8	43.2	30.1	30.0	28.4	1235	1242	1239	4.5	46.0	52.36	22.21	43.4	36.53	27.67	nd	0.909	0.95	26.1	3.82	bl
05/07/09	9:32	11166.89	45.8%	45.7%	7.53	2.00	57.0	48.1	47.2	46.6	30.8	29.9	23.9	879	897	882	3.1	46.0	52.21	52.05	43.9	27.09	19.93	nd	0.888	0.87	18.4	5.18	bl
05/08/09	12:10	11193.46	46.7%	50.2%	7.47	2.06	57.0	48.0	47.2	46.5	30.5	29.8	24.2	918	930	920	5.0	46.0	43.26	49.70	43.6	27.39	20.40	nd	0.891	0.50	18.9	5.2	bv, unbalanced to adjust PX mixing ie. s
05/12/09	9:26	11279.15	55.9%	51.0%	7.53	2.20	60.0	48.0	47.5	47.0	30.1	29.9	26.9	980	998	985	5.5	46.0	42.19	34.64	43.9	29.34	21.92	nd	0.897	0.45	20.6	4.64	bl
05/13/09	8:55	11302.65	61.1%	50.8%	7.49	2.43	60.0	49.3	48.9	48.5	30.0	29.9	27.5	1083	1099	1088	4.9	46.0	42.27	27.84	43.7	32.09	24.12	nd	0.903	0.50	22.7	4.65	bl
05/18/09	10:06	11353.85	45.7%	45.6%	7.51	1.90	64.0	53.1	52.2	51.6	30.8	29.9	23.2	830	845	839	4.9	46.0	52.28	52.05	43.8	25.83	18.91	nd	0.882	0.75	17.4	5.88	bl
05/20/09	10:10	11378.47	48.5%	55.9%	7.51	2.14	60.0	49.0	48.2	47.7	30.5	29.9	25.1	968	979	970	5.2	46.5	34.57	46.52	43.8	28.14	21.29	nd	0.909	0.37	20.2	5.08	bv, unbalanced to adjust PX mixing ie. s
05/21/09	10:10	11402.29	61.3%	56.2%	7.49	2.43	60.0	46.5	46.1	45.7	29.9	29.8	27.6	1100	1107	1101	4.7	46.5	34.11	27.54	43.7	31.61	24.12	nd	0.917	0.37	22.9	4.29	bl
05/22/09	9:53	11426.19	45.7%	45.7%	7.53	1.98	60.0	53.0	52.1	51.3	31.0	30.0	24.0	870	885	879	5.4	46.5	52.22	52.26	43.9	26.10	19.72	nd	0.903	0.72	17.9	5.85	bl
05/25/09	10:40	11498.97	46.5%	60.9%	7.47	2.37	61.0	55.0	54.1	53.4	28.3	27.0	22.0	1075	1080	1078	5.2	46.5	27.95	50.18	43.6	30.76	23.44	nd	0.911	0.22	22.4	6.1	bv, unbalanced to adjust PX mixing ie. s
05/28/09	9:04	11534.43	45.7%	45.7%	7.49	1.97	60.0	52.5	51.5	50.9	30.8	29.9	23.9	859	877	862	3.1	47.0	51.92	51.86	43.7	25.69	19.52	nd	0.898	0.78	18.0	5.73	bl
05/29/09	11:02	11558.51	61.3%	45.6%	7.47	2.50	60.0	32.1	31.5	31.1	30.0	29.9	28.0	1099	1115	1101	5.1	46.5	52.11	27.56	43.6	32.31	24.71	nd	0.912	0.78	22.9	2.67	bl
06/01/09	10:13	11629.68	61.0%	45.6%	7.49	2.53	60.0	32.1	31.8	31.2	30.0	29.9	27.7	1102	1120	1110	5.1	47.0	52.16	27.91	43.7	32.69	25.11	nd	0.917	0.80	23.4	2.71	bl
06/02/09	9:53	11653.34	61.2%	45.6%	7.49	2.53	60.0	32.1	31.7	31.2	30.0	29.9	27.6	1104	1121	1115	5.1	48.0	52.04	27.74	43.7	32.86	25.07	nd	0.918	0.78	23.3	2.73	bl
06/03/09	9:45	11677.20	61.3%	45.7%	7.47	2.51	60.0	32.0	31.6	31.1	29.9	29.8	27.5	1099	1117	1101	5.0	48.0	51.78	27.48	43.6	32.51	24.84	nd	0.914	0.75	23.1	2.74	bl
06/04/09	8:30	11698.37	61.1%	45.8%	7.51	2.51	60.0	32.1	31.7	31.1	30.0	29.9	27.8	1100	1120	1105	5.2	48.0	51.88	27.86	43.8	32.39	24.97	nd	0.916	0.78	23.3	2.72	bl
06/05/09	8:58	11722.83	61.0%	45.8%	7.51	2.51	61.0	32.0	31.7	31.1	30.0	29.9	27.7	1101	1120	1107	5.2	48.0	51.84	28.05	43.8	32.79	25.01	nd	0.915	0.80	23.3	2.73	bl
06/08/09	9:20	11795.22	61.2%	45.6%	7.53	2.49	62.0	32.1	31.5	31.1	29.8	29.8	27.4	1100	1117	1101	5.0	48.0	52.36	27.84	43.9	32.63	24.85	nd	0.917	0.82	23.2	2.75	bl
06/09/09	9:43	11819.58	61.4%	45.5%	7.51	2.51	62.0	32.2	31.9	31.3	30.0	29.9	27.6	1100	1120	1103	5.2	48.0	52.43	27.57	43.8	32.71	24.98	nd	0.916	0.78	23.3	2.75	bl
06/10/09	9:33	11843.42	60.9%	45.7%	7.51	2.52	62.0	32.1	31.8	31.1	29.8	29.6	27.5	1101	1120	1110	5.0	48.0	52.05	28.13	43.8	32.47	25.04	nd	0.917	0.75	23.4	2.8	bl
06/11/09	8:46	11862.30	61.4%	45.7%	7.49	2.53	62.0	32.1	31.7	31.1	29.9	29.9	27.5	1101	1120	1107	5.1	48.0	52.02	27.44	43.7	32.48	25.09	nd	0.915	0.78	23.3	2.75	bl
06/12/09	9:25	11886.91	61.3%	45.5%	7.49	2.51	62.0	32.3	31.9	31.3	29.9	29.9	27.6	1102	1120	1110	5.1	48.0	52.25	27.63	43.7	32.47	24.94	nd	0.919	0.80	23.4	2.83	bl
06/15/09	8:45	11958.28	61.3%	45.5%	7.51	2.52	62.0	32.6	32.0	31.7	29.9	29.9	27.5	1101	1120	1110	5.1	48.0	52.41	27.63	43.8	32.68	25.09	nd	0.919	0.75	23.3	2.85	bl
06/16/09	15:05	11987.80	60.8%	45.9%	7.51	2.48	63.0	32.0	31.5	31.0	29.0	29.0	27.0	1085	1105	1095	4.6	48.0	51.65	28.21	43.8	32.51	24.63	nd	0.921	0.80	23.2	2.75	bv
06/17/09	14:15	12011.00	61.1%	45.3%	7.46	2.52	63.0	32.0	31.4	31.0	29.0	29.3	27.0	1100	1120	1110	4.5	48.0	52.49	27.73	43.5	32.88	24.87	nd	0.918	0.90	23.2	2.9	bv
06/18/09	10:40	12031.39	61.3%	45.9%	7.53	2.49	63.0	32.0	31.5	31.0	29.5	29.2	27.2	1105	1125	1115	5.2	48.0	51.82	27.68	43.9	32.84	24.87	nd	0.924	0.80	23.3	2.7	bv
06/22/09	8:52	12125.60	61.2%	45.8%	7.51	2.56	61.0	32.1	31.7	31.1	29.9	29.8	27.6	1120	1138	1123	3.1	50.0	51.78	27.74	43.8	33.29	25.44	nd	0.919	0.75	23.7	2.77	bl
06/24/09	9:31	12149.96	61.4%	45.7%	7.51	2.56	61.0	32.2	31.8	31.2	29.9	29.8	27.7	1119	1139	1123	5.1	49.5	51.97	27.55	43.8	33.71	25.42	nd	0.909	0.78	23.8	2.75	bl
06/25/09	9:32	12173.97	61.4%	45.6%	7.51	2.54	62.0	32.3	31.9	31.3	30.0	29.9	27.8	1115	1125	1119	5.2	50.0	52.18	27.53	43.8	33.33	25.23	nd	0.911	0.80	23.5	2.73	bl
06/26/09	14:35	12203.02	61.1%	45.8%	7.49	2.53	62.0	32.0	31.3	31.0	29.5	29.5	27.4	1110	1125	1119	4.6	50.0	51.77	27.78	43.7	33.31	25.15	nd	0.911	0.77	23.4	2.85	bl
06/29/09	9:50	12270.27	61.3%	45.7%	7.49	2.55	62.0	32.3	31.9	31.3	29.9	29.9	27.7	1118	1131	1120	5.1	50.0	51.96	27.57	43.7	33.20	25.29	nd	0.909	0.80	23.7	2.87	bl
06/30/09	8:50	12293.27	61.2%	45.7%	7.49	2.54	62.0	32.5	31.9	31.3	30.0	29.9	27.7	1107	1123	1117	5.1	50.0	51.85	27.65	43.7	33.38	25.16	nd	0.908	0.75	23.4	2.77	bl

Water Quality Data

TIME			pH			CONDUCTIVITY						TDS							TURBIDITY		SDI	BORON			OTHER					
			pH			Conductivity (mS/cm)						TDS (mg/L)							Turbidity (NTU)		Density Index	Boron (mg/L)				Inhibitor			FEED	
Date	Time	Operation Time	$pH_{F\text{-}sys}$	$pH_{P\text{-}sys}$	$pH_{C\text{-}sys}$	$C_{CF\text{-}out}$	$C_{F\text{-}PX\text{-}out}$	$C_{F\text{-}sys}$	$C_{P\text{-}sys}$	$C_{C\text{-}sys}$	$C_{C\text{-}PX\text{-}out}$	$TDS_{CF\text{-}out}$	$TDS_{F\text{-}PX\text{-}out}$	PX % Inc	$TDS_{F\text{-}sys}$	$TDS_{P\text{-}sys}$	$TDS_{C\text{-}sys}$	$TDS_{C\text{-}PX\text{-}out}$	$NTU_{MF\text{-}in}$	$NTU_{CF\text{-}out}$	$SDI_{CF\text{-}out}$	$B_{\text{-}concentrate}$	$B_{F\text{-}sys}$	$B_{P\text{-}sys}$	V_{TANK}	Pump Speed	HP VFD Speed	PX VFD Speed	VFD Speed	Notes
MM/DD/YY	hh:mm	hh.hh	SC5	SC11	SC6	SC3	SC4	SC5	SC11	SC6	SC7	SC3	SC4		SC5	SC11	SC6	SC7	CART	meter	CART		SC5	SC11	(gallons)	(gph)	(Hertz)	(Hertz)	(Hertz)	
PX Unbalanced High Recovery Test - Hydranautics SWC5 Membranes												**Membrane Ripening Period**																		
04/02/09	10:01	10697.99	7.81	6.11	7.59	49.29	52.77	50.63	274.3	85.89	83.71	31.62	34.11	7.9%	32.58	130.70	61.97	59.92	1.064	0.031	2.8	7.8	4.5	0.79	nd	nd	54.39	36.31	59.97	bl
04/03/09	10:02	21.99	7.76	5.99	7.56	49.41	58.81	52.38	292.8	90.95	90.62	31.71	38.93	22.8%	33.84	139.80	66.63	66.19	3.601	0.029	2.5	8.3	4.9	0.85	nd	nd	54.38	36.15	58.41	bl
04/07/09	9:47	10746.86	7.74	5.86	7.39	49.32	68.82	55.81	333.7	98.46	98.36	31.64	47.07	48.8%	36.42	159.80	73.36	73.18	1.785	0.030	2.2	9.3	5.2	0.92	nd	nd	54.38	36.42	56.55	bl
04/08/09	10:06	10770.57	7.65	5.73	7.42	49.41	79.81	62.64	387.9	107.3	107.6	31.70	56.62	78.6%	42.03	186.50	81.61	81.56	3.032	0.028	2.3	10.0	5.5	1.00	nd	nd	54.62	36.42	55.98	bl
04/09/09	10:32	10795.00	7.62	5.79	7.44	49.36	52.97	50.61	283.3	87.01	84.07	31.64	34.23	8.2%	32.56	135.10	62.94	60.26	2.236	0.030	2.1	8.2	4.6	0.87	nd	nd	45.09	30.27	57.97	bl
04/10/09	10:30	10818.98	7.64	5.75	7.43	49.38	53.96	51.14	271.8	93.24	90.15	31.68	34.94	10.3%	32.94	129.40	68.62	65.81	2.375	0.030	2.3	8.5	4.7	0.82	nd	nd	54.19	30.53	59.35	bl, PX mixing issues
04/14/09	10:57	10847.05	7.59	5.69	7.38	49.51	62.74	53.76	318.1	100.4	99.82	31.78	42.08	32.4%	34.81	152.20	75.16	74.47	2.279	0.029	2.6	9.3	4.9	0.88	nd	nd	54.48	30.43	57.26	bl
04/16/09	10:14	10884.35	7.52	5.57	7.29	49.54	73.02	57.71	341.5	107.9	107.6	31.81	50.54	58.9%	37.98	163.70	81.93	81.60	2.138	0.027	2.4	10.0	5.4	0.94	nd	nd	54.44	30.88	57.06	bl
04/17/09	10:30	10908.61	7.53	5.62	7.37	49.56	53.76	51.33	262.7	87.07	83.97	31.82	34.77	9.3%	33.07	125.20	63.01	60.18	2.139	0.032	1.9	7.9	4.7	0.84	nd	nd	45.11	30.59	58.38	bl
04/21/09	9:44	10930.53	7.55	5.64	7.39	49.17	59.11	52.41	319.8	102.8	99.16	31.42	39.01	24.2%	33.81	152.60	77.25	73.89	2.664	0.029	2.3	9.4	4.7	0.91	nd	nd	54.38	26.82	57.46	bl, PX mixing issues
04/22/09	10:00	10954.79	7.53	5.53	7.26	49.52	67.82	55.58	346.9	110.3	108.7	31.75	46.26	45.7%	36.23	166.10	84.06	82.58	2.003	0.030	2.2	11.0	5.0	0.95	nd	nd	54.84	26.67	57.12	bl
04/23/09	10:33	10979.34	7.66	5.98	7.49	49.48	53.61	51.09	279.8	86.93	83.88	31.74	34.66	9.2%	32.88	133.40	62.92	60.08	1.664	0.031	3	8.2	4.5	0.89	nd	nd	45.32	30.35	59.97	bl
04/24/09	9:17	11002.09	7.67	5.84	7.36	49.57	62.81	54.26	369.1	114.1	108.1	31.83	42.17	32.5%	35.16	177.10	87.51	82.02	1.776	0.031	3.7	11.0	4.9	0.98	nd	nd	54.49	22.76	58.97	bl, PX mixing issues
04/29/09	9:55	11050.18	7.82	6.33	7.62	49.55	53.55	50.91	307.1	86.65	83.88	31.81	34.64	8.9%	32.79	146.70	62.67	60.11	1.614	0.031	4.1	7.8	4.4	0.86	nd	nd	45.32	30.67	60.36	bl
04/30/09	10:42	11074.81	7.79	6.21	7.56	49.57	59.88	52.95	344.1	91.69	90.99	31.83	39.82	25.1%	34.22	164.90	67.22	66.52	1.749	0.029	4.3	8.3	4.7	0.93	nd	nd	45.32	30.50	59.17	bl
05/01/09	10:07	11093.51	7.72	6.01	7.47	49.51	69.13	56.42	386.7	99.26	99.08	31.77	47.36	49.1%	36.92	185.50	74.02	73.79	2.614	0.030	3.9	9.0	5.0	0.99	nd	nd	45.29	30.53	57.79	bl
05/05/09	9:55	11119.27	7.61	5.85	7.37	49.42	79.86	60.69	450.8	107.3	107.2	31.71	56.49	78.1%	40.37	217.10	81.36	81.25	2.368	0.030	3.3	9.9	5.6	1.10	nd	nd	45.53	31.11	56.94	bl
05/06/09	8:22	11141.72	7.51	5.69	7.26	49.44	89.95	66.56	488.2	115.6	115.4	31.73	65.63	106.8%	45.21	235.40	88.81	88.62	2.823	0.030	3.2	11.0	5.8	1.20	nd	nd	45.51	31.35	56.98	bl
05/07/09	10:00	11167.35	7.57	5.86	7.39	49.51	54.19	51.43	286.1	87.26	83.96	31.76	35.09	10.5%	33.13	136.30	63.18	60.19	3.956	0.030	2.6	7.9	4.7	0.88	nd	nd	45.49	30.65	61.53	bl
05/08/09	12:20	11193.61	7.49	6.64	7.41	49.57	54.25	51.17	310.5	91.95	85.74	31.83	35.14	10.4%	32.95	148.00	67.42	61.67	3.898	0.030	2.6	8.5	4.7	0.93	nd	nd	45.47	27.23	62.03	bv, simulated 7-10% PX mixing
05/12/09	10:01	11279.73	7.85	6.26	7.59	49.42	62.58	53.85	403.1	99.32	97.64	31.71	41.98	32.4%	34.85	193.60	74.06	72.54	1.891	0.030	4.2	9.1	4.9	1.00	nd	nd	45.46	26.57	60.27	bl
05/13/09	9:28	11303.19	7.81	6.11	7.53	49.38	74.05	57.53	469.8	107.2	106.9	31.68	51.34	62.1%	37.83	226.30	81.27	80.98	2.362	0.029	3.8	10.0	5.5	1.20	nd	nd	45.44	27.28	61.04	bl
05/18/09	11:10	11354.91	8.06	7.19	7.82	49.52	53.19	50.76	381.5	86.06	83.65	31.81	34.42	8.2%	32.73	183.20	62.19	59.89	1.216	0.034	2.7	7.9	4.8	1.00	nd	nd	45.48	30.85	64.93	bl
05/20/09	10:38	11379.93	7.81	6.18	7.52	49.43	54.36	51.16	402.9	98.74	87.41	31.71	35.29	11.3%	32.94	193.50	73.54	63.32	2.429	0.032	3.7	9.3	4.8	1.10	nd	nd	45.46	23.23	61.75	bl
05/21/09	10:44	11403.04	7.66	5.93	7.36	49.16	67.41	56.52	460.5	108.2	105.9	31.54	45.88	45.5%	36.98	221.70	82.25	80.12	2.306	0.032	2.3	10.0	5.2	1.20	nd	nd	45.41	23.17	59.11	bl
05/22/09	10:33	11426.85	7.69	6.06	7.48	49.42	54.14	50.95	307.7	87.09	83.59	31.72	35.07	10.6%	32.81	147.10	63.07	59.83	2.223	0.032	2.2	8.1	4.8	0.94	nd	nd	45.49	30.91	64.62	bl
05/25/09	11:10	11499.49	7.76	5.98	7.41	49.41	54.96	51.38	460.7	108.3	83.92	31.71	35.76	12.8%	33.12	221.90	82.41	60.16	1.391	0.031	2.1	10.0	4.8	1.10	nd	nd	45.44	19.54	66.00	bl
05/28/09	9:35	11534.96	7.67	5.99	7.48	49.42	54.31	51.14	321.3	86.79	83.79	31.71	35.19	11.0%	32.94	153.70	62.81	60.01	1.757	0.032	2.1	7.9	4.8	0.96	nd	nd	45.47	31.06	64.55	bl
05/29/09	11:32	11559.00	7.65	5.89	7.41	49.39	77.71	59.43	439.7	105.3	105.1	31.66	54.58	72.4%	39.36	211.60	79.52	79.34	2.335	0.048	1.7	9.8	5.5	1.10	nd	nd	45.44	31.26	49.95	bl
06/01/08	10:43	11630.18	7.61	5.79	7.39	49.43	78.59	59.45	421	106.4	106.3	31.71	55.42	74.8%	39.39	202.40	80.53	80.47	2.111	0.045	1.7	nd	nd	nd	nd	nd	45.79	31.73	49.59	bl
06/02/09	10:18	11653.76	7.65	5.78	7.41	49.36	78.55	58.51	423.7	106.6	106.5	31.65	55.41	75.1%	38.62	203.80	80.68	80.53	1.905	0.045	1.8	nd	nd	nd	nd	nd	45.80	31.67	49.66	bl
06/03/09	10:23	11677.84	7.67	5.81	7.41	49.39	78.69	60.18	430.1	106.2	106.1	31.68	55.51	75.2%	40.01	206.80	80.43	80.25	2.151	0.046	2.2	9.5	5.4	1.1	nd	nd	45.79	31.71	49.66	bl
06/04/09	9:02	11698.92	7.68	5.88	7.42	49.36	78.28	61.71	464.1	106.3	106.1	31.67	55.11	74.0%	41.24	223.70	80.45	80.22	2.012	0.047	2.4	nd	nd	nd	nd	nd	45.80	31.29	49.72	bl
06/05/02	9:27	11723.33	7.62	5.81	7.39	49.31	78.86	60.26	446.7	106.4	106.5	31.61	55.62	76.0%	40.04	215.10	80.67	80.59	2.237	0.034	2.5	nd	nd	nd	nd	nd	45.81	31.46	49.66	bl
06/08/09	9:50	11795.71	7.66	5.92	7.44	49.21	78.93	59.96	476.7	105.8	106	31.56	55.67	76.4%	39.81	229.90	80.19	80.12	1.713	0.032	2.6	nd	nd	nd	nd	nd	45.79	32.17	50.18	bl
06/09/09	10:21	11820.23	7.72	5.89	7.46	49.29	78.96	60.73	453.7	106.4	106.2	31.62	55.79	76.4%	40.45	218.50	80.49	80.33	3.155	0.032	2.5	nd	nd	nd	nd	nd	45.81	32.08	49.85	bl
06/10/09	10:03	11843.92	7.69	5.86	7.44	49.22	78.36	58.09	438.1	106.1	106.1	31.56	55.23	75.0%	38.29	210.70	80.36	80.24	2.663	0.031	2.3	nd	nd	nd	nd	nd	45.79	31.76	50.11	bl
06/11/09	9:15	11862.78	7.72	5.90	7.47	49.27	79.11	61.15	480.6	106.5	106.5	31.61	55.91	76.9%	40.79	231.80	80.71	80.61	1.693	0.031	2.3	nd	nd	nd	nd	nd	45.79	31.63	49.84	bl
06/12/09	9:57	11887.47	7.66	5.85	7.43	49.34	79.03	61.59	455.2	106.4	106.4	31.65	55.75	76.1%	41.15	219.20	80.71	80.53	2.244	0.041	2.1	nd	nd	nd	nd	nd	45.79	31.64	50.22	bl
06/15/09	9:26	11658.88	7.69	5.87	7.48	49.31	79.19	60.16	455.6	106.6	106.6	31.61	55.94	77.0%	39.97	219.30	80.75	80.63	1.643	0.063	2.5	nd	nd	nd	nd	nd	45.79	31.93	50.32	bl
06/16/09	14:50	11987.56	7.81	6.64	7.56	49.12	78.04	58.04	476.5	105.5	105.2	31.72	54.86	73.0%	38.23	229.70	79.76	79.44	2.153	0.047	3.2	nd	nd	nd	nd	nd	45.79	31.85	50.23	bv
06/17/09	14:25	12011.13	7.80	6.17	7.53	49.16	80.06	60.32	482.7	106.9	106.6	31.53	56.67	79.7%	40.08	232.80	80.99	80.64	1.779	0.048	3.3	9.6	5.5	1.1	nd	nd	45.78	32.32	50.01	bv
06/18/09	10:50	12031.56	7.78	6.10	7.50	49.28	79.47	59.48	475.3	106.5	106.1	31.62	56.19	77.7%	39.43	229.20	80.66	80.26	0.048	0.048	3.4	nd	nd	nd	nd	nd	45.79	31.90	50.35	bv
06/22/09	9:24	12126.13	7.65	5.75	7.41	49.23	78.93	59.02	407.5	106.8	106.7	31.53	55.68	76.6%	39.03	195.70	80.95	80.81	2.615	0.031	2.5	9.6	5.3	1.1	nd	nd	45.79	31.64	49.91	bl
06/24/09	10:15	12150.69	7.67	5.81	7.42	49.29	78.85	61.19	445.5	106.5	106.6	31.62	55.61	75.9%	40.84	214.40	80.66	80.72	2.083	0.034	3.2	nd	nd	nd	nd	nd	45.79	31.64	49.75	bl
06/25/09	9:59	12174.42	7.78	5.91	7.51	49.38	78.99	61.29	465.3	106.3	106.2	31.69	55.79	76.0%	40.92	224.30	80.49	80.34	1.587	0.033	2.3	9.5	5.4	1.1	nd	nd	45.81	31.76	49.95	bl
06/26/09	15:12	12203.66	7.75	5.93	7.47	49.16	78.12	61.64	459.6	105.8	105.7	31.54	54.95	74.2%	41.17	221.30	80.03	79.89	3.023	0.037	2.2	nd	nd	nd	nd	nd	45.79	31.73	50.51	bl
06/29/09	10:30	12270.96	7.71	5.88	7.48	49.31	78.11	59.72	437.1	105.9	105.9	31.64	54.98	73.8%	39.62	210.30	80.22	80.11	1.493	0.034	2.4	nd	nd	nd	nd	nd	45.80	31.71	50.71	bl
06/30/09	9:21	12293.79	7.73	5.87	7.47	49.32	78.61	60.71	447.2	106.3	106.2	31.66	55.45	75.1%	40.45	215.30	80.48	80.32	1.346	0.034	2.4	9.6	5.3	1.1	nd	nd	45.79	31.70	50.01	bl

Quarterly Technical Progress Report
Covering Period July 1, 2009 to September 30, 2009
Date of Report 7-27-10

Agreement Number:	4600007440
Subject:	Prop 50 II Desal 46-7440 P-04 ADC
DWR ID Number:	n/a Department of Water Resources Office of Water Use Efficiency 901 P Street, Third Floor Sacramento, CA 95814
Project Title:	Optimizing Seawater Reverse Osmosis for Affordable Desalination
Recipient Organization:	Affordable Desalination Collaboration 2419 E. Harbor Blvd, #173 Ventura, CA 93001
Partners:	See attached membership list.
Contact Person:	John MacHarg 2419 E. Harbor Blvd, #173 Ventura, CA 93001 Tel: 650-283-7976 Fax: 805-658-8060 e-mail: jmacharg@affordabledesal.com
Date Submitted:	7-27-10

_____
Signed, Reviewed by designated representative

1. **Project Objective:** The objectives of the Affordable Desalination Collaboration (ADC) are to demonstrate affordable, reliable and environmentally responsible reverse osmosis desalination technologies and to provide a platform by which cutting edge technologies can be tested and measured for their ability to reduce the overall cost of the seawater reverse osmosis (SWRO) treatment process.

2. **Project Description / Background:** A key challenge facing the seawater desalination industry today is to develop a new generation of reverse osmosis (RO) plants that deliver high-quality, fresh water at a reduced economic and environmental cost. The key to achieving these goals is to address the most

expensive and environmentally taxing component of operating a desalination system: energy.

The ADC was formed in 2004 to fund and execute the first part of a multiple phase Affordable Desalination Demonstration Project. The ADC members are a group of leading government agencies, municipalities, RO manufacturers, consultants and professionals partnering together to help reduce the costs associated with desalination.

The first phase of the project, ADC I, built and operated a demonstration plant at the United States Navy's Seawater Desalination Test Facility in Pt. Hueneme, California. The plant utilized a combination of proven technologies developed primarily in the U.S. and California to demonstrate that seawater desalination can be optimized to make it technically and economically viable. ADC I achieved remarkable results by desalinating seawater at energy levels between 6.0-6.9 kWh/kgal (1960-2250 kWh/acre-ft). On average, these numbers make the power for desalination comparable to the power required for the State Water and the Colorado River Aqueduct projects and they are approximately 35% lower than experts had been projecting for seawater desalination. For the approximate 100 mgd of proposed seawater desalination projects in Southern California alone, this 35% savings equates to approximately 140,000 Mega Watt hours in energy savings per year.

This second phase (ADC II) will pursue the following demonstration, and development programs.

a. Test and demonstrate additional manufacturers' membranes through a protocol similar to Phase I.
b. Test and demonstrate DOW FILMTEC's next generation "hybrid-membrane".
c. Develop and demonstrate new process designs that are possible as a result of the isobaric energy recovery technologies. We will use the ADC pilot system to test and demonstrate these new flow schemes in order to push the recoveries above 50%, while still maintaining good water quality and low energy performance.
d. Test and demonstrate ZENON ultra-filtration technology ahead of our ADC pilot system. This portion of the test should build on and compliment the other pre-filtration studies that are taking place in the region.
e. Test and demonstrate Ocean Pacific Technology's (OPT) Axial Piston Pressure Exchanger (AP^2X) pump technology.

Below are the additional test items related to our no-cost extension request dated 7-23-08

f. Re-run Toray test due to un-explained step change reduction in performance during first test.

g. Test and demonstrate additional set of DOW-FILMTEC - SW30XHR-400i high boron rejection membranes to demonstrate better water quality and higher Boron rejection than previously tested DOW membranes.
h. Test and demonstrate additional set of high rejection Koch membranes to demonstrate better water quality than previously tested Koch Membranes.
i. Test and demonstrate Amiad's Micro Fiber pre-filtration technology that promises to reduce the cost and foot print compared to current media filter and advanced filtration technologies.
j. Test and demonstrate new X-pump and energy recovery technology that promises significant energy reductions for medium sized SWRO systems and will be simpler to apply and operate compared to traditional pump and isobaric technologies.

Thus far we have completed the five sets of manufacturers' membrane testing that including the Toray TM800C membrane test and retest (Task 2 and 6), the Koch 2822HF-400 membrane test (Task 3) and the Hydranautics SWC5 membrane (Task 4), DOW-FIMTEC Hybrid (Task 5) and the DOW-FILMTEC - SW30XHR-400i high boron rejection membranes (Task 7). In addition, we have completed the Unbalanced High Recovery Testing (Task 9).

- Start Date of Contract: April 2, 2007
- End Date of Contract: June 30, 2010

3. Progress and Status:

During Q3-09 we completed the Unbalanced PX High Recovery testing (Task 9) test protocol. We are continuing to operate and demonstrate the Zenon 1000 system, which is performing very well. We are also continuing the Amiad Fiber Filter Demonstration (Task 12). Performance of the Amiad system has been promising with SDI's averaging 4.8, but at times rising above the typical membrane requirement of 5.0.

4. Percent Complete of Total Project: ~ 92%

5. Deliverables:

Trade Show/Conference/Publication	Date(s)	Author(s)	Presenter	DWR Submittal
Optimizing Lower Energy Seawater Desalination, The Affordable Desalination Collaboration	Nov-2009	Stephen Dundorf, John MacHarg, Bradley Sessions, Thomas F. Seacord	Stephen Dundorf	Q3-09
Permeate Recovery Rate Optimization at the Alicante Spain SWRO Plant	Nov-2009	Richard Stover, Antonio Ordonez Fernandez, Joan Galtes	Richard Stover	Q3-09
ADC Presentation at CA-NV-AWWA Desal Workshop	June-2009	John MacHarg	John Macharg	Q2-09
ADC Presentation UCLA Work shop	Feb-2009	n/a	John	Q1-09

			MacHarg	
Water Scarcity UNESCO UC Irvine	Dec-2008	John MacHarg	John MacHarg	Q4-08
ADC Base Lines SWRO System Performance, Water and Desalination Report	September 2008	John MacHarg, Tom Seacord, Bradley Sessions	n/a	Q3-08
Joint ADC-AMTA-SEDA workshop, Annual Conference, Naples, FL	July 2008	ADC-AMTA-SEDA	Various	Q3-08
ADC Completes Profile of SWRO Press Release	March 28, 2008	ADC	n/a	Q1-08
IDA World Conference, Gran Canaria, ADC II Update	October 21-26, 2007	Stephen Dundorf, Thomas F. Seacord, John MacHarg	Stephen Dundorf	Q3-07
Desalination and Water Reuse (DWR) Quarterly, Innovative Designs to be Tested in ADC II	Aug/Sept-07	John P. MacHarg	n/a	Q3-07
AMTA 2007 Annual Conference, Las Vegas, ADC I 10 mgd Application	July 23-27, 2007	Bradley Sessions, Tom Seacord, P.E.	Tom Seacord	Q2-07
AWWA Membrane Technology Conference, Tampa Florida, Collier County results	March 18-21, 2007	Brandon Yallaly, P.E., Tom Seacord, P.E., Steve Messner	Brandon Yallaly	Q2-07

6. **Expenditures:** See next page.

Affordable Desalination Collorboration
State of California Water Board Report
Quarter ending March 31, 2008

		Balances June 30, 2009			Q 3 Expenditures			Balances September 30, 2009		
	Budgetary Category (I)	Non State Share (II)	State Share (Grant) (III)	Total Project Costs (IV) = (II+III)	Non State Share (II)	State Share (Grant) (III)	Total Project Costs (IV) = (II+III)	Non State Share (II)	State Share (Grant) (III)	Total Project Costs (IV) = (II+III)
(a)	Administration									
	Salaries, wages	$ -	$ 59,113	$ 59,113		$ 17,250	$ 17,250	$ -	$ 41,863	$ 41,863
	Fringe benefits	$ -	$ 18,366	$ 18,366		$ 4,901	$ 4,901	$ -	$ 13,465	$ 13,465
	Supplies	$ -	$ 2,034	$ 2,034		$ 233	$ 233	$ -	$ 1,801	$ 1,801
	Equipment	$ -	$ 1,000	$ 1,000			$ -	$ -	$ 1,000	$ 1,000
	Consulting services	$ (25,000)	$ 6,305	$ (18,695)			$ -	$ (25,000)	$ 6,305	$ (18,695)
	Travel	$ (3,027)	$ 1,412	$ (1,614)		$ 234	$ 234	$ (3,027)	$ 1,178	$ (1,848)
(b)	Planning/design/engineering	$ (10,500)	$ 1,909	$ (8,591)			$ -	$ (10,500)	$ 1,909	$ (8,591)
(c)	Equipment purchases/Rentals/Rebates/Vouchers	$ 4,250	$ 1,763	$ 6,013			$ -	$ 4,250	$ 1,763	$ 6,013
(d)	Materials/Installation/Implementation	$ 69,000	$ 903	$ 69,903			$ -	$ 69,000	$ 903	$ 69,903
(e)	Implementation verification	$ 7,500	$ 2,500	$ 10,000			$ -	$ 7,500	$ 2,500	$ 10,000
(f)	Project legal/License/Insurance fees	$ -	$ 2,500	$ 2,500			$ -	$ -	$ 2,500	$ 2,500
(g)	Structures	$ -	$ -	$ -			$ -	$ -	$ -	$ -
(h)	Land Purchase/Easement	$ -	$ -	$ -			$ -	$ -	$ -	$ -
(i)	Environmental Compliance/Mitigation/Enhancement	$ -	$ -	$ -			$ -	$ -	$ -	$ -
(j)	Construction	$ -	$ -	$ -			$ -	$ -	$ -	$ -
(k)	Other (Operating Cash)	$ -	$ -	$ -			$ -	$ -	$ -	$ -
(l)	Operation, monitoring and assessment	$ -	$ 38,490	$ 38,490		$ 20,947	$ 20,947	$ -	$ 17,542	$ 17,542
(m)	Report preparation	$ 2,000	$ 2,500	$ 4,500			$ -	$ 2,000	$ 2,500	$ 4,500
(n)	Outreach and information sharing	$ 4,013	$ -	$ 4,013	$ 11,248		$ 11,248	$ (7,235)	$ -	$ (7,235)
(o)	Subtotal	$ 48,236	$ 138,794	$ 187,030	$ 11,248	$ 43,565	$ 54,813	$ 36,988	$ 95,228	$ 132,216
(p)	Overhead (8%)	$ -	$ 37,480	$ 37,480		$ 3,485			$ 33,995	$ 33,995
(q)	Contingency (10%)	$ -	$ 18,879	$ 18,879		$ -			$ 18,879	$ 18,879
(r)	Total (o+p+q)	$ 48,236	$ 195,152	$ 243,389	$ 11,248	$ 47,051	$ 54,813	$ 36,988	$ 148,102	$ 185,090

7. **Schedule Status:** Through Q3-09 we had been operating on schedule, however several items will be canceled from the schedule (Task 8, 10 and 11) going forward due to circumstances beyond the control of the ADC that include the Proposition 50 funding freeze and manufacturing partners equipment availability. The canceled items were part and parcel of an additional set of items from the no-cost extension request dated 7-23-08.

8. **Plans for Next Quarter:** The ADC will finish the testing and demonstration of the Zenon and Amiad pre-filtration systems and begin decommissioning the main demonstration system.

9. **Attachments:** n/a

All quarterly reports should be publicly disclosable and not contain confidential, proprietary or business sensitive information.

Task and % Complete Progress Table

Agreement Number	Starting Date:	Completion Date:	Quarter-Year	Report Number	PERCENT OF
4600007440	4.2.07	2.4.10	Q3-2009	10	
Grantee Agency Name: Affordable Desalination Collaboration		% Time Elapsed 80%	Total Grant Funds used $ 851,898	Grant funds this Qtr $ 47,051	
Name of Project: Optimizing Seawater Reverse Osmosis for Affordable Desalination					

TASKS	YEAR / MONTH	2008 Qtr 3	2008 Qtr 4	2009 Qtr 1	2009 Qtr 2	2009 Qtr 3	2009 Qtr 4	Project	Task Complete Last Report	Task Complete This Report	Project Complete
Task 1: Zenon 1000 pilot demonstration								12	20	10	10
Task 2: Toray low energy membrane demonstration		Complete						10	0	0	10
Task 3: Koch low energy membrane demonstration		Complete						10	0	0	10
Task 4: Hydranautics low energy membrane demonstration		Complete						10	0	0	10
Task 5: Dow-FILMTEC hybrid membrane demonstration		Complete						10	0	0	10
Task 6: TorayTM800C low energy membrane demonstration (re-test)		Complete						10	0	0	10
Task 7: DOW FILMTEC high Boron rejection memb. demonstration				Complete				10	100		10
Task 8: Koch high rejection memb. demonstration		Canceled						0	0	0	0
Task 9: Unbalanced PX high recovery testing								15	20	30	15
Task 10: Interstage-PX hybrid high recovery testing		Canceled						0	0	0	0
Task 11: Demonstrate OPT's APX pump and energy recovery system		Canceled						0	0	0	0
Task 12: Amiad Fiber Filter Test								8	20	20	7
Show Progress by Use of Bar Chart	**Scheduled =**							95			92
	Completed =										

Notes: 1. Since we have been operating significantly under budget, we have received approval to add tasks 6, 7, 8, 11 and 12 to the task list. These additional items will extend the project schedule from the current December 2008 end date through Feb- 2010. The additional tasks and subsequent extension to the schedule will not result in an increase to the State Share/grant ie. no cost extension.

Schedule

ADC Actual "As Tested" Project Schedule

ID	Task Name	Duration	Start	Finish
1	Agreement development	168 days	Tue 8/1/06	Thu 3/22/07
2	Final agreement signed	5 days	Fri 3/23/07	Thu 3/29/07
3	Project begins	1 day	Mon 4/2/07	Mon 4/2/07
4	**TorayTM800C low energy membrane demonstration**	**51 days**	**Mon 4/30/07**	**Mon 7/9/07**
5	Install Toray TM800C Membranes	2 days	Mon 4/30/07	Tue 5/1/07
6	TM800C Ripening period	15 days	Wed 5/2/07	Tue 5/22/07
7	TM800C 9 flux and recovery points	18 days	Wed 5/23/07	Fri 6/15/07
8	TM800C Most affordable point	15 days	Mon 6/18/07	Fri 7/6/07
9	Complete Toray TM800C testing	1 day	Mon 7/9/07	Mon 7/9/07
10	Submit project update report to DWR	5 days	Mon 7/9/07	Fri 7/13/07
11	**Koch low energy membrane demonstration**	**88 days**	**Tue 7/10/07**	**Thu 11/8/07**
12	Install membranes	2 days	Tue 7/10/07	Wed 7/11/07
13	Ripening period	20 days	Thu 7/12/07	Wed 8/8/07
14	9 flux and recovery points	30 days	Thu 8/9/07	Wed 9/19/07
15	Most affordable point	35 days	Thu 9/20/07	Wed 11/7/07
16	Complete Koch testing	1 day	Thu 11/8/07	Thu 11/8/07
17	Submit project update report to DWR	5 days	Mon 9/17/07	Fri 9/21/07
18	Innovative PX flow schemes work shop	2 days	Thu 11/8/07	Fri 11/9/07
19	**Hydranautics low energy membrane demonstration**	**78 days**	**Fri 11/9/07**	**Tue 2/26/08**
20	Install membranes	2 days	Fri 11/9/07	Mon 11/12/07
21	Ripening period	20 days	Tue 11/13/07	Mon 12/10/07
22	9 flux and recovery points	25 days	Tue 12/11/07	Mon 1/14/08
23	Most affordable point	30 days	Tue 1/15/08	Mon 2/25/08
24	Complete Hydranautics testing	1 day	Tue 2/26/08	Tue 2/26/08
25	Submit project update report to DWR	4 days	Mon 1/21/08	Thu 1/24/08
26	**Zenon 1000 Pilot Demonstration**	**473 days**	**Mon 3/3/08**	**Wed 12/23/09**
27	Install and test Zenon System	18 days	Mon 3/3/08	Wed 3/26/08
28	Operate and monitor Zenon 1000 membrane pilot system	454 days	Thu 3/27/08	Tue 12/22/09
29	Complete Zenon testing	1 day	Wed 12/23/09	Wed 12/23/09
30	Submit project update report to DWR	4 days	Mon 3/17/08	Thu 3/20/08
31	**DOW Hybrid Membrane Demonstration**	**49 days**	**Wed 2/27/08**	**Mon 5/5/08**
32	Install DOW hybrid membranes	2 days	Wed 2/27/08	Thu 2/28/08
33	DOW Hybrid Ripening period	15 days	Wed 2/27/08	Tue 3/18/08
34	DOW Hybrid 9 flux and recovery points	18 days	Wed 3/19/08	Fri 4/11/08
35	DOW Hybrid Most affordable point	15 days	Mon 4/14/08	Fri 5/2/08
36	Complete DOW testing	1 day	Mon 5/5/08	Mon 5/5/08
37	Submit project update report to DWR	4 days	Mon 6/16/08	Thu 6/19/08

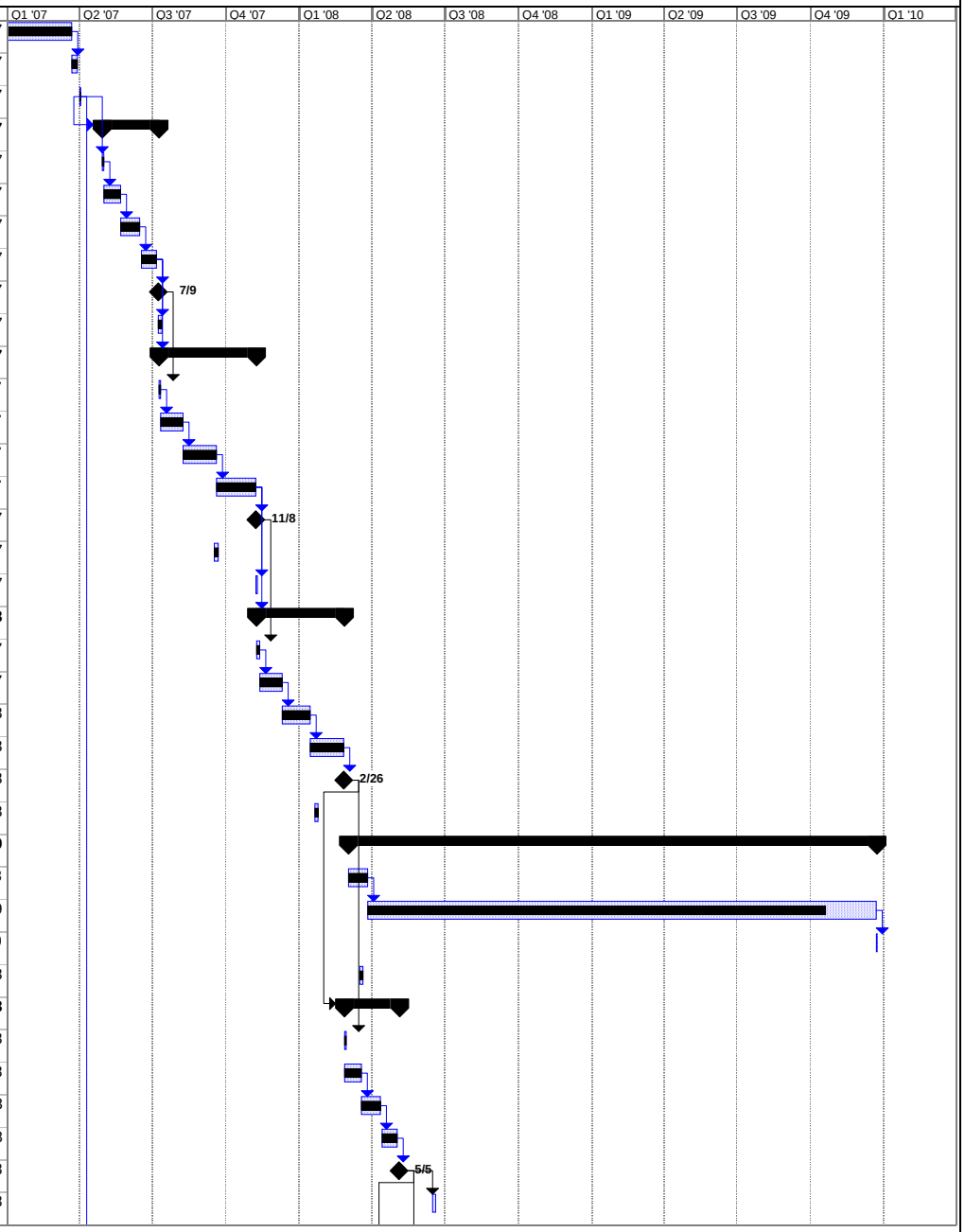

Project: ADC Prop 50 "As Tested" Proj
Date: Tue 7/27/10

Task		Summary		Rolled Up Progress		Project Summary	
Progress		Rolled Up Task		Split		Group By Summary	
Milestone		Rolled Up Milestone		External Tasks		Deadline	

ADC Actual "As Tested" Project Schedule

ID	Task Name	Duration	Start	Finish
38	***TorayTM800C low energy membrane demonstration (re-test)***	***51 days***	***Tue 5/6/08***	***Tue 7/15/08***
39	***Install Toray TM800C Membranes***	***2 days***	***Tue 5/6/08***	***Wed 5/7/08***
40	***TM800C Ripening period***	***15 days***	***Thu 5/8/08***	***Wed 5/28/08***
41	***TM800C 12 flux and recovery points***	***18 days***	***Thu 5/29/08***	***Mon 6/23/08***
42	***TM800C Most affordable point***	***15 days***	***Tue 6/24/08***	***Mon 7/14/08***
43	***Complete Toray TM800C testing***	***1 day***	***Tue 7/15/08***	***Tue 7/15/08***
44	NFESC shutdown due to intake capacity issues	57 days?	Mon 7/14/08	Tue 9/30/08
45	***DOW FILMTEC high Boron rejection memb. demonstration***	***65 days***	***Wed 10/1/08***	***Tue 12/30/08***
46	***Install DOW FILMTEC SW30XHR-400i Membranes***	***2 days***	***Wed 10/1/08***	***Thu 10/2/08***
47	***DOW FILMTEC SW30XHR-400 Ripening period***	***15 days***	***Fri 10/3/08***	***Thu 10/23/08***
48	***DOW FILMTEC SW30XHR-400 12 flux and recovery points***	***30 days***	***Fri 10/24/08***	***Thu 12/4/08***
49	***DOW FILMTEC SW30XHR-400 Most affordable point***	***30 days***	***Wed 11/19/08***	***Tue 12/30/08***
50	***Complete FILMTEC SW30XHR-400 testing***	***1 day***	***Wed 12/10/08***	***Wed 12/10/08***
51	Submit project update report to DWR	4 days	Fri 8/15/08	Wed 8/20/08
52	ADC-AMTA Member workshop and progress report	1 day	Mon 7/14/08	Mon 7/14/08
53	**Unbalanced PX high recovery testing**	**122 days**	**Sat 1/10/09**	**Tue 6/30/09**
54	Install PX flow scheme membrane set	2 days	Sat 1/10/09	Tue 1/13/09
55	Flush and base line membranes	10 days	Wed 1/14/09	Tue 1/27/09
56	Execute unbalance test protocol @ 18 points (mixing issues)	51 days	Fri 2/13/09	Fri 4/24/09
57	Execute unbalance test protocol @ 11 points (second set)	22 days	Wed 4/29/09	Thu 5/28/09
58	PX unbalanced most affordable point (24/7 for 1 months)	22 days	Fri 5/29/09	Mon 6/29/09
59	Complete Unbalanced PX testing	1 day	Tue 6/30/09	Tue 6/30/09
60	Submit project update report to DWR	4 days	Thu 1/15/09	Tue 1/20/09
61	Submit project update report to DWR	4 days	Mon 3/16/09	Thu 3/19/09
62	Submit project update report to DWR	4 days	Mon 6/15/09	Thu 6/18/09
63	***Demonstrate Amiad Fiber Filter Test***	***205 days***	***Mon 3/2/09***	***Fri 12/11/09***
64	***Install fiber filter unit***	***10 days***	***Mon 3/2/09***	***Fri 3/13/09***
65	***Operate system through "break-in and shakedown" period***	***20 days***	***Mon 3/16/09***	***Fri 4/10/09***
66	***Demonstrate Amiad technology 24/5***	***160 days***	***Mon 4/13/09***	***Fri 11/20/09***
67	***Complete Fiber Filter demonstration***	***15 days***	***Mon 11/23/09***	***Fri 12/11/09***
68	Submit project update report to DWR	4 days	Mon 8/17/09	Thu 8/20/09
69	Complete ADC Prop 50 testing	1 day	Mon 12/14/09	Mon 12/14/09
70	Write final report	30 days	Mon 12/14/09	Fri 1/22/10
71	Submit final report, billing, conclude project	2 days	Mon 1/25/10	Tue 1/26/10
72	Member/general workshop and publish results	2 days	Wed 1/27/10	Thu 1/28/10
73	Project Duration	743 days	Tue 4/3/07	Thu 2/4/10
74		1 day?	Tue 8/1/06	Tue 8/1/06

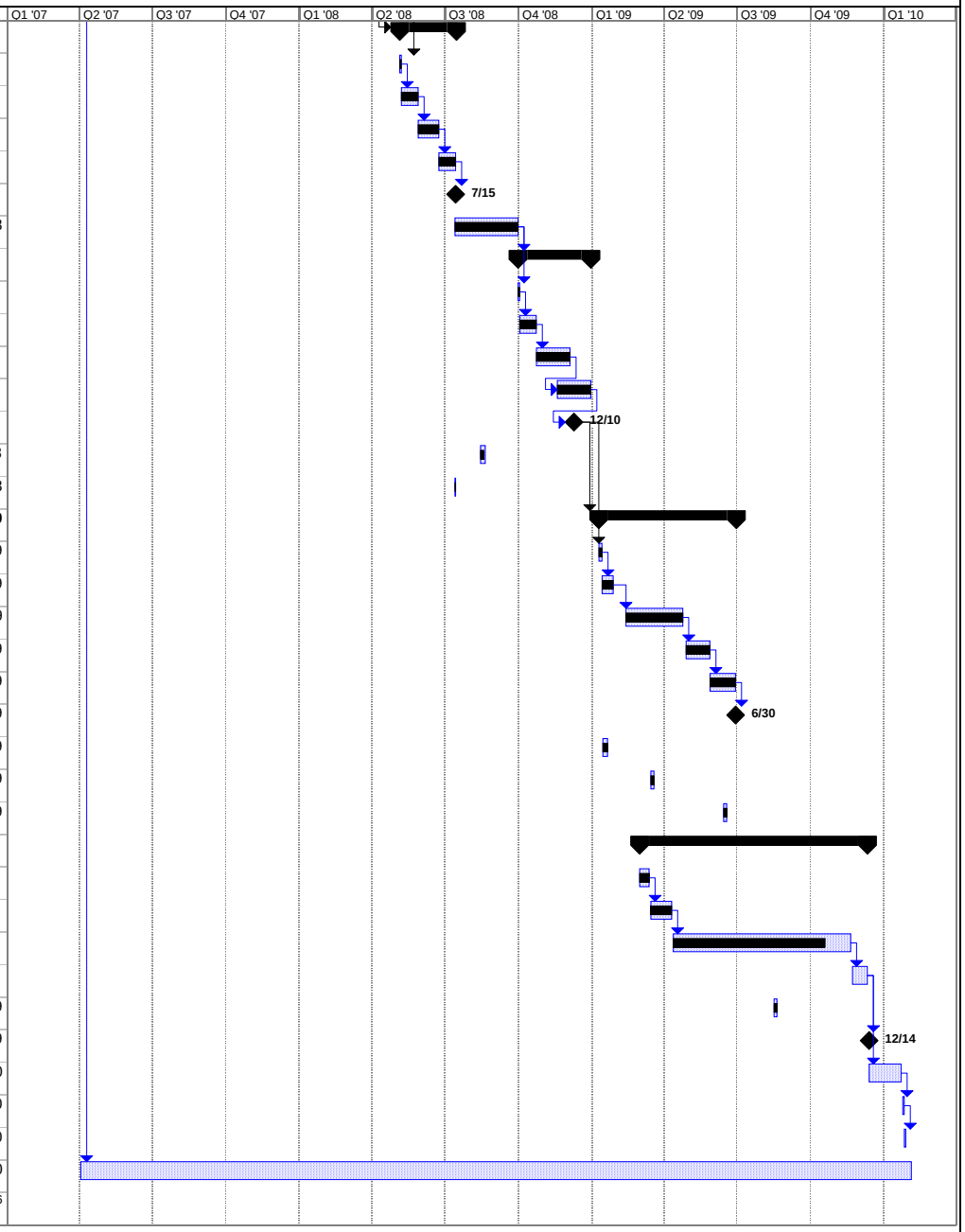

Project: ADC Prop 50 "As Tested" Proj
Date: Tue 7/27/10

Task		Summary		Rolled Up Progress		Project Summary	
Progress		Rolled Up Task		Split		Group By Summary	
Milestone		Rolled Up Milestone		External Tasks		Deadline	

Attachments

1. Water Quality, Flow and Pressure and Power Data
2. Amiad Test Data
3. Published papers and literature

TIME				CALCULATED PARAMETERS			TEMP	PRESSURES										FLOWS				MAIN PANEL KW METER				VFD KW METER			
		Operation	System	RO	Flux	Power		P_{MF-in}	P_{MF-out}	P_{CF-in}	P_{CF-out}	$P_{PX-Feed\ In}$	$P_{PX-conc\ out}$	$P_{PX-boost\ suct}$	P_{F-SYS}	P_{C-SYS}	P_{P-SYS}	$Q_{F-HP\ Pump}$	$Q_{PX\ Pump}$	$Q_{Feed\ PX-In}$	Q_{P-SYS}	A_{sys}	P HP/PX	P booster	Power	PX power	HP Power	Feed Pump	
Date	Time	Time	Recovery %	Recovery %	Gfd	kWh/m3	Influent	(psi)	(psi)	(psi)	(psi)	(psi)	(psi)	(psi)	(psi)	(psi)	(psi)	(gpm)	(gpm)	(gpm)	(gpm)	amp	(kw)	(kw)	Factor	(kw)	(kw)	(kw)	Notes
MM/DD/YY	hh:mm	hh.hh					Temp F	1	2	3	4	5	6	7	8	9	10	11	12	13	14	15	16	17	18	19	20	21	
PX Unbalanced High Recovery Test - Hydranautics SWC5 Membranes											**Membrane Ripening Period**																		
01/30/09	10:04	9895.34	41.7%	43.2%	7.53	1.75	59.0	36.7	35.8	34.9	30.8	29.8	21.4	750	769	760	2.5	45.0	57.64	61.29	43.9	23.77	17.46	nd	0.878	0.95	15.7	3.95	bl
02/02/09	9:30	9966.77	42.7%	43.2%	7.53	1.77	58.0	37.1	36.3	35.5	30.9	29.9	22.1	755	775	761	2.6	46.0	57.72	58.86	43.9	23.83	17.67	nd	0.876	1.12	15.7	3.91	bl
02/03/09	10:25	9991.7	42.6%	43.2%	7.53	1.77	59.0	37.1	36.2	35.3	30.9	29.7	22.1	750	770	760	2.5	46.0	57.75	59.13	43.9	23.77	17.64	nd	0.877	1.08	15.7	3.89	bl
02/04/09	10:15	10015.51	45.0%	45.9%	7.51	1.79	58.0	37.1	36.3	35.8	31.0	29.9	23.0	777	795	785	2.7	46.0	51.65	53.48	43.8	24.42	17.84	nd	0.879	0.75	16.3	3.72	bl
02/05/09	10:20	10039.61	45.3%	45.6%	7.53	1.80	58.0	37.3	36.9	36.0	31.1	29.9	23.6	776	796	783	3.0	46.0	52.41	53.03	43.9	24.31	17.94	nd	0.883	0.88	16.3	3.85	bl
02/06/09	9:41	10062.97	45.1%	45.8%	7.53	1.79	58.0	38.1	37.3	36.7	31.2	30.1	23.8	770	785	779	3.1	46.0	52.04	53.36	43.9	24.08	17.83	nd	0.879	0.89	16.2	3.8	bl
02/09/09	12:06	10077.79	51.1%	45.6%	7.51	1.92	56.0	36.5	35.9	35.2	31.1	30.2	26.1	842	860	852	3.3	46.0	52.33	41.88	43.8	25.49	19.11	nd	0.886	0.74	17.7	3.31	bl
02/10/09	9:49	10099.51	56.3%	45.7%	7.49	2.13	56.0	36.0	35.4	34.9	31.1	30.3	27.6	925	944	939	3.3	46.0	51.82	33.96	43.7	27.86	21.09	nd	0.898	0.94	19.5	3.07	bl
02/11/09	0:43	10119.26	61.0%	45.9%	7.53	2.40	56.0	35.2	34.8	34.5	30.9	30.2	28.1	1041	1060	1057	3.2	46.0	51.77	28.02	43.9	31.27	23.95	nd	0.904	1.08	22.3	2.98	bl
02/23/09	10:16	10207.39	66.4%	45.6%	7.51	2.77	58.0	33.7	33.1	32.8	29.9	29.8	28.1	1210	1225	1220	2.4	46.0	52.22	22.13	43.8	36.11	27.54	nd	0.919	0.84	25.8	2.77	bl
02/20/09	9:55	10183.51	40.7%	40.6%	7.51	1.81	57.0	38.8	37.8	36.9	31.2	30.0	21.5	761	783	778	3.0	46.0	64.07	63.78	43.8	24.19	18.01	nd	0.888	1.10	16.0	4.18	bl
02/24/09	9:53	10231.01	45.6%	40.7%	7.51	1.94	57.0	37.2	36.4	35.7	31.0	30.0	23.8	822	842	835	3.0	46.0	63.86	52.18	43.8	25.36	19.33	nd	0.901	1.12	17.3	3.74	bl
02/25/09	9:50	10254.96	51.0%	40.6%	7.49	2.13	58.0	35.9	35.2	34.7	30.5	29.9	25.8	908	928	920	2.9	46.0	63.91	41.93	43.7	28.09	21.11	nd	0.894	1.13	19.1	3.31	bl
02/26/09	10:21	10279.48	55.9%	40.4%	7.47	2.31	57.0	35.5	34.9	34.4	30.6	30.1	27.1	985	1005	999	3.0	46.0	64.26	34.38	43.6	30.34	22.87	nd	0.903	1.18	20.8	3.08	bl
02/27/09	10:06	10303.22	61.1%	40.5%	7.53	2.54	58.0	34.9	34.3	33.9	30.1	29.9	27.6	1082	1105	1099	2.6	46.0	64.38	27.93	43.9	33.31	25.31	nd	0.908	1.19	22.9	2.95	bl
03/02/09	10:35	10321.6	51.0%	50.9%	7.53	2.04	58.0	36.3	35.7	35.0	30.7	30.0	26.1	917	922	920	2.8	46.0	42.42	42.22	43.9	27.42	20.38	nd	0.890	0.45	19.1	3.35	bl
03/03/09	9:15	10344.27	56.3%	51.1%	7.53	2.19	58.0	35.8	35.1	34.5	30.5	30.0	27.2	980	990	982	2.7	46.0	42.06	34.12	43.9	29.02	21.82	nd	0.895	0.45	20.5	3.1	bl
03/04/09	9:20	10368.34	61.3%	51.0%	7.49	2.38	58.0	35.2	34.8	34.2	30.3	30.1	28.0	1061	1075	1065	2.7	46.0	41.98	27.55	43.7	31.14	23.66	nd	0.901	0.45	22.3	2.95	bl
03/05/09	9:19	10392.33	66.4%	51.0%	7.51	2.66	56.0	35.5	35.1	34.8	30.6	30.0	28.8	1182	1198	1188	2.3	46.0	42.15	22.21	43.8	34.76	26.45	nd	0.906	0.45	25.1	2.85	bl
03/06/09	10:18	10417.31	56.0%	56.1%	7.53	2.23	57.0	36.8	36.3	35.8	30.7	30.1	27.3	1010	1020	1015	2.8	46.0	34.32	34.48	43.9	29.69	22.28	nd	0.899	0.30	21.2	3.25	bl
03/09/09	10:48	10437.3	61.4%	55.8%	7.49	2.45	57.0	36.1	35.7	35.2	30.6	30.1	28.2	1101	1110	1104	3.1	46.0	34.62	27.52	43.7	31.91	24.31	nd	0.902	0.27	23.2	3.04	bl
03/10/09	11:36	10462.11	66.0%	55.9%	7.49	2.68	58.0	36.8	35.3	34.9	30.2	30.0	28.6	1195	1200	1198	2.8	46.0	34.52	22.48	43.7	34.98	26.55	nd	0.911	0.30	25.3	2.93	bl
03/11/09	9:32	10484.05	61.0%	61.4%	7.49	2.61	56.0	36.9	36.3	35.9	30.8	30.2	28.2	1175	1180	1178	3.2	46.0	27.52	27.95	43.7	34.16	25.86	nd	0.908	0.19	24.8	3.09	bl
03/12/09	10:06	10508.62	45.5%	45.5%	7.49	1.95	56.0	39.1	38.2	37.4	31.1	30.1	24.0	858	870	860	2.9	46.0	52.42	52.28	43.7	26.07	19.38	nd	0.883	0.63	18.0	3.91	bl
03/16/09	10:06	10522.06	42.0%	41.9%	8.97	1.98	57.0	41.8	40.2	39.0	31.9	29.9	19.2	838	862	850	4.4	54.0	72.46	72.23	52.3	30.96	23.52	nd	0.902	1.58	20.9	5.27	bl
03/20/09	9:35	10552.21	40.3%	40.2%	8.97	1.97	58.0	42.3	40.9	39.7	31.9	29.9	17.9	817	845	830	4.2	54.0	77.65	77.33	52.3	30.88	23.41	nd	0.904	1.94	20.5	5.47	bl
03/23/09	10:14	10568.3	45.6%	40.4%	8.98	2.09	56.0	40.8	39.6	38.5	31.8	30.0	21.9	878	903	890	4.4	54.0	77.15	62.45	52.4	32.74	24.89	nd	0.910	1.90	21.9	4.75	bl
03/25/09	9:28	10595.17	50.7%	40.4%	8.98	2.27	56.0	39.8	38.8	37.9	31.1	29.9	24.1	950	980	962	4.2	55.0	77.31	50.91	52.4	35.38	27.02	nd	0.917	1.97	24.2	4.35	bl
03/26/09	9:30	10619.2	55.8%	40.4%	8.95	2.49	56.0	39.2	38.4	37.8	30.9	29.9	25.8	1040	1068	1059	4.0	54.0	77.11	41.27	52.2	38.48	29.46	nd	0.921	1.99	26.4	3.85	bl
03/27/09	9:33	10643.25	61.1%	40.4%	9.00	2.70	58.0	39.2	38.7	38.1	30.3	29.9	26.5	1140	1170	1159	3.8	54.5	77.32	33.45	52.5	41.86	32.14	nd	0.924	2.02	29.1	3.73	bl
03/31/09	9:50	10667.95	45.7%	45.7%	7.53	1.92	58.0	40.3	39.5	38.9	31.0	30.0	23.6	838	855	841	2.9	46.0	52.16	52.23	43.9	25.77	19.11	nd	0.886	0.88	17.5	4.18	bl
04/02/09	9:30	10697.49	45.6%	45.6%	9.02	2.01	59.0	42.2	41.1	40.1	31.2	29.9	21.8	871	898	881	4.1	54.0	62.78	62.65	52.6	31.17	23.97	nd	0.921	1.13	22.0	5.01	bl
04/03/09	9:14	10721.21	50.7%	45.4%	8.98	2.13	59.0	42.0	41.0	40.1	31.1	29.9	24.1	923	945	939	4.0	54.0	62.92	51.02	52.4	33.39	25.34	nd	0.911	1.12	23.3	4.55	bl
04/07/09	9:16	10746.34	55.7%	45.4%	8.97	2.33	58.0	40.5	39.8	39.0	30.8	29.9	25.9	1018	1039	1024	3.9	54.0	62.97	41.62	52.3	36.89	27.71	nd	0.916	1.16	25.6	4.04	bl
04/08/09	9:34	10770.03	61.1%	45.5%	9.00	2.60	59.0	40.5	39.9	39.2	30.5	29.9	27.2	1137	1159	1141	4.0	55.0	62.99	33.36	52.5	40.65	30.95	nd	0.921	1.15	28.8	3.86	bl
04/09/09	10:05	10794.56	45.5%	45.5%	7.49	1.93	57.0	42.7	41.9	41.0	31.1	30.1	24.0	849	862	859	3.0	46.0	52.24	52.35	43.7	25.91	19.19	nd	0.882	0.76	17.8	4.36	bl
04/10/09	10:04	10818.54	50.6%	50.5%	8.97	2.14	58.0	43.2	42.3	41.5	30.9	29.9	23.9	958	975	961	3.8	54.0	51.24	51.03	52.3	33.32	25.44	nd	0.909	0.81	23.9	4.73	bl
04/14/09	10:23	10846.48	56.0%	50.6%	9.00	2.31	58.0	41.7	40.9	40.1	30.8	30.0	26.0	1035	1045	1040	4.1	54.0	51.33	41.24	52.5	36.41	27.53	nd	0.914	0.82	26.0	4.18	bl
04/16/09	9:47	10883.89	61.1%	50.5%	9.00	2.55	56.0	41.8	41.0	40.4	30.9	30.0	27.5	1140	1159	1148	4.2	55.0	51.41	33.48	52.5	39.70	30.36	nd	0.918	0.84	28.7	4.07	bl
04/17/09	10:02	10908.14	45.7%	45.5%	7.51	1.99	57.0	43.2	42.3	41.8	31.1	30.0	24.1	878	895	880	3.1	46.0	52.36	52.04	43.8	26.51	19.75	nd	0.883	0.79	18.3	4.43	bl
04/21/09	9:06	10929.9	55.9%	55.7%	8.98	2.34	58.0	41.1	40.3	39.8	30.1	29.3	25.8	1062	1078	1067	3.3	55.0	41.62	41.38	52.4	37.16	27.88	nd	0.914	0.48	26.5	4.2	bl
04/22/09	9:33	10954.35	60.9%	55.7%	9.00	2.56	57.0	42.1	41.5	40.9	30.5	29.9	27.2	1155	1165	1159	3.8	55.0	41.72	33.68	52.5	40.24	30.51	nd	0.919	0.48	29.1	4.05	bl
04/23/09	10:07	10978.92	45.6%	45.6%	7.53	1.97	57.0	44.9	44.1	43.3	31.0	30.0	24.1	868	882	878	2.9	46.0	52.37	52.42	43.9	26.32	19.65	nd	0.884	0.76	18.2	4.8	bl
04/24/09	8:46	11001.57	61.1%	60.9%	8.98	2.60	58.0	45.2	44.6	44.0	30.5	29.9	27.2	1185	1200	1192	3.9	55.0	33.65	33.43	52.4	40.62	30.97	nd	0.917	0.30	29.6	4.45	bl
04/29/09	9:27	11049.71	45.6%	45.5%	7.51	1.94	56.0	46.2	45.3	44.7	31.1	30.0	23.9	855	867	860	3.6	46.0	52.42	52.28	43.8	26.03	19.31	nd	0.885	0.88	17.3	4.86	bl
04/30/09	10:10	11074.27	50.8%	45.5%	7.49	2.06	57.0	45.1	44.4	43.8	30.9	30.1	25.9	905	922	918	3.7	46.0	52.29	42.37	43.7	27.34	20.47	nd	0.892	0.85	19.0	4.55	bl
05/01/09	9:36	11092.98	56.1%	45.7%	7.51	2.25	58.0	44.3	43.9	43.2	30.2	29.9	27.0	998	1015	1001	2.6	46.0	51.98	34.28	43.8	29.67	22.36	nd	0.901	0.86	20.9	4.1	bl
05/05/09	9:26	11118.78	61.2%	45.6%	7.49	2.51	58.0	43.5	43.0	42.6	30.1	29.8	27.9	1101	1120	1110	4.6	46.0	52.12	27.65	43.7	32.97	24.91	nd	0.906	0.51	23.3	3.89	bl
05/06/09	7:53	11141.23	66.1%	45.3%	7.44	2.81	56.0	44.0	43.8	43.2	30.1	30.0	28.4	1235	1242	1239	4.5	46.0	52.36	22.21	43.4	36.53	27.67	nd	0.909	0.95	26.1	3.82	bl
05/07/09	9:32	11166.89	45.8%	45.7%	7.53	2.00	57.0	48.1	47.2	46.6	30.8	29.9	23.9	879	897	882	3.1	46.0	52.21	52.05	43.9	27.09	19.93	nd	0.888	0.87	18.4	5.18	bl
05/08/09	12:10	11193.46	46.7%	50.2%	7.47	2.06	57.0	48.0	47.2	46.5	30.5	29.8	24.2	918	930	920	5.0	46.0	43.26	49.70	43.6	27.39	20.40	nd	0.891	0.50	18.9	5.2	bv, unbalanced to adjust PX mixing ie. s
05/12/09	9:26	11279.15	55.9%	51.0%	7.53	2.20	60.0	48.0	47.5	47.0	30.1	29.9	26.9	980	998	985	5.5	46.0	42.19	34.64	43.9	29.34	21.92	nd	0.897	0.45	20.6	4.64	bl
05/13/09	8:55	11302.65	61.1%	50.8%	7.49	2.43	60.0	49.3	48.9	48.5	30.0	29.9	27.5	1083	1099	1088	4.9	46.0	42.27	27.84	43.7	32.09	24.12	nd	0.903	0.50	22.7	4.65	bl
05/18/09	10:06	11353.85	45.7%	45.6%	7.51	1.90	64.0	53.1	52.2	51.6	30.8	29.9	23.2	830	845	839	4.9	46.0	52.28	52.05	43.8	25.83	18.91	nd	0.882	0.75	17.4	5.88	bl
05/20/09	10:10	11378.47	48.5%	55.9%	7.51	2.14	60.0	49.0	48.2	47.7	30.5	29.9	25.1	968	979	970	5.2	46.5	34.57	46.52	43.8	28.14	21.29	nd	0.909	0.37	20.2	5.08	bv, unbalanced to adjust PX mixing ie. s
05/21/09	10:10	11402.29	61.3%	56.2%	7.49	2.43	60.0	46.5	46.1	45.7	29.9	29.8	27.6	1100	1107	1101	4.7	46.5	34.11	27.54	43.7	31.61	24.12	nd	0.917	0.37	22.9	4.29	bl

TIME				CALCULATED PARAMETERS			TEMP	PRESSURES										FLOWS				MAIN PANEL KW METER				VFD KW METER			
		Operation	System	RO	Flux	Power		$P_{MF\text{-}in}$	$P_{MF\text{-}out}$	$P_{CF\text{-}in}$	$P_{CF\text{-}out}$	$P_{PX\text{-}Feed\ In}$	$P_{PX\text{-}conc\ out}$	$P_{PX\text{-}boost\ suct}$	$P_{F\text{-}SYS}$	$P_{C\text{-}SYS}$	$P_{P\text{-}SYS}$	$Q_{F\text{-}HP\ Pump}$	$Q_{PX\ Pump}$	$Q_{Feed\ PX\text{-}In}$	$Q_{P\text{-}SYS}$	A_{sys}	P HP/PX	P booster	Power	PX power	HP Power	Feed Pump	
Date	Time	Time	Recovery %	Recovery %	Gfd	kWh/m3	Influent	(psi)	(psi)	(psi)	(psi)	(psi)	(psi)	(psi)	(psi)	(psi)	(psi)	(gpm)	(gpm)	(gpm)	(gpm)	amp	(kw)	(kw)	Factor	(kw)	(kw)	(kw)	Notes
MM/DD/YY	hh:mm	hh.hh					Temp F	1	2	3	4	5	6	7	8	9	10	11	12	13	14	15	16	17	18	19	20	21	
05/22/09	9:53	11426.19	45.7%	45.7%	7.53	1.98	60.0	53.0	52.1	51.3	31.0	30.0	24.0	870	885	879	5.4	46.5	52.22	52.26	43.9	26.10	19.72	nd	0.903	0.72	17.9	5.85	bl
05/25/09	10:40	11498.97	46.5%	60.9%	7.47	2.37	61.0	55.0	54.1	53.4	28.3	27.0	22.0	1075	1080	1078	5.2	46.5	27.95	50.18	43.6	30.76	23.44	nd	0.911	0.22	22.4	6.1	bv, unbalanced to adjust PX mixing ie. s
05/28/09	9:04	11534.43	45.7%	45.7%	7.49	1.97	60.0	52.5	51.5	50.9	30.8	29.9	23.9	859	877	862	3.1	47.0	51.92	51.86	43.7	25.69	19.52	nd	0.898	0.78	18.0	5.73	bl
05/29/09	11:02	11558.51	61.3%	45.6%	7.47	2.50	60.0	32.1	31.5	31.1	30.0	29.9	28.0	1099	1115	1101	5.1	46.5	52.11	27.56	43.6	32.31	24.71	nd	0.912	0.78	22.9	2.67	bl
06/01/09	10:13	11629.68	61.0%	45.6%	7.49	2.53	60.0	32.1	31.8	31.2	30.0	29.9	27.7	1102	1120	1110	5.1	47.0	52.16	27.91	43.7	32.69	25.11	nd	0.917	0.80	23.4	2.71	bl
06/02/09	9:53	11653.34	61.2%	45.6%	7.49	2.53	60.0	32.1	31.7	31.2	30.0	29.9	27.6	1104	1121	1115	5.1	48.0	52.04	27.74	43.7	32.86	25.07	nd	0.918	0.78	23.3	2.73	bl
06/03/09	9:45	11677.20	61.3%	45.7%	7.47	2.51	60.0	32.0	31.6	31.1	29.9	29.8	27.5	1099	1117	1101	5.0	48.0	51.78	27.48	43.6	32.51	24.84	nd	0.914	0.75	23.1	2.74	bl
06/04/09	8:30	11698.37	61.1%	45.8%	7.51	2.51	60.0	32.1	31.7	31.1	30.0	29.9	27.8	1100	1120	1105	5.2	48.0	51.88	27.86	43.8	32.39	24.97	nd	0.916	0.78	23.3	2.72	bl
06/05/09	8:58	11722.83	61.0%	45.8%	7.51	2.51	61.0	32.0	31.7	31.1	30.0	29.9	27.7	1101	1120	1107	5.2	48.0	51.84	28.05	43.8	32.79	25.01	nd	0.915	0.80	23.3	2.73	bl
06/08/09	9:20	11795.22	61.2%	45.6%	7.53	2.49	62.0	32.1	31.5	31.1	29.8	29.8	27.4	1100	1117	1101	5.0	48.0	52.36	27.84	43.9	32.63	24.85	nd	0.917	0.82	23.2	2.75	bl
06/09/09	9:43	11819.58	61.4%	45.5%	7.51	2.51	62.0	32.2	31.9	31.3	30.0	29.9	27.6	1100	1120	1103	5.2	48.0	52.43	27.57	43.8	32.71	24.98	nd	0.916	0.78	23.3	2.75	bl
06/10/09	9:33	11843.42	60.9%	45.7%	7.51	2.52	62.0	32.1	31.8	31.1	29.8	29.6	27.5	1101	1120	1110	5.0	48.0	52.05	28.13	43.8	32.47	25.04	nd	0.917	0.75	23.4	2.8	bl
06/11/09	8:46	11862.30	61.4%	45.7%	7.49	2.53	62.0	32.1	31.7	31.1	29.9	29.9	27.5	1101	1120	1107	5.1	48.0	52.02	27.44	43.7	32.48	25.09	nd	0.915	0.78	23.3	2.75	bl
06/12/09	9:25	11886.91	61.3%	45.5%	7.49	2.51	62.0	32.3	31.9	31.3	29.9	29.9	27.6	1102	1120	1110	5.1	48.0	52.25	27.63	43.7	32.47	24.94	nd	0.919	0.80	23.4	2.83	bl
06/15/09	8:45	11958.28	61.3%	45.5%	7.51	2.52	62.0	32.6	32.0	31.7	29.9	29.9	27.5	1101	1120	1110	5.1	48.0	52.41	27.63	43.8	32.68	25.09	nd	0.919	0.75	23.3	2.85	bl
06/16/09	15:05	11987.80	60.8%	45.9%	7.51	2.48	63.0	32.0	31.5	31.0	29.0	29.0	27.0	1085	1105	1095	4.6	48.0	51.65	28.21	43.8	32.51	24.63	nd	0.921	0.80	23.2	2.75	bv
06/17/09	14:15	12011.00	61.1%	45.3%	7.46	2.52	63.0	32.0	31.4	31.0	29.0	29.3	27.0	1100	1120	1110	4.5	48.0	52.49	27.73	43.5	32.88	24.87	nd	0.918	0.90	23.2	2.9	bv
06/18/09	10:40	12031.39	61.3%	45.9%	7.53	2.49	63.0	32.0	31.5	31.0	29.5	29.2	27.2	1105	1125	1115	5.2	48.0	51.82	27.68	43.9	32.84	24.87	nd	0.924	0.80	23.3	2.7	bv
06/22/09	8:52	12125.60	61.2%	45.8%	7.51	2.56	61.0	32.1	31.7	31.1	29.9	29.8	27.6	1120	1138	1123	3.1	50.0	51.78	27.74	43.8	33.29	25.44	nd	0.919	0.75	23.7	2.77	bl
06/24/09	9:31	12149.96	61.4%	45.7%	7.51	2.56	61.0	32.2	31.8	31.2	29.9	29.8	27.7	1119	1139	1123	5.1	49.5	51.97	27.55	43.8	33.71	25.42	nd	0.909	0.78	23.8	2.75	bl
06/25/09	9:32	12173.97	61.4%	45.6%	7.51	2.54	62.0	32.3	31.9	31.3	30.0	29.9	27.8	1115	1125	1119	5.2	50.0	52.18	27.53	43.8	33.33	25.23	nd	0.911	0.80	23.5	2.73	bl
06/26/09	14:35	12203.02	61.1%	45.8%	7.49	2.53	62.0	32.0	31.3	31.0	29.5	29.5	27.4	1110	1125	1119	4.6	50.0	51.77	27.78	43.7	33.31	25.15	nd	0.911	0.77	23.4	2.85	bl
06/29/09	9:50	12270.27	61.3%	45.7%	7.49	2.55	62.0	32.3	31.9	31.3	29.9	29.9	27.7	1118	1131	1120	5.1	50.0	51.96	27.57	43.7	33.20	25.29	nd	0.909	0.80	23.7	2.87	bl
06/30/09	8:50	12293.27	61.2%	45.7%	7.49	2.54	62.0	32.5	31.9	31.3	30.0	29.9	27.7	1107	1123	1117	5.1	50.0	51.85	27.65	43.7	33.38	25.16	nd	0.908	0.75	23.4	2.77	bl
07/01/09	7:30	12315.95	61.2%	45.6%	7.51	2.56	60.0	32.7	32.1	31.6	30.0	29.9	27.8	1120	1140	1125	5.1	50.0	52.19	27.74	43.8	33.41	25.45	nd	0.909	0.78	23.3	2.8	bl

Water Quality Data

TIME			pH			CONDUCTIVITY						TDS							TURBIDITY		SDI	BORON			OTHER					
			pH			Conductivity (mS/cm)						TDS (mg/L)							Turbidity (NTU)		Density Index	Boron (mg/L)				Inhibitor Pump			FEED VFD	
Date	Time	Operation Time	$pH_{F\text{-}sys}$	$pH_{P\text{-}sys}$	$pH_{C\text{-}sys}$	$C_{CF\text{-}out}$	$C_{F\text{-}PX\text{-}out}$	$C_{F\text{-}sys}$	$C_{P\text{-}sys}$	$C_{C\text{-}sys}$	$C_{C\text{-}PX\text{-}out}$	$TDS_{CF\text{-}out}$	$TDS_{F\text{-}PX\text{-}out}$	PX % Inc	$TDS_{F\text{-}sys}$	$TDS_{P\text{-}sys}$	$TDS_{C\text{-}sys}$	$TDS_{C\text{-}PX\text{-}out}$	$NTU_{MF\text{-}in}$	$NTU_{CF\text{-}out}$	$SDI_{CF\text{-}out}$	$B_{\text{-concentrate}}$	$B_{F\text{-}sys}$	$B_{P\text{-}sys}$	V_{TANK}	Speed	HP VFD Speed	PX VFD Speed	Speed	Notes
MM/DD/YY	hh:mm	hh.hh	SC5	SC11	SC6	SC3	SC4	SC5	SC11	SC6	SC7	SC3	SC4		SC5	SC11	SC6	SC7	CART	meter	CART		SC5	SC11	(gallons)	(gph)	(Hertz)	(Hertz)	(Hertz)	
PX Unbalanced High Recovery Test - Hydranautics SWC5 Membranes												**Membrane Ripening Period**																		
01/30/09	10:52	9896.15	7.78	6.21	7.62	50.61	52.99	51.84	258.5	83.81	81.72	32.48	34.16	5.2%	33.36	122.60	60.09	58.05	1.989	0.029	2.1			nd	nd	nd	45.09	34.54	55.45	bl
02/02/09	9:55	9967.19	7.82	6.30	7.68	50.15	54.06	51.74	247.2	82.44	81.58	32.22	34.93	8.4%	33.35	117.40	58.84	57.98	1.289	0.035	2.1			nd	nd	nd	45.12	36.37	55.74	bl
02/03/09	10:55	9992.19	7.85	6.28	7.66	50.22	54.05	51.59	249.6	82.93	81.85	32.21	34.96	8.5%	33.25	118.70	59.26	58.29	1.041	0.035	2.2			nd	nd	nd	45.12	35.92	55.45	bl
02/04/09	10:45	10016.02	7.87	6.29	7.68	50.35	54.35	51.78	268.6	86.58	84.61	32.36	35.21	8.8%	33.37	127.90	62.57	60.76	1.032	0.034	2.4			0.83	nd	nd	45.12	32.23	54.75	bl
02/05/09	10:49	10040.48	7.88	6.28	7.68	50.49	55.38	52.11	261.9	85.99	84.89	32.47	36.08	11.1%	33.63	124.70	62.04	61.01	1.797	0.036	2.3			nd	nd	nd	45.15	33.46	54.91	bl
02/06/09	10:12	10063.47	7.85	6.34	7.68	50.02	54.96	51.61	254.9	85.52	84.38	32.16	35.76	11.2%	33.25	121.30	61.63	60.56	3.180	0.034	2.4			0.83	nd	nd	45.17	33.49	55.16	bl
02/09/09	12:34	10078.26	7.83	6.17	7.64	50.18	60.39	53.59	320.9	93.29	92.69	32.27	40.25	24.7%	34.69	153.70	68.69	68.09	2.217	0.029	2			0.88	nd	nd	45.15	30.03	52.94	bl
02/10/09	10:14	10099.91	7.74	5.93	7.52	50.37	70.44	56.95	337.8	100.5	100.4	32.38	48.41	49.5%	37.35	161.90	75.21	75.08	4.930	0.026	1.7			nd	nd	nd	45.17	30.91	51.83	bl
02/11/09	10:34	10119.78	7.72	5.77	7.45	50.45	80.95	61.15	372.4	109.2	109.1	32.44	57.59	77.5%	40.81	178.70	83.11	82.99	2.949	0.024	1.8	9.8	5.4	0.96	nd	nd	45.72	31.35	51.22	bl
02/23/09	10:40	10207.79	7.59	5.79	7.34	49.93	93.08	65.19	513.4	119.2	119.4	32.05	68.46	113.6%	44.09	247.80	92.07	92.18	2.841	0.032	2.8	10.0	5.8	1.10	nd	nd	45.91	31.23	50.25	bl
02/20/09	10:24	10183.99	7.71	6.11	7.56	49.81	52.08	50.81	270.3	80.75	79.17	31.94	33.56	5.1%	32.67	128.50	57.27	55.81	5.005	0.030	2.2	7.1	4.5	0.79	nd	nd	45.03	36.15	56.58	bl
02/24/09	10:22	10231.49	7.71	6.04	7.53	50.21	57.79	53.42	287.5	85.16	84.92	32.27	38.05	17.9%	34.52	137.10	61.33	61.04	3.142	0.029	2.6	7.5	4.6	0.83	nd	nd	45.15	36.42	55.24	bl
02/25/09	10:19	10255.44	7.82	5.99	7.46	50.39	67.06	56.78	329.1	93.49	93.29	32.38	45.65	41.0%	37.19	157.50	68.84	68.62	6.570	0.030	2.8	8.3	4.7	0.92	nd	nd	45.14	36.16	52.78	bl
02/26/09	10:54	10280.03	7.67	5.91	7.47	50.41	76.69	60.13	376.8	100.8	100.6	32.41	53.69	65.7%	39.97	180.90	75.44	75.26	3.664	0.031	2.6	8.9	5.3	1.00	nd	nd	45.12	36.86	51.72	bl
02/27/09	10:35	10303.71	7.65	5.82	7.43	50.39	86.21	64.65	425.2	109.1	108.9	32.41	62.24	92.0%	43.66	204.50	82.94	82.67	3.406	0.030	2.5	9.6	5.4	1.10	nd	nd	45.64	36.88	51.12	bl
03/02/09	11:09	10322.16	7.63	5.88	7.43	50.37	57.62	52.87	349.4	96.26	93.19	32.39	37.93	17.1%	34.16	167.40	71.31	68.52	2.124	0.030	2.4	8.5	4.6	0.91	nd	nd	45.41	26.31	53.22	bl, PX mixing issues
03/03/09	9:55	10394.94	7.64	5.87	7.41	50.43	65.47	55.27	388.1	102.4	101.3	32.39	44.38	37.0%	36.01	186.40	76.92	75.89	2.401	0.029	2.4	9.2	5.2	0.97	nd	nd	45.41	26.31	51.98	bl
03/04/09	9:58	10368.98	7.63	5.81	7.36	50.19	75.26	58.67	441.5	109.9	109.7	32.25	52.41	62.5%	38.76	212.50	83.79	83.41	3.244	0.030	2.7	10.0	5.2	1.10	nd	nd	45.39	26.31	51.25	bl
03/05/09	9:50	10392.84	7.65	5.76	7.34	50.17	86.36	63.39	490.4	118.5	118.3	32.24	62.44	93.7%	42.65	236.80	91.55	91.21	2.775	0.039	2.7	11.0	5.5	1.10	nd	nd	45.67	26.25	50.99	bl
03/06/09	11:31	10418.53	7.57	5.84	7.37	50.42	60.39	53.54	371.6	105.5	100.4	32.41	40.19	24.0%	34.64	178.30	79.78		3.497	0.038	2.7	9.6	4.8	0.97	nd	nd	45.46	22.41	52.72	bl, PX mixing issues
03/09/09	11:13	10437.73	7.64	5.83	7.36	49.34	68.01	55.08	459.3	110.7	107.8	31.67	46.54	47.0%	35.85	221.50	84.41	81.76	3.818	0.031	3.1			nd	nd	nd	45.47	21.94	52.29	bl
03/10/09	12:25	10462.93	7.67	5.74	7.37	49.23	76.63	58.75	485.7	115.5	114.5	31.57	53.74	70.2%	38.87	234.50	88.82	87.79	3.402	0.032	3.3			nd	nd	nd	45.88	22.68	51.62	bl
03/11/09	10:11	10484.69	7.66	5.71	7.31	49.31	64.15	53.89	452.9	116.2	106.3	31.64	43.29	36.8%	34.91	218.30	89.39	80.44	2.361	0.032	3.1			nd	nd	nd	45.91	18.72	52.14	bl, PX mixing issues
03/12/09	10:33	10509.08	7.69	5.99	7.52	49.29	52.57	50.39	270.8	86.05	83.11	31.61	33.98	7.5%	32.43	129.00	62.13	59.38	2.562	0.031	3.6			nd	nd	nd	45.35	30.09	55.81	bl
03/16/09	8:09	10522.54	7.78	5.98	7.62	49.26	51.56	50.03	242.1	81.07	79.62	31.60	33.25	5.2%	32.16	114.90	57.58	56.23	1.145	0.031	3.9	7.4	4.5	0.74	nd	nd	53.82	40.66	60.21	bl
03/20/09	10:05	10552.70	7.73	6.07	7.66	49.34	51.63	50.13	241.5	79.03	78.03	31.66	33.32	5.2%	32.25	114.70	55.78	54.81	2.783	0.031	3.4	7.1	4.6	0.73	nd	nd	53.82	43.59	61.23	bl
03/23/09	10:19	10568.79	7.61	5.74	7.45	49.38	58.31	52.96	260.7	85.14	84.76	31.68	38.51	21.6%	34.21	124.10	61.28	60.91	2.783	0.031	3.1	8.4	4.7	0.77	nd	nd	53.82	43.24	58.45	bl
03/25/09	9:57	10595.56	7.56	5.71	7.43	49.28	65.34	56.03	279.1	90.92	90.79	31.63	44.19	39.7%	36.59	133.10	66.52	66.34	1.703	0.031	2.9	9.3	5.1	0.82	nd	nd	54.25	43.65	57.45	bl
03/26/09	9:58	10619.67	7.61	5.67	7.42	49.37	75.15	59.56	326.6	99.12	98.88	31.69	52.32	65.1%	39.51	156.20	73.89	73.66	3.212	0.034	2.8	10.0	5.6	0.90	nd	nd	54.38	43.83	55.73	bl
03/27/09	10:01	10643.72	7.74	5.77	7.48	49.23	84.74	62.49	385.4	107.3	107.1	31.58	60.89	92.8%	41.87	184.80	81.32	81.02	1.445	0.031	2.6	8.0	5.9	1.00	nd	nd	54.69	44.03	55.32	bl
03/31/09	10:22	10668.48	7.73	6.02	7.54	49.21	52.81	50.32	319.1	85.82	83.16	31.55	34.11	8.1%	32.37	152.60	61.89	59.44	1.012	0.032	3.5	7.8	4.7	0.90	nd	nd	45.47	30.62	57.09	bl
04/02/09	10:01	10697.99	7.81	6.11	7.59	49.29	52.77	50.63	274.3	85.89	83.71	31.62	34.11	7.9%	32.58	130.70	61.97	59.92	1.064	0.031	2.8	7.8	4.5	0.79	nd	nd	54.39	36.31	59.97	bl
04/03/09	10:02	21.99	7.76	5.99	7.56	49.41	58.81	52.38	292.8	90.95	90.62	31.71	38.93	22.8%	33.84	139.80	66.63	66.19	3.601	0.029	2.5	8.3	4.9	0.85	nd	nd	54.38	36.15	58.41	bl
04/07/09	9:47	10746.86	7.74	5.86	7.39	49.32	68.82	55.81	333.7	98.46	98.36	31.64	47.07	48.8%	36.42	159.80	73.36	73.18	1.785	0.030	2.2	9.3	5.2	0.92	nd	nd	54.38	36.42	56.55	bl
04/08/09	10:06	10770.57	7.65	5.73	7.42	49.41	79.81	62.64	387.9	107.3	107.6	31.70	56.62	78.6%	42.03	186.50	81.61	81.56	3.032	0.028	2.3	10.0	5.5	1.00	nd	nd	54.62	36.42	55.98	bl
04/09/09	10:32	10795.00	7.62	5.79	7.44	49.36	52.97	50.61	283.3	87.01	84.07	31.64	34.23	8.2%	32.56	135.10	62.94	60.26	2.236	0.030	2.1	8.2	4.6	0.87	nd	nd	45.09	30.27	57.97	bl
04/10/09	10:30	10818.98	7.64	5.75	7.43	49.38	53.96	51.14	271.8	93.24	90.15	31.68	34.94	10.3%	32.94	129.40	68.62	65.81	2.375	0.030	2.3	8.5	4.7	0.82	nd	nd	54.19	30.53	59.35	bl, PX mixing issues
04/14/09	10:57	10847.05	7.59	5.69	7.38	49.51	62.74	53.76	318.1	100.4	99.82	31.78	42.08	32.4%	34.81	152.20	75.16	74.47	2.279	0.029	2.6	9.3	4.9	0.88	nd	nd	54.48	30.43	57.26	bl
04/16/09	10:14	10884.35	7.52	5.57	7.29	49.54	73.02	57.71	341.5	107.9	107.6	31.81	50.54	58.9%	37.98	163.70	81.93	81.60	2.138	0.027	2.4	10.0	5.4	0.94	nd	nd	54.44	30.88	57.06	bl
04/17/09	10:30	10908.61	7.53	5.62	7.37	49.56	53.76	51.33	262.7	87.07	83.97	31.82	34.77	9.3%	33.07	125.20	63.01	60.18	2.139	0.032	1.9	7.9	4.7	0.84	nd	nd	45.11	30.59	58.38	bl
04/21/09	9:44	10930.53	7.55	5.64	7.39	49.17	59.11	52.41	319.8	102.8	99.16	31.42	39.01	24.2%	33.81	152.60	77.25	73.89	2.664	0.029	2.3	9.4	4.7	0.91	nd	nd	54.38	26.82	57.46	bl, PX mixing issues
04/22/09	10:00	10954.79	7.53	5.53	7.26	49.52	67.82	55.58	346.9	110.3	108.7	31.75	46.26	45.7%	36.23	166.10	84.06	82.58	2.003	0.030	2.2	11.0	5.0	0.95	nd	nd	54.84	26.67	57.12	bl
04/23/09	10:33	10979.34	7.66	5.98	7.49	49.48	53.61	51.09	279.8	86.93	83.88	31.74	34.66	9.2%	32.88	133.40	62.92	60.08	1.664	0.031	3	8.2	4.5	0.89	nd	nd	45.32	30.35	59.97	bl
04/24/09	9:17	11002.09	7.67	5.84	7.36	49.57	62.81	54.26	369.1	114.1	108.1	31.83	42.17	32.5%	35.16	177.10	87.51	82.02	1.776	0.031	3.7	11.0	4.9	0.98	nd	nd	54.49	22.76	58.97	bl, PX mixing issues
04/29/09	9:55	11050.18	7.82	6.33	7.62	49.55	53.55	50.91	307.1	86.65	83.88	31.81	34.64	8.9%	32.79	146.70	62.67	60.11	1.614	0.031	4.1	7.8	4.4	0.86	nd	nd	45.32	30.67	60.36	bl
04/30/09	10:42	11074.81	7.79	6.21	7.56	49.57	59.88	52.95	344.1	91.69	90.99	31.83	39.82	25.1%	34.22	164.90	67.22	66.52	1.749	0.029	4.3	8.3	4.7	0.93	nd	nd	45.32	30.50	59.17	bl
05/01/09	10:07	11093.51	7.72	6.01	7.47	49.51	69.13	56.42	386.7	99.26	99.08	31.77	47.36	49.1%	36.92	185.50	74.02	73.79	2.614	0.030	3.9	9.0	5.0	0.99	nd	nd	45.29	30.53	57.79	bl
05/05/09	9:55	11119.27	7.61	5.85	7.37	49.42	79.86	60.69	450.8	107.3	107.2	31.71	56.49	78.1%	40.37	217.10	81.36	81.25	2.368	0.030	3.3	9.9	5.6	1.10	nd	nd	45.53	31.11	56.94	bl
05/06/09	8:22	11141.72	7.51	5.69	7.26	49.44	89.95	66.56	488.2	115.6	115.4	31.73	65.63	106.8%	45.21	235.40	88.81	88.62	2.823	0.030	3.2	11.0	5.8	1.20	nd	nd	45.51	31.35	56.98	bl
05/07/09	10:00	11167.35	7.57	5.86	7.39	49.51	54.19	51.43	286.1	87.26	83.96	31.76	35.09	10.5%	33.13	136.30	63.18	60.19	3.956	0.030	2.6	7.9	4.7	0.88	nd	nd	45.49	30.65	61.53	bl
05/08/09	12:20	11193.61	7.49	6.64	7.41	49.57	54.25	51.17	310.5	91.95	85.74	31.83	35.14	10.4%	32.95	148.00	67.42	61.67	3.898	0.030	2.6	8.5	4.7	0.93	nd	nd	45.47	27.23	62.03	bv, simulated 7-10% PX mixing
05/12/09	10:01	11279.73	7.85	6.26	7.59	49.42	62.58	53.85	403.1	99.32	97.64	31.71	41.98	32.4%	34.85	193.60	74.06	72.54	1.891	0.030	4.2	9.1	4.9	1.00	nd	nd	45.46	26.57	60.27	bl
05/13/09	9:28	11303.19	7.81	6.11	7.53	49.38	74.05	57.53	469.8	107.2	106.9	31.68	51.34	62.1%	37.83	226.30	81.27	80.98	2.362	0.029	3.8	10.0	5.5	1.20	nd	nd	45.44	27.28	61.04	bl
05/18/09	11:10	11354.91	8.06	7.19	7.82	49.52	53.19	50.76	381.5	86.06	83.65	31.81	34.42	8.2%	32.73	183.20	62.19	59.89	1.216	0.034	2.7	7.9	4.8	1.00	nd	nd	45.48	30.85	64.93	bl
05/20/09	10:38	11379.93	7.81	6.18	7.52	49.43	54.36	51.16	402.9	98.74	87.41	31.71	35.29	11.3%	32.94	193.50	73.54	63.32	2.429	0.032	3.7	9.3	4.8	1.10	nd	nd	45.46	23.23	61.75	bl
05/21/09	10:44	11403.04	7.66	5.93	7.36	49.16	67.41	56.52	460.5	108.2	105.9	31.54	45.88	45.5%	36.98	221.70	82.25	80.12	2.306	0.032	2.3	10.0	5.2	1.20	nd	nd	45.41	23.17	59.11	bl

Water Quality Data

TIME			pH			CONDUCTIVITY						TDS							TURBIDITY		SDI	BORON			OTHER					
			pH			Conductivity (mS/cm)						TDS (mg/L)							Turbidity (NTU)		Density Index	Boron (mg/L)				Inhibitor Pump			FEED VFD	
Date	Time	Operation Time	$pH_{F\text{-}sys}$	$pH_{P\text{-}sys}$	$pH_{C\text{-}sys}$	$C_{CF\text{-}out}$	$C_{F\text{-}PX\text{-}out}$	$C_{F\text{-}sys}$	$C_{P\text{-}sys}$	$C_{C\text{-}sys}$	$C_{C\text{-}PX\text{-}out}$	$TDS_{CF\text{-}out}$	$TDS_{F\text{-}PX\text{-}out}$	PX % Inc	$TDS_{F\text{-}sys}$	$TDS_{P\text{-}sys}$	$TDS_{C\text{-}sys}$	$TDS_{C\text{-}PX\text{-}out}$	$NTU_{MF\text{-}in}$	$NTU_{CF\text{-}out}$	$SDI_{CF\text{-}out}$	$B_{\text{-}concentrate}$	$B_{F\text{-}sys}$	$B_{P\text{-}sys}$	V_{TANK}	Speed	HP VFD Speed	PX VFD Speed	Speed	Notes
MM/DD/YY	hh:mm	hh.hh	SC5	SC11	SC6	SC3	SC4	SC5	SC11	SC6	SC7	SC3	SC4		SC5	SC11	SC6	SC7	CART	meter	CART		SC5	SC11	(gallons)	(gph)	(Hertz)	(Hertz)	(Hertz)	
05/22/09	10:33	11426.85	7.69	6.06	7.48	49.42	54.14	50.95	307.7	87.09	83.59	31.72	35.07	10.6%	32.81	147.10	63.07	59.83	2.223	0.032	2.2	8.1	4.8	0.94	nd	nd	45.49	30.91	64.62	bl
05/25/09	11:10	11499.49	7.76	5.98	7.41	49.41	54.96	51.38	460.7	108.3	83.92	31.71	35.76	12.8%	33.12	221.90	82.41	60.16	1.391	0.031	2.1	10.0	4.8	1.10	nd	nd	45.44	19.54	66.00	bl
05/28/09	9:35	11534.96	7.67	5.99	7.48	49.42	54.31	51.14	321.3	86.79	83.79	31.71	35.19	11.0%	32.94	153.70	62.81	60.01	1.757	0.032	2.1	7.9	4.8	0.96	nd	nd	45.47	31.06	64.55	bl
05/29/09	11:32	11559.00	7.65	5.89	7.41	49.39	77.71	59.43	439.7	105.3	105.1	31.66	54.58	72.4%	39.36	211.60	79.52	79.34	2.335	0.048	1.7	9.8	5.5	1.10	nd	nd	45.44	31.26	49.95	bl
06/01/08	10:43	11630.18	7.61	5.79	7.39	49.43	78.59	59.45	421	106.4	106.3	31.71	55.42	74.8%	39.39	202.40	80.53	80.47	2.111	0.045	1.7	nd	nd	nd	nd	nd	45.79	31.73	49.59	bl
06/02/09	10:18	11653.76	7.65	5.78	7.41	49.36	78.55	58.51	423.7	106.6	106.5	31.65	55.41	75.1%	38.62	203.80	80.68	80.53	1.905	0.045	1.8	nd	nd	nd	nd	nd	45.80	31.67	49.66	bl
06/03/09	10:23	11677.84	7.67	5.81	7.41	49.39	78.69	60.18	430.1	106.2	106.1	31.68	55.51	75.2%	40.01	206.80	80.43	80.25	2.151	0.046	2.2	9.5	5.4	1.1	nd	nd	45.79	31.71	49.66	bl
06/04/09	9:02	11698.92	7.68	5.88	7.42	49.36	78.28	61.71	464.1	106.3	106.1	31.67	55.11	74.0%	41.24	223.70	80.45	80.22	2.012	0.047	2.4	nd	nd	nd	nd	nd	45.80	31.29	49.72	bl
06/05/02	9:27	11723.33	7.62	5.81	7.39	49.31	78.86	60.26	446.7	106.4	106.5	31.61	55.62	76.0%	40.04	215.10	80.67	80.59	2.237	0.034	2.5	nd	nd	nd	nd	nd	45.81	31.46	49.66	bl
06/08/09	9:50	11795.71	7.66	5.92	7.44	49.21	78.93	59.96	476.7	105.8	106	31.56	55.67	76.4%	39.81	229.90	80.19	80.12	1.713	0.032	2.6	nd	nd	nd	nd	nd	45.79	32.17	50.18	bl
06/09/09	10:21	11820.23	7.72	5.89	7.46	49.29	78.96	60.73	453.7	106.4	106.2	31.62	55.79	76.4%	40.45	218.50	80.49	80.33	3.155	0.032	2.5	nd	nd	nd	nd	nd	45.81	32.08	49.85	bl
06/10/09	10:03	11843.92	7.69	5.86	7.44	49.22	78.36	58.09	438.1	106.1	106.1	31.56	55.23	75.0%	38.29	210.70	80.36	80.24	2.663	0.031	2.3	nd	nd	nd	nd	nd	45.79	31.76	50.11	bl
06/11/09	9:15	11862.78	7.72	5.90	7.47	49.27	79.11	61.15	480.6	106.5	106.5	31.61	55.91	76.9%	40.79	231.80	80.71	80.61	1.693	0.031	2.3	nd	nd	nd	nd	nd	45.79	31.63	49.84	bl
06/12/09	9:57	11887.47	7.66	5.85	7.43	49.34	79.03	61.59	455.2	106.4	106.4	31.65	55.75	76.1%	41.15	219.20	80.71	80.53	2.244	0.041	2.1	nd	nd	nd	nd	nd	45.79	31.64	50.22	bl
06/15/09	9:26	11658.88	7.69	5.87	7.48	49.31	79.19	60.16	455.6	106.6	106.6	31.61	55.94	77.0%	39.97	219.30	80.75	80.63	1.643	0.063	2.5	nd	nd	nd	nd	nd	45.79	31.93	50.32	bl
06/16/09	14:50	11987.56	7.81	6.64	7.56	49.12	78.04	58.04	476.5	105.5	105.2	31.72	54.86	73.0%	38.23	229.70	79.76	79.44	2.153	0.047	3.2	nd	nd	nd	nd	nd	45.79	31.85	50.23	bv
06/17/09	14:25	12011.13	7.80	6.17	7.53	49.16	80.06	60.32	482.7	106.9	106.6	31.53	56.67	79.7%	40.08	232.80	80.99	80.64	1.779	0.048	3.3	9.6	5.5	1.1	nd	nd	45.78	32.32	50.01	bv
06/18/09	10:50	12031.56	7.78	6.10	7.50	49.28	79.47	59.48	475.3	106.5	106.1	31.62	56.19	77.7%	39.43	229.20	80.66	80.26	0.048	0.048	3.4	nd	nd	nd	nd	nd	45.79	31.90	50.35	bv
06/22/09	9:24	12126.13	7.65	5.75	7.41	49.23	78.93	59.02	407.5	106.8	106.7	31.53	55.68	76.6%	39.03	195.70	80.95	80.81	2.615	0.031	2.5	9.6	5.3	1.1	nd	nd	45.79	31.64	49.91	bl
06/24/09	10:15	12150.69	7.67	5.81	7.42	49.29	78.85	61.19	445.5	106.5	106.6	31.62	55.61	75.9%	40.84	214.40	80.66	80.72	2.083	0.034	3.2	nd	nd	nd	nd	nd	45.79	31.64	49.75	bl
06/25/09	9:59	12174.42	7.78	5.91	7.51	49.38	78.99	61.29	465.3	106.3	106.2	31.69	55.79	76.0%	40.92	224.30	80.49	80.34	1.587	0.033	2.3	9.5	5.4	1.1	nd	nd	45.81	31.76	49.95	bl
06/26/09	15:12	12203.66	7.75	5.93	7.47	49.16	78.12	61.64	459.6	105.8	105.7	31.54	54.95	74.2%	41.17	221.30	80.03	79.89	3.023	0.037	2.2	nd	nd	nd	nd	nd	45.79	31.73	50.51	bl
06/29/09	10:30	12270.96	7.71	5.88	7.48	49.31	78.11	59.72	437.1	105.9	105.9	31.64	54.98	73.8%	39.62	210.30	80.22	80.11	1.493	0.034	2.4	nd	nd	nd	nd	nd	45.80	31.71	50.71	bl
06/30/09	9:21	12293.79	7.73	5.87	7.47	49.32	78.61	60.71	447.2	106.3	106.2	31.66	55.45	75.1%	40.45	215.30	80.48	80.32	1.346	0.034	2.4	9.6	5.3	1.1	nd	nd	45.79	31.70	50.01	bl
07/01/09	8:00	12316.46	7.68	5.78	7.42	49.36	78.12	60.77	396.4	105.6	105.5	31.65	55.01	73.8%	40.47	190.40	79.86	79.66	2.003	0.034	2	nd	nd	nd	nd	nd	45.82	32.12	50.06	bl

Amiad AMF skid																																			
Date	Time	Hour Meter P1 (hrs)	KW	Temp (F)	Inlet Flow Time for 20 cu.ft (sec)	Inlet Flow Calc'd Flow Rate (gpm)	Inlet Totalizer (cu.ft.)	Intake Flow Magmeter FS-17 (gpm	Flow Meter-SAF Inlet (gpm)	Flow Meter-SAF Inlet Total (gal)	Flow Meter-SAF Outlet (gpm)	Flow Meter-SAF Outlet Total (gal)	Flow Meter-AMF Outlet (gpm)	Flow Meter-AMF Outlet Total (gal)	Outlet Flow Time for 200 gal (sec)	Outlet Flow Calc'd Flow Rate (gpm)	Outlet Totalizer (gal)	Raw Inlet Press (PSI)	AMF Inlet Press (PSI)	AMF Outlet Press (PSI)	Raw Water Turbidity (NTU)	Raw Water pH	Raw Water Cond (mS/cm)	Raw Water Dissolved Oxygen (ppm)	Raw Water Particle Count	Post Strainer Turbidity (NTU)	Post Strainer Particle Count	Filtrate Turbidity (NTU)	Filtrate SDI (15)	Filtrate Particle Count	Raw Water Fluor Chlorophyll A	Filtrate Fluor Chlorophyll A	SAF Flush Counter	AMF Flush Counter	Comments
cartridges																																			
4/2/2009	15:56	3232.80	4.20	nd	52.9	169.7	240370	155	168	30267	161	30093	158	30615	76.4	157.1	21183500	38.1	33.5	30.5	5.09	8.06	53.1	7.5	nd	4.325	nd	0.116	5.22	109509	nd	nd	2	1	
4/3/2009	11:06	3251.90	4.20	nd	54.3	165.3	262050	159	155	182448	151	180204	155	186837	76	157.9	21339700	38.1	34	27	4.86	8.05	54.6	7.8	nd	4.768	nd	0.145	5.36	191951	nd	nd	23	15	
4/6/2009	10:21	3253.50	4.20	nd	57.1	157.2	264010	151	157	197135	152	194080	161	201531	77	155.8	21353700	38	33	28	1.63	7.98	51.2	7.3	nd	1.589	nd	0.079	4.45	121768	34.94	20.62	24	15	
4/8/2009	11:32	3302.50	4.20	nd	54.4	165.0	322950	161	154	610014	149	598702	171	634984	72.2	166.2	21785200	38	35	32.5	3.704	7.97	52.8	6.98	nd	3.354	nd	0.118	4.83	106062	53.73	25.84	46	43	
4/10/2009	11:45	3350.50	4.20	nd	54.1	165.9	381130	154	162	1020482	148	993942	165	1070246	73.5	163.3	22214300	38.2	35	31	3.748	7.89	53.1	6.01	nd	2.985	nd	0.126	5.67	73707	34.02	17.17	60	66	
4/13/2009	9:28	3353.40	4.20	nd	53.6	167.5	384660	157	165	1045727	161	1017551	169	1096315	71.8	167.1	22240000	38	33.5	32.5	2.246	7.87	51.2	6.25	nd	2.189	nd	0.116	4.76	67180	32.66	17.22	61	67	
4/15/2009	9:30	3401.10	4.20	nd	52.9	169.7	441400	158	156	1435672	155	1402376	168	1521343	70.8	169.5	22656000	38	34.5	33.5	4.486	7.9	54.6	6.63	nd	4.329	nd	0.178	5.91	94418	53.11	17.17	120	95	
4/17/2009	11:25	3450.70	3.60	nd	73.5	122.1	487650	116	120	1765857	117	1717281	121	1864456	99.3	120.8	22999700	38	37.5	34	2.893	7.74	52.4	5.7	nd	2.642	nd	0.105	4.02	55774	26.59	8.558	138	111	
4/20/2009	9:41	3511.90	3.40	58	72.4	124.0	545020	116	118	2165697	111	2106253	120	2286328	97	123.7	23426500	38	37	35.5	1.312	7.75	49.7	6.25	nd	1.185	nd	0.061	4.09	70151	38.66	16.18	147	124	
4/22/2009	10:58	3561.00	3.40	56	76.9	116.7	589330	105	111	2485647	106	2410305	118	2616949	103.6	115.8	23758300	38	37.5	33.5	2.241	7.84	52.6	5.91	nd	2.254	nd	0.086	4.2	74299	67.9	18.61	164	141	
4/24/2009	10:10	3608.00	3.30	54	76.8	116.9	632220	103	112	2784835	108	2704750	119	2934775	103.1	116.4	24077500	38	38	34	1.848	7.93	53.1	7.14	nd	1.866	nd	0.104	4.79	109912	163.1	27.36	179	154	
4/27/2009	9:23	3628.20	3.40	54	77.2	116.3	650600	100	113.5	2915007	107	2830853	122	3070500	103.8	115.6	24214700	38	38	37	1.747	7.91	52.9	6.82	nd	1.593	nd	0.097	5.03	72892	162.5	26.47	196	164	
4/29/2009	10:40	3677.20	3.52	54	75.5	118.9	695620	91.7	101.8	3228312	107.2	3137298	123.2	3403577	103	116.5	24551200	38.1	38	30	3.347	7.99	54	8.15	nd	3.128	nd	0.156	5.21	80365	165.8	22.11	226	175	
2 micron cartridges																																			
5/1/2009	10:30	3724.30	2.98	57	113.47	79.1	724365	40.4	73.8	3431689	69.3	3329069	67.8	3612541	150.65	79.7	24767950	38	39	37	2.751	7.98	52.6	7.42	nd	2.747	nd	0.0761	4.7	40050	94.35	16.1	240	182	
5/4/2009	9:49	3795.30	2.87	54	111.8	80.3	767010	39	80.6	3732823	71	3611887	84	3923443	144.2	83.2	25093200	38	39.5	37.5	2.817	7.91	52.1	6.51	nd	2.616	nd	0.089	4.64	45663	39.05	13.4	259	198	
5/6/2009	9:28	3842.60	2.75	56	109.9	81.7	795160	37	76.7	3934231	73	3799453	76.3	4125623	143.3	83.7	25310200	38	39	38.5	4.046	7.65	51.1	4.78	nd	3.908	nd	0.079	4.42	47347	48.19	11.87	273	212	
5/8/2009	11:05	3873.90	3.35	57	75.31	119.2	814700	62.9	119.3	4073051	107.3	3929914	117.3	4265009	100.31	119.6	25469970	38	37.5	37	4.519	7.59	49.3	4.75	nd	4.766	nd	0.106	3.72	79808	27.09	7.52	282	221	
5/15/2009	11:22	3938.90	3.25	56	82.2	109.2	867880	92.6	104	4449047	102	4291064	104	4673250	110.6	108.5	25859400	38	38	36.5	3.138	8.09	52.5	9.58	nd	3.008	nd	0.198	7.82(10)	188148	284.7	44	314	254	
5/19/2009	10:52	3991.50	4.45	59	99.9	89.9	908040	nd	92	4727870	79	4561222	93	4972997	133.1	90.2	26156500	38	39	34.5	3.984	8.05	53.1	8.22	nd	3.827	nd	0.198	7.94(10)	145135	160.2	37.65	462	291	
5/20/2009	11:40	4017.20	5.15	57	65.8	136.4	932910	nd	132	4904777	124	4730479	148	5164417	87.8	136.7	26341800	38	38	29.5	3.609	7.87	51.5	6.64	nd	3.482	nd	0.191	5.84	119907	73.69	29.13	477	311	
5/22/2009	9:10	4059.80	4.95	56	70.2	127.9	965450	nd	126	4947559	116	4947619	130	5409299	91.8	130.7	26586500	38	38.5	35.5	2.815	7.83	52	5.79	nd	2.989	nd	0.192	5.21	92111	47.17	25.03	607	327	
5/25/2009	12:08	4133.90	4.65	58	74.8	120.0	1035140	nd	119	5632198	111	5421867	129	5954677	95.3	125.9	27117100	38	38.5	37.5	1.029	7.81	50.8	6.05	nd	1.027	nd	0.109	4.67	109435	40.77	21.54	690	353	
5/27/2009	9:40	4179.20	4.82	56	73.1	122.8	1077550	nd	112	5931291	108	5708012	127	6285804	95.9	125.1	27440700	38	39	38	2.422	7.79	51.1	5.65	nd	2.122	nd	0.096	4.42	82007	45.55	23.36	743	370	
5/29/2009	12:20	4225.90	4.95	57	73.7	121.8	1120860	nd	120	6237992	112	5998854	140	6624154	94.9	126.4	27771400	38	38.5	37.5	3.163	7.82	51.5	6.2	nd	3.078	nd	0.102	4.58	99205	59.38	29.06	871	392	
6/2/2009	11:38	4255.50	5.10	58	68.4	131.2	1148370	nd	124	6433185	120	6183999	136	6836183	90.2	133.0	27976800	38	38.5	38	2.918	7.8	50.7	5.9	nd	2.686	nd	0.089	4.15	76347	52.95	23.26	987	411	
6/3/2009	11:53	4279.70	4.97	57	68.8	130.5	1172770	nd	126	6605256	122	6349032	134	7025195	91.4	131.3	28160800	38	38.5	36	3.191	7.82	52.3	6.13	nd	3.101	nd	0.106	4.1	70656	63.73	23.55	1011	424	
6/5/2009	10:25	4326.00	4.60	58	70.2	127.9	1219000	nd	124	6931949	119	6659167	135	7389010	90	133.3	28509100	38	38.5	37	2.624	7.83	51.1	6.33	nd	2.564	nd	0.129	4.53	78971	70.63	28.34	1063	448	
6/8/2009	10:45	4398.00	2.40	60	71.2	126.1	1270610	nd	122	7303058	115	7002488	132	7793694	93.5	128.3	28900300	38	38	35.5	2.871	7.92	50.3	7	nd	2.566	nd	0.122	4.98	97030	55.39	24.58	1133	474	
10 micron cartridge																																			
6/12/2009	11:30	4490.60	5.95	58	63.5	141.4	1329410	nd	135	7721296	128	7395767	135	8237076	84	142.9	29341600	38	37.5	35.5	3.734	7.88	50.9	6.35	nd	3.511	nd	0.138	4.86	90865	61.65	24.93	1205	507	
6/15/2009	10:58	4561.80	6.10	59	66.1	135.8	1405700	nd	128	8280055	121	7908912	132	8822125	87.4	137.3	29924400	tc	36.5	34	2.231	7.92	50.7	7.65	nd	2.211	nd	0.105	4.68	77861	79.91	18.57	1241	534	
6/17/2009	15:15	4610.20	5.75	63	67.38	133.2	1455336	128.2	138.5	8645985	117.8	8237792	131	9201269	87.84	136.6	30300000	38	36	34	2.147	8.09	50	9.46	nd	2.287	nd	0.207	5.7	183416	243.7	49.47	1273	563	
6/18/2009	11:15	4630.10	6.00	63	65.1	137.9	1475577	124.7	132.9	8795192	125.1	8371853	133.9	9355200	86.82	138.2	30452940	35.5	32	38	1.826	8.05	50.9	9.17	nd	1.669	nd	0.172	5.51	281637	118.4	41.52	1284	576	
6/22/2009	11:00	4725.40	6.23	61	70.6	127.1	1572530	nd	128	9502055	122	9004021	132	10099054	88.8	135.1	31192100	38	34	33	4.032	7.81	49.9	6.15	nd	3.765	nd	0.092	5.29	79952	35.46	15.29	1340	629	
6/24/2009	11:01	4759.80	5.60	59	66.1	135.8	1608480	nd	132	9764834	116	9236528	132	10375466	84.6	141.8	31470500	38	37.5	34.7	2.123	7.87	50.5	6.7	nd	2.075	nd	0.103	4.73	155009	71.49	34.36	1363	643	
6/30/2009	10:35	4846.90	5.60	59	71.1	126.3	1694700	nd	128	10410598	116	9811974	128	11032110	89.4	134.2	32133700	38	35	30	1.819	7.95	51.9	6.99	nd	1.811	nd	0.108	4.86	175366	71.51	43.05	1543	682	
7/3/2009	10:15	4892.00	5.40	59	69.1	129.9	1726000	nd	132	10654380	119	10025533	133	11271899	88.4	135.7	32374600	38	37	35.5	2.919	7.85	50.9	6.05	nd	2.399	nd	0.129	4.72	91692	40.55	24.21	1581	698	
7/7/2009	10:10	4943.00	5.30	59	67.8	132.4	1775950	nd	138	11042147	124	10365179	135	11653292	88.1	136.2	32759100	38	38	36	2.316	7.83	49.5	6.64	nd	2.262	nd	0.099	4.64	92002	65.78	21.19	1629	726	
7/8/2009	11:30	4964.70	5.35	59	71.4	125.7	1797060	nd	128	11200214	115	10507940	131	11811553	92.5	129.7	32919700	38	38	33.5	2.941	7.94	50.4	7.42	nd	2.826	nd	0.1	4.82	93537	103.8	23.46	1646	739	
7/10/2009	10:45	5001.20	5.40	60	67.1	133.8	1832170	nd	133	11462071	117	10743729	134	12073286	88.1	136.2	33185100	38	38	36.5	3.878	7.99	51.5	8.02	nd	3.741	nd	0.132	5.01	283169	176.3	48.43	1674	765	
7/13/2009	10:50	5009.30	5.75	61	71.9	124.8	1839360	nd	137	11514522	125	10792074	127	12126762	95.4	125.8	33239700	38.1	38.4	31.5	2.319	8.01	50.6	8.17	nd	2.265	nd	0.121	5.04	156060	79.01	20.93	1710	774	
7/15/2009	10:32	5052.90	5.65	60	67.3	133.4	1882310	nd	133	11827322	122	11081243	135	12449461	87.7	136.8	33566800	38.2	38.5	37	1.235	8.03	51.8	7.5	nd	1.175	nd	0.131	5.61	102418	62.04	25.42	1735	796	
7/17/2009	10:29	5086.60	5.60	60	68.3	131.4	1916190	nd	132	12074498	120	11308560	134	12705627	88.6	135.4	33826300	38	38	36	1.244	8.02	51.9	7.1	nd	1.206	nd	0.116	5.64	106710	54.57	26.77	1758	809	
7/20/2009	11:15	5143.70	5.60	60	68.9	130.3	1973770	nd	131	12497524	117	11693451	129	13140449	90.1	133.2	34270200	38	37.5	36	1.772	7.92	51.2	6.37	nd	1.617	nd	0.101	5.21	83784	31.36	21.02	1794	828	
7/22/2009	10:42	5186.20	6.05	61	70.7	127.0	2014990	nd	122	12793306	119	11975592	125	13455620	91.4	131.3	34590400	38	38.5	34	1.282	7.96	51.2	7.09	nd	1.256	nd	0.103	5.25	154292	51.16	31.64	1823	841	
7/24/2009	11:00	5224.80	6.25	60	74.6	120.3	2052500	nd	115	13059159	112	12232384	118	13742790	95.2	126.1	34882300	38	38.5	30.5	1.458	8.08	51.7	7.75	nd	1.442	nd	0.149	5.78	132665	58.77	33.26	1866	854	
7/27/2009	10:55	5285.50	5.65	61	70.5	127.3	2112670	nd	122	13481361	116	12642587	126	14201257	91.8	130.7	35348300	38	38	33	1.126	8.15	52.8	7.93	nd	1.097	nd	0.133	5.56	106784	41.78	26.83	1917	879	
7/30/2009	10:02	5347.60	5.40	61	68.9	130.3	2174020	nd	119	13897858	113	13054774	128	14666770	90.6	132.5	35825800	38	38.5	36	1.156	8.01	51.1	6.96	nd	1.113	nd	0.161	5.89	93031	40.71	22.47	1951	899	
7/31/2009	9:55	5371.40	5.40	61	68.4	131.2	2198100	nd	126	14061263	118	13215295	133	14850060	90.8	132.2	36012700	38	38	35.5	1.093	8.02	50.9	7.08	nd	1.034	nd	0.151	5.61	96952	37.79	22.08	1963	911	
8/5/2009	9:47	5443.10	5.90	60	65.3	137.5	2271320	nd	136	14589560	129	13702459	139	15407925	85.7	140.0	36582700	40	39	37.5	0.907	7.95	50.4	6.13	nd	0.917	nd	0.096	4.77	102043	26.5	20.77	2030	943	
8/6/2009	10:20	5455.60	5.90	60	66.8	134.4	2284600	nd	133	14687780	122	13790607	134	15510034	88.6	135.4	36685700	40	39	35	0.853	7.91	50.7	5.72	nd	0.831	nd	0.085	4.48	89945	20.72	1612	2042	947	
8/7/2009	14:07	5483.30	5.55	61	73.7	121.8	2310990	nd	118	14887458	110	13966761	127	15709734	96.3	124.6	36891000	40	40	38	1.342	7.93	49.7	6.31	nd	1.276	nd	0.068	3.92	72915	19.55	14.84	2056	954	
8/20/2009	10:55	5512.40	4.70	59	82	109.5	2327390	nd	115	15064820	110	14148556	121	15911724	99.5	120.6	37096200	nd	40	32	1.077	8.06	52.4	7.37	nd	1.015	nd	0.136	4.74	93922	110.8	47.92	2211	971	
8/21/2009	9:32	5535.40	4.55	61	77.9	115.2	2346070	nd	124	15222824	109	14293288	119	16072030	100.5	119.4	37259600	nd	33	31.5	1.159	8.01	50.1	7.07	nd	1.045	nd	0.116	4.6	53381	25.16	17.6	2227	977	
8/24/2009	9:50	5607.30	4.05	64	68.34	131.4	2415887	nd	125.8	15740588	110.8	14760709	131.6	16605754	92.43	129.8	37798350	nd	39	35.5	1.076	8.11	51.9	7.44	nd	0.611	nd	0.138	5.53	51511	40.93	20.91	2262	nm	alarm flashing
9/21/2009	10:19	5935.00	5.40	61	90.6	99.1	2602230	nd	104	17103938	92	15936401	114	18012283	110.2	108.9	39220900	41.5	28	25	1.478	8.17	52.7	7.82	nd	1.418	nd	0.154	5.1	105813	93.73	32.93	2988	21	
9/22/2009	7:25	5956.40	5.10	58	78.4	114.5	2621900	nd	116	17260487	102	16068910	122	18161100	101	118.8	39372600	42	38	30.5	1.339	8.13	51.6	7.42	nd	1.222	nd	0.149	4.61	93289	71.41	33.5	3015	28	
9/25/2009	9:29	6029.70	4.65	60	78.8	113.9	2685490	nd	120	17769047	101	16490684	111	18629802	114.3	105.0	39851500	42	29	27	1.163	8.12	50.9	7.73	nd	1.127	nd	0.193	5.13	101983	68.16	25.59	3069	47	

Optimizing Lower Energy Seawater Desalination, The Affordable Desalination Collaboration

Authors: Stephen Dundorf, John MacHarg, Bradley Sessions, Thomas F. Seacord
Presenter: Stephen Dundorf
Environmental Engineer - Bureau of Reclamation - USA

Abstract

Increasing demand for freshwater resources, drought, and the need for a diverse water supply portfolio are among the many reasons that people across the United States and the world are looking to the sea as a potential source. However, in the United States, the high cost of desalination relative to other sources has historically hindered interest in seawater as a possible fresh water supply. Sensitive to the issue of cost as a limitation to realizing large-scale implementation of seawater desalination, engineers, scientists, and the manufacturing industry have worked to reduce both the capital and operating cost associated with desalinated water.

The Affordable Desalination Collaboration (ADC) is a California non-profit organization composed of leading companies and agencies in the desalination industry that have agreed to pool their resources and share their expertise in the mission to realize the affordable desalination of seawater. Using a combination of energy efficient, commercially available RO technologies including pumps, membranes and energy recovery equipment, the ADC has demonstrated that seawater reverse osmosis can produce water at a cost and energy consumption rate comparable to other supply alternatives. The ADC's demonstration scale seawater reverse osmosis treatment plant uses an isobaric energy recovery technology (Pressure Exchanger (PX)) and has a one-pass RO array consisting of three 7-element 8" diameter pressure vessels in parallel. The flux and recovery can be varied from 6-9 gfd and 35-60% respectively. The product capacity of the system can be varied from approximately 50,000-80,000 gpd (200-300 m^3/day). The treatment system has been in use for the past three years at the Navy's Seawater Desalination Test Facility in Port Hueneme, California.

The research to be presented concerns development and testing of innovative process designs that utilize isobaric energy recovery technology. As a result of the PX in particular, there are flow schemes that can increase the recovery of seawater and brackish water systems. The PX operates with the high pressure concentrate boosting the pressure of a portion of the feed flow in an energy recycling process. Under normal operating conditions, there is minimal mixing from the concentrate to the feed flow streams. The unbalanced PX involves decreasing the low pressure system feed flow while maintaining the high pressure concentrate flow through the pressure exchanger. The result is an increased system recovery while the membranes operate at a lower recovery, but at the expense of a higher feed water salinity due to concentrate flow recirculating through the PX (i.e., unbalanced flow). The flow scheme of the "unbalanced PX" has been used to demonstrate recoveries of seawater systems above 50%, while still producing acceptable quality water at low energy consumption and maintaining membrane manufacturer's standard warranties.

Results have shown that at least a 10% increase in system recovery (over 50%) can be achieved with a proportional increase in energy consumption, but at lower overall total treatment costs due to the decrease in pretreatment and capital costs. Optimum operating points for minimum overall cost (capital and O&M) were found at system recovery/RO membrane recovery values of 50/45 and 55/50, along

with other nearby operating points. This resulted in a projected total water cost of \$3.00/kgal (\$0.79/m^3) for a 50 MGD (189,000 m^3/day) seawater desalination plant using media filtration pretreatment. Continuous testing of the unbalanced PX was completed for a period of 1 month to demonstrate the feasibility and reliability of operation with a 60/45 flow regime. Pretreatment using a UF membrane system took the place of media filtration in July 2008 and was used for these high recovery tests. .

The ADC is helping to confirm that as an industry we have achieved the monumental accomplishment of making fresh water from seawater affordable and at acceptable levels of energy consumption when compared to many traditional sources. The challenge that lies before us is to effectively communicate our accomplishment to the appropriate decision makers and applicable stakeholders in our various regions of the world.

DISCLAIMER

Information contained in this report regarding commercial products or firms was supplied by those firms. It may not be used for advertising or promotional purposes and is not to be construed as an endorsement of any product or firm by the Bureau of Reclamation. The information contained in this report was developed for the Bureau of Reclamation; no warranty as to the accuracy, usefulness, or completeness is expressed or implied.

I. INTRODUCTION

Increasing demand for allocated freshwater resources, drought, and the need for a diverse water supply portfolio are among the many reasons that people across the United States and the world are looking to the sea as a potential water supply. Many arid locations around the world, and especially those with lower energy costs, have a substantial history of seawater desalination. However, in the United States where many water source options have been prevalent, the high cost of desalination has hindered interest in seawater as a possible fresh water supply. Sensitive to the issue of cost as a limitation to realizing large scale implementation of seawater desalination, engineers, scientists, and the manufacturing industry have worked over the last fifty years to reduce both the capital and operating cost associated with desalinated water.

The Affordable Desalination Collaboration (ADC) is a California non-profit organization composed of a group of leading companies and agencies in the desalination industry that have agreed to pool their resources and share their expertise in the mission to realize the affordable desalination of seawater. Using a combination of energy efficient, commercially available RO technologies including pumps, membranes and energy recovery equipment, the ADC has demonstrated that seawater reverse osmosis can be used to produce water at an affordable cost and energy consumption rate comparable to other supply alternatives. The research approach and results are made possible through the collaboration of members and participants that include:

- Amiad Filtration Systems
- Bureau of Reclamation
- California Department of Water Resources
- California Energy Commission
- Carollo Engineers
- City of Santa Cruz / Soquel Creek Water District
- FilmTec Corporation
- Hydranautics – Nitto Denko
- Koch Membrane Systems
- Marin Municipal Water District
- Metropolitan Municipal Water District of Southern California
- Municipal Water District of Orange County
- Naval Facilities Engineering Service Center
- New Water Supply Coalition
- Pentair - CodeLine Pressure Vessels
- Poseidon Resources
- San Diego County Water Authority
- Toray Membrane USA
- West Basin Municipal Water District
- Zenon - GE

The ADC's demonstration scale seawater reverse osmosis (SWRO) treatment system uses pressure exchanger technology for energy recovery (**Figure 1.1**). The RO array consists of 3 each x 7 element 8" diameter CodeLine pressure vessel. The flux and recovery can be varied from 6-9 gfd (244-367 L/m^2/d) and 35-60%, respectively. The overall capacity of the system can be varied from approximately 200-300 m^3/day (50,000-80,000 gpd) by changing the recovery and pump speed. The demonstration scale testing is located at the US Navy's Seawater Desalination Test Facility in Port Hueneme, California.

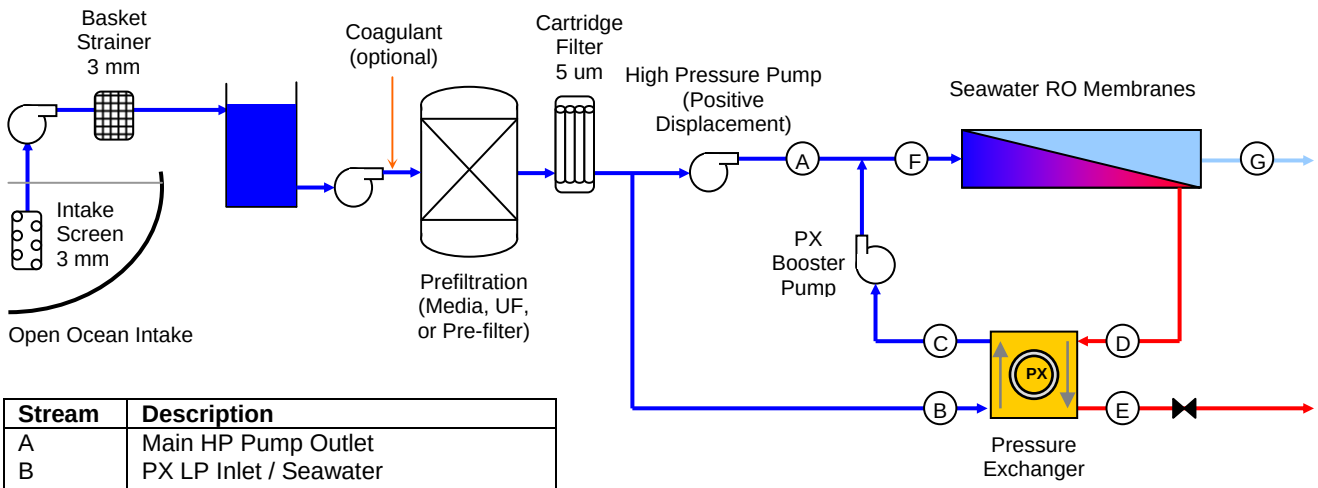

Stream	Description
A	Main HP Pump Outlet
B	PX LP Inlet / Seawater
C	PX HP Outlet / PX Booster pump In
D	PX HP Inlet / RO Concentrate
E	PX LP Outlet / System Concentrate
F	RO Feed Stream
G	RO Permeate

HP = high pressure, LP = low pressure

Figure 1.1 Process flow schematic

The objective of this project is to test a state-of-the-art, energy efficient, demonstration scale SWRO process, designed and built using scalable, commercially available and/or new technologies, in a manner that would provide preliminary information necessary for estimating both capital and operating costs for a 50-MGD seawater desalination plant to supply potable water.

The overall goal of this project is to:

- Improve seawater desalination treatment technologies in terms of cost, energy use, and environmental considerations
- Use the estimated costs generated as a result of this work to further refine the paradigm for engineers, planners, OEMs, membrane manufacturers, and policy makers related to the costs of seawater desalination.

1.1 Phase I

The first phase of testing began in May 2005 and was completed in April 2006. Phase I focused on demonstrating the cost of optimized desalination using a combination of state-of-the-art, commercially available technologies that minimize energy consumption and are typically scalable to 50 MGD (189,000 m^3/day). The positive displacement main high pressure pump is not scalable to 50 MGD, but there are pumps that operate at similar efficiencies that would be used in a 50 MGD facility. Testing included three membrane sets and varying flux and recovery to seek the most cost effective operating point. The most cost effective operating point was estimated by calculating the net present value for each tested condition, accounting for both capital and operating costs. The RO specific energy consumption using the ADC's SWRO process design was demonstrated to range from 6.81 to 8.90 kW-hr/kgal (1.80 to 2.00 kW-hr/m^3) at the most cost effective operating point (i.e., 9 gfd, 50% recovery for the HR membrane and XLE membrane, and 6 gfd, 50% recovery for the HR membrane). The lowest RO process energy consumption, 5.98 kW-hr/kgal (1.58 kW-hr/m^3), was demonstrated using the XLE

membrane at 6 gfd (244 L/m^2/d), 42.5% recovery. Results were presented at the 2006 AMTA biennial conference in Los Angeles, CA [1].

1.2 Phase II

Phase II incorporates Phase I recommendations along with objectives from the California Department of Water Resources (DWR) Proposition 50, a major funding source.

Phase I recommendations incorporated in Phase II include:

- Pretreatment
- System configuration
- Increased recovery research

Relevant California DWR Proposition 50 goals include:

- Opportunities for energy efficiency
- Improved membranes with high salt rejection and less susceptibility to scaling and fouling
- Strategies for brine/concentrate management
- Better feed water pretreatment processes and strategies

Based on Phase I recommendations and Proposition 50 goals, pretreatment specific objectives are as follows:

- Determine optimal design parameters for the system that will generate stable membrane performance.
- Demonstrate that the UF membrane pre-treatment system will produce high quality effluent and meet applicable standards.
- Develop effective cleaning regimes, including type of chemicals and minimum time between cleanings.

The second phase began in August 2007 and includes 3 stages as follows:

1.2.1 Stage 1: Low Energy Membrane Tes*ting & Demonstration* – This included testing and demonstrating three additional manufacturers' membranes using a similar protocol as Phase I. The Phase II typical test protocol included the addition of a 10 gfd flux test (flux rates tested were: 6.0, 7.5, 9.0, 10.0 gfd), elimination of the 35% recovery point, and addition of a 46% recovery point (recoveries test were: 42%, 46%, 50%). Each set of membranes were run through a 12 point approximate eight week test protocol.

In testing membranes from three additional manufacturers the ADC expands the Phase I work and validates that overall low energy numbers can be achieved with elements from more than one commercial membrane supplier. Furthermore, the ADC is able to provide a general matrix of performance, using natural Southern California seawater in a full scale configuration, showing energy consumption, salt rejection, and boron rejection from four leading membrane manufacturers. It should be noted that membrane testing was not performed "side by side" and that there were variations in feed water quality between membrane tests.

Figure 1.2 shows some results from the various membranes tested in Phase I & II. Demonstrating additional membranes has validated our results from Phase I and shown that similar results can be

achieved with all four leading membrane manufactures products. However, raw water quality was not exactly the same between tests so data can not be compared in an absolute fashion.

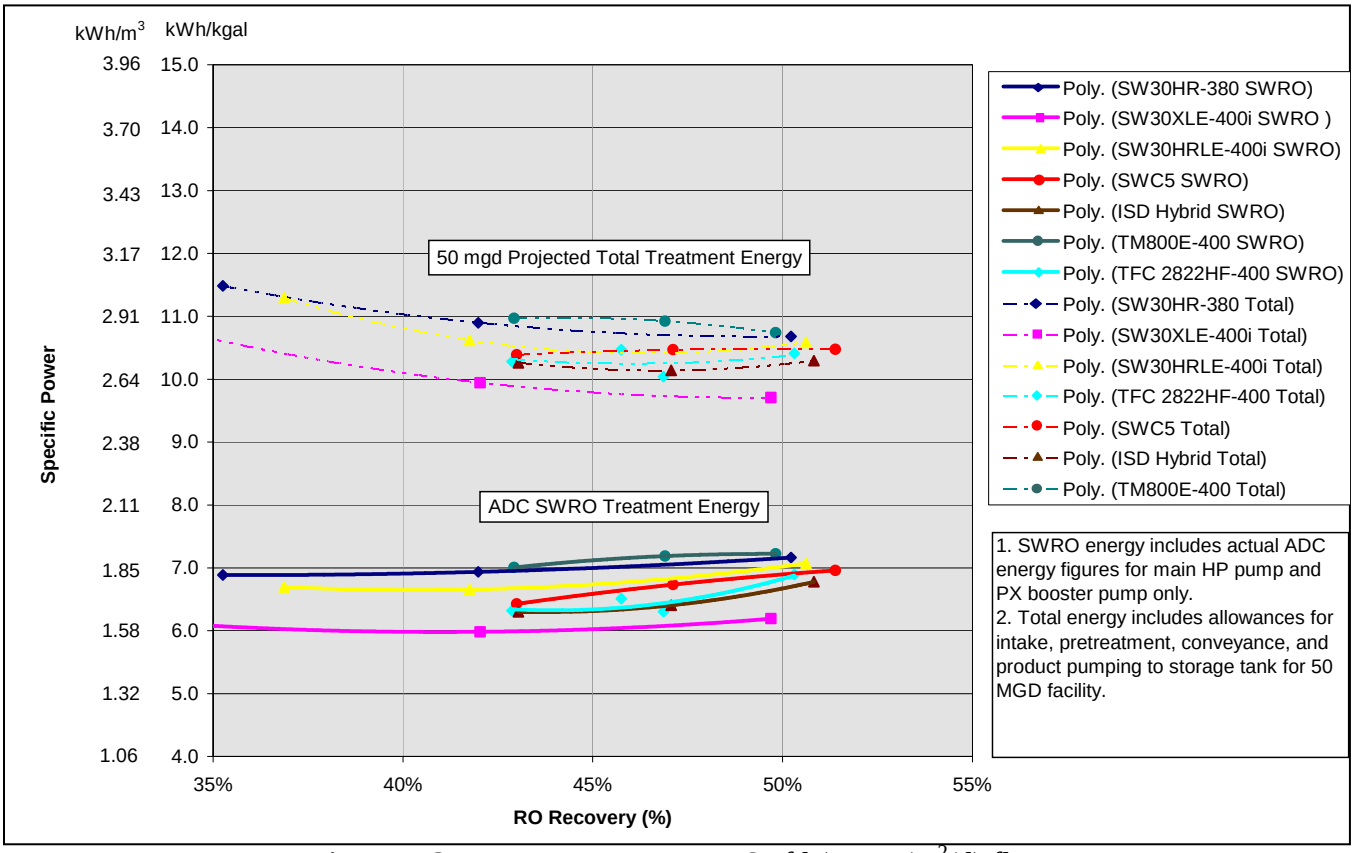

Figure 1.2 Energy vs recovery at 6 gfd (244 L/m^2/d) flux

1.2.2 Stage 2: Staged Membrane Testing - In addition to demonstrating the new commercially available and proven membrane technology described above, we tested a design from one manufacturer, which they are calling their hybrid approach. This concept internally stages membranes of different performance down a single 7 element pressure vessel and seeks to balance the feed water distribution and flux rate from the lead element to the end element. These membranes include both low energy and high rejection membranes with the membranes operated at a higher 55% recovery per manufacturer request. The results show that the extra low energy only membrane tests out perform the hybrid approach except for boron removal which is very close to the absolute 1.45 mg/L California action level limit (**Figure 1.3 & Figure 1.4**) . Both membranes are above the 1.045 ADC most affordable point goal. The hybrid membrane setup does offer some energy savings over higher rejection models and lower total treatment costs at 55% recovery vs. lower recoveries.

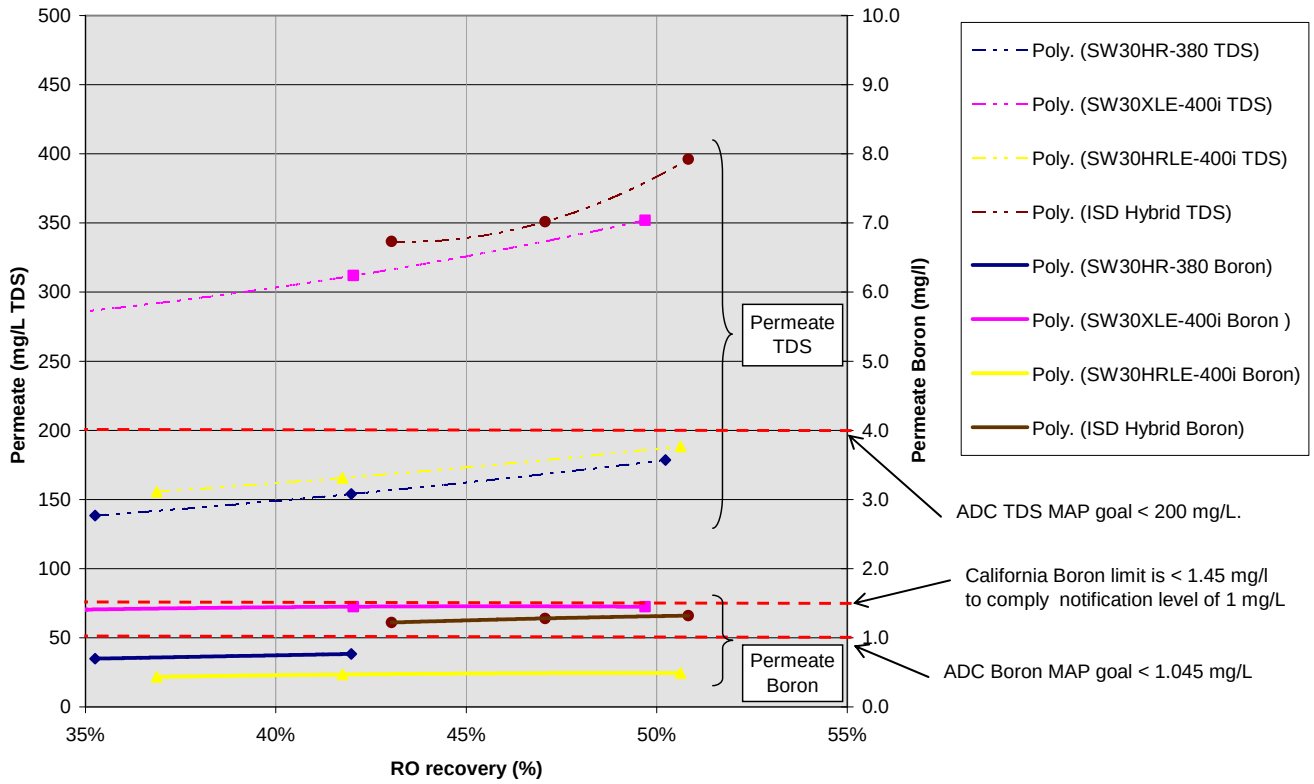

Figure 1.3 Water quality for standard vs hybrid membrane setup at 6 gfd (244 L/m^2/d) flux

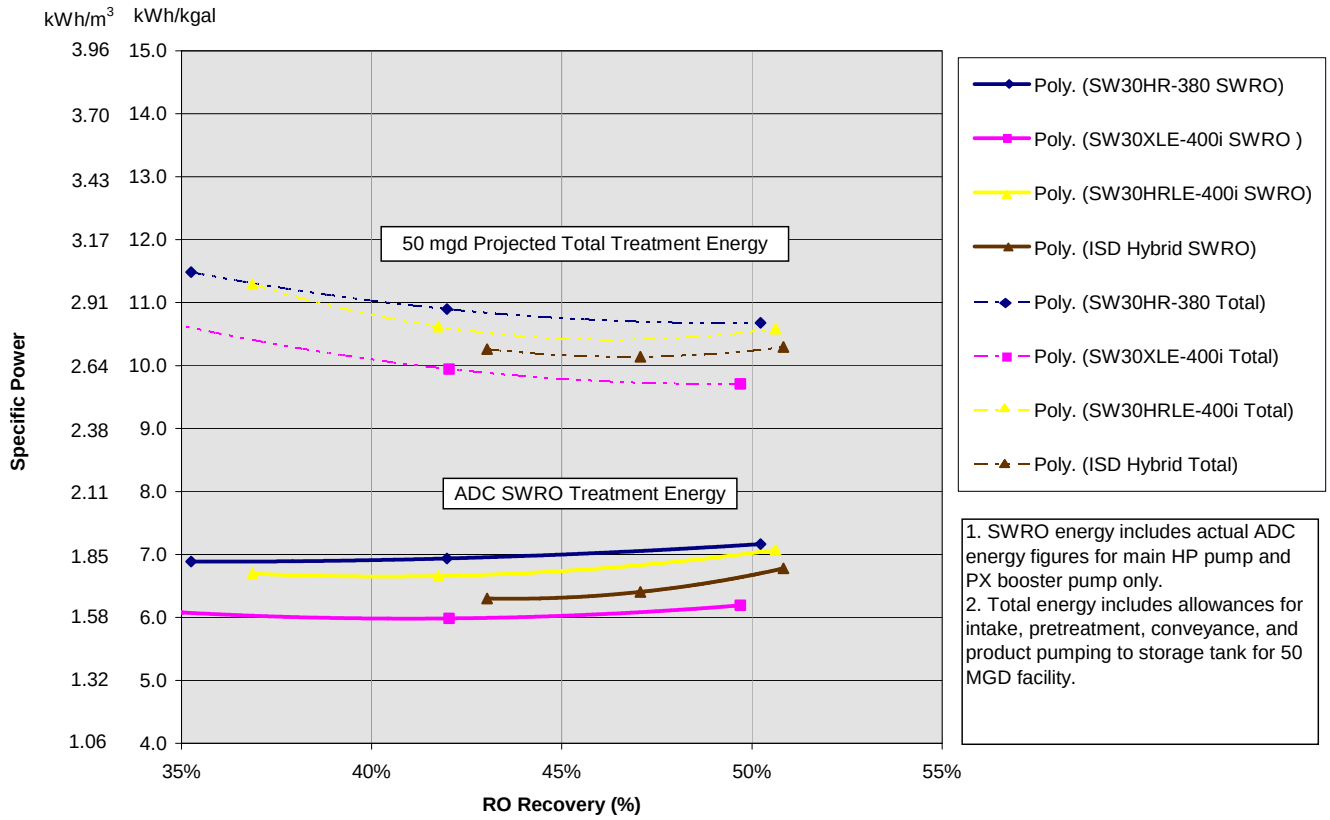

Figure 1.4 Energy use for standard vs hybrid membrane setup at 6 gfd (244 L/m^2/d) flux

1.2.3 Stage 3: Innovative Flow Regimes - As a natural result of isobaric energy recovery technology in particular, there are flow schemes that can improve the performance of higher recovery seawater and brackish water systems. These new flow schemes were used to demonstrate recoveries of seawater systems above 50%, while still maintaining acceptable water quality and low energy consumption. Test were conducted at a variety of test conditions to determine the range of possible operating conditions and the optimum operating point. Finally, the ADC continues to test and demonstrate advanced prefiltration technologies including an ultrafiltration system. In general, use of membranes for seawater pretreatment is limited and this work provides valuable information for the U.S. and world.

II MATERIALS AND METHODS

The ADC's SWRO plant is being tested at the U.S. Navy's Desalination Research Center, located in Port Hueneme, California. This facility was chosen based upon the availability of experienced staff familiar with the operation of SWRO process equipment and the availability of an existing ocean intake and outfall.

The ADC's demonstration scale system design and testing protocols were developed by Carollo Engineers and reviewed by the ADC's members. The design and testing protocols established the basis for the study, how the equipment is to be tested, how the data is to be interpreted, and the cost estimating procedures. This process helps to ensure that the data and results developed during the study will not be influenced by a desired result. A detailed testing protocol including manufacturer specific information is available on the ADC's website: www.affordabledesalination.com, and is summarized below.

2.1 Equipment

The ADC's demonstration scale SWRO plant is designed to produce between 48,100 to 75,600 gallons per day (182 to 286 m^3/day) of permeate. The configuration is similar to Phase I presented in **Figure 1.1**. As indicated, the process uses an open intake, pretreatment filter, cartridge filter, high efficiency positive displacement pump, and high efficiency isobaric energy recovery device. The media filter used for pretreatment in Phase I was replaced by ultrafiltration membranes after stage 1 was complete. The design criteria for these components are presented in **Table 2.1**.

Parameter	Unit	Value
Filter (Media)		
Loading Rate	3 to 6	gpm/ft^2
	120 to 240	lpm/m^2
Depth/Grain Size/U.C. of Anthracite	18 / 0.85-0.95 / <1.4	in/mm/-
Depth/Grain Size/U.C. of Sand	10 / 0.45-0.55 / <1.4	in/mm/-
Depth/Grain Size/U.C. of Gravel	6 / 0.3 / <1.4	in/mm/-
Filter (Membrane)		
Size	UF (0.01 micron)	
Flux	20	gfd
	815	L/m^2/day
Cartridge Filter		
Cartridge Specs	#2, 5-micron	
Loading Rate	~1	gpm/10-in.
	~10	lpm/m
Membrane System		
Models	Various	
Diameter	8	Inch
Elements per Vessel	7	No.
Vessels	3	No.
High Pressure Pump		

	Type	Positive Displacement	
	TDH	1385 to 2790 (600 to 1200) 422 to 844 (4137 to 8274)	ft (psig) m (kPa)
Energy Recovery			
	Type	Pressure Exchanger™ (PX™)	
PX Booster Pump			
	Type	Multi-stage Centrifugal	
	TDH	70 to 115 (20 to 50) 21 to 35 (138 to 345)	ft (psig) m (kPa)

Table 2.1 Equipment design criteria

2.2 Operation and Monitoring

2.2.1 Schedule The system is being operated for approximately 32 months with work divided into 3 stages (**Table 2.2**).

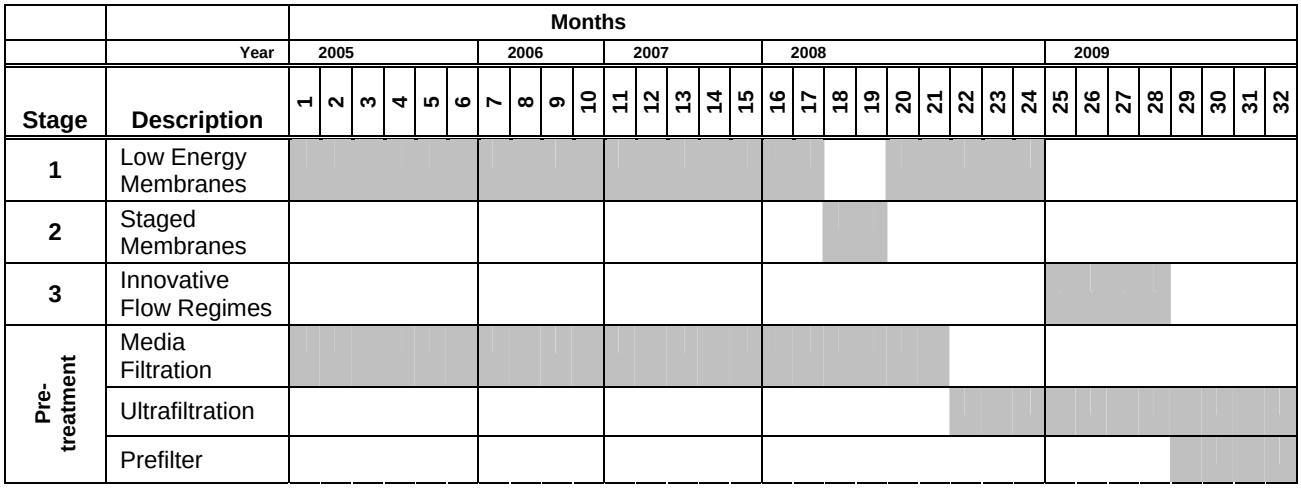

Table 2.2 Project timeline

2.2.2 Innovative Flow Regimes - This involves the development and testing of process flows that are possible in conjuction with isobaric energy recovery technologies. As a natural result of PX technology in particular there are flow schemes that may improve the overall system performance of higher recovery seawater and brackish water systems. The intentionally unbalanced PX concept developed by John MacHarg in **Figure 2.1** yields a higher overall system recovery of "F" divided by "A" (i.e. 54%), but a lower membrane recovery of "F" divided by "E" (i.e. 44%). In addition, there are other flow regimens discussed at the end of the paper under next steps.

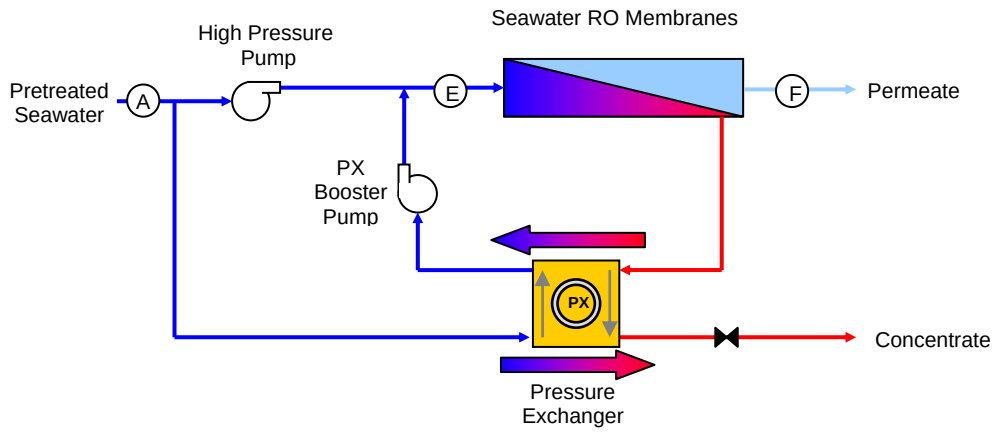

Figure 2.1 Unbalanced pressure exchanger diagram

2.2.3 Test Protocol The unbalanced testing uses a further revised set of test operating conditions due to the unique combinations of membrane and system recoveries, shown below at 9 gfd (**Table 2.3**).

	Goal		Actual							
	RO Recovery %	**System Recovery %**	**RO Recovery %**	**System Recovery %**	**Flux (gfd)**	**HP pump Flow (gpm)**	**PX Booster Pump Flow (gpm)**	**Permeate Flow (gpm)**	**PX Inlet Flow (gpm)**	**Concentrate Flow (gpm)**
Ripening	42.5	42.5	42.0	41.9	8.97	72.5	72.2	52.3	52.3	72.2
Multi-Point Testing	40	40	40.2	40.3	8.97	77.7	77.3	52.3	52.3	77.3
		45	40.4	45.6	8.98	77.2	62.5	52.4	52.4	62.5
		50	40.4	50.7	8.98	77.3	50.9	52.4	52.4	50.9
		55	40.4	55.8	8.95	77.1	41.3	52.2	52.2	41.3
		60	40.4	61.1	9.00	77.3	33.5	52.5	52.5	33.5
	45	45	45.6	45.6	9.02	62.8	62.7	52.6	52.6	62.7
		50	45.4	50.7	8.98	62.9	51.0	52.4	52.4	51.0
		55	45.4	55.7	8.97	63.0	41.6	52.3	52.3	41.6
		60	45.5	61.1	9.00	63.0	33.4	52.5	52.5	33.4
	50	50	50.5	50.6	8.97	51.2	51.0	52.3	52.3	51.0
		55	50.6	56.0	9.00	51.3	41.2	52.5	52.5	41.2
		60	50.5	61.1	9.00	51.4	33.5	52.5	52.5	33.5
	55	55	55.7	55.9	8.98	41.6	41.4	52.4	52.4	41.4
		60	55.7	60.9	9.00	41.7	33.7	52.5	52.5	33.7
Balanced RO & System Recovery Points (shown for reference)	40	40	40.2	40.3	8.97	77.7	77.3	52.3	52.3	77.3
	45	45	45.6	45.6	9.02	62.8	62.7	52.6	52.6	62.7
	50	50	50.5	50.6	8.97	51.2	51.0	52.3	52.3	51.0
	55	55	55.7	55.9	8.98	41.6	41.4	52.4	52.4	41.4

Table 2.3 Test operating conditions at 9 gfd

Testing begins with a 2 week ripening period to ensure the membranes have reached steady state operation before the flux or recovery is modified. The multi-point testing involves changing the RO and system recovery approximately daily to collect data over the range of recoveries. The multi-point testing is performed at a flux of 7.5 and 9.0 gfd (306 and 367 L/m^2/d). Upon completion of the tests, data are analyzed and a net present value analysis is conducted (described below) to determine which test condition(s) is the most cost effective operating point(s) known as the most affordable point (MAP). The system was finally operated at 45% RO recovery and 60% system recovery at 7.5 gfd for a period of 1 month.

2.2.4 Water Quality and Operation Data Collection During each testing condition, hydraulic, water quality and energy data are collected at periodic intervals. **Table 2.4** presents the type and frequency of manually collected data.

	Parameter	Weeks 1-2 and 6-8	Weeks 3-5
Flow	Permeate, Raw Water (PD Pump), Raw Water (into PX), Raw Water (out of PX)	1x per day	3x per week
Pressure	Filter Inlet, Filter Outlet, Cartridge Filter Outlet, PX Booster Pump Suction, PX Brine Outlet, RO Feed, RO Brine, RO Permeate	1x per day	3x per week
Energy	PD Pump & PX Booster Pump	1x per day	3x per week
Water Quality	Temperature, Turbidity, SDI	Raw: 1x per day	3x per week
	pH, Conductivity, TDS,	Raw: 1x per day RO Feed: 1x per day Permeate: 1x per day	Raw: 3x per week RO Feed: 3x per week Permeate: 3x per week
	Boron, Bromide, Iron, Manganese, Aluminum, Calcium, Magnesium, Sodium, Potassium, Bicarbonate, Carbonate, Sulfate, Chloride, Fluoride	Raw: 2x per week RO Feed: 2x per week Permeate: 2x per week	Raw: 3x per week RO Feed: 3x per week Permeate: 3x per week

Table 2.4 Type and frequency of manual data collection

Water quality parameters sampled daily are analyzed using field kits and those parameters monitored weekly are analyzed using EPA or *Standard Methods* [2]. Key water quality parameters are shown below (**Table 2.5**).

Parameter	Location	Mean	Range
TDS (mg/L)	Raw	34,000	31,400 – 36,300
Temperature (^{o}C)	Raw	15	12 – 20
Boron (mg/L)	Raw	4.8	3.9 – 6.1
Turbidity (NTU)	Raw	1.6	0.25 - 12
Turbidity (NTU)	RO Feed	0.06	0.02 – 0.25
SDI – from Media Filter	RO Feed	4.0	1.8 – 11.4
SDI – from UF	RO Feed	2.6	1.2-4.3

Table 2.5 Key raw water quality parameters

2.2.5 Advanced Pretreatment Advanced filtration system(s) were added in the later part of the testing to replace the conventional media filtration system. The first advanced filtration system to be tested is a 0.01 micron UF membrane demonstration scale system. This is a low energy immersed membrane process that consists of outside-in, hollow-fiber modules immersed directly in the feed-water. The small

pore size of the membranes ensures that no particulate matter, including Cryptosporidium oocysts, Giardia cysts, or suspended solids pass into the treated water stream. If needed, oxidation and/or coagulation can be added to remove colloidal and dissolved components such as iron and natural organic matter. These features and advantages will help the ADC and other full scale seawater desalination systems operate more reliably through the California summer water conditions that include green algae blooms and red tide events.

2.3 Cost Estimating Procedures

A present value analysis model, which accounts for both capital and operating costs, was developed and used to establish the MAP. The present value analysis model is operated at the completion of the membrane/system recovery variation tests, presented previously in **Table 2.3**. The conditions for the present value analysis model were established as part of the testing protocol and are presented below (**Table 2.6**).

Plant Capacity	50 MGD		**High Service Pump TDH**	200 ft H_2O (61 m)
Plant Average Demand	95% of Plant Capacity		**Intake/High Service Pump Eff.**	80%
Plant Utilization Factor	95%		**Intake/High Service Pump Motor Eff.**	95%
Capital Cost [1]	Determined with WTCOST Model and Manufacturer Quotes		**RO Process Energy Demand**	Study data[2]
			RO Membrane Life	Refer to **Table 2.7**
			RO Membrane Element Cost	$550
Electrical Systems	12% of Capital Cost		**RO Pressure Vessel** [3]	$8547
Instrumentation & Control	10% of Capital Cost		**Sodium Hypochlorite Dose (pretreatment)**	2 mg/L
Project Life	30 years		**Sodium Hypochlorite Cost**	$1.2/lb ($0.54/kg)
Bond Payment Period	30 years		**Sodium Bisulfite Dose**	4.6 mg/L
Interest	5%		**Sodium Bisulfite Cost**	$0.3/lb ($0.14/kg)
Construction Contingencies	15% of capital cost		**Cartridge Filter Loading Rate**	3 gpm/10-in (31 lpm/m)
Contractor OH&P	10% of capital cost		**Cartridge Filter Cost**	$5/10-in
Engineering & Const. Mgmt.	25% of capital cost		**Cartridge Filter Life**	1000 hours
Permitting Cost	$10-million		**Carbon Dioxide Dose**	16 mg/L
Annual Maintenance Costs	1.5% of capital cost		**Carbon Dioxide Cost**	$0.04/lb ($0.02/kg)
Labor	25 operators @ $96,250/yr ea.		**Lime Dose**	44 mg/L
Energy Costs	$0.11 per kW-hr		**Lime Cost**	$0.05/lb ($0.02/kg)
Intake Pump TDH	200 ft H_2O (61 m)		**Sodium Hypochlorite Dose (finished water)**	1.5 mg/L

Note: O&M does not include administrative, laboratory, legal, reporting, and management fees since these costs vary widely.

1 Includes intake pump station, prechlorination/dechlorination systems, ferric chloride systems, media filtration, media filter backwash system, filtered water lift station, cartridge filters, SWRO equipment, RO bldg., permeate flush system, clean-in-place system, transfer pump station, process piping, yard piping, lime system, carbon dioxide system, chlorination system, high service pump station, site work.

2 Energy meter readings

3 Installed, includes all ancillary piping, frames and fittings.

4 Land costs and Inflation are not included in the Present Value Analysis

Table 2.6 Present value analysis conditions

Capital costs are determined under the assumption that the SWRO facilities would be co-located with a power plant. Therefore, the capital costs developed do not include any new intake or outfall facilities.

Pretreatment was considered similar to the demonstration scale test equipment, however, media filters were estimated in accordance with the deep bed filter concepts use for the Point Lisas SWRO facility in Trinidad (i.e., 4 gpm/ft^2, 5-ft anthracite, 2.5-ft sand, 2-ft garnet) [3,4]. Such a design has demonstrated to be more compatible with challenging raw water qualities (i.e., than the ADC's demonstration scale media filters), such as those associated with red tide events.

		Membrane Life (Years)	
RO Recovery %	**System Recovery %**	**7.5 gfd** (306 L/m^2/d)	**9.0 gfd** (367 L/m^2/d)
40	40	6.25	5.00
	45	6.25	5.00
	50	6.00	4.80
	55	5.75	4.60
	60	5.50	4.40
45	45	5.75	4.60
	50	5.75	4.60
	55	5.50	4.40
	60	5.25	4.20
	65	5.00	4.00
50	50	5.25	4.20
	55	4.75	3.80
	60	4.50	3.60
55	55	4.75	3.80
	60	4.50	3.60

Table 2.7 Estimated RO membrane life

Table 2.7 establishes the expected membrane life with respect to recovery. The expected membrane life is used to estimate membrane replacement cost. Membrane replacement resulting from warranty maintenance by the manufacturer was not part of the replacement cost.

The ADC demonstration plant employs a David Brown Union TD-60 positive displacement main high pressure pump that operates at very high efficiencies of 88-90%. Although positive displacement plunger pumps operate at a high efficiency it is not practical to employ the technology to very large systems because of their high maintenance requirements and pulsating flows. For large treatment plants centrifugal pumps with efficiencies between 55-89% are used. The achievable efficiency of a centrifugal pump depends on the size or flow rate of the pump, where lower flows typically will operate at lower efficiency compared to the larger pumps [5]. **Table 2.8** is an example using the standard ADC II membrane tests that projects the total energy consumption of various system capacities. A 0.3 MGD (1136 m^3/d) system that employs a 69% efficient centrifugal main high pressure pump and 70% efficient intake and pre-filtration pumps to be 15.0 kWh/kgal (3.96 kWh/m^3). By contrast, the 50 MGD projections use an efficiency of 89% for the main high pressure pump and 80% for the intake and pre-filtration pumps. In addition, the motors and control systems are generally more efficient for the largest systems resulting in a projected total treatment energy of 11.3 kWh/kgal (2.98 kWh/m^3).

	Projected energy consumption of various system capacities			
Treatment Step	**ADC II MAP from Std Tests**	**0.3 MGD (1136 m^3/day)** [2]	**10 MGD (37854 m^3/day)**[2]	**50 MGD (189271 m^3/day)** [2]
RO Process	7.6 / 2.00 [1]	10.5 / 2.80	8.6 / 2.27	7.6 / 2.00

Intake [2]	2.19 / 0.58	2.01 / 0.53	1.74 / 0.46	1.72 / 0.45
Pre-filtration [2]	1.15 / 0.30	1.06 / 0.28	0.91 / 0.24	0.90 / 0.24
Permeate treatment [2]	0.25 / 0.07	0.23 / 0.06	0.17 / 0.04	0.16 / 0.04
Permeate distribution [2]	1.27 / 0.33	1.17 / 0.31	0.86 / 0.23	0.85 / 0.22
Total Treatment	12.4 / 3.27	15.0 / 3.96	12.3 / 3.25	11.3 / 2.98

1 MAP average value from 7 membrane tests.
2 Projected values based on typical parameters and conditions.
3 Units for the table are in kWh/kgal / kWh/m^3

Table 2.8 ADC energy consumption at MAP and projected energy consumption at larger plant capacities

2.4 Quality Assurance and Quality Control

The ADC's quality assurance program consists of the following elements:

- Review of the testing protocol by all ADC members to establish testing procedures and cost estimating methods before conducting any of the work. This is done to ensure that the data does not influence the tests results or conclusions.
- Hydraulic data recorded both manually to compare and resolve discrepancies.
- Energy data is recorded by two separate power meters. Data is compared to resolve discrepancies and provide assurance that data is accurate.
- Water quality data analyzed according to EPA or *Standard Methods* procedures, including quality control.
- Final reporting prepared by a licensed professional engineer with an ethical duty to act in the public's interest.
- Peer review of present value model and final reporting. Peer reviewers are independent, third parties such as utility/agency members of the ADC and/or their consultants.

III RESULTS AND DISCUSSION

3.1 Raw Water Quality

Raw feed water was taken from an open intake at the end of a pier located in the Port Hueneme shipping channel feed by the Pacific Ocean (**Figure 3.1**).

Figure 3.1 Raw water intake at Port Hueneme

Feed water quality is summarized in **Table 3.1**. Salinity, boron, and temperature are shown in **figure 3.2**. It should be noted that once through cooling applications (SWRO intake using co-located power plant intake) would have higher temperatures, which would lead to different permeate qualities and lower energy consumptions than those reported by the ADC.

		During Unbalanced Test		During All Testing	
Parameter	**Location**	**Mean**	**Range**	**Mean**	**Range**
TDS (mg/L)	Raw	31,900	31,400 – 33,300	34,000	31,400 – 36,300
Temperature (^{o}C)	Raw	15	13 – 18	15	12 – 20
Boron (mg/L)	Raw	5.1	4.5 – 5.8	4.8	3.9 – 6.1
Turbidity (NTU)	Raw	2.3	0.0 - 6.6	1.6	0.25 – 12
Turbidity (NTU)	RO Feed	0.03	0.02 - 0.06	0.06	0.02 – 0.25
SDI – from Cartridge Filter	RO Feed	2.6	1.7 – 4.3	3.5	1.2 – 11.4

Table 3.1 Water quality during unbalanced flow testing compared to all testing

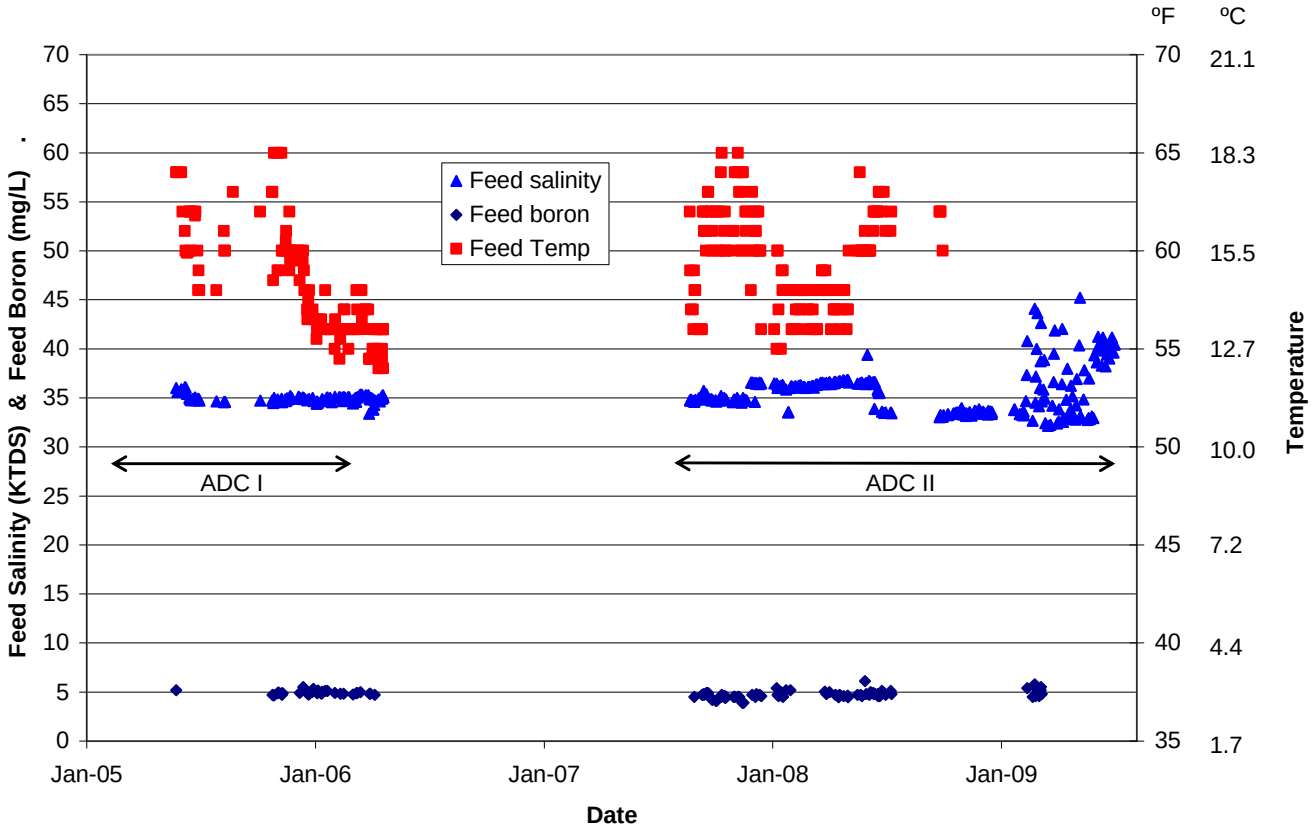

Figure 3.2 Salinity, boron, and temperature

3.2 Pretreatment System Performance

The pretreatment process, from June 2008 through 2009, has been two 3 mm strainers, followed by a submerged UF system operating at 20 gfd (815 L/m^2/d), followed by 5 micron cartridge filtration. The system has performed well during this time, producing a consistent high quality product (**Figure 3.3** & **Figure 3.4**).

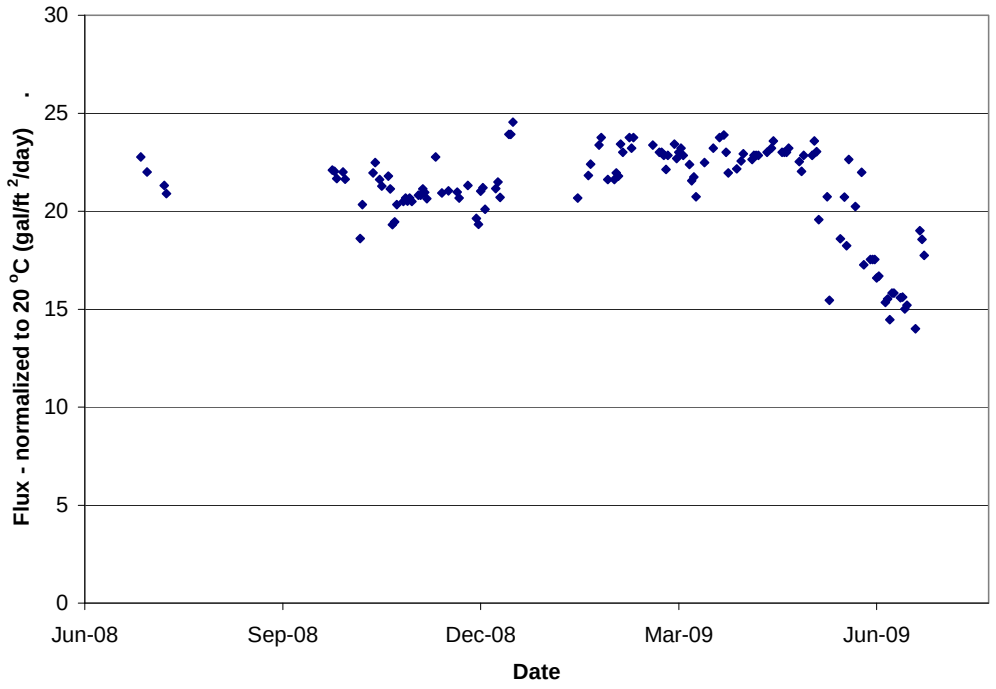

Figure 3.3 Normalized filtrate flux (@20 °C) for the UF membrane system

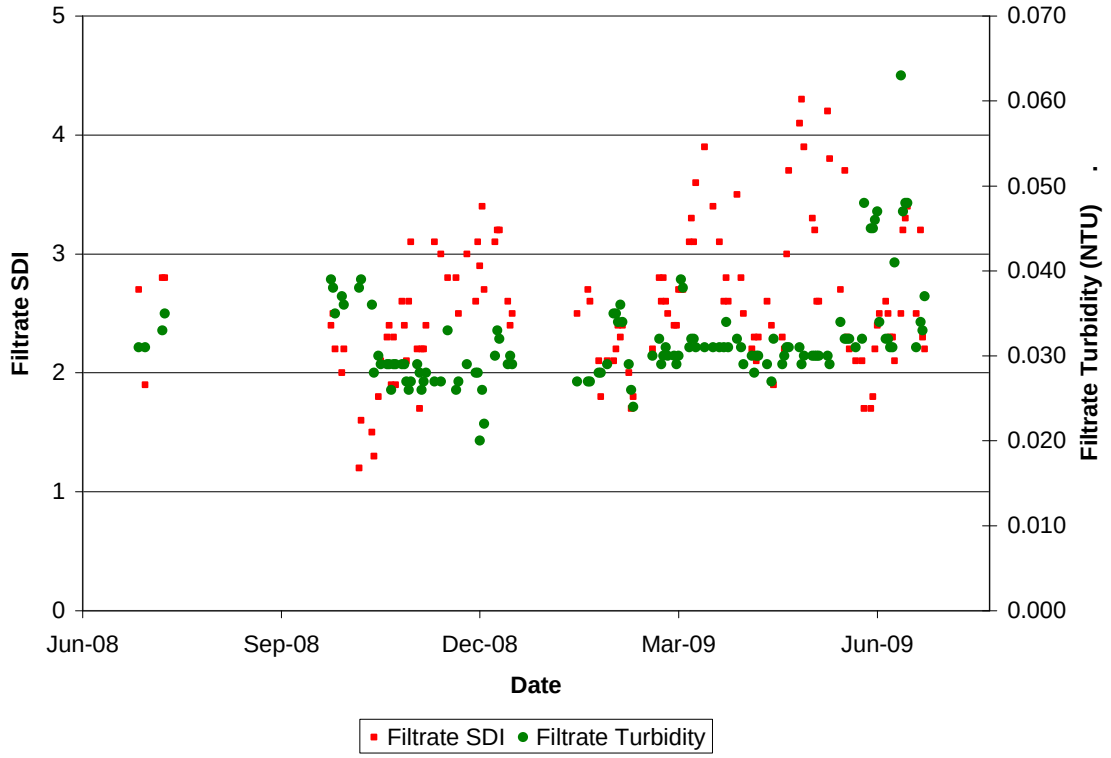

Figure 3.4 Turbidity & SDI for the UF membrane system

The UF performance compared to the media filter performance is shown below (**Figure 3.5**).

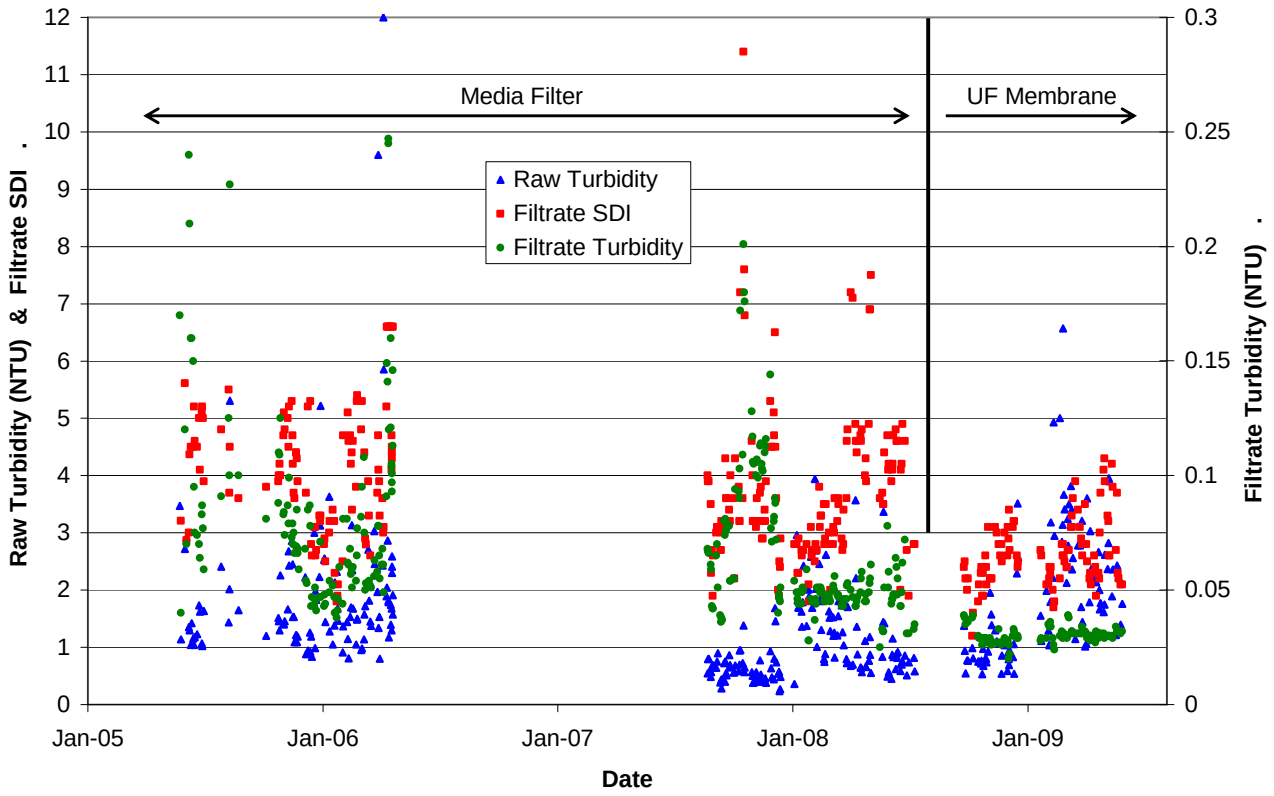

Figure 3.5 Turbidity & SDI for the UF membrane and media filter systems

It should be noted that in the summer of 2005, Southern California experienced localized and prolonged periods of red tides and extensive algae blooms. Red tides tend to occur most frequently in the spring and fall months and average 1-2 weeks in duration. The summer of 2005 was recognized as an anomalous period and stressed the media filtration system. In contrast, since the start of ADC II from August-2007 until July-2008 the ADC has experience approximately 8 discrete days in which satisfactory water quality could not be achieved using the basic multi-media system. In full scale applications, more robust designs would be applied to ensure that water quality and continuous operation could be maintained through these challenging but brief events that occur in Southern California costal waters.

After an initial optimization period, the UF membrane system performed very well with filtrate turbidity reduced by 97% and filtrate SDI values consistently below 4. This is compared to media filtration system SDI of 4 on average, but spikes up to 8 and turbidity reduced by 94%. Cartridge differential pressures following the UF system were typically flat for the first month of operation, and then began to rise at a variable rate to the maximum of 15 to 20 psi (103-138 kPa) before replacement.

3.3 Unbalanced Flow

3.3.1 Multi-point Testing Results The multi-point tests were conducted at a flux of both 7.5 and 9.0 gfd (306 and 367 L/m^2/d). Most of the 7.5 gfd test points were re-run after discovering that the baseline

performance could not be achieved at the end of the testing. This was potentially due to membrane compaction during the initial high recovery and high feed pressure tests. Subsequent testing did not include the highest recovery points and included a baseline performance check between each different system recovery point. The results from the 7.5 gfd multi-point testing are shown in **Table 3.2** and **Figure 3.6**. Results from the 9.0 gfd multi-point testing are shown in **Figure 3.6** and **Figure 3.7**.

	Goal		Actual								
	RO Recovery %	System Recovery %	RO Recovery %	System Recovery %	RO Specific Energy (kWh/m^3)	Feed TDS (mg/L)	Permeate TDS (mg/L)	RO Membrane Feed Pressure (kWh/m^3)	Flux (gfd)	Temperature (^{o}C)	Test #
Ripening	42.5	42.5	42.6	42.6	1.77	33,250	119	770	7.53	15	1
Multi-Point Testing	40	40	40.6	40.7	1.81	32,670	129	783	7.51	14	1
		45	40.7	45.6	1.94	34,520	137	842	7.51	14	1
		50	40.6	51.0	2.13	37,190	158	928	7.49	14	1
		55	40.4	55.9	2.31	39,970	181	1005	7.47	14	1
		60	40.5	61.1	2.54	43,660	205	1105	7.53	14	1
	45	45	45.5	45.6	1.94	32,790	147	867	7.51	13	2
		50	45.5	50.8	2.06	34,220	165	922	7.49	14	2
		55	45.7	56.1	2.25	36,920	186	1015	7.51	14	2
		60	45.6	61.2	2.51	40,370	217	1120	7.49	14	2
		65	45.3	66.1	2.81	45,210	235	1242	7.44	13	2
	50	50	50.2	50.2	2.06	32,950	148	930	7.47	14	2
		55	51.0	55.9	2.20	34,850	194	998	7.53	16	2
		60	50.8	61.1	2.43	37,830	226	1099	7.49	16	2
	55	55	55.9	55.9	2.14	32,940	194	979	7.51	16	2
		60	56.2	61.3	2.43	36,980	222	1107	7.49	16	2
Balanced RO & System Recovery Points (shown for reference)	40	40	40.6	40.7	1.81	32,670	129	783	7.51	14	1
	45	45	45.5	45.6	1.94	32,790	147	867	7.51	45.5	2
	50	50 [1]	50.2	50.2	2.06	32,950	148	930	7.47	50.2	2
	55	55 [1]	55.9	55.9	2.14	32,940	194	979	7.51	55.9	2

Test 1: Original 7.5 gfd test. 40% RO Recovery was not performed in test 2, so a direct comparison can not be made.
Test 2: Re-run of 7.5 gfd test.
(1) At 50% and 55% recovery PX flow rates were below manufacturer's minimum requirements, which resulted in excessive mixing performance at balanced flows. At these points, over flushing with the low pressure flow was used to control mixing and simulate normal mixing levels. Therefore, in the NPV analysis RO recovery was substituted for System recovery at these points.

Table 3.2 Multi-point testing results at 7.5 gfd (306 L/m^2/d)

Figure 3.7 shows a minimum energy use point at 45% membrane and system recovery. Also shown on the 45% membrane recovery curve is the ability to increase the system recovery to some degree without a substantial sacrifice on energy.

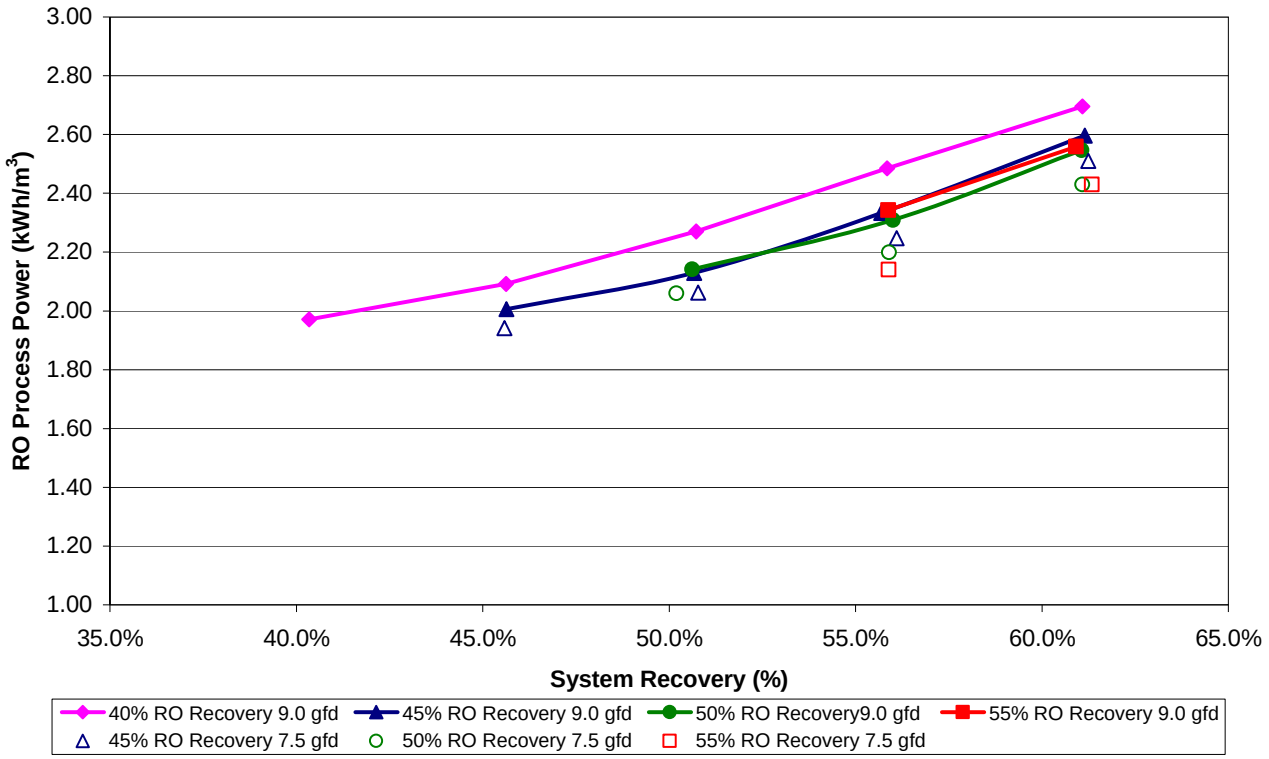

Figure 3.6 Unbalanced system recovery vs. energy use at 9 and 7.5 gfd (306 and 367 L/m^2/d)

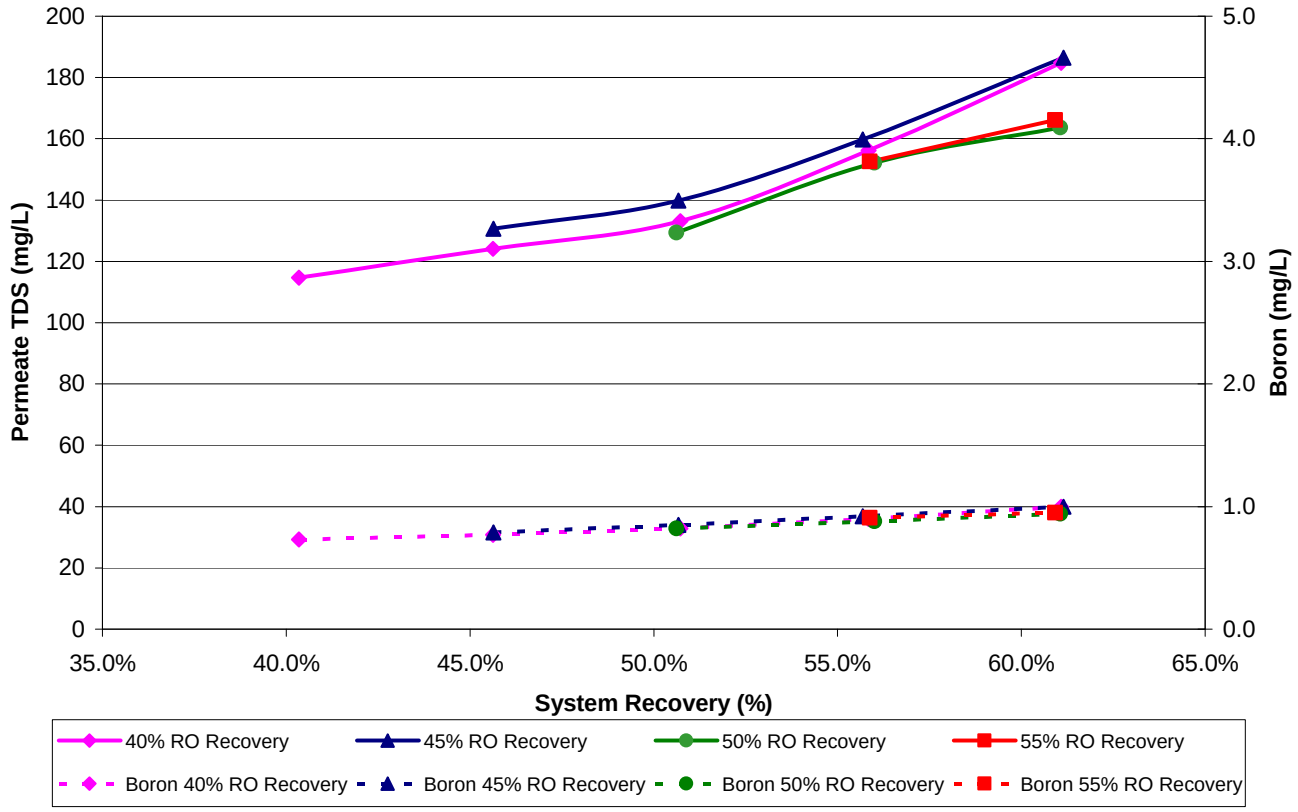

Figure 3.7 Unbalanced recovery vs. water quality at 9 gfd (367 L/m^2/d)

The conditions for the 50% system recovery / 45% RO recovery point are shown below (**Figure 3.8, Table 3.3**).

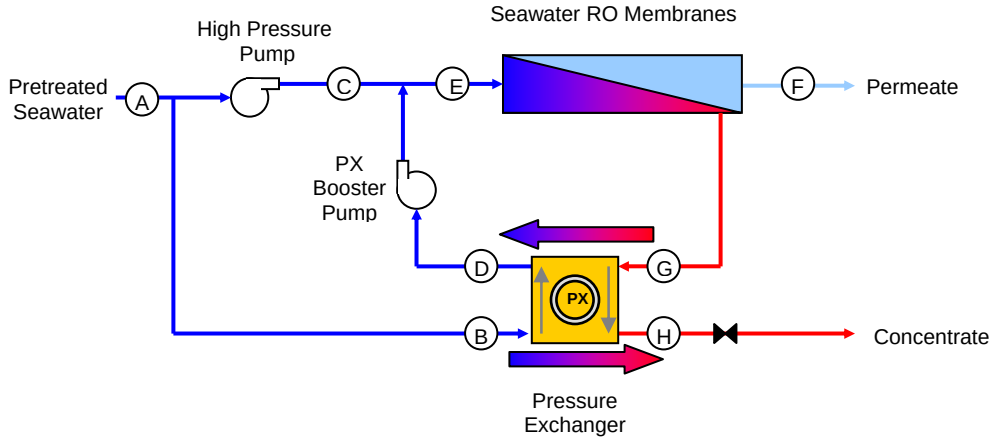

Figure 3.8 Unbalanced pressure exchanger diagram

		System Feed	PX Low Pressure in	High Pressure Pump Out	PX High Pressure Out	RO Membrane Feed	Membrane Permeate	Membrane Concentrate	System Concentrate
		A	**B**	**C**	**D**	**E**	**F**	**G**	**H**
Flow	gpm	87.9	41.9	46.0	52.3	98.3	43.8	54.5	44.1
	gpd	126,547	60,307	66,240	75,355	141,595	63,072	78,523	63,475
	m^3/day	479	228	251	285	536	239	297	240
Pressure	psi	31	30	860	842	860	3.3	852	26
	kPa	214	208	5929	5805	5929	23	5874	180
Quality	mg/L TDS	32,270	32,270	32,270	40,250	34,690	154	68,690	68,090

(a)

PX Unit Flow

High Pressure Feed Flow (gpm/lpm)	G	46 / 174
PX Internal Bypass (gpm/lpm)	C-F	2.2 / 8
PX Differential HP side (psi/kPa)	G-D	10 / 69
PX Differential LP side (psi/kPa)	G-H	826 / 5694
PX Efficiency (%)	(H+D)/(B+G) [1]	94.7%
Membrane Differential (psi/kPa)	E-G	8 / 55
RO Recovery (%)	F/E	44.5%
System Recovery	F/A	51.1%

[1] $(F_H P_H + F_D P_D) / (F_B P_B + F_G P_G)$

(b)

	High Pressure Pump	PX Booster Pump
Feed Pump Efficiency	90%	60%
Motor Efficiency	93%	90%
VFD Efficiency	97%	97%
Total Efficiency	81%	52%
Energy (KW)	17.7	0.7

All values are assumed except for Energy.

(c)

Table 3.3 Unbalanced pressure exchanger and system data at the 50/45 point (a) system data, (b) pressure exchanger data, (c) pump data

The following findings are drawn from these results:

- All tests up to 65% system recovery and 55% membrane recovery show acceptable product water TDS of up to 250 mg/L.
- Over the range of recoveries tested, RO membrane specific energy increases with recovery while the WTP facility energy required for treatment decreases or remains steady up to 45% recovery. This is due to the increased volume of raw feed water that must be pumped and treated at lower recovery rates to obtain the same volume of permeate. Above 45% system recovery, RO membrane specific energy increases at a higher rate, therefore increasing the total energy required as recovery increases. Therefore, these results show the importance of analyzing a facility process as a whole, and not just the RO specific energy.
- Mechanisms associated with this novel unbalanced mode of operation that might lead to improved and/or sustainable performance at higher recoveries include:
    - Improved boundary layer conditions in the elements through increased feed velocities
    - Optimal hydraulic conditions at the "low energy" recovery point
    - Balanced membrane flux through increased lead element velocities
    - Minimum brine flow requirements within manufacturers specifications
    - Maximum allowable recoveries within manufacturers specifications

3.3.2 Longer Term Testing The multi-point testing results indicated that higher recoveries of 60% to 65% were likely sustainable. Therefore, longer term testing was performed at a 60/45 instead of the 50/45 MAP to test the system limits. The test covered 1 month of continuous operation (**Figure 3.8**). This graph shows both stable energy use and product TDS. Pressure, recovery, and flux all remained constant. While longer term testing of 6 months would provide a more definitive indication of reliability, the results look promising for higher recovery operation when the associated higher energy use can be justified for expanded capacity.

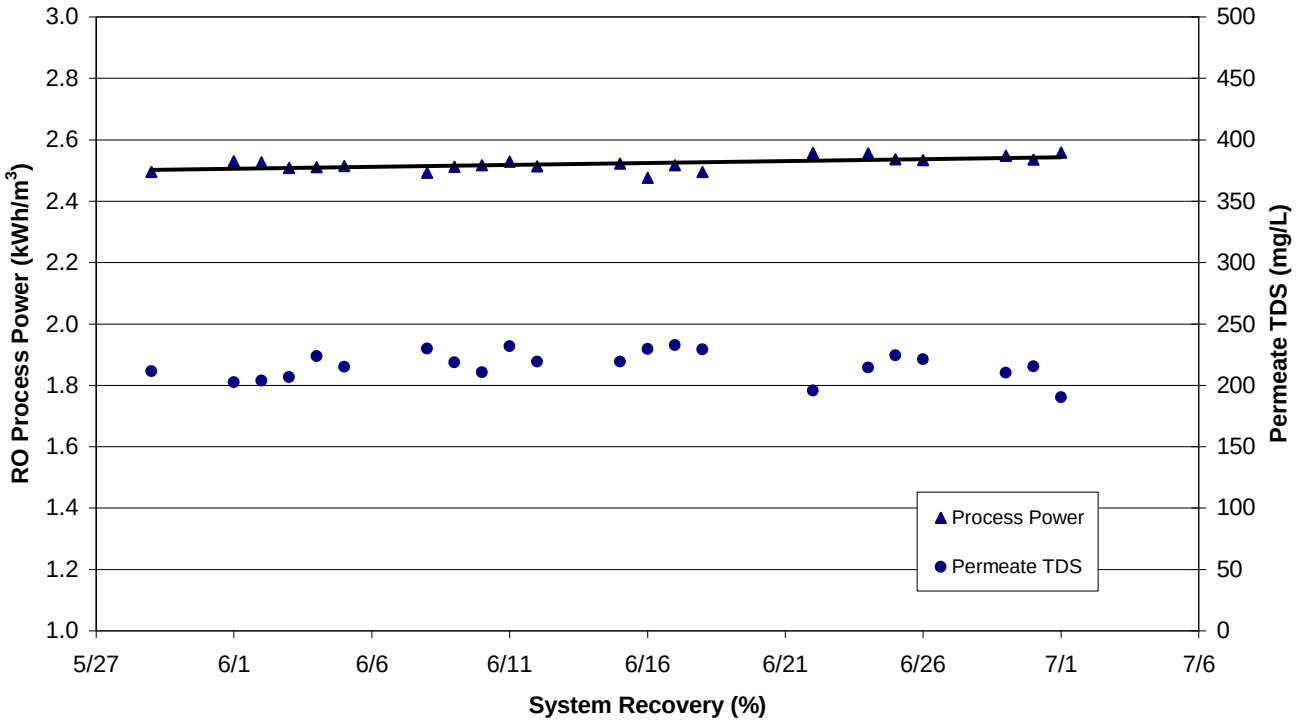

Figure 3.8 Longer term testing

3.4 Cost Estimates

Estimated costs for the ADC's conceptual 50 MGD facility are presented in **Figure 3.9 and 3.10**. These costs are in 2008 dollars.

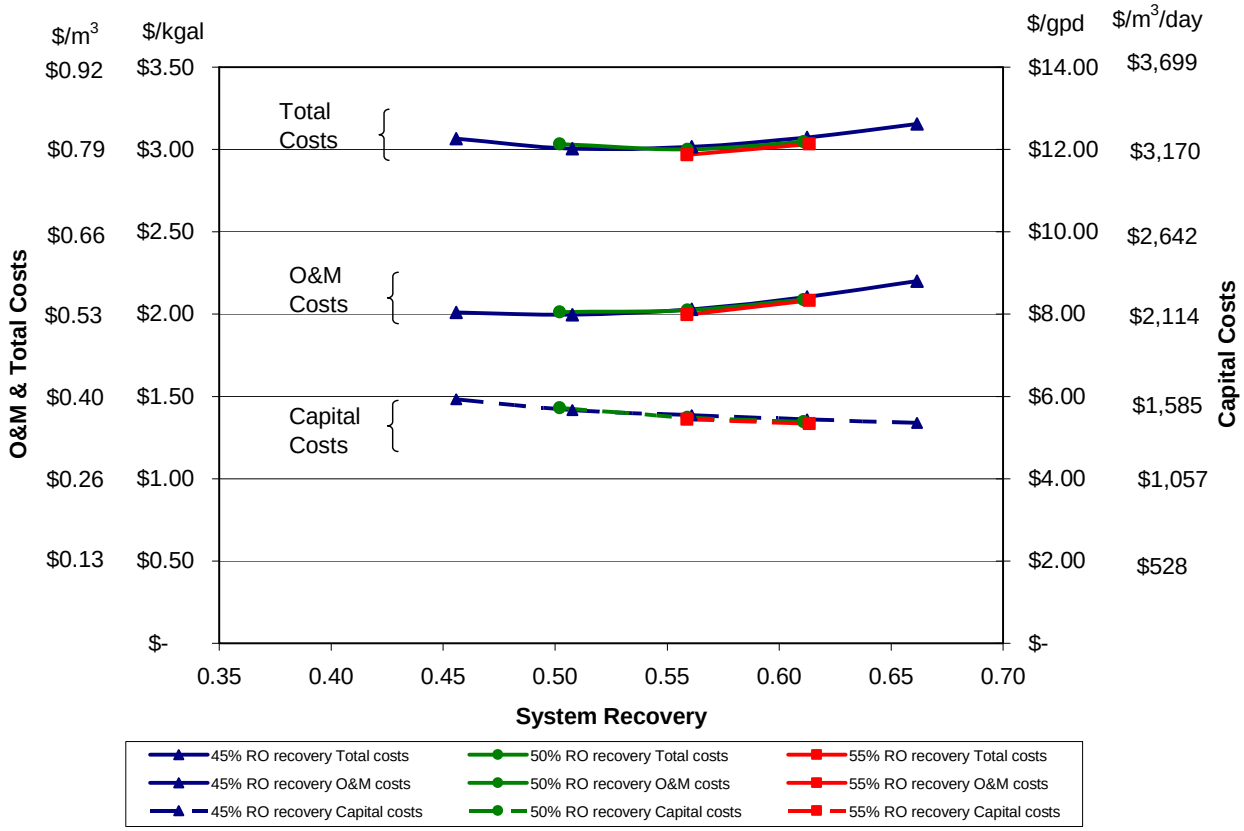

Figure 3.9 Projected costs for 50 MGD (189,000 m^3/day) treatment plants at 7.5 gfd (306 L/m^2/d) flux

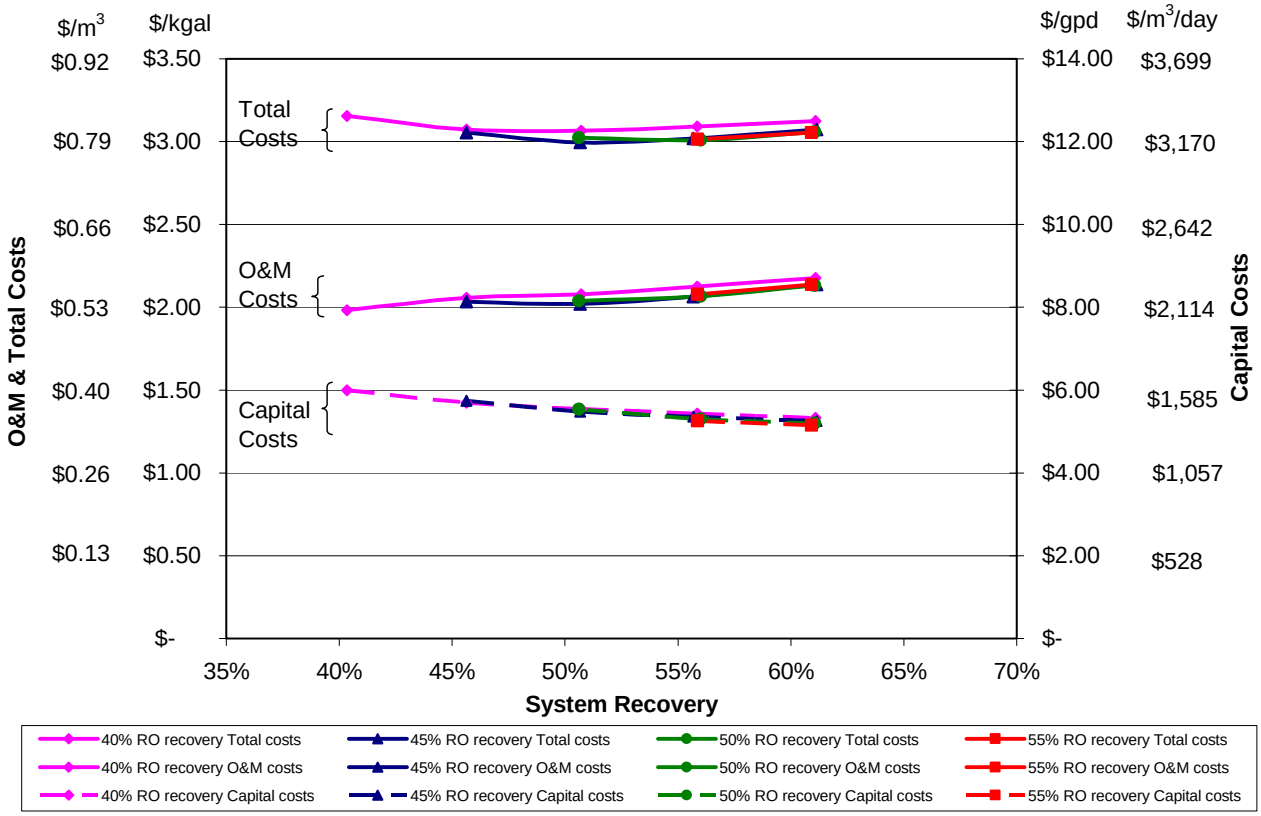

Figure 3.10 Projected costs for 50 MGD (189,000 m^3/day) treatment plants at 9 gfd (367 L/m^2/d) flux

The costs include the estimated capital cost as well as the operation and maintenance cost over the range of membrane and system recovery conditions tested for these unbalanced tests. As presented previously, these costs assume that the facility can share an existing open ocean intake and outfall and include in-line coagulation, deep bed media filtration, six RO trains with dedicated pumps, lime and carbon dioxide post treatment, new finished water pumping facilities.

The following findings are drawn from these cost estimates:

- According to the ADC's 50 MGD (189,000 m^3/day) net present value model for the projected cost of water over the range of recoveries ranged from \$3.00-3.16/kgal (\$0.77-\$0.82/m^3) for the7.5 gfd (306 L/m^2/d) flux tests and \$3.00-3.15/kgal (\$0.79-\$0.82/m^3) for the 9.0 gfd (367 L/m^2/d) flux tests.
- Over the range of flux and RO membrane recoveries that were tested, the cost per unit volume remained nearly constant between 45 and 55% system recovery.
- The RO energy consumption of 7.81 kWh/kgal (2.06 kWh/m^3) at the 50/45 MAP and flux of 7.5 gfd (306 L/m^2/d) is within the range of MAP points ((6.92-8.32 kWh/kgal (1.83-2.20 kWh/ m^3)) found during balanced flow tests in ADC I and II.
- While the MAP shown below did not produce the best water quality, of the tests, the TDS of 150 mg/L is still quite good at this point.
- The cost per unit volume reaches a minimum point at 50% system recovery / 45% RO membrane recovery at 9.0 gfd and at 55%/50% at 7.5 gfd, The previous ADC I and II testing on the suite of membranes from various manufacturer showed the lowest estimated total water cost at 50% recovery based on balanced PX operation. Operating at a recovery of 50% is slightly different than recommendation of some in the industry that advocate lower recoveries (e.g. 45%) to maximize membrane life, reduce cleaning frequencies and produce the highest quality permeate [6,7]. However, the impact of high recovery on membrane replacement costs, cleaning frequencies, and permeate quality are factored into the ADC's cost estimate.
- As expected, the capital costs continue to decrease as the recovery increases at the expense of higher energy use and higher potential for membrane fouling. However, these higher system recoveries that still maintain acceptable membrane recoveries can be invaluable for water treatment plants that either have substantial space limitations or need to increase capacity and can prevent or delay construction of additional facilities by increasing recovery. There are other factors such as a typical feed pressure limit of 1200 psi (8273 kPa) including room for membrane fouling.
- At 7.5 gfd (306 L/m^2/d), O&M costs comprise approximately 66% of the total water cost. RO energy consists of approximately 29% of the total water cost at the 50/45 MAP.

IV CONCLUSIONS

The following results and conclusions can be made from the ADC's demonstration study data and a conceptual 50 MGD SWRO facility:

- Testing was performed consecutively and was not conducted as a side by side evaluation. Therefore the results should not be used to make a direct performance comparison to the previous testing results, but estimated differences in performance and cost can be derived.

- Though the RO specific energy generally increases with recovery rate, between 40-45% system recovery the total energy required for treatment decreases or remains stable up to approximately 50%. This is due to the increased volume of raw feed water that must be pumped and treated at lower recovery rates to obtain the same volume of permeate.

- For seawater RO systems with varying feed water TDS, the ability to unbalance the PX and increase system recovery can help maintain stable RO feed pressures keeping the main HP pump operation at desired and efficient operating points. Furthermore, pretreatment energy and operating costs can be saved.
- The lowest projected WTP facility energy consumption occurred at 45% system recovery /45% RO membrane recovery. This is consistent with previous testing and typical industry recommendations for lowest energy operation.
- The projected total water cost reached a minimum at 50% system recovery / 45% RO membrane recovery at 9 gfd and at 55%/50% at 7.5 gfd, but other nearby points were of similar cost. These result potentially expand the lowest cost operating point options from typical industry recommendations.
- The unbalanced PX flow conditions allow for system recoveries greater than the 50% membrane recovery limits for the typical warranty considerations. Results show that system recoveries of up to 65% are potentially sustainable. Longer term testing for 1 month at 60% system recovery / 45% RO recovery show reliable membrane operation.
- The UF membrane pretreatment system showed reliable operation with over 6 months of operating time. The feed water to the RO system was of consistent water quality unaffected by changes in feed water turbidity.

The ADC has been able to demonstrate total energy consumption for seawater desalination at 11.28 kWh/kgal (2.98 kWh/m^3) at a projected total cost of \$3.00/kgal (\$0.79/m^3). These costs include escalations in commodity costs and other factors compared with previous ADC low energy / low cost results of 10.4 to 11.3 kW-hr/kgal (2.75-2.98 kWh/m^3) at a projected total cost of \$2.83-3.00/kgal (\$0.75-\$0.79/m^3). These energy levels and cost figures are comparable to other traditional sources. For example, in Southern California the State Water Project which transports water from Northern California to Southern California consumes on average 10.4 kWh/kgal (2.75 kWh/m^3) [8]. And in San Diego, California end users can pay more than \$6.00/kgal (\$1.58/m^3) [9]. Therefore, Southern Californian seawater desalination is a drought-proof affordable and reliable new source of high quality fresh water.

V ACKNOWLEDGEMENTS

The authors would like to acknowledge the members of the ADC for their material, technical and financial support in completing this work.

VI REFERENCES

1. Seacord, T., S. Coker, and J. MacHarg. 2006. Affordable Desalination Collaboration. 2006 AMTA Biennial Conference. Los Angeles, CA.
2. L.S. Clesceri, A.E. Greenburg, and A.D. Eaton. 1998. Standard Methods for the Examination of Water and Wastewater, 20th Edition. APHA, AWWA, WEF.
3. Trussell, R.R., J. Jacangelo and R. Cass. 2004. Design and Performance of the Pretreatment for the Point Lisas Desalter. Proc. 2004 AWWA Annual Conference. Orlando, FL.
4. Irwin. K.J. and J.D. Thompson. 2003. Point Lisas SWRO Plant Trinidad - First Year Success. The International Desalination & Water Reuse Quarterly. 13:3 (12-16).

5. Seacord, T.F., S. Dundorf, and J. MacHarg. Affordable Desalination Collaboration 10 MGD Conceptual Case Study. Proc. 2007 AMTA Conference. Las Vegas, Nevada.
6. MacHarg, J. 2001. Exchanger Tests Verify 2.0 kWh/m^3 SWRO Energy Use. International Desalination and Water Reuse Quarterly. Vol 11/No. 1
7. Proto, T., E. Schoepke, L. Etchinson, T. O'Brien, B. Hernon, K. Perry, and M. Peterson. 2000. Production of High Purity Water from Seawater. Proc. 2000 North American Biennial Conference of the American Desalting Association. South Lake Tahoe, Nevada.
8. Water Sources Powering Southern California, by Robert C. Wilkinson Ph.D., January 2004.
9. Water and Desalination Report, vol 41, #42, These prices represent the volumetric price of water, including taxes, for domestic consumers using less than 15 m^3 per month.

Permeate Recovery Rate Optimization at the Alicante Spain SWRO Plant

Authors: *Richard Stover, Antonio Ordonez Fernandez, Joan Galtes*

Presenter: *Richard Stover*
Chief Technical Officer – Energy Recovery, Inc. – USA

Abstract

The permeate recovery rate in a reverse osmosis (RO) process is generally defined as the permeate flow rate divided by the membrane feed flow rate. An alternative definition is the permeate flow rate divided by the process feed flow rate. Historically, the process and membrane feed flow rates have been equal.

A high recovery rate means a high process yield. However, in a desalination process, operation at high recovery results in higher average concentrate salinities in the membrane elements, higher osmotic pressures and higher membrane feed pressures compared to operation at low recovery. In addition, supersaturation of the concentrate can result in more scaling and high membrane flux can result in more fouling. On the other hand, low recovery rate operation directly reduces process yield and can result in excess pretreatment and supply-pumping expenses. Permeate recovery rate optimization, therefore, is a critical exercise for RO process design and operation.

In most seawater RO processes being built today, such as the seawater RO plant built and operated by Inima (Grupo OHL) in Alicante Spain, isobaric energy recovery devices (ERDs) are applied to save energy. The flow rates of the high- and low-pressure streams through the devices to be unequal or unbalanced. Earlier turbine-based ERDs did not allow this flexibility. As a result, permeate recovery rate and process recovery rate can be set separately in RO processes equipped with isobaric ERDs. This feature adds a degree of freedom to recovery rate optimization and an opportunity for reducing energy consumption and/or improving process yield.

The authors present a detailed consideration of permeate recovery rate optimization in seawater RO processes equipped with centrifugal high-pressure pumps and PX Pressure Exchanger energy recovery devices. Optimization models are developed using practical process controls as independent variables. Modeling results are verified with process data collected at the Alicante seawater RO plant.

I. INTRODUCTION

In a reverse osmosis desalination process, the recovery rate or conversion rate is the ratio of membrane permeate flow rate to the membrane feed flow rate. Historically, these processes were operated at the highest possible recovery rate to obtain the maximum amount of permeate possible from the pressurized membrane feed water. However, the introduction of "isobaric" or pressure-equalizing energy recovery devices (ERDs) changed this practice (1).

In a seawater reverse osmosis (SWRO) process operating at a 45% recovery rate, isobaric ERDs supply 55% of the membrane feed flow, reducing the load on the high-pressure pump by a corresponding amount. Energy is consumed by a circulation pump that works in series with the ERDs, however, because the circulation pump merely circulates and does not pressurize water, its energy consumption is minimal. Therefore, more than half of the membrane feed flow is pressurized with almost no energy input. This means that seawater RO processes with isobaric ERDs can operate affordably at lower permeate recovery rates compared to processes operating with no energy recovery devices or with turbine-based devices. As a result, in most seawater RO processes being built today, such as the SWRO plant built and operated by Inima in Alicante, Spain ("the Alicante plant"), isobaric ERDs and a recovery rate of between 40% and 45% are applied to save energy.

Isobaric ERDs allow the flow rates of the high- and low-pressure streams through the devices to be unequal or unbalanced. As a result, the membrane recovery rate and the overall process recovery rate can be adjusted independently. This feature adds a degree of freedom that can result in further reductions in energy consumption and/or process yield improvement. This paper considers recovery rate optimization for the Alicante plant.

II. ALICANTE PLANT OVERVIEW

Alicante is a city of approximately 350,000 people located in southeastern Spain south of Valencia. The desalination plant is located on the coast just south of the city. Alicante II was commissioned in April 2008. It is the second membrane desalination facility built on the site, the first having been put in operation in 2003. Alicante II was designed and built by Spanish original equipment manufacturer Inima of Grupo OHL, Construcciones Alpi and Sampol..

The plant is fed from beach wells. The high-pressure portion of the plant consists of seven independent SWRO trains with a combined permeate production capacity of 65,000 m^3/day. Each train has 128 vessels of Dow Filmtec membranes, with six SW30HRLE-400i elements plus one SW30XLE-400i element per vessel. The trains are fed with Flowserve 8 x 10 x 13 DMX axially-split double-volute pumps driven by a Siemens 1100 kW, 2,980 rpm, 6000 volt motors. Each train is also equipped with a Flowserve 8HHPX15C horizontal circulation/booster pump with a 90 kW, maximum maximum 1,475 rpm, 400 volt motor equipped with a variable speed drive (VSD). A photograph of one of the SWRO trains is given in Figure 1.

Figure 1 – High Pressure Pump, Circulation Pump and Membrane Array

Energy recovery is achieved with arrays of twelve ERI PX-220 devices dedicated to each SWRO train. In Alicante, the PX devices are installed in the piping run below the membrane arrays, as shown in Figure 2.

Figure 2 – PX Energy Recovery Device Array

PX energy recovery devices (ERDs) are positive displacement isobaric devices commonly used in SWRO processes built since 2003 (2). Pressure transfer occurs through direct contact between the high-pressure concentrate and pressurized seawater inside the devices. Because there are no pistons or

barriers in the flow paths, high- and low-pressure flow rates through the devices can be manipulated freely.

The Alicante plant started production in April 2008. The plant was designed to operate at a 45% recovery rate with sufficient capacity in the energy recovery device arrays and circulation pumps to operate at a recovery rate of as low as 39% if desired. At 45% recovery, each train is designed to produce 411 m^3/hr of permeate for a nominal plant production capacity of 65,000 m^3/day.

Shortly after startup, fouling struck the membranes. This increased the membrane feed pressure by about 4 bar and decreased permeate production. When it was realized that the fouling was persistent and unavoidable, the recovery rate of the SWRO process was lowered to approximately 40%. Lowering recovery lowered the membrane feed pressure resulting in an increase in permeate production to the design flow rate.

After their success with recovery adjustment, the plant operations team was open to consider further optimization of SWRO system flows. A recovery optimization model was developed and run over a range of process conditions. The model results were verified with tests run on the system. A detailed description of the analysis and results is given in the following sections.

III. RECOVERY OPTIMIZATION

To explain recovery and how it is adjusted, a simplified process flow diagram is shown in Figure 3. Concentrate rejected by the membranes (stream G) flows to the ERDs, driven by a circulation pump. The ERDs replace the concentrate with feedwater from the low-pressure supply system (streams A and B). The pressurized feedwater (stream D) merges with the discharge of the high-pressure pump (stream C) to feed the membranes (stream E). Water leaves the process as permeate from the membranes (stream F) or as spent low-pressure concentrate from the ERDs (stream H). In these systems, the high-pressure pump flow rate equals the permeate flow rate plus the leakage loss through the ERD. The leakage loss is very small such that the permeate flow rate and the high-pressure pump flow rate are always nearly equal (2).

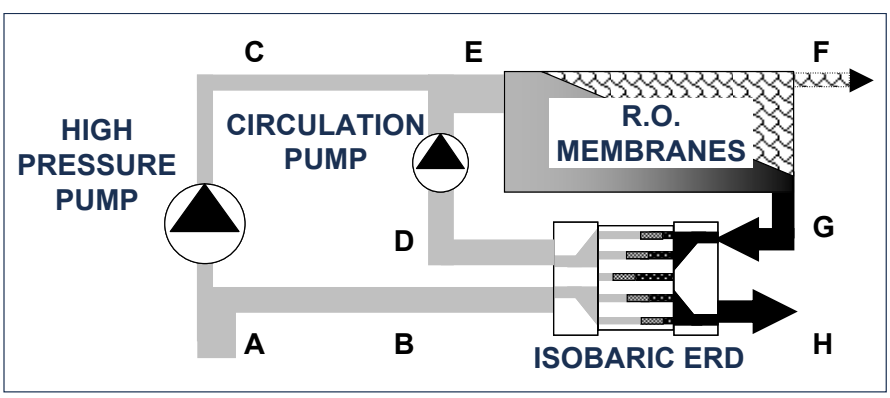

Figure 3: Simplified Diagram of an RO Process with Isobaric ERDs

With reference to Figure 3, the following terms are defined:

Membrane Recovery Rate – Permeate flow rate divided by the membrane feed flow rate or F / E.

Overall Recovery Rate – Permeate flow rate divided by the system feed flow rate or F / A.

Balanced ERD Flows – Flow rate of low pressure water fed to the ERD equals flow rate of high pressure water taken from the ERD or B = D and G = H. At balanced flow, membrane recovery and overall recovery are equal.

Lead Flow – Ratio of low-pressure flow rate to ERD divided by high-pressure flow rate from ERD, set by adjustment of low-pressure flow rate. A positive lead flow occurs when B > D.

Lag Flow – Ratio of high-pressure flow from ERD divided by low-pressure rate to ERD, set by adjustment of high-pressure flow rate. A positive lag flow occurs when D > B.

The membrane recovery rate, also known as the conversion rate, quantifies the amount of permeate extracted from the membrane feed. This, in turn, determines the concentration of the dissolved solids in the membrane reject stream. At high membrane recovery rates, the osmotic pressure of the concentrate stream is high, resulting in a high membrane feed pressure. Membrane recovery rate can be manipulated by altering the circulation pump speed. This, in turn, alters the membrane feed flow rate and changes the denominator in equation that defines the membrane recovery rate.

Lead or lag flow can be imposed by adjusting the low-pressure flow rate through the ERDs or by adjusting the speed of the circulation pump, respectively. However, for the sake of clarity in this analysis, the term lead flow will be used to refer to adjustments made by changing just the low-pressure flow rate through the ERDs. Therefore, positive or negative lead flows will be considered. Lag flow will be used throughout this analysis to refer to flow adjustments made by changing just the circulation pump speed. Positive and negative lag flows will be considered.

Some mixing occurs in the ERDs as a result of the direct contact between seawater and concentrate inside the devices. The ratio of ERD flows has a distinct affect on mixing as illustrated in Figure 4. If operated at positive lead flow, the excess seawater fed to the ERDs flushes the devices and reduces the salinity of the high-pressure water flowing from the devices. Negative lead flow results in some breakthrough of the concentrate to the high-pressure water flowing from the devices, evident as an increase in mixing. Lag flow has a similar affect on ERD mixing with a negative lag flow resulting in reduced mixing. Reduced mixing, in turn, results in lower salinity in the membrane elements and a corresponding reduction in the osmotic and membrane feed pressures.

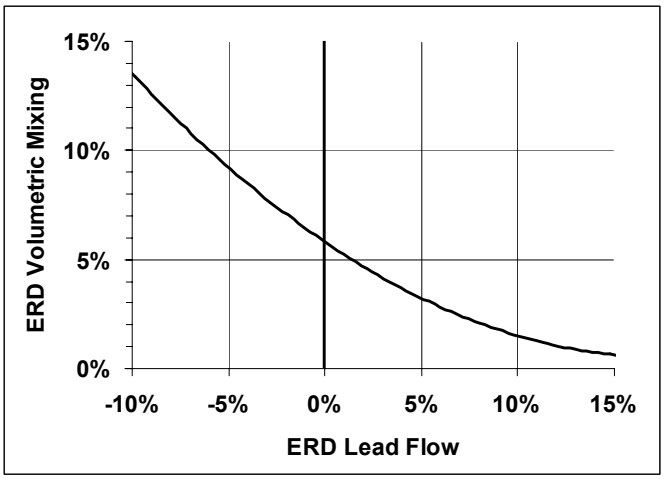

Figure 4 – ERD Mixing Versus Lead Flow

IV. PROCESS MODEL

The Alicante plant SWRO process was modeled using the characteristic curves of the high-pressure pump, the circulation pump, the membranes and the ERDs. Figure 5 shows the high-pressure pump curve, with head plotted as a function of flow. Adjustment of the high-pressure pump feed pressure, high-pressure throttling or permeate throttling can shift the pump curve up or down the chart. The duty point of the pump, however, always stays on the curve. For example, higher membrane feed pressure results in a lower flow rate as the duty point moves to the right and down the chart.

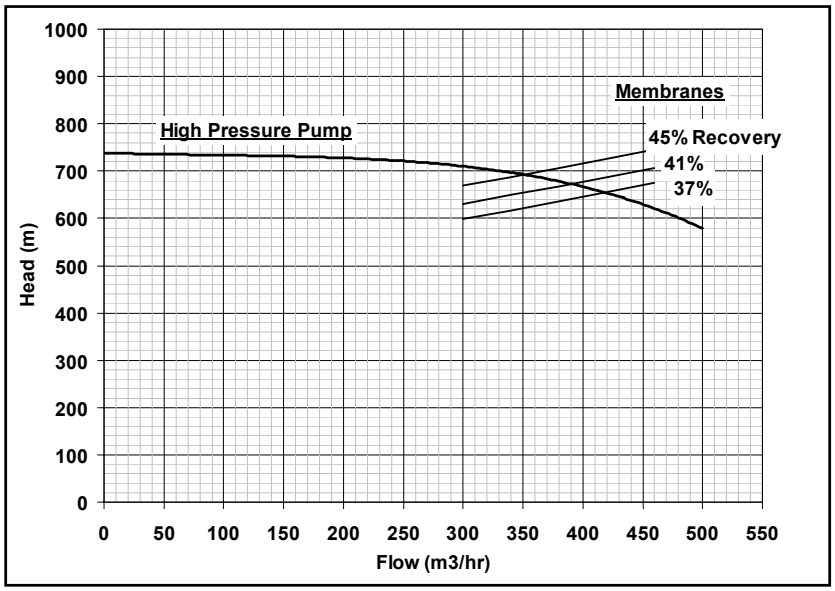

Figure 5 – High-Pressure Pump and Membrane Characteristic Curves

Membrane responses from the projection software for three different recovery rates were superimposed on the high-pressure pump curve in Figure 5. It is valid to consider these curves on the same chart because the high-pressure pump flow rate and the permeate rate are always nearly equal as described

above. The membrane curves indicate that increased feed pressure results in higher permeate flow rates. These curves also indicate that higher pressures are required at higher recovery rates. Seawater temperature, seawater salinity and membrane fouling shift the membrane curves up or down the chart. The process operates at the pressure and flow rate where the membrane curve and the pump curve intersect.

Two characteristic curves for the circulation pump are given in Figure 6, corresponding to two different pump and motor rotation speeds. Although the duty point of the circulation pump always stays on a flow-head curve, adjustment of the VSD allows the operator to shift pump duty point from one curve to another. Therefore, the circulation pump can essentially be operated at any combination of flows and pressures within the operating envelope provided by the pump, motor and VSD. The circulation pump drives flow through the membrane concentrate channels and the ERDs such that the operation of these elements is coupled.

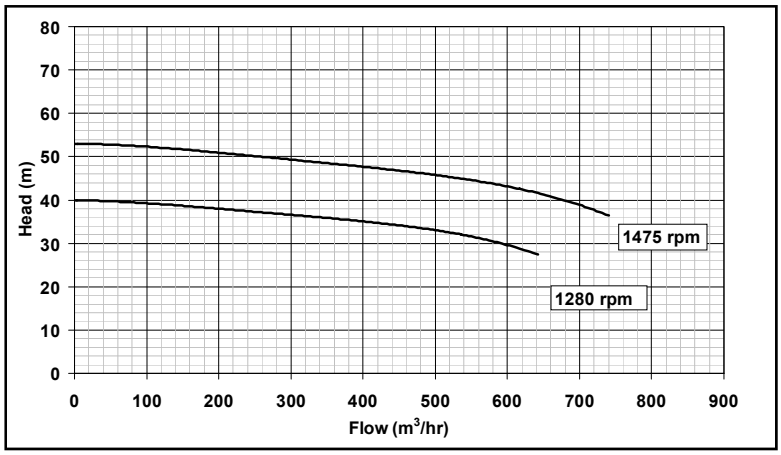

Figure 6 – Circulation Pump Characteristic Curves

The performance of the ERDs is also described by characteristic curves. These are shown in Figure 7 for a model PX-220 device. The flow rates through the ERD determine the pressure drops along the high-pressure and low-pressure flow paths. Conversely, with multiple ERDs operating in a device array, the flow rate through a particular device is determined by the pressure difference between the inlet and outlet manifolds at the manifold positions of the ERD (3). The ERD high-pressure flow is driven by the circulation pump and the low-pressure flow by the low-pressure supply pump.

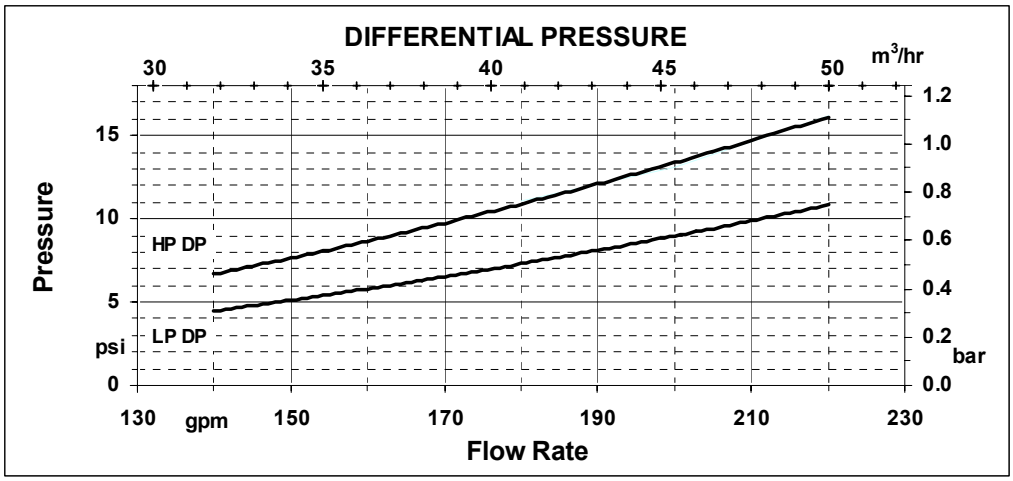

Figure 7 – PX-220 ERD Characteristic Curves

Resolution of the SWRO operating point for a given set of flow, pressure, salinity and temperature conditions involves the simultaneous consideration of the characteristic curves of the pumps, membranes and ERD. It is, therefore, an iterative computational process. After the system flows, pressures and corresponding pump hydraulic output requirements are determined, the energy consumption of the pump motors are computed using the pump and motor efficiencies (4, 5).

4.1 Lead Flow Modeling Results

Modeling results for a range of system recovery and membrane recovery combinations under lead flow conditions are shown in Figure 8. Specific energy in Figure 8 is the sum of the supply pump, the circulation pump and the high-pressure pump energy consumption divided by the SWRO permeate flow rate. Lead flow and overall recovery were adjusted by changing the low-pressure flow rate through the ERDs while holding constant the high-pressure flow rate of the circulation pump.

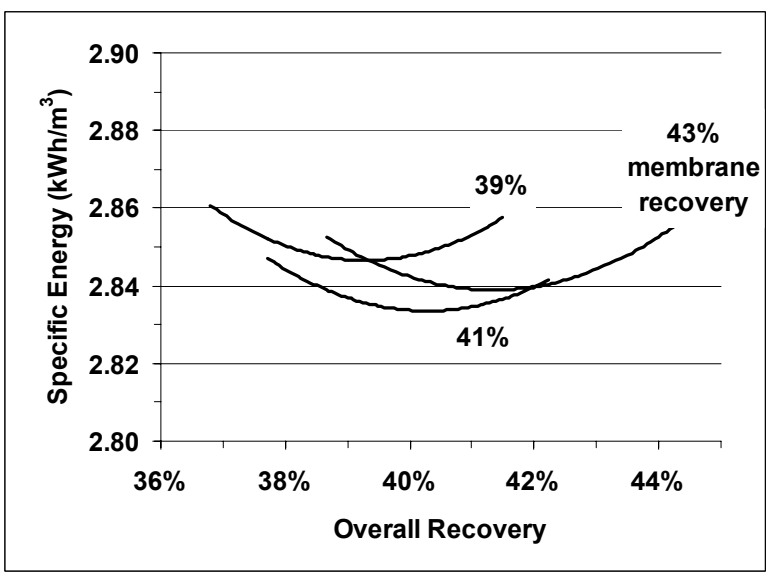

Figure 8 – Lead Flow Modeling Results

Considering any of the membrane recovery curves shown in Figure 8, as overall recovery is increased with reduced seawater fed to the ERDs, energy consumption by the high-pressure pump increases. This energy consumption increase corresponds with the increase in salinity in the membrane feed caused by extra mixing in the ERD in accordance with Figure 4. As overall recovery is reduced with extra seawater fed to the ERDs, excess energy is consumed by the system supply pump. The optimum overall recovery rate corresponding with the lowest SWRO specific energy consumption, therefore, is achieved by optimizing the low-pressure flow rate supplied to the ERDs by the supply pump.

At 41% membrane recovery, minimum energy consumption is predicted to occur at an overall recovery rate of nearly one percent less than the membrane recovery rate, corresponding to positive lead flow. At 43% membrane recovery, the optimal low-energy point is at an overall recovery rate that is about 1.5% lower than the membrane recovery, corresponding to more positive lead flow. At 39% membrane recovery, the optimal overall recovery is above 39%, corresponding with slight negative lead flow.

These data suggest that the system has a "sweet spot" close to 41.5% membrane recovery and 41% overall recovery. These recovery rates are close to balanced flow with 2% extra low-pressure seawater supply or 2% lower concentrate flow. If the membrane recovery is increased above 41.5% by reducing circulation pump speed, specific energy consumption can be reduced by reducing overall recovery by applying more low-pressure flow to the ERDs. Similarly, if the system is operating at a lower-than-optimal membrane recovery, overall recovery can be increased slightly by reducing low-pressure flow to the ERDs to reduce energy consumption.

It is important to note that this analysis does not take into account the full cost of pretreatment, the capacity of the pretreatment system or the energy or cost required for post-treatment. Recovery optimization requires consideration of equipment, contractual and cost constraints. For example, there is insufficient pretreatment capacity to allow the entire plant to operate at 41% recovery. However, the analysis does take into account changes in mixing through the ERDs and the associated impact upon membrane feed pressure. Volumetric mixing ranges from 2 to 13% in the data presented in Figure 8 in accordance with the lead flow dependency given in Figure 4.

4.2 Lag Flow Modeling Results

A similar iterative procedure was used to resolve the characteristic equations of the components to generate specific energy curves for a range of overall and membrane recovery rates for lag flow conditions. Lag flow and membrane recovery were adjusted by just changing circulation pump speed. For example, increased circulation pump speed resulted in positive lag flow and reduced membrane recovery. The results are shown in Figure 9.

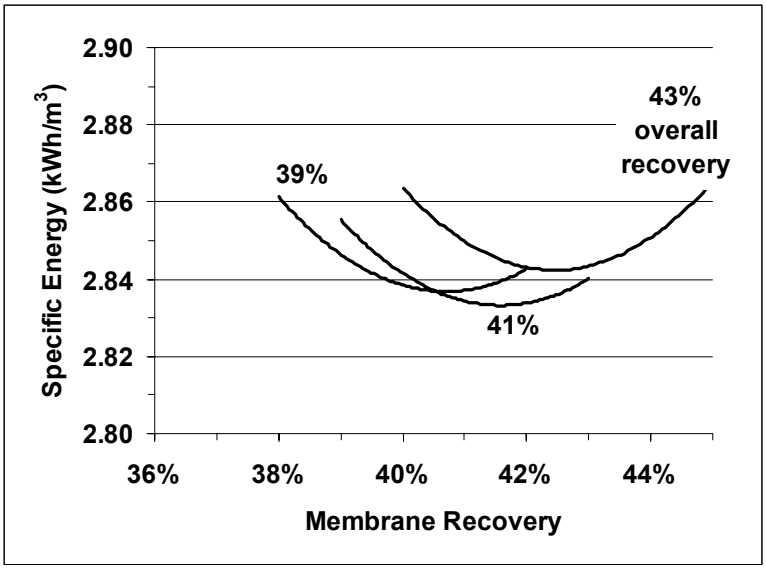

Figure 9 – Lag Flow Modeling Results

The overall trend of the data for the lag flow modeling was similar to the lead flow data. Considering any of the overall recovery curves, positive lag flow and reduced membrane recovery increased energy consumption by raising the salinity of the membrane feed and the corresponding duty of the high-pressure pump. Negative lag flow and increased membrane recovery increased energy consumption by raising the osmotic pressure within the membrane array. The optimum membrane recovery rate corresponding with the lowest overall specific energy consumption, therefore, is achieved by optimizing the high-pressure flow rate supplied to the ERDs by the circulation pump. As in the lead flow analysis, the "sweet spot" is at about 41.5% membrane recovery and 41% overall recovery.

Note that the overall recovery curves in the lag flow modeling results are more curved than the lead flow curves when the system is shifted away from its minimum energy points. Circulation pump speed changes alter both the mixing within the ERD and the salinity within the membrane elements. The compound affect of membrane recovery rate changes results in the steep curves in Figure 9. These results show that the process is more sensitive to the high-pressure flow rate through the ERDs than it is to the low-pressure flow rate through the ERDs.

It should also be noted that the overall range in specific energy indicated in Figures 8 and 9 is about 1.4% despite a variation in ERD flow of nearly 30%. This suggests that the system's energy performance is robust and somewhat insensitive to flow imbalance through the ERD. The optimization exercise described above is "fine tuning." However, its importance is magnified when multiple years of operation and multiple SWRO trains are considered. In the Alicante plant, if the price of power is $0.09 per kilowatt hour, a 1.4% reduction in energy consumption would save nearly $90,000 per year in power costs.

Again, it is important to note that this analysis does not take into account equipment, contractual and cost constraints which may shift the optimal recovery rate of the process. However, the trend of the results can be useful for process optimization at any recovery rate. For example, if the process is operated at an overall recovery rate of 45%, the analysis above suggests that reducing the membrane recovery rate to below 45% will improve specific energy consumption. This can be achieved by

increasing the speed of the circulation pump with no other changes to the process. Conversely, at overall recovery rates below 41%, increased membrane recovery rates and lower circulation pump speeds are energetically favored.

V. PROCESS PERFORMANCE

Between when the analysis above was conducted and process performance data was collected, several changes were made to the process. First, a partial open intake was added to the beach wells resulting in a decrease in the average salinity of the feedwater to the process from about 42,300 to about 39,300 ppm and reducing membrane feed pressure by about 1 bar. Second, the membranes of some SWRO trains were chemically treated to address the fouling problem resulting in a membrane feed pressure reduction of approximately 2 bar. Both of these changes reduced the specific energy consumption of the process compared to the energy consumption measured at the start of the analysis and predicted by the model.

Process data was collected in the Alicante plant from the SCADA screen in the plant control room at 41 and 43.5% overall recovery. The circulation pump speed or the low-pressure feed rate to the PX devices was varied and pump power consumption was measured. ERD efficiency ranged from 96.6 to 97.2% and volumetric mixing ranged from 3.6 to 10.6%. Specific energy data as a function of recoveries is shown in Figure 10. The curve identified as "43.5% overall recovery" was collected on a train that had received chemical treatment for fouling.

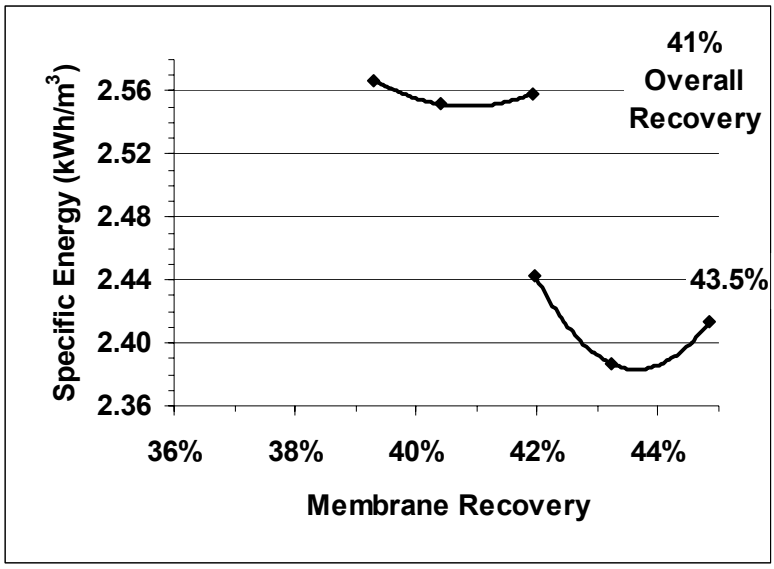

Figure 10 – Process Data

These data clearly demonstrate the energy reduction benefits of the feedwater and membrane changes. The data also suggest that the lowest specific energy was measured when the membrane recovery and overall recovery were set equal, at which point the ERDs were operating at balanced flow. However, the change in specific energy consumption and the ERD efficiency measured over the range of the membrane recovery rates examined was minimal despite the rather large range of mixing observed from the ERDs. This observation supports the conclusion that SWRO processes operating with isobaric ERDs are relatively insensitive to flow and flow ratio variations through the ERDs.

VI. SUMMARY AND CONCLUSIONS

The isobaric energy recovery devices in use in the Alicante plant gave the operators the flexibility to reduce recovery to achieve the plant's permeate production target despite persistent fouling that increased the membrane feed pressure. In addition, the PX devices used for energy recovery in the plant allow the operators to adjust the ratio of high- and low-pressure flows through the devices and thereby independently adjust the membrane recovery rate and overall recovery rate of the process. An analysis of the system over a range of recovery rates reveals the existence of a specific combination of overall and membrane recovery rates that results in minimum energy consumption. The analysis indicates how the membrane recovery rate could be adjusted to minimize energy consumption at whatever overall recovery rate that plant is operating. The results of the analysis were corroborated with process data.

VII. REFERENCES

1. MacHarg, J.P. and G.G. Pique, How to Design and Operate SWRO Systems Built Around a New Pressure Exchanger Device, International Desalination Association World Congress Manama, Bahrain 2002.

2. Stover, R.L., Development of a Fourth Generation Energy Recovery Device – A CTO's Notebook, Desalination, 165, pp. 313-321, August 2004.

3. Stover, R.L., J.G. Martin and M. Nelson, The 200,000 m^3/day Hamma Seawater Desalination Plant, Proceedings of the International Desalination Association World Congress, Maspalomas, Gran Canaria, Spain, October 2007.

4. Moch, I. and C. Harris, What Seawater Energy Recovery System Should I Use? – A Modern Comparative Study, Proceedings of the International Desalination Association World Congress, Manama, Bahrain, March 2002.

5. Stover, R.L., Energy Recovery Device Performance Analysis, Proceedings of the Water Middle East Conference, Bahrain, November 2005.

Quarterly Technical Progress Report
Covering Period October 1, 2009 to December 31, 2009
Date of Report 2-2-11

Agreement Number:	4600007440
Subject:	Prop 50 II Desal 46-7440 P-04 ADC
DWR ID Number:	n/a Department of Water Resources Office of Water Use Efficiency 901 P Street, Third Floor Sacramento, CA 95814
Project Title:	Optimizing Seawater Reverse Osmosis for Affordable Desalination
Recipient Organization:	Affordable Desalination Collaboration 2419 E. Harbor Blvd, #173 Ventura, CA 93001
Partners:	See attached membership list.
Contact Person:	John MacHarg 2419 E. Harbor Blvd, #173 Ventura, CA 93001 Tel: 650-283-7976 Fax: 805-658-8060 e-mail: jmacharg@affordabledesal.com
Date Submitted:	2-2-11

_____
Signed, Reviewed by designated representative

1. **Project Objective:** The objectives of the Affordable Desalination Collaboration (ADC) are to demonstrate affordable, reliable and environmentally responsible reverse osmosis desalination technologies and to provide a platform by which cutting edge technologies can be tested and measured for their ability to reduce the overall cost of the seawater reverse osmosis (SWRO) treatment process.

2. **Project Description / Background:** A key challenge facing the seawater desalination industry today is to develop a new generation of reverse osmosis (RO) plants that deliver high-quality, fresh water at a reduced economic and environmental cost. The key to achieving these goals is to address the most

expensive and environmentally taxing component of operating a desalination system: energy.

The ADC was formed in 2004 to fund and execute the first part of a multiple phase Affordable Desalination Demonstration Project. The ADC members are a group of leading government agencies, municipalities, RO manufacturers, consultants and professionals partnering together to help reduce the costs associated with desalination.

The first phase of the project, ADC I, built and operated a demonstration plant at the United States Navy's Seawater Desalination Test Facility in Pt. Hueneme, California. The plant utilized a combination of proven technologies developed primarily in the U.S. and California to demonstrate that seawater desalination can be optimized to make it technically and economically viable. ADC I achieved remarkable results by desalinating seawater at energy levels between 6.0-6.9 kWh/kgal (1960-2250 kWh/acre-ft). On average, these numbers make the power for desalination comparable to the power required for the State Water and the Colorado River Aqueduct projects and they are approximately 35% lower than experts had been projecting for seawater desalination. For the approximate 100 mgd of proposed seawater desalination projects in Southern California alone, this 35% savings equates to approximately 140,000 Mega Watt hours in energy savings per year.

This second phase (ADC II) will pursue the following demonstration, and development programs.

a. Test and demonstrate additional manufacturers' membranes through a protocol similar to Phase I.
b. Test and demonstrate DOW FILMTEC's next generation "hybrid-membrane".
c. Develop and demonstrate new process designs that are possible as a result of the isobaric energy recovery technologies. We will use the ADC pilot system to test and demonstrate these new flow schemes in order to push the recoveries above 50%, while still maintaining good water quality and low energy performance.
d. Test and demonstrate ZENON ultra-filtration technology ahead of our ADC pilot system. This portion of the test should build on and compliment the other pre-filtration studies that are taking place in the region.
e. Test and demonstrate Ocean Pacific Technology's (OPT) Axial Piston Pressure Exchanger (AP^2X) pump technology.

Below are the additional test items related to our no-cost extension request dated 7-23-08

f. Re-run Toray test due to un-explained step change reduction in performance during first test.

g. Test and demonstrate additional set of DOW-FILMTEC - SW30XHR-400i high boron rejection membranes to demonstrate better water quality and higher Boron rejection than previously tested DOW membranes.
h. Test and demonstrate additional set of high rejection Koch membranes to demonstrate better water quality than previously tested Koch Membranes.
i. Test and demonstrate Amiad's Micro Fiber pre-filtration technology that promises to reduce the cost and foot print compared to current media filter and advanced filtration technologies.
j. Test and demonstrate new X-pump and energy recovery technology that promises significant energy reductions for medium sized SWRO systems and will be simpler to apply and operate compared to traditional pump and isobaric technologies.

Thus far we have completed the five sets of manufacturers' membrane testing that including the Toray TM800C membrane test and retest (Task 2 and 6), the Koch 2822HF-400 membrane test (Task 3) and the Hydranautics SWC5 membrane (Task 4), DOW-FIMTEC Hybrid (Task 5) and the DOW-FILMTEC - SW30XHR-400i high boron rejection membranes (Task 7). In addition, we have completed the Unbalanced High Recovery Testing (Task 9).

- Start Date of Contract: April 2, 2007
- End Date of Contract: June 30, 2010

3. Progress and Status:

During Q4-09 we completed the final demonstration of the Zenon 1000 system (Task 1) as well as the Amiad Fiber Filter Demonstration (Task 12). In addition to operating the above systems in Q4 we decommissioned the ADC's main SWRO demonstration unit.

4. Percent Complete of Total Project: ~ 95%

5. Deliverables:

Trade Show/Conference/Publication	Date(s)	Author(s)	Presenter	DWR Submittal
Optimizing Lower Energy Seawater Desalination, The Affordable Desalination Collaboration	Nov-2009	Stephen Dundorf, John MacHarg, Bradley Sessions, Thomas F. Seacord	Stephen Dundorf	Q3-09
Permeate Recovery Rate Optimization at the Alicante Spain SWRO Plant	Nov-2009	Richard Stover, Antonio Ordonez Fernandez, Joan Galtes	Richard Stover	Q3-09
ADC Presentation at CA-NV-AWWA Desal Workshop	June-2009	John MacHarg	John Macharg	Q2-09
ADC Presentation UCLA Work shop	Feb-2009	n/a	John MacHarg	Q1-09
Water Scarcity UNESCO UC Irvine	Dec-2008	John MacHarg	John MacHarg	Q4-08

ADC Base Lines SWRO System Performance, Water and Desalination Report	September 2008	John MacHarg, Tom Seacord, Bradley Sessions	n/a	Q3-08
Joint ADC-AMTA-SEDA workshop, Annual Conference, Naples, FL	July 2008	ADC-AMTA-SEDA	Various	Q3-08
ADC Completes Profile of SWRO Press Release	March 28, 2008	ADC	n/a	Q1-08
IDA World Conference, Gran Canaria, ADC II Update	October 21-26, 2007	Stephen Dundorf, Thomas F. Seacord, John MacHarg	Stephen Dundorf	Q3-07
Desalination and Water Reuse (DWR) Quarterly, Innovative Designs to be Tested in ADC II	Aug/Sept-07	John P. MacHarg	n/a	Q3-07
AMTA 2007 Annual Conference, Las Vegas, ADC I 10 mgd Application	July 23-27, 2007	Bradley Sessions, Tom Seacord, P.E.	Tom Seacord	Q2-07
AWWA Membrane Technology Conference, Tampa Florida, Collier County results	March 18-21, 2007	Brandon Yallaly, P.E., Tom Seacord, P.E., Steve Messner	Brandon Yallaly	Q2-07

6. **Expenditures:** See next page.

Affordable Desalination Collorboration
State of California Water Board Report
Quarter ending December 31, 2009

		Balances September 30, 2009			Q 4 Expenditures			Balances December 31, 2009		
	Budgetary Category (I)	Non State Share (II)	State Share (Grant) (III)	Total Project Costs (IV) = (II+III)	Non State Share (II)	State Share (Grant) (III)	Total Project Costs (IV) = (II+III)	Non State Share (II)	State Share (Grant) (III)	Total Project Costs (IV) = (II+III)
(a)	Administration									
	Salaries, wages	$ -	$ 41,863	$ 41,863		$ 17,250	$ 17,250	$ -	$ 24,613	$ 24,613
	Fringe benefits	$ -	$ 13,465	$ 13,465		$ 4,901	$ 4,901	$ -	$ 8,564	$ 8,564
	Supplies	$ -	$ 1,801	$ 1,801		$ 1,305	$ 1,305	$ -	$ 496	$ 496
	Equipment	$ -	$ 1,000	$ 1,000			$ -	$ -	$ 1,000	$ 1,000
	Consulting services	$ (25,000)	$ 6,305	$ (18,695)			$ -	$ (25,000)	$ 6,305	$ (18,695)
	Travel	$ (3,027)	$ 1,178	$ (1,848)			$ -	$ (3,027)	$ 1,178	$ (1,848)
(b)	Planning/design/engineering	$ (10,500)	$ 1,909	$ (8,591)			$ -	$ (10,500)	$ 1,909	$ (8,591)
(c)	Equipment purchases/Rentals/Rebates/Vouchers	$ 4,250	$ 8,000	$ 12,250			$ -	$ 4,250	$ 8,000	$ 12,250
(d)	Materials/Installation/Implementation	$ 69,000	$ 0	$ 69,000	$ 10,500		$ 10,500	$ 58,500	$ 0	$ 58,500
(e)	Implementation verification	$ 7,500	$ 2,500	$ 10,000			$ -	$ 7,500	$ 2,500	$ 10,000
(f)	Project legal/License/Insurance fees	$ -	$ 2,500	$ 2,500			$ -	$ -	$ 2,500	$ 2,500
(g)	Structures	$ -	$ -	$ -			$ -	$ -	$ -	$ -
(h)	Land Purchase/Easement	$ -	$ -	$ -			$ -	$ -	$ -	$ -
(i)	Environmental Compliance/Mitigation/Enhancement	$ -	$ -	$ -			$ -	$ -	$ -	$ -
(j)	Construction	$ -	$ -	$ -			$ -	$ -	$ -	$ -
(k)	Other (Operating Cash)	$ -	$ -	$ -			$ -	$ -	$ -	$ -
(l)	Operation, monitoring and assessment	$ -	$ 17,542	$ 17,542		$ 9,730	$ 9,730	$ -	$ 7,812	$ 7,812
(m)	Report preparation	$ 2,000	$ 2,500	$ 4,500			$ -	$ 2,000	$ 2,500	$ 4,500
(n)	Outreach and information sharing	$ (7,235)	$ -	$ (7,235)	$ 11,248		$ 11,248	$ (18,483)	$ -	$ (18,483)
(o)	Subtotal	$ 48,236	$ 144,129	$ 192,365	$ 21,748	$ 33,186	$ 54,934	$ 15,240	$ 67,378	$ 82,618
(p)	Overhead (8%)	$ -	$ 37,907	$ 37,907		$ 2,655			$ 35,252	$ 35,252
(q)	Contingency (10%)	$ -	$ 18,879	$ 18,879		$ -			$ 18,879	$ 18,879
(r)	Total (o+p+q)	$ 48,236	$ 200,914	$ 249,150	$ 21,748	$ 35,840	$ 54,934	$ 15,240	$ 121,509	$ 136,749

7. **Schedule Status:** We had operated on schedule through Q4-09.

8. **Plans for Next Quarter:** In Q1-10 we will finish all operational tasks and the decomissioing of all systems including the Zenon 1000 and Amiad units.

9. **Attachments:** n/a

All quarterly reports should be publicly disclosable and not contain confidential, proprietary or business sensitive information.

Task and % Complete Progress Table

Agreement Number	Starting Date:	Completion Date:	Quarter-Year	Report Number	PERCENT OF
4600007440	4.2.07	6.30.10	Q4-2009	11	
Grantee Agency Name: Affordable Desalination Collaboration		% Time Elapsed 88%	Total Grant Funds used $ 878,491	Grant funds this Qtr $ 35,840	
Name of Project: Optimizing Seawater Reverse Osmosis for Affordable Desalination					

TASKS	YEAR / MONTH	2008 Qtr 3	2008 Qtr 4	2009 Qtr 1	2009 Qtr 2	2009 Qtr 3	2009 Qtr 4	Project	Task Complete Last Report	Task Complete This Report	Project Complete
Task 1: Zenon 1000 pilot demonstration							Complete	12	70	30	12
Task 2: Toray low energy membrane demonstration		Complete						10	100	0	10
Task 3: Koch low energy membrane demonstration		Complete						10	100	0	10
Task 4: Hydranautics low energy membrane demonstration		Complete						10	100	0	10
Task 5: Dow-FILMTEC hybrid membrane demonstration		Complete						10	100	0	10
Task 6: TorayTM800C low energy membrane demonstration (re-test)		Complete						10	100	0	10
Task 7: DOW FILMTEC high Boron rejection memb. demonstration				Complete				10	100	0	10
Task 8: Koch high rejection memb. demonstration		Canceled						0	0	0	0
Task 9: Unbalanced PX high recovery testing							Complete	15	100	0	15
Task 10: Interstage-PX hybrid high recovery testing		Canceled						0	0	0	0
Task 11: Demonstrate OPT's APX pump and energy recovery system		Canceled						0	0	0	0
Task 12: Amiad Fiber Filter Test							Complete	8	90	10	8
Show Progress by Use of Bar Chart	**Scheduled =**							100			100
	Completed =										

Notes: 1. Since we have been operating significantly under budget, we have received approval to add tasks 6, 7, 8, 11 and 12 to the task list. These additional items will extend the project schedule from the current December 2008 end date through Feb- 2010. The additional tasks and subsequent extension to the schedule will not result in an increase to the State Share/grant ie. no cost extension.

Schedule

ADC Actual "As Tested" Project Schedule

ID	Task Name	Duration	Start	Finish
1	Agreement development	168 days	Tue 8/1/06	Thu 3/22/07
2	Final agreement signed	5 days	Fri 3/23/07	Thu 3/29/07
3	Project begins	1 day	Mon 4/2/07	Mon 4/2/07
4	**TorayTM800C low energy membrane demonstration**	**51 days**	**Mon 4/30/07**	**Mon 7/9/07**
5	Install Toray TM800C Membranes	2 days	Mon 4/30/07	Tue 5/1/07
6	TM800C Ripening period	15 days	Wed 5/2/07	Tue 5/22/07
7	TM800C 9 flux and recovery points	18 days	Wed 5/23/07	Fri 6/15/07
8	TM800C Most affordable point	15 days	Mon 6/18/07	Fri 7/6/07
9	Complete Toray TM800C testing	1 day	Mon 7/9/07	Mon 7/9/07
10	Submit project update report to DWR	5 days	Mon 7/9/07	Fri 7/13/07
11	**Koch low energy membrane demonstration**	**88 days**	**Tue 7/10/07**	**Thu 11/8/07**
12	Install membranes	2 days	Tue 7/10/07	Wed 7/11/07
13	Ripening period	20 days	Thu 7/12/07	Wed 8/8/07
14	9 flux and recovery points	30 days	Thu 8/9/07	Wed 9/19/07
15	Most affordable point	35 days	Thu 9/20/07	Wed 11/7/07
16	Complete Koch testing	1 day	Thu 11/8/07	Thu 11/8/07
17	Submit project update report to DWR	5 days	Mon 9/17/07	Fri 9/21/07
18	Innovative PX flow schemes work shop	2 days	Thu 11/8/07	Fri 11/9/07
19	**Hydranautics low energy membrane demonstration**	**78 days**	**Fri 11/9/07**	**Tue 2/26/08**
20	Install membranes	2 days	Fri 11/9/07	Mon 11/12/07
21	Ripening period	20 days	Tue 11/13/07	Mon 12/10/07
22	9 flux and recovery points	25 days	Tue 12/11/07	Mon 1/14/08
23	Most affordable point	30 days	Tue 1/15/08	Mon 2/25/08
24	Complete Hydranautics testing	1 day	Tue 2/26/08	Tue 2/26/08
25	Submit project update report to DWR	4 days	Mon 1/21/08	Thu 1/24/08
26	**Zenon 1000 Pilot Demonstration**	**473 days**	**Mon 3/3/08**	**Wed 12/23/09**
27	Install and test Zenon System	18 days	Mon 3/3/08	Wed 3/26/08
28	Operate and monitor Zenon 1000 membrane pilot system	454 days	Thu 3/27/08	Tue 12/22/09
29	Complete Zenon testing	1 day	Wed 12/23/09	Wed 12/23/09
30	Submit project update report to DWR	4 days	Mon 3/17/08	Thu 3/20/08
31	**DOW Hybrid Membrane Demonstration**	**49 days**	**Wed 2/27/08**	**Mon 5/5/08**
32	Install DOW hybrid membranes	2 days	Wed 2/27/08	Thu 2/28/08
33	DOW Hybrid Ripening period	15 days	Wed 2/27/08	Tue 3/18/08
34	DOW Hybrid 9 flux and recovery points	18 days	Wed 3/19/08	Fri 4/11/08
35	DOW Hybrid Most affordable point	15 days	Mon 4/14/08	Fri 5/2/08
36	Complete DOW testing	1 day	Mon 5/5/08	Mon 5/5/08
37	Submit project update report to DWR	4 days	Mon 6/16/08	Thu 6/19/08

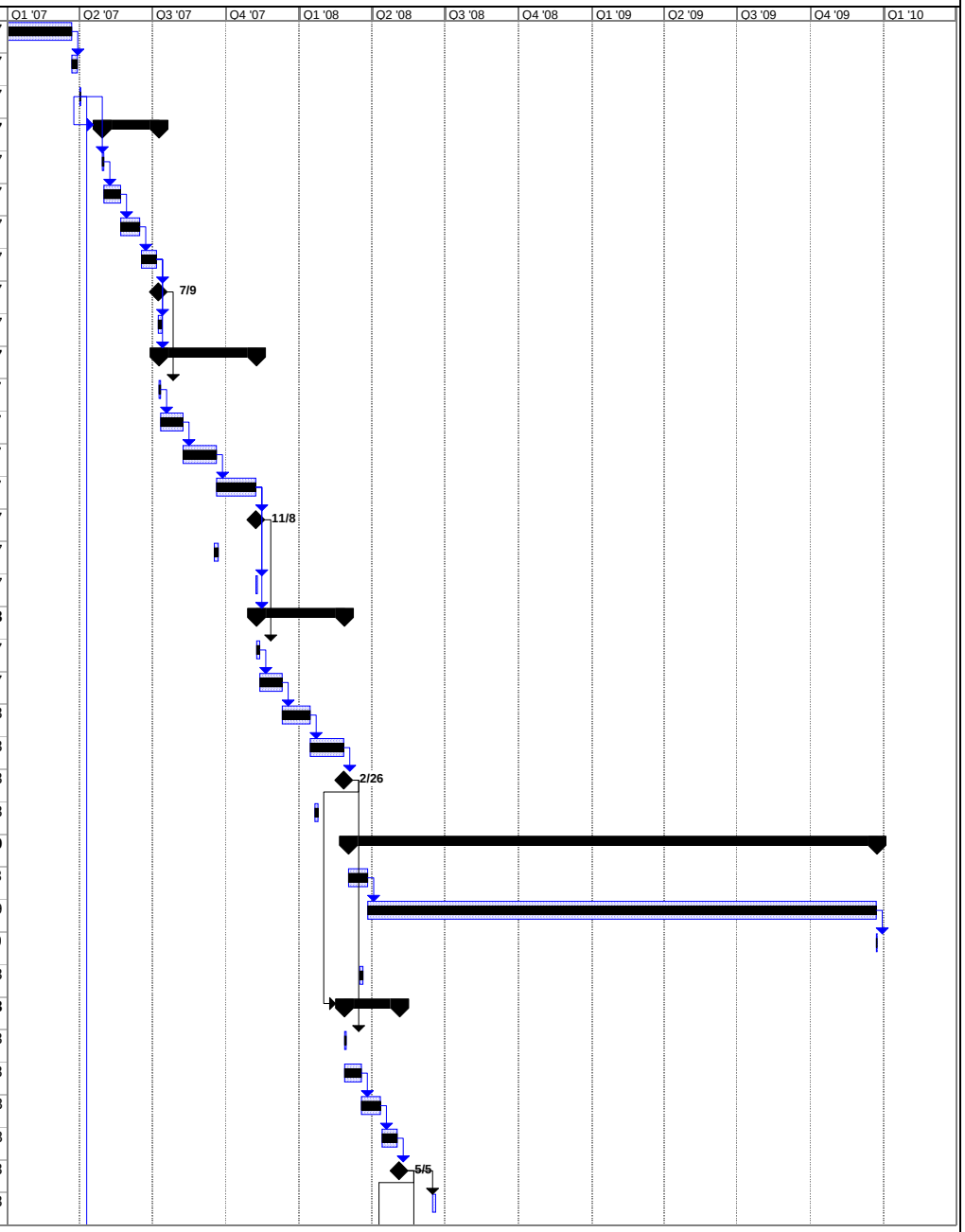

Project: ADC Prop 50 "As Tested" Proj
Date: Mon 2/7/11

Task		Summary		Rolled Up Progress		Project Summary	
Progress		Rolled Up Task		Split		Group By Summary	
Milestone		Rolled Up Milestone		External Tasks		Deadline	

ADC Actual "As Tested" Project Schedule

ID	Task Name	Duration	Start	Finish
38	***TorayTM800C low energy membrane demonstration (re-test)***	***51 days***	***Tue 5/6/08***	***Tue 7/15/08***
39	***Install Toray TM800C Membranes***	***2 days***	***Tue 5/6/08***	***Wed 5/7/08***
40	***TM800C Ripening period***	***15 days***	***Thu 5/8/08***	***Wed 5/28/08***
41	***TM800C 12 flux and recovery points***	***18 days***	***Thu 5/29/08***	***Mon 6/23/08***
42	***TM800C Most affordable point***	***15 days***	***Tue 6/24/08***	***Mon 7/14/08***
43	***Complete Toray TM800C testing***	***1 day***	***Tue 7/15/08***	***Tue 7/15/08***
44	NFESC shutdown due to intake capacity issues	57 days?	Mon 7/14/08	Tue 9/30/08
45	***DOW FILMTEC high Boron rejection memb. demonstration***	***65 days***	***Wed 10/1/08***	***Tue 12/30/08***
46	***Install DOW FILMTEC SW30XHR-400i Membranes***	***2 days***	***Wed 10/1/08***	***Thu 10/2/08***
47	***DOW FILMTEC SW30XHR-400 Ripening period***	***15 days***	***Fri 10/3/08***	***Thu 10/23/08***
48	***DOW FILMTEC SW30XHR-400 12 flux and recovery points***	***30 days***	***Fri 10/24/08***	***Thu 12/4/08***
49	***DOW FILMTEC SW30XHR-400 Most affordable point***	***30 days***	***Wed 11/19/08***	***Tue 12/30/08***
50	***Complete FILMTEC SW30XHR-400 testing***	***1 day***	***Wed 12/10/08***	***Wed 12/10/08***
51	Submit project update report to DWR	4 days	Fri 8/15/08	Wed 8/20/08
52	ADC-AMTA Member workshop and progress report	1 day	Mon 7/14/08	Mon 7/14/08
53	**Unbalanced PX high recovery testing**	**122 days**	**Sat 1/10/09**	**Tue 6/30/09**
54	Install PX flow scheme membrane set	2 days	Sat 1/10/09	Tue 1/13/09
55	Flush and base line membranes	10 days	Wed 1/14/09	Tue 1/27/09
56	Execute unbalance test protocol @ 18 points (mixing issues)	51 days	Fri 2/13/09	Fri 4/24/09
57	Execute unbalance test protocol @ 11 points (second set)	22 days	Wed 4/29/09	Thu 5/28/09
58	PX unbalanced most affordable point (24/7 for 1 months)	22 days	Fri 5/29/09	Mon 6/29/09
59	Complete Unbalanced PX testing	1 day	Tue 6/30/09	Tue 6/30/09
60	Submit project update report to DWR	4 days	Thu 1/15/09	Tue 1/20/09
61	Submit project update report to DWR	4 days	Mon 3/16/09	Thu 3/19/09
62	Submit project update report to DWR	4 days	Mon 6/15/09	Thu 6/18/09
63	***Demonstrate Amiad Fiber Filter Test***	***205 days***	***Mon 3/2/09***	***Fri 12/11/09***
64	***Install fiber filter unit***	***10 days***	***Mon 3/2/09***	***Fri 3/13/09***
65	***Operate system through "break-in and shakedown" period***	***20 days***	***Mon 3/16/09***	***Fri 4/10/09***
66	***Demonstrate Amiad technology 24/5***	***160 days***	***Mon 4/13/09***	***Fri 11/20/09***
67	***Complete Fiber Filter demonstration***	***15 days***	***Mon 11/23/09***	***Fri 12/11/09***
68	Submit project update report to DWR	4 days	Mon 8/17/09	Thu 8/20/09
69	Complete ADC Prop 50 testing	1 day	Mon 12/14/09	Mon 12/14/09
70	Write final report	30 days	Mon 12/14/09	Fri 1/22/10
71	Submit final report, billing, conclude project	2 days	Mon 1/25/10	Tue 1/26/10
72	Member/general workshop and publish results	2 days	Wed 1/27/10	Thu 1/28/10
73	Project Duration	743 days	Tue 4/3/07	Thu 2/4/10
74		1 day?	Tue 8/1/06	Tue 8/1/06

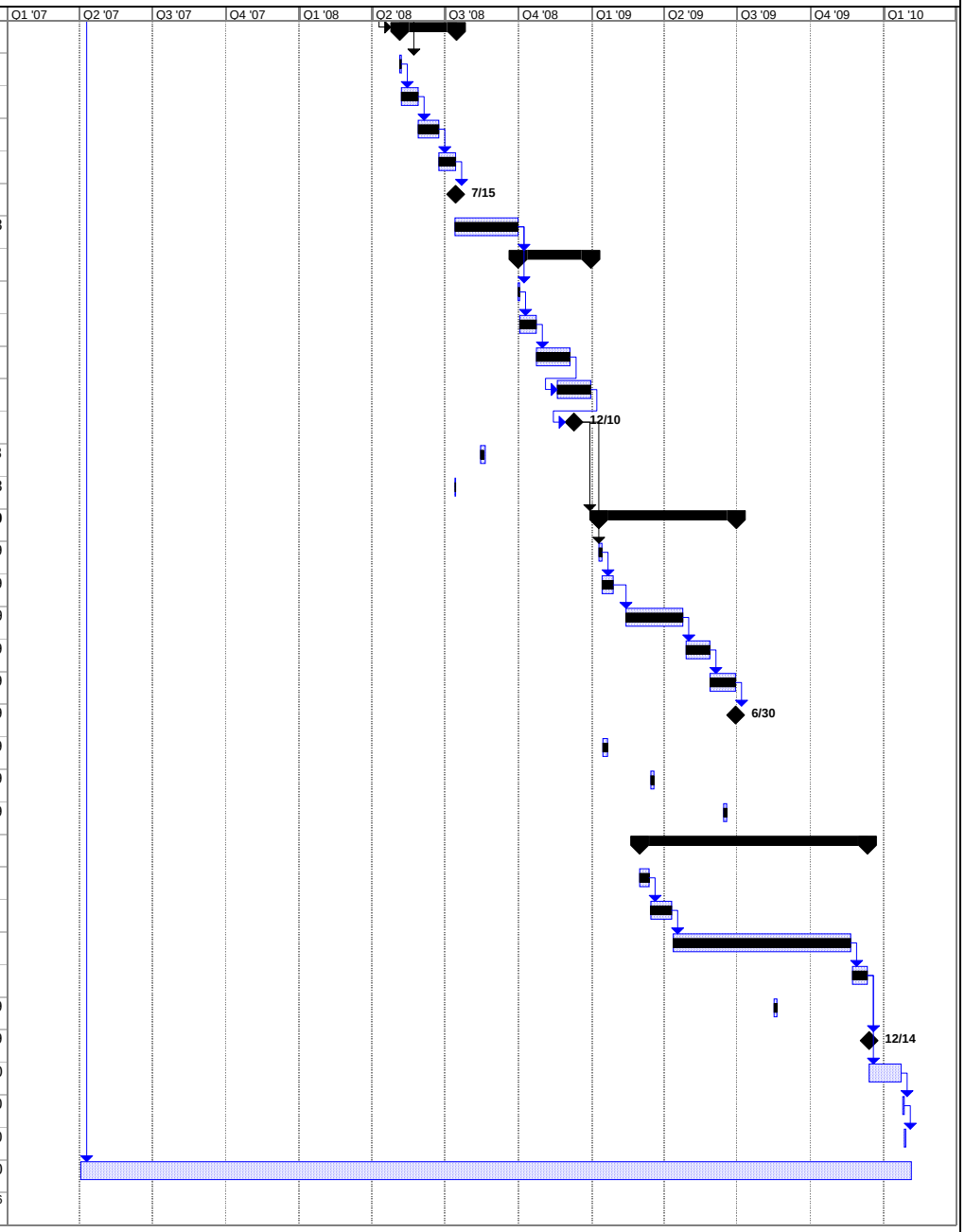

Project: ADC Prop 50 "As Tested" Proj
Date: Mon 2/7/11

Task		Summary		Rolled Up Progress		Project Summary	
Progress		Rolled Up Task		Split		Group By Summary	
Milestone		Rolled Up Milestone		External Tasks		Deadline	

Attachments

1. Water Quality, Flow and Pressure and Power Data
2. Amiad Test Data

Z-BOX DATA														
Date	Time	TMP (PDI)	Flow (gpm)	Temp (F)	Volume since last drain (gal)	Volume for this day (gal)	Yesterday's production (gal)	Filtrate Turbidity (NTU)	Raw Water Turbidity (NTU)	Filtrate SDI	Filtrate Fluor (PE)	Filtrate Fluor (Chloro A)	Raw Water Fluor (PE)	Raw Water Fluor (Chloro A)
1/16/2009	12:20	-3.7	140	60	5174	104032	186028	0.027	1.758	2.5	1.039	25.76	0.643	29.72
1/21/2008	11:03	-4.1	139	56	2560	91320	184017	0.027	1.554	2.7	0.789	13.34	0.465	29.58
1/22/2009	10:38	-4.3	140.5	55	6023	88406	184362	0.027	1.114	2.6	0.64	13.85	0.556	32.94
1/26/2008	14:32	-3.9	142	53	6159	9418	169003	0.028	2.01	2.1	0.763	16.83	0.595	28.7
1/27/2009	10:45	-4	142	52	6308	90858	161673	0.028	1.881	1.8	0.705	17.13	0.684	27.71
1/30/2009	11:37	-4	142	58	4211	97619	188527	0.029	1.989	2.1	0.822	12.07	0.517	31.79
2/2/2009	10:35	-4.1	142	58	5954	89790	187268	0.035	1.289	2.1	0.608	16.99	0.669	38.82
2/3/2009	11:40	-4.1	142	57	4033	97367	187905	0.035	1.041	2.2	1.258	21.19	0.738	38.56
2/4/2009	11:49	-4.3	141	57	690	98173	186927	0.034	1.032	2.4	0.59	13.57	0.579	27.58
2/5/2009	11:34	-4.5	140	52	601	95727	186832	0.036	1.797	2.3	0.616	20.06	0.679	55
2/6/2009	11:19	-5.1	142	54	6261	93631	185603	0.034	3.18	2.4	0.556	17.59	0.638	40.3
2/9/2009	13.03	-5.7	142	52	1022	108602	188658	0.029	2.217	2	0.69	17.03	0.659	31.21
2/10/2009	11.16	-5.9	141	53	4176	94598	188268	0.026	4.93	1.7	0.778	22.97	0.904	34.21
2/11/2009	11:18	-4	142	52	498	97635	158022	0.024	2.949	1.8	0.849	13.66	0.747	22.52
2/20/2009	11:13	-4.1	142	53	2816	93959	187575	0.03	5.005	2.2	0.784	9.451	0.681	28.81
2/23/2009	11:30	-4.2	142	54	259	95788	187634	0.032	2.841	2.8	0.552	8.579	0.419	21.88
2/24/2009	11:14	-4.2	142	54	738	93047	187684	0.029	3.142	2.6	0.43	7.117	0.429	18.51
2/25/2009	11:09	-4.3	141	54	2983	92956	186743	0.03	6.57	2.8	0.477	10.21	0.609	32.13
2/26/2009	11:58	-4.3	141	56	5753	99486	187235	0.031	3.664	2.6	0.302	6.816	0.496	15.96
2/27/2009	11:32	-4.3	141	54	4353	95950	186542	0.03	3.406	2.5	0.622	6.955	0.492	17.01
3/2/2009	11:58	-4.5	140	52	243	98920	187213	0.03	2.124	2.4	0.44	18.06	0.459	36.5
3/3/2009	10:55	-4.6	140	54	208	90274	186401	0.029	2.401	2.4	0.907	12.83	0.425	30.27
3/4/2009	11:41	-4.8	142	54	1145	96145	186030	0.03	3.244	2.7	0.865	10.43	0.461	39.53
3/5/2009	10:39	-5.1	141	53	2122	88451	186475	0.039	2.775	2.7	0.519	19.82	0.51	27.64
3/6/2009	12:28	-5.5	141	54	4389	102245	185922	0.038	3.497	2.7	0.916	8.575	0.51	22.91
3/9/2009	11:57	-6.6	136	53	5946	78512	182813	0.031	3.818	3.1	0.456	8.96	0.54	59.14
3/10/2009	13:19	-7.4	133	54	2831	96184	170161	0.032	3.402	3.3	0.664	10.63	0.543	45.07
3/11/2009	10.58	-8.1	130	52	2086	77346	176060	0.032	2.361	3.1	0.512	10.36	0.505	52.59
3/12/2009	11:40	-9.1	126	53	6553	80536	172451	0.031	2.562	3.6	0.377	11.91	0.462	58.05
3/16/2009	11:30	-7.8	141	55	5588	96884	191252	0.031	1.145	3.9	0.452	10.01	0.375	46.9
3/20/2009	11:07	-4.3	141	53	1425	92916	100184	0.031	2.783	3.4	0.437	14.97	0.471	51.92
3/23/2009	11:40	-4.9	142	52	5298	89501	188162	0.031	2.706	3.1	0.354	8.707	0.644	34.3
3/25/2009	10:55	-4.7	142.8	52	1964	83808	110921	0.031	1.703	2.6	0.54	18.03	0.641	36.18
3/26/2009	10:54	-4.8	142	54	6344	83943	188677	0.034	3.212	2.8	0.877	13.15	0.654	45.07
3/27/2009	10:59	-4.9	142	57	4498	84074	188987	0.031	1.445	2.6	0.873	11.9	0.441	72.05
3/31/2009	11:36	-5.8	139	55	4936	87268	171114	0.032	1.012	3.5	0.867	20.76	0.42	51.44
4/2/2009	11:05	-4.4	141.5	55	6270	84801	148948	0.031	1.064	2.8	0.782	9.589	0.497	66.13
4/3/2009	10:59	-4.3	141.5	54	9561	83138	187398	0.029	3.601	2.5	0.722	11.68	0.593	48.54
4/7/2009	10:50	-4.4	142	55	5993	83805	140313	0.03	1.785	2.2	0.564	12.46	0.514	44.74
4/8/2009	11:04	-4.4	141	54	3606	83820	188526	0.028	3.032	2.3	0.641	20.67	0.534	42.62
4/9/2009	11:30	-4.6	141	54	2785	87368	186592	0.03	2.236	2.1	0.825	21.77	0.498	28.01

Z-BOX DATA														
Date	Time	TMP (PDI)	Flow (gpm)	Temp (F)	Volume since last drain (gal)	Volume for this day (gal)	Yesterday's production (gal)	Filtrate Turbidity (NTU)	Raw Water Turbidity (NTU)	Filtrate SDI	Filtrate Fluor (PE)	Filtrate Fluor (Chloro A)	Raw Water Fluor (PE)	Raw Water Fluor (Chloro A)
4/10/2009	11:27	-4.7	141	54	4699	86798	186789	0.03	2.375	2.3	0.643	10.69	0.517	31.8
4/14/2009	11:54	-4.9	142	54	482	90711	147897	0.029	2.279	2.6	0.626	20.75	0.576	47.38
4/16/2009	11:11	-5.3	141	53	1052	84307	170110	0.027	2.138	2.4	0.613	12.39	0.488	30.6
4/17/2009	11:27	-5.5	141	52	5212	86538	186323	0.032	2.139	1.9	0.716	17.38	0.443	20.04
4/21/2009	10:10	-4.3	142	54	3996	83760	134755	0.029	2.664	2.3	0.648	13	0.733	61.59
4/22/2009	10:53	-4.4	142	54	6449	82837	194399	0.03	2.003	2.2	1.076	13.84	0.508	70.38
4/23/2009	11:30	-4.5	142	54	703	86913	187842	0.031	1.664	3	0.587	11.59	0.642	100.6
4/24/2009	10:12	-4.7	141	53	6631	77332	186727	0.031	1.776	3.7	0.791	24.54	0.435	137.4
4/29/2009	10:49	-6.4	139	54	6626	81002	168539	0.031	1.614	4.1	0.613	21.26	0.649	103.3
4/30/2009	11:49	-7.2	136	54	2622	83888	184074	0.029	1.749	4.3	0.578	32.91	0.518	55.6
5/1/2009	11:48	-4.5	141	54	5748	89837	148728	0.03	2.614	3.9	0.847	21	0.551	69.34
5/5/2009	10:46	-4.7	141	54	5885	83436	143649	0.03	2.368	3.3	0.642	25.23	0.663	34.59
5/6/2009	9:24	-4.8	141	52	3865	70270	188922	0.03	2.823	3.2	0.628	17.15	0.632	50.23
5/7/2009	11:05	-4.9	140	53	5508	83643	185813	0.03	3.956	2.6	0.572	19.5	0.662	33.77
5/8/2009	12:55	-4.3	126.6	57	4968	90689	176910	0.03	3.898	2.6	0.698	14.77	0.821	24.58
5/12/2009	10:55	-6.3	128	54	4455	76651	112903	0.03	1.891	4.2	0.559	12.12	0.526	186.5
5/13/2009	10:31	-8.7	100	57	6309	59137	157932	0.029	2.362	3.8	0.893	16.6	0.613	79.68
5/18/2009	11:37	-9.7	126	60	4942	81111	177635	0.034	1.216	2.7	0.531	11.31	0.453	210.3
5/20/2009	11:27	-5.9	132	56	2453	80406	99927	0.032	2.429	3.7	0.432	11.16	0.583	60.11
5/21/2009	11:32	-4.1	118	57	1257	73356	164239	0.032	2.306	2.3	0.707	12.55	0.608	31.22
5/22/2009	11:39	-4.9	142	55	505	88488	174267	0.032	2.223	2.2	0.62	12.47	0.573	47.66
5/25/2009	11:51	-4.6	131	57	5808	67372	152327	0.031	1.391	2.1	1.121	8.355	0.602	52.04
5/28/2009	10:38	-4.9	140	56	2953	78900	66274	0.032	1.757	2.1	1.127	13.32	0.649	96.05
5/29/2009	12:20	-3.8	110	56	4623	73305	165558	0.048	2.335	1.7	0.994	16.24	0.621	75.7
6/1/2009	11:39	-3.9	110	55	2255	69329	148129	0.045	2.111	1.7	0.642	20.09	0.653	40.35
6/2/2009	11:14	-4.1	110	55	2288	66865	147544	0.045	1.905	1.8	1.077	20.8	0.733	52.21
6/3/2009	11:13	-4.3	110	55	4792	66638	147880	0.046	2.151	2.2	0.898	13.82	0.627	55.71
6/4/2009	9:54	-4.5	109	58	4867	57808	147421	0.047	2.012	2.4	0.871	16.18	0.701	62.51
6/5/2009	10:16	-4.8	108	57	1082	59970	145745	0.034	2.237	2.5	0.847	15.96	0.756	64.4
6/8/2009	10:44	-6.3	104	60	5174	60912	142118	0.032	1.713	2.6	0.727	19.55	0.537	91.94
6/9/2009	11:12	-7	102	58	1697	62225	140278	0.032	3.155	2.5	0.833	20.48	0.721	101.5
6/10/2009	10:54	-7.1	95	58	5349	57294	133914	0.031	2.663	2.3	0.794	18.23	0.62	49.03
6/11/2009	10:16	-3.4	104	58	680	67656	113800	0.031	1.693	2.3	0.586	14.47	0.578	70.97
6/12/2009	11:16	-3.6	104	58	1547	63268	140391	0.041	2.244	2.1	1.081	18.21	0.586	53.82
6/15/2009	11:10	-3.8	104	59	4948	62846	139834	0.063	1.643	2.5	0.982	20.36	0.547	95.93
6/16/2009	15:25	-4.1	105.75	60	3176.5	91480	141056	0.047	2.153	3.2	0.356	4.912	0.552	104.4
6/17/2009	15:00	-4.6	104.8	62	3331	88422	141681	0.048	1.691	3.3	1.424	10.73	0.372	122.9
6/18/2009	11:10	-5.1	103	60	1751	64854	140684	0.048	1.272	3.4	0.317	8.19	0.596	99.2
6/22/2009	10:50	-9.2	92	58	5687	55272	128517	0.031	2.615	2.5	0.684	20.48	0.802	36.45
6/24/2009	10:45	-4.1	123	57	3229	69443	92243	0.034	2.083	3.2	0.782	11.87	0.642	59.75
6/25/2009	11:16	-4.5	122	58	3566	73046	161591	0.033	1.587	2.3	0.853	28.12	0.579	68.1

Z-BOX DATA														
Date	Time	TMP (PDI)	Flow (gpm)	Temp (F)	Volume since last drain (gal)	Volume for this day (gal)	Yesterday's production (gal)	Filtrate Turbidity (NTU)	Raw Water Turbidity (NTU)	Filtrate SDI	Filtrate Fluor (PE)	Filtrate Fluor (Chloro A)	Raw Water Fluor (PE)	Raw Water Fluor (Chloro A)
6/26/2009	15:56	-4.6	122	61	5368	104377	161864	0.037	3.023	2.2	0.582	13.52	0.64	85.18
6/29/2009	11:07	-5.9	118	58	5391	68594	157054	0.034	1.493	2.4	0.838	15.67	0.596	52.99
6/30/2009	11:01	-6.4	116	58	838	67834	155543	0.034	1.346	2.4	0.76	24.7	0.721	68.38
7/1/2009	8:41	-7	115	56	1240	52878	153858	0.034	2.003	2	0.642	14.94	0.741	60.61
7/3/2009	11:27	-2.8	50	58	2558	32022	100222	0.035	1.871	1.8	0.634	10.4	0.716	44.74
7/6/2009	9:45	-3	50	57	1611	26997	69395	0.032	1.577	1.9	0.723	12.38	0.848	46.2
7/7/2009	10:38	-2.9	50	59	1017	29399	69545	0.034	1.703	2.2	0.698	14.31	0.64	43.63
7/8/2009	9:51	-3	50	59	1862	27098	69087	0.035	1.983	2.6	0.488	5.553	0.633	71.14
7/9/2009	9:00	-3.1	50	58	2285	24492	68970	0.034	1.747	2.8	0.525	8.367	0.601	68.72
7/10/2009	10:18	-3.1	50	60	1882	28150	68473	0.035	2.339	2.6	0.559	7.519	0.595	103.9
7/13/2009	11:16	-3.3	50	61	4813	30825	67942	0.035	1.495	2.3	0.546	8.632	0.603	60.29
7/14/2009	9:34	-3.3	49	61	1611	25721	67838	0.035	1.227	2.3	0.561	7.835	0.626	47.13
7/15/2009	12:01	-3.6	49	60	3528	32548	67626	0.035	0.918	2.3	0.54	8.226	0.572	38.41
7/16/2009	10:37	-3.8	50	60	690	28275	67367	0.035	0.754	2.5	0.607	7.782	0.686	57.24
7/17/2009	10:18	-4.3	50	60	3092	28546	68108	0.035	0.822	2.2	0.562	12.17	0.598	44.85
7/20/2009	10:54	-2.1	52	60	1823	31416	72376	0.038	1.089	2.1	0.573	8.255	0.627	25.63
7/21/2009	9:51	-2.2	52	61	4973	28383	72144	0.035	1.189	2	0.566	7.601	0.759	37.42
7/22/2009	9:44	-2.1	52	61	3612	27664	71873	0.033	0.996	1.9	0.523	6.918	0.587	40.61
7/24/2009	10:15	-2.3	51	60	3182	23840	70803	0.034	1.008	2.2	0.578	8.728	0.58	43.77
7/27/2009	10:27	-2.7	55	62	1588	31383	61550	0.035	0.677	2.5	0.562	8.726	0.628	32.8
7/28/2009	9:51	-2.8	55	62	2522	29373	75498	0.034	0.828	2.4	0.616	11.43	0.707	45.4
7/29/2009	10:23	-3	55	61	451	31188	75245	0.034	0.954	2.2	0.539	9.37	0.572	42.87
7/30/2009	10:46	-3.2	55	61	4972	32601	75657	0.034	0.689	1.9	0.555	8.681	0.591	27.67
7/31/2009	10:57	-3.5	56	61	2885	33575	76091	0.035	0.566	1.7	0.623	10.86	0.821	36.04
8/3/2009	10:47	-4.2	55	60	1348	32778	76491	0.035	0.554	1.9	0.643	8.722	0.602	57.84
8/4/2009	8:43	-4.5	55	60	5225	26178	76425	0.034	0.579	1.8	0.607	9.711	0.622	44.77
8/5/2009	10:42	-4.7	55	60	1662	32386	75953	0.035	0.499	1.9	0.608	7.073	0.623	21.12
8/6/2009	11:06	-4.9	55	60	6491	33644	76106	0.037	0.545	1.6	0.545	7.81	0.583	21.03
8/7/2009	15:36	-4.7	55	61	4503	48124	75852	0.037	0.847	1.4	0.633	9.094	0.767	19.8
8/10/2009	11:09	-5.1	55	60	392	33422	76022	0.038	0.547	1.7	0.628	7.707	0.629	43.41
8/13/2009	10:34	-1.8	51	59	1031	29356	35386	0.036	0.504	1.9	0.728	10.88	0.747	41.59
8/14/2009	10:10	-1.9	50	59	3846	28201	69887	0.036	0.498	2	0.665	11.92	0.745	34.76
8/18/2009	10:11	-2.1	50	57	3812	28001	49351	0.035	0.465	1.6	0.67	11.77	0.747	33.22
8/19/2009	10:21	-2.1	50	57	903	28176	69417	0.034	0.347	1.6	0.832	15.54	0.83	37.41
8/20/2009	10:38	-2.1	50	59	4817	29081	68920	0.035	0.454	1.6	0.735	12.18	0.791	25.51
8/21/2009	10:59	-2.1	50	61	1744	29841	68667	0.044	0.422	1.4	0.545	7.897	0.69	26.75
8/24/2009	11:25	-2.2	49.1	61	4702	32103	67919	0.04	0.359	1.6	0.817	13.52	0.938	21.31
9/1/2009	9:25	-2.9	48.1	62	3637	25821	65898	0.037	0.273	1.8	0.656	8.173	0.696	16.17
9/2/2009	11:30	-3	48	64	2766	31478	65931	0.036	0.229	1.8	0.552	6.581	0.651	10.49
10/13/2009	11:54	-1.2	45	60	3350	29716	34551	0.041	0.829	1.7	0.642	13.29	0.66	78
10/14/2009	11:58	-1.2	45	60	492	29844	62891	0.037	1.508	1.4	0.685	12.73	0.811	63.21

Z-BOX DATA														
Date	Time	TMP (PDI)	Flow (gpm)	Temp (F)	Volume since last drain (gal)	Volume for this day (gal)	Yesterday's production (gal)	Filtrate Turbidity (NTU)	Raw Water Turbidity (NTU)	Filtrate SDI	Filtrate Fluor (PE)	Filtrate Fluor (Chloro A)	Raw Water Fluor (PE)	Raw Water Fluor (Chloro A)
10/15/2009	10:45	-1.2	45	62	2749	28750	62661	0.041	1.352	1.3	0.654	13.85	0.733	101.1
10/16/2009	12:48	-1.2	45	63	2133	31623	62366	0.04	1.057	1.2	0.758	13.77	0.766	53.78
10/21/2009	9:07	-1.3	44	58	2056	21744	34526	0.038	1.83	1	0.792	15.68	0.9	80.61
10/22/2009	11:38	-1.3	45	62	2567	13696	61252	0.039	0.826	1.1	0.716	10.5	0.75	36.82
10/27/2009	11:20	-2.2	60	62	5761	28887	61116	0.054	1.56	1.7	0.68	10.63	0.778	204.4
10/29/2009	12:27	-1.8	42	59	2506	39888	82969	0.049	0.589	1.2	0.73	12.31	0.758	35.4
10/30/2009	11:25	-1.8	42	60	4833	25753	69139	0.058	0.393	1.2	0.758	13.46	0.708	41.08
11/2/2009	10:24	-1.9	41	61	4373	25378	57160	0.058	0.492	1.2	0.717	11.22	0.761	41.58
11/4/2009	11:57	-1.9	41	60	2597	28946	56615	0.058	0.623	1.4	0.804	14.43	0.902	64.62
11/6/2009	1:12	-3	59	60	5302	35578	58115	0.052	0.457	1.8	0.73	12.03	0.733	36.9
11/9/2009	11:42	-3.7	60	60	2696	42117	82853	0.051	0.754	1.7	0.743	11.71	0.792	53.49
11/12/2009	12:36	-2.9	45	60	6232	44679	45261	0.052	0.548	1.3	0.753	12.58	0.766	54.8
11/13/2009	11:01	-4.3	61	60	4029	36106	78927	0.04	1.028	1.7	0.723	13.35	0.795	49.69
11/16/2009	11:36	-5.2	59	60	4215	41908	84031	0.037	0.567	1.1	0.723	11.28	0.784	45
11/18/2009	11:45	-5.5	57	59	3836	39669	78765	0.037	0.598	1.3	0.729	12.06	0.714	51.92
11/20/2009	12:00	-3.7	60	59	4408	42290	81222	0.047	1.006	1.7	0.666	10.76	0.726	46.12
11/23/2009	11:55	-4.4	59	60	4184	41620	81333	0.048	0.933	1.5	0.736	12.12	0.748	54.77
11/25/2009	11:42	-4.7	58	64	6212	40371	80501	0.048	0.689	1.3	0.605	10.39	0.671	42.68

Amiad AMF skid																																			
Date	Time	Hour Meter P1 (hrs)	KW	Temp (F)	Inlet Flow Time for 20 cu.ft (sec)	Inlet Flow Calc'd Flow Rate (gpm)	Inlet Totalizer (cu.ft.)	Intake Flow Magmeter FS-17 (gpm	Flow Meter-SAF Inlet (gpm)	Flow Meter-SAF Inlet Total (gal)	Flow Meter-SAF Outlet (gpm)	Flow Meter-SAF Outlet Total (gal)	Flow Meter-AMF Outlet (gpm)	Flow Meter-AMF Outlet Total (gal)	Outlet Flow Time for 200 gal (sec)	Outlet Flow Calc'd Flow Rate (gpm)	Outlet Totalizer (gal)	Raw Inlet Press (PSI)	AMF Inlet Press (PSI)	AMF Outlet Press (PSI)	Raw Water Turbidity (NTU)	Raw Water pH	Raw Water Cond (mS/cm)	Raw Water Dissolved Oxygen (ppm)	Raw Water Particle Count	Post Strainer Turbidity (NTU)	Post Strainer Particle Count	Filtrate Turbidity (NTU)	Filtrate SDI (15)	Filtrate Particle Count	Raw Water Fluor Chlorophyll A	Filtrate Fluor Chlorophyll A	SAF Flush Counter	AMF Flush Counter	Comments
cartridges																																			
4/2/2009	15:56	3232.80	4.20	nd	52.9	169.7	240370	155	168	30267	161	30093	158	30615	76.4	157.1	21183500	38.1	33.5	30.5	5.09	8.06	53.1	7.5	nd	4.325	nd	0.116	5.22	109509	nd	nd	2	1	
4/3/2009	11:06	3251.90	4.20	nd	54.3	165.3	262050	159	155	182448	151	180204	155	186837	76	157.9	21339700	38.1	34	27	4.86	8.05	54.6	7.8	nd	4.768	nd	0.145	5.36	191951	nd	nd	23	15	
4/6/2009	10:21	3253.50	4.20	nd	57.1	157.2	264010	151	157	197135	152	194080	161	201531	77	155.8	21353700	38	33	28	1.63	7.98	51.2	7.3	nd	1.589	nd	0.079	4.45	121768	34.94	20.62	24	15	
4/8/2009	11:32	3302.50	4.20	nd	54.4	165.0	322950	161	154	610014	149	598702	171	634984	72.2	166.2	21785200	38	35	32.5	3.704	7.97	52.8	6.98	nd	3.354	nd	0.118	4.83	106062	53.73	25.84	46	43	
4/10/2009	11:45	3350.50	4.20	nd	54.1	165.9	381130	154	162	1020482	148	993942	165	1070246	73.5	163.3	22214300	38.2	35	31	3.748	7.89	53.1	6.01	nd	2.985	nd	0.126	5.67	73707	34.02	17.17	60	66	
4/13/2009	9:28	3353.40	4.20	nd	53.6	167.5	384660	157	165	1045727	161	1017551	169	1096315	71.8	167.1	22240000	38	33.5	32.5	2.246	7.87	51.2	6.25	nd	2.189	nd	0.116	4.76	67180	32.66	17.22	61	67	
4/15/2009	9:30	3401.10	4.20	nd	52.9	169.7	441400	158	156	1435672	155	1402376	168	1521343	70.8	169.5	22656000	38	34.5	33.5	4.486	7.9	54.6	6.63	nd	4.329	nd	0.178	5.91	94418	53.11	17.17	120	95	
4/17/2009	11:25	3450.70	3.60	nd	73.5	122.1	487650	116	120	1765857	117	1717281	121	1864456	99.3	120.8	22999700	38	37.5	34	2.893	7.74	52.4	5.7	nd	2.642	nd	0.105	4.02	55774	26.59	8.558	138	111	
4/20/2009	9:41	3511.90	3.40	58	72.4	124.0	545020	116	118	2165697	111	2106253	120	2286328	97	123.7	23426500	38	37	35.5	1.312	7.75	49.7	6.25	nd	1.185	nd	0.061	4.09	70151	38.66	16.18	147	124	
4/22/2009	10:58	3561.00	3.40	56	76.9	116.7	589330	105	111	2485647	106	2410305	118	2616949	103.6	115.8	23758300	38	37.5	33.5	2.241	7.84	52.6	5.91	nd	2.254	nd	0.086	4.2	74299	67.9	18.61	164	141	
4/24/2009	10:10	3608.00	3.30	54	76.8	116.9	632220	103	112	2784835	108	2704750	119	2934775	103.1	116.4	24077500	38	38	34	1.848	7.93	53.1	7.14	nd	1.866	nd	0.104	4.79	109912	163.1	27.36	179	154	
4/27/2009	9:23	3628.20	3.40	54	77.2	116.3	650600	100	113.5	2915007	107	2830853	122	3070500	103.8	115.6	24214700	38	38	37	1.747	7.91	52.9	6.82	nd	1.593	nd	0.097	5.03	72892	162.5	26.47	196	164	
4/29/2009	10:40	3677.20	3.52	54	75.5	118.9	695620	91.7	101.8	3228312	107.2	3137298	123.2	3403577	103	116.5	24551200	38.1	38	30	3.347	7.99	54	8.15	nd	3.128	nd	0.156	5.21	80365	165.8	22.11	226	175	
2 micron cartridges																																			
5/1/2009	10:30	3724.30	2.98	57	113.47	79.1	724365	40.4	73.8	3431689	69.3	3329069	67.8	3612541	150.65	79.7	24767950	38	39	37	2.751	7.98	52.6	7.42	nd	2.747	nd	0.0761	4.7	40050	94.35	16.1	240	182	
5/4/2009	9:49	3795.30	2.87	54	111.8	80.3	767010	39	80.6	3732823	71	3611887	84	3923443	144.2	83.2	25093200	38	39.5	37.5	2.817	7.91	52.1	6.51	nd	2.616	nd	0.089	4.64	45663	39.05	13.4	259	198	
5/6/2009	9:28	3842.60	2.75	56	109.9	81.7	795160	37	76.7	3934231	73	3799453	76.3	4125623	143.3	83.7	25310200	38	39	38.5	4.046	7.65	51.1	4.78	nd	3.908	nd	0.079	4.42	47347	48.19	11.87	273	212	
5/8/2009	11:05	3873.90	3.35	57	75.31	119.2	814700	62.9	119.3	4073051	107.3	3929914	117.3	4265009	100.31	119.6	25469970	38	37.5	37	4.519	7.59	49.3	4.75	nd	4.766	nd	0.106	3.72	79808	27.09	7.52	282	221	
5/15/2009	11:22	3938.90	3.25	56	82.2	109.2	867880	92.6	104	4449047	102	4291064	104	4673250	110.6	108.5	25859400	38	38	36.5	3.138	8.09	52.5	9.58	nd	3.008	nd	0.198	7.82(10)	188148	284.7	44	314	254	
5/19/2009	10:52	3991.50	4.45	59	99.9	89.9	908040	nd	92	4727870	79	4561222	93	4972997	133.1	90.2	26156500	38	39	34.5	3.984	8.05	53.1	8.22	nd	3.827	nd	0.198	7.94(10)	145135	160.2	37.65	462	291	
5/20/2009	11:40	4017.20	5.15	57	65.8	136.4	932910	nd	132	4904777	124	4730479	148	5164417	87.8	136.7	26341800	38	38	29.5	3.609	7.87	51.5	6.64	nd	3.482	nd	0.191	5.84	119907	73.69	29.13	477	311	
5/22/2009	9:10	4059.80	4.95	56	70.2	127.9	965450	nd	126	4947559	116	4947619	130	5409299	91.8	130.7	26586500	38	38.5	35.5	2.815	7.83	52	5.79	nd	2.989	nd	0.192	5.21	92111	47.17	25.03	607	327	
5/25/2009	12:08	4133.90	4.65	58	74.8	120.0	1035140	nd	119	5632198	111	5421867	129	5954677	95.3	125.9	27117100	38	38.5	37.5	1.029	7.81	50.8	6.05	nd	1.027	nd	0.109	4.67	109435	40.77	21.54	690	353	
5/27/2009	9:40	4179.20	4.82	56	73.1	122.8	1077550	nd	112	5931291	108	5708012	127	6285804	95.9	125.1	27440700	38	39	38	2.422	7.79	51.1	5.65	nd	2.122	nd	0.096	4.42	82007	45.55	23.36	743	370	
5/29/2009	12:20	4225.90	4.95	57	73.7	121.8	1120860	nd	120	6237992	112	5998854	140	6624154	94.9	126.4	27771400	38	38.5	37.5	3.163	7.82	51.5	6.2	nd	3.078	nd	0.102	4.58	99205	59.38	29.06	871	392	
6/2/2009	11:38	4255.50	5.10	58	68.4	131.2	1148370	nd	124	6433185	120	6183999	136	6836183	90.2	133.0	27976800	38	38.5	38	2.918	7.8	50.7	5.9	nd	2.686	nd	0.089	4.15	76347	52.95	23.26	987	411	
6/3/2009	11:53	4279.70	4.97	57	68.8	130.5	1172770	nd	126	6605256	122	6349032	134	7025195	91.4	131.3	28160800	38	38.5	36	3.191	7.82	52.3	6.13	nd	3.101	nd	0.106	4.1	70656	63.73	23.55	1011	424	
6/5/2009	10:25	4326.00	4.60	58	70.2	127.9	1219000	nd	124	6931949	119	6659167	135	7389010	90	133.3	28509100	38	38.5	37	2.624	7.83	51.1	6.33	nd	2.564	nd	0.129	4.53	78971	70.63	28.34	1063	448	
6/8/2009	10:45	4398.00	2.40	60	71.2	126.1	1270610	nd	122	7303058	115	7002488	132	7793694	93.5	128.3	28900300	38	38	35.5	2.871	7.92	50.3	7	nd	2.566	nd	0.122	4.98	97030	55.39	24.58	1133	474	
10 micron cartridge																																			
6/12/2009	11:30	4490.60	5.95	58	63.5	141.4	1329410	nd	135	7721296	128	7395767	135	8237076	84	142.9	29341600	38	37.5	35.5	3.734	7.88	50.9	6.35	nd	3.511	nd	0.138	4.86	90865	61.65	24.93	1205	507	
6/15/2009	10:58	4561.80	6.10	59	66.1	135.8	1405700	nd	128	8280055	121	7908912	132	8822125	87.4	137.3	29924400	tc	36.5	34	2.231	7.92	50.7	7.65	nd	2.211	nd	0.105	4.68	77861	79.91	18.57	1241	534	
6/17/2009	15:15	4610.20	5.75	63	67.38	133.2	1455336	128.2	138.5	8645985	117.8	8237792	131	9201269	87.84	136.6	30300000	38	36	34	2.147	8.09	50	9.46	nd	2.287	nd	0.207	5.7	183416	243.7	49.47	1273	563	
6/18/2009	11:15	4630.10	6.00	63	65.1	137.9	1475577	124.7	132.9	8795192	125.1	8371853	133.9	9355200	86.82	138.2	30452940	35.5	32	38	1.826	8.05	50.9	9.17	nd	1.669	nd	0.172	5.51	281637	118.4	41.52	1284	576	
6/22/2009	11:00	4725.40	6.23	61	70.6	127.1	1572530	nd	128	9502055	122	9004021	132	10099054	88.8	135.1	31192100	38	34	33	4.032	7.81	49.9	6.15	nd	3.765	nd	0.092	5.29	79952	35.46	15.29	1340	629	
6/24/2009	11:01	4759.80	5.60	59	66.1	135.8	1608480	nd	132	9764834	116	9236528	132	10375466	84.6	141.8	31470500	38	37.5	34.7	2.123	7.87	50.5	6.7	nd	2.075	nd	0.103	4.73	155009	71.49	34.36	1363	643	
6/30/2009	10:35	4846.90	5.60	59	71.1	126.3	1694700	nd	128	10410598	116	9811974	128	11032110	89.4	134.2	32133700	38	35	30	1.819	7.95	51.9	6.99	nd	1.811	nd	0.108	4.86	175366	71.51	43.05	1543	682	
7/3/2009	10:15	4892.00	5.40	59	69.1	129.9	1726000	nd	132	10654380	119	10025533	133	11271899	88.4	135.7	32374600	38	37	35.5	2.919	7.85	50.9	6.05	nd	2.399	nd	0.129	4.72	91692	40.55	24.21	1581	698	
7/7/2009	10:10	4943.00	5.30	59	67.8	132.4	1775950	nd	138	11042147	124	10365179	135	11653292	88.1	136.2	32759100	38	38	36	2.316	7.83	49.5	6.64	nd	2.262	nd	0.099	4.64	92002	65.78	21.19	1629	726	
7/8/2009	11:30	4964.70	5.35	59	71.4	125.7	1797060	nd	128	11200214	115	10507940	131	11811553	92.5	129.7	32919700	38	38	33.5	2.941	7.94	50.4	7.42	nd	2.826	nd	0.1	4.82	93537	103.8	23.46	1646	739	
7/10/2009	10:45	5001.20	5.40	60	67.1	133.8	1832170	nd	133	11462071	117	10743729	134	12073286	88.1	136.2	33185100	38	38	36.5	3.878	7.99	51.5	8.02	nd	3.741	nd	0.132	5.01	283169	176.3	48.43	1674	765	
7/13/2009	10:50	5009.30	5.75	61	71.9	124.8	1839360	nd	137	11514522	125	10792074	127	12126762	95.4	125.8	33239700	38.1	38.4	31.5	2.319	8.01	50.6	8.17	nd	2.265	nd	0.121	5.04	156060	79.01	20.93	1710	774	
7/15/2009	10:32	5052.90	5.65	60	67.3	133.4	1882310	nd	133	11827322	122	11081243	135	12449461	87.7	136.8	33566800	38.2	38.5	37	1.235	8.03	51.8	7.5	nd	1.175	nd	0.131	5.61	102418	62.04	25.42	1735	796	
7/17/2009	10:29	5086.60	5.60	60	68.3	131.4	1916190	nd	132	12074498	120	11308560	134	12705627	88.6	135.4	33826300	38	38	36	1.244	8.02	51.9	7.1	nd	1.206	nd	0.116	5.64	106710	54.57	26.77	1758	809	
7/20/2009	11:15	5143.70	5.60	60	68.9	130.3	1973770	nd	131	12497524	117	11693451	129	13140449	90.1	133.2	34270200	38	37.5	36	1.772	7.92	51.2	6.37	nd	1.617	nd	0.101	5.21	83784	31.36	21.02	1794	828	
7/22/2009	10:42	5186.20	6.05	61	70.7	127.0	2014990	nd	122	12793306	119	11975592	125	13455620	91.4	131.3	34590400	38	38.5	34	1.282	7.96	51.2	7.09	nd	1.256	nd	0.103	5.25	154292	51.16	31.64	1823	841	
7/24/2009	11:00	5224.80	6.25	60	74.6	120.3	2052500	nd	115	13059159	112	12232384	118	13742790	95.2	126.1	34882300	38	38.5	30.5	1.458	8.08	51.7	7.75	nd	1.442	nd	0.149	5.78	132665	58.77	33.26	1866	854	
7/27/2009	10:55	5285.50	5.65	61	70.5	127.3	2112670	nd	122	13481361	116	12642587	126	14201257	91.8	130.7	35348300	38	38	33	1.126	8.15	52.8	7.93	nd	1.097	nd	0.133	5.56	106784	41.78	26.83	1917	879	
7/30/2009	10:02	5347.60	5.40	61	68.9	130.3	2174020	nd	119	13897858	113	13054774	128	14666770	90.6	132.5	35825800	38	38.5	36	1.156	8.01	51.1	6.96	nd	1.113	nd	0.161	5.89	93031	40.71	22.47	1951	899	
7/31/2009	9:55	5371.40	5.40	61	68.4	131.2	2198100	nd	126	14061263	118	13215295	133	14850060	90.8	132.2	36012700	38	38	35.5	1.093	8.02	50.9	7.08	nd	1.034	nd	0.151	5.61	96952	37.79	22.08	1963	911	
8/5/2009	9:47	5443.10	5.90	60	65.3	137.5	2271320	nd	136	14589560	129	13702459	139	15407925	85.7	140.0	36582700	40	39	37.5	0.907	7.95	50.4	6.13	nd	0.917	nd	0.096	4.77	102043	26.5	20.77	2030	943	
8/6/2009	10:20	5455.60	5.90	60	66.8	134.4	2284600	nd	133	14687780	122	13790607	134	15510034	88.6	135.4	36685700	40	39	35	0.853	7.91	50.7	5.72	nd	0.831	nd	0.085	4.48	89945	20.72	1612	2042	947	
8/7/2009	14:07	5483.30	5.55	61	73.7	121.8	2310990	nd	118	14887458	110	13966761	127	15709734	96.3	124.6	36891000	40	40	38	1.342	7.93	49.7	6.31	nd	1.276	nd	0.068	3.92	72915	19.55	14.84	2056	954	
8/20/2009	10:55	5512.40	4.70	59	82	109.5	2327390	nd	115	15064820	110	14148556	121	15911724	99.5	120.6	37096200	nd	40	32	1.077	8.06	52.4	7.37	nd	1.015	nd	0.136	4.74	93922	110.8	47.92	2211	971	
8/21/2009	9:32	5535.40	4.55	61	77.9	115.2	2346070	nd	124	15222824	109	14293288	119	16072030	100.5	119.4	37259600	nd	33	31.5	1.159	8.01	50.1	7.07	nd	1.045	nd	0.116	4.6	53381	25.16	17.6	2227	977	
8/24/2009	9:50	5607.30	4.05	64	68.34	131.4	2415887	nd	125.8	15740588	110.8	14760709	131.6	16605754	92.43	129.8	37798350	nd	39	35.5	1.076	8.11	51.9	7.44	nd	0.611	nd	0.138	5.53	51511	40.93	20.91	2262	nm	alarm flashing
9/21/2009	10:19	5935.00	5.40	61	90.6	99.1	2602230	nd	104	17103938	92	15936401	114	18012283	110.2	108.9	39220900	41.5	28	25	1.478	8.17	52.7	7.82	nd	1.418	nd	0.154	5.1	105813	93.73	32.93	2988	21	
9/22/2009	7:25	5956.40	5.10	58	78.4	114.5	2621900	nd	116	17260487	102	16068910	122	18161100	101	118.8	39372600	42	38	30.5	1.339	8.13	51.6	7.42	nd	1.222	nd	0.149	4.61	93289	71.41	33.5	3015	28	
9/25/2009	9:29	6029.70	4.65	60	78.8	113.9	2685490	nd	120	17769047	101	16490684	111	18629802	114.3	105.0	39851500	42	29	27	1.163	8.12	50.9	7.73	nd	1.127	nd	0.193	5.13	101983	68.16	25.59	3069	47	
10/2/2009	9:37	6107.20	4.75	61	75.5	118.9	2712990	nd	122	17981831	114	16671511	124	18833028	96.4	124.5	40058400	44	41	39	0.612	8.15	50.1	7.71	nd	0.578	nd	0.112	4.35	78747	30.48	25.48	3099	57	
10/6/2009	9:52	6202.80	4.70	61	65.3	137.5	2787400	nd	135	18554310	122	17139462	120	19368411	93	129.0	40607400	44	42	40	0.511	8.08	50.6	8.17	nd	0.477	nd	0.067	3.85	57926	30.92	25.26	3160	70	
10/7/2009	9:32	6226.50	4.70	60	63.5	141.4	2811710	nd	136	18736167	118	17292016	128	19541649	92.2	130.2	40783400	43.5	41	39	0.598	8.13	51.8	7.82	nd	0.591	nd	0.108	4	72478	38.74	23.58	3173	74	
10/9/2009	14:50	6279.50	4.65	59	70.6	127.1	2867990	nd	128	19154426	110	17636898	121	19930293	96	125.0	41178400	42.5	38.5	36	0.482	8.2	52.7	8.04	nd	0.487	nd	0.072	4.36	91840	29.65	22.85	3199	83	
10/13/2009	10:04	6342.10	4.60	60	75.5	118.9	2929800	nd	123	19620874	110	18014247	118	20356677	99.3	120.8	41615000	42	40	31	1.102	8.22	53.9	6.81	nd	0.981	nd	0.133	4.42	84327	90.9	28	3297	98	
10/14/2009	10:08	6349.40	4.60	60	76.3	117.6	2936320	nd	135	19673157	118	18058349	126	20403731	99	121.2	41664600	41.5	38.5	36.5	1.695	8.26	53	6.79	nd	1.672	nd	0.171	4.61	71860	44.84	26.57	3362	101	
10/16/2009	11:15	6374.30	4.55	62	69.7	128.8	2961610	nd	138	19866473	111	18221072	112	20572316	95	126.3	41842000	41.5	37.5	35.5	1.133	8.2	51.1	7.09	nd	1.115	nd	0.103	4.67	92864	32.19	19.86	3503	109	
10/28/2009	8:45	6449.60	4.70	60	67.8	132.4	2971510	nd	138	19947480	123	18286707	125	20631131	88.3	135.9	41904400	41	32	26	1.007	8.12	51.8	7.34	nd	0.953	nd	0.122	4.19	66431	46.71	25.96	3817	121	
10/29/2009	11:55	6471.60	4.85	59	63.1	142.3	2994110	nd	149	20128876	140	18441457	132	20780599	83.2	144.2	42075200	40	32.5	30	0.736	8.17	49.8	7.69	nd	0.711	nd	0.114	4.18	59777	25.3	19.47	3919	126	
10/30/2009	10:00	6493.60	4.50	60	78.1	114.9	3013990	nd	117	20293903	108	18581152	112	20915485	104	115.4	42232700	42.5	38.5	35.5	0.374	8.23	51.7	7.79	nd	0.368	nd	0.071	3.99	33061	24.04	18.79	3929	128	
11/2/2009	8:55	6565.20	4.55	61	77.8	115.4	3079080	nd	133	20831236	109	19027905	115	21352739	101.5	118.2	42743000	44	39	36	0.469	8.19	51.5	7.63	nd	0.447	nd	0.073	4.09	44620	26.12	20.58	3964	135	
11/4/2009	10:25	6597.10	4.50	60	76.4	117.5	3089200	nd	119	20917507	107	19096209	109	21420518	100.5	119.4	42822000	43.5	38	36	0.684	8.17	52.7	7.33	nd	0.643	nd	0.144	4.91	95952	44.96	25.95	3990	138	
11/6/2009	11:30	6646.00	4.50	60	76.1	118.0	3133160	nd	124	21292836	105	19390214	102	21719807	100.2	119.8	43171100	42.5	37	34.5	0.471	8.18	51.7	7.52	nd	0.464	nd	0.095	4.13	53574	35.13	23.31	4014	144	
11/12/2009	10:14	6767.40	4.50	59	78.6	114.2	3218570	nd	122	21986342	117	19986013	109	22292870	102	117.6	43838400	40	33	31	0.691	8.2	52.6	7.41	nd	0.688	nd	0.133	4.72	79983	37.32	25.85	4102	158	
11/13/2009	9:30	6790.60	4.50	59	78.8	113.9	3239300	nd	123	22150878	121	20152437	112	22433037	99.9	120.1	44000000	40.5	33	30	0.821	8.15	51.5	7.08	nd	0.772	nd	0.129	4.81	81925	35.28	22.84	4125	163	
11/16/2009	9:35	6862.20	4.65	60	75.6	118.7	3305080	nd	126	22684204	124	20681098	116	22890361	99.2	121.0	44519700	42	35	31	0.529	8.16	50.1	7.7	nd	0.507	nd	0.076	3.71	53745	27.76	23.52	4172	175	
11/18/2009	10:12	6910.50	4.60	60	73.5	122.1	3349380	nd	132	23045947	131	21029547	103	23196070	94	127.7	44868700	42	35	32	0.587	8.05	51.6	7.4	nd	0.573	nd	0.144	4.57	75355	34.27	26.22	4200	181	
11/20/2009	10:25	6920.50	4.65	59	73.4	122.3	3358440	nd	128	23119261	127	21099100	114	23256101	95.2	126.1	44938700	42	35	31.5	1.165	8.11	51.2	7.11	nd	1.035	nd	0.206	4.49	95795	41.2	28.76	4277	186	
11/23/2009	10:22	6957.80	4.70	60	75.9	118.3	3392060	nd	117	23385030	122	21362302	112	23483563	98.8	121.5	45198400	41	35	28	0.905	8.21	51.3	7.9	nd	0.839	nd	0.132	4.62	58103	50.21	20.53	4416	197	
11/25/2009	10:13	7005.50	4.45	60	77.4	116.0	3435530	nd	118	23732865	116	21705250	109	23777359	100.9	118.9	45539300	40	33.5	25.5	0.622	8.18	49.7	7.44	nd	0.609	nd	0.166	4.86	65699	33.89	22.05	4472	205	

Quarterly Technical Progress Report
Covering Period January 1, 2010 to March 31, 2010
Date of Report 2-8-11

Agreement Number:	4600007440
Subject:	Prop 50 II Desal 46-7440 P-04 ADC
DWR ID Number:	n/a Department of Water Resources Office of Water Use Efficiency 901 P Street, Third Floor Sacramento, CA 95814
Project Title:	Optimizing Seawater Reverse Osmosis for Affordable Desalination
Recipient Organization:	Affordable Desalination Collaboration 2419 E. Harbor Blvd, #173 Ventura, CA 93001
Partners:	See attached membership list.
Contact Person:	John MacHarg 2419 E. Harbor Blvd, #173 Ventura, CA 93001 Tel: 650-283-7976 Fax: 805-658-8060 e-mail: jmacharg@affordabledesal.com
Date Submitted:	2-8-11

_____
Signed, Reviewed by designated representative

1. **Project Objective:** The objectives of the Affordable Desalination Collaboration (ADC) are to demonstrate affordable, reliable and environmentally responsible reverse osmosis desalination technologies and to provide a platform by which cutting edge technologies can be tested and measured for their ability to reduce the overall cost of the seawater reverse osmosis (SWRO) treatment process.

2. **Project Description / Background:** A key challenge facing the seawater desalination industry today is to develop a new generation of reverse osmosis (RO) plants that deliver high-quality, fresh water at a reduced economic and environmental cost. The key to achieving these goals is to address the most

expensive and environmentally taxing component of operating a desalination system: energy.

The ADC was formed in 2004 to fund and execute the first part of a multiple phase Affordable Desalination Demonstration Project. The ADC members are a group of leading government agencies, municipalities, RO manufacturers, consultants and professionals partnering together to help reduce the costs associated with desalination.

The first phase of the project, ADC I, built and operated a demonstration plant at the United States Navy's Seawater Desalination Test Facility in Pt. Hueneme, California. The plant utilized a combination of proven technologies developed primarily in the U.S. and California to demonstrate that seawater desalination can be optimized to make it technically and economically viable. ADC I achieved remarkable results by desalinating seawater at energy levels between 6.0-6.9 kWh/kgal (1960-2250 kWh/acre-ft). On average, these numbers make the power for desalination comparable to the power required for the State Water and the Colorado River Aqueduct projects and they are approximately 35% lower than experts had been projecting for seawater desalination. For the approximate 100 mgd of proposed seawater desalination projects in Southern California alone, this 35% savings equates to approximately 140,000 Mega Watt hours in energy savings per year.

This second phase (ADC II) will pursue the following demonstration, and development programs.

a. Test and demonstrate additional manufacturers' membranes through a protocol similar to Phase I.
b. Test and demonstrate DOW FILMTEC's next generation "hybrid-membrane".
c. Develop and demonstrate new process designs that are possible as a result of the isobaric energy recovery technologies. We will use the ADC pilot system to test and demonstrate these new flow schemes in order to push the recoveries above 50%, while still maintaining good water quality and low energy performance.
d. Test and demonstrate ZENON ultra-filtration technology ahead of our ADC pilot system. This portion of the test should build on and compliment the other pre-filtration studies that are taking place in the region.
e. Test and demonstrate Ocean Pacific Technology's (OPT) Axial Piston Pressure Exchanger (AP^2X) pump technology.

Below are the additional test items related to our no-cost extension request dated 7-23-08

f. Re-run Toray test due to un-explained step change reduction in performance during first test.

g. Test and demonstrate additional set of DOW-FILMTEC - SW30XHR-400i high boron rejection membranes to demonstrate better water quality and higher Boron rejection than previously tested DOW membranes.
h. Test and demonstrate additional set of high rejection Koch membranes to demonstrate better water quality than previously tested Koch Membranes.
i. Test and demonstrate Amiad's Micro Fiber pre-filtration technology that promises to reduce the cost and foot print compared to current media filter and advanced filtration technologies.
j. Test and demonstrate new X-pump and energy recovery technology that promises significant energy reductions for medium sized SWRO systems and will be simpler to apply and operate compared to traditional pump and isobaric technologies.

Thus far we have completed the five sets of manufacturers' membrane testing that including the Toray TM800C membrane test and retest (Task 2 and 6), the Koch 2822HF-400 membrane test (Task 3) and the Hydranautics SWC5 membrane (Task 4), DOW-FIMTEC Hybrid (Task 5) and the DOW-FILMTEC - SW30XHR-400i high boron rejection membranes (Task 7). In addition, we have completed the Unbalanced High Recovery Testing (Task 9).

- Start Date of Contract: April 2, 2007
- End Date of Contract: June 30, 2010

3. Progress and Status:

In Q1-10 we finished all operational tasks and decommissioned all our systems including the Zenon 1000 and Amiad units.

4. Percent Complete of Total Project: ~100% with final report still to be completed

5. Deliverables:

Trade Show/Conference/Publication	Date(s)	Author(s)	Presenter	DWR Submittal
Optimizing Lower Energy Seawater Desalination, The Affordable Desalination Collaboration	Nov-2009	Stephen Dundorf, John MacHarg, Bradley Sessions, Thomas F. Seacord	Stephen Dundorf	Q3-09
Permeate Recovery Rate Optimization at the Alicante Spain SWRO Plant	Nov-2009	Richard Stover, Antonio Ordonez Fernandez, Joan Galtes	Richard Stover	Q3-09
ADC Presentation at CA-NV-AWWA Desal Workshop	June-2009	John MacHarg	John Macharg	Q2-09
ADC Presentation UCLA Work shop	Feb-2009	n/a	John MacHarg	Q1-09
Water Scarcity UNESCO UC Irvine	Dec-2008	John MacHarg	John MacHarg	Q4-08
ADC Base Lines SWRO System Performance, Water and Desalination Report	September 2008	John MacHarg, Tom Seacord, Bradley Sessions	n/a	Q3-08

Joint ADC-AMTA-SEDA workshop, Annual Conference, Naples, FL	July 2008	ADC-AMTA-SEDA	Various	Q3-08
ADC Completes Profile of SWRO Press Release	March 28, 2008	ADC	n/a	Q1-08
IDA World Conference, Gran Canaria, ADC II Update	October 21-26, 2007	Stephen Dundorf, Thomas F. Seacord, John MacHarg	Stephen Dundorf	Q3-07
Desalination and Water Reuse (DWR) Quarterly, Innovative Designs to be Tested in ADC II	Aug/Sept-07	John P. MacHarg	n/a	Q3-07
AMTA 2007 Annual Conference, Las Vegas, ADC I 10 mgd Application	July 23-27, 2007	Bradley Sessions, Tom Seacord, P.E.	Tom Seacord	Q2-07
AWWA Membrane Technology Conference, Tampa Florida, Collier County results	March 18-21, 2007	Brandon Yallaly, P.E., Tom Seacord, P.E., Steve Messner	Brandon Yallaly	Q2-07

6. **Expenditures:** See next page.

Affordable Desalination Collorboration
State of California Water Board Report
Quarter ending March 31, 2010

	Budgetary Category (I)	Balances December 31, 2009 Non State Share (II)	State Share (Grant) (III)	Total Project Costs (IV) = (II+III)	Q 1 Expenditures Non State Share (II)	State Share (Grant) (III)	Total Project Costs (IV) = (II+III)	Balances March 23, 2010 Non State Share (II)	State Share (Grant) (III)	Total Project Costs (IV) = (II+III)
(a)	Administration									
	Salaries, wages	$ -	$ 24,613	$ 24,613		$ 17,250	$ 17,250	$ -	$ 7,363	$ 7,363
	Fringe benefits	$ -	$ 8,564	$ 8,564		$ 4,901	$ 4,901	$ -	$ 3,663	$ 3,663
	Supplies	$ -	$ 496	$ 496			$ -	$ -	$ 496	$ 496
	Equipment	$ -	$ 1,000	$ 1,000			$ -	$ -	$ 1,000	$ 1,000
	Consulting services	$ (25,000)	$ 6,305	$ (18,695)			$ -	$ (25,000)	$ 6,305	$ (18,695)
	Travel	$ (3,027)	$ 1,178	$ (1,848)			$ -	$ (3,027)	$ 1,178	$ (1,848)
(b)	Planning/design/engineering	$ (10,500)	$ 1,909	$ (8,591)			$ -	$ (10,500)	$ 1,909	$ (8,591)
(c)	Equipment purchases/Rentals/Rebates/Vouchers	$ 4,250	$ 8,000	$ 12,250			$ -	$ 4,250	$ 8,000	$ 12,250
(d)	Materials/Installation/Implementation	$ 58,500	$ 0	$ 58,500	$ 10,500		$ 10,500	$ 48,000	$ 0	$ 48,000
(e)	Implementation verification	$ 7,500	$ 2,500	$ 10,000		$ -	$ -	$ 7,500	$ 2,500	$ 10,000
(f)	Project legal/License/Insurance fees	$ -	$ 2,500	$ 2,500			$ -	$ -	$ 2,500	$ 2,500
(g)	Structures	$ -	$ -	$ -			$ -	$ -	$ -	$ -
(h)	Land Purchase/Easement	$ -	$ -	$ -			$ -	$ -	$ -	$ -
(i)	Environmental Compliance/Mitigation/Enhancement	$ -	$ -	$ -			$ -	$ -	$ -	$ -
(j)	Construction	$ -	$ -	$ -			$ -	$ -	$ -	$ -
(k)	Other (Operating Cash)	$ -	$ -	$ -			$ -	$ -	$ -	$ -
(l)	Operation, monitoring and assessment	$ -	$ 7,812	$ 7,812		$ 7,812	$ 7,812	$ -	$ 0	$ 0
(m)	Report preparation	$ 2,000	$ 2,500	$ 4,500			$ -	$ 2,000	$ 2,500	$ 4,500
(n)	Outreach and information sharing	$ (18,483)	$ -	$ (18,483)	$ 11,248		$ 11,248	$ (29,731)	$ -	$ (29,731)
(o)	Subtotal	$ 15,240	$ 67,378	$ 82,618	$ 21,748	$ 29,963	$ 51,711	$ (6,508)	$ 37,415	$ 30,907
(p)	Overhead (8%)	$ -	$ 35,252	$ 35,252		$ 2,397			$ 32,855	$ 32,855
(q)	Contingency (10%)	$ -	$ 18,879	$ 18,879		$ -			$ 18,879	$ 18,879
(r)	Total (o+p+q)	$ 15,240	$ 121,509	$ 136,749	$ 21,748	$ 32,360	$ 51,711	$ (6,508)	$ 89,149	$ 82,641

7. **Schedule Status:** Project was completed slightly ahead of schedule.

8. **Plans for Next Quarter:** n/a

9. **Attachments:** n/a

All quarterly reports should be publicly disclosable and not contain confidential, proprietary or business sensitive information.

Task and % Complete Progress Table

Agreement Number	Starting Date:	Completion Date:	Quarter-Year	Report Number	PERCENT OF
4600007440	4.2.07	6.30.10	Q1-2010	12	
Grantee Agency Name: Affordable Desalination Collaboration		% Time Elapsed 95%	Total Grant Funds used $ 910,851	Grant funds this Qtr $ 32,360	
Name of Project: Optimizing Seawater Reverse Osmosis for Affordable Desalination					

TASKS	YEAR / MONTH	2008 Qtr 3	2008 Qtr 4	2009 Qtr 1	2009 Qtr 2	2009 Qtr 3	2009 Qtr 4	Project	Task Complete Last Report	Task Complete This Report	Project Complete
Task 1: Zenon 1000 pilot demonstration							Complete	12	70	30	12
Task 2: Toray low energy membrane demonstration		Complete						10	100	0	10
Task 3: Koch low energy membrane demonstration		Complete						10	100	0	10
Task 4: Hydranautics low energy membrane demonstration		Complete						10	100	0	10
Task 5: Dow-FILMTEC hybrid membrane demonstration		Complete						10	100	0	10
Task 6: TorayTM800C low energy membrane demonstration (re-test)		Complete						10	100	0	10
Task 7: DOW FILMTEC high Boron rejection memb. demonstration				Complete				10	100	0	10
Task 8: Koch high rejection memb. demonstration		Canceled						0	0	0	0
Task 9: Unbalanced PX high recovery testing							Complete	15	100	0	15
Task 10: Interstage-PX hybrid high recovery testing		Canceled						0	0	0	0
Task 11: Demonstrate OPT's APX pump and energy recovery system		Canceled						0	0	0	0
Task 12: Amiad Fiber Filter Test							Complete	8	90	10	8
Show Progress by Use of Bar Chart	**Scheduled =**							100			100
	Completed =										

Notes: 1. Since we have been operating significantly under budget, we have received approval to add tasks 6, 7, 8, 11 and 12 to the task list. These additional items will extend the project schedule from the current December 2008 end date through Feb- 2010. The additional tasks and subsequent extension to the schedule will not result in an increase to the State Share/grant ie. no cost extension.

Schedule

ADC Actual "As Tested" Project Schedule

ID	Task Name	Duration	Start	Finish
1	Agreement development	168 days	Tue 8/1/06	Thu 3/22/07
2	Final agreement signed	5 days	Fri 3/23/07	Thu 3/29/07
3	Project begins	1 day	Mon 4/2/07	Mon 4/2/07
4	**TorayTM800C low energy membrane demonstration**	**51 days**	**Mon 4/30/07**	**Mon 7/9/07**
5	Install Toray TM800C Membranes	2 days	Mon 4/30/07	Tue 5/1/07
6	TM800C Ripening period	15 days	Wed 5/2/07	Tue 5/22/07
7	TM800C 9 flux and recovery points	18 days	Wed 5/23/07	Fri 6/15/07
8	TM800C Most affordable point	15 days	Mon 6/18/07	Fri 7/6/07
9	Complete Toray TM800C testing	1 day	Mon 7/9/07	Mon 7/9/07
10	Submit project update report to DWR	5 days	Mon 7/9/07	Fri 7/13/07
11	**Koch low energy membrane demonstration**	**88 days**	**Tue 7/10/07**	**Thu 11/8/07**
12	Install membranes	2 days	Tue 7/10/07	Wed 7/11/07
13	Ripening period	20 days	Thu 7/12/07	Wed 8/8/07
14	9 flux and recovery points	30 days	Thu 8/9/07	Wed 9/19/07
15	Most affordable point	35 days	Thu 9/20/07	Wed 11/7/07
16	Complete Koch testing	1 day	Thu 11/8/07	Thu 11/8/07
17	Submit project update report to DWR	5 days	Mon 9/17/07	Fri 9/21/07
18	Innovative PX flow schemes work shop	2 days	Thu 11/8/07	Fri 11/9/07
19	**Hydranautics low energy membrane demonstration**	**78 days**	**Fri 11/9/07**	**Tue 2/26/08**
20	Install membranes	2 days	Fri 11/9/07	Mon 11/12/07
21	Ripening period	20 days	Tue 11/13/07	Mon 12/10/07
22	9 flux and recovery points	25 days	Tue 12/11/07	Mon 1/14/08
23	Most affordable point	30 days	Tue 1/15/08	Mon 2/25/08
24	Complete Hydranautics testing	1 day	Tue 2/26/08	Tue 2/26/08
25	Submit project update report to DWR	4 days	Mon 1/21/08	Thu 1/24/08
26	**Zenon 1000 Pilot Demonstration**	**473 days**	**Mon 3/3/08**	**Wed 12/23/09**
27	Install and test Zenon System	18 days	Mon 3/3/08	Wed 3/26/08
28	Operate and monitor Zenon 1000 membrane pilot system	454 days	Thu 3/27/08	Tue 12/22/09
29	Complete Zenon testing	1 day	Wed 12/23/09	Wed 12/23/09
30	Submit project update report to DWR	4 days	Mon 3/17/08	Thu 3/20/08
31	**DOW Hybrid Membrane Demonstration**	**49 days**	**Wed 2/27/08**	**Mon 5/5/08**
32	Install DOW hybrid membranes	2 days	Wed 2/27/08	Thu 2/28/08
33	DOW Hybrid Ripening period	15 days	Wed 2/27/08	Tue 3/18/08
34	DOW Hybrid 9 flux and recovery points	18 days	Wed 3/19/08	Fri 4/11/08
35	DOW Hybrid Most affordable point	15 days	Mon 4/14/08	Fri 5/2/08
36	Complete DOW testing	1 day	Mon 5/5/08	Mon 5/5/08
37	Submit project update report to DWR	4 days	Mon 6/16/08	Thu 6/19/08

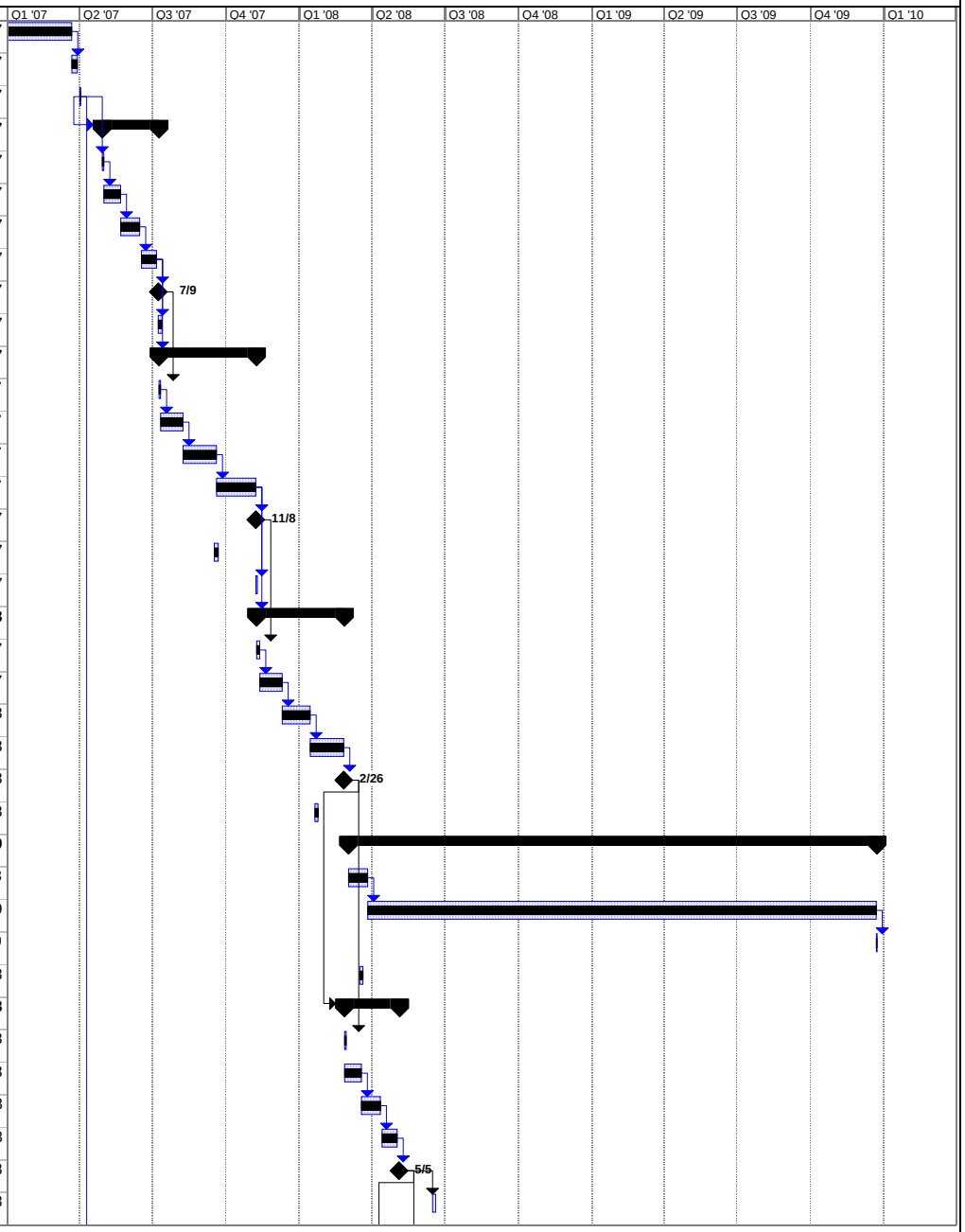

Project: ADC Prop 50 "As Tested" Proj
Date: Wed 2/9/11

Task		Summary		Rolled Up Progress		Project Summary	
Progress		Rolled Up Task		Split		Group By Summary	
Milestone		Rolled Up Milestone		External Tasks		Deadline	

ADC Actual "As Tested" Project Schedule

ID	Task Name	Duration	Start	Finish
38	***TorayTM800C low energy membrane demonstration (re-test)***	***51 days***	***Tue 5/6/08***	***Tue 7/15/08***
39	***Install Toray TM800C Membranes***	***2 days***	***Tue 5/6/08***	***Wed 5/7/08***
40	***TM800C Ripening period***	***15 days***	***Thu 5/8/08***	***Wed 5/28/08***
41	***TM800C 12 flux and recovery points***	***18 days***	***Thu 5/29/08***	***Mon 6/23/08***
42	***TM800C Most affordable point***	***15 days***	***Tue 6/24/08***	***Mon 7/14/08***
43	***Complete Toray TM800C testing***	***1 day***	***Tue 7/15/08***	***Tue 7/15/08***
44	NFESC shutdown due to intake capacity issues	57 days?	Mon 7/14/08	Tue 9/30/08
45	***DOW FILMTEC high Boron rejection memb. demonstration***	***65 days***	***Wed 10/1/08***	***Tue 12/30/08***
46	***Install DOW FILMTEC SW30XHR-400i Membranes***	***2 days***	***Wed 10/1/08***	***Thu 10/2/08***
47	***DOW FILMTEC SW30XHR-400 Ripening period***	***15 days***	***Fri 10/3/08***	***Thu 10/23/08***
48	***DOW FILMTEC SW30XHR-400 12 flux and recovery points***	***30 days***	***Fri 10/24/08***	***Thu 12/4/08***
49	***DOW FILMTEC SW30XHR-400 Most affordable point***	***30 days***	***Wed 11/19/08***	***Tue 12/30/08***
50	***Complete FILMTEC SW30XHR-400 testing***	***1 day***	***Wed 12/10/08***	***Wed 12/10/08***
51	Submit project update report to DWR	4 days	Fri 8/15/08	Wed 8/20/08
52	ADC-AMTA Member workshop and progress report	1 day	Mon 7/14/08	Mon 7/14/08
53	**Unbalanced PX high recovery testing**	**122 days**	**Sat 1/10/09**	**Tue 6/30/09**
54	Install PX flow scheme membrane set	2 days	Sat 1/10/09	Tue 1/13/09
55	Flush and base line membranes	10 days	Wed 1/14/09	Tue 1/27/09
56	Execute unbalance test protocol @ 18 points (mixing issues)	51 days	Fri 2/13/09	Fri 4/24/09
57	Execute unbalance test protocol @ 11 points (second set)	22 days	Wed 4/29/09	Thu 5/28/09
58	PX unbalanced most affordable point (24/7 for 1 months)	22 days	Fri 5/29/09	Mon 6/29/09
59	Complete Unbalanced PX testing	1 day	Tue 6/30/09	Tue 6/30/09
60	Submit project update report to DWR	4 days	Thu 1/15/09	Tue 1/20/09
61	Submit project update report to DWR	4 days	Mon 3/16/09	Thu 3/19/09
62	Submit project update report to DWR	4 days	Mon 6/15/09	Thu 6/18/09
63	***Demonstrate Amiad Fiber Filter Test***	***205 days***	***Mon 3/2/09***	***Fri 12/11/09***
64	***Install fiber filter unit***	***10 days***	***Mon 3/2/09***	***Fri 3/13/09***
65	***Operate system through "break-in and shakedown" period***	***20 days***	***Mon 3/16/09***	***Fri 4/10/09***
66	***Demonstrate Amiad technology 24/5***	***160 days***	***Mon 4/13/09***	***Fri 11/20/09***
67	***Complete Fiber Filter demonstration***	***15 days***	***Mon 11/23/09***	***Fri 12/11/09***
68	Submit project update report to DWR	4 days	Mon 8/17/09	Thu 8/20/09
69	Complete ADC Prop 50 testing	1 day	Mon 12/14/09	Mon 12/14/09
70	Write final report	30 days	Mon 12/14/09	Fri 1/22/10
71	Submit final report, billing, conclude project	2 days	Mon 1/25/10	Tue 1/26/10
72	Member/general workshop and publish results	2 days	Wed 1/27/10	Thu 1/28/10
73	Project Duration	743 days	Tue 4/3/07	Thu 2/4/10
74		1 day?	Tue 8/1/06	Tue 8/1/06

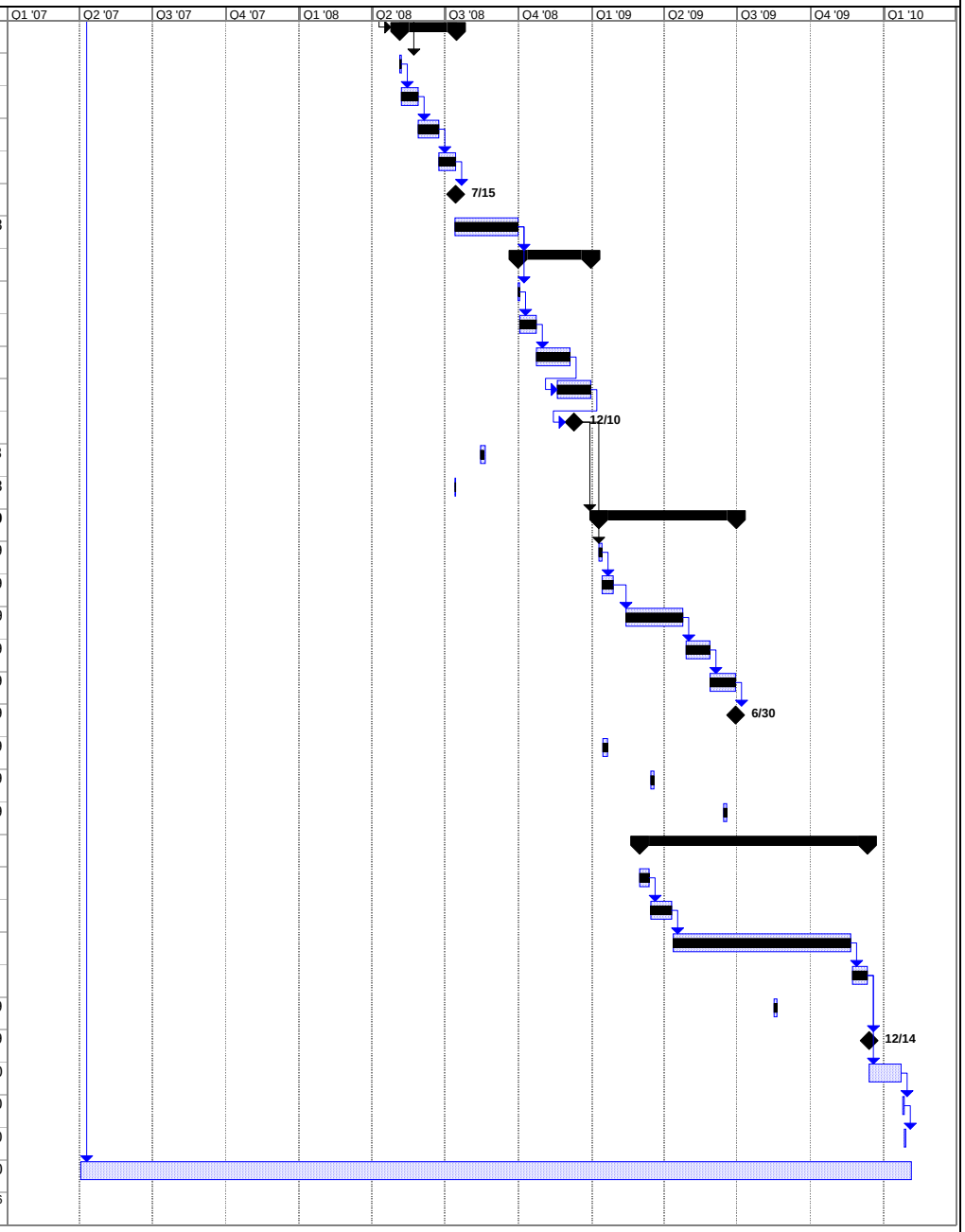

Project: ADC Prop 50 "As Tested" Proj
Date: Wed 2/9/11

Task		Summary		Rolled Up Progress		Project Summary	
Progress		Rolled Up Task		Split		Group By Summary	
Milestone		Rolled Up Milestone		External Tasks		Deadline	