RECLAMATION

Managing Water in the West

Pumped Storage Evaluation Special Study

Yellowtail, Seminoe, and Trinity Sites

Final Phase 2 Report

Volume II
Phase 2 Report Figures

U.S. Department of the Interior
Bureau of Reclamation Power Resources Office
Denver, Colorado

July 2013

Mission Statements

The mission of the Department of the Interior is to protect and provide access to our Nation's natural and cultural heritage and honor our trust responsibilities to Indian Tribes and our commitments to island communities.

The mission of the Bureau of Reclamation is to manage, develop, and protect water and related resources in an environmentally and economically sound manner in the interest of the American public.

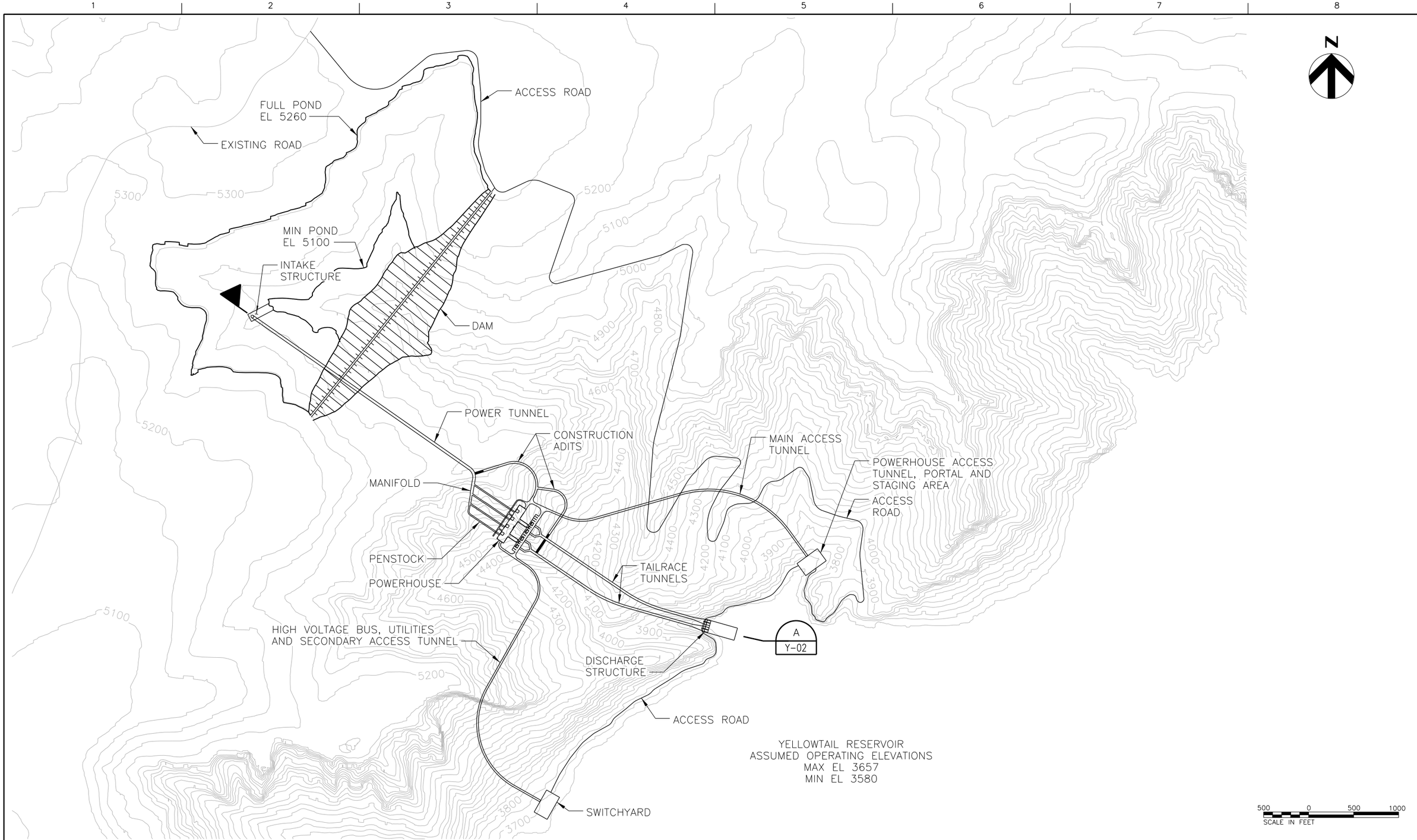

HDR
HDR Engineering, Inc.

ISSUE	DATE	DESCRIPTION
–	–	–

PROJECT MANAGER	DAVID R GRADY
DRAWN BY	RM MAKEE
PROJECT NUMBER	000000000192999

PRELIMINARY NOT FOR CONSTRUCTION OR RECORDING

U.S. BUREAU OF RECLAMATION

YELLOWTAIL SITE 5A PUMPED STORAGE EVALUATION

SITE PLAN

FILENAME	Y-01.dgn
SCALE	1"= 500'

FIGURE
Y-01

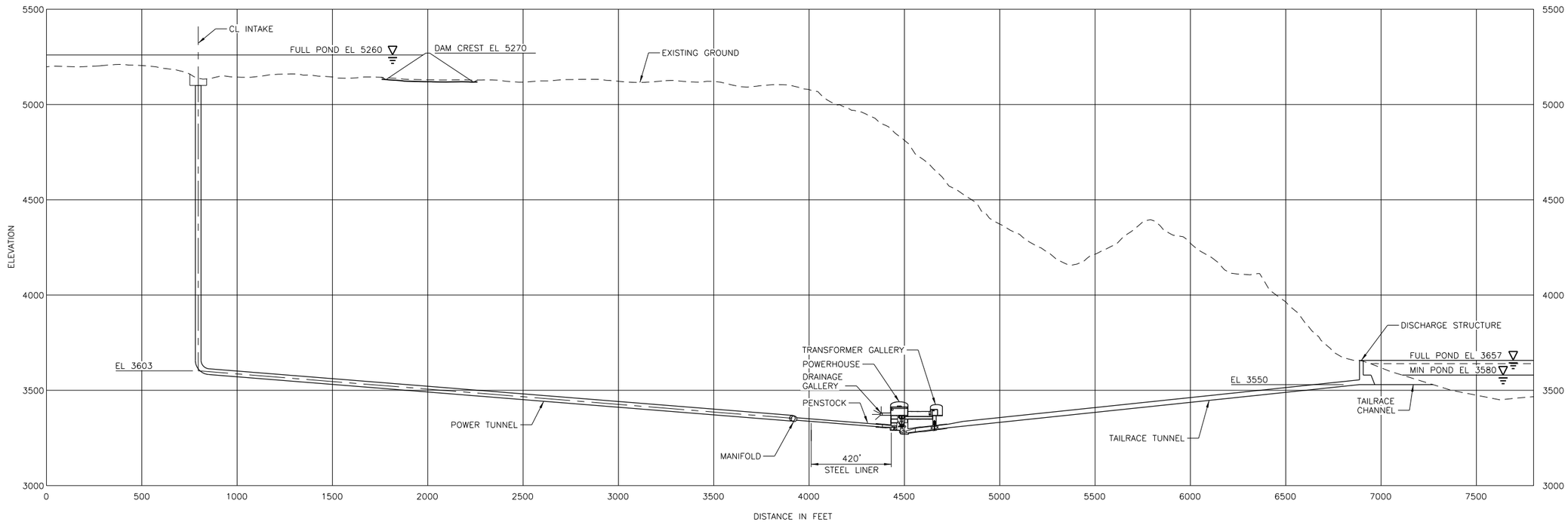

PROFILE
SCALE: 1" =300'
A
Y-01

HDR
HDR Engineering, Inc.

ISSUE	DATE	DESCRIPTION
–	–	–

PROJECT MANAGER	DAVID R GRADY
DRAWN BY	RM MAKEE
PROJECT NUMBER	000000000192999

PRELIMINARY NOT FOR CONSTRUCTION OR RECORDING

U.S. BUREAU OF RECLAMATION

YELLOWTAIL SITE 5A PUMPED STORAGE EVALUATION

PROFILE

FILENAME	Y-02.dgn
SCALE	1"= 300'

FIGURE
Y-02

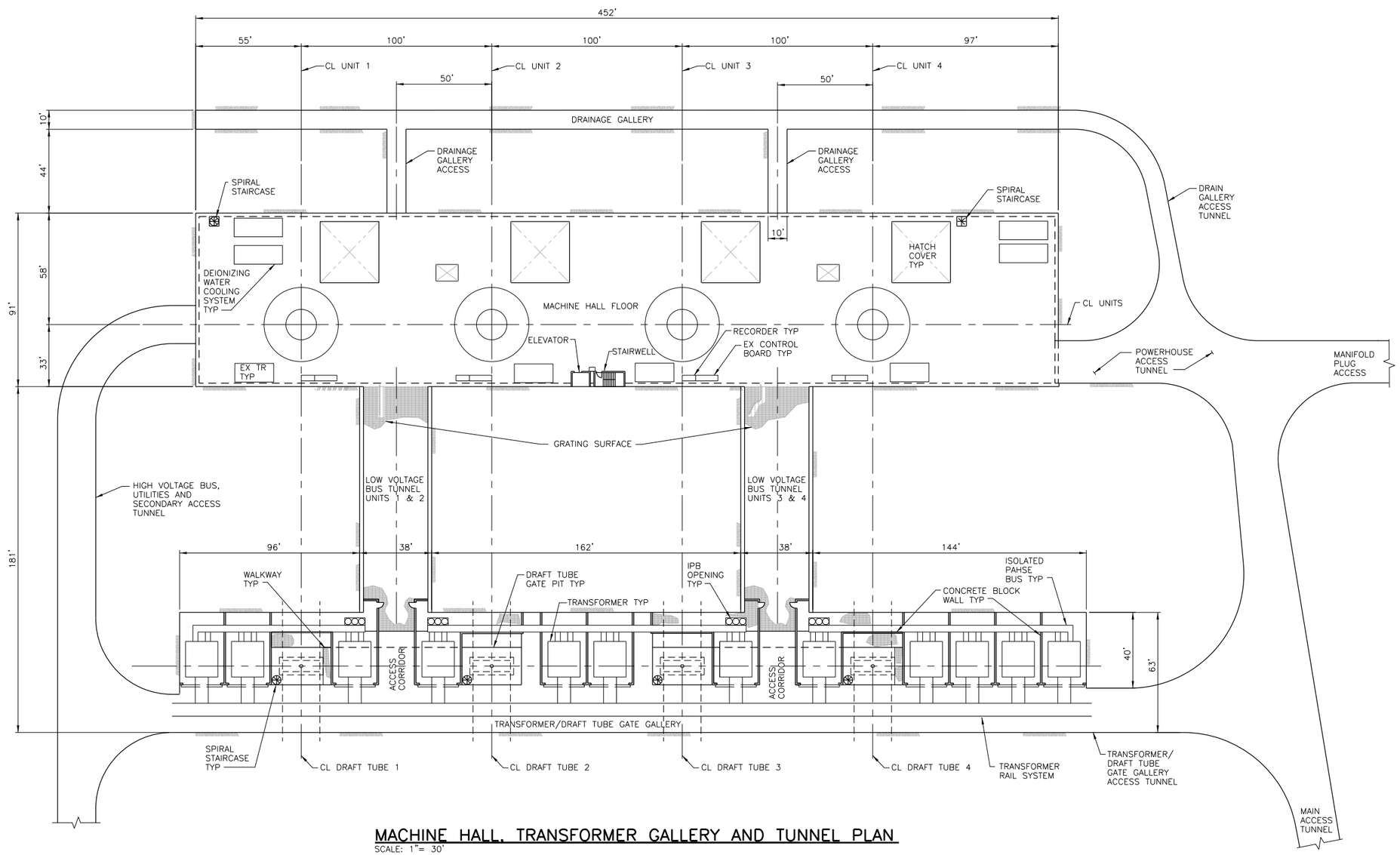

MACHINE HALL, TRANSFORMER GALLERY AND TUNNEL PLAN

SCALE: 1"= 30'

HDR Engineering, Inc.

ISSUE	DATE	DESCRIPTION
–	–	–

PROJECT MANAGER	DAVID R GRADY
DRAWN BY	DK LONG
PROJECT NUMBER	000000000192999

PRELIMINARY NOT FOR CONSTRUCTION OR RECORDING

U.S. BUREAU OF RECLAMATION

YELLOWTAIL SITE 5A PUMPED STORAGE EVALUATION

VARIABLE SPEED UNITS POWERHOUSE GENERAL ARRANGEMENT PLAN

FILENAME	Y-03.dgn
SCALE	AS NOTED

FIGURE **Y-03**

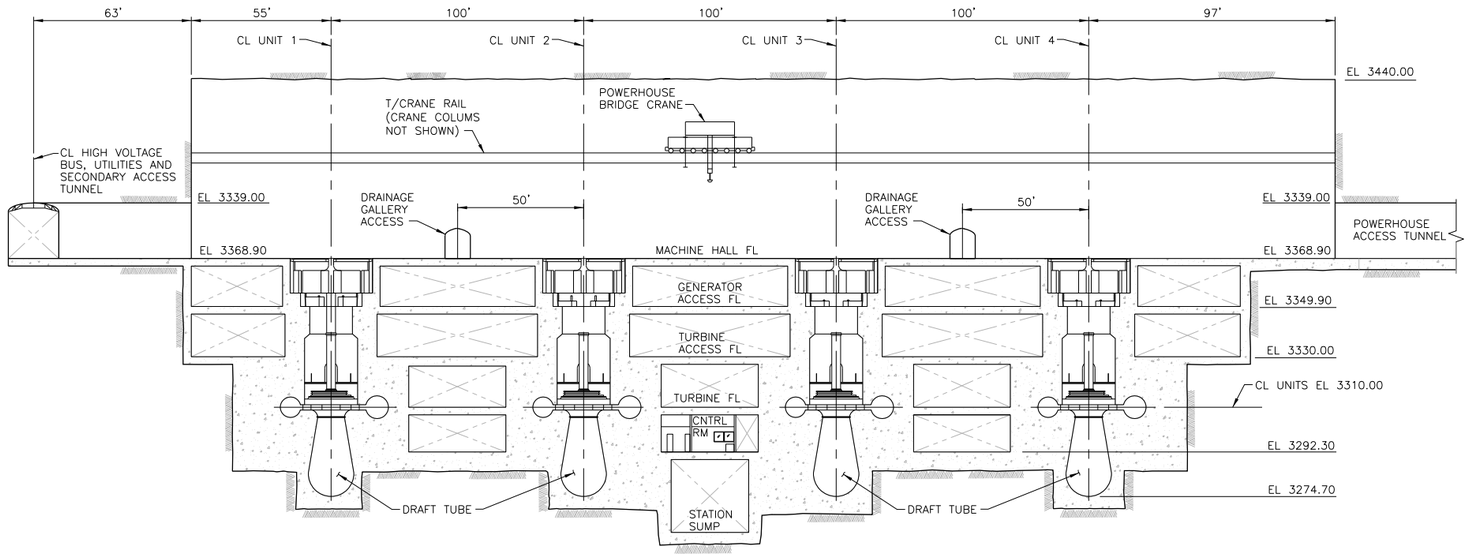

LONGITUDINAL SECTION

SCALE: 1"= 30'

HDR

HDR Engineering, Inc.

ISSUE	DATE	DESCRIPTION
–	–	–

PROJECT MANAGER	DAVID R GRADY
DRAWN BY	DK LONG
PROJECT NUMBER	000000000192999

PRELIMINARY NOT FOR CONSTRUCTION OR RECORDING

U.S. BUREAU OF RECLAMATION

YELLOWTAIL SITE 5A PUMPED STORAGE EVALUATION

VARIABLE SPEED UN ITS POWERHOUSE GENERAL ARRANGEMENT LONGITUDINAL SECTION

FILENAME	Y-04.dgn
SCALE	AS NOTED

FIGURE **Y-04**

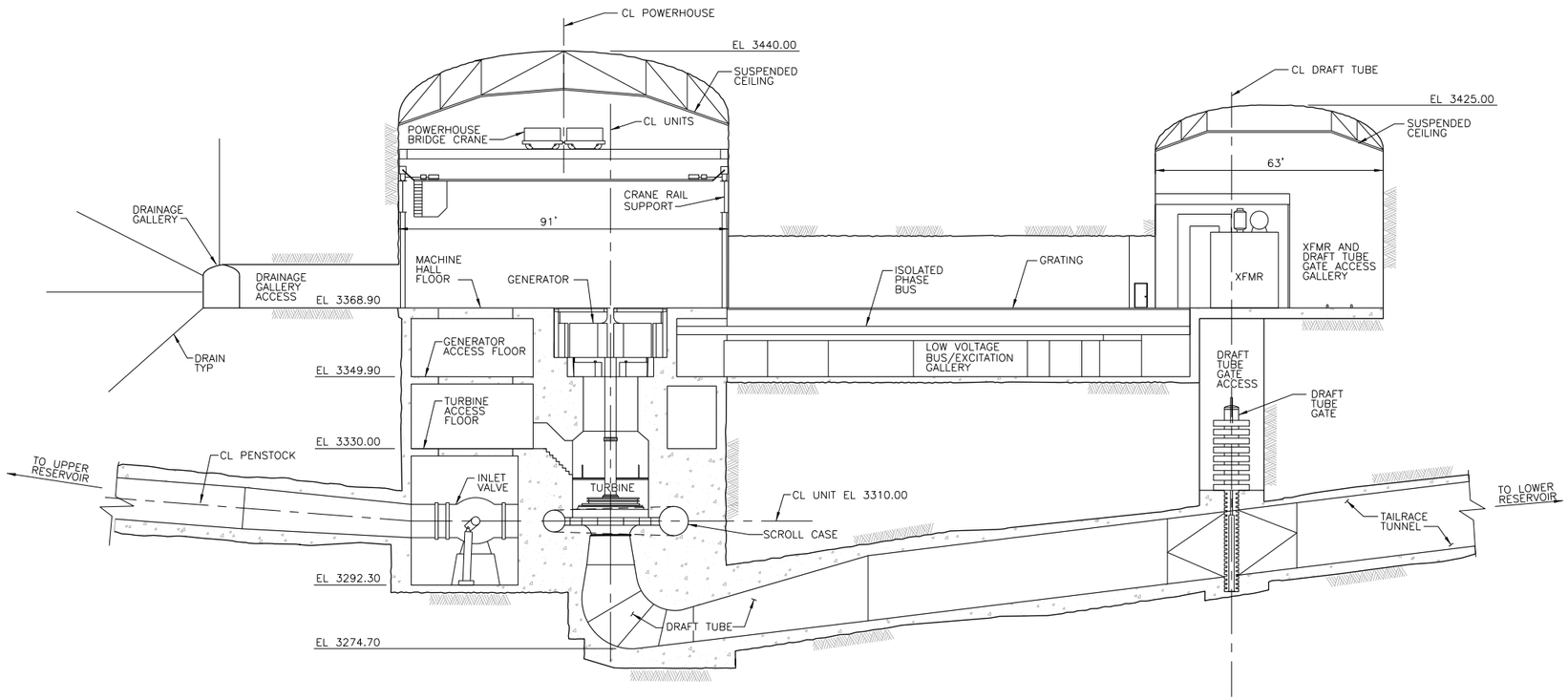

TRANSVERSE SECTION
SCALE: 1"= 20'

HDR
HDR Engineering, Inc.

ISSUE	DATE	DESCRIPTION
–	–	–

PROJECT MANAGER	DAVID R GRADY
DRAWN BY	DK LONG
PROJECT NUMBER	000000000192999

PRELIMINARY NOT FOR CONSTRUCTION OR RECORDING

U.S. BUREAU OF RECLAMATION

YELLOWTAIL SITE 5A PUMPED STORAGE EVALUATION

VARIABLE SPEED UNITS POWERHOUSE GENERAL ARRANGEMENT TRANSVERSE SECTION

FILENAME	Y-05.dgn
SCALE	AS NOTED

FIGURE
Y-05

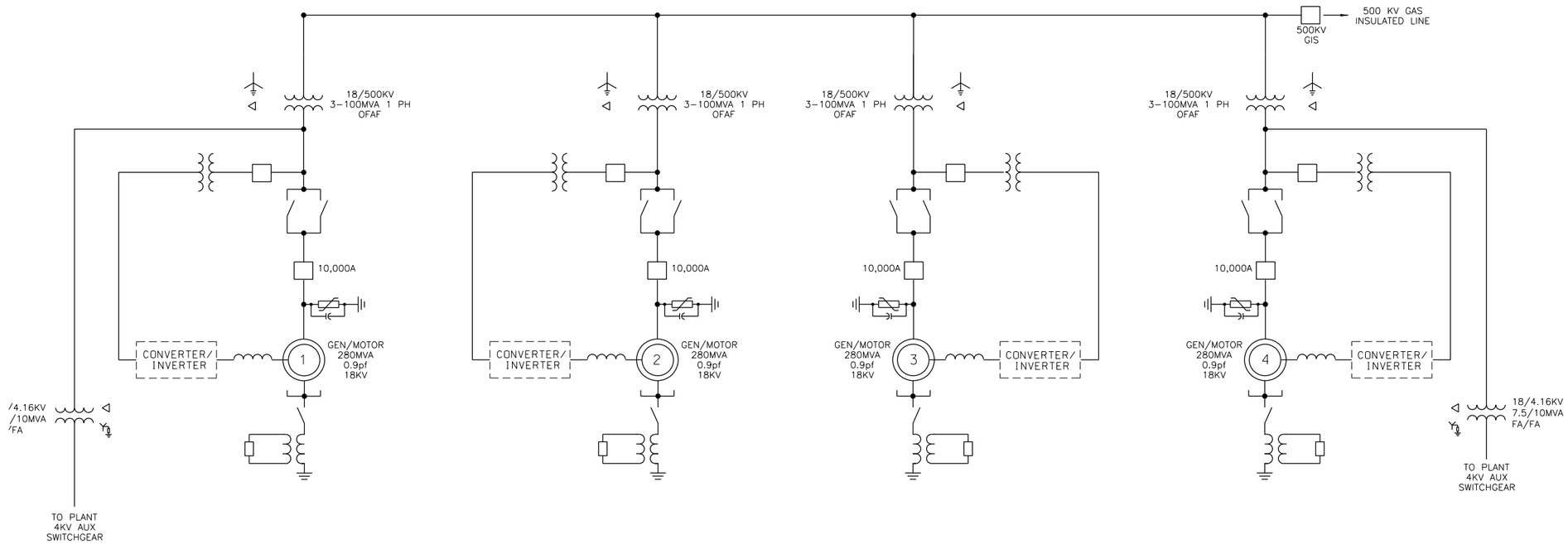

HDR Engineering, Inc.

ISSUE	DATE	DESCRIPTION
–	–	–

PROJECT MANAGER	DAVID R GRADY
DRAWN BY	DK LONG
PROJECT NUMBER	000000000192999

PRELIMINARY NOT FOR CONSTRUCTION OR RECORDING

U.S. BUREAU OF RECLAMATION

YELLOWTAIL SITE 5A PUMPED STORAGE EVALUATION

VARIABLE SPEED UNITS POWERHOUSE ONE LINE DIAGRAM

FILENAME	Y-06.dgn
SCALE	NONE

FIGURE **Y-06**

Pump storage at Yellowtail 230 kV option

WESTERN ELECTRICITY COORDINATING COUNCIL
2017 HS1A APPROVED BASE CASE
FRI, MAR 22 2013 16:49

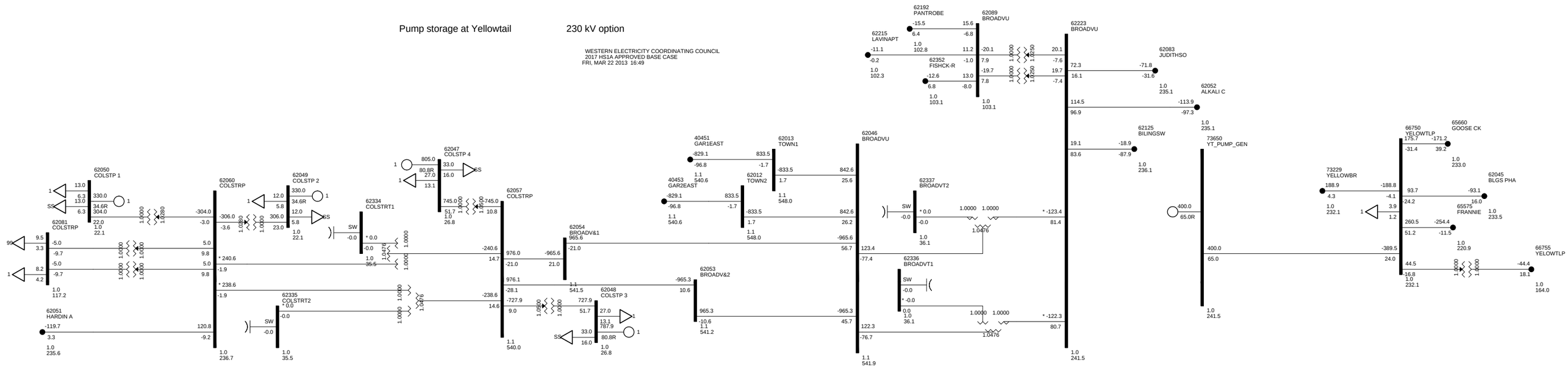

Yellowtail pump storage project -- 230 connection at PPL near YT--gen at 400 MW

Pump storage at Yellowtail 230 kV option

WESTERN ELECTRICITY COORDINATING COUNCIL
2017 HS1A APPROVED BASE CASE
FRI, MAR 22 2013 16:44

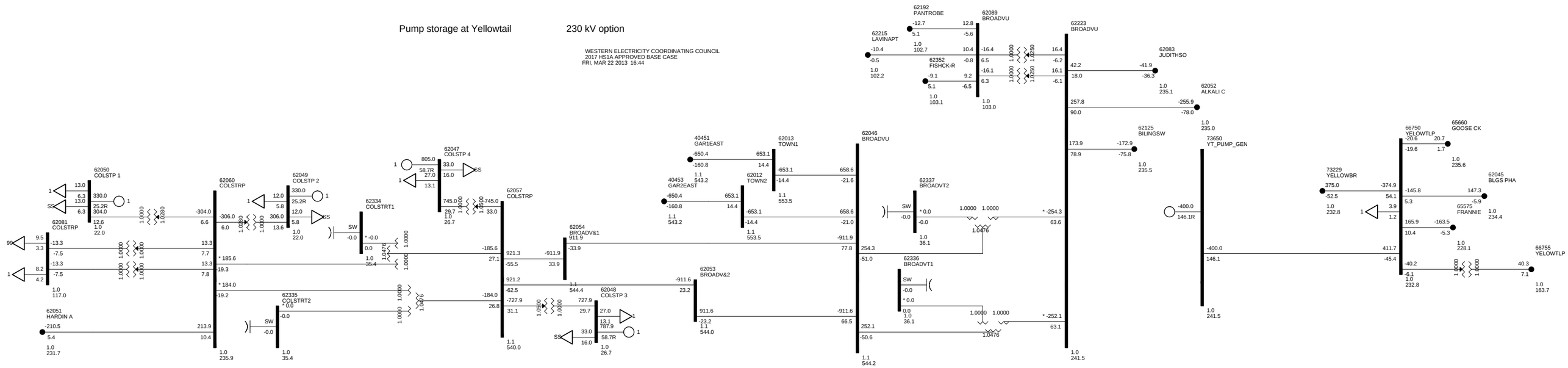

Yellowtail pump storage project -- 230 connection at PPL near YT-- pump at 400 MW

Pump storage at Yellowtail 230 kV option

WESTERN ELECTRICITY COORDINATING COUNCIL
2017 HS1A APPROVED BASE CASE
FRI, MAR 22 2013 16:47

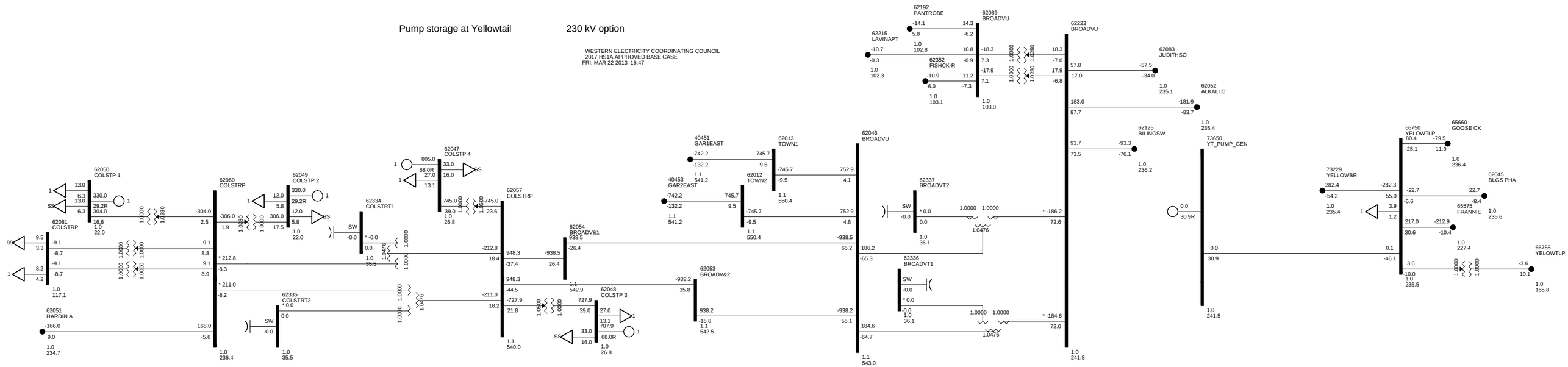

Yellowtail pump storage project -- 230 connection at PPL near YT-- reactive

Pump storage at Yellowtail 230 kV option

WESTERN ELECTRICITY COORDINATING COUNCIL
2017 HS1A APPROVED BASE CASE
FRI, MAR 22 2013 16:33

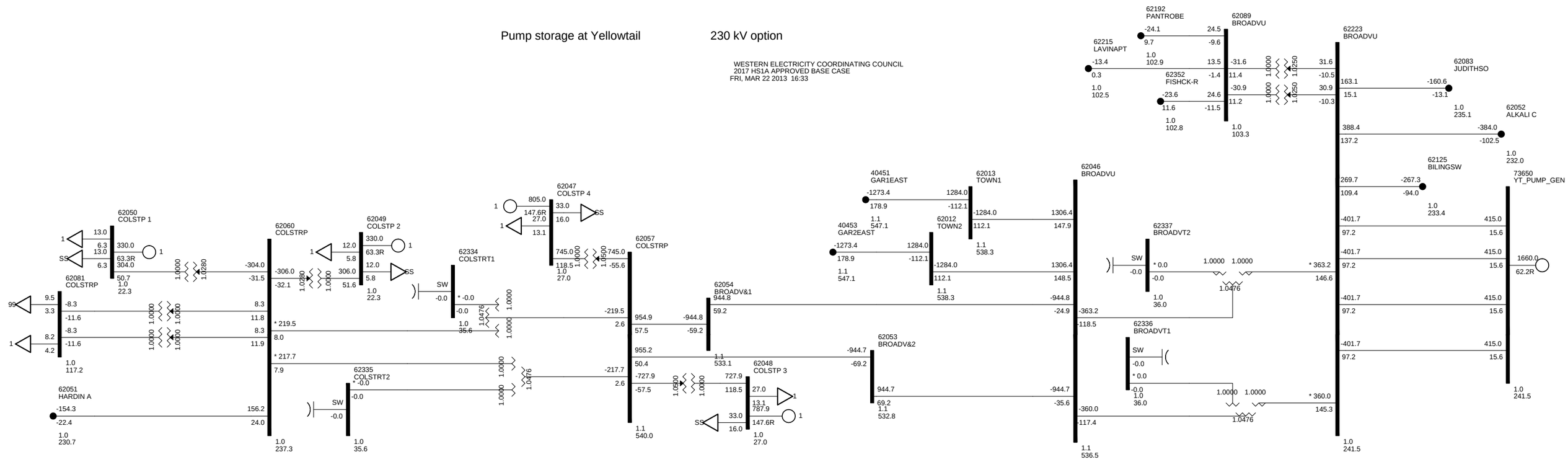

Yellowtail pump storage project -- 230 connection at Broadview -- gen at 1660 MW

Pump storage at Yellowtail 230 kV option

WESTERN ELECTRICITY COORDINATING COUNCIL
2017 HS1A APPROVED BASE CASE
FRI, MAR 22 2013 16:36

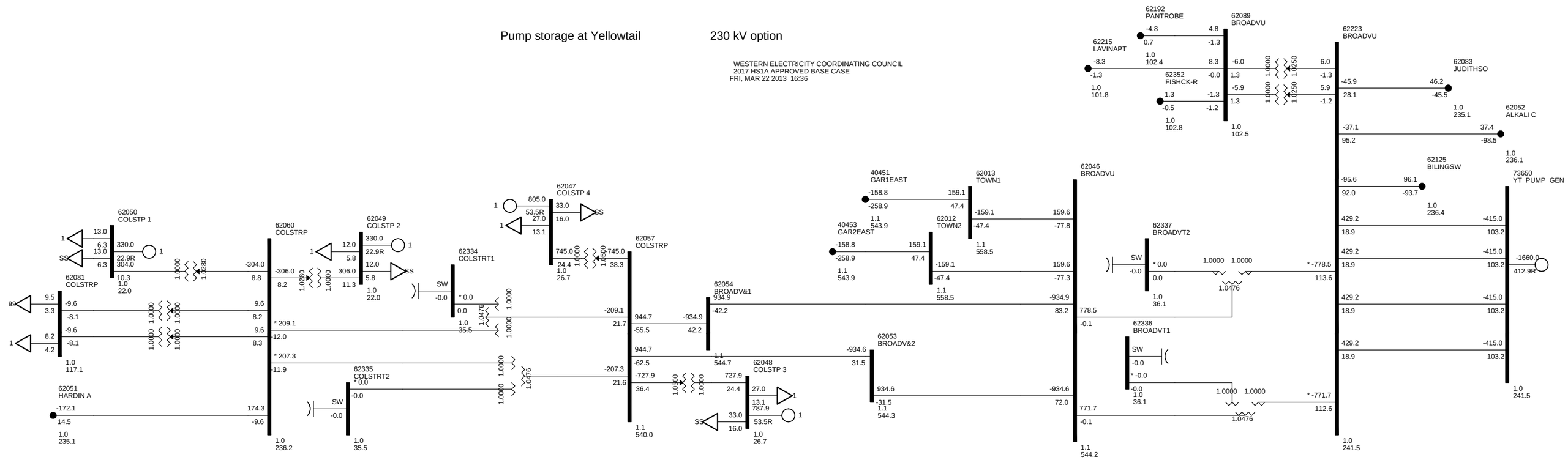

Yellowtail pump storage project -- 230 connection at Broadview -- pump at 1660

Pump storage at Yellowtail 230 kV option

WESTERN ELECTRICITY COORDINATING COUNCIL
2017 HS1A APPROVED BASE CASE
FRI, MAR 22 2013 16:36

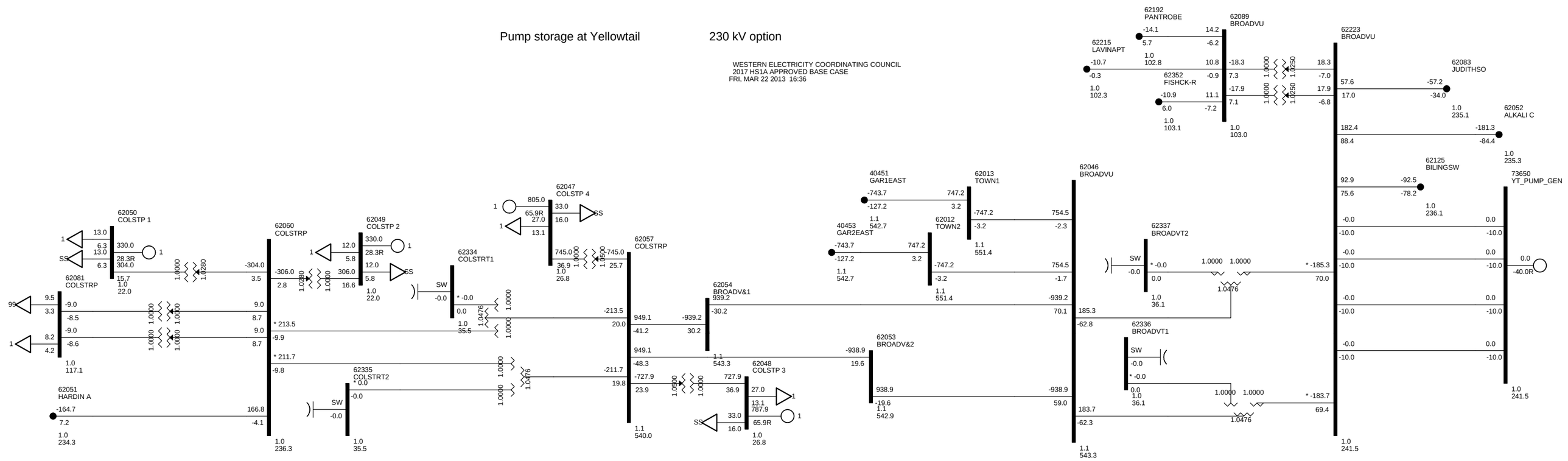

Yellowtail pump storage project -- 230 connection at Broadview -- reactive

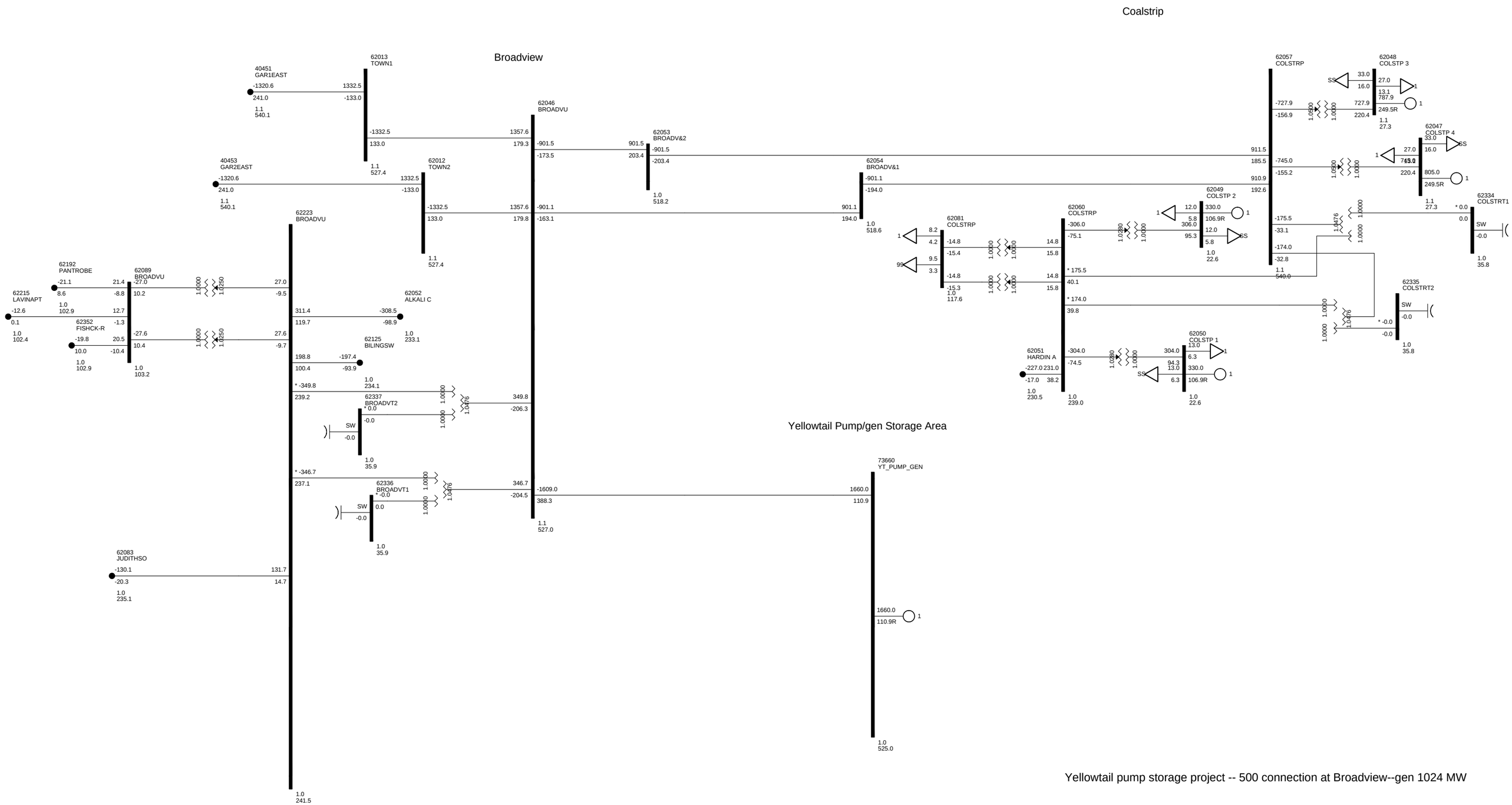

Yellowtail pump storage project -- 500 connection at Broadview--gen 1024 MW

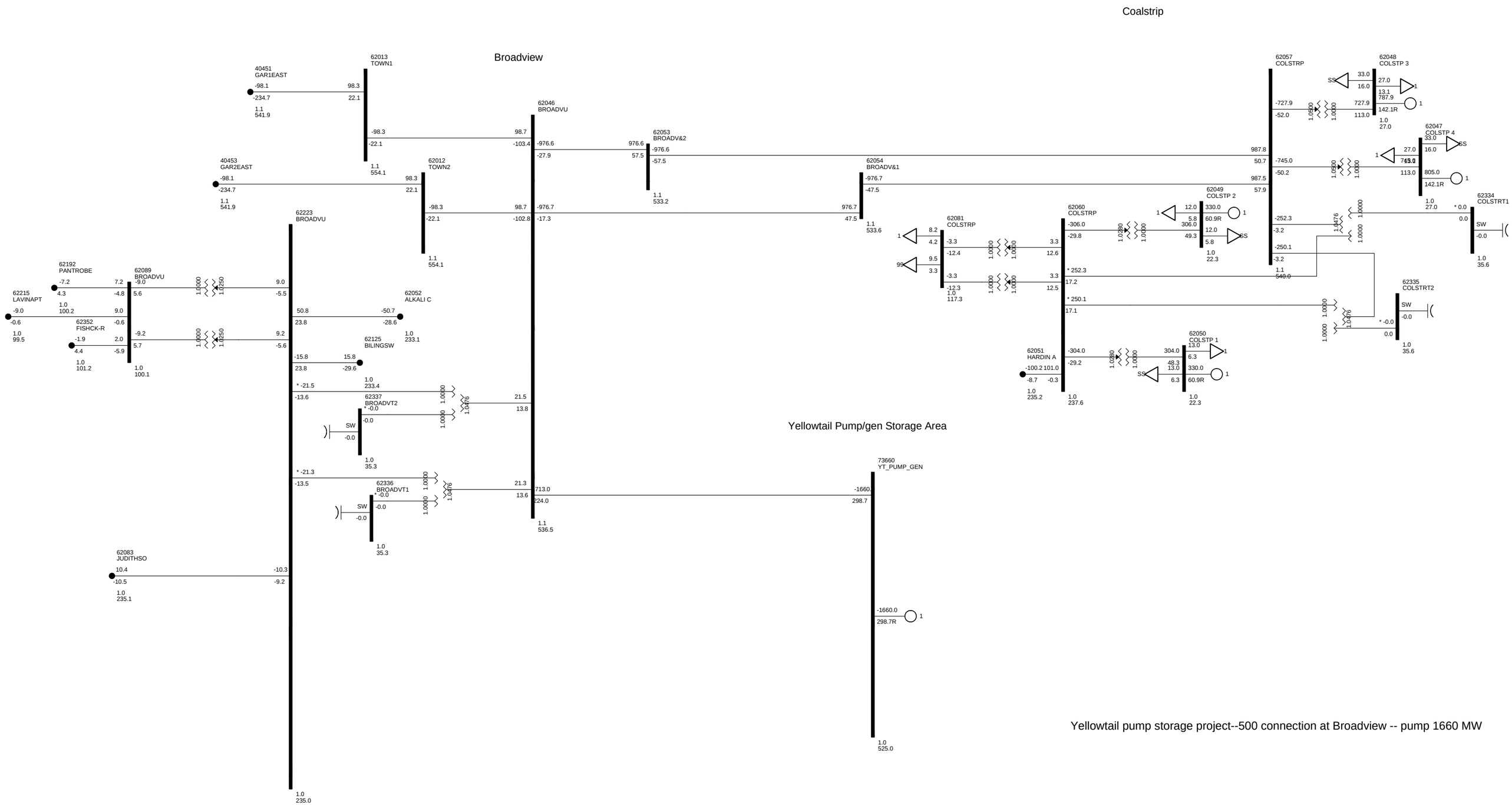

Yellowtail pump storage project--500 connection at Broadview -- pump 1660 MW

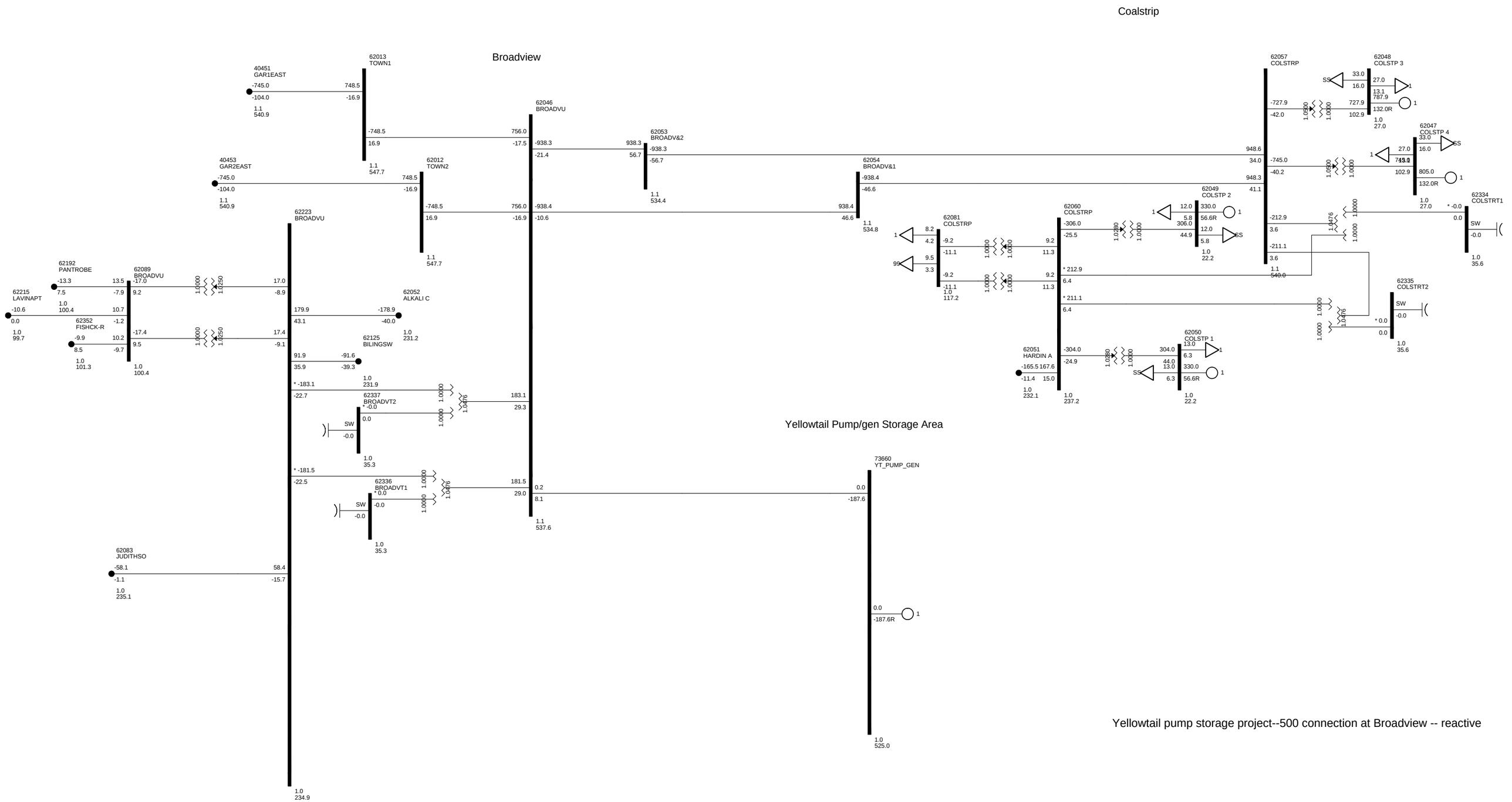

Yellowtail pump storage project--500 connection at Broadview -- reactive

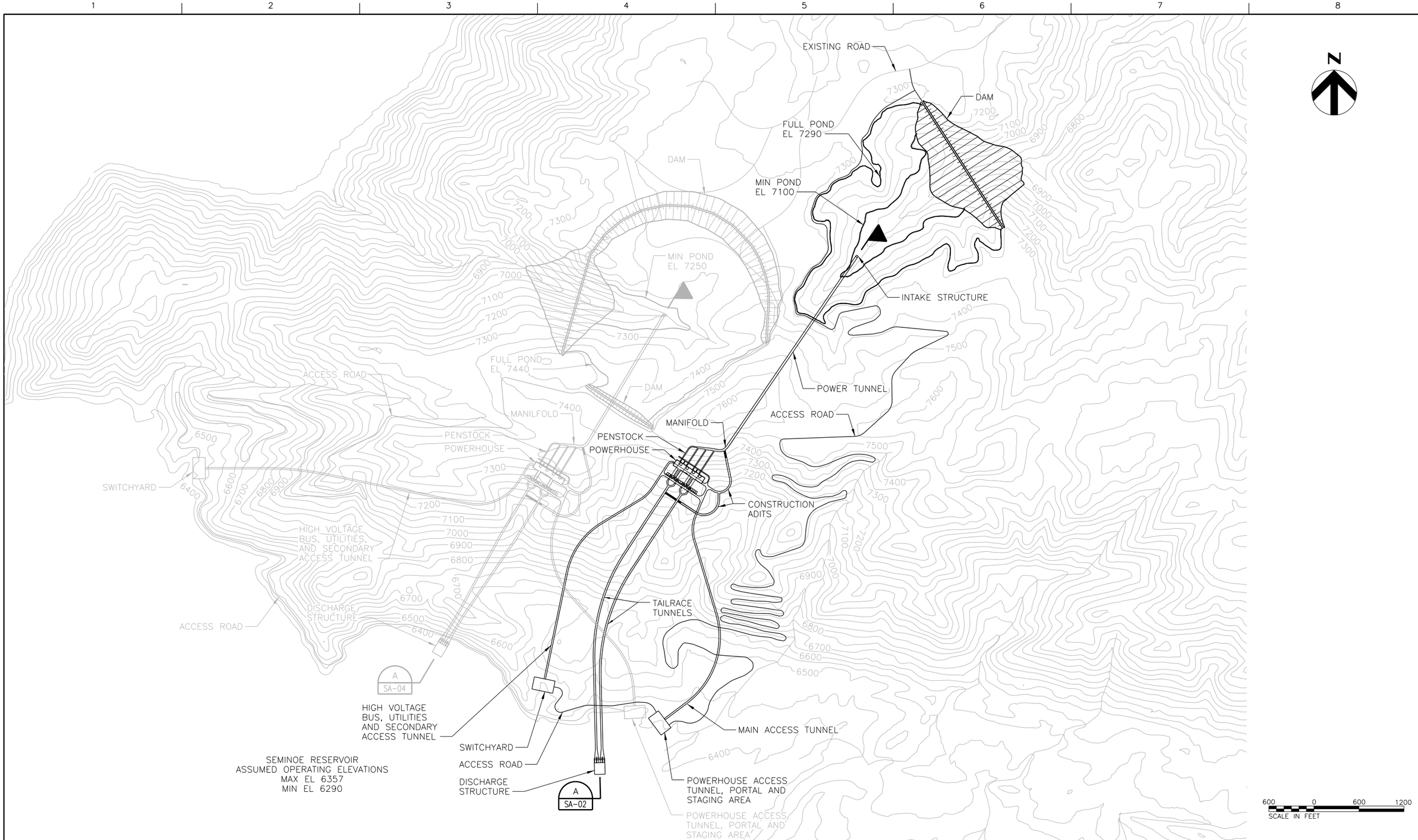

HDR

HDR Engineering, Inc.

ISSUE	DATE	DESCRIPTION
–	–	–

PROJECT MANAGER	DAVID R GRADY
DRAWN BY	RM MAKEE
PROJECT NUMBER	000000000192999

PRELIMINARY NOT FOR CONSTRUCTION OR RECORDING

U.S. BUREAU OF RECLAMATION

SEMINOE SITE 5A2 AND 5A3 PUMPED STORAGE EVALUATION

SITE 5A2 PLAN

FILENAME	SA-01.dgn
SCALE	1"= 600'

FIGURE

SA-01

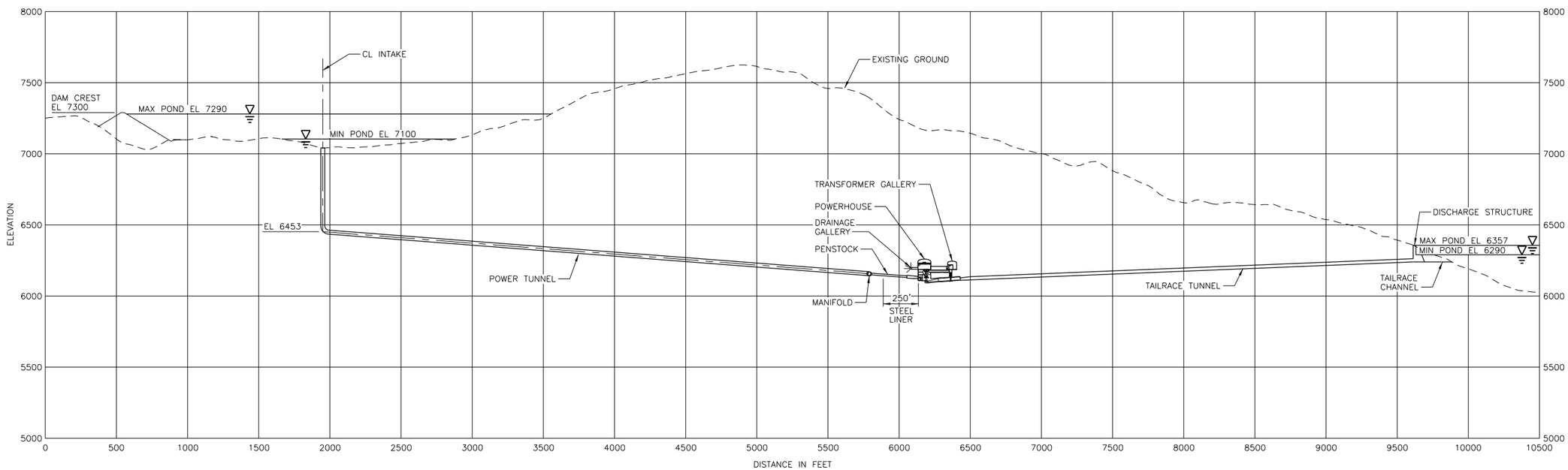

PROFILE (A / SA-01)
SCALE: 1"= 400'

HDR
HDR Engineering, Inc.

ISSUE	DATE	DESCRIPTION
–	–	–

PROJECT MANAGER	DAVID R GRADY
DRAWN BY	RM MAKEE
PROJECT NUMBER	000000000192999

PRELIMINARY NOT FOR CONSTRUCTION OR RECORDING

U.S. BUREAU OF RECLAMATION

SEMINOE SITE 5A2 AND 5A3 PUMPED STORAGE EVALUATION

SITE 5A2 PROFILE

FILENAME	SA-02.dgn
SCALE	AS NOTED

FIGURE
SA-02

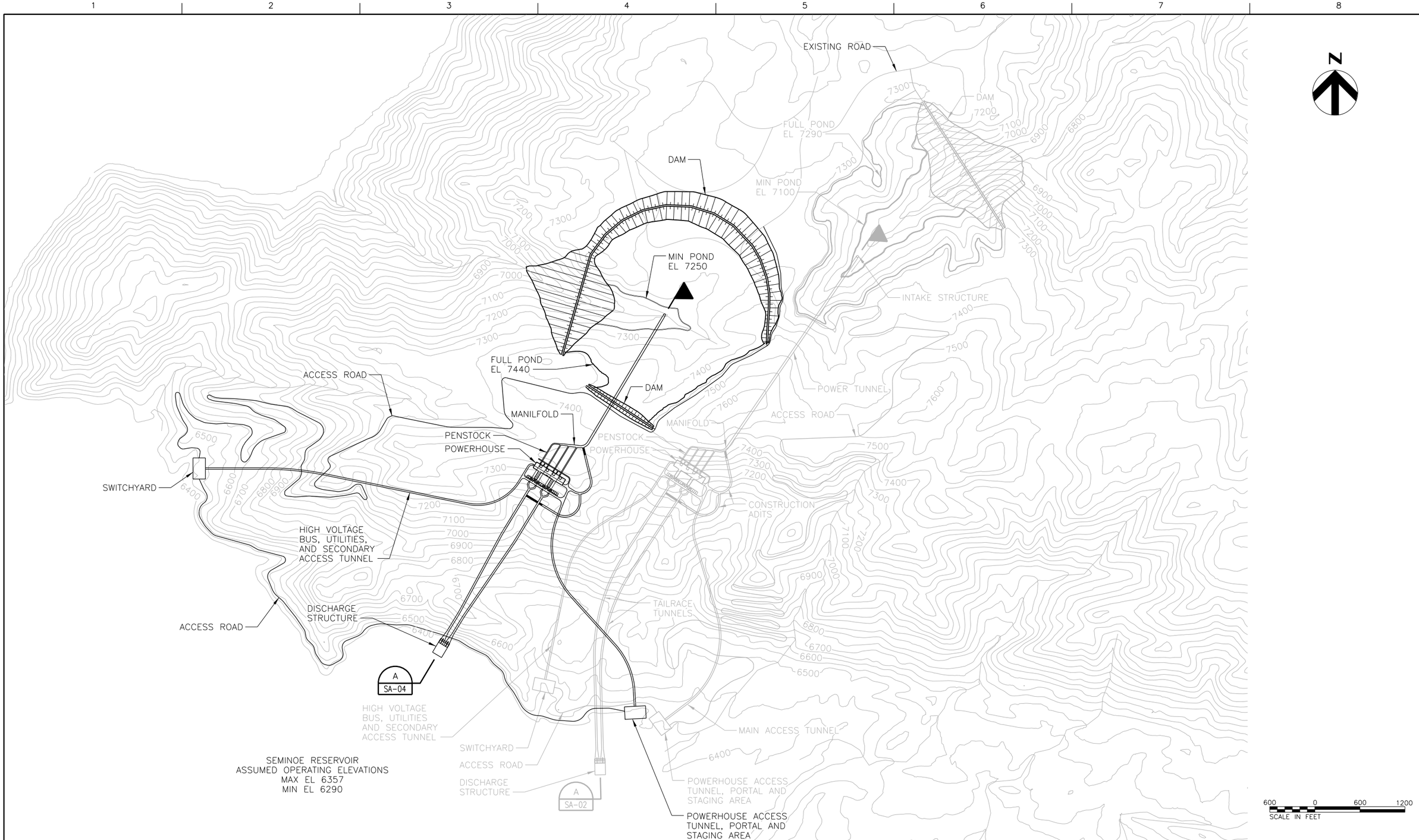

HDR

HDR Engineering, Inc.

ISSUE	DATE	DESCRIPTION
–	–	–

PROJECT MANAGER	DAVID R GRADY
DRAWN BY	RM MAKEE
PROJECT NUMBER	000000000192999

PRELIMINARY NOT FOR CONSTRUCTION OR RECORDING

U.S. BUREAU OF RECLAMATION

SEMINOE SITE 5A2 AND 5A3 PUMPED STORAGE EVALUATION

SITE 5A3 PLAN

FILENAME	SA-03.dgn
SCALE	1"= 600'

FIGURE **SA-03**

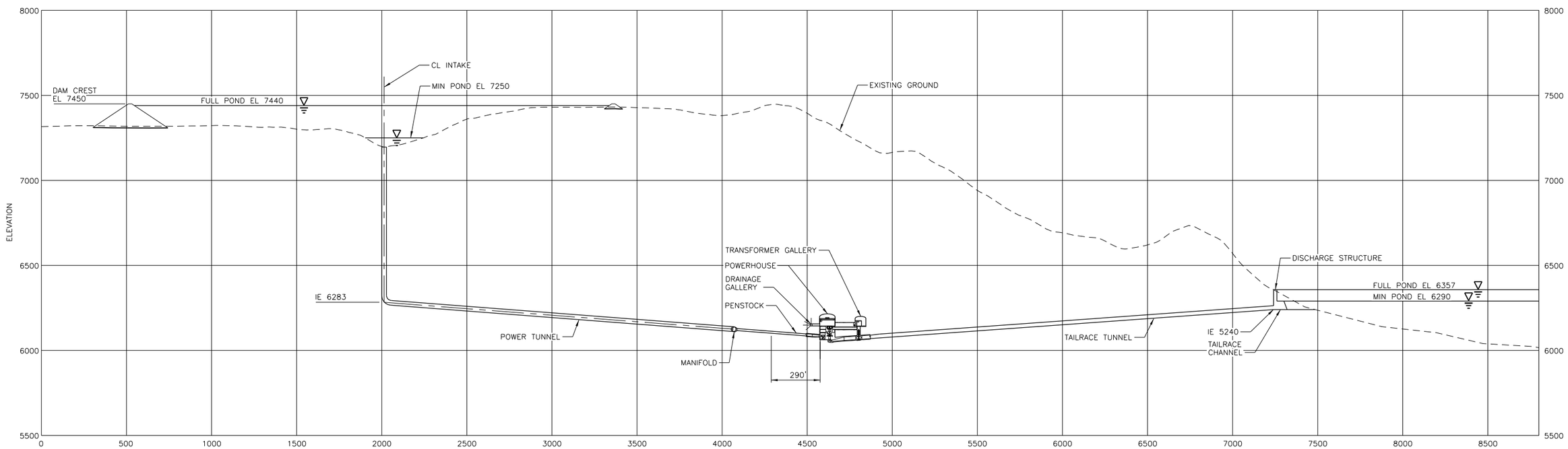

PROFILES A
SCALE: 1"= 300' SA-03

HDR
HDR Engineering, Inc.

ISSUE	DATE	DESCRIPTION
–	–	–

PROJECT MANAGER	DAVID R GRADY
DRAWN BY	RM MAKEE
PROJECT NUMBER	000000000192999

PRELIMINARY NOT FOR CONSTRUCTION OR RECORDING

U.S. BUREAU OF RECLAMATION

SEMINOE SITE 5A2 AND 5A3 PUMPED STORAGE EVALUATION

SITE 5A3 PROFILE

FILENAME	SA–04.dgn
SCALE	1"= 300'

FIGURE
SA-04

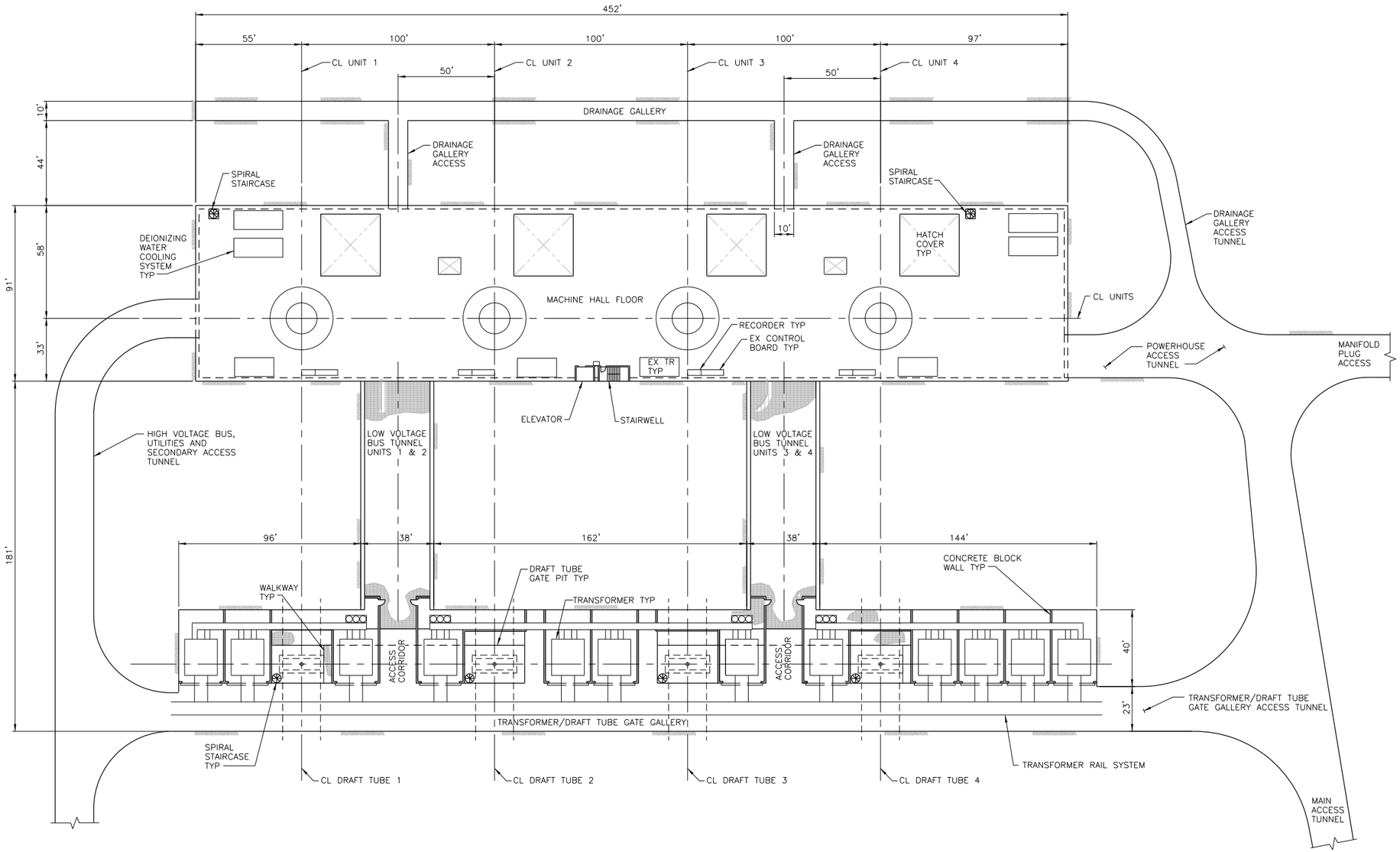

MACHINE HALL, TRANSFORMER GALLERY AND TUNNEL PLAN

SCALE: 1"= 30'

HDR

HDR Engineering, Inc.

ISSUE	DATE	DESCRIPTION
–	–	–

PROJECT MANAGER	DAVID R GRADY
DRAWN BY	DK LONG
PROJECT NUMBER	000000000192999

PRELIMINARY NOT FOR CONSTRUCTION OR RECORDING

U.S. BUREAU OF RECLAMATION

SEMINOE SITE 5A2 AND 5A3 PUMPED STORAGE EVALUATION

VARIABLE SPEED UNITS POWERHOUSE GENERAL ARRANGEMENT PLAN

FILENAME	SA–05.dgn
SCALE	AS NOTED

FIGURE **SA-05**

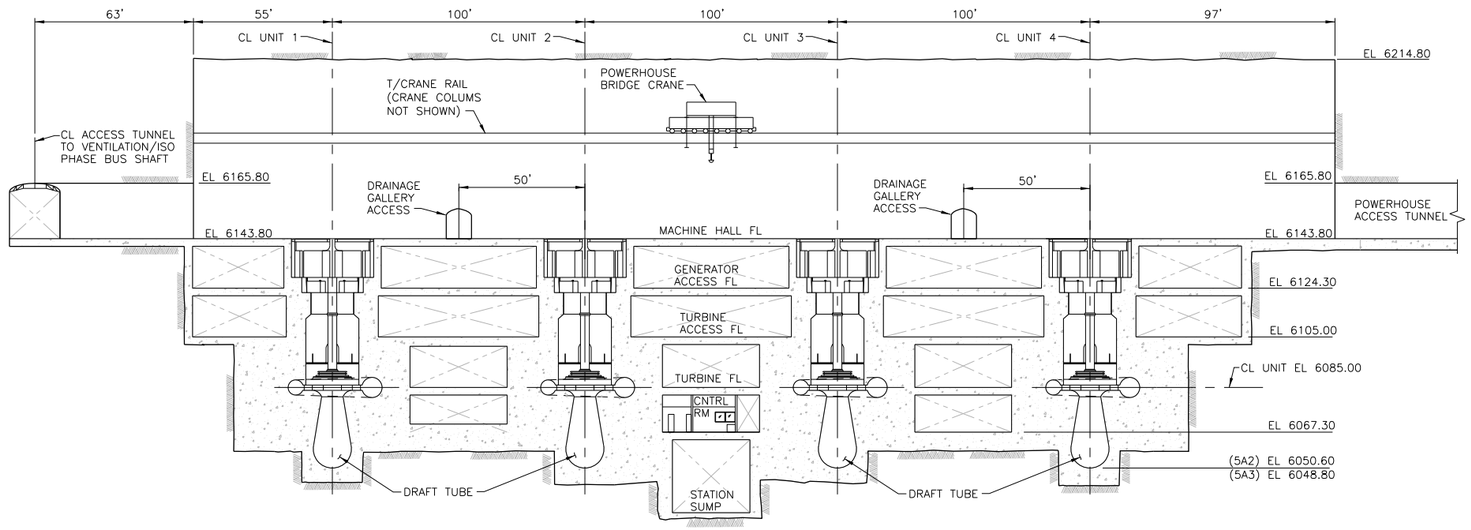

LONGITUDINAL SECTION
SCALE: 1"= 30'

HDR
HDR Engineering, Inc.

ISSUE	DATE	DESCRIPTION
–	–	–

PROJECT MANAGER	DAVID R GRADY
DRAWN BY	DK LONG
PROJECT NUMBER	000000000192999

PRELIMINARY NOT FOR CONSTRUCTION OR RECORDING

U.S. BUREAU OF RECLAMATION

SEMINOE SITE 5A2 AND 5A3 PUMPED STORAGE EVALUATION

VARIABLE SPEED UN ITS POWERHOUSE GENERAL ARRANGEMENT LONGITUDINAL SECTION

FILENAME	SA–06.dgn
SCALE	AS NOTED

FIGURE
SA-06

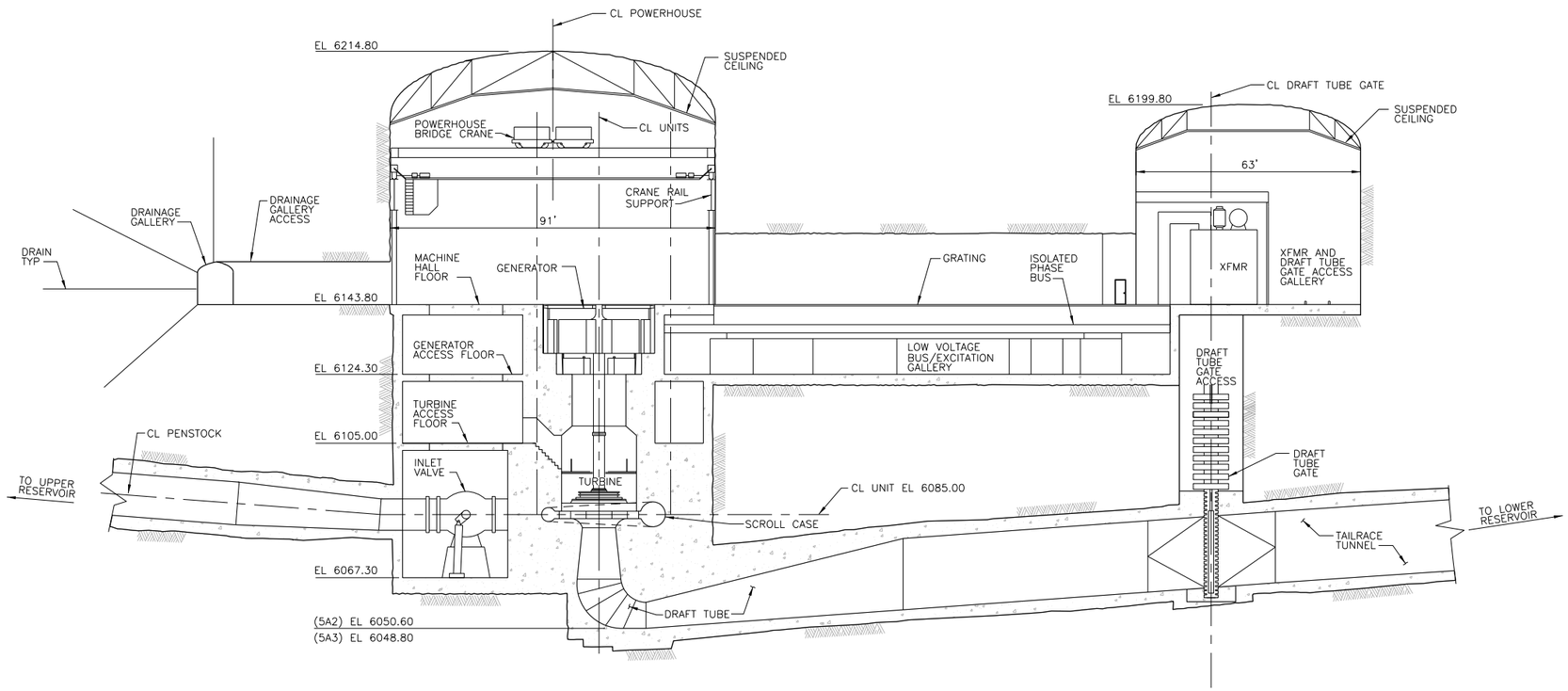

TRANSVERSE SECTION

SCALE: 1"= 20'

HDR

HDR Engineering, Inc.

ISSUE	DATE	DESCRIPTION
–	–	–

PROJECT MANAGER	DAVID R GRADY
DRAWN BY	DK LONG
PROJECT NUMBER	000000000192999

PRELIMINARY NOT FOR CONSTRUCTION OR RECORDING

U.S. BUREAU OF RECLAMATION

SEMINOE SITE 5A2 AND 5A3 PUMPED STORAGE EVALUATION

VARIABLE SPEED UNITS POWERHOUSE GENERAL ARRANGEMENT TRANSVERSE SECTION

FILENAME	SA–07.dgn
SCALE	AS NOTED

FIGURE **SA-07**

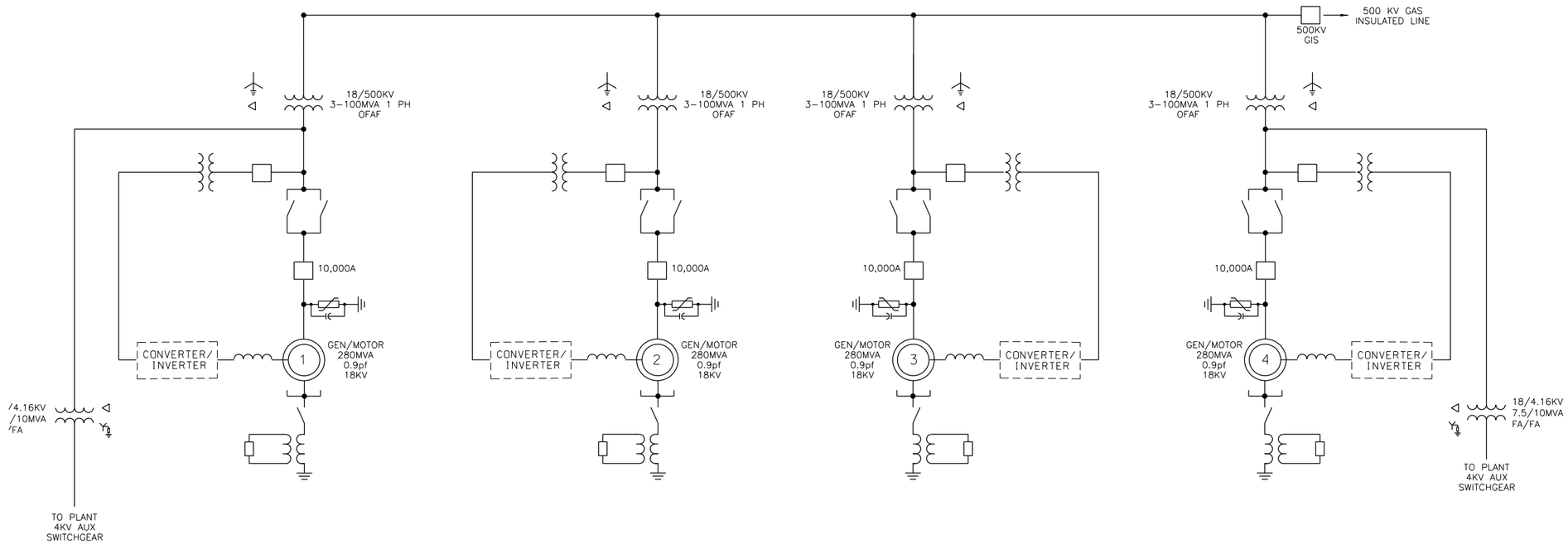

HDR Engineering, Inc.

ISSUE	DATE	DESCRIPTION
–	–	–

PROJECT MANAGER	DAVID R GRADY
DRAWN BY	DK LONG
PROJECT NUMBER	000000000192999

PRELIMINARY NOT FOR CONSTRUCTION OR RECORDING

U.S. BUREAU OF RECLAMATION

SEMINOE SITE 5A2 AND 5A3 PUMPED STORAGE EVALUATION

VARIABLE SPEED UNITS POWERHOUSE ONE LINE DIAGRAM

FILENAME	SA-08.dgn
SCALE	NONE

FIGURE **SA-08**

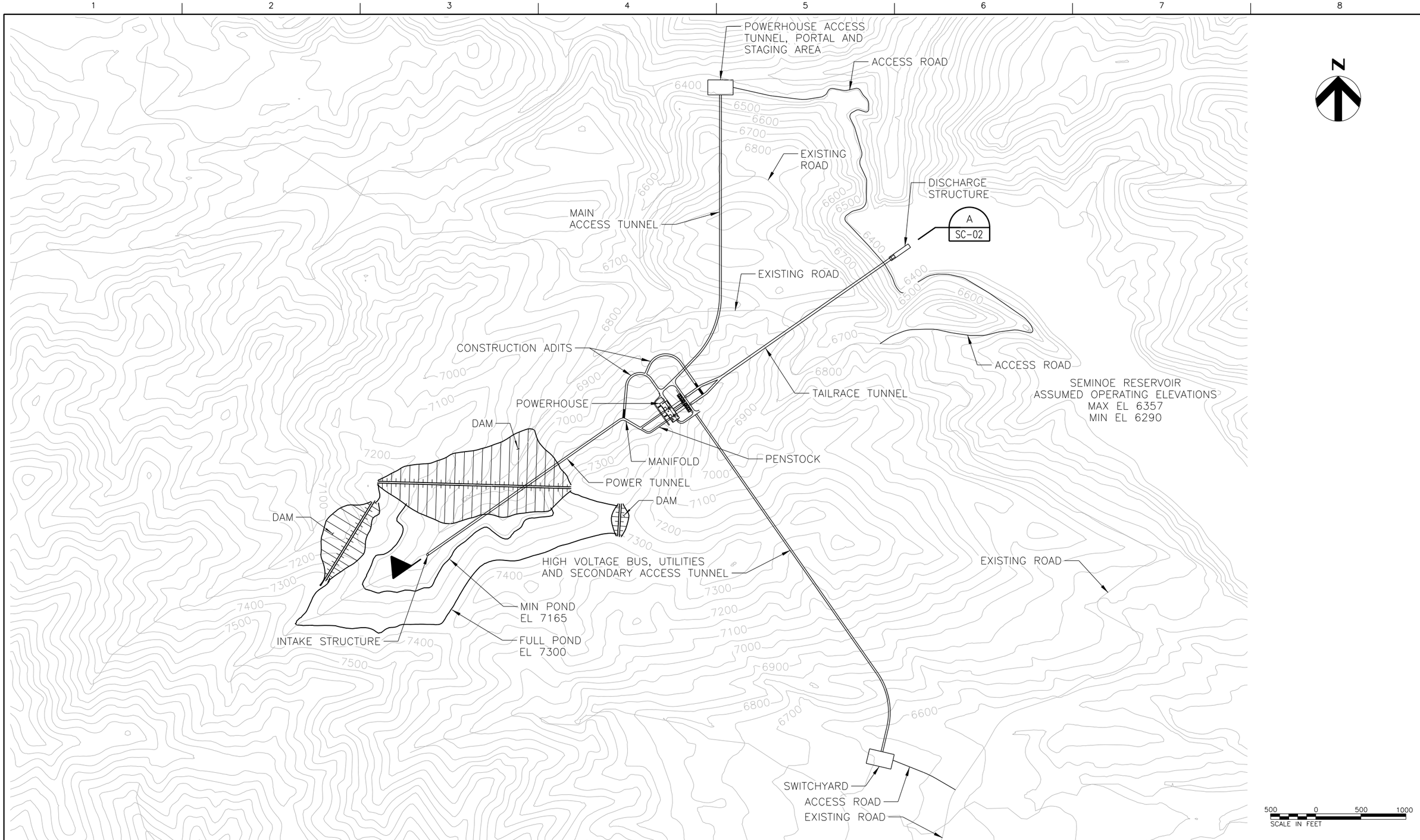

HDR

HDR Engineering, Inc.

ISSUE	DATE	DESCRIPTION
–	–	–

PROJECT MANAGER	DAVID R GRADY
DRAWN BY	RM MAKEE
PROJECT NUMBER	000000000192999

PRELIMINARY NOT FOR CONSTRUCTION OR RECORDING

U.S. BUREAU OF RECLAMATION

SEMINOE SITE 5C PUMPED STORAGE EVALUATION

SITE PLAN

FILENAME	SC-01.dgn
SCALE	1"= 500'

FIGURE **SC-01**

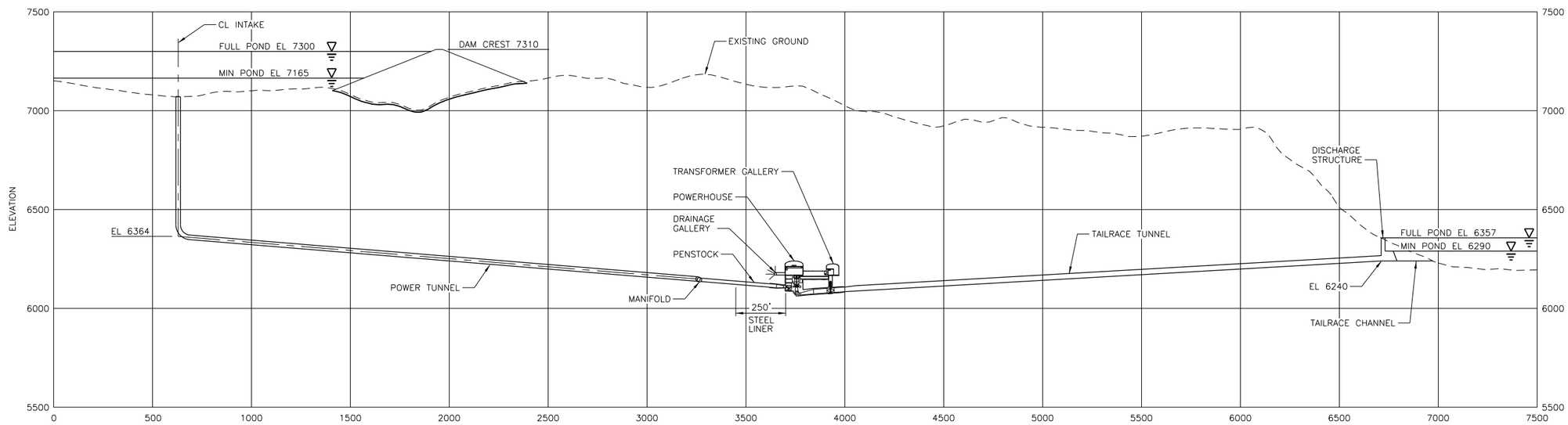

PROFILE (A / SC-01)

SCALE: 1"= 300'

HDR Engineering, Inc.

ISSUE	DATE	DESCRIPTION
–	–	–

PROJECT MANAGER	DAVID R GRADY
DRAWN BY	RM MAKEE
PROJECT NUMBER	000000000192999

PRELIMINARY NOT FOR CONSTRUCTION OR RECORDING

U.S. BUREAU OF RECLAMATION

SEMINOE SITE 5C PUMPED STORAGE EVALUATION

PROFILE

FILENAME	SC-02.dgn
SCALE	AS NOTED

FIGURE **SC-02**

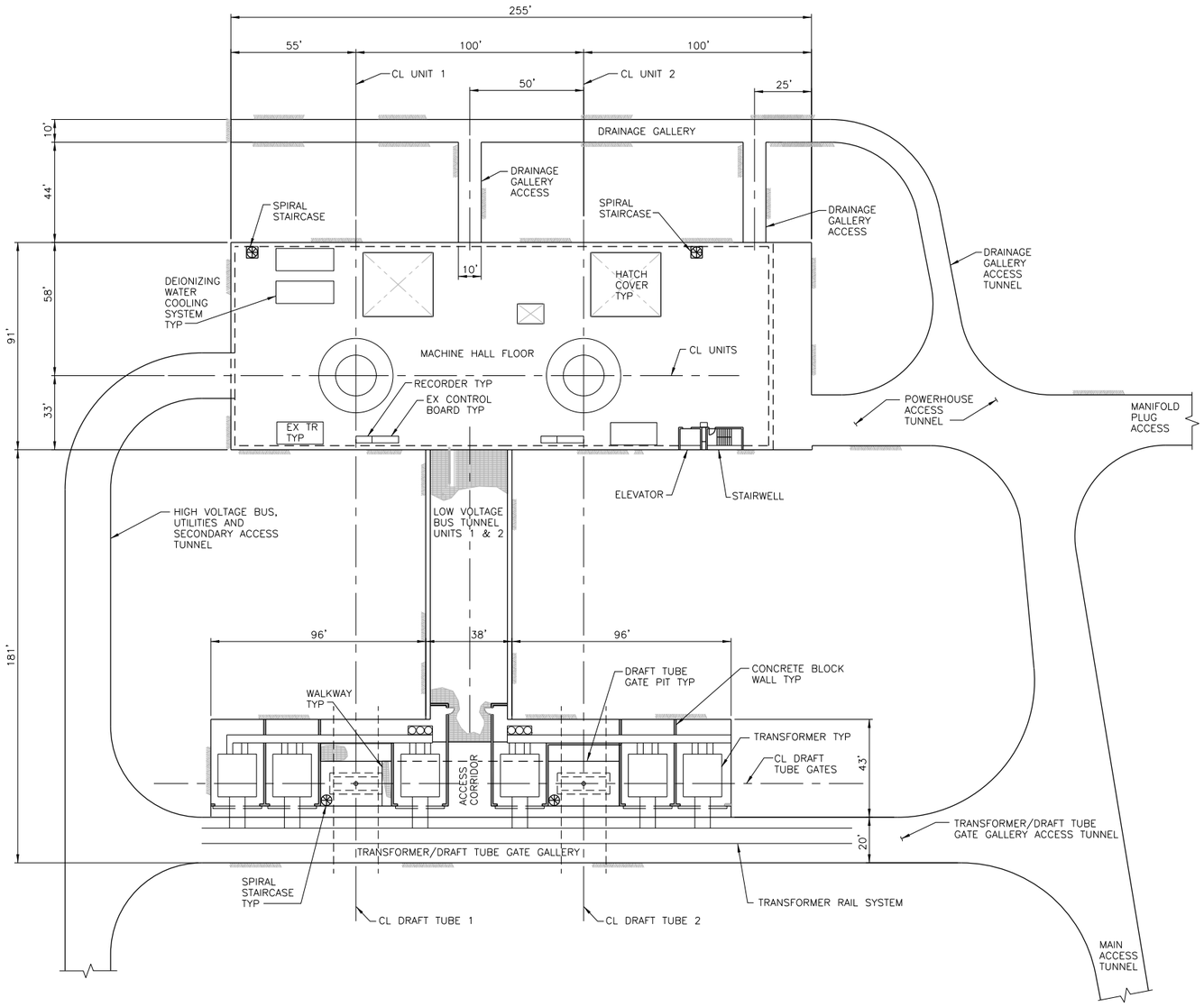

MACHINE HALL, TRANSFORMER GALLERY AND TUNNEL PLAN

SCALE: 1"= 30'

HDR

HDR Engineering, Inc.

ISSUE	DATE	DESCRIPTION
–	–	–

PROJECT MANAGER	DAVID R GRADY
DRAWN BY	DK LONG
PROJECT NUMBER	000000000192999

PRELIMINARY NOT FOR CONSTRUCTION OR RECORDING

U.S. BUREAU OF RECLAMATION

SEMINOE SITE 5C PUMPED STORAGE EVALUATION

VARIABLE SPEED UNITS POWERHOUSE GENERAL ARRANGEMENT PLAN

FILENAME	SC–03.dgn
SCALE	AS NOTED

FIGURE **SC-03**

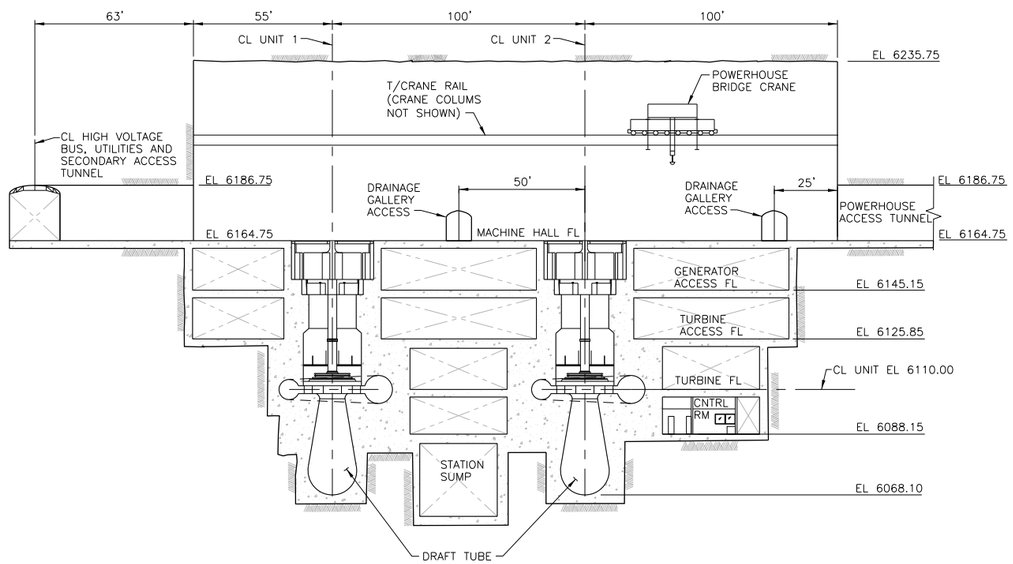

LONGITUDINAL SECTION
SCALE: 1"= 30'

HDR
HDR Engineering, Inc.

ISSUE	DATE	DESCRIPTION
–	–	–

PROJECT MANAGER	DAVID R GRADY
DRAWN BY	DK LONG
PROJECT NUMBER	000000000192999

PRELIMINARY NOT FOR CONSTRUCTION OR RECORDING

U.S. BUREAU OF RECLAMATION

SEMINOE SITE 5C PUMPED STORAGE EVALUATION

VARIABLE SPEED UNITS POWERHOUSE GENERAL ARRANGEMENT LONGITUDINAL SECTION

FILENAME	SC–04.dgn
SCALE	AS NOTED

FIGURE
SC-04

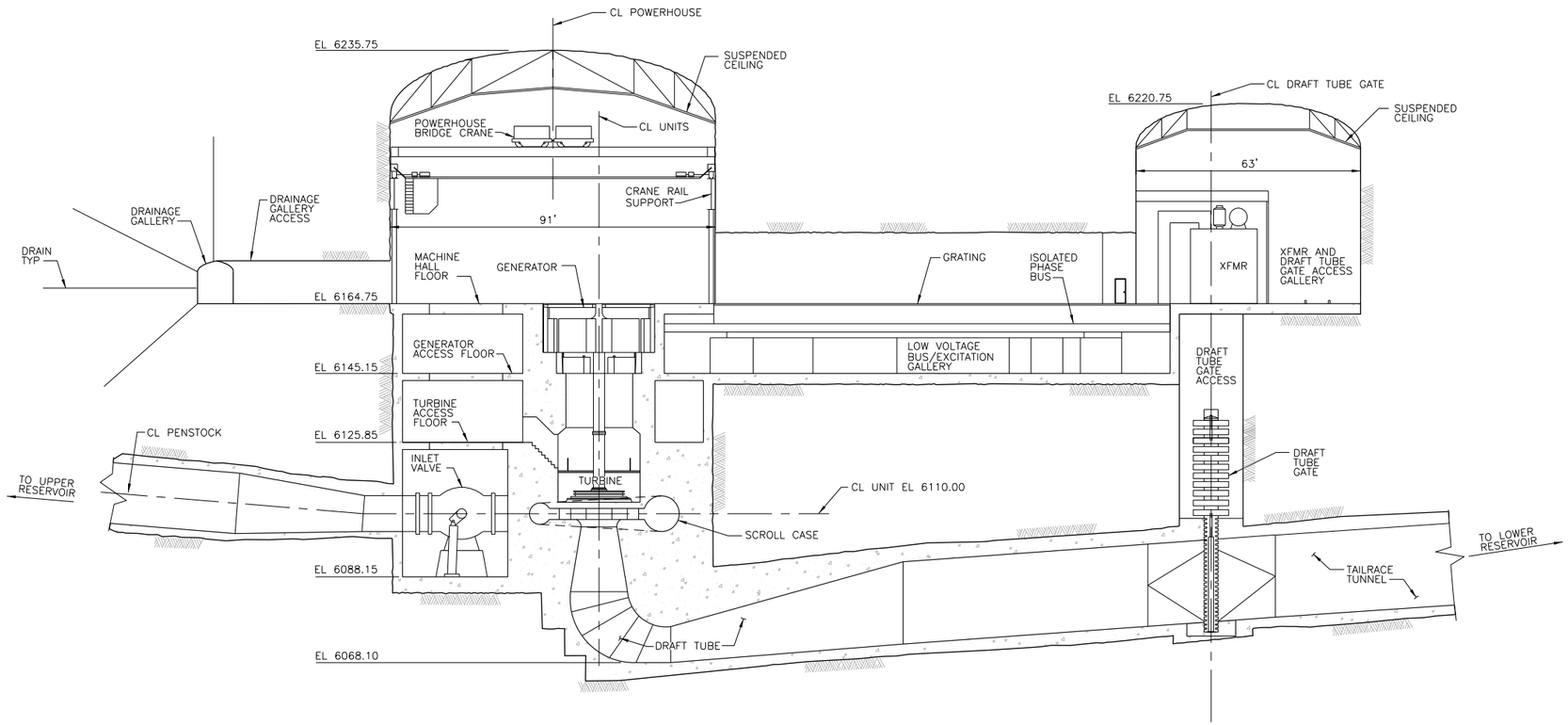

TRANSVERSE SECTION

SCALE: 1"= 20'

ISSUE	DATE	DESCRIPTION
–	–	–

PROJECT MANAGER	DAVID R GRADY
DRAWN BY	DK LONG
PROJECT NUMBER	000000000192999

HDR Engineering, Inc.

PRELIMINARY NOT FOR CONSTRUCTION OR RECORDING

U.S. BUREAU OF RECLAMATION

SEMINOE SITE 5C PUMPED STORAGE EVALUATION

VARIABLE SPEED UNITS POWERHOUSE GENERAL ARRANGEMENT TRANSVERSE SECTION

FILENAME	SC–05.dgn
SCALE	AS NOTED

FIGURE **SC-05**

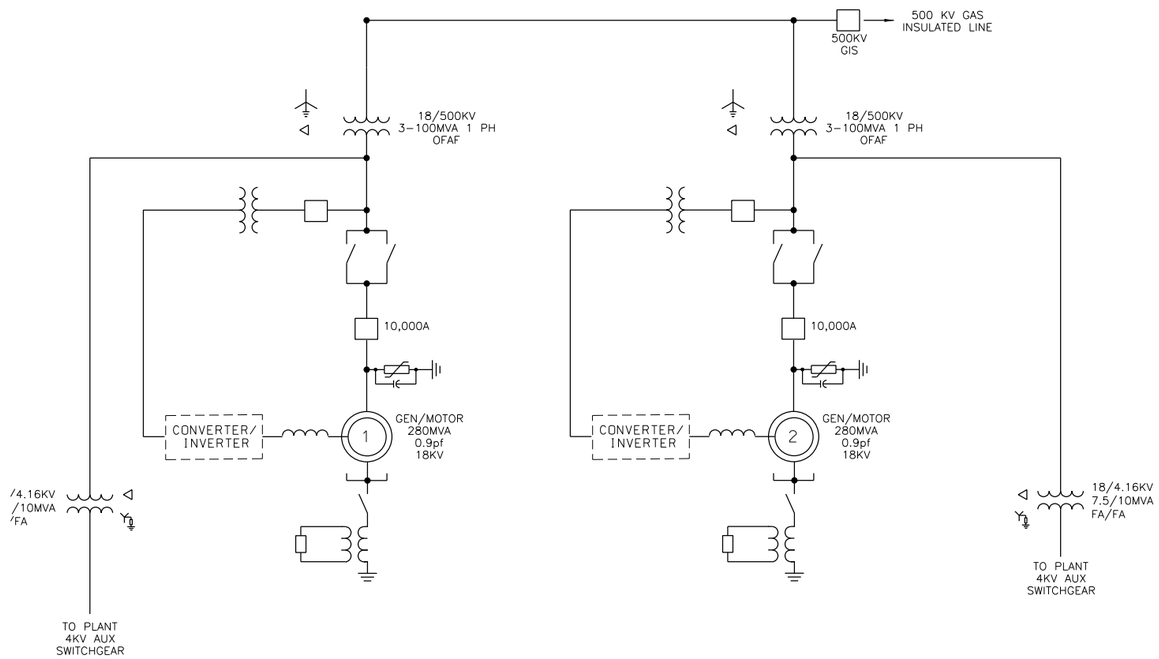

HDR Engineering, Inc.

ISSUE	DATE	DESCRIPTION
–	–	–

PROJECT MANAGER	DAVID R GRADY
DRAWN BY	DK LONG
PROJECT NUMBER	000000000192999

**PRELIMINARY
NOT FOR
CONSTRUCTION
OR
RECORDING**

U.S. BUREAU OF RECLAMATION

**SEMINOE SITE 5C
PUMPED STORAGE EVALUATION**

**VARIABLE SPEED UNITS
POWERHOUSE
ONE LINE DIAGRAM**

FILENAME	SC-06.dgn
SCALE	NONE

FIGURE
SC-06

Seminoe/Kortes area

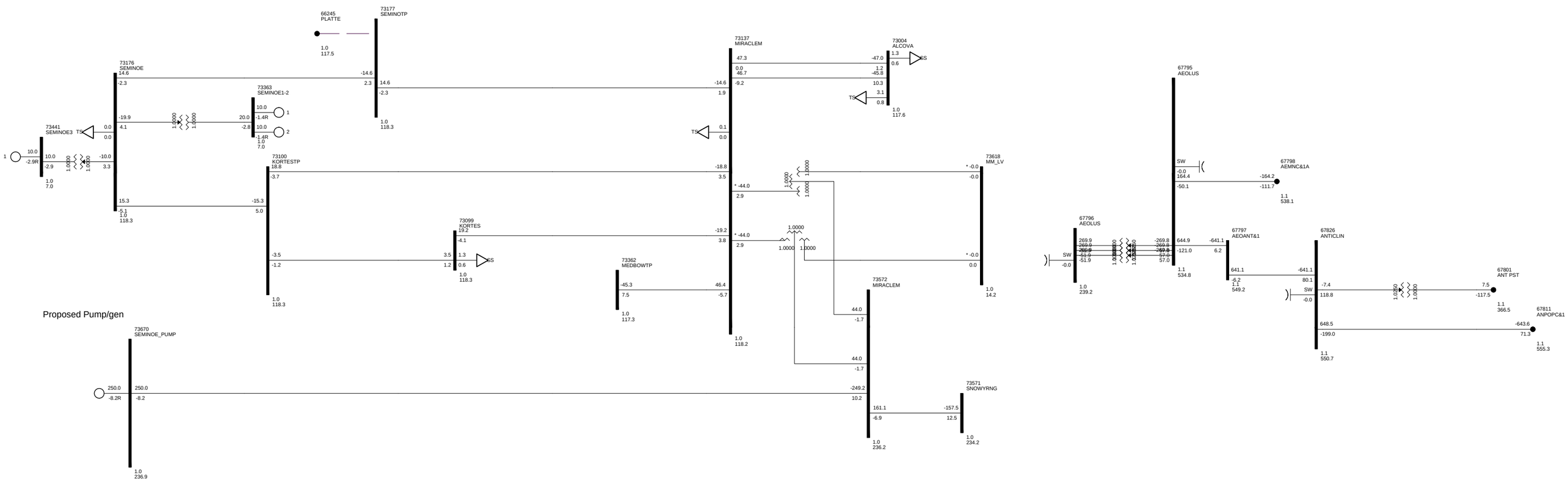

Proposed Pump/gen

Proposed Seminoe Pump / gen storage project -- generation at 250 MW

Seminoe/Kortes area

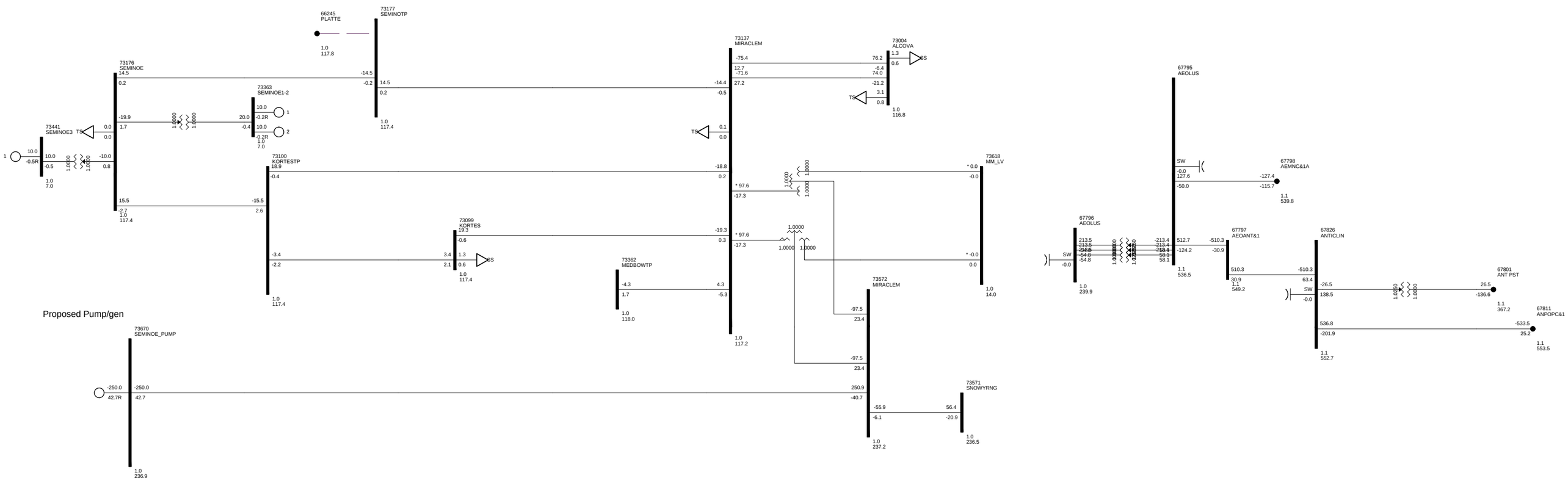

Proposed Seminoe Pump / gen storage project -- pump at 250 MW

Seminoe/Kortes area

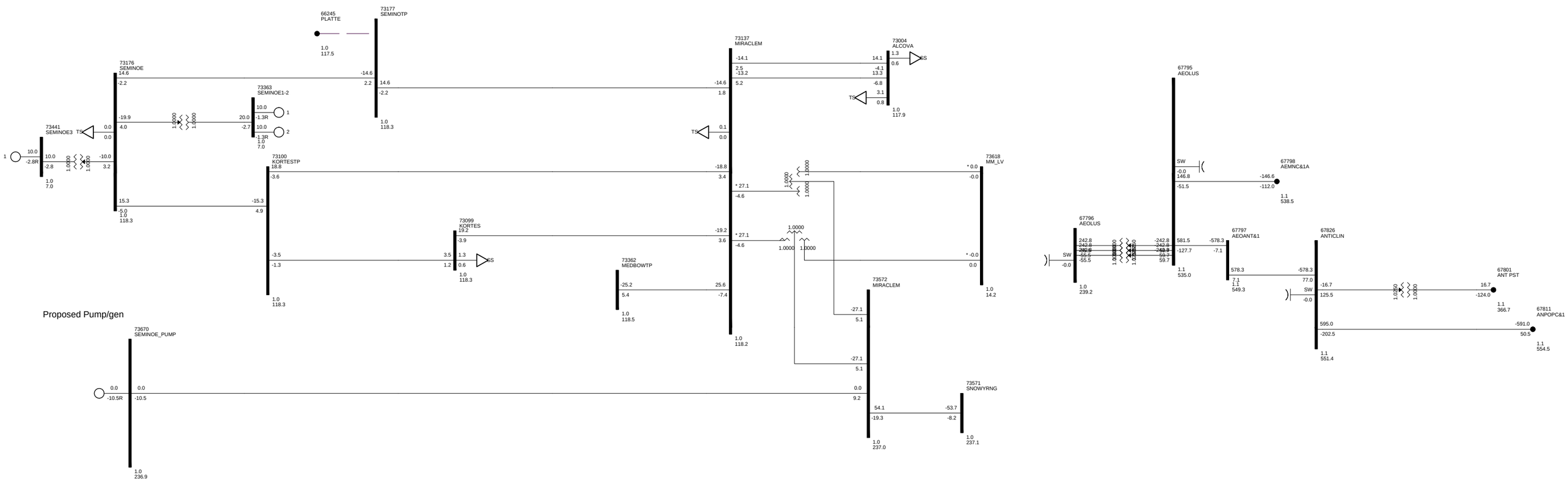

Proposed Pump/gen

Proposed Seminoe Pump / gen storage project -- reactive

Seminoe/Kortes area

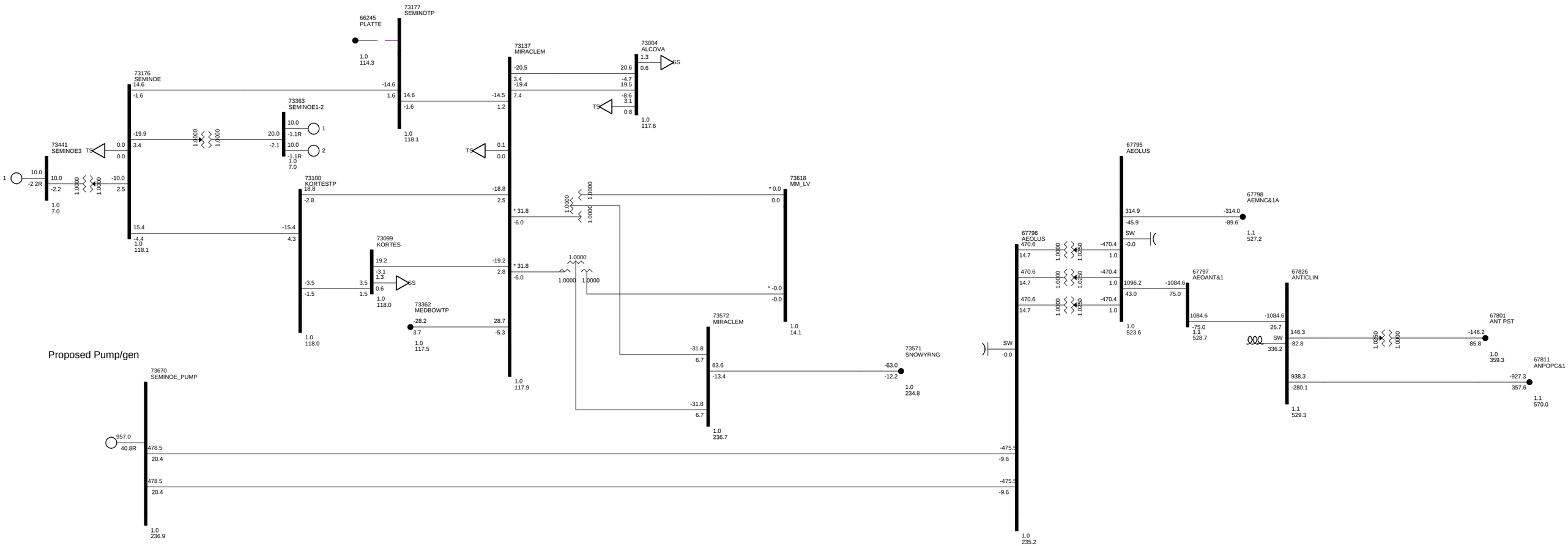

Proposed Seminoe Pump / gen storage project-- aeolus 230 kV connection -- GEN 957 MW

Seminoe/Kortes area

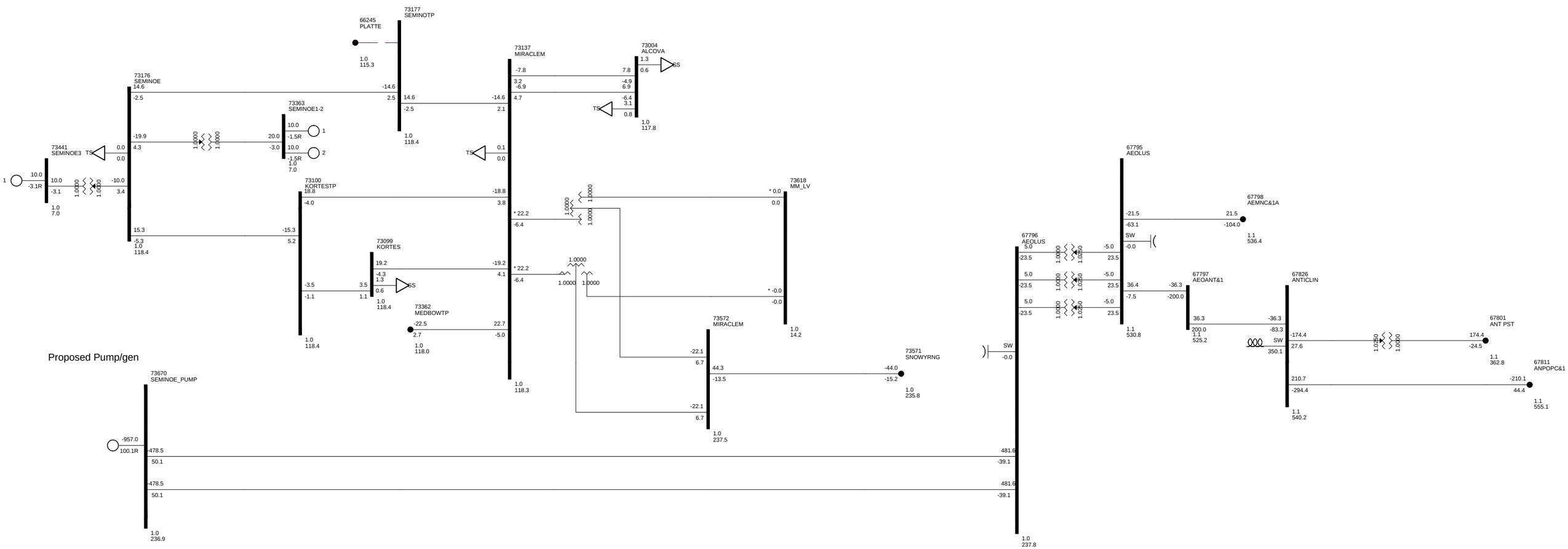

Proposed Seminoe Pump / gen storage project-- aeolus 230 kV connection -- PUMP 957 MW

Seminoe/Kortes area

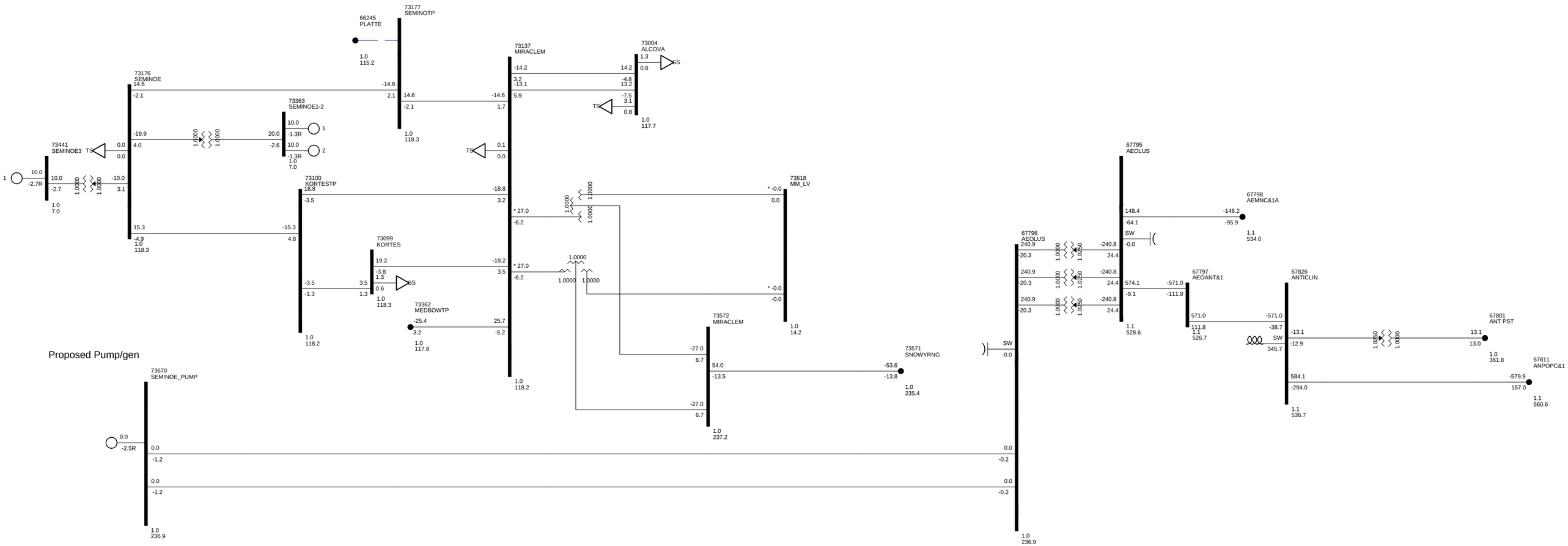

Proposed Seminoe Pump / gen storage project-- aeolus 230 kV connection -- REACTIVE

Seminoe/Kortes area

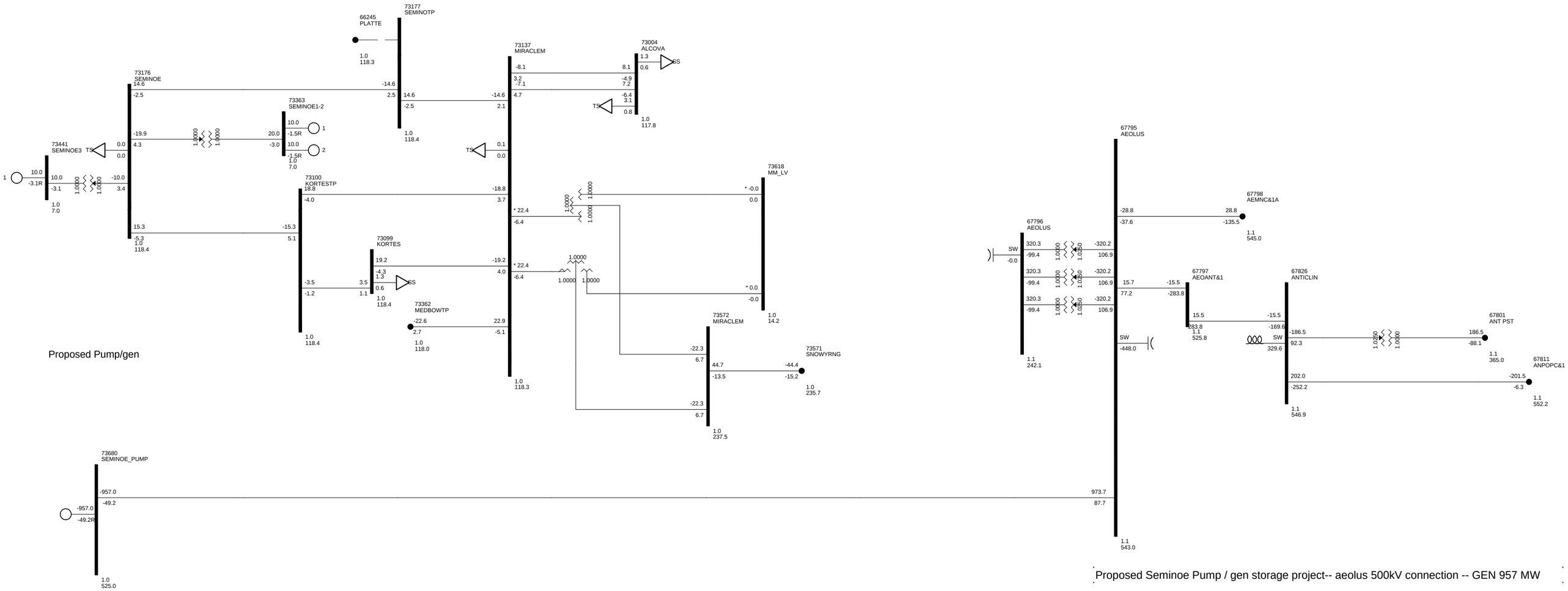

Proposed Pump/gen

Proposed Seminoe Pump / gen storage project-- aeolus 500kV connection -- GEN 957 MW

Seminoe/Kortes area

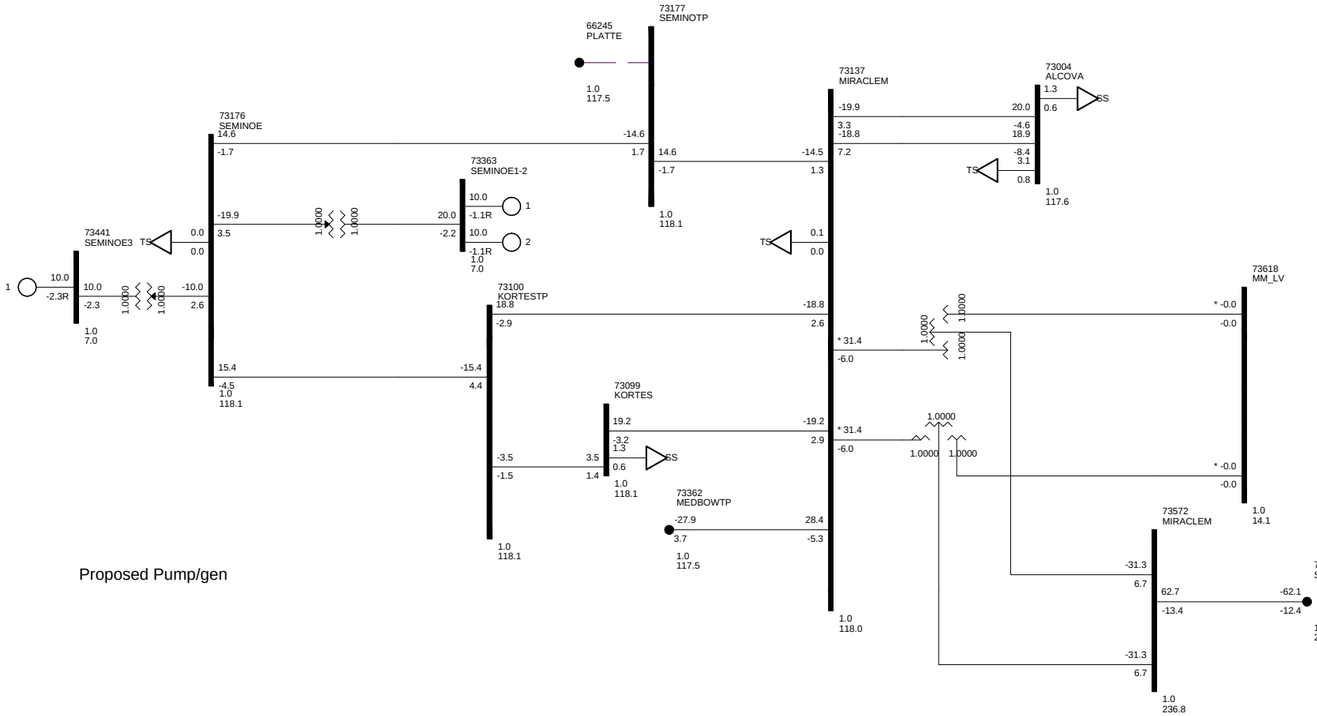

Proposed Pump/gen

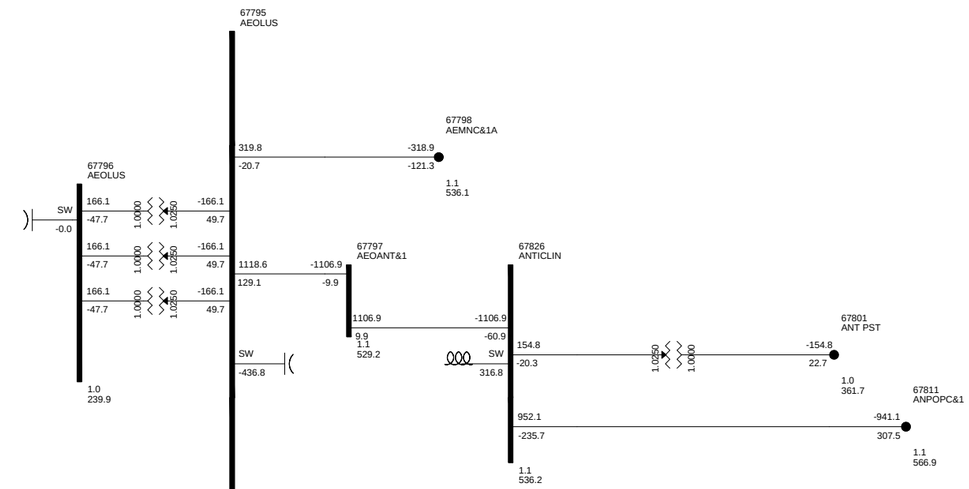

Proposed Seminoe Pump / gen storage project-- aeolus 500kV connection -- PUMP 957 MW

Seminoe/Kortes area

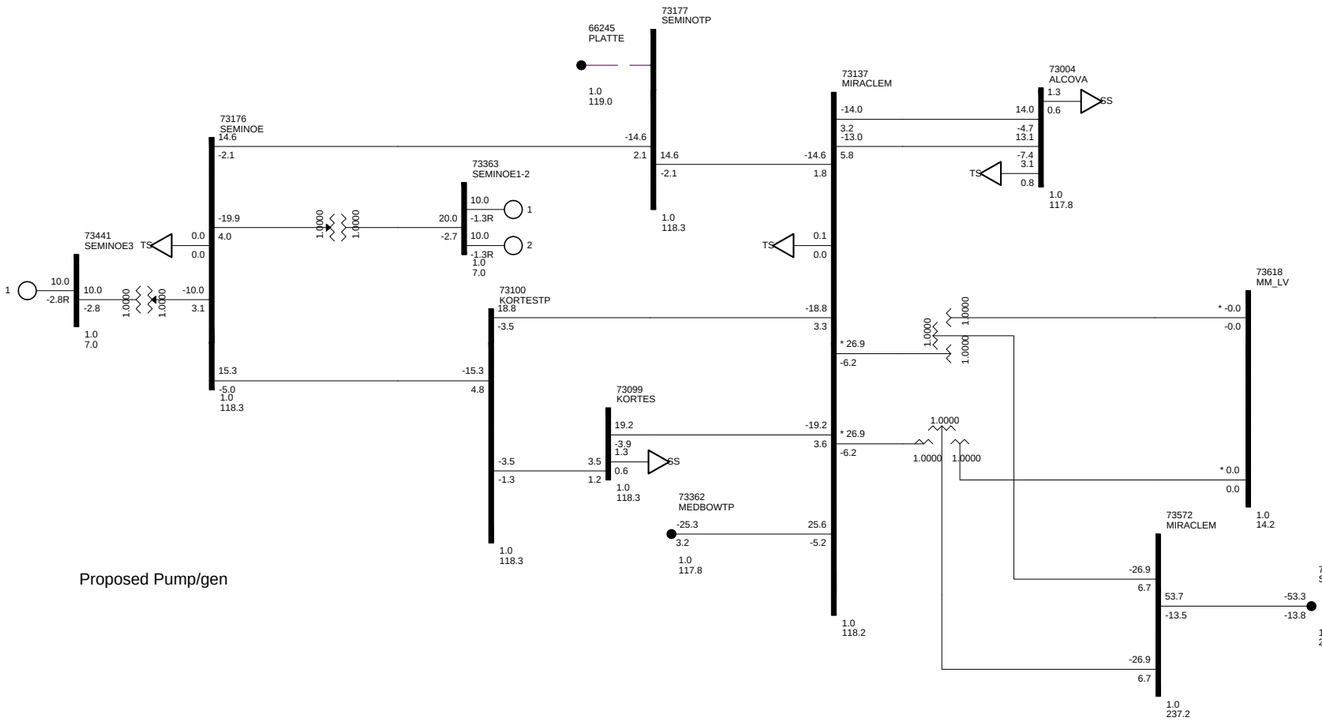

Proposed Pump/gen

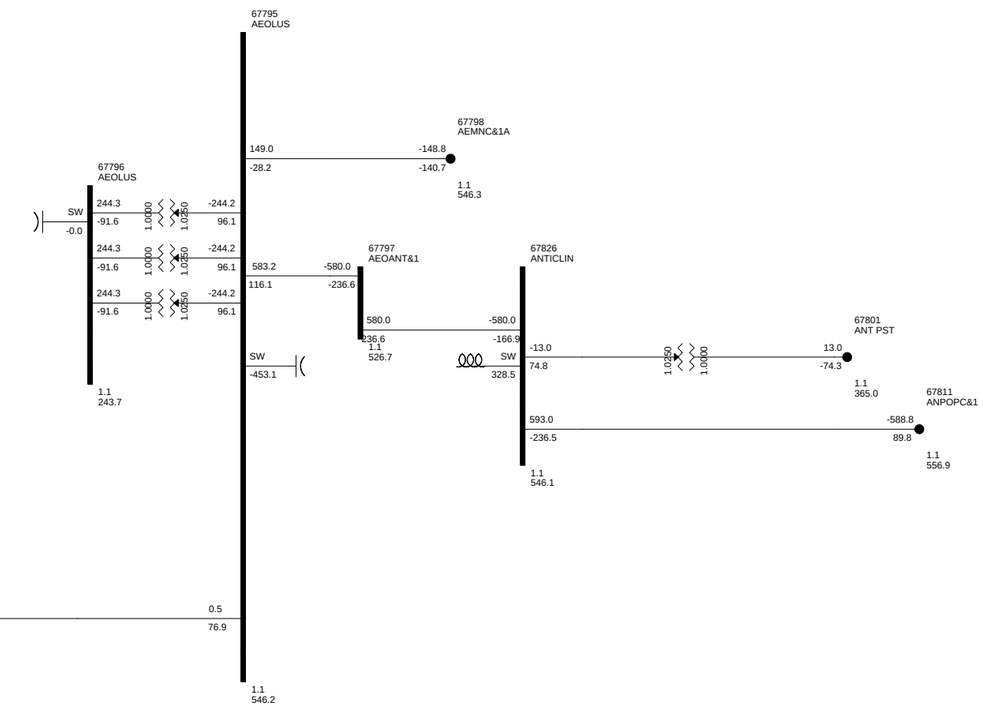

Proposed Seminoe Pump / gen storage project-- aeolus 500kV connection -- REACTIVE

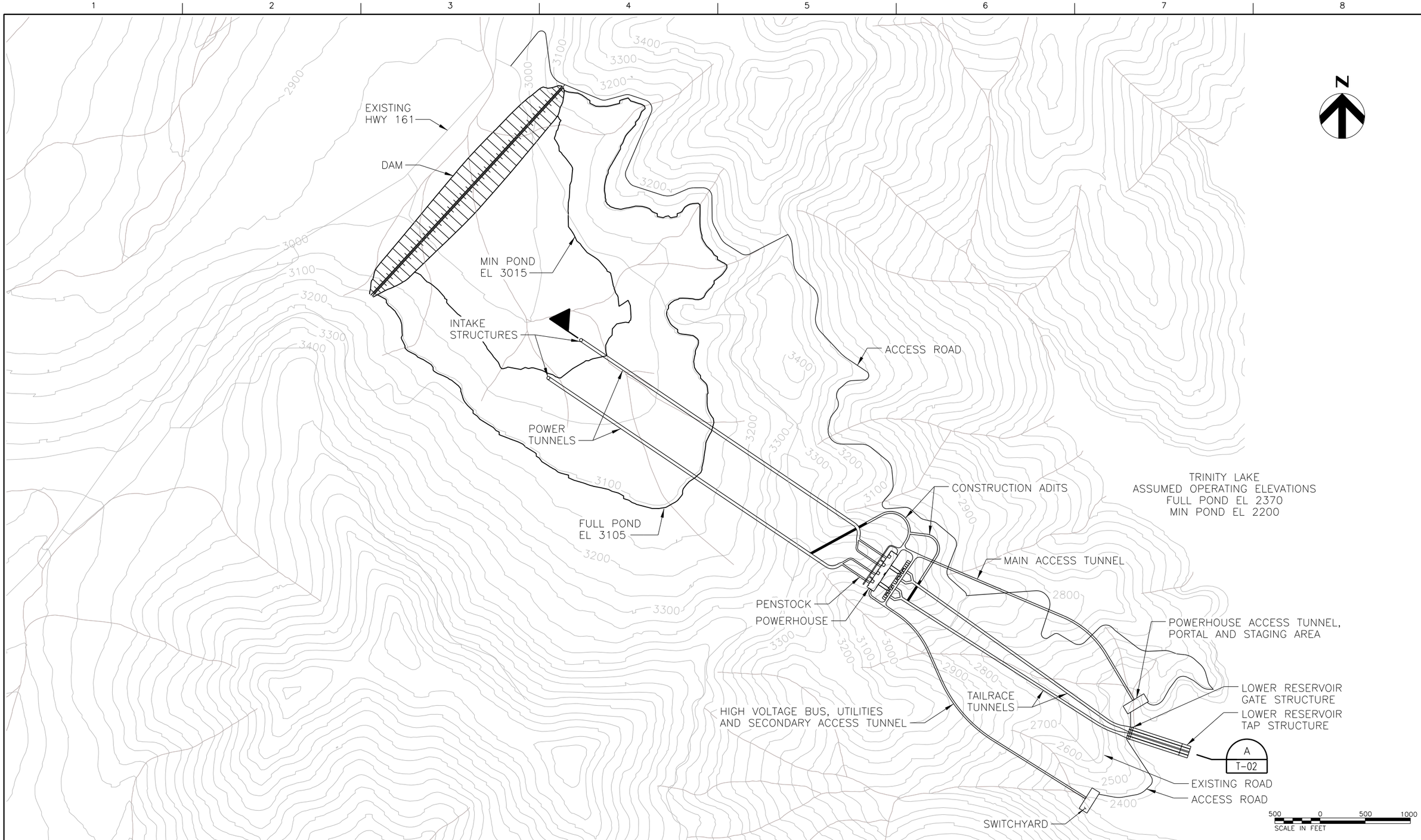

HDR

HDR Engineering, Inc.

ISSUE	DATE	DESCRIPTION
–	–	–

PROJECT MANAGER	DAVID R GRADY
DRAWN BY	RM MAKEE
PROJECT NUMBER	000000000192999

PRELIMINARY NOT FOR CONSTRUCTION OR RECORDING

U.S. BUREAU OF RECLAMATION

TRINITY SITE 5G2A PUMPED STORAGE EVALUATION

SITE PLAN

FILENAME	T-01.dgn
SCALE	1"= 500'

FIGURE **T-01**

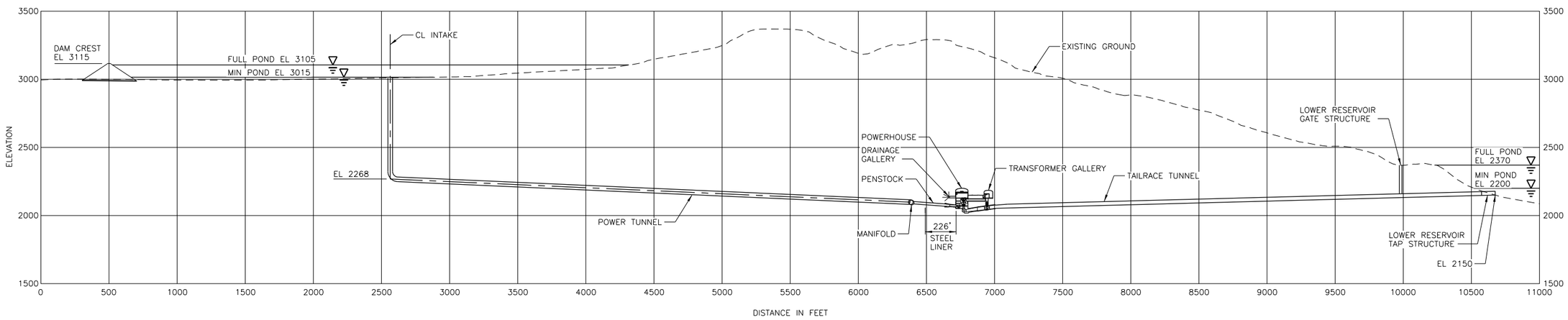

PROFILE
SCALE: 1"= 400'
A T-01

400 0 400 800
SCALE IN FEET

HDR
HDR Engineering, Inc.

ISSUE	DATE	DESCRIPTION
–	–	–

PROJECT MANAGER	DAVID R GRADY
DRAWN BY	RM MAKEE
PROJECT NUMBER	000000000192999

PRELIMINARY NOT FOR CONSTRUCTION OR RECORDING

U.S. BUREAU OF RECLAMATION

TRINITY SITE 5G2A PUMPED STORAGE EVALUATION

PROFILE

FILENAME	T-02.dgn
SCALE	AS NOTED

FIGURE
T-02

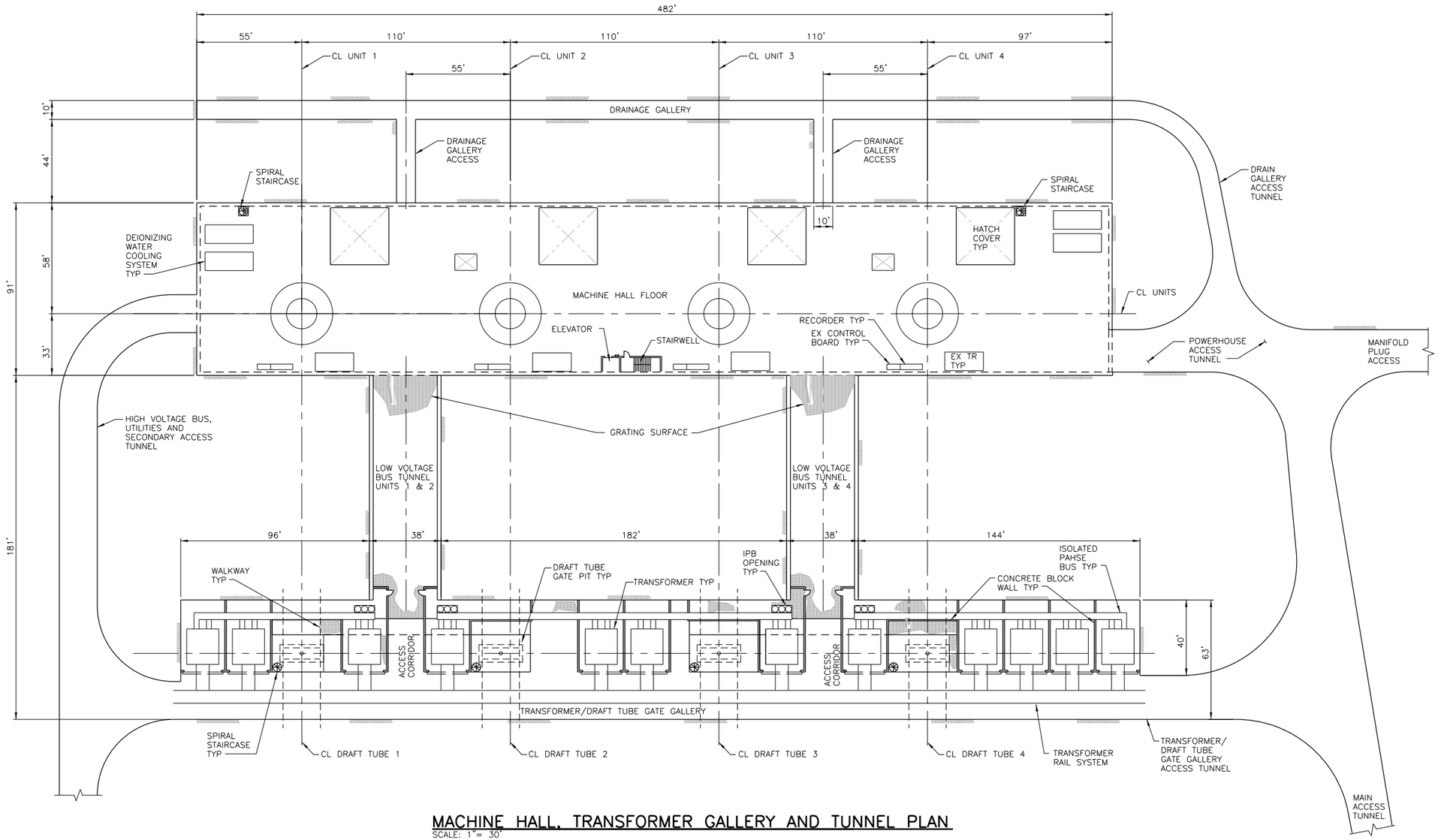

MACHINE HALL, TRANSFORMER GALLERY AND TUNNEL PLAN

SCALE: 1"= 30'

HDR Engineering, Inc.

ISSUE	DATE	DESCRIPTION
–	–	–

PROJECT MANAGER	DAVID R GRADY
DRAWN BY	DK LONG
PROJECT NUMBER	000000000192999

PRELIMINARY NOT FOR CONSTRUCTION OR RECORDING

U.S. BUREAU OF RECLAMATION

TRINITY SITE 5G2A PUMPED STORAGE EVALUATION

VARIABLE SPEED UNITS POWERHOUSE GENERAL ARRANGEMENT PLAN

FILENAME	T-03.dgn
SCALE	AS NOTED

FIGURE **T-03**

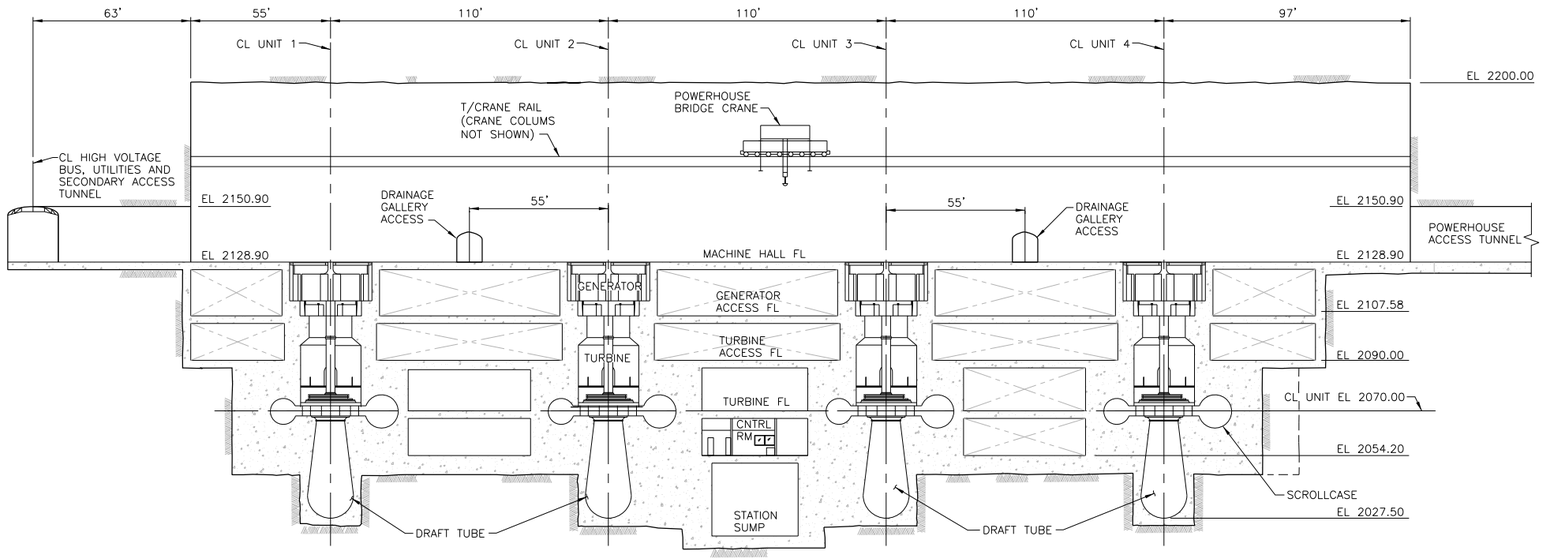

LONGITUDINAL SECTION

SCALE: 1"= 30'

HDR Engineering, Inc.

ISSUE	DATE	DESCRIPTION
–	–	–

PROJECT MANAGER	DAVID R GRADY
DRAWN BY	DK LONG
PROJECT NUMBER	000000000192999

PRELIMINARY NOT FOR CONSTRUCTION OR RECORDING

U.S. BUREAU OF RECLAMATION

TRINITY SITE 5G2A PUMPED STORAGE EVALUATION

VARIABLE SPEED UNITS POWERHOUSE GENERAL ARRANGEMENT LONGITUDINAL SECTION

FILENAME	T-04.dgn
SCALE	AS NOTED

FIGURE **T-04**

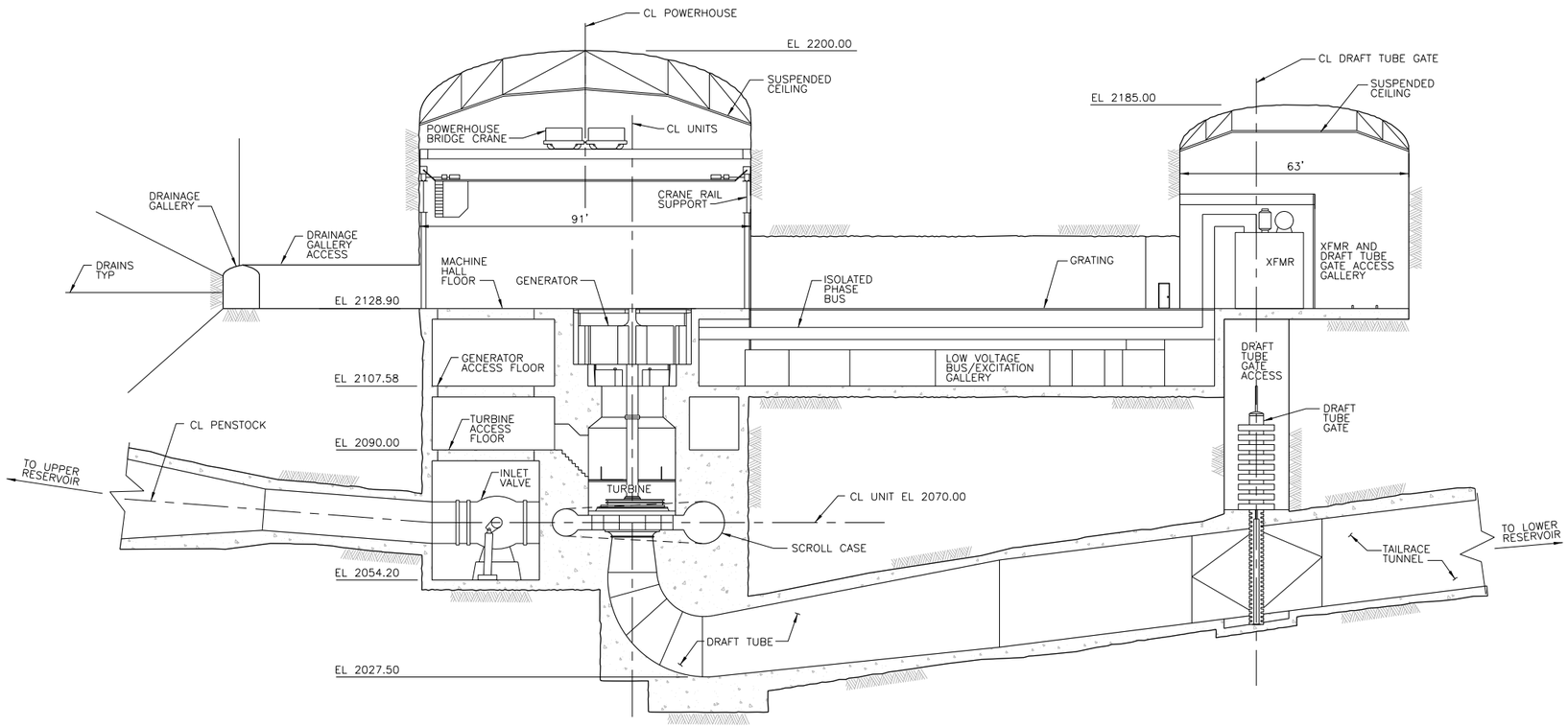

TRANSVERSE SECTION

SCALE: 1"= 20'

ISSUE	DATE	DESCRIPTION
–	–	–

PROJECT MANAGER	DAVID R GRADY
DRAWN BY	DK LONG
PROJECT NUMBER	000000000192999

HDR Engineering, Inc.

PRELIMINARY NOT FOR CONSTRUCTION OR RECORDING

U.S. BUREAU OF RECLAMATION

TRINITY SITE 5G2A PUMPED STORAGE EVALUATION

VARIABLE SPEED UNITS POWERHOUSE GENERAL ARRANGEMENT TRANSVERSE SECTION

FILENAME	T-05.dgn
SCALE	AS NOTED

FIGURE **T-05**

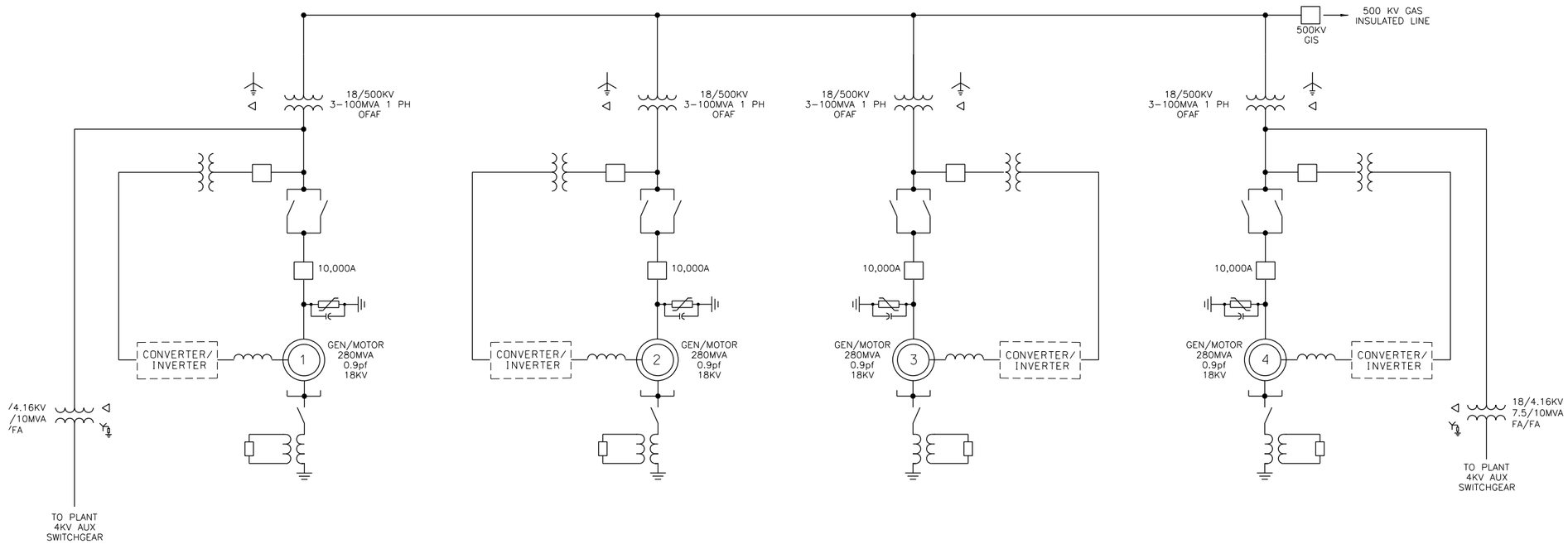

HDR Engineering, Inc.

ISSUE	DATE	DESCRIPTION
–	–	–

PROJECT MANAGER	DAVID R GRADY
DRAWN BY	DK LONG
PROJECT NUMBER	000000000192999

PRELIMINARY NOT FOR CONSTRUCTION OR RECORDING

U.S. BUREAU OF RECLAMATION

TRINITY SITE 5G2A PUMPED STORAGE EVALUATION

VARIABLE SPEED UNITS POWERHOUSE ONE LINE DIAGRAM

FILENAME	T-06.dgn
SCALE	AS NOTED

FIGURE **T-06**

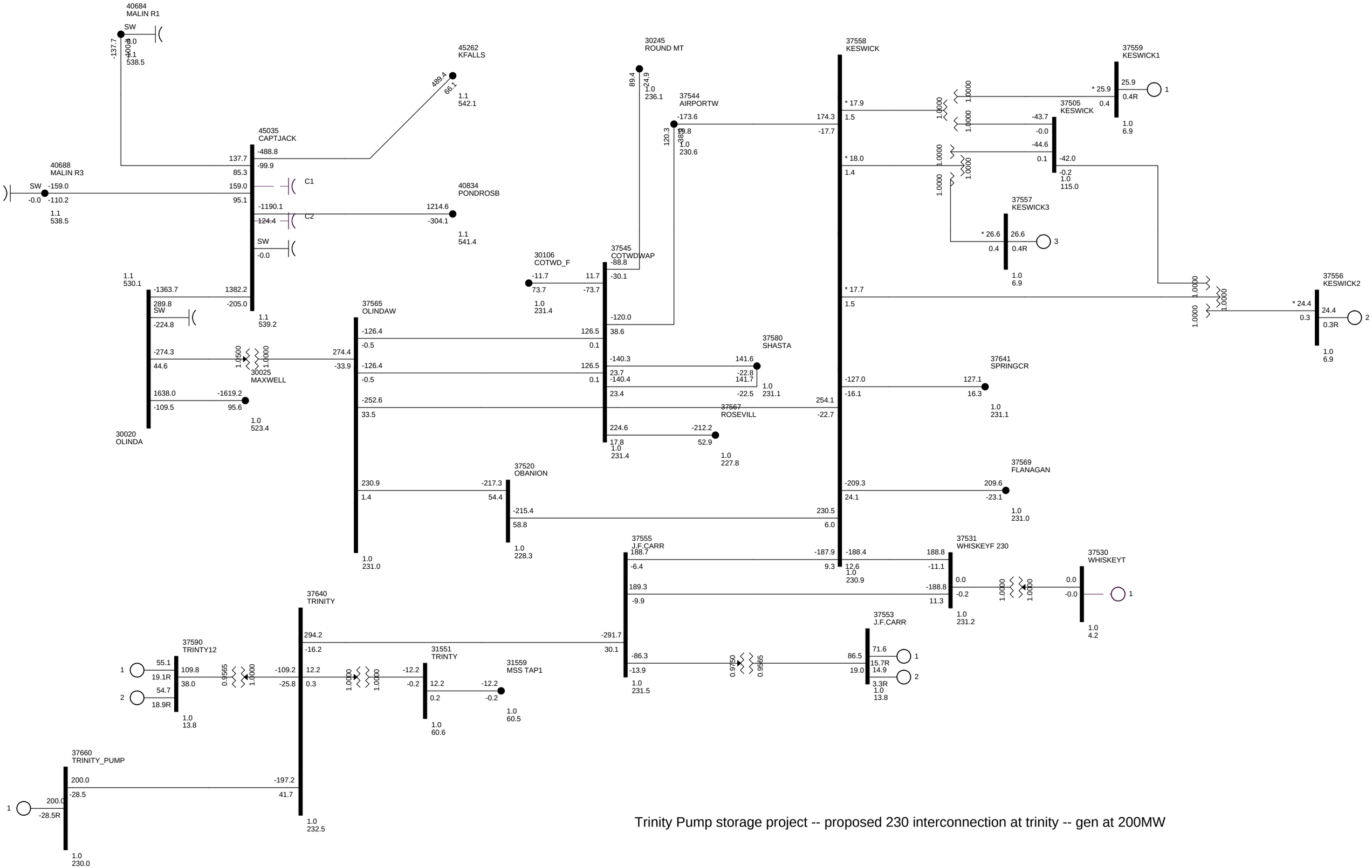

Trinity Pump storage project -- proposed 230 interconnection at trinity -- gen at 200MW

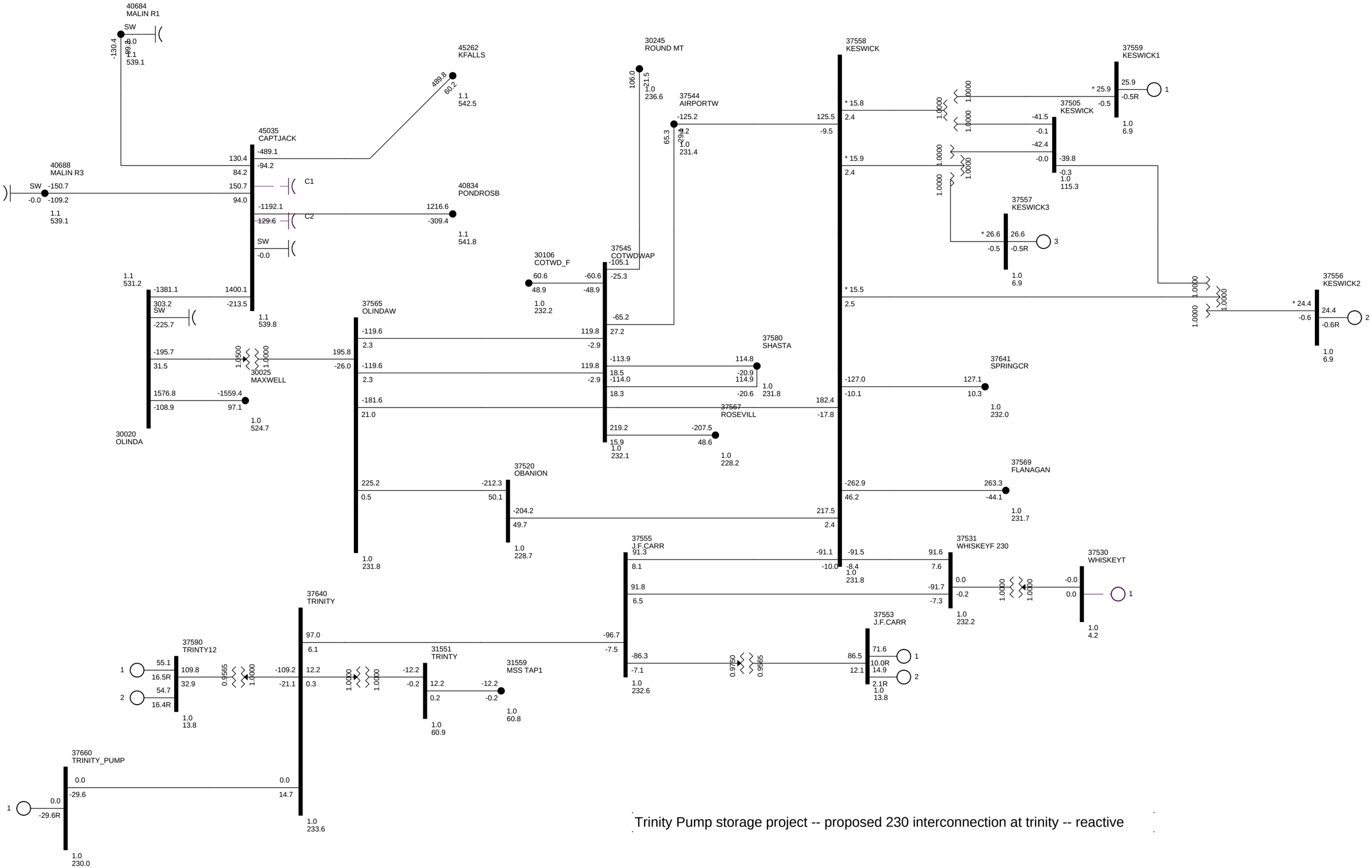

Trinity Pump storage project -- proposed 230 interconnection at trinity -- reactive

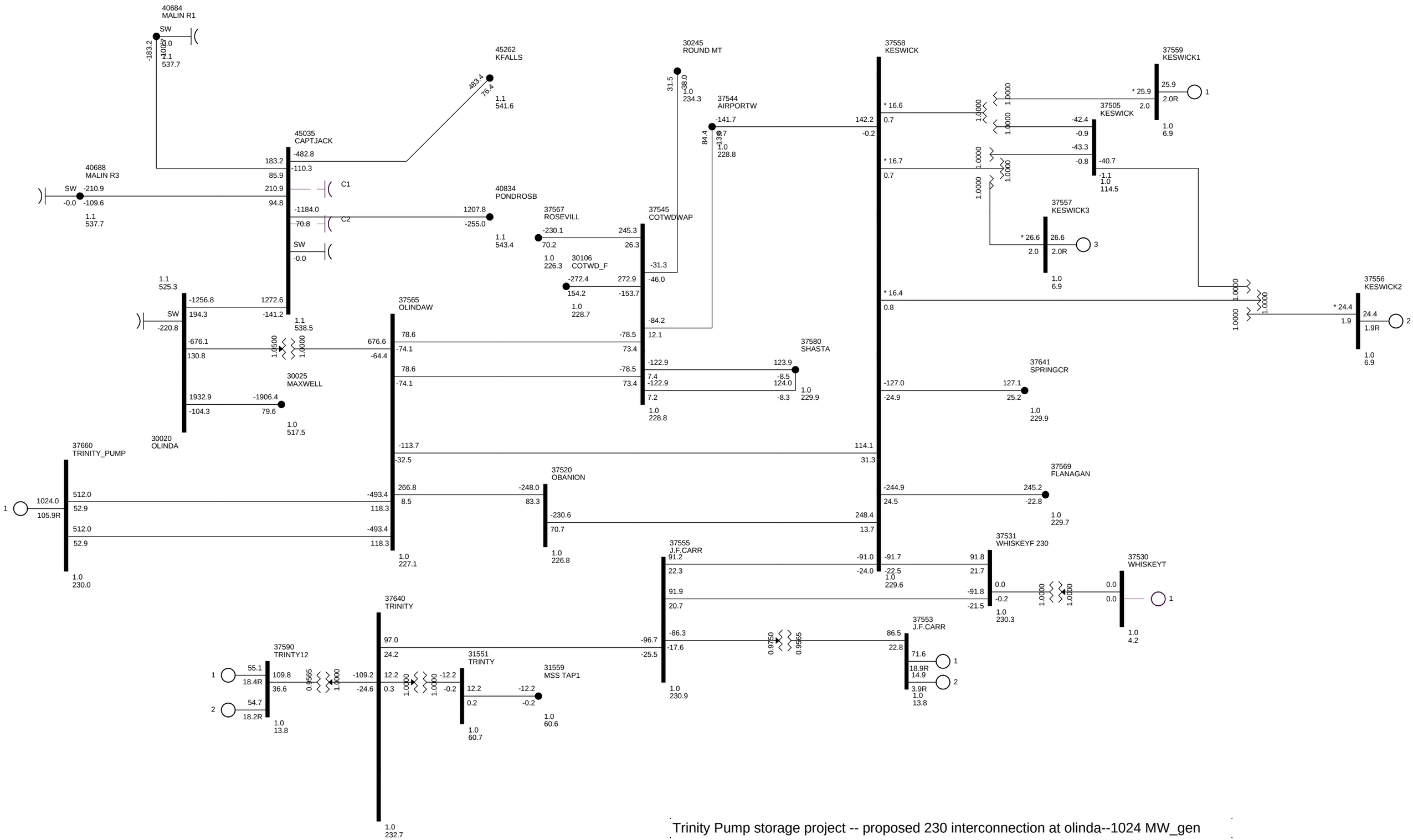

Trinity Pump storage project -- proposed 230 interconnection at olinda--1024 MW_gen

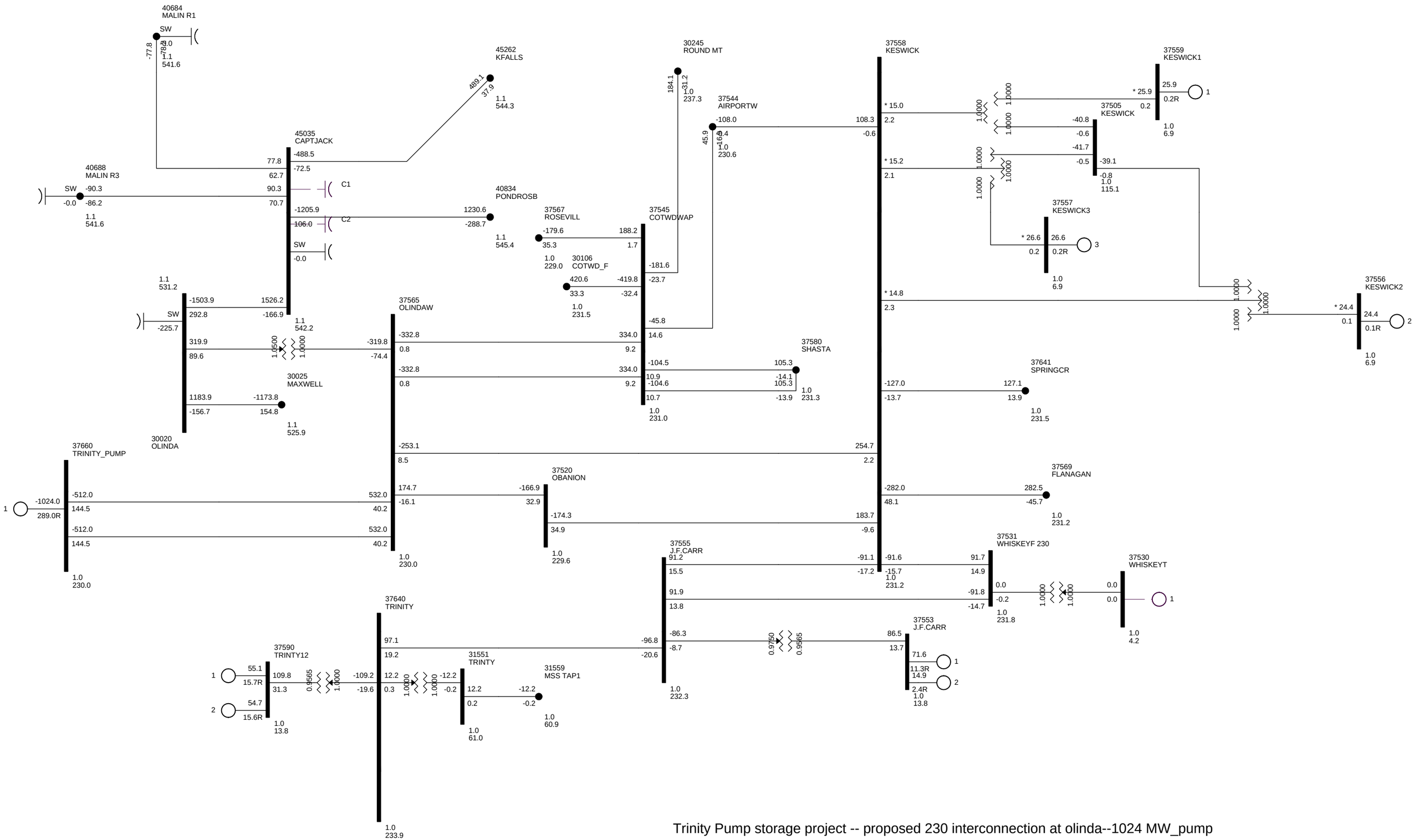

Trinity Pump storage project -- proposed 230 interconnection at olinda--1024 MW_pump

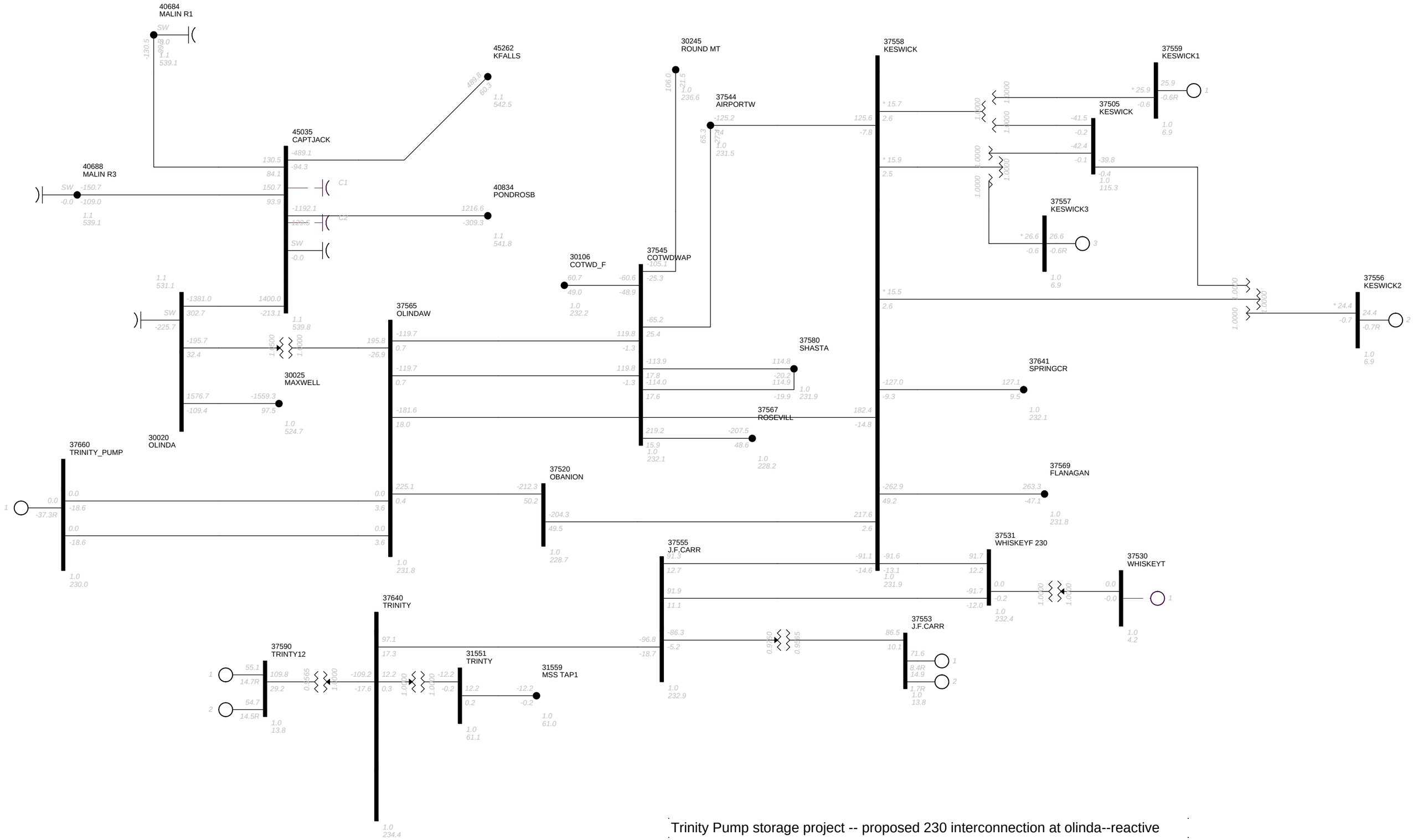

Trinity Pump storage project -- proposed 230 interconnection at olinda--reactive

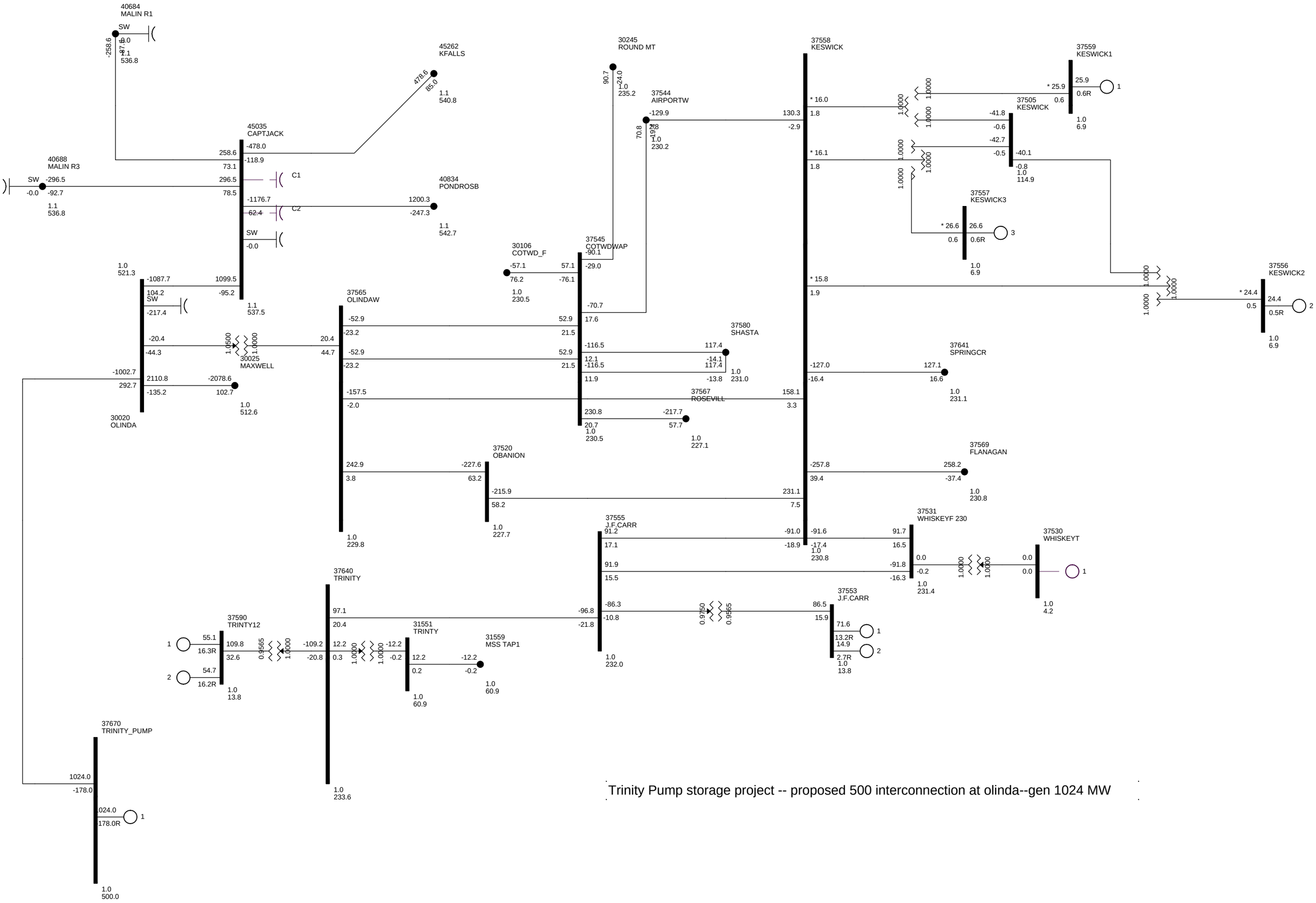

Trinity Pump storage project -- proposed 500 interconnection at olinda--gen 1024 MW

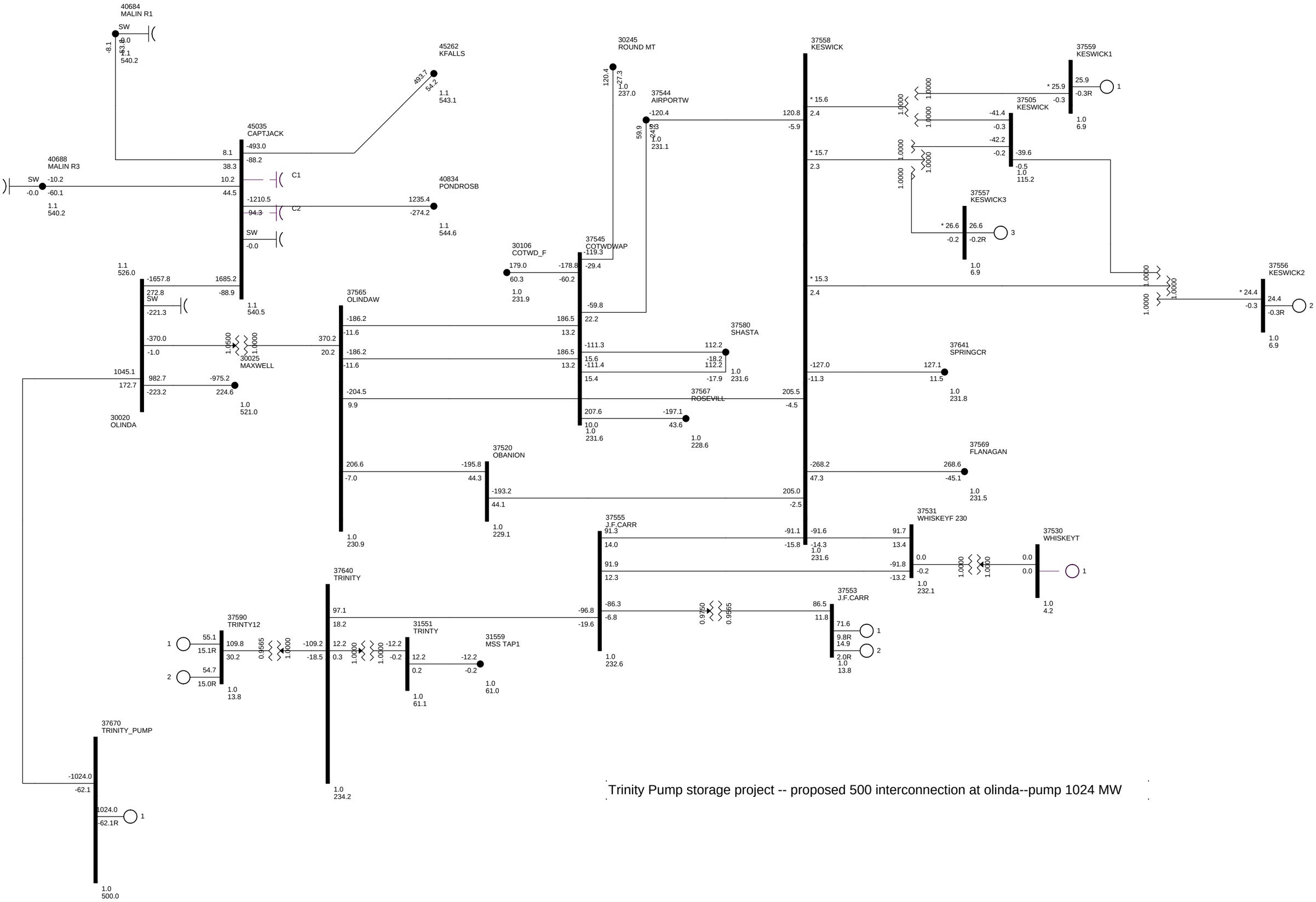

Trinity Pump storage project -- proposed 500 interconnection at olinda--pump 1024 MW

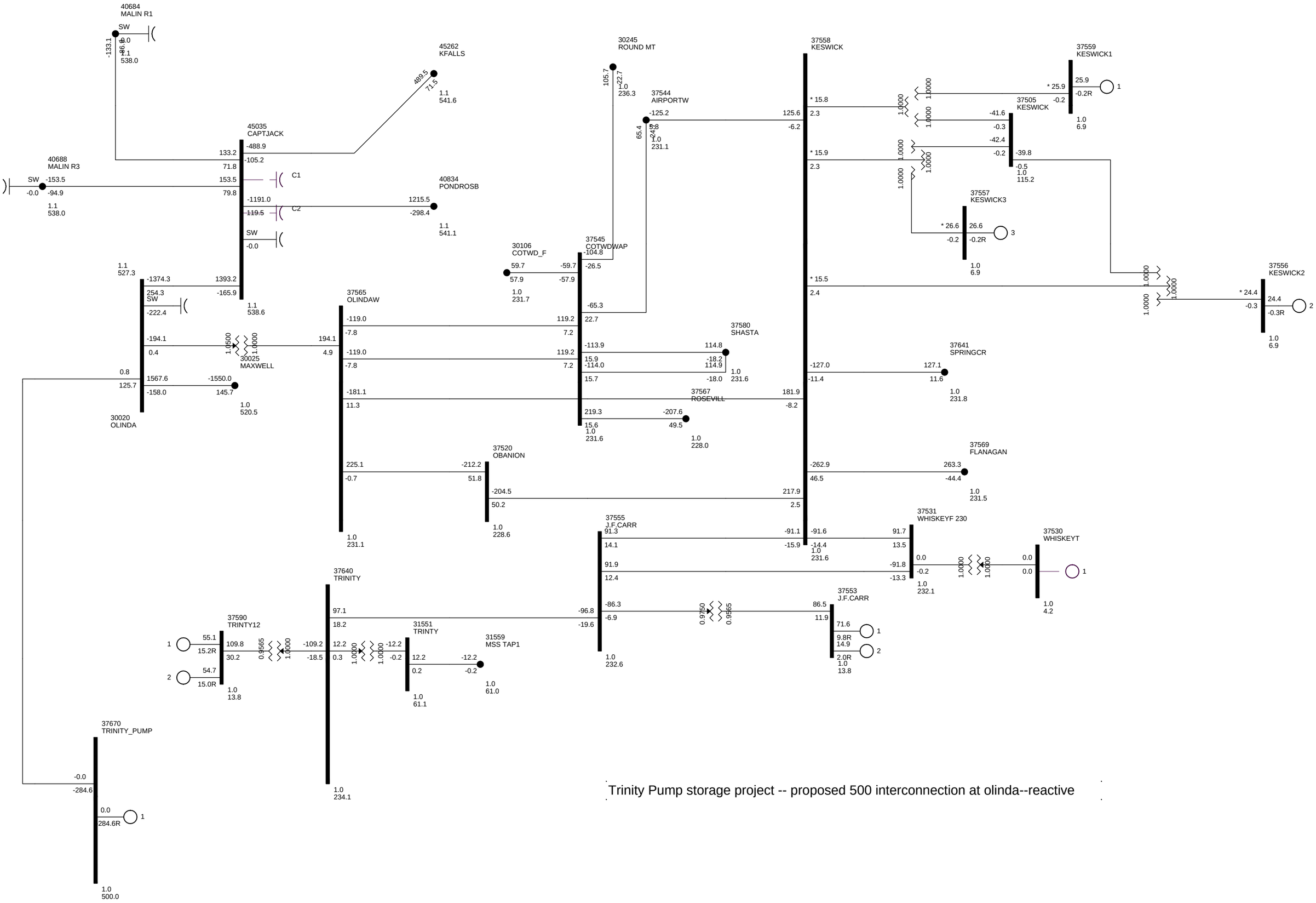

Trinity Pump storage project -- proposed 500 interconnection at olinda--reactive