BIOLOGICAL ASSESSMENT
LITTLE CREEK DIVERSION NO. 1
FISH PASSAGE PROJECT

PREPARED FOR:

U.S. Department of Interior
Bureau of Reclamation
1150 North Curtis Road, Suite 100
Boise, ID 83706-1234
Contact: Jeff McLaughlin
PHONE: 208/378-5251

PREPARED BY:

ICF International
1108 11th Street, Suite 301
Bellingham, WA 98225
Contact: Chris Soncarty
360/483-8956

April 2011

ICF INTERNATIONAL

ICF International. 2011. Biological Assessment Little Creek Diversion No. 1 Fish Passage Project. April. (ICF 00770.10) Bellingham, WA. Prepared for the Bureau of Reclamation.

Contents

List of Tables and Figures iii

Page

Chapter 1 **Introduction** **1-1**
Project Background 1-1
Project Location 1-1
Chapter 2 **Project Description** **2-1**
Overview of Construction Schedule 2-1
Construction Sequencing 2-1
Project Components 2-1
Avoidance and Minimization Measures 2-4
Chapter 3 **Project Action Area** **3-1**
Chapter 4 **Species Occurrence** **4-1**
Chinook Salmon of the Snake River Spring/Summer-run Evolutionarily Significant Unit 4-2
Critical Habitat 4-2
Steelhead of the Snake River Basin Distinct Population Segment 4-3
Critical Habitat 4-3
Bull Trout of the Columbia River Distinct Population Segment 4-3
Critical Habitat 4-3
Howell's Spectacular Thelypody (*Thelypodium howellii* ssp. *specatbilis*) 4-3
Critical Habitat 4-4
Chapter 5 **Environmental Baseline** **5-1**
Salmonid Habitat Conditions 5-1
Chapter 6 **Effects Analysis** **6-1**
Direct Effect 6-1
Water Quality and Quantity 6-1
Vegetation and Habitat Modification 6-3
Fish Exclusion and Removal 6-3
Channel Dewatering 6-4
Fish Passage 6-5
Impacts on Designated Critical Habitat for Chinook Salmon of the Snake River Spring/Summer-run ESU 6-5
Impacts on Designated Critical Habitat for Steelhead of the Snake River Basin DPS 6-5

Impacts on Designated Critical Habitat for Bull Trout of the Columbia River DPS 6-7
Indirect Effects 6-7
Effects of Interrelated and Interdependent Actions 6-8
Chapter 7 **Effect Determinations 7-1**
Chinook Salmon of the Snake River Spring/Summer-run ESU 7-1
Critical Habitat 7-1
Steelhead of the Snake River Basin DPS 7-2
Critical Habitat 7-2
Bull Trout of the Coastal/Puget Sound DPS 7-3
Critical Habitat 7-3
Howell's Spectacular Thelypody 7-3
Critical Habitat 7-4
Chapter 8 **References 8-1**

Appendix A Project Design Plan Sheets
Appendix B Species Lists from the USFWS and the NMFS
Appendix C Species Descriptions
Appendix D Essential Fish Habitat Assessment

Tables and Figures

Table **Page**

Table 4-1. Federally Protected Species Identified as Occurring in Union County, Oregon 4-2

Table 5-1. Overview of the Environmental Baseline Conditions in Catherine Creek 5-3

Table 5-2. Overview of the Environmental Baseline Conditions in Catherine Creek Specific to Bull Trout 5-3

Figure **Follows Page**

Figure 1. Project Vicinity and Action Area 1-1

Chapter 1
Introduction

Project Background

The project is located in the Grande Ronde subbasin on Little Creek near the City of Union, in Union County OR (Figure 1). The Little Creek Diversion No. 1 consists of a concrete structure about 20 feet wide with flash boards to provide sufficient backwater during diversion operations. The structure provides about two feet of water depth without the flash boards in place, and about four feet of water depth with the flash boards in place. Appendix A provides Project Design Plan Sheets that detail the various elements of the project.

The property owner currently diverts water on both side of the stream, upstream of the diversion structure. Water diversions are estimated at approximately two cubic feet per second (cfs) on both sides of the structure.

Project Location

The Little Creek Diversion No. 1 is located at approximately river mile (RM) 0.81 on Little Creek. The project site is approximately 1.5-miles east of the City of Union, Union County, OR. The legal description of the project is Township 04 South, Range 39 East, Section 11, W.M.

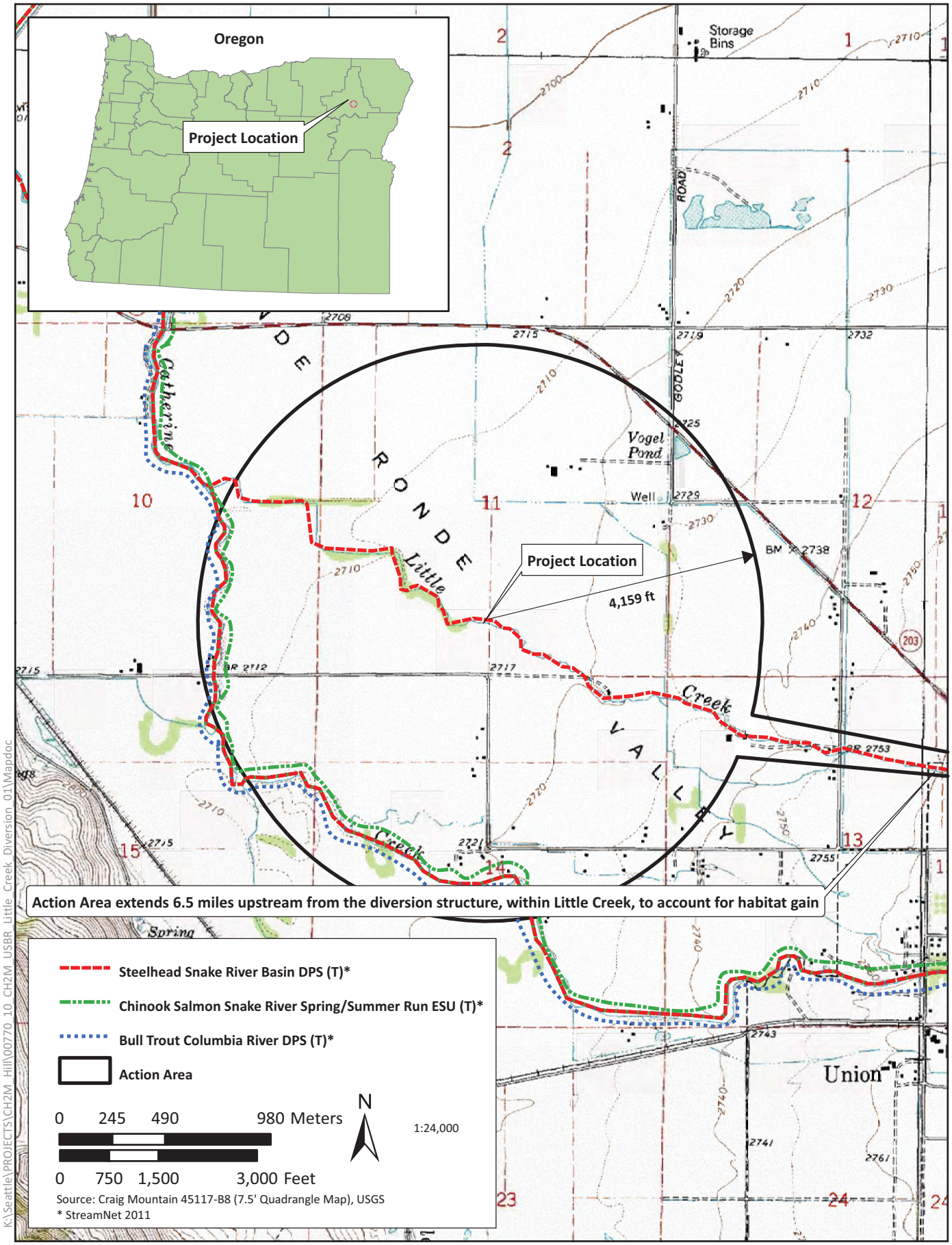

Figure 1
Project Vicinity and Action Area
Little Creek Diversion No. 1

Chapter 2
Project Description

Overview of Construction Schedule

The discussion below provides an overview of the project construction elements, including: construction sequencing and avoidance and minimization measures to be employed as part of the project.

Construction Sequencing

Project construction will entail the following elements:

- Mobilization of construction equipment and materials
- Staging of construction equipment and materials
- Fish removal and exclusion and isolation of the in-water construction area
- Removal of the existing diversion structure
- Construction of the new diversion and fish passage structure
- Stream Channel Grading
- Water Gap Improvements
- Demobilization of the construction equipment and remaining materials

The Oregon Guidelines for timing of in-water work to protect fish and wildlife resources for Little Creek is July 1 – October 15, according to the Oregon Department of Fish & Wildlife (ODFW)

Project Components

Mobilization of Construction Equipment and Materials

The project will require the use of heavy equipment such as a backhoe or track hoe, bull dozer, dump truck, concrete truck and pick-up trucks. Construction materials will include the following:

- Concrete: f'c – 4,000 psi
- Steel: ASTM A36 min, Fy min=36ksi
- Stainless Steel: ASTM A276, AISI Type 304L
- Aluminum Plates and Angles: B208 and B308/B308M, Alloy 6061-T6
- Aluminum Tubes: B221, Alloy 6061-T6
- Metals embedded in concrete shall be stainless steel Type 304L

- Submerged metals and metals less than one foot above high water line shall be aluminum or galvanized steel
- Metals one foot or more above high water line shall be galvanized steel
- Soil Bearing Pressure: 1,500 psf assumed
- Flashboards and Stoplogs: 3x nominal redwood

Some equipment will be required to operate below the ordinary high water line (OHWL), within the active channel. However, cofferdams and bypass pipes will be employed to dewater the project site and allow construction activities to occur in the dry.

Staging of Construction Equipment and Materials

Construction staging areas will be restricted to existing access roads located south of the stream channel, to avoid potential impacts to sensitive habitat such as surface waters and wetlands.

Fish Removal and Exclusion and Isolation of the In-Water Construction Area

Prior to removal of the existing diversion structure and construction of the new diversion structure, the work area will be isolated and fish removal and exclusion efforts will be initiated. To isolate the work area, block-nets will be placed upstream of the existing diversion structure. A beach seine will then be deployed from the upstream most block-net downstream a sufficient distance to allow removal of the existing diversion structure and construction of the new diversion structure and fish ladder. A second block-net will then be deployed at the downstream extent of the work area. The beach seine will be employed within the isolated work area to capture any fish that were not displaced from the work area during the first downstream sweep with the beach seine. The beach seine will continue to be used until no fish are captured. When fish are no longer captured, a cofferdam and stream bypass system will be installed at the upstream and downstream end and dewatering of the work area will begin with the use of either a gravity system or pumps. The bypass system will be screened appropriately. A fish biologist will be onsite during dewatering to observe the dewatering of the work area and to capture and remove any fish that may remain within the isolated work area. Once the isolated work area is dewatered and only isolated pools are present and no more fish are observed within the work area, a backpack electrofishing unit will be used to ensure no more fish are located within the work area.

This same fish removal and exclusion protocols and isolation of the in-water construction area process will be employed for in-water activities associated with the improvements to the water gap (e.g. removal of existing rock and installation of new rock material). The removal of the existing diversion structure, installation of the new diversion structure, and improvements to the water gap are described below.

Removal of Existing Diversion Structure

The existing diversion structure will be demolished and removed with an excavator. Prior to demolition of the existing diversion structure, sediment that has been deposited upstream of the structure will be removed and transported off-site for disposal at an approved facility. In total, approximately334.7 cubic yards of material associated with the existing diversion structure and irrigation structures will be removed from below the Ordinary High Water Line (OWHL) of the Little Creek stream channel and approximately 292.1 cubic yards of material will be removed from

adjacent wetlands associated with Little Creek. All excavated material not suitable for construction will be transported off-site via dump truck to an appropriate disposal site. This excavation will affect approximately 0.055 acres of Little Creek below the OHWL and 0.014 acres of adjacent wetlands.

Construction of the New Diversion and Fish Passage Structure

The new diversion structure and fish ladder will meet fish passage criteria and provide for the diversion of flow for irrigation. The construction of the new diversion structure and fish passage facility will be conducted in the dry, within the work area isolated from Little Creek flow.

Once the existing structure has been removed, and the creek channel in the vicinity of the diversion has been excavated and graded to accommodate the construction of the new diversion structure the new diversion and fish passage structure will be installed. Suitable substrate material excavated downstream will be placed back in the stream channel (actual amount TBD). Only gravel and cobble sized substrate will be placed back in the channel, no fines will be placed back in the stream channel.

Once the stream channel has been excavated and graded the new diversion structure and fish ladder will be constructed. The new structure will be constructed of cast-in-place concrete. The forms will be installed for the new structure and the concrete will be poured from a boom truck to allow accurate placement of the wet concrete. All poured concrete will be allowed to cure completely prior to removal of the cofferdams and flow returned to the work area.

Sediment fence will be installed around all ground disturbing activities to avoid and minimize potential transport of fine sediments to surface waters. Tree removal will be minimized to maintain existing habitat, however removal of some streamside vegetation will be required to allow construction to occur. All temporarily disturbed areas will be replanted with native vegetation post construction.

In total, construction of the new diversion and fish passage structure will require the placement of approximately 174.1 cubic yards of material below the OHWL of Little Creek and 156.7 cubic yards of material within adjacent wetlands associated with Little Creek. Materials to be placed will include concrete, structural fill, crushed rock and riprap.

Stream Channel Grading

The project will entail shaping of the channel to accommodate width changes and acceptable fish ladder entrance and exit conditions as Little Creek approaches and continues downstream of the diversion structure. Channel shaping is intended to minimize abrupt changes, protect the structure from scour, and provide adequate depth for fish passage. Channel reshaping will affect approximately 30 feet of stream channel upstream and 50 feet of stream channel downstream of the existing diversion dam (CH2MHILL 2011). The channel must be graded to an elevation of 2,711.0 feet to provide a 95 percent exceedance pool depth of 3.5 feet and 5 percent exceedance of 5.4 feet.

Water Gap Improvements

An existing ford (water gap) is located approximately 240 feet downstream of the existing diversion structure. The water gap provides passage between fields on either side of Little Creek. The project will entail replacement and reshaping of the materials used to create the foundation of the crossing, with the following objectives:

- Provide normal depth within the stream during a 1-cfs even that will permit fish passage
- Continuing to allow vehicular crossing over a wide range of stream flows
- Maintaining the tailwater elevations at the diversion structure

The intent of the improvements is to improve fish passage during all flows, particularly low flow, at the water gap. The improvements to the water gap will require the removal of 6.1 cubic yards of crushed rock below the OHWL of Little Creek and 4.9 cubic yards of material from adjacent wetlands associated with Little Creek. The amount of material removed will be replaced with crushed rock to provide suitable surface for the water gap feature. This work will affect 0.008 acres below the OHWL of Little Creek and 0.06 acres of adjacent wetlands.

Avoidance and Minimization Measures

The following avoidance and minimization measures will be implemented to address potential impacts associated with the Little Creek Project.

- Demarcate clearing limits with orange barrier fencing wherever clearing is proposed in or adjacent to Little Creek
- Existing access roads will be used to the extent feasible to deliver materials and equipment to the project site
- The contractor will have a written Spill Prevention, Control, and Countermeasures (SPCC) Plan prior to initiating construction. The SPCC Plan will describe measures to prevent or reduce impacts from potential accidental spills of hazardous materials (i.e. fuel, hydraulic fluid, etc.). In addition, the SPCC Plan will contain a description of all hazardous materials that will be used, including inventory, proper storage and handling, and monitoring methods. The contractor will maintain a spill kit on site during construction in order to respond to accidental spills in a timely manner
- The contractor will designate at least one employee as the erosion and sediment control lead (ESCL). The ESCL will be responsible of installing and monitoring erosion control measures and maintaining the measures. The ESCL will also be responsible for ensuring compliance with all local, state, and federal erosion and sediment control requirements
- All in-water activities will comply with the terms and conditions presented in the Removal-Fill Permit issued for the project by the DSL
- Prior to entering the water, all equipment will be checked for leaks and completely cleaned of any external petroleum products, hydraulic fluid, coolants, and other deleterious materials. Wash water will not be discharged to any water body without pretreatment to state water quality standards
- All excavated materials will be removed to an upland location where they cannot enter any water body
- Sediment-laden water generated during construction will be pumped to an infiltration site or an upland settling area, where it is subsequently treated and sediments are consolidated prior to returning water to the stream. Sediments will then be removed and disposed of in accordance with Ecology requirements. Discharge of water back to the stream will occur in such a manner as not to cause erosion

- Inspect all temporary erosion and sedimentation control measures on a regular basis. Maintain and repair these measures to ensure continued performance of their intended function. Inspect silt fences immediately after each rainfall, and at least daily during prolonged rainfall. Remove sediment as it collects behind the silt fences and prior to their final removal. After the sediment is removed, it will be disposed of at an approved facility
- A biologist will walk Little Creek from the diversion structure downstream approximately 500 feet downstream of the water gap to determine whether any adult steelhead are present and to note any evidence of spawning activity (e.g. redds, test redds, adult fish, carcasses). Steelhead redds observed within 500 feet of in-water activities will be observed during construction to ensure construction related sediment deposition does not pose a danger to the viability of the red or spawning success of adults.
- During installation of the cofferdam water located behind the cofferdam will be isolated. The water isolated behind the cofferdam will be pumped out and discharged on the ground a sufficient distance from Little Creek to allow the water to either infiltrate into the ground or flow through a series of weed-free hay bales and sediment filter fabric, which will capture and remove the sediment from the water prior to reaching the Creek
- All silt fencing and staking and other construction debris will be removed upon project completion

Chapter 2
Project Description

Overview of Construction Schedule

The discussion below provides an overview of the project construction elements, including: construction sequencing and avoidance and minimization measures to be employed as part of the project.

Construction Sequencing

Project construction will entail the following elements:

- Mobilization of construction equipment and materials
- Staging of construction equipment and materials
- Fish removal and exclusion and isolation of the in-water construction area
- Removal of the existing diversion structure
- Construction of the new diversion and fish passage structure
- Stream Channel Grading
- Water Gap Improvements
- Demobilization of the construction equipment and remaining materials

The Oregon Guidelines for timing of in-water work to protect fish and wildlife resources for Little Creek is July 1 – October 15, according to the Oregon Department of Fish & Wildlife (ODFW)

Project Components

Mobilization of Construction Equipment and Materials

The project will require the use of heavy equipment such as a backhoe or track hoe, bull dozer, dump truck, concrete truck and pick-up trucks. Construction materials will include the following:

- Concrete: f'c – 4,000 psi
- Steel: ASTM A36 min, Fy min=36ksi
- Stainless Steel: ASTM A276, AISI Type 304L
- Aluminum Plates and Angles: B208 and B308/B308M, Alloy 6061-T6
- Aluminum Tubes: B221, Alloy 6061-T6
- Metals embedded in concrete shall be stainless steel Type 304L

- Submerged metals and metals less than one foot above high water line shall be aluminum or galvanized steel
- Metals one foot or more above high water line shall be galvanized steel
- Soil Bearing Pressure: 1,500 psf assumed
- Flashboards and Stoplogs: 3x nominal redwood

Some equipment will be required to operate below the ordinary high water line (OHWL), within the active channel. However, cofferdams and bypass pipes will be employed to dewater the project site and allow construction activities to occur in the dry.

Staging of Construction Equipment and Materials

Construction staging areas will be restricted to existing access roads located south of the stream channel, to avoid potential impacts to sensitive habitat such as surface waters and wetlands.

Fish Removal and Exclusion and Isolation of the In-Water Construction Area

Prior to removal of the existing diversion structure and construction of the new diversion structure, the work area will be isolated and fish removal and exclusion efforts will be initiated. To isolate the work area, block-nets will be placed upstream of the existing diversion structure. A beach seine will then be deployed from the upstream most block-net downstream a sufficient distance to allow removal of the existing diversion structure and construction of the new diversion structure and fish ladder. A second block-net will then be deployed at the downstream extent of the work area. The beach seine will be employed within the isolated work area to capture any fish that were not displaced from the work area during the first downstream sweep with the beach seine. The beach seine will continue to be used until no fish are captured. When fish are no longer captured, a cofferdam and stream bypass system will be installed at the upstream and downstream end and dewatering of the work area will begin with the use of either a gravity system or pumps. The bypass system will be screened appropriately. A fish biologist will be onsite during dewatering to observe the dewatering of the work area and to capture and remove any fish that may remain within the isolated work area. Once the isolated work area is dewatered and only isolated pools are present and no more fish are observed within the work area, a backpack electrofishing unit will be used to ensure no more fish are located within the work area.

This same fish removal and exclusion protocols and isolation of the in-water construction area process will be employed for in-water activities associated with the improvements to the water gap (e.g. removal of existing rock and installation of new rock material). The removal of the existing diversion structure, installation of the new diversion structure, and improvements to the water gap are described below.

Removal of Existing Diversion Structure

The existing diversion structure will be demolished and removed with an excavator. Prior to demolition of the existing diversion structure, sediment that has been deposited upstream of the structure will be removed and transported off-site for disposal at an approved facility. In total, approximately351.7 cubic yards of material associated with the existing diversion structure and irrigation structures will be removed from below the Ordinary High Water Line (OWHL) of the Little Creek stream channel and approximately 292.1 cubic yards of material will be removed from

adjacent wetlands associated with Little Creek. All excavated material not suitable for construction will be transported off-site via dump truck to an appropriate disposal site. This excavation will affect approximately 0.055 acres of Little Creek below the OHWL and 0.014 acres of adjacent wetlands.

Construction of the New Diversion and Fish Passage Structure

The new diversion structure and fish ladder will meet fish passage criteria and provide for the diversion of flow for irrigation. The construction of the new diversion structure and fish passage facility will be conducted in the dry, within the work area isolated from Little Creek flow.

Once the existing structure has been removed, and the creek channel in the vicinity of the diversion has been excavated and graded to accommodate the construction of the new diversion structure the new diversion and fish passage structure will be installed. Suitable substrate material excavated downstream will be placed back in the stream channel (actual amount TBD). Only gravel and cobble sized substrate will be placed back in the channel, no fines will be placed back in the stream channel.

Once the stream channel has been excavated and graded the new diversion structure and fish ladder will be constructed. The new structure will be constructed of cast-in-place concrete. The forms will be installed for the new structure and the concrete will be poured from a boom truck to allow accurate placement of the wet concrete. All poured concrete will be allowed to cure completely prior to removal of the cofferdams and flow returned to the work area.

Sediment fence will be installed around all ground disturbing activities to avoid and minimize potential transport of fine sediments to surface waters. Tree removal will be minimized to maintain existing habitat, however removal of some streamside vegetation will be required to allow construction to occur. All temporarily disturbed areas will be replanted with native vegetation post construction.

In total, construction of the new diversion and fish passage structure will require the placement of approximately 174.1 cubic yards of material below the OHWL of Little Creek and 156.7 cubic yards of material within adjacent wetlands associated with Little Creek. Materials to be placed will include concrete, structural fill, crushed rock and riprap.

Stream Channel Grading

The project will entail shaping of the channel to accommodate width changes and acceptable fish ladder entrance and exit conditions as Little Creek approaches and continues downstream of the diversion structure. Channel shaping is intended to minimize abrupt changes, protect the structure from scour, and provide adequate depth for fish passage. Channel reshaping will affect approximately 30 feet of stream channel upstream and 50 feet of stream channel downstream of the existing diversion dam (CH2MHILL 2011). The channel must be graded to an elevation of 2,711.0 feet to provide a 95 percent exceedance pool depth of 3.5 feet and 5 percent exceedance of 5.4 feet.

Water Gap Improvements

An existing ford (water gap) is located approximately 240 feet downstream of the existing diversion structure. The water gap provides passage between fields on either side of Little Creek. The project will entail replacement and reshaping of the materials used to create the foundation of the crossing, with the following objectives:

- Provide normal depth within the stream during a 1-cfs even that will permit fish passage
- Continuing to allow vehicular crossing over a wide range of stream flows
- Maintaining the tailwater elevations at the diversion structure

The intent of the improvements is to improve fish passage during all flows, particularly low flow, at the water gap. The improvements to the water gap will require the removal of 6.1 cubic yards of crushed rock below the OHWL of Little Creek and 4.9 cubic yards of material from adjacent wetlands associated with Little Creek. The amount of material removed will be replaced with crushed rock to provide suitable surface for the water gap feature. This work will affect 0.008 acres below the OHWL of Little Creek and 0.06 acres of adjacent wetlands.

Avoidance and Minimization Measures

The following avoidance and minimization measures will be implemented to address potential impacts associated with the Little Creek Project.

- Demarcate clearing limits with orange barrier fencing wherever clearing is proposed in or adjacent to Little Creek
- Existing access roads will be used to the extent feasible to deliver materials and equipment to the project site
- The contractor will have a written Spill Prevention, Control, and Countermeasures (SPCC) Plan prior to initiating construction. The SPCC Plan will describe measures to prevent or reduce impacts from potential accidental spills of hazardous materials (i.e. fuel, hydraulic fluid, etc.). In addition, the SPCC Plan will contain a description of all hazardous materials that will be used, including inventory, proper storage and handling, and monitoring methods. The contractor will maintain a spill kit on site during construction in order to respond to accidental spills in a timely manner
- The contractor will designate at least one employee as the erosion and sediment control lead (ESCL). The ESCL will be responsible of installing and monitoring erosion control measures and maintaining the measures. The ESCL will also be responsible for ensuring compliance with all local, state, and federal erosion and sediment control requirements
- All in-water activities will comply with the terms and conditions presented in the Removal-Fill Permit issued for the project by the DSL
- Prior to entering the water, all equipment will be checked for leaks and completely cleaned of any external petroleum products, hydraulic fluid, coolants, and other deleterious materials. Wash water will not be discharged to any water body without pretreatment to state water quality standards
- All excavated materials will be removed to an upland location where they cannot enter any water body
- Sediment-laden water generated during construction will be pumped to an infiltration site or an upland settling area, where it is subsequently treated and sediments are consolidated prior to returning water to the stream. Sediments will then be removed and disposed of in accordance with Ecology requirements. Discharge of water back to the stream will occur in such a manner as not to cause erosion

- Inspect all temporary erosion and sedimentation control measures on a regular basis. Maintain and repair these measures to ensure continued performance of their intended function. Inspect silt fences immediately after each rainfall, and at least daily during prolonged rainfall. Remove sediment as it collects behind the silt fences and prior to their final removal. After the sediment is removed, it will be disposed of at an approved facility
- A biologist will walk Little Creek from the diversion structure downstream approximately 500 feet downstream of the water gap to determine whether any adult steelhead are present and to note any evidence of spawning activity (e.g. redds, test redds, adult fish, carcasses). Steelhead redds observed within 500 feet of in-water activities will be observed during construction to ensure construction related sediment deposition does not pose a danger to the viability of the red or spawning success of adults.
- During installation of the cofferdam water located behind the cofferdam will be isolated. The water isolated behind the cofferdam will be pumped out and discharged on the ground a sufficient distance from Little Creek to allow the water to either infiltrate into the ground or flow through a series of weed-free hay bales and sediment filter fabric, which will capture and remove the sediment from the water prior to reaching the Creek
- All silt fencing and staking and other construction debris will be removed upon project completion

Chapter 3
Project Action Area

The "action area" for the Little Creek Diversion No. 1 Fish Passage Project is defined as "all areas to be affected directly or indirectly by the proposed action and not merely the immediate area directly adjacent to the action." Therefore, the action area includes the project site and all areas surrounding the project site where construction activities could potentially affect the environment, either directly, indirectly, or through interrelated or interdependent actions.

The Little Creek Diversion No. 1 Fish Passage Project is located in a rural setting and will require the use of heavy machinery, including a tracked excavator, dump trucks, and graders. Typical noise levels generated by this type of heavy equipment are around 88 A-weighted decibels (dBA) at 50 feet, decreasing to approximately 40 dBA at 4,159 feet (Thalheimer 2000). Ambient noise levels in a rural setting are approximately 40 dBA (Thalheimer 2000). Thus, construction noise levels are anticipated to be at ambient noise levels at a distance of 4,159 feet (0.79 mile) from the project site, based on the rural setting in which the project is located and the noise levels generated by project construction activities. The action area associated with impacts from noise is thus delineated at 4,159 feet.

Temporary degradation to water quality associated with project construction is not anticipated to occur beyond 300 feet downstream of any project-related in-water work with the incorporation of appropriate BMPs to avoid or minimize temporary increases in turbidity associated with in-water work.

Removal of the existing diversion structure and installation of the new diversion structure will provide access to anadromous and resident fish that currently cannot pass upstream of the Little Creek Diversion. Access will be restored to approximately 6.5 river miles (RMs) of Little Creek, upstream of the diversion structure.

No interrelated or interdependent actions are anticipated as a result of the project.

The construction activities required to complete the Project and the potential habitat gain were the basis of the determination of the project action area. A project action area of 4,159 feet radius around the Little Creek Diversion No. 1, plus the instream habitat gain of 6.5 miles for anadromous and resident fish is adequate to analyze potential noise and in-water impacts to federally listed species resulting from the Project.

Figure 1 indicates the project vicinity and project action area.

Chapter 4
Species Occurrence

The species addressed in this Biological Assessment were identified based on the following information:

- A species list was obtained from the USFWS web site on April 1, 2011 (Appendix B). The species identified by the USFWS are those that are known to occur or have the potential to occur in Union County including the project action area.
- A species list was obtained from the NMFS web site on April 1, 2011 (Appendix B). The species identified on the NMFS web site are those that are known to occur or have the potential to occur in Oregon State, including the project action area.

The following sections describe the occurrence of federally listed species identified by the USFWS as occurring in Union County, and by the NMFS as occurring along the west coast of the U.S.

Another species not included in the table below, but identified as potentially occurring in Union County according to the FWS includes the gray wolf. Suitable habitat for the gray wolf is not present in the project action area, and therefore the gray wolf is not expected to occur in the project action area and thus is not discussed further in this BA.

The federal status and habitat requirement and ecology for each of those species that are known to occur, or may occur in Union County and do occur or may occur within the project action area are discussed in further detail in Appendix C. Table 4-1 summarizes the federally protected species that are known to occur, or that may occur in the project action area.

Table 4-1. Federally Protected Species Identified as Occurring in Union County, Oregon

Species Common Name (*Scientific Name*)	Federal ESA Status (Critical Habitat Status)	Occurrence in the Project Action Area
Chinook Salmon of the Snake River Spring/Summer-run ESU (*Oncorhynchus tshawytscha*)	Threatened (Designated)	Present in Catherine Creek approximately 0.81-miles (4,277 feet) downstream of the project site. Critical habitat was designated on 10/25/1999, but was not designated in Catherine Creek.
Steelhead of the Snake River Basin DPS (*Oncorhynchus mykiss*)	Threatened (Designated)	Present in Catherine and Little Creeks within the project action area. Critical habitat was designated on 9/2/2005, in both Catherine Creek and Little Creek.
Bull Trout of the Columbia River DPS (*Salvelinus confluentus*)	Threatened (Designated)	Not documented in Little Creek within the project action area. Critical habitat was designated on 9/26/2005 and revised on 10/18/2010. Critical habitat does not occur in Little Creek within the project action area; however critical habitat has been designated in Catherine Creek, approximately 0.81-miles (4,277 feet) downstream of the project site.
Howell's Spectacular Thelypody (*Thelypodium howellii* spp. *specatilis*)	Threatened (None Proposed or Designated)	Nearest population is approximately 9 miles south of the project site, outside the project action area.

ESU = evolutionarily significant unit; DPS = distinct population segment

Chinook Salmon of the Snake River Spring/Summer-run Evolutionarily Significant Unit

Chinook salmon of the Spring/Summer-run ESU are documented in Catherine Creek, approximately 0.81-miles (4,277 feet) downstream of Little Creek Diversion No. 1 (StreamNet 2011). The Snake River Spring/Summer-run Chinook salmon is classified as distinct based on geographic distribution.

Critical Habitat

Critical habitat for the Snake River Spring/Summer-run Chinook salmon ESU was designated in Catherine Creek on October 25, 1999 (64 FR 57399). Critical habitat, as designated includes Catherine Creek, which corresponds to documented Chinook salmon presence. Little Creek was not designated as critical habitat.

Steelhead of the Snake River Basin Distinct Population Segment

Steelhead of the Snake River Basin DPS are documented in Little Creek (StreamNet 2011). Steelhead presence is documented upstream to a point approximately 6.5 miles upstream of the Little Creek Diversion No. 1 project site (StreamNet 2011).

Little Creek has summer steelhead. The run timing for summer steelhead is distinct; occurring primarily May through October.

Critical Habitat

Little Creek was designated as critical habitat for the Snake River Basin steelhead DPS on September 2, 2005 (70 FR 52630).

Bull Trout of the Columbia River Distinct Population Segment

Bull trout are documented in Catherine Creek, approximately 0.8-miles (4,200 feet) downstream of Little Creek Diversion No. 1 (StreamNet 2011), and may occur in Little Creek when conditions are suitable (i.e. spring run-off events), when the water temperature and flow conditions are suitable.

Critical Habitat

Critical habitat for the Columbia River bull trout DPS was revised on October 18, 2010 (75 FR 63898). Revised critical habitat is designated in the Grande Ronde River subbasin, but not in Little Creek (75 FR 63986).

Howell's Spectacular Thelypody (*Thelypodium howellii* ssp. s*pecatbilis*)

Howell's spectacular thelypody occurs in moist alkaline meadow habitats in the Baker-Powder River Valley bottomlands in northeast Oregon (Baker and Union counties). Populations range from approximately 1,000 m. (3,000 ft.) to 1,100 m. (3,300 ft.). All known remaining thelypody populations occur within or directly adjacent to agricultural fields or urban areas (USFWS 2002).

Thelypody seems to thrive on sites that are ephemerally moist, and high spring water tables may be essential to the thelypody. Additionally, thelypody may be dependent on periodic spring flooding since it appears to colonize areas adjacent to streams that have flooded (USFWS 2002).

Associated plant species include *Dlymus cinereus* (Great Basin wildrye), *Distichlis stricta* (saltgrass) *Sarcobatus vermiculatus* (greasewood), *Eriacameria viscidiflora* (green rabbitbrush), and *Poa juncifolia* (alkali bluegrass).

During wetland delineations completed for the project in October of 2010, none of the associated plant species were observed in the vicinity of the project site and soil conditions did not appear to be alkaline enough to support this Howell's spectacular thelypody.

Critical Habitat

Critical habitat has been neither designated nor proposed for Howell's Spectacular Thelypody.

Chapter 5
Environmental Baseline

Salmonid Habitat Conditions

The discussion below addresses the existing conditions within the action area of the project. For salmonids the discussion is focused on those elements of the environment identified by the USFWS in the document titled *A Framework to Assist in Making Endangered Species Act Determinations of Effect for Individual of Grouped Actions at the Bull Trout Subpopulation Watershed Scale* (USFWS 1998) and *Making Endangered Species Act Determinations of Effect for Individual or Grouped Actions at the Watershed Scale* (1996) prepared by the NMFS. These matrices were developed by the USFWS and the NMFS to analyze the effects of activities on federal forestlands in the Pacific Northwest, where the quality and condition of the habitat elements are generally rather good. A matrix for streams in more urbanized setting has not been established.

This matrix was developed by the USFWS to analyze the effects of activities at the watershed scale and in a wide range of environmental conditions.

Please refer to Table 5-1 and Table 5-2 for an overview of the environmental baseline conditions for the Catherine Creek subbasin. Little Creek is a tributary to Catherine Creek and both subbasins have similar habitat conditions and land uses, thus environmental baseline conditions in Little Creek are anticipated to be similar to those documented in Catherine Creek.

The NMFS describes the environmental baseline in terms of the biological requirements for habitat features and processes necessary to support all life stages of each listed species within the action area. Both Snake River Spring/Summer-run Chinook salmon and Snake River Basin steelhead may occur within the project action area. The biological requirements of salmon and steelhead vary depending on the life history stage present and the natural range of variation present within the system. During spawning migrations, adult salmon require clean water with cool temperatures and access to thermal refugia, dissolved oxygen near 100% saturation, low turbidity, adequate flows and water depths to allow passage over barriers to reach spawning sites, and sufficient holding and resting sites. Anadromous fish select spawning areas based on species-specific requirements of flow, water quality substrate size, and groundwater upwelling. Embryo survival and fry emergence depend on substrate conditions (e.g. gravel size, porosity, permeability, oxygen concentrations), substrate stability during high flows, and, for most species, water temperatures of 13˚C (55˚F) or less. Habitat requirements for juvenile rearing include seasonally suitable microhabitats for holding, feeding, and resting. Migration of juveniles to rearing areas, whether the ocean, lakes, or other stream reaches, requires access to these habitats. Physical, chemical, and thermal conditions may impede movements of adult or juvenile fish (NMFS 2007).

Using the NMFS' matrix of pathways and indicators (NMFS 1996), previous ESA Section 7 consultation documents have shown that within Catherine Creek the physical barriers indicator is *not properly functioning*; the chemical contaminants/nutrients indicator is *properly functioning,* and; the remaining indicators are *functioning at risk*.

Using the USFWS' matrix of pathways and indicators (USFWS 1998), those indicators mentioned above related to salmon and steelhead are the same. Those indicators unique to bull trout (i.e.

subpopulation size, growth and survival, life history diversity and isolation, persistence and genetic integrity, as well as the integration of species and habitat conditions) are presumed to be either *functioning at risk* or *functioning at unacceptable risk* within the Catherine Creek subbasin based on the relatively small size of the bull trout population within the Catherine Creek subbasin [e.g. <100 adult bull trout (ODFW 2005)]. Conditions within the Little Creek subbasin are assumed to be similar to those documented in Catherine Creek as Little Creek is a tributary to Catherine Creek and land use and habitat conditions are similar in both subbasins. However, bull trout are not known to occur in Little Creek, but there is nothing that precludes bull trout in Catherine Creek from accessing Little Creek, thus they are assumed to be present in Catherine Creek at least part of the year.

Table 5-1. Overview of the Environmental Baseline Conditions in Catherine Creek

Diagnostic/Pathway Indicators	Environmental Baseline Conditions	Effects of Project Actions on Environmental Baseline Conditions
	Catherine Creek subbasin	
Water Quality		
Temperature	Functioning at Risk	Maintain
Sediment/Turbidity	Functioning at Risk	Maintain
Chemical Contamination/Nutrients	Properly Functioning	Maintain
Habitat Access		
Physical Barriers	Not Properly Functioning	Improve
Habitat Elements		
Substrate Embeddedness	Functioning at Risk	Maintain
Large Woody Debris	Functioning at Risk	Maintain
Pool Frequency	Functioning at Risk	Maintain
Pool Quality	Functioning at Risk	Maintain
Off-Channel Habitat	Functioning at Risk	Maintain
Refugia	Functioning at Risk	Maintain
Channel Conditions and Dynamics		
Width/Depth Ratio	Functioning at Risk	Maintain
Streambank Condition	Functioning at Risk	Maintain
Floodplain Connectivity	Functioning at Risk	Maintain
Flow/Hydrology		
Change in Peak/Base Flows	Functioning at Risk	Maintain
Increase in Drainage Network	Functioning at Risk	Maintain
Watershed Conditions		
Road Density and Location	Functioning at Risk	Maintain
Disturbance History	Functioning at Risk	Maintain
Riparian Conservation Areas	Functioning at Risk	Maintain

Table 5-2. Overview of Environmental Baseline Conditions in Catherine Creek Specific to Bull Trout

Diagnostic/Pathway Indicators	Baseline Environmental Conditions	Effects of Project Actions on Environmental Conditions
	Catherine Creek	
Subpopulation Characteristics within Subpopulation Watersheds		
Subpopulation Size	Functioning at Risk	Maintain
Growth and Survival	Functioning at Risk	Maintain
Life History Diversity and Isolation	Functioning at Risk	Maintain
Persistence and Genetic Integrity	Functioning at Risk	Maintain
Integration of Species and Habitat Conditions	Functioning at Risk	Maintain

Chapter 6
Effects Analysis

Direct and indirect effects were analyzed using information compiled from the literature review, review of engineering drawings, and discussion with project engineers and managers. The extent or limits of impacts resulting from project timing, construction methods, and construction sequencing were derived from project plans, consultation with project managers and engineers, and scientific literature.

Direct effects considered include physical impacts to the species as well as designated critical habitat that could potentially be impacted by construction activities.

Indirect effects are effects that are caused by the action but occur later in time. Indirect effects evaluated include potential changes to habitat that evolve following project construction and future disturbance related to project operation and maintenance.

Potential interrelated and interdependent actions and beneficial effects were evaluated as well. Interrelated actions include activities that are part of the larger action and depend on the larger action for their justification. Interdependent activities include those activities that have no independent utility apart from the action under consultation. Beneficial effects are contemporaneous positive effects without any long-term adverse effects.

The effects analysis considers BMPs and conservation measures intended to minimize or avoid project impacts.

The effects of the Little Creek Project on Essential Fish Habitat have been analyzed per the requirements of the Magnuson-Stevens Fishery Conservation and Management Act. The Essential Fish Habitat assessment is provided in Appendix D of this Biological Assessment.

Direct Effect

Direct effects are defined as the direct or immediate effects of the project. Direct effects include all immediate impacts (negative and beneficial) from project-related actions (e.g. construction-related impacts such as noise disturbance or loss of habitat) and those disturbances that are directly related to project elements that occur very close to the time of the action itself (e.g. sedimentation).

The discussion below focuses on the direct effects of the Little Creek Project related to water quality, vegetation and habitat modification, fish handling and exclusion, channel dewatering and the impacts to the primary constituent elements (PCEs) of Pacific salmon, steelhead and bull trout designated critical habitat. The PCEs are defined as those elements of the designated critical habitat essential to the conservation of the species (70 FR 52664).

Water Quality and Quantity

Construction of the Little Creek Project may affect water quality through disturbance and suspension of sediments within the water column from in-water work.

Sedimentation and Turbidity

Disturbance, placement, and relocation of sediments and substrate materials while constructing the Little Creek project will increase turbidity in the water column and could result in sedimentation, or coverage of benthic habitat and organisms. A variety of species (including listed species) may either avoid or be attracted to construction sites due to elevated turbidity and suspension of benthic organisms in the water column during performance of covered activities.

Sedimentation caused by human activity and natural erosion can affect fish through modifications of habitat, such as filling pools, filling interstitial spaces in substrate, changing invertebrate communities (food base), and reducing the interchange of surface and subsurface waters. Increases in fine sediments in low-velocity stream reaches could also cover suitable spawning gravel. Other potential effects to streams include channel braiding, increased width:depth ratios, increased incidence and severity of bank erosion, reduced pool volume and frequency, and increased subsurface flow. These types of changes can result in a reduction in the quality and quantity of spawning and rearing habitat (Meehan 1991).

The duration and intensity of turbidity depends on the quantity of materials in suspension, the particle size of suspended sediments, the volume and velocity of the receiving water in the affected area, and the physical and chemical properties of the suspended sediments (NMFS 2001).

Turbidity within the immediate vicinity of the Little Creek project (several meters) will likely temporarily exceed the background levels. In salmonids, turbidity has been linked to a number of behavioral and physiological responses (e.g., gill flaring, coughing, avoidance of the area and increased blood sugar levels), indicating some level of stress (Berg and Northcote 1985; Servizi and Martens 1992). Other potential effects of turbidity include reducing the levels of dissolved oxygen in the affected area, altering the suitability of spawning areas, and smothering benthic organisms and communities (Martin et al. 1977, Carrasquero 2001, Mulvihill et al. 1980).

Much of the scientific literature evaluating the effects of turbidity on fish is discussed in relation to turbidity concentrations associated with dredging. No dredging is proposed as part of the Little Creek Project, although grading and excavation within the active channel, below the OHWL will occur, but isolated from surface waters and in-the-dry. Any potential increases in turbidity associated with other construction activities (e.g., removal of the existing diversion structure and construction of the new diversion structure, gravel replacement, bank stabilization, etc.) will generally be substantially lower than those associated with larger dredging activities (i.e. dredging of shipping lanes). Several studies indicate that suspended sediment concentrations occurring near dredging activity does not cause gill damage in salmonids. Servizi and Martens (1992) found that gill damage was absent in under yearling coho salmon exposed to concentrations of suspended sediments lower than 3,143 mg/l. A negligible risk of gill tissue damage is also expected for adult and subadult salmonids exposed to turbidity generated by dredging activities. This assumption is based on the fact that salmonids in these life stages are generally more tolerant of elevated suspended sediment levels (Stober et al. 1981), and are generally able to avoid localized areas of elevated turbidity associated with construction activities.

Suspended sediments have been shown to cause stress in salmonids, but at concentrations higher than those typically measured during dredging. Under yearling coho salmon exposed to suspended sediment concentrations above 2,000 mg/l were physiologically stressed as indicated by elevated blood plasma cortisol levels (Redding et al. 1987). Although turbidity may cause stress to salmonid

species, studies by Redding et al. (1987) found that relatively high suspended sediment loads (2,000 to 2,500 mg/l) did not appear to be severely stressful to yearling salmon.

While it is difficult to determine exactly how much of a temporary increase in turbidity will result from the covered activities, suspended sediments are expected to be short term and will not result in chronic sediment delivery to adjacent waters. Minimization measures have been developed to reduce the potential for elevated turbidity, as described previously in Chapter 2.

The Little Creek project is not expected to have such significant impacts on sedimentation or turbidity within Little Creek due to the incorporation of minimization measures intended to avoid or minimize such impacts. The Little Creek project will cause short-term, localized sedimentation and increased turbidity, but not to an extent that will have a measurable impact to aquatic habitats in Little Creek.

Vegetation and Habitat Modification

Riparian vegetation directly influences the quality of salmonid habitat, affecting cover, food, instream habitat complexity, streambank stability, and temperature regulation. LWD from streamside trees provides cover and habitat complexity, an essential component of fish habitat. Riparian vegetation also provides shade and an insulating canopy that moderates water temperatures in both summer and winter. Riparian vegetation provides a filter that reduces the transport of fine sediment to the stream, and the roots provide streambank stability and cover for rearing fish (Meehan 1991).

Riparian vegetation influences the food chain of a stream, providing organic detritus and terrestrial insects. Such vegetation also controls aquatic productivity dependent on solar radiation (Meehan 1991). Because of the numerous ways riparian vegetation influences the stream ecosystem, the effects of altering riparian vegetation are highly variable, ranging from increased sedimentation and stream temperatures to decreased food production and habitat complexity.

The installation of a new diversion structure and fish passage facility on Little Creek will require the removal of shrubs, bushes and grasses, to accommodate the movement of construction equipment. The removal of riparian vegetation will be limited to the area immediately adjacent to the existing diversion structure. Removal of riparian vegetation may expose soils to erosive forces such as wind and rain. No large trees will be removed as a result of the project thus the existing riparian trees adjacent to the project site will continue to provide stream shading despite the removal of understory vegetation. Some smaller willows and other shrubs may need to be removed or pruned to construct the project, but any removal or pruning will be kept to the minimum necessary to construct the project.

Riparian vegetation impacted during project construction will be replaced with native vegetation appropriate for the area, in the first fall following completion of project construction. The effects of riparian vegetation removal are limited to the area immediately adjacent to the project site and expected to be temporary and insignificant.

Fish Exclusion and Removal

Fish exclusion and removal will require the use of a beach seine. No electrofishing will be employed to remove fish from the work area. A beach seine will be deployed from shore and will move waterward from shore to encourage fish to leave the work area. Juvenile salmonids that may occur

in the vicinity will likely be located in the water column, above the substrate, and will move away from the beach seine as it is deployed.

Fish remaining in the isolated work area are likely to be sculpin or similar benthic-centric species, which will be positioned on, or beneath the substrate and may not leave the work area during seining activities. These fish will be removed with dip nets as the work area is dewatered. Once fish have been excluded and removed from the isolated work area, a silt fence will be deployed to ensure turbidity levels are not elevated as a result of the Little Creek Project.

Once fish have been removed and the work area has been isolated, a cofferdam will be installed upstream along with bypass pipes and pumps. The bypass pipes will be used to pump stream flow around the isolated work area. Once the upstream cofferdam is in place and the bypass pipes and pumps are operational, the work area will be dewatered to the extent feasible before the downstream cofferdam is installed. Once the downstream cofferdam is installed any water remaining within the isolated work area between the upstream and downstream cofferdams will be pumped out and discharged downstream of the downstream cofferdam. All pumps will be screened per ODFW and NMFS screening criteria [3/32-inches (2.38 mm) for perforated plate and woven wire screens with minimum 27% open area].

The silt fence will remain in place for up to two days following construction prior to removal of the beach seine to allow suspended sediments to settle out of the water column. During removal, the downstream silt fence will be removed first.

Beach seining can affect fish in several ways, causing stress, scale loss, physical damage, suffocation, or desiccation. These stresses are more likely when fish are captured as a result of beach seining. For the Little Creek Project, the beach seine will not be used to capture fish but to exclude fish from the work area.

All in-water work, including fish exclusion and removal, will occur during the recommended in-water work windows (July 1 through October 31).

Channel Dewatering

Channel dewatering will be required for a relatively small segment of Little Creek. Approximately 50 feet of channel upstream and 250 feet of channel downstream of Diversion No. 1 will be dewatered to allow construction to be performed in-the-dry, including improvements to the water gap.

Channel dewatering can affect benthic macroinvertebrates, which are consumed by salmonids and may represent a substantial portion of their diet at various times of the year. The effect of macroinvertebrate loss resulting from channel dewatering on federally protected salmonids is difficult to quantify. The dewatering duration and the macroinvertebrate species exposed to the dewatered condition will be factors in the how those species of invertebrates are affected. However, assuming channel dewatering eliminates all macroinvertebrates in the dewatered portion of the channel, once flow is returned to the dewatered portion of the channel, benthic macroinvertebrates that drift from unaffected areas upstream and insects from allochthonous sources will begin to recolonize the dewatered portion of the channel.

When the disturbance is temporary, a rapid recolonization of the disturbed area is anticipated. Reported rates of recolonization range from about 1 month to 45 days (NMFS 2003). NMFS (2003)

did not indicate the duration or area of the dewatering that corresponds to this recolonization time frame.

The Little Creek Project will also entail channel grading and filling to provide as much water depth as possible during low flow conditions downstream of the diversion structure. Disturbance of the channel associated with grading will result in direct disturbance of benthic macroinvertebrates and their habitat. Loss of macroinvertebrates will result from desiccation and grading activities. Channel dewatering typically results in a localized loss of benthic macroinvertebrate abundance. The loss of benthic macroinvertebrates associated with channel modifications is anticipated to be similar to that associated with channel dewatering (e.g., recolonization in 1 month to 45 days).

The affected areas support few species of macroinvertebrates, due to the relatively homogenous substrate found at the project site. The substrate is composed primarily of fine sediment upstream of the existing diversion structure and cobble (quarry spalls), gravel and fine sediment downstream of the diversion structure.

Fish Passage

The project will restore fish access to approximately 6.5 miles of potential fish habitat that is currently inaccessible due to the barrier posed by the Little Creek Diversion No. 1. Restoring fish access upstream of the diversion structure will result in a beneficial effect to federally protected salmon and steelhead.

Impacts on Designated Critical Habitat for Chinook Salmon of the Snake River Spring/Summer-run ESU

Critical habitat for Chinook salmon was designated in Catherine Creek on October 25, 1999 (64 FR 57399). Critical habitat occurs in Catherine Creek, approximately 0.8-miles downstream of the project site and beyond the extent of the project action area, thus the project will not impact designated critical habitat for Chinook salmon of the Snake River Spring/Summer-run ESU.

Impacts on Designated Critical Habitat for Steelhead of the Snake River Basin DPS

Critical habitat for steelhead has been designated in Little Creek and does occur within the project action area. The impacts of the project on those Primary Constituent Elements (PCEs) identified as essential to the conservation of steelhead are described below.

The ESUs and DPSs addressed in the designation of critical habitat share many of the same rivers and estuaries and have similar life history characteristics/strategies, and therefore have many of the same PCEs in the their preferred habitats. These PCEs include sites essential to support one or more life history stages of the ESU or DPS (sites for spawning, rearing, migration and foraging). These sites in turn contain physical or biological features essential to the conservation of the ESU or DPS (for example, spawning gravels, water quality and quantity, side channels, forage species). The specific PCEs potentially affected by the project are addressed below.

Spawning Sites

Freshwater spawning by steelhead has been documented in Little Creek within the project action area. Spawning habitat is limited in Little Creek due to the relatively flat nature of the stream and the land use adjacent to the stream (e.g. agriculture). High quality spawning habitat is necessary for successful propagation. Salmon and steelhead require pea- to cobble-sized gravel free of sediment, which might limit water flow through the substrate and consequently suffocate eggs.

The project will provide fish passage at the project site, which will in turn provide access upstream of the diversion to approximately 6.5 miles of potentially suitable spawning habitat.

Rearing Sites

Freshwater rearing habitat for salmon and steelhead occurs in Little Creek. Rearing sites require water quantity and floodplain connectivity; water quality and; natural cover such as shade, submerged and overhanging large wood, log jams and beaver dams; aquatic vegetation, large rocks and boulders, side channels, and undercut banks.

Once salmon and steelhead have hatched and left the gravel, they remain in freshwater from a few weeks to two years, depending on species and habitat conditions (i.e. water temperature, habitat capacity). During this time, the fish require pools and riffles in which to hold, feed, and avoid predators. Sufficient water quantity must be available in those freshwater areas that afford rearing habitat.

Short term impacts on benthic invertebrates, a primary constituent of juvenile salmon and steelhead diets, could occur from replacement of the diversion when a relatively small portion of the stream channel located upstream and downstream of the diversion on Little Creek is dewatered. However, benthic macroinvertebrate populations are expected to recover relatively quickly following these activities. Since invertebrate communities will recolonize the relatively small area impacted, no long-term loss of biological productivity or prey base for juvenile salmon and steelhead is expected.

The impacts on shoreline, riparian, and aquatic vegetation and the effects on rearing habitat are considered to be insignificant and/or discountable due to the avoidance and minimization measures that will be employed and the relatively small scale of the impacts.

The avoidance and minimization measures are presented in Chapter 2.

Migration Corridors

Freshwater migration corridors occur in Little Creek. Adult fish migrate within Little Creek approximately 6.5 miles upstream of the diversion structure. Juvenile fish migrate and rear in the lower reaches of the stream. Migration corridors must be free of obstruction and healthy water quantity and quality conditions must include natural cover such as submerged and overhanging large wood, aquatic vegetation, large rocks and boulders, side channel habitat, and undercut banks to support juvenile and adult mobility and survival.

The ability to migrate is critical to the persistence of salmonid populations. Salmon and steelhead rely on migratory corridors to move from spawning and rearing habitats to the ocean for foraging and growth, and ultimately back to freshwater for spawning. The use of migratory corridors by salmon and steelhead also results in increased dispersion, facilitating gene flow among local populations when individuals from different local populations interbreed or stray. Local

populations that have been extirpated by catastrophic events may become reestablished as a result of movements by salmon and steelhead through migratory corridors.

The project will have insignificant or discountable impacts on water quantity and quality in Little Creek due to the inclusion of appropriately sized stormwater detention facilities and appropriate water quality treatment measures.

The impacts on natural cover such as shoreline, riparian, and aquatic vegetation and habitats and the effects on migration corridors are considered to be insignificant and discountable due to the avoidance and minimization measures that will be employed as part of the project.

The avoidance and minimization measures are presented in Chapter 2.

Estuarine Areas

Estuarine habitat does not occur in the project action area, thus the project will not impact this PCE.

Nearshore Marine Areas

Nearshore marine areas do not occur in the project action area, thus the project will not impact this PCE.

Offshore Marine Areas

Offshore marine areas do not occur in the project action area, thus the project will not impact this PCE.

Impacts on Designated Critical Habitat for Bull Trout of the Columbia River DPS

Critical habitat for bull trout was designated in Catherine Creek on September 26, 2005 (70 FR 56285). Critical habitat occurs in Catherine Creek, approximately 0.8-miles downstream of the project site and beyond the extent of the project action area, thus the project will not impact designated critical habitat for bull trout of the Columbia River DPS.

Indirect Effects

The project will not significantly modify the character of Little Creek, although localized improvements to habitat conditions will result from the project including creation of pool habitat and access to suitable habitat upstream of the diversion structure that is currently inaccessible.

The indirect effects of the project are intended to provide significant benefits to salmonids within Little Creek, with the overall objective of restoring access to currently inaccessible habitat while working within the constraints imposed by landowners (e.g. maintaining irrigation flows, improving reliability of irrigation withdrawal structures).

The project will restore access to approximately 6.5 miles of stream habitat, increasing the amount of potentially suitable spawning, rearing and migration habitat available to salmon and steelhead.

Effects of Interrelated and Interdependent Actions

No interrelated or interdependent actions associated with the Little Creek Project have been identified, thus no effects from interrelated or interdependent actions are anticipated.

Chapter 7
Effect Determinations

Chinook Salmon of the Snake River Spring/Summer-run ESU

The information and analysis presented in this Biological Assessment was the basis of the finding that the Little Creek Project warrants an effect determination of **May Affect, Not Likely to Adversely Affect** for Chinook salmon of the Puget Sound ESU.

A determination of **May Affect** is warranted for the Little Creek Project based on the following rationale:

- The occurrence of Chinook salmon is documented in the Catherine Creek subbasin, within the project action area.
- The Little Creek Project will require in-water work and could affect habitat conditions for Chinook salmon in the project action area over the short-term (construction).

A determination of **Not Likely to Adversely Affect** is warranted based on the following rationale:

- All in-water work will occur during the ODFW approved in-water work window (July 1 - October 15 for Catherine Creek, up to and including Little Creek), which will minimize the number of Chinook salmon and life history stages that may be present in the project action area during in-water work.
- Chinook salmon are not anticipated to be present in Little Creek, thus fish removal and exclusion activities are not anticipated to result in the capture or handling of Chinook salmon thereby avoiding potential impacts associated with stress, injury and/or mortality.
- The project will occur when adult Chinook salmon are potentially present in Catherine Creek. Avoidance and Minimization Measures will be employed to protect Chinook salmon that may occur in Catherine Creek.
- The potential for the Little Creek project to affect Chinook salmon in Catherine Creek is discountable due to the distance to the confluence of Little Creek and Catherine Creek (0.81-miles).

Critical Habitat

The information and analysis presented in this Biological Assessment support the finding that this Little Creek Project warrants an effect determination of **No Effect** for designated critical habitat for Chinook salmon of the Snake River Spring/Summer-run ESU.

A determination of **No Effect** is warranted based on the following rationale:

- Chinook salmon designated critical habitat does not occur in within the project action area in either Little Creek or Catherine Creek.

Steelhead of the Snake River Basin DPS

The information and analysis presented in this Biological Assessment was the basis of the finding that the Little Creek Project warrants an effect determination of **May Affect, Likely to Adversely Affect** for steelhead of the Snake River Basin DPS.

A determination of **May Affect** is warranted for the Little Creek Project based on the following rationale:

- The occurrence of steelhead is documented in Little Creek, within the project action area.
- The Little Creek Project will require in-water work and could affect habitat conditions for steelhead in the project action area over both the short-term (construction) and the long-term (6.5 miles of potential habitat gain in Little Creek upstream of diversion barrier).

A determination of **Likely to Adversely Affect** is warranted based on the following rationale:

- All in-water work will occur during the ODFW approved in-water work window of July 1 - October 15 for Catherine Creek (up to and including Little Creek), which will minimize the number of steelhead and life history stages that may be present in the project action area during in-water work.
- Steelhead may be present in Little Creek, thus fish removal and exclusion will be required to remove fish from the work area and to allow work below the Ordinary High Water Line (OHWL) to occur in the dry. Fish removal and exclusion will involve the capture and handling of fish which may result in stress, injury and/or mortality of juvenile steelhead.

Critical Habitat

The information and analysis presented in this Biological Assessment support the finding that this Little Creek Project warrants an effect determination of **May Affect, Not Likely to Adversely Affect** for designated critical habitat for the steelhead of the Snake River Basin DPS.

A determination of **May Affect** is warranted based on the following rationale:

- Designated critical habitat does occur in Little Creek in the project action area.
- The Little Creek Project will involve modification of this designated critical habitat.

A determination of **Not Likely to Adversely Affect** is warranted based on the following rationale:

- The project will replace an existing barrier structure with a fish passable structure, providing steelhead with access to approximately 6.5 miles of habitat that is currently inaccessible.
- The project will have a net positive effect on three of the PCEs; spawning rearing and migration by replacing an existing barrier with a fish passable structure, providing access to 6.5 miles of currently inaccessible habitat.

Bull Trout of the Coastal/Puget Sound DPS

The information and analysis presented in this Biological Assessment was the basis of the finding that the Little Creek Project warrants an effect determination of **May Affect, Not Likely to Adversely Affect** for bull trout of the Columbia River DPS.

A determination of **May Affect** is warranted for the Little Creek Project based on the following rationale:

- The occurrence of bull trout is documented in the Catherine Creek subbasin, within the project action area.
- The Little Creek Project will require in-water work and could affect habitat conditions for bull trout in the project action area over the short-term (construction).

A determination of **Not Likely to Adversely Affect** is warranted based on the following rationale:

- All in-water work will occur during the ODFW approved in-water work window of July 1 - October 15 for Catherine Creek (up to and including Little Creek), which will minimize the number of bull trout and life history stages that may be present in the project action area during in-water work.
- Bull trout are not anticipated to be present in Little Creek, thus fish removal and exclusion activities are not anticipated to result in the capture or handling of bull trout thereby avoiding potential impacts associated with stress, injury and/or mortality.
- The project will occur when bull trout are potentially present in Catherine Creek. Avoidance and Minimization Measures will be employed to protect bull trout that may occur in Catherine Creek.

Critical Habitat

The information and analysis presented in this Biological Assessment support the finding that this Little Creek Project warrants an effect determination of **No Effect** for designated critical habitat for bull trout of the Columbia River DPS.

A determination of **No Effect** is warranted based on the following rationale:

- Bull trout designated critical habitat does not occur in within the project action area in either Little Creek or Catherine Creek.

Howell's Spectacular Thelypody

The information and analysis presented in this PBE support the finding that the project warrants an effect determination of **No Effect** for Howell's spectacular thelypody.

A determination of **No Effect** is warranted based on the following rationale:

- Howell's spectacular thelypody is limited in range in Union County

- The nearest documented occurrence of Howell's spectacular thelypody is approximately nine miles south of the project site
- Howell's spectacular thelypody was not observed during wetland delineations at the project site, nor were any of the plants typically associated with Howell's spectacular thelypody.
- The activities associated with this project will not occur in areas where the presence of Howell's spectacular thelypody is documented in Union County
- The project will not modify or otherwise alter potentially suitable habitat for Howell's spectacular thelypody

Critical Habitat

Critical habitat has neither been proposed nor designated for Howell's spectacular thelypody, thus the project will have **No Effect** on critical habitat for this species.

Chapter 8
References

Berg, L. and T.G. Northcote. 1985. Changes in territorial, gill-flaring, and feeding behavior in juvenile coho salmon (*Oncorhynchus kisutch*) following short-term pulses of suspended sediment. Can. J. Fish. Aquat. Sci. 42: 1410-1417.

Carrasquero, Jose. 2001. White Paper - Over-water structures: freshwater issues. Prepared by Herrera Environmental Consultants. Submitted to Washington Department of Fish and Wildlife, Washington Department of Ecology, and Washington Department of Transportation. April 12.

Martin, D. J., E. O. Salo, and B. P. Snyder. 1977. Field bioassay studies on the tolerances of juvenile salmonids to various levels of suspended solids. Final Report, FRI-UW-7713, Fisheries Research Institute, University of Washington, Seattle, Washington. 35 p.

Meehan, W.R. 1991. Influences of Forest and Rangeland Management on Salmonid Fishes and their Habitats. American Fisheries Society Special Publication 19.

Mulvihill, E.L., C.A. Francisco, J.B. Glad, K.B. Kaster, and R.E. Wilson. 1980. Biological impacts of minor shorelines structures on the coastal environment: State of the art review, Volume II, data printout. FWS/OBS-77/51. Prepared by BEAK Consultants, Inc., Portland, Oregon, with O. Beeman, for National Coastal Ecosystems Team, Office of Biological Services, Fish and Wildlife Service, U.S. Department of the Interior.

National Marine Fisheries Service (NMFS). 1996. Making Endangered Species Act Determinations of Effect for Individual or Grouped Actions at the Watershed Scale. Seattle, WA. 31 pp.

NMFS. 2003. Biological Opinion – Benicia-Martinez New Bridge Project 151422SWR02SR6292. NMFS, Southwest Region, Santa Rosa, CA.

NMFS. 2007. Endangered Species Act Section 7 Formal Consultation and Magnuson-Stevens Fishery Conservation and Management Act Essential Fish Habitat Consultation for the Catherine Creek State Diversion Fish Passage Project, Upper Grande Ronde Subbasin, Catherine Creek/Brinker Creek Subwatershed (HUC#: 170601040505), Union County, Oregon. Portland, OR. 35 pp.

Oregon Department of Fish and Wildlife (ODFW). 2005. 2005 Oregon Native Fish Status Report, Volume II Assessment Methods and Population Results. ODFW Fish Division. Salem, OR. 568 pp.

Redding, J. M., C. B. Schreck, and F. H. Everest. 1987. Physiological effects on coho salmon and steelhead of exposure to suspended solids. Transactions of the American Fisheries Society 116:737-744.

Servizi, J. A., and D. W. Martens. 1992. Sublethal responses of coho salmon (*Oncorhynchus kisutch*) to suspended sediments. *Canadian Journal of Aquatic Sciences* 49:1389-1395.

StreamNet. 2011. Available: <http://wdfw.wa.gov/mapping/salmonscape/>. Accessed: February 4, 2011.

Stober, Q. J., B. D. Ross, C. L Melby, P. A. Dinnel, T. H. Jagielo, and E. O. Salo. 1981. Effects of suspended sediment on coho and Chinook salmon in the Toutle and Cowlitz Rivers. FRI-UW-8124, Fisheries Research Institute, University of Washington, Seattle, Washington.

Thalheimer, E. 2000. Construction noise control program and mitigation strategy for the Central Arterial Tunnel Project. Noise Control Engineering Journal 48(5), September 2000, pp. 157-165.

U.S. Fish and Wildlife Service. 1998. A Framework to Assist in Making Endangered Species Act Determinations of Effect for Individual or Grouped Actions at the Bull Trout Subpopulation Watershed Scale. 49 pp.

U.S. Fish & Wildlife Service. 2002. Recovery Plan for Howell's Spectacular Thelypody (*Thelypodium howellii* ssp. *spectabilis*). U.S. Fish and Wildlife Service, Portland, OR. 47pp.

Appendix A

Project Design Plan Sheets

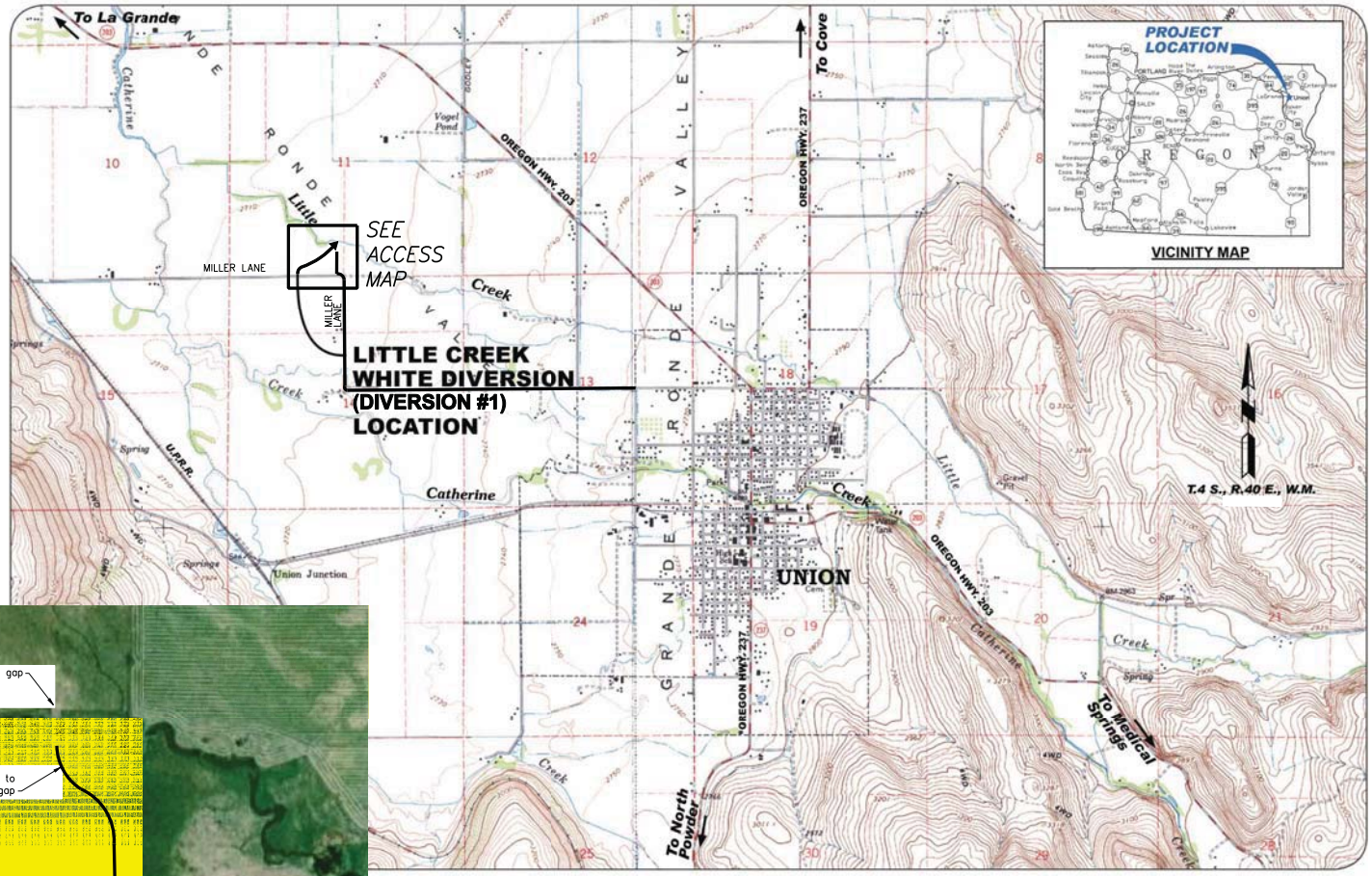

LOCATION MAP

ACCESS MAP

SHEET INDEX	
Sheet 1	Title Sheet
Sheet 2	General Notes, Legend, Abbreviations, and Demolition Details
Sheet 3	Site Plan
Sheet 4	Diversion Structure and Fishway Plan and Profile
Sheet 5	Diversion Structure and Fishway Sections
Sheet 6	Diversion Structure and Fishway Details
Sheet 7	Diversion Structure and Fishway Details
Sheet 8	Stream Profile, Sections, and Alignment Info

95% DESIGN

RECLAMATION
Managing Water in the West

PRELIMINARY NOT FOR CONSTRUCTION

CH2MHILL

CONTRACTOR DRAWING NO _____

ALWAYS THINK SAFETY

U.S. DEPARTMENT OF THE INTERIOR
BUREAU OF RECLAMATION
COLUMBIA, SNAKE RIVER SALMON RECOVERY PROGRAM
GRANDE RONDE RIVER BASIN, OREGON

DIVERSION AND FISH PASSAGE IMPROVEMENTS AT LITTLE CREEK DIVERSION #1

GENERAL
TITLE SHEET

REV NO

DESIGNED
DRAWN CONTRACTOR
CHECKED
TECH. ACCEPTANCE NAME - TITLE
ACCEPTED NAME - TITLE
BOISE, ID 2011-03

TITLE SHEET

XXX-XXX-XXXX

SHEET 1 OF 8

DATE AND TIME PLOTTED
MARCH 23, 2011
PLOTTED BY
LWATS

CAD SYSTEM
AutoCAD 2008
CAD FILENAME
Cover.DWG

GENERAL NOTES

1. All components of the contract documents shall fully apply to the work whether specifically referenced in the drawings or not.
2. Stationing, distances, and lengths shown on the drawings are based on horizontal measurements along the stream centerline. Cross sections, crossing details, and references to left (l) and right (r) on the drawings assume looking in the direction of increasing station along stream centerline alignment (facing upstream).
3. All dimensions, including, but not limited to, elevations, stations, and distances are in standard english units.
4. Any discrepancies found between the drawings and actual site conditions; or any inconsistencies or ambiguities between the drawings and other components of the contract documents shall be immediately reported in writing to the Engineer. The Engineer will promptly correct inconsistencies or ambiguities in writing. Work done by the Contractor involving such discrepancies without a written report and response from the Engineer shall be done at the Contractor's sole risk and expense.
5. Contractor shall not disturb or destroy any existing survey monuments or benchmarks. Any benchmarks disturbed or destroyed by the Contractor shall be replaced to the Engineer's satisfaction at the Contractor's sole expense.
6. Existing utilities are not shown on the drawings. utility location and protection is the responsibility of the Contractor. The Contractor shall be responsible for verifying the exact type, owner, location, and elevation of all buried and overhead utilities, and making necessary contact with and prior notification to utility owners. It is the Contractor's responsibility to perform the work in a safe manner and in accordance with any requirements set forth by the utility owner and applicable laws and regulations.
7. Contractor is advised that north arrows and orientation of plan view sheets vary to allow for left-to-right stationing and stationing in the upstream direction.
8. Contractor shall ensure that operation of existing irrigation and livestock watering are continuous during construction.
9. If applicable, construction easements shall not be used in any manner that will cause permanent damage to the property. Descriptions of the easements acquired for the work will be on file at the office of the Owner. Contractor shall comply with all provisions of the easement agreements.
10. Fencing the work area for protection of work and property and public safety shall be in accordance with the specifications.
11. Contractor shall keep all construction activities within the construction limits and any temporary construction or permanent easements obtained for this project, if applicable. this includes, but is not limited to, vehicles and equipment, limits of excavation, stockpiled excavated and imported material, backfill material, streambed material, and weir material. If the Contractor requires additional construction easements, it is the Contractor's responsibility to obtain such easements from individual property owners and bear all associated costs.
12. Unless otherwise indicated on the drawings or specifications, all existing items including, but not limited to, structures, improvements, groundwater wells, signs, fences, gates, curbs, pavement, bridges, utilities, irrigation pipelines and ditches, etc. shall be protected by the Contractor. If such items are damaged or must be removed or modified to facilitate construction, Contractor shall first notify the Owner and then replace the items to a like or better condition at Contractor's expense to satisfaction of owner of facilities.
13. Requirements related to the protection and/or removal of trees, vegetation, and structures within the work area are detailed in the specifications.
14. Contractor is solely responsible for determining the excavation limits needed to complete the work in conformance with local, state and federal codes governing shoring, sheeting, bracing of excavations and trenches, and for protection and safety of the workers and other construction related personnel.
15. Excavation shall meet the requirements of OSHA 29 CFR Part 1926, Subpart P, Excavations. Actual slopes shall not exceed the maximum allowable slopes (Subpart P, Appendix B).
16. Horizontal datum is NAD83/91. Horizontal coordinates shown herein are Oregon state plane coordinate system, North zone, International feet.
17. Vertical datum is NAVD 88, feet.
18. Elevations given are to finish grade unless otherwise indicated.
19. Slope uniformly between contours and spot elevations shown.
20. The Contractor is responsible for producing, implementing, adhering to, and maintaining a Stormwater Pollution Prevention Plan in accordance with the regulations and guidelines set forth and subject to approval by the State of Oregon. Contractor shall implement and document any additional measures necessary to prevent any erosion or hazardous materials from leaving the site, discharging, being entrained, absorbed or otherwise entering surface waters, ground water or soils.
21. The Contractor shall be responsible for maintaining all temporary and permanent erosion control measures at all times. Maintenance of temporary and permanent erosion control measures shall be considered incidental.
22. The Contractor shall be held solely responsible for any NPDES or other applicable environmental permit violations and fines.

NOTE:
RECLAMATION NEEDS TO VERIFY INFORMATION FROM RECENT SURVEY.

LEGEND

1600	Existing grade contours
1600	Finish grade contours
X	Existing fence

ABBREVIATIONS

ACI	American Concrete Institute
approx	approximate
astm	american society of testing & materials
bm	benchmark
℄	centerline
cdf	controlled density fill
cfs	cubic feet per second
conc	concrete
cont	continuous
csbc	crushed surfacing base course
cstc	crushed surfacing top course
cy	cubic yard
e	east
ef	each face
el	elevation
exst	existing
fg	finished grade
g	grade
h	horizontal
l	length
lf	linear foot
ls	lump sum
max	maximum
min	minimum
n	north
no.	number
nts	not to scale
oc	on center
ohw	ordinary high water
psi	pounds per square inch
pt	point
q	flow
row	right-of-way
s	south
sf	square foot
spec	specification
sst	stainless steel
sta	station
sy	square yard
t & b	top & bottom
typ	typical
USWCD	Union Soil & Water Conservation District
vc	vertical curve
vpc	vertical point of curve
vpi	vertical point of intersection
vpt	vertical point of tangent
w	west
wse	water surface elevation

Notes:
1. Structure to be removed in its entirety.
2. Total structure length is approximately 36 feet (including abutments).
3. Width between abutments is approximately 24 feet (additional dimensions below).
4. Walls are approximately 12 inches thick.
5. Demolished materials to be disposed of offsite at an approved location.

LITTLE CREEK DIVERSION #1 – WINTER

LITTLE CREEK DIVERSION #1 – SUMMER

DEMOLITION OF EXISTING STRUCTURE

95% DESIGN

RECLAMATION
Managing Water in the West

PRELIMINARY NOT FOR CONSTRUCTION

CH2MHILL

CONTRACTOR DRAWING NO _____

ALWAYS THINK SAFETY

U.S. DEPARTMENT OF THE INTERIOR
BUREAU OF RECLAMATION
COLUMBIA, SNAKE, AND WILLAMETTE RECOVERY PROGRAM
GRANDE RONDE RIVER BASIN, OREGON

DIVERSION AND FISH PASSAGE IMPROVEMENTS
AT LITTLE CREEK DIVERSION #1

NOTES, LEGEND, ABBREVIATIONS, AND DEMOLITION DETAILS

REV NO

DESIGNED CONTRACTOR
DRAWN
CHECKED
TECH. ACCEPTANCE NAME - TITLE
ACCEPTED NAME - TITLE
BOISE, ID 2011-03

GENERAL NOTES, LEGEND, ABBREVIATIONS, AND DEMOLITION DETAILS

XXX-XXX-XXXX

SHEET 2 OF 8

DATE AND TIME PLOTTED
MARCH 21, 2010
PLOTTED BY
LIWITS

CAD SYSTEM
AutoCAD 2008
CAD FILENAME
NOTES.DWG

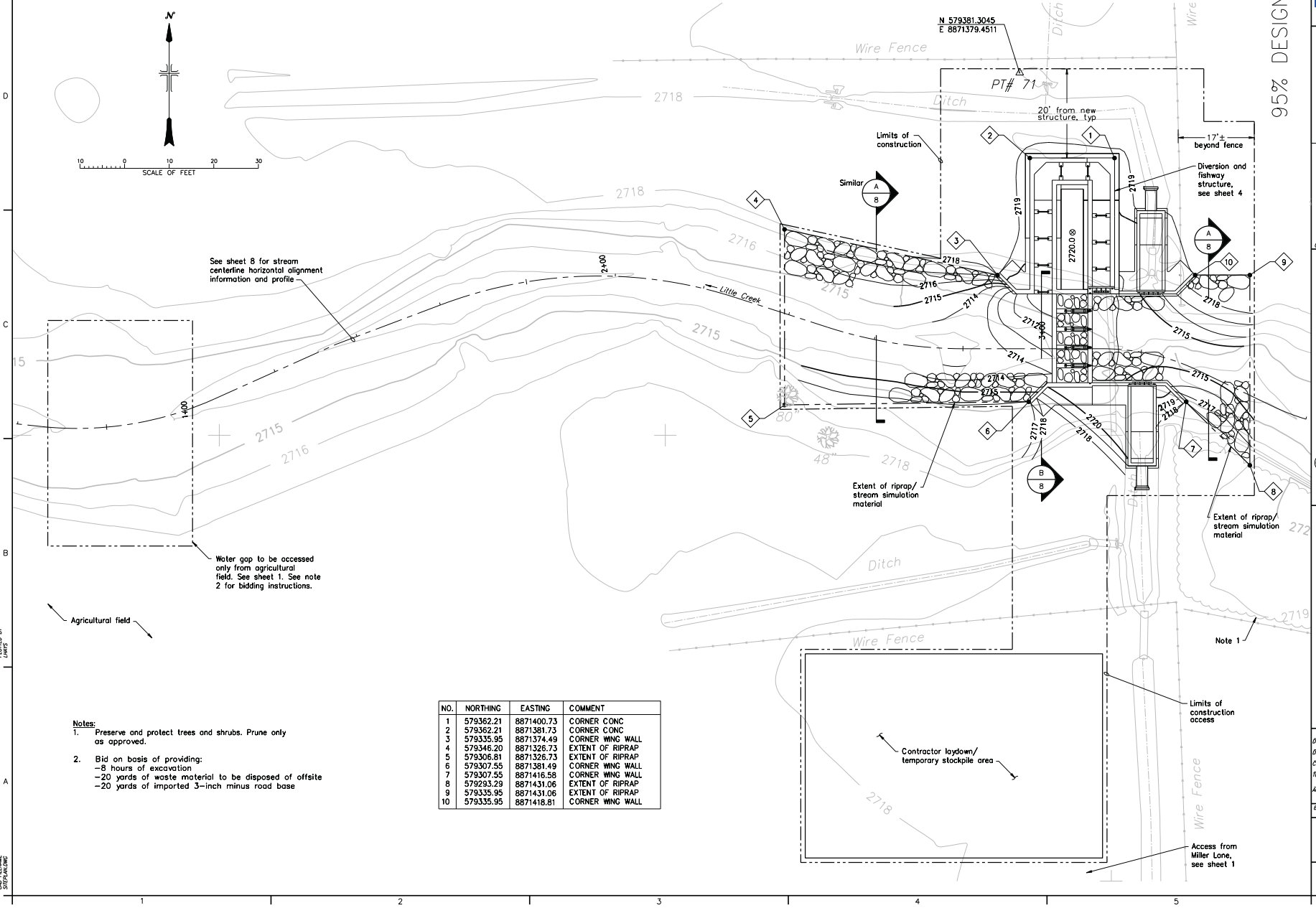

Notes:

1. Preserve and protect trees and shrubs. Prune only as approved.
2. Bid on basis of providing:
   - 8 hours of excavation
   - 20 yards of waste material to be disposed of offsite
   - 20 yards of imported 3-inch minus road base

NO.	NORTHING	EASTING	COMMENT
1	579362.21	8871400.73	CORNER CONC
2	579362.21	8871381.73	CORNER CONC
3	579335.95	8871374.49	CORNER WING WALL
4	579346.20	8871326.73	EXTENT OF RIPRAP
5	579306.81	8871326.73	EXTENT OF RIPRAP
6	579307.55	8871381.49	CORNER WING WALL
7	579307.55	8871416.58	CORNER WING WALL
8	579293.29	8871431.06	EXTENT OF RIPRAP
9	579335.95	8871431.06	EXTENT OF RIPRAP
10	579335.95	8871418.81	CORNER WING WALL

RECLAMATION
Managing Water in the West

PRELIMINARY NOT FOR CONSTRUCTION

CH2MHILL

CONTRACTOR DRAWING NO

ALWAYS THINK SAFETY

U.S. DEPARTMENT OF THE INTERIOR
BUREAU OF RECLAMATION
COLUMBIA, SNAKE RIVER SALMON RECOVERY PROGRAM
GRANDE RONDE RIVER BASIN, OREGON

DIVERSION AND FISH PASSAGE IMPROVEMENTS
AT LITTLE CREEK DIVERSION #1

CIVIL
SITE PLAN

REV NO

DESIGNED
DRAWN CONTRACTOR
CHECKED
TECH. ACCEPTANCE NAME - TITLE
ACCEPTED NAME - TITLE
BOISE, ID 2011-03

SITE PLAN

XXX-XXX-XXXX

SHEET 3 OF 8

DATE AND TIME PLOTTED
MARCH 23, 2010
PLOTTED BY
LIMITS

CAD SYSTEM
AutoCAD 2008
CAD FILENAME
SITEPLAN.DWG

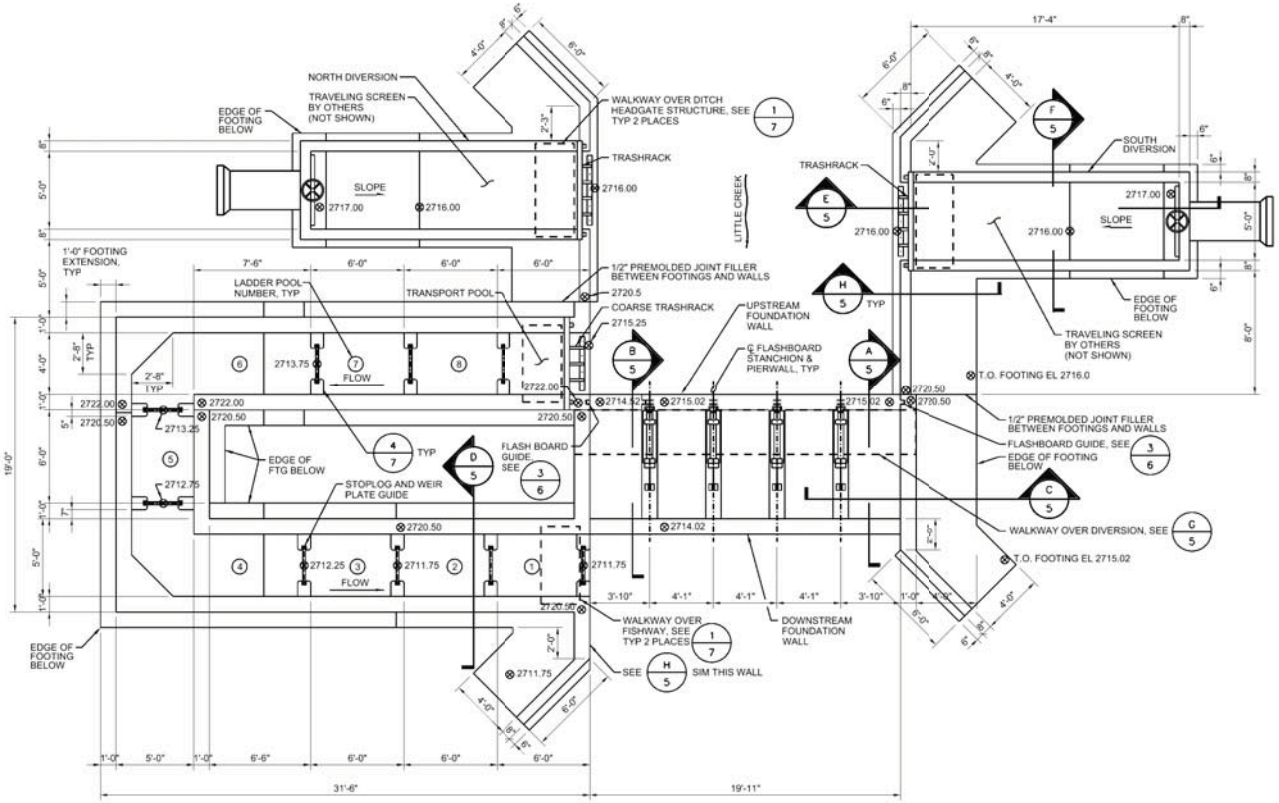

PLAN
1/4"=1'-0"

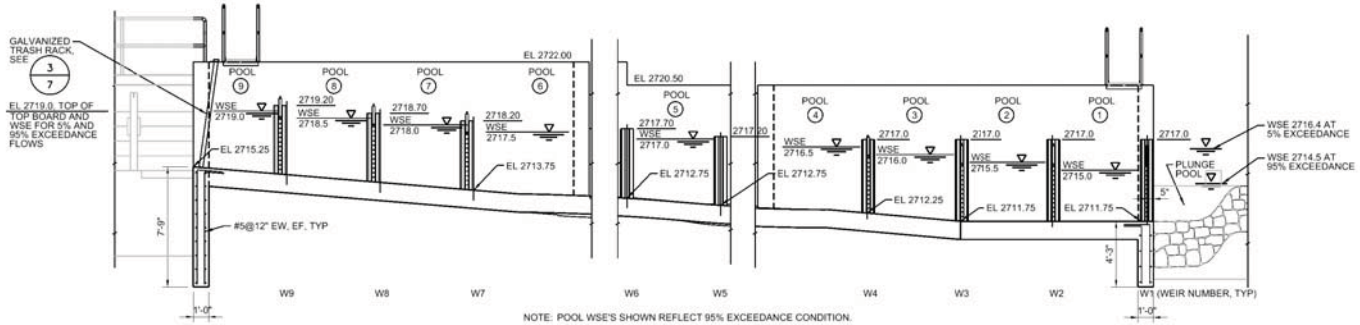

NOTE: POOL WSE'S SHOWN REFLECT 95% EXCEEDANCE CONDITION.

DEVELOPED PROFILE
1/4"=1'-0"

95% DESIGN

RECLAMATION
Managing Water in the West

PRELIMINARY NOT FOR CONSTRUCTION

CH2MHILL

CONTRACTOR DRAWING NO _____

ALWAYS THINK SAFETY

U.S. DEPARTMENT OF THE INTERIOR
BUREAU OF RECLAMATION
COLUMBIA SNAKE RIVER SALMON RECOVERY PROGRAM
GRANDE RONDE RIVER BASIN - OREGON

DIVERSION AND FISH PASSAGE IMPROVEMENTS
AT LITTLE CREEK DIVERSION #1

STRUCTURAL
DIVERSION STRUCTURE AND FISH LADDER PLAN

REV NO

DESIGNED CONTRACTOR
DRAWN
CHECKED
TECH. ACCEPTANCE NAME - TITLE
ACCEPTED NAME - TITLE
BOISE, ID 2010-09

DIVERSION STRUCTURE AND FISHWAY PLAN AND PROFILE

XXX-XXX-XXXX

SHEET 4 OF 8

DATE AND TIME PLOTTED
SEPTEMBER 2010 14:40
PLOTTED BY
CHMS

CAD SYSTEM
AUTODESK
AUTOCAD 2008
DRAWING1.DWG

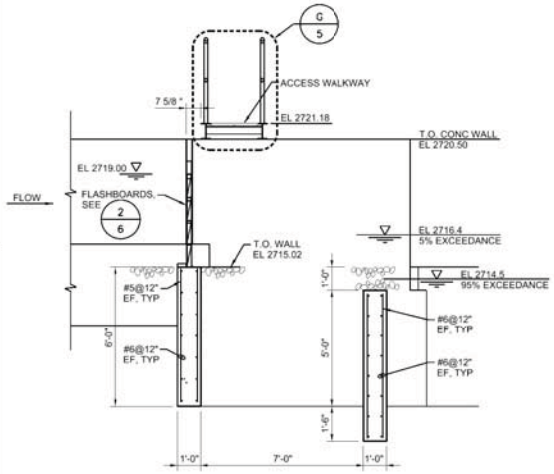

NOTE: WATER ELEVATIONS SHOWN ARE WITH FLASHBOARDS IN PLACE TO 2719.0.

A SECTION 3/8"=1'-0"

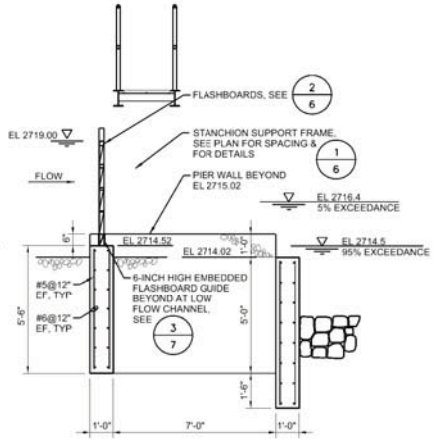

NOTE: WATER ELEVATIONS SHOWN ARE WITH FLASHBOARDS IN PLACE TO 2719.0.

B SECTION 3/8"=1'-0"

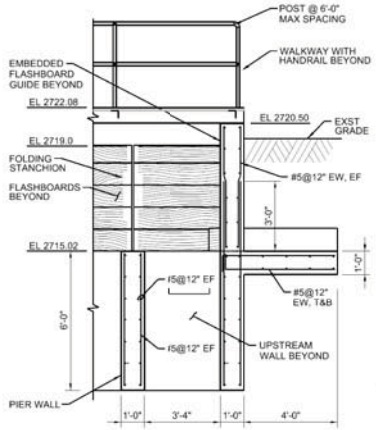

C SECTION 3/8"=1'-0"

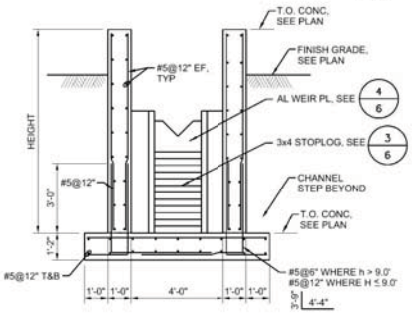

D SECTION 3/8"=1'-0"

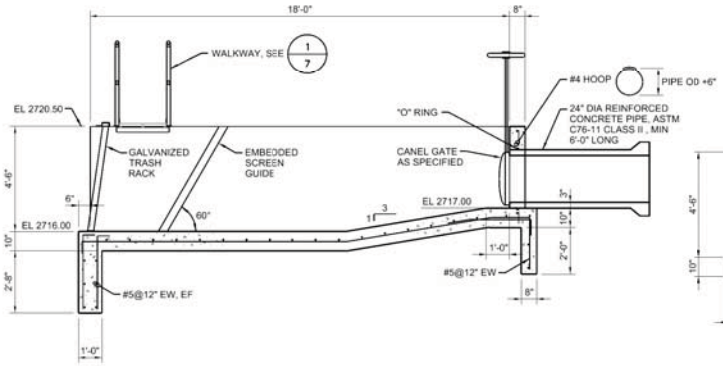

E SECTION 3/8"=1'-0"

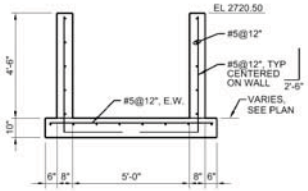

F SECTION 3/8"=1'-0"

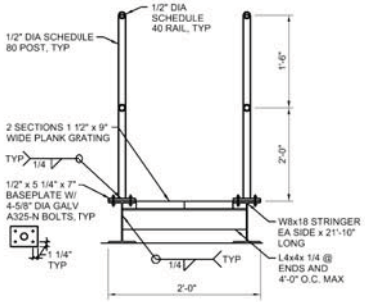

NOTE: HOT DIP GALVANIZE AFTER FABRICATION.

G SECTION 1"=1'-0"

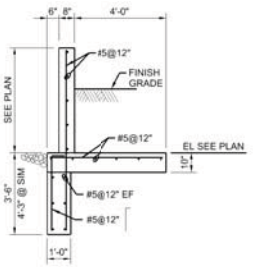

H SECTION 3/8"=1'-0"

95% DESIGN

RECLAMATION
Managing Water in the West

PRELIMINARY NOT FOR CONSTRUCTION

CH2MHILL

CONTRACTOR DRAWING NO _____

ALWAYS THINK SAFETY

U.S. DEPARTMENT OF THE INTERIOR
BUREAU OF RECLAMATION
COLUMBIA SNAKE RIVER SALMON RECOVERY PROGRAM
GRANDE RONDE RIVER BASIN - OREGON

DIVERSION AND FISH PASSAGE IMPROVEMENTS AT LITTLE CREEK DIVERSION #1

STRUCTURAL SECTIONS AND DETAILS

DESIGNED CONTRACTOR
DRAWN
CHECKED
TECH. ACCEPTANCE NAME - TITLE
ACCEPTED NAME - TITLE
BOISE, ID 2010-09

DIVERSION STRUCTURE AND FISHWAY SECTIONS

XXX-XXX-XXXX

SHEET 5 OF 8

DATE AND TIME PLOTTED 2010 14:40
PLOTTED BY DAYS

CAD SYSTEM AutoCAD 2006
AUTO TRUNK DRAWING1.DWG

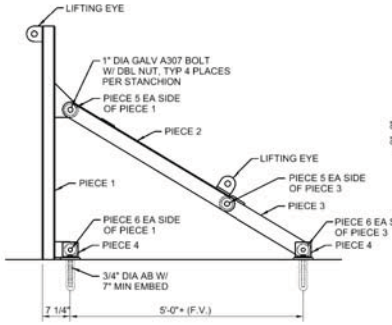

NOTES:
1. PIECES 1, 2, 3, 4 SHALL BE HOT DIP GALVANIZED AFTER FABRICATION.
2. PIECES 5 & 6 SHALL BE ULTRA HIGH MOLECULAR WEIGHT PLASTIC.

ASSEMBLY ELEVATION
3/4" = 1'-0"

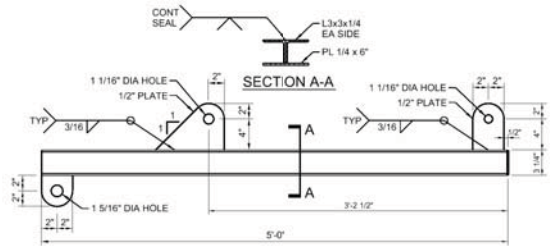

PIECE 1
1 1/2" = 1'-0"

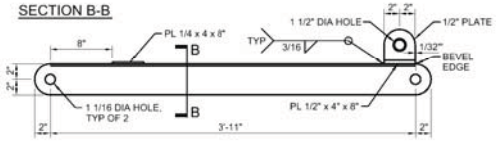

PIECE 2
1 1/2" = 1'-0"

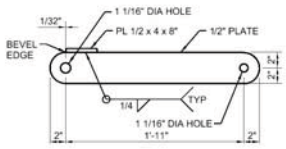

PIECE 3
1 1/2" = 1'-0"

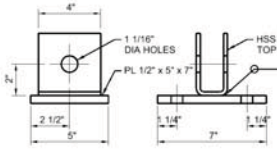

PIECE 4
3" = 1'-0"

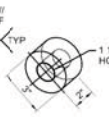

PIECE 5
3" = 1'-0"

PIECE 6
3" = 1'-0"

1 FLASHBOARD STANCHION
4 AS NOTED

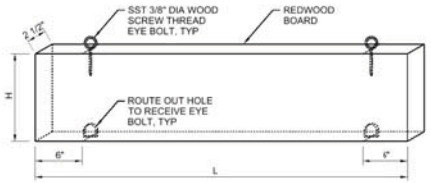

SCHEDULE			
LOCATION	LENGTH (L)	HEIGHT (H)	NUMBER OF PIECES
CHANNEL	4'-0"	11 1/2"	26
FISHWAY	2'-5"	3 1/2"	108

2 FLASHBOARD AND STOPLOG
4 1 1/2"=1'-0"

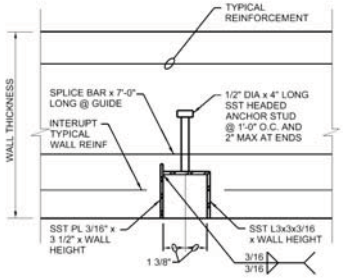

PLAN

3 FLASHBOARD AND STOPLOG GUIDE SLOT
4 3"=1'-0"

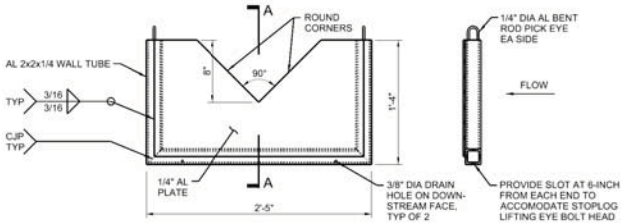

ELEVATION SECTION

NOTE: PROVIDE 10 UNITS

4 AL FISHWAY WEIR
4 1 1/2"=1'-0"

95% DESIGN

RECLAMATION
Managing Water in the West

PRELIMINARY NOT FOR CONSTRUCTION

CH2MHILL

CONTRACTOR DRAWING NO _____

ALWAYS THINK SAFETY

U.S. DEPARTMENT OF THE INTERIOR
BUREAU OF RECLAMATION
COLUMBIA SNAKE RIVER SALMON RECOVERY PROGRAM
GRANDE RONDE RIVER BASIN - OREGON

DIVERSION AND FISH PASSAGE IMPROVEMENTS AT LITTLE CREEK DIVERSION #1

STRUCTURAL SECTIONS AND DETAILS

REV NO

DESIGNED
DRAWN CONTRACTOR
CHECKED
TECH. ACCEPTANCE NAME - TITLE
ACCEPTED NAME - TITLE
BOISE, ID 2010-09

DIVERSION STRUCTURE AND FISHWAY DETAILS

XXX-XXX-XXXX

SHEET 6 OF 8

DATE AND TIME PLOTTED 09/09/2010 14:40
PLOTTED BY CHAYS

CAD SYSTEM AutoCAD 2004
AUTOCAD DRAWING

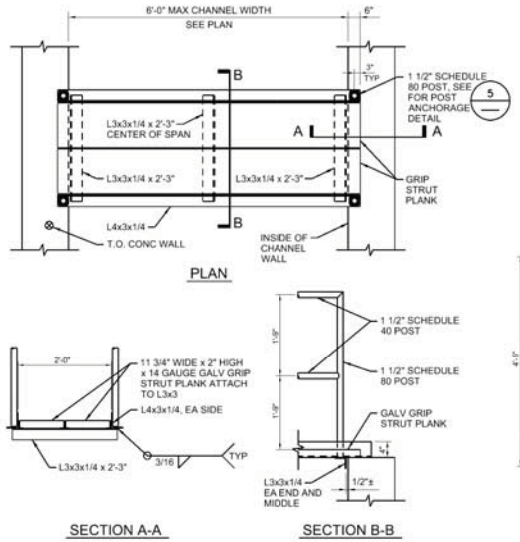

NOTE: HOT DIP GALVANIZE AFTER FABRICATION

1 WALKWAY 3/8"=1'-0"

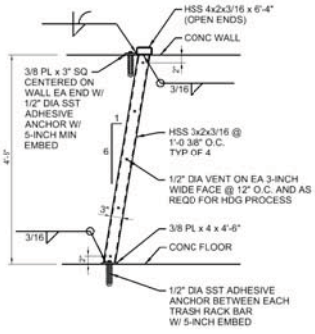

NOTE: HOT DIP GALVANIZE AFTER FABRICATION

2 TRASH RACK 3/8"=1'-0"

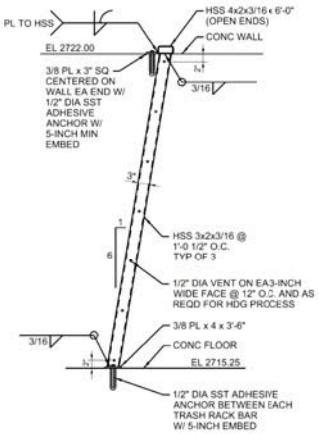

NOTE: HOT DIP GALVANIZE AFTER FABRICATION

3 TRASH RACK 3/8"=1'-0"

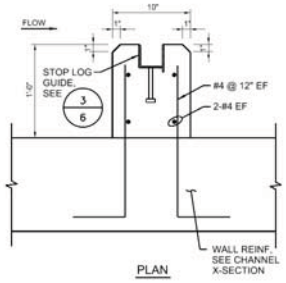

4 DETAIL 1 1/2"=1'-0"

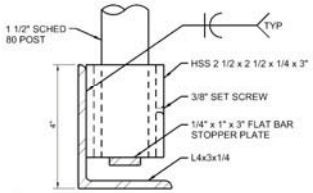

5 DETAIL 3"=1'-0"

95% DESIGN

RECLAMATION
Managing Water in the West

PRELIMINARY NOT FOR CONSTRUCTION

CH2MHILL

CONTRACTOR DRAWING NO _____

ALWAYS THINK SAFETY

U.S. DEPARTMENT OF THE INTERIOR
BUREAU OF RECLAMATION
COLUMBIA SNAKE RIVER SALMON RECOVERY PROGRAM
GRANDE RONDE RIVER BASIN - OREGON

DIVERSION AND FISH PASSAGE IMPROVEMENTS AT LITTLE CREEK DIVERSION #1

STRUCTURAL SECTIONS AND DETAILS

REV NO

DESIGNED
DRAWN CONTRACTOR
CHECKED
TECH. ACCEPTANCE NAME - TITLE
ACCEPTED NAME - TITLE

BOISE, ID 2010-09

DIVERSION STRUCTURE AND FISHWAY DETAILS

XXX-XXX-XXXX

SHEET 7 OF 8

DATE AND TIME PLOTTED
SEPTEMBER 29, 2010 14:40
PLOTTED BY
CHAYS

CAD SYSTEM
AutoCAD Release
AUTO TRANSFORM
DRAWING1.DWG

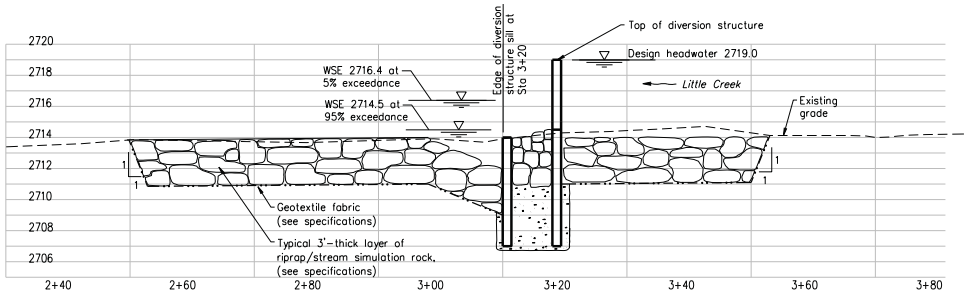

STREAM PROFILE

SCALE OF FEET HORIZONTAL (10 0 10 20 30)

SCALE OF FEET VERTICAL (4 0 4 8 12)

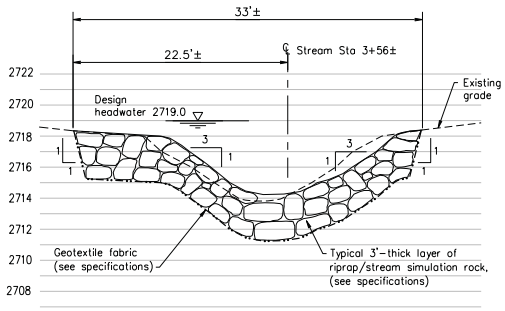

A SECTION

3

SCALE OF FEET HORIZONTAL (8 0 8 16 24)

SCALE OF FEET VERTICAL (4 0 4 8 12)

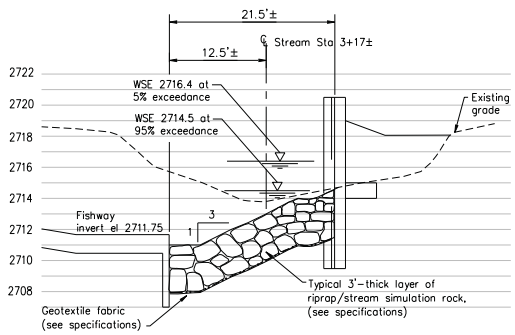

B SECTION

3

SCALE OF FEET HORIZONTAL (8 0 8 16 24)

SCALE OF FEET VERTICAL (4 0 4 8 12)

Element		STATION	NORTHING	EASTING
Element: Linear				
POB		0+55.16	579305.13	8871130.08
PC		0+85.50	579301.95	8871160.26
Tangent Direction:	S 83^59'18.16" E			
Tangent Length:		30.35		
Element: Circular				
PC		0+85.50	579301.95	8871160.26
PI		1+05.75	579299.83	8871180.40
PT		1+25.06	579308.13	8871198.86
Radius:		75.00		
Delta:	30^12'52.43" Left			
Degree of Curvature Arc :	76^23'39.74"			
Length:		39.55		
Tangent:		20.25		
Chord:		39.09		
Element: Linear				
PT		1+25.06	579308.13	8871198.86
PI		1+54.96	579320.39	8871226.14
Tangent Direction:	N 65^47'49.41" E			
Tangent Length:		29.90		
Element: Linear				
PI		1+54.96	579320.39	8871226.14
PC		1+80.20	579329.29	8871249.76
Tangent Direction:	N 69^20'51.03" E			
Tangent Length:		25.24		
Element: Circular				
PC		1+80.20	579329.29	8871249.76
PI		2+15.15	579341.62	8871282.46
PT		2+47.44	579330.89	8871315.72
Radius:		100.00		
Delta:	38^31'36.41" Right			
Degree of Curvature Arc :	57^17'44.81"			
Length:		67.24		
Tangent:		34.95		
Chord:		65.98		
Element: Linear				
PT		2+47.44	579330.89	8871315.72
PC		2+69.11	579324.24	8871336.34
Tangent Direction:	S 72^07'32.56" E			
Tangent Length:		21.66		
Element: Circular				
PC		2+69.11	579324.24	8871336.34
PI		2+84.83	579319.41	8871351.31
PT		3+00.30	579319.41	8871367.03
Radius:		100.00		
Delta:	17^52'27.44" Left			
Degree of Curvature Arc :	57^17'44.81"			
Length:		31.20		
Tangent:		15.73		
Chord:		31.07		
Element: Linear				
PT		3+00.30	579319.41	8871367.03
PC		3+31.20	579319.41	8871397.93
Tangent Direction:	N 90^00'00.00" E			
Tangent Length:		30.89		
Element: Circular				
PC		3+31.20	579319.41	8871397.93
PI		3+42.59	579319.41	8871409.32
PT		3+53.61	579314.48	8871419.59
Radius:		50.00		
Delta:	25^40'46.86" Right			
Degree of Curvature Arc :	114^35'29.61"			
Length:		22.41		
Tangent:		11.40		
Chord:		22.22		
Element: Linear				
PT		3+53.61	579314.48	8871419.59
PC		3+72.05	579306.48	8871436.21
Tangent Direction:	S 64^19'13.14" E			
Tangent Length:		18.44		
Element: Circular				
PC		3+72.05	579306.48	8871436.21
PI		3+87.40	579299.83	8871450.05
PT		4+01.83	579302.09	8871465.23
Radius:		50.00		
Delta:	34^08'02.52" Left			
Degree of Curvature Arc :	114^35'29.61"			
Length:		29.79		
Tangent:		15.35		
Chord:		29.35		
Element: Linear				
PT		4+01.83	579302.09	8871465.23
POE		4+13.92	579303.87	8871477.19
Tangent Direction:	N 81^32'44.34" E			
Tangent Length:		12.09		

LITTLE CREEK DESIGN CENTERLINE ALIGNMENT

95% DESIGN

RECLAMATION
Managing Water in the West

PRELIMINARY NOT FOR CONSTRUCTION

CH2MHILL

CONTRACTOR DRAWING NO _____

ALWAYS THINK SAFETY

U.S. DEPARTMENT OF THE INTERIOR
BUREAU OF RECLAMATION
COLUMBIA, SNAKE RIVER AND RECOVERY PROGRAM
GRANDE RONDE RIVER BASIN, OREGON

DIVERSION AND FISH PASSAGE IMPROVEMENTS
AT LITTLE CREEK DIVERSION #1
CWI
STREAM PROFILE, SECTIONS, AND ALIGNMENT INFO

REV NO

DESIGNED
DRAWN CONTRACTOR
CHECKED
TECH. ACCEPTANCE NAME - TITLE
ACCEPTED NAME - TITLE

BOISE, ID 2011-03

STREAM PROFILE, SECTIONS, AND ALIGNMENT INFO

XXX-XXX-XXXX

SHEET 8 OF 8

DATE AND TIME PLOTTED
MARCH 23, 2010
PLOTTED BY
LWHS

CAD SYSTEM
AutoCAD 2008
CAD FILENAME
STDRAWING

Appendix B

Species Lists from the USFWS and the NMFS

FEDERALLY LISTED, PROPOSED, CANDIDATE SPECIES
AND SPECIES OF CONCERN
UNDER THE JURISDICTION OF THE FISH AND WILDLIFE SERVICE
WHICH MAY OCCUR WITHIN UNION COUNTY, OREGON

LISTED SPECIES

Mammals

Terrestrial:

Gray wolf	*Canis lupus*	E
(Conterminous USA distinct population segment and Rocky Mountain distinct population segment)		

Fish

Inland:

Bull trout	*Salvelinus confluentus*	CH T

Plants

Howell's spectacular thelypody	*Thelypodium howellii ssp. spectabilis*	T

PROPOSED SPECIES

None

No Proposed Endangered Species	PE
No Proposed Threatened Species	PT

CANDIDATE SPECIES

Mammals

North American wolverine	*Gulo gulo luscus*

Birds

Greater sage-grouse	*Centrocercus urophasianus*

SPECIES OF CONCERN

Mammals

Townsend's western big-eared bat	*Corynorhinus townsendii townsendii*
Spotted bat	*Euderma maculatum*
Silver-haired bat	*Lasionycteris noctivagans*
Small-footed myotis bat	*Myotis ciliolabrum*
Long-eared myotis bat	*Myotis evotis*
Fringed myotis bat	*Myotis thysanodes*
Long-legged myotis bat	*Myotis volans*
Yuma myotis bat	*Myotis yumanensis*
Preble's shrew	*Sorex preblei*

Birds

Northern goshawk	*Accipiter gentilis*
Western burrowing owl	*Athene cunicularia hypugaea*
Upland sandpiper	*Bartramia longicauda*

Ferruginous hawk	*Buteo regalis*
Olive-sided flycatcher	*Contopus cooperi*
Willow flycatcher	*Empidonax traillii adastus*
Yellow-breasted chat	*Icteria virens*
Lewis' woodpecker	*Melanerpes lewis*
Mountain quail	*Oreortyx pictus*
White-headed woodpecker	*PIcoides albolarvatus*

Reptiles and Amphibians

Rocky Mountain tailed frog	*Ascaphus montanus*
Northern sagebrush lizard	*Sceloporus graciosus graciosus*

Fish

Pacific lamprey	*Lampetra tridentata*

Plants

Mountain grape fern	*Botrychium montanum*
Twin-spike moonwort	*Botrychium paradoxum*
Stalked moonwort	*Botrychium pedunculosum*
Fraternal paintbrush	*Castilleja fraterna*
Hazel's prickly-phlox	*Leptodactylon pungens ssp. hazeliae*
Lleast phacelia	*Phacelia minutissima*
Oregon semaphore grass	*Pleuropogon oregonus*
Douglas' clover	*Trifolium douglasii*

DELISTED SPECIES

Birds

American Peregrine falcon	*Falco peregrinus anatum*
Bald eagle	*Haliaeetus leucocephalus*

Definitions:

Listed Species: An endangered species is one that is in danger of extinction throughout all or a significant portion of its range. A threatened species is one that is likely to become endangered in the foreseeable future.

Proposed Species: Taxa for which the Fish and Wildlife Service or National Marine Fisheries Service has published a proposal to list as endangered or threatened in the Federal Register.

Candidate Species: Taxa for which the Fish and Wildlife Service has sufficient biological information to support a proposal to list as endangered or threatened.

Species of Concern: Taxa whose conservation status is of concern to the U.S. Fish and Wildlife Service (many previously known as Category 2 candidates), but for which further information is still needed. Such species receive no legal protection and use of the term does not necessarily imply that a species will eventually be proposed for listing.

Delisted Species: A species that has been removed from the Federal list of endangered and threatened wildlife and plants.

FEDERALLY LISTED, PROPOSED, CANDIDATE SPECIES AND SPECIES OF CONCERN UNDER THE JURISDICTION OF THE FISH AND WILDLIFE SERVICE WHICH MAY OCCUR WITHIN UNION COUNTY, OREGON

Key:

E	Endangered
T	Threatened
CH	Critical Habitat has been designated for this species
PE	Proposed Endangered
PT	Proposed Threatened
PCH	Critical Habitat has been proposed for this species

Notes:

Marine & Anadromous Species: Please consult the National Marine Fisheries Service (NMFS) (http://www.nmfs.noaa.gov/pr/species/) for marine and anadromous species. The National Marine Fisheries Service (NMFS) manages mostly marine and anadromous species, while the U.S. Fish and Wildlife Service manages the remainder of the listed species, mostly terrestrial and freshwater species.

Marine Turtle Conservation and Management: All six species of sea turtles occurring in the U.S. are protected under the Endangered Species Act of 1973. In 1977, NOAA Fisheries and the U.S. Fish and Wildlife Service signed a Memorandum of Understanding to jointly administer the Endangered Species Act with respect to marine turtles. NOAA Fisheries has the lead responsibility for the conservation and recovery of sea turtles in the marine environment and the U.S. Fish and Wildlife Service has the lead for the conservation and recovery of sea turtles on nesting beaches. For more information, see the NOAA Fisheries webpage on sea turtles http://www.nmfs.noaa.gov/pr/species/turtles/.

Gray Wolf: On February 27, 2008, the Service published a final rule that established a distinct population segment of the gray wolf (*Canis lupis*) in the northern Rocky Mountains (which includes a portion of Eastern Oregon, east of the centerline of Highway 395 and Highway 78 north of Burns Junction and that portion of Oregon east of the centerline of Highway 95 south of Burns Junction). Any wolves found west of this line in Oregon belong to the conterminous USA population [see 73 FR 10514]. Gray wolves in Oregon are State-listed as endangered, regardless of location.

Endangered Species Act Status of West Coast Salmon & Steelhead

(Updated July 1, 2009)

Species[1]			*Current Endangered Species Act Listing Status*[2]	*ESA Listing Actions Under Review*
Sockeye Salmon (*Oncorhynchus nerka*)	1	Snake River	***Endangered***	
	2	Ozette Lake	***Threatened***	
	3	Baker River	*Not Warranted*	
	4	Okanogan River	*Not Warranted*	
	5	Lake Wenatchee	*Not Warranted*	
	6	Quinalt Lake	*Not Warranted*	
	7	Lake Pleasant	*Not Warranted*	
Chinook Salmon (*O. tshawytscha*)	8	Sacramento River Winter-run	***Endangered***	
	9	Upper Columbia River Spring-run	***Endangered***	
	10	Snake River Spring/Summer-run	***Threatened***	
	11	Snake River Fall-run	***Threatened***	
	12	Puget Sound	***Threatened***	
	13	Lower Columbia River	***Threatened***	
	14	Upper Willamette River	***Threatened***	
	15	Central Valley Spring-run	***Threatened***	
	16	California Coastal	***Threatened***	
	17	Central Valley Fall and Late Fall-run	***Species of Concern***	
	18	Upper Klamath-Trinity Rivers	*Not Warranted*	
	19	Oregon Coast	*Not Warranted*	
	20	Washington Coast	*Not Warranted*	
	21	Middle Columbia River spring-run	*Not Warranted*	
	22	Upper Columbia River summer/fall-run	*Not Warranted*	
	23	Southern Oregon and Northern California Coast	*Not Warranted*	
	24	Deschutes River summer/fall-run	*Not Warranted*	
Coho Salmon (*O. kisutch*)	25	Central California Coast	***Endangered***	
	26	Southern Oregon/Northern California	***Threatened***	
	27	Lower Columbia River	***Threatened***	• Critical habitat
	28	Oregon Coast	***Threatened***	
	29	Southwest Washington	*Undetermined*	
	30	Puget Sound/Strait of Georgia	***Species of Concern***	
	31	Olympic Peninsula	*Not Warranted*	
Chum Salmon (*O. keta*)	32	Hood Canal Summer-run	***Threatened***	
	33	Columbia River	***Threatened***	
	34	Puget Sound/Strait of Georgia	*Not Warranted*	
	35	Pacific Coast	*Not Warranted*	
Steelhead (*O. mykiss*)	36	Southern California	***Endangered***	
	37	Upper Columbia River	***Threatened***	
	38	Central California Coast	***Threatened***	
	39	South Central California Coast	***Threatened***	
	40	Snake River Basin	***Threatened***	
	41	Lower Columbia River	***Threatened***	
	42	California Central Valley	***Threatened***	
	43	Upper Willamette River	***Threatened***	
	44	Middle Columbia River	***Threatened***	
	45	Northern California	***Threatened***	
	46	Oregon Coast	***Species of Concern***	
	47	Southwest Washington	*Not Warranted*	
	48	Olympic Peninsula	*Not Warranted*	
	49	Puget Sound	***Threatened***	• Critical habitat
	50	Klamath Mountains Province	*Not Warranted*	
Pink Salmon (*O. gorbuscha*)	51	Even-year	*Not Warranted*	
	52	Odd-year	*Not Warranted*	

1 The ESA defines a "species" to include any distinct population segment of any species of vertebrate fish or wildlife. For Pacific salmon, NOAA Fisheries Service considers an evolutionarily significant unit, or "ESU," a "species" under the ESA. For Pacific steelhead, NOAA Fisheries Service has delineated distinct population segments (DPSs) for consideration as "species" under the ESA.

Appendix C

Species Descriptions

APPENDIX C – SPECIES DESCRIPTIONS
LITTLE CREEK DIVERSION NO. 1
FISH PASSAGE PROJECT

April 2011

ICF INTERNATIONAL

Table of Contents

Chapter 1. Plants 3

1.1. Howell's Spectacular Thelypody (*Thelypodium howellii* spp. *spectabilis*) 3

1.1.1. Status 3

1.1.2. Habitat Requirements 3

1.1.3. Critical Habitat 4

Chapter 2. Fish 5

2.1. Bull Trout (*Salvelinus confluentus*) 5

2.1.1. Status 5

2.1.2. Habitat Requirements 6

2.1.3. Designated Critical Habitat 8

2.2. Chinook Salmon (*Oncorhynchus tshawytscha*) 9

2.2.1. Status 9

2.2.2. Habitat Requirements 9

2.2.3. Designated Critical Habitat 10

2.3. Steelhead (*Oncorhynchus mykiss*) 11

2.3.1. Status 11

2.3.2. Habitat Requirements 11

2.3.3. Designated Critical Habitat 14

Chapter 3. References 17

Chapter 1. Plants

1.1. Howell's Spectacular Thelypody (*Thelypodium howellii* spp. *spectabilis*)

1.1.1. Status

Howell's spectacular thelypody *(Thelypodium howllii* spp. *spectabilis)* was listed as a threatened species, without critical habitat, on May 26, 1999 (64 FR 28393).

Historically, Howell's spectacular thelypody was reported from the Baker-Powder River Valley in Baker and Union County, Oregon as well as the Willow Creek Valley near Ironside in Malheur County. From 1969 to 1980, Thelypody was thought to have been extinct, when it was rediscovered by Oregon Natural Heritage Program botanist James Kagan (USFWS 2002). Howell's spectacular thelypody is currently known from only five populations (11 sites) in Baker and Union Counties (USFWS 2002).

Threats to Howell's spectacular thelypody include urban and agricultural development, livestock grazing, hydrological alterations, non-native species invasion, habitat fragmentation, fire suppression, herbicide and pesticide use, and road construction and maintenance (USFWS 2002).

1.1.2. Habitat Requirements

Howell's spectacular thelypody is a herbaceous biennial that occurs in mesic, alkaline habitats in the Baker-Powder River Valley region in northeast Oregon. Sites range from approximately 1,000 meters (3,000 feet) to 1,100 meters (3,300 feet) in elevation. The thelypody is threatened by a variety of factors including habitat

destruction and fragmentation from agricultural and urban development, seasonal grazing by domestic livestock, competition from non-native vegetation, and alterations of wetland hydrology (USFWS 2002).

Theylypody seems to thrive on sites that are ephemerally moist, and high spring water tables may be essential to the thelypody. Thelypody may be dependent on periodic spring flooding since it appears to colonize areas adjacent to streams that have flooded. If moisture conditions stay high later in the spring or summer, conditions can result that allow sedges and rushes to outcompete thelypody. Theylypody is found in and around woody shrubs, on knolls, and on seasonally moist saline terraces along the edge of wet meadow habitat between the knolls. These alkaline knolls and terraces were formed as a result of past water flow from meandering stream channels and periodic flood events (USFWS 2002).

1.1.3. Critical Habitat

Critical habitat has not been proposed or designated for Howell's spectacular thelypody.

Chapter 2. Fish

The status, habitat requirements, and life histories for each species are provided in this chapter, followed by a detailed description of the critical habitat designation for each ESU or DPS, when the critical habitat is relatively distinct to that ESU or DPS.

Designated critical habitat for Chinook salmon and steelhead was withdrawn in 2002 following legal action, then redesignated in 2005.

2.1. Bull Trout (*Salvelinus confluentus*)

2.1.1. Status

The Columbia River DPS was listed as threatened on June 10, 1998 (65 FR 31647).

Bull trout are threatened by habitat degradation and fragmentation from past and ongoing land management activities such as mining, road construction and maintenance, timber harvest, hydropower, water diversions and withdrawals, agriculture, and grazing. Bull trout are also threatened by interactions with introduced nonnative fishes such as brook trout (*Salvelinus fontinalis*) and lake trout (*Salvelinus namaycush*).

Bull trout are estimated to have occupied about 60% of the Columbia River basin, and presently occur in 45% of the estimated historical range (Quigley and Arbelbide 1997). Bull trout have declined in overall range and numbers of fish. Though still widespread, there have been numerous local extirpations reported throughout the Columbia River basin. Although some strongholds still exist, bull trout generally occur as isolated subpopulations in headwater lakes or tributaries where migratory fish have been lost.

2.1.2. Habitat Requirements

Bull trout exhibit resident and migratory life-history strategies through much of their current range (Rieman and McIntyre 1993). Resident bull trout complete their life cycles in the tributary streams in which they spawn and rear. Migratory bull trout spawn in tributary streams where juvenile fish rear from 1 to 4 years before migrating to either a lake (adfluvial), river (fluvial), or in certain coastal areas, to saltwater (anadromous), where maturity is reached in one of the three habitats (Fraley and Shepard 1989; Goetz 1989).

Bull trout have relatively specific habitat requirements compared to other salmonids (Rieman and McIntyre 1993). Habitat components that appear to influence bull trout distribution and abundance include water temperature, cover, channel form and stability, valley form, spawning and rearing substrates, and migratory corridors (Oliver 1979; Pratt 1984, 1992; Fraley and Shepard 1989; Goetz 1989; Hoelscher and Bjornn 1989, Howell and Buchanan 1992; Rieman and McIntyre 1993, 1995; Rich 1996; Watson and Hillman 1997). Watson and Hillman (1997) concluded that watersheds must have specific physical characteristics to provide the necessary habitat requirements for bull trout to successfully spawn and rear, and that the characteristics are not necessarily ubiquitous throughout watersheds in which bull trout occur. Because bull trout exhibit a patchy distribution, even in pristine habitats (Rieman and McIntyre 1993), they should not be expected to simultaneously occupy all available habitats (Rieman et al. 1997).

Bull trout are found primarily in colder streams, although individual fish are often found in larger river systems (Fraley and Shepard 1989; Rieman and McIntyre 1993, 1995; Buchanan and Gregory 1997; Rieman et al. 1997). Water temperature above 15°C (59°F) is believed to limit bull trout distribution, which partially explains their generally patchy distribution within a watershed (Fraley and Shepard 1989, Rieman and McIntyre 1995). Spawning areas are often associated with cold-water springs, groundwater infiltration, and the coldest streams in a given watershed (Pratt 1992; Rieman and McIntyre 1993; Rieman et al. 1997).

All life history stages of bull trout are closely associated with complex forms of cover, including large woody debris, undercut banks, boulders, and pools (Oliver 1979; Fraley and Shepard 1989; Goetz 1989; Hoelscher and Bjornn 1989; Pratt 1992; Thomas 1992; Rich 1996; Sexauer and James 1997; Watson and Hillman 1997). Jakober (1995) observed bull trout over-wintering in deep beaver ponds or pools containing complex large woody debris in the Bitterroot River drainage, Montana, and suggested that suitable winter habitat may be more restrictive than summer habitat. Maintaining bull trout populations requires high stream channel stability and relatively stable stream flows (Rieman and McIntyre 1993). Juvenile and adult bull trout frequently inhabit complex cover associated with side channels, stream margins, and pools (Sexauer and James 1997). These areas are sensitive to activities that

directly or indirectly affect stream channel stability and alter natural flow patterns. For example, altered stream flow in the fall may disrupt bull trout during the spawning period, and channel instability may decrease survival of eggs and young juveniles in the gravel during winter through spring (Fraley and Shepard 1989; Pratt 1992; Pratt and Huston 1993).

Preferred spawning habitat consists of low gradient stream reaches with loose, clean gravel (Fraley and Shepard 1989) and water temperatures of 5 to 9°C (41 to 48°F) during the late summer and early fall months (Goetz 1989). Pratt (1992) summarized information indicating that increases in fine sediments are related to reduced egg survival and emergence. High juvenile densities were observed in the Swan River, Montana, and its tributaries where there was a diverse cobble substrate and a low percentage of fine sediments (Shepard et al. 1984). Juvenile bull trout in four streams in central Washington occupied slow-moving water less than 0.5 meter per second (1.6 feet per second) over a variety of sand to boulder size substrates (Sexauer and James 1997).

The size and age of maturity for bull trout vary depending upon life-history strategy. Growth of resident fish is generally slower than migratory fish; resident fish tend to be smaller at maturity and less fecund (Fraley and Shepard 1989; Goetz 1989). Individuals normally reach sexual maturity in 4 to 7 years. Bull trout are known to live as long as 12 years. Repeat and alternate year spawning has been reported, although repeat spawning frequency and post-spawning mortality are not well known (Leathe and Graham 1982; Fraley and Shepard 1989; Pratt 1992; Rieman and McIntyre 1996).

Bull trout typically spawn from August to November during periods of decreasing water temperatures. However, adult migratory bull trout frequently begin spawning migrations as early as April, and have been known to move upstream as far as 250 kilometers (155 miles) to spawning grounds (Fraley and Shepard 1989). In the Blackfoot River, Montana, bull trout began migrations to spawning areas in response to increasing temperatures (Swanberg 1997). Temperatures during spawning generally range from 4 to 10°C (39 to 51°F), with redds often constructed in stream reaches fed by springs or near other sources of cold groundwater (Goetz 1989; Pratt 1992; Rieman and McIntyre 1996). Depending on water temperature, incubation is normally 100 to 145 days (Pratt 1992), and after hatching, juveniles remain in the substrate. Time from egg deposition to emergence may surpass 200 days. Fry normally emerge from early April through May depending upon water temperatures and increasing stream flows (Pratt 1992; Ratliff and Howell 1992).

Growth varies depending upon life-history strategy. Resident adults range from 150 to 300 millimeters [mm] (6 to 12 inches) total length and migratory adults commonly reach 600 mm (24 inches) or more (Pratt 1984; Goetz 1989).

Bull trout are opportunistic feeders with food habits primarily a function of size and life-history strategy. Resident and juvenile migratory bull trout prey on terrestrial and aquatic insects, macrozooplankton, amphipods, mysids, crayfish and small fish (Wyman 1975; Rieman and Lukens 1979 in Rieman and McIntyre 1993; Boag 1987; Goetz 1989; Donald and Alger 1993). Adult migratory bull trout are primarily piscivorous, feeding on fish such as trout, salmon, whitefish, yellow perch, and sculpin (Fraley and Shepard 1989; Donald and Alger 1993).

2.1.3. Designated Critical Habitat

Bull trout critical habitat was designated on September 26, 2005 (70 FR 56212), with the ruling taking effect October 26, 2005.

The lateral extent of bull trout critical habitat for streams is the width of the stream channel as defined by its ordinary high water mark (OHWM), as defined by the U.S. Army Corps of Engineers (Corps) in 33 Code of Federal Regulations (CFR) 329.11. In areas for which OHWM has not been defined pursuant to 33 CFR 329.11, the width of the stream channel is defined by its bankfull elevation. Bankfull elevation is the level at which water begins to leave the channel and move into the floodplain and is reached at a discharge which generally has a recurrence interval of 1 to 2 years on the annual flood series (70 FR 56212). Such an interval is commensurate with nearly all of the juvenile freshwater life phases of most salmon and steelhead ESUs. Therefore, it is reasonable to conclude that for an occupied stream reach this lateral extent is regularly “occupied.”

Adjacent floodplains are not designated as critical habitat. However, it should be recognized that the quality of aquatic habitat within stream channels is intrinsically related to the character of the floodplains and associated riparian zones, and human activities that occur outside the river channels can have demonstrable effects on physical and biological features of the aquatic environment (i.e., water quality and water temperature). In addition, human activities that occur within or adjacent to streams or stream reaches not designated as critical habitat, but that flow into stream designated as critical habitat can also have demonstrable effects on the physical and biological features within the streams that are identified as critical habitat (70 FR 56212).

Critical habitat includes the inshore extent of critical habitat for marine nearshore areas (the mean higher high water [MHHW] line), including tidally influenced freshwater heads of estuaries. This refers to the average of all the higher high-water heights of the two daily tidal levels. Adjacent shoreline riparian areas, bluffs, and uplands are not designated as critical habitat. However, it should be recognized that the quality of marine habitat along shorelines is intrinsically related to the character of these adjacent features, and human activities that occur outside of the MHHW line can have major effects on physical and biological features of the marine environment.

As with Pacific salmon and steelhead, critical habitat for bull trout is described in terms of Primary Constituent Elements (PCEs). The PCEs are comprised of those physical and biological components deemed essential for the conservation and recovery of the species, including: 1) space for individual and population growth and for normal behavior; 2) food, water, air, light minerals, or other nutritional or physiological requirements; 3) cover or shelter; 4) sites for breeding, reproduction, and rearing of offspring; and 4) habitats that are protected from disturbance or are representative of the historical geographical and ecological distribution of a species (70 FR 56212).

Maps of designated bull trout critical habitat are available in 70 FR 56212.

2.2. Chinook Salmon (*Oncorhynchus tshawytscha*)

2.2.1. Status

The Snake River Spring/Summer-run Chinook salmon ESU was listed as a threatened species on June 28, 2005 (70 FR 37160).

Threats to the Chinook salmon include watershed development, such as forest practices, urbanization, agricultural land use, mining, hydropower development and water manipulation and withdrawal. Over-fishing, artificial propagation and introduction of nonnative species have also affected Chinook salmon. Forest practices, mining, agricultural land use, urbanization, hydro power development and water withdrawal have resulted in increased sedimentation, altered flow regimes and channel morphology, decreased water quality and quantity, loss of riparian habitat, loss of large woody debris, loss of large woody debris recruitment, elevated water temperatures, decreased gravel recruitment, reduced pools and spawning and rearing areas, rerouted stream channels, degraded streambanks, and loss of estuarine rearing areas (Bishop and Morgan 1996; Myers et al. 1998). These changes have affected the spawning and rearing environment of Chinook salmon. Harvest, hatchery practices and the introduction of nonnative species have also impacted the expression of the varied life history strategies of Chinook salmon within these ESUs.

Within the Snake River Spring/Summer-run Chinook salmon ESU are 15 hatchery stocks considered essential to the recovery of the species, including Catherine Creek (70 FR 37177).

2.2.2. Habitat Requirements

The generalized life history of Pacific salmon involves incubation, hatching, and emergence in freshwater, migration to the ocean, and subsequent initiation of maturation and return to freshwater for completion of maturation and spawning (Myers et al. 1998). Chinook salmon exhibit two generalized freshwater life history

types, stream-type and ocean-type (Gilbert 1912). There is further life history variation within each type, which allows full utilization of freshwater, estuarine and ocean environments (Spence et al. 1996).

In order to complete these life history strategies successfully, Chinook salmon need access to freshwater, estuarine, coastal and open ocean environments. In these environments they require adequate water quantity, quality, temperature, and velocity; substrate, cover and shelter; food resources; riparian vegetation; space; and safe passage conditions. The range of ocean residence for Chinook salmon is from 1 to 6 years. A small proportion of yearling males, called jacks, mature in freshwater or return after 2 to 3 months in saltwater (Myers et al. 1998; Spence et al. 1996). In general, Chinook salmon spawn in small- to medium-sized rivers; however, they may also spawn in larger river systems such as the mainstem Columbia River (Spence et al. 1996).

Stream-type Chinook salmon (upper Columbia River spring ESU and Snake River spring/summer ESU), characteristic of spring fish (Spence et al. 1996), reside as fry or parr in freshwater for a year or more before migrating to sea. They perform extensive offshore oceanic migrations and return to their natal river during the spring and early summer, several months prior to spawning (Healey 1991). Stream-type Chinook salmon tend to enter freshwater as immature or “bright” fish, migrate far upriver, and use upper watersheds for spawning in late summer and early autumn (Myers et al. 1998). Stream-type juvenile Chinook salmon, exhibit downstream dispersal and utilize a variety of freshwater rearing environments during their 1 to 2 years of freshwater rearing before migration to the ocean (Meehan and Bjornn 1991). Stream-type juvenile Chinook salmon fry in streams feed on drift insects (Allen and Hassler 1986) but zooplankton are more heavily preyed on in main river systems and estuaries (Allen and Hassler 1986). As Chinook salmon grow, they move from shallow littoral habitats into deeper river channels and their prey base changes from shallow epibenthic prey to larger pelagic species (Allen and Hassler 1986). Cool, clean water, complex habitat diversity that provides pools, riffles, off-channel habitat, and undercut banks, large woody debris or boulder structures that provide cover and shelter from predation and storm events are important habitat elements. Riparian vegetation provides the following to Chinook salmon rearing: shade for temperature regulation, vegetation inputs for food resources, streambank stabilization from roots and large woody debris recruitment. Stream-type life history strategies may be adapted to watersheds or parts of watersheds that are more productive and less susceptible to dramatic changes in water flow, as the long rearing period requires more stable less degraded habitats (Miller and Brannon 1982; Healey 1991).

2.2.3. Designated Critical Habitat

On December 28, 1993, the National Marine Fisheries Service (NMFS) designated critical habitat for the Snake River Spring/Summer-run Chinook salmon ESU (58 FR

68543). Critical habitat was revised on October 25, 1999, to exclude areas upstream of Napias Creek Falls, in eastern-Idaho.

Critical habitat is comprised of four components, including: 1) spawning and juvenile rearing areas; 2) juvenile migration corridors; 3) areas for growth and development to adulthood, and; 4) adult migration corridors.

Critical habitat for Snake River spring/summer Chinook was designated to include river reaches presently or historically accessible (except reaches above impassable natural falls, and Dworshak and Hells Canyon Dams) to Snake River spring/summer Chinook salmon in the Columbia River from a straight line connecting the west end of the Clatsop jetty (south jetty, Oregon side) and the west end of the Peacock jetty (north jetty, Washington side) and including all Columbia River estuarine areas and river reaches proceeding upstream to the confluence of the Columbia and Snake Rivers; all Snake River reaches from the confluence of the Columbia River upstream to Hells Canyon Dam. Major river basins containing spawning and rearing habitat for this ESU comprise approximately 22,390 square miles in Idaho, Oregon and Washington.

2.3. Steelhead (*Oncorhynchus mykiss*)

2.3.1. Status

The Snake River Basin steelhead DPS was listed as a threatened species on January 5, 2006 (71 FR 834).

Threats to steelhead include grazing, water diversions, hydroelectric development, forestry and associated road building (Yee and Roelofs 1980; Platts 1981; Chamberlin 1982), contributing to habitat degradation (Busby et al. 1996), failure of natural stocks to replace themselves, genetic homogenization due to hatchery supplementation, and high harvest rates on steelhead smolts in rainbow trout fisheries.

2.3.2. Habitat Requirements

Steelhead (*O. mykiss*) exhibit a great diversity of life history patterns, and are phylogenetically and ecologically complex. Steelhead exhibit varying degrees of anadromy, differences in reproductive biology and plasticity of life history between generations (Busby et al. 1996). Different life history forms include anadromous and nonanadromous, winter or summer steelhead, inland or coastal groupings, and half-pounder strategies. Steelhead along with cutthroat trout can spawn more than once (iteroparity), whereas all other species of *Oncorhynchus* spawn once and then die (semelparity). North of Oregon, repeat spawning is relatively uncommon and more than two spawning migrations is rare. Iteroparity occurs predominantly in females

(Busby et al. 1996). Anadromous forms can spend up to 7 years in freshwater and three years in the ocean prior to their first spawning (Busby et al. 1996).

In North America, *O. mykiss* is split into two phylogenetic groups, inland and coastal (Busby et al. 1996). These two groups both occur in Washington, Oregon and British Columbia (Busby et al. 1996), and are separated in the Columbia and Fraser systems in the vicinity of the crest of the Cascade Mountains (Reisenbichler et al. 1992).

Coastal steelhead occur in a diverse array of populations in Puget Sound, coastal Washington and the lower Columbia River with modest genetic differences between populations (Busby et al. 1996). Inland steelhead are represented only by populations in the Columbia River and Fraser River basins, and consistent genetic differences have been found between populations in the Snake and Columbia rivers (Busby et al. 1996). Inland and coastal forms apply to both anadromous and nonanadromous forms, which means that rainbow trout east of the Cascades are genetically more similar to steelhead from east of the Cascades than they are to rainbow trout west of the Cascades (Busby et al. 1996). Large genetic differences between coastal and inland groups have been demonstrated for both anadromous and nonanadromous forms (Busby et al. 1996).

O. mykiss have two basic reproductive ecotypes, based on the state of their sexual maturity at river entry and the durations of the spawning migration (Burgner et al. 1992). These reproductive ecotypes are 1) stream maturing or summer steelhead, or 2) ocean maturing or winter steelhead (Busby et al. 1996). Summer steelhead enter fresh water from May to October in a sexually immature state, migrate upstream during the spring and summer, and hold in areas of protected cover such as deep pools, undercut banks, overhanging vegetation or large woody debris or boulder structures until they become sexually mature. These summer steelhead do not spawn until the following spring (Pauley et al. 1986), so they hold over the fall and winter in freshwater.

Inland steelhead from the Columbia River basin, and especially the Snake River basin are split into two groups, A- and B-run steelhead. This split is based on a bimodal migration of adult steelhead at Bonneville Dam and differences in age at return, and adult size (Busby et al. 1996). Adult A-run steelhead enter freshwater from June to August, and have predominantly spent only l year in the ocean before returning to spawn (Idaho Department of Fish and Game 1994). A-run steelhead occur throughout steelhead bearing streams in the Snake and Columbia river basins (Idaho Department of Fish and Game 1994). Adult B-run steelhead enter freshwater from late August to October, and have predominantly spent 2 years in the ocean before returning to spawn (Idaho Department of Fish and Game 1994). B-run steelhead are thought to reproduce only in the Clearwater, Mid-fork Salmon and South Fork Salmon rivers in Idaho (Idaho Department of Fish and Game 1994).

Winter steelhead enter their home stream in various stages of sexual maturation from November to April, and spawn within a few months of entering the river between late March and early May (Pauley et al. 1986). Winter steelhead are the more widespread of the two reproductive types. Coastal streams are dominated by winter steelhead, and there are only a few occurrences of inland winter steelhead populations (Busby et al. 1996).

Some basins have both summer and winter steelhead present. Where both occur, they are often separated by seasonal hydrologic barriers, such as waterfalls (Busby et al. 1996). It appears summer steelhead occur where habitat is not fully used by winter steelhead, and summer steelhead spawn further upstream than winter steelhead (Withler 1966; Roelofs 1983; Behnke 1992). Inland Columbia River Basin steelhead are almost exclusively summer steelhead; winter steelhead may have been excluded from the inland Columbia River by a seasonal barrier at Celilo Falls or the great migration distance from the ocean (Busby et al. 1996).

Nonanadromous forms of *O. mykiss* have been called rainbow or redband trout. For example the inland non-anadromous form is typically called the Columbia River redband trout (Busby et al. 1996). Nonanadromous and anadromous forms co-occur more frequently in inland populations than in coastal populations (Busby et al. 1996). In coastal populations where they co-occur, the forms are usually separated by a migration barrier, either natural or man-made (Busby et al. 1996).

Where the two forms co-occur, offspring of resident fish may migrate to sea, and offspring of anadromous steelhead may remain in streams as resident fish (Burgner et al. 1992; Shapolov and Taft 1954). Mullan et al. (1992) found evidence that, due to very cold stream temperatures in the Methow River in Washington, juvenile steelhead had difficulty attaining size for smoltification. He concluded that most of the juvenile fish present that do not emigrate downstream early in life do not grow enough due to the cold temperatures and are hence restricted to a resident life history, regardless of anadromous or non-anadromous parents.

After hatching and emergence, steelhead move to deeper parts of the stream, establish territories and change their diet from microscopic aquatic organisms to larger organisms such as isopods, amphipods and aquatic and terrestrial insects, primarily associated with the stream bottom (Wydoski and Whitney 1979). During rearing, streamside vegetation and submerged cover (logs, rocks and aquatic vegetation) are important. Cover provides food, temperature stability, and protection from predators. Densities of juvenile steelhead are highest in areas containing instream cover (Narver 1976; Reiser and Bjornn 1979; Johnson 1985). Juvenile steelhead remain in freshwater for 1 to 4 years before smoltification. In areas where anadromous and non-anadromous forms co-occur in sympatry, habitat partitioning occurs (Allee 1981). Smoltification may be initiated by environmental factors such as

photoperiod, water temperature and water chemistry (Folmar and Dickhoff 1980; Wedemeyer et al. 1980).

Steelhead remain in the ocean for 2 to 3 years, occasionally for 4 years (Shapolov and Taft 1954). Distribution in the ocean is hard to track due to no formation of schools, and steelhead do not use areas where commercial harvest of other Pacific salmon stocks occur (Pauley et al. 1986). Distribution at sea appears to be influenced by surface water temperature and conforms closely to the 5°C isotherm on the North and the 15°C isotherm on the south (Sutherland 1973).

2.3.3. Designated Critical Habitat

On September 2, 2005, the National Marine Fisheries Service (NMFS) designated critical habitat for 12 West Coast Salmon and Steelhead ESU/DPS' (70 FR 52630). The Snake River Basin steelhead DPS was one of the DPSs included in this designation.

As designated, critical habitat is defined as the lateral extent of the width of the stream channel as defined by its bankfull elevation. If the bankfull elevation is not evident on either bank, the OHWM, as defined by the Corps, is used to determine the lateral extent of critical habitat. In streams or areas where the OHWM is not defined, the width of the stream will be defined by the bankfull elevation (69 FR 74584).

Adjacent floodplains are not included as critical habitat. However, NMFS acknowledges that the quality of aquatic habitat within stream channels is intrinsically related to the character of the floodplains and associated riparian zones; similarly, human activities that occur outside the river channels can have demonstrable effects on physical and biological features of the aquatic environment (69 FR 74584).

The lateral extent of critical habitat in nearshore marine areas is defined as the area inundated by extreme high tide. It represents a regularly occurring intertidal fringe that is recognizable, and contains and influences PCEs such as large wood, rocks and boulders, and aquatic vegetation. The PCEs for nearshore marine areas are defined as areas being free of obstruction with water quality and quantity conditions and forage, including aquatic invertebrates and fishes, supporting growth and maturation; and natural cover such as submerged and overhanging large wood, aquatic vegetation, large rocks and boulders, and side channels. This area is also the zone containing important marine vegetation and cover (e.g., eelgrass meadows and kelp forests) and in which salmon forage species reside (e.g., surf smelt and sand lance). Activities potentially affecting PCEs in this zone include the construction of overwater structures (e.g., docks and piers), dredging and bank armoring.

Critical habitat includes PCEs, which are those physical and biological components deemed essential for the conservation and recovery of the species, including 1) space

for individual and population growth and for normal behavior; 2) food, water, air, light, minerals, or other nutritional or physiological requirements; 3) cover or shelter; 4) sites for breeding, reproduction, and rearing of offspring; and 4) habitats that are protected from disturbance or are representative of the historical geographical and ecological distribution of a species (69 FR 74581).

A map showing where critical habitat has been designated for salmon and steelhead in Washington State has been posted online at: <http://www.nwr.noaagov/1salmon/salmesa/crithab/WA-MAP.PDF>.

.

Chapter 3. References

Allee, B.A. 1981. The role of interspecific competition in the distribution of salmonids in streams. In: E.L. Brannon and E.O. Salo (eds.) *Salmon and trout migratory behavior symposium.* Pp. 111-122. University of Washington, Seattle, WA.

Allen, M.A. and T.J. Hassler. 1986. Species profiles: life histories and environmental requirements of coastal fishes and invertebrates (Pacific Southwest)--Chinook salmon. U.S. Fish and Wildlife Service Biological Report 82 (11.49). U.S. Army Corps of Engineers, TR EL-82-4. 26 pp.

Behnke, R.J. 1992. Native trout of western North America. Monograph No. 6. American Fish. Soc., Bethesda, MD. 275 pp.

Bishop, S., and A. Morgan, (eds.). 1996. Critical habitat issues by basin for natural Chinook salmon stocks in the coastal and Puget Sound areas of Washington State. Northwest Indian Fisheries Commission, Olympia, WA 105 pp.

Boag, T.D. 1987. Food habits of bull char, *Salvelinus confluentus*, and rainbow trout, *Salmo gairdneri*, coexisting in a foothills stream in northern Alberta. *Canadian Field-Naturalist* 101(1):56-62.

Buchanan, D. M. and S. V. Gregory. 1997. Development of Water Temperature Standards to Protect and Restore Habitat for Bull Trout and Other Cold Water Species in Oregon. Pages 1-8 *in* Mackay, W.C., M.K. Brewin and M. Monita, eds. Friends of the Bull Trout Conference Proceedings.

Burgner, R. L., J. T. Light, 1. Margolis, T. Okazaki, A. Tautz and S. Ito. 1992. Distribution and origins of steelhead trout *(Oncorhynchus mykiss)* in offshore waters of the North Pacific Ocean. *Int. North Pac. Fish. Comm. Bull*. 51, 92 pp.

Busby, P. J., T. C. Wainwright, G. J. Bryant, L. Lierheimer, R. S. Waples, F. W. Waknitz, and 1. V. Lagomarsino. 1996. Status review of west coast steelhead from Washington, Idaho, Oregon, and California. U. S. Dept. Commer., NOAA Tech Memo. NMFS-NWFSC-27, 261 pp.

Chamberlin, T. W. 1982. Timber harvest. *In:* M. R. Meehan (ed) Influence of forest and range management on anadromous fish habitat in western North America. U. S. For. Serv. Gen. Tech. Rep. PNW- 13 6. pp. 1-3 0. Pacific Northwest Forest and Range Experiment Station, Portland, OR.

Donald, D.B. and D.J. Alger. 1993. Geographic distribution, species displacement, and niche overlap for lake trout and bull trout in mountain lakes. *Canadian Journal of Zoology* 7 1: 238-247.

Folmar, L. C. and W. W. Dickhoff 1980. The parr-smolt transformation (smoltification) and seawater adaption in salmonids: review of selected literature. *Aquaculture* 21(l): 1-37.

Fraley, J.J. and B.B. Shepard. 1989. life history, ecology and population status of migratory bull trout *(Salvelinus confluentus)* in the Flathead Lake and River system, Montana. *Northwest Science* 63(4):133-143.

Gilbert, C. H. 1912. Age at maturity of Pacific coast salmon of the genus *Oncorhynchus.* Bull. U. S. Fish Comm. 32:57-70.

Goetz, F. 1989. Biology of the bull trout, *Salvelinus confluentus,* literature review. Willamette National Forest, Eugene, OR.

Healey, M.C. 1991. The life history of Chinook salmon *(Oncorhynchus tshawytscha). In: C.* Groot and L. Margolis (eds.), *Pacific salmon life histories*, pp. 311-193. University of British Columbia Press, Vancouver British Columbia, Canada.

Hoelscher, B. and T.C. Bjornn. 1989. Habitat, density and potential production of trout and char in Pend Oreille Lake tributaries. Project F-71-R-10, Subproject III, Job No. 8. Idaho Department of Fish and Game, Boise, ID.

Howell, P.J. and D.V. Buchanan, eds. 1992. Proceedings of the Gearhart Mountain bull trout workshop. Oregon Chapter of the American Fisheries Society, Corvallis, OR.

Idaho Department of Fish and Game. 1994. Documents submitted to the ESA Administrative Record for west coast steelhead by E. Leitzinger. 18 October 1994. (Available from Environmental and Technical Services Division, Natl. Mar. Fish. Serv. 525 N. E. Oregon Street, Suite 500, Portland, OR 97232).

Jakober, M. 1995. Autumn and Winter Movement and Habitat Use of Resident Bull Trout and Westslope Cutthroat Trout in Montana.

Johnson, T. H. 1985. Density of steelhead parr for mainstream rivers in western Washington during the low flow period, 1984. Wash. Dept. Game. Fish. Res. Rep. 85-6. 29 pp.

Leathe, S.A. and P. Graham. 1982. Flathead Lake Fish Food Habits Study. Environmental Protection Agency, through Steering Committee for the Flathead River Basin Environmental Impact Study.

Meehan, W.R., and T. C. Bjornn. 1991. Salmonid distributions and life histories. *American Fisheries Society Special Publication* 19:47-82.

Miller, R. J., and E. L. Brannon. 1982. The origin and development of life history patterns in Pacific salmon. *In* E. L. Brannon and E.O. Salo (eds) Proceedings of the Salmon and Trout Migratory Behavior Symposium, pp. 296-309. Univ. of Wash. Press, Seattle, WA.

Mullan, J. W., K. R. Williams, G. Rhodus, T. W. Hillman, and J. D. McIntyre. 1992. Production and habitat of salmonids in mid-Columbia River tributary streams. Monograph 1, U. S. Fish and Wildlife Service, Box 549, Leavenworth, WA 98826, 489 pp.

Myers, J. M., R. *G.* Kope, *G. J.* Bryant, D. Teel, L. *J.* Lierheimer, T. C. Wainwright, W. S. Grant, F. W. Waknitz, K. Neely, S. T. Lindley, and R. S. Waples. 1998. Status review of Chinook salmon from Washington, Idaho, Oregon, and California. U.S. Dept. Commerce, NOAA Tech. Memo. NMFS-NWFSC-35,443 pp.

Narver, D. W. 1976. Stream management for west coast anadromous salmonids. *In:* Stream management of salmonids. *Trout*, Winter 1976 Suppl. pp. 7-13.

Oliver, C.G. 1979. Fisheries investigations in tributaries of the Canadian portion of the Libby Reservoir. Fish and Wildlife Branch, Kootenay Region.

Pauley, G. B., B. M Bortz, and M. F. Shepard. 1986. Species profiles: life histories and environmental requirements of coastal fishes and invertebrates (Pacific Northwest) steelhead trout. U. S. Fish Wildlife. Serv. Biol. Rep. 82(11.62). U. S. Army Corps of Engineers, TR EL-82-4. 24 pp.

Platts, W. S. 1981. Effects of livestock grazing. *In:* M. R. Meehan (ed) Influence of forest and range management on anadromous fish habitat in western North America. U. S. For. Serv. Gen. Tech. Rep. PNW-124. pp. 1-25. Pacific Northwest Forest and Range Experiment Station, Portland, OR.

Pratt, K.L. 1984. Pend Oreille trout and char life history study. Idaho Department of Fish and Game, Boise, Idaho.

———. 1992. A review of bull trout life history. Pages 5 - 9 *in* Howell, P.J. and D.V. Buchanan, eds. Proceedings of the Gearhart Mountain bull trout workshop. Oregon Chapter of the American Fisheries Society, Corvallis, OR.

Pratt, K.L., and J.E. Huston. 1993. Status of bull trout *(Salvelinus confluentus)* in Lake Pend Oreille and the lower Clark Fork River. Draft report prepared for the Washington Water Power Company, Spokane, WA.

Quigley, T.M. and S.J. Arbelbide, tech.eds. 1997. An assessment of ecosystem components in the interior Columbia basin and portions of the Klamath and Great Basins: volume 3. Gen. Tech. Rep. PNW-GTR-405. Portland, OR: U.S. Department of Agriculture, Forest Service, Pacific Northwest Research Station.

Ratliff, D. E. and P. J. Howell. 1992. The Status of Bull Trout Populations in Oregon. Pages 10*17 in* Howell, P.J. and D.V. Buchanan, eds. Proceedings of the Gearhart Mountain bull trout workshop. Oregon Chapter of the American Fisheries Society, Corvallis, OR.

Reisenbichler, R. R., J. D. McIntyre, M. F. Solzzi, and S. W. Landino. 1992. Genetic variation in steelhead of Oregon and northern California. *Trans. Am. Fish. Soc.* 121:158-169.

Reiser, D. W. and T. C. Bjornn. 1979. Habitat requirements of anadromous salmonids. In: W.R. Meehan (ed). Influence of forest and rangeland management on anadromous fish habitat in western North America, pp. 1-54. U.S. For. Serv. Gen. Tech. Rep. PNW-96. Pacific Northwest Forest and Range Experiment Station, Portland, OR.

Rich, C.F., Jr. 1996. Influence of abiotic and biotic factors on occurrence of resident bull trout in fragmented habitats, western Montana. MS thesis, Montana State University, Bozeman, MT.

Rieman, B.E. and J.D. McIntyre. 1993. Demographic and habitat requirements for conservation of bull trout. USDA Forest Service, Intermountain Research Station. General Technical Report INT-302.

———. 1995. Occurrence of bull trout in naturally fragmented habitat patches of varied size. Transactions of the American Fisheries Society Vol. 124 (3):285-296.

———. 1996. Spatial and temporal variability in bull trout redd counts. *North American J. of Fisheries Management* 16:132-146.

Rieman, B.E., D.C. Lee and R.F. Thurow. 1997. Distribution, status and likely future trends of bull trout within the Columbia River and Klamath Basins. *North American J. of Fisheries Management* 17:1111-1125.

Roelofs, T. D. 1983. Current status of California summer steelhead (*Salmo gairdneri)* stocks and habitat and recommendations for their management. Submitted to USDA Forest Service Region 5, 77 pp. (Available from Environmental and Technical Services division, NatI. Mar. Fish. Serv. 525 N. E. Oregon Street, Suite 500, Portland, OR 97232).

Sexauer, H.M. and P.W. James. 1997. Microhabitat Use by Juvenile Trout in Four Streams Located in the Eastern Cascades, Washington. Pages 361-370 *In* Mackay, W.C., M.K. Brewin and M. Monita, eds. Friends of the Bull Trout Conference Proceedings.

Shapovalov, L., and A.C. Taft. 1954. The life histories of the steelhead rainbow trout *(Salmo gairdneri gairdneri)* and silver salmon *(Oncorhynchus kisutch)* with special reference to Waddell Creek, California, and recommendations regarding their management. Calif. Dept. Fish Game, Fish Bull. 98, 375 pp.

Shepard, B.B., S.A. Leathe, T.M. Weaver, and M.D. Emk. 1984. Monitoring levels of fine sediment within tributaries of Flathead Lake and impacts of fine sediment on bull trout recruitment. Proceedings of the Wild Trout III Symposium, Yellowstone National Park, WY.

Spence, B. C., G. A. Lomnicky, R. M. Hughes, and R. P. Novitzki. 1996. An-ecosystem approach to salmonid conservation. TR-4501-96-6057. ManTech Environmental Research Services Corp., Corvallis, OR. (Available from the National Marine Fisheries Service, Portland, OR.

Sutherland, D. F. 1973. Distribution, seasonal abundance and some biological features of steelhead trout, *Salmo gairdneri,* in the North Pacific Ocean. *U. S. Natl. Mar. Fish. Serv. Fish. Bull*. 71(3) 787-826.

Swanberg, T.R. 1997. Movement and habitat use by fluvial bull trout in the Blackfoot River, Montana. *Transactions of the American Fisheries Society* 126:735-746.

Thomas, G. 1992. Status of bull trout in Montana. Report prepared for Montana Department of Fish, Wildlife and Parks, Helena, Montana.

U.S. Fish and Wildlife Service (USFWS). 2002. Recovery plan for Howell's Spectacular Thelypody (*Thelypodium howellii* ssp. *specabilis*). U.S. Fish and Wildlife Service, Portland, OR. 47 pp.

Watson, G., and T.W. Hillman. 1997. Factors affecting the distribution and abundance of bull trout: An investigation at hierarchical scales. North

American Journal of Fisheries Management. 17: 237-252. Westover, W.T. 1999. Wigwam River bull trout (creel survey) – Habitat Conservation Trust Fund Progress Report (1998). Fisheries Project Report KO 55. 8 pp. + 3 apps.

Wedemeyer, G. A., R. L. Saunders, and W. C. Clarke. 1980. Environmental factors limiting smoltification and early marine survival of anadromous salmonids. *Mar. Fish. Rev*. 42(6): 1-14.

Withler, 1. L. 1966. Variability in life history characteristics of steelhead trout *(Salmon gairdneri)* along the Pacific coast of North America. J. Fish. Res. Board Can. 23(3):365-393.

Wydoski, R. S., and R. R. Whitney. 1979. Inland fishes of Washington. University of Washington Press. Seattle, WA. 220 pp.

Wyman, K. H. 1975. Two unfished salmonid populations in Lake Chester Morse. MS thesis, University of Washington. Seattle, WA. Aitkin, J. K. 1998. The importance of estuarine habitats to anadromous salmonids of the Pacific Northwest: A literature review. U. S. Fish and Wildlife Service, Western Washington Office, Lacey, WA.

Yee, C. S. And T. D. Roelofs. 1980. Planning forest roads to protect salmonid habitat. *In* M. R. Meehan (ed) Influence of forest and rangeland management on anadromous fish habitat in western North America. U. S. For. Serv. Gen. Tech. Rep.. PNW- 109. pp. 1-26. Pacific Northwest Forest and Range Experiment Station, Portland, OR.

Appendix D

Essential Fish Habitat Assessment

Essential Fish Habitat

Background

Public Law 104-297, the Sustainable Fisheries Act of 1996, amended the Magnuson-Stevens Fishery Conservation and Management Act to establish new requirements for essential fish habitat (EFH) descriptions in federal fishery management plans and to require federal agencies to consult with NMFS on activities that may adversely affect EFH.

The Magnuson-Stevens Act requires all fishery management councils to amend their fishery management plans to describe and identify EFH for each managed fishery. The Pacific Fishery Management Council (1999) has issued such an amendment in the form of Amendment 14 to the Pacific Coast Salmon Plan, and this amendment covers EFH for all fisheries under NMFS jurisdiction that would potentially be affected by the covered activities. Specifically, these are the Chinook, coho and pink salmon fisheries. EFH includes all streams, lakes, ponds, wetlands, and other currently viable water bodies and most of the habitat historically accessible to salmon. Activities occurring above impassable barriers that are likely to adversely affect EFH below impassable barriers are subject to the consultation provisions of the Magnuson-Stevens Act.

The Magnuson-Stevens Act requires consultation for all federal agency actions that may adversely affect EFH. EFH consultation with NMFS is required by federal agencies undertaking, permitting, or funding activities that may adversely affect EFH, regardless of its location. Under Section 305(b)(4) of the Magnuson-Stevens Act, NMFS is required to provide EFH conservation and enhancement recommendations to federal and state agencies for actions that adversely affect EFH. Wherever possible, NMFS utilizes existing interagency coordination processes to

fulfill EFH consultations with federal agencies. For the covered activities, this goal is being met by incorporating EFH consultation to the Endangered Species Act Section 7 consultation, as represented by this Biological Assessment.

Location

The location of activities covered by this assessment is described in detail in the Biological Assessment in Chapter 1.

Project Description

The project description is provided in the Biological Assessment in Chapter 2.

Occurrence of Essential Fish Habitat

Species from the Pacific salmon guild may occur in the Project Action Area. Species from the groundfish guild and the coastal pelagic guild do not occur within the project action area.

Table 1-1 identifies the life history stage that may occur within the project action area of the project for those species in the Pacific salmon guild.

Table 1-1. Pacific Salmon Species with Designated EFH and the Life History Stages that May Occur in the Project Action Area

PACIFIC SALMON	Egg	Larvae	Juvenile	Adult	Spawning
Chinook salmon	X	X	X	X	X
Coho salmon					
Pink salmon					

Source: PFMC 1999

Salmon Essential Fish Habitat

Effects to the environmental baseline that would impact EFH for Chinook salmon are discussed in detail in Chapter 5 and Chapter 6.

Essential Fish Habitat Minimization Measures

Conservation measures designed to avoid or minimize potential impacts to species protected under the federal Endangered Species Act will also help avoid and

minimize impacts of the project on EFH for Pacific salmon. A complete list of avoidance and minimization measures is provided in Chapter 2.

Conclusions

In accordance with EFH requirements of the Magnuson-Stevens Fishery Conservation and Management Act, it has been determined that the project will have no adverse impact to EFH utilized by Pacific salmon species. This determination is based upon the nature of the project and the impacts that have been identified and described in Chapter 6 of the Biological Assessment.

The construction of the project may modify or otherwise impact existing EFH for species in the Pacific salmon guild. It has been determined that the project may temporarily impact EFH for federally managed fisheries in the waters present in the project action area; however, it is anticipated that the project will benefit EFH for the Pacific salmon guild by providing access to habitat that is currently inaccessible.

References

Pacific Fishery Management Council (PFMC). 1999. Amendment 14 to the Pacific Coast Salmon Plan, Appendix A. Identification and description of Essential Fish Habitat, adverse impacts, and recommended conservation measures for salmon. Pacific Fishery Management Council. Portland, OR. Available at: <http://www.pcouncil.org.htm> (January 14, 200