RECLAMATION

Managing Water in the West

CONCEPTUAL DESIGN REPORT

TRAIL LAKE MODIFICATIONS

Columbia Basin Project - Washington
Main Canal
Pacific Northwest Region

DRAFT

Bureau of Reclamation
PN Region Design Group
1150 North Curtis Road
Boise ID 83706-1234

December, 2005

Columbia Basin Project – Washington
Main Canal

Trail Lake Modification
Appraisal Design

TABLE OF CONTENTS

1.0 Introduction 1

2.0 Existing Facilities 1

3.0 Problems and Needs 1

4.0 Alternatives Investigated 2
- 4.1 Canal Breach 3
- 4.2 Corrugated Metal Pipe Culverts 4
- 4.3 Concrete Box Culvert 7

5.0 Advantages and Disadvantages of Each Alternative 8

6.0 Conclusions and Recommendations 9

Appendix A – Drawings

1. 222-100T-1495 Canal Breach Option
2. 222-100T-1496 Corrugated Metal Pipe Option
3. 222-100T-1497 Concrete Box Culvert Option

Reference Drawings

4. 222-116-20476 Main Canal – Profile and Sections – Sta. 255+85.56 to Sta. 326+90.0
5. 222-D-15597 Main Canal – Sta. 318+80 – Transition
6. 222-D-15598 Main Canal – Sta. 325+61.08 - Transition

Appendix B – Cost Estimates

DRAFT

1.0 Introduction

The purpose of this investigation is to examine alternatives to reduce or eliminate the continual maintenance issues involved with the repair of the concrete lining of the Columbia Basin Project's Main Canal adjacent to Trail Lake. The Main Canal conveys all the flow for the over 630,000 acres of land irrigated within the Columbia Basin Project.

2.0 Existing Facilities

The Main Canal commences at the headworks at Dry Falls Dam at the southern end of Banks Lake. It flows for approximately 1.8 miles to the Bacon Siphon and Tunnel structures which consist of two siphons and two tunnels. At the outlet of the tunnels, the canal extends for approximately one mile as an unlined canal section and then transitions to a lined canal as it extends adjacent to Trail Lake. The lined canal section was designed for a maximum flow of 13,200 cfs. The section has a 20-foot base width and 1.5:1 side slopes. The lining is 5-inches thick, unreinforced concrete.

Trail Lake is a small lake formed in Trail Lake Coulee which approximately parallels the Main Canal. During the planning stages of the Columbia Basin Project, there was a proposal to discharge the Main Canal into the upstream end of Trail Lake and then continue the canal at the downstream end of the lake, thereby saving the cost of approximately 2.5 miles of canal construction. However, there was a concern about possible seepage losses from the lake. The evaluation of this concern is found in the report *Trail Lake Seepage, March 27, 1941*. The report contained the following conclusion "*Sufficient information has been presented in this report to conclude that Trail Lake will not serve as a reservoir in its present condition.*" The report was concerned with seepage through pervious gravel deposits and a talus slope within the lake area. As remedies to the seepage concerns it states *"Possibly the gravel bar and talus might be sealed off by a silt blanket"*.

3.0 Problems and Needs

The problem at this site is displacement and damage to the canal's concrete lining. The concrete lining panels are forced out due to hydrostatic pressure in the embankment fill. This results from the following sequence of events: The canal is filled at the start of the irrigation season. It is observed that Trail Lake water surface elevation begins to rise after the canal surface rises, when the canal is at the peak water surface elevation, the lake rises to about the same elevation. At the end of the irrigation season the canal flow is gradually reduced and the canal water surface elevation lowers. The lake water surface elevation does not lower as quickly. The saturated embankment fill material exerts a force on the lining that is not counter-balanced by the hydrostatic pressure in the canal, resulting in a 'blow-out" in the lining.

DRAFT

Figure 1 shows a couple of years of water surface elevation measurements in Trail Lake. It shows the lake elevation rising at the start of the irrigation season and then receding at the end of the irrigation season and shows a maximum water surface elevation in the lake at about El. 1501.0. It also shows that the canal and lake are in some way hydraulically connected.

FIGURE 1 - Trail Lake Elevation

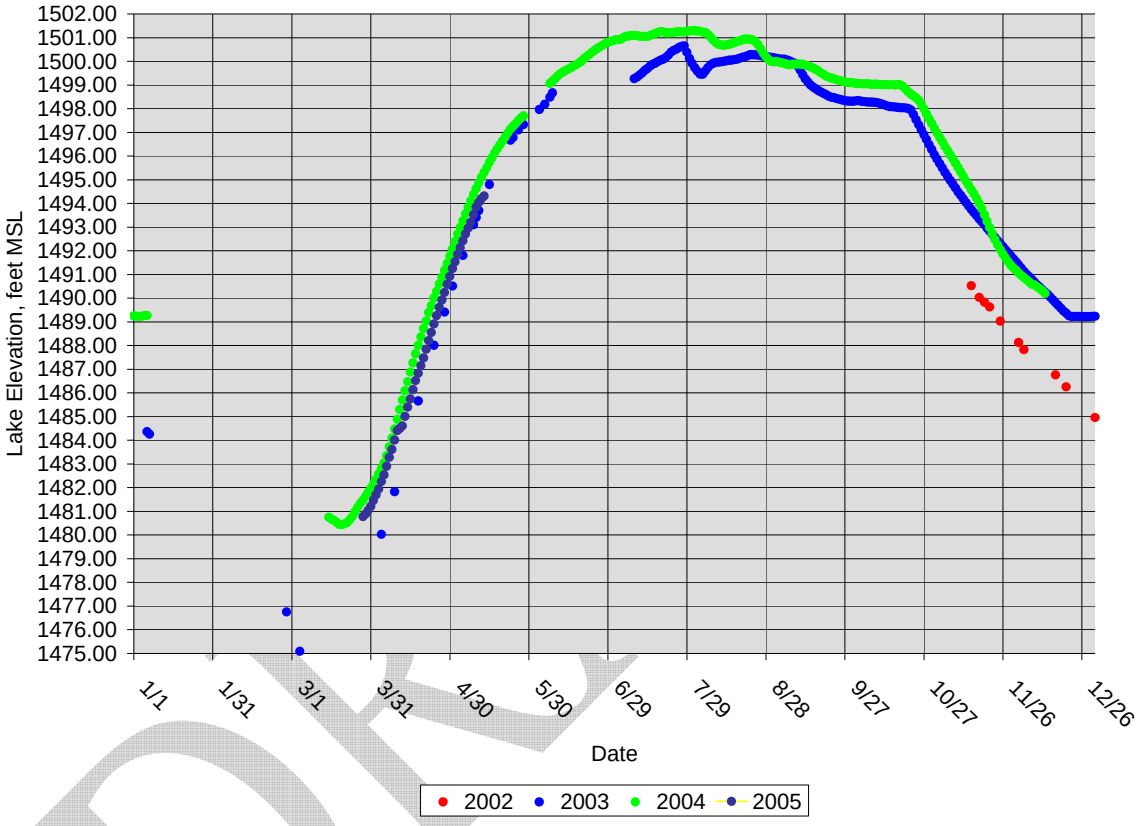

4.0 Alternatives Investigated

The alternatives investigated will attempt to solve the problem of excessive hydrostatic pressure on the canal lining by allowing the lake to drain into the canal during canal draw-down. The alternatives are designed to permit a maximum head differential between the lake and the canal that will not cause damage to the lining. A simplified stability analysis of the lining was calculated and showed that with the lake at a maximum water surface at El.1501, a water surface differential between the lake and canal of one foot would not cause instability. This maximum differential was used in the analysis of alternatives.

The analyses are also calculated on the basis of a maximum rate at which the canal water surface elevation is lowered during canal shut-down operations. Information provided by the Ephrata Field Office set the maximum rate at six feet per day.

4.1 Canal Breach

This alternative involves excavating a portion of the canal embankment to hydraulically connect the lake with the canal. The canal breach is located at Sta.324+80 (see Figure 2). The invert of the canal at this location is about El.1485.0. The El.1485 existing ground contour within the lake area is relatively close to the canal breach which will allow the lake to be drained down to El. 1485.0. A plan and section views of this alternative are shown on Drawing 222-100T-1495.

The construction of this alternative will involve saw-cutting and demolition of about 120 feet of the existing concrete lining and then excavating a section through the canal embankment. The base width of the breach is 50 feet with 1.5:1 side slopes. The side slope and breach invert are lined with riprap. The excavation into Trail Lake will have to extend to the El.1485 ground contour.

This size opening through the embankment was selected to provide a minimal head differential between the lake and the canal and also to result a low velocity flow through the opening. The flow through the breach was estimated by calculating the volume of the lake that would have to flow through the breach as the canal water surface is lowered. The design canal water surface lowering rate is six feet of drop in elevation per day, or a rate of 0.25 feet per hour. The lake volume for a given elevation was defined by the Trail Lake Area/Capacity Curve shown on Figure 3.

The analysis shows that when the lake is at the high elevation of El.1501, the velocity of flow through the breach is 0.4 fps and the head differential is negligible. At a low lake elevation of El.1486, the velocity is about 5.4 fps and requires approximately 0.7 feet of head differential. This analysis showed that the size of the breach opening is adequate to meet the design parameters.

The cost of this alternative was made by calculating quantities of material required and applying typical unit prices for each item. Included in the total cost are typical factors for unlisted items, contingencies, and non-contract costs. The total estimated cost for this alternative is $220,000. A summary of all items and costs is shown in Appendix B.

DRAFT

FIGURE 3 - Trail Lake Area/Capacity

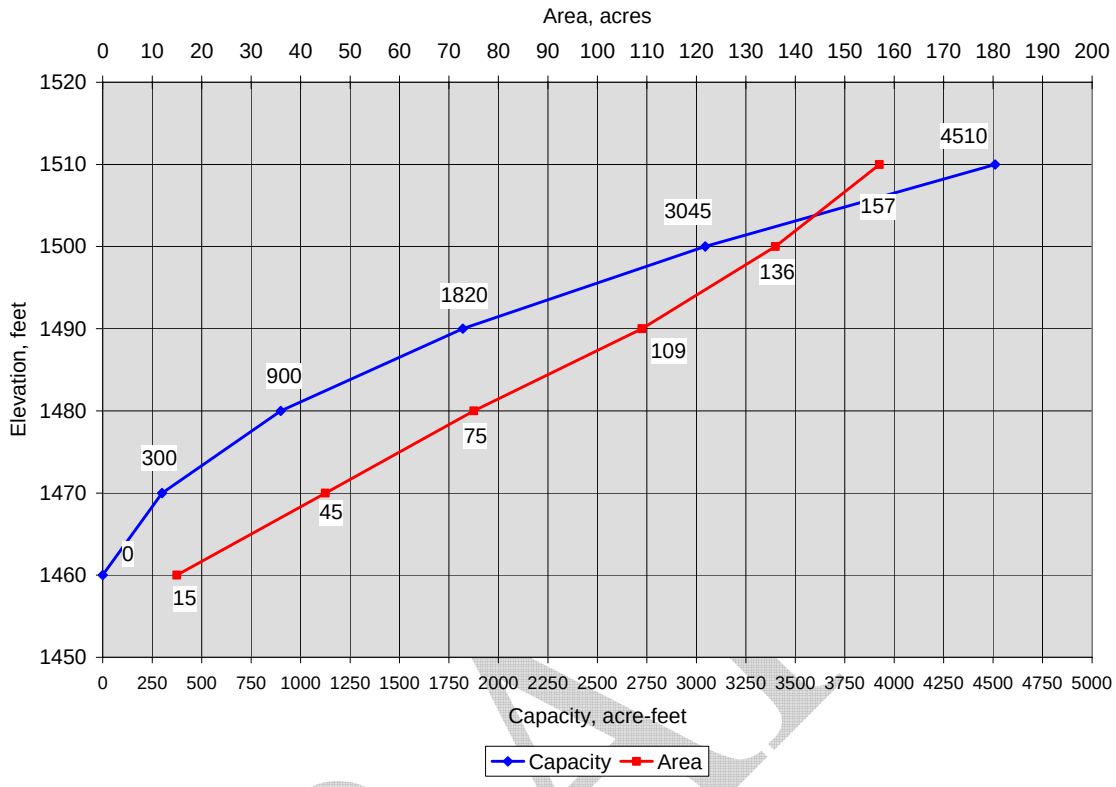

4.2 Corrugated Metal Pipe Culverts

This alternative uses the same principle of providing a hydraulic connectivity between the lake and the canal by constructing corrugated metal pipe (CMP) culverts through the canal embankment. The CMP culverts are located at Sta. 324+80 (see Figure 2). The culvert inverts are set at El.1485.0. A plan and sections of the design are shown on Drawing 222-100T-1496.

The size and number of CMP's was determined by an iterative process involving the hydraulic design of the culverts with the goal of maintaining a maximum head differential between the lake and the canal of one foot. The hydraulic design procedure was the following: The calculations started with the lake and the canal at El. 1501.00. The canal is assumed to lower by 0.25 feet per hour. After one hour, the canal is at El. 1500.75, and the lake was assumed to be at El. 1501.00, resulting in a head differential of 0.25 feet. The discharge through the culverts for these water surface elevations was then calculated. The total volume discharged from the lake for the first hour is then calculated as the culvert discharge rate times one hour. This volume is subtracted from the volume of the lake and a new lake elevation is determined based on the Area/Capacity curve shown on Figure 3.

FIGURE 2

This procedure is continued as the canal is drained. It was found that using two, 96-inch diameter CMP's would result in a maximum head differential of about 0.6 feet for the upper elevations of the lake. Figure 4 shows a plot of the canal and lake water surface elevations and the lake volume vs. time as the canal is drained. The head differential increases to a maximum of 2.8 feet when the lake is at El.1487.8 and the canal has completely drained. This differential at this low elevation in the lake will not cause a problem with movement of the canal lining. However, the higher differential that occurs at the lower lake elevations does result in higher velocities exiting the culvert. At this location along the Main Canal, the invert and right side of the canal are unlined. To prevent localized scour of the canal at the outlet of the CMP, about 80 feet of the canal invert and right side will be concrete lined.

FIGURE 4 - Trail Lake CMP Culvert Alternative

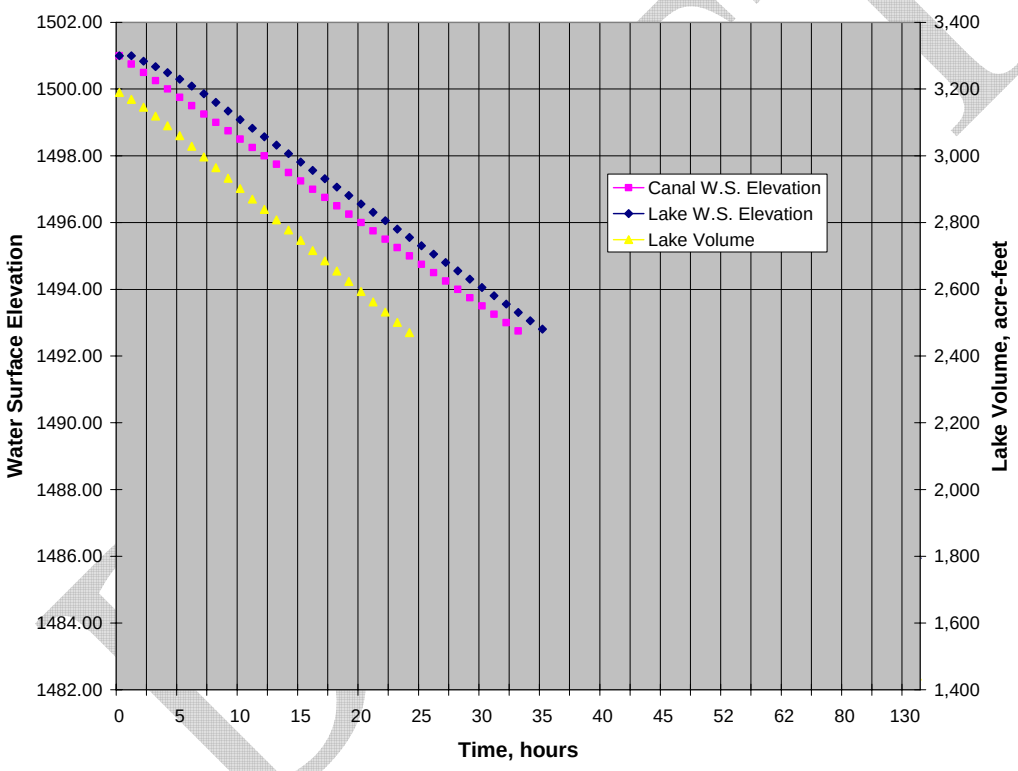

The construction of this alternative will involve; saw-cutting and demolition of about 75 feet of the existing concrete lining, excavating a section through the canal embankment, installing two 96-inch CMP culverts, backfilling and compacting the canal embankment, and replacing the canal lining. The excavation into Trail Lake will have to extend to the El.1485 ground contour.

The estimated total cost of the alternative, including typical factors for unlisted items, contingencies, and non-contract costs is $910,000. A summary of all items and costs is shown in Appendix B.

4.3 Concrete Box Culvert

This alternative is similar to the CMP culvert, except that a concrete culvert structure is used to hydraulically connect the lake with the canal. The center-line of the structure is located at the same location as the other alternatives at Sta. 324+80. A plan and sections of this alternative is shown on Drawing 222-100T-1497. This design consists of a trashrack, three 72-inch by 72-inch slide gates, and a concrete box culvert structure consisting of three 72-inch by 72-inch barrels.

The size of the culvert was calculated by the same process previously described for the CMP alternative. Starting with the lake and canal at El. 1501.00 and assuming the canal water surface lowers at the rate of 0.25 feet per hour, three 72-inch by 72-inch culverts were found to be able to discharge the lake volume with a maximum head differential of 0.6 feet for the upper elevations of the lake. Figure 5 shows a plot of the canal and lake water surface elevations vs. time as the canal is drained. The head differential increases to a maximum of 1.3 feet when the lake is at El.1486.3 and the canal has completely drained. This differential at this low elevation in the lake will not cause a problem with movement of the canal lining. However, the invert and right side of the Main Canal in the vicinity of the box culvert outlet will be concrete lined to reduce scour.

FIGURE 5 - Trail Lake - Concrete Box Culvert Option

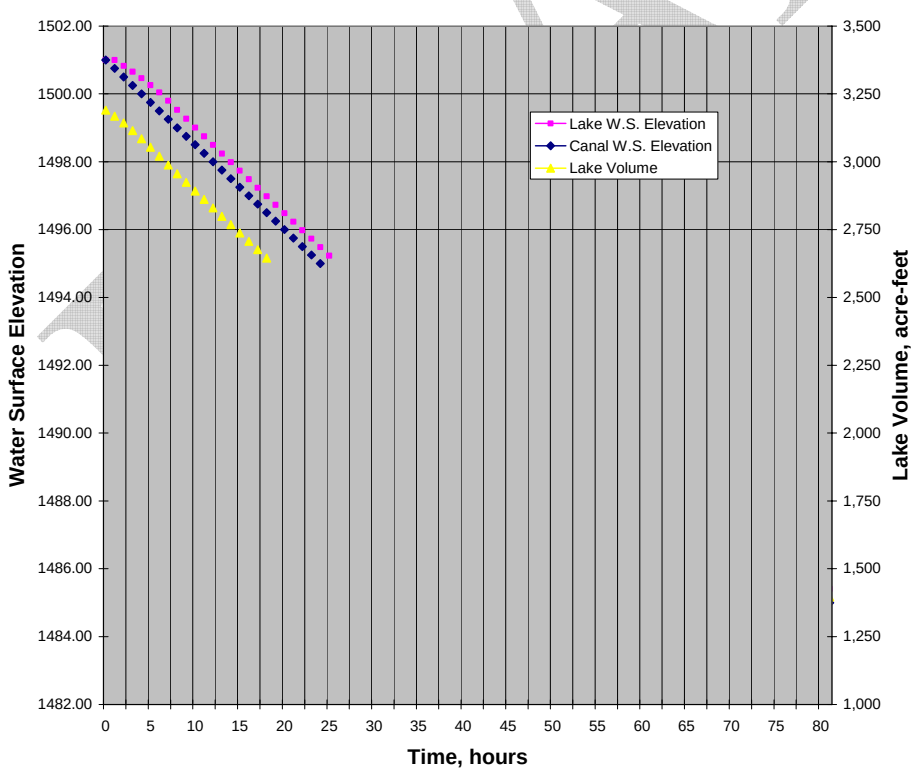

The construction of this alternative will involve; saw-cutting and demolition of about 80 feet of the existing concrete lining, excavating a section through the canal embankment, constructing the concrete box culvert structure, installing slide gates and trashrack, backfilling and compacting the canal embankment, and replacing of the canal lining.

The estimated total cost of this alternative, including typical factors for unlisted items, contingencies, and non-contract costs is $2,170,000. A summary of all items and costs is shown in Appendix B.

5.0 Advantages and Disadvantages of Each Alternative

Canal Breach -

Advantages –
- Lowest cost alternative
- Simple to implement

Disadvantages -
- No control over flow into or out of the lake
- Debris and trash in lake can flow into the canal
- Interrupts access along canal on O&M road

Corrugated Metal Pipe Culverts-

Advantages –
- Maintains access on O&M road
- Relatively easy to construct (no concrete placements)

Disadvantages –
- No control over flow into or out of the lake
- Debris and trash in lake can flow into the canal

Concrete Box Culvert –

Advantages –
- Maintains access on O&M road
- Gates control flow into and out of the lake
- Trashrack helps prevent debris from lake entering canal

Disadvantages –
- Most expensive alternative
- Requires the longest construction time

DRAFT

- Trashracks and gates require maintenance

6.0 Conclusions and Recommendations

All three alternative examined were found to meet the objective of maintaining a minimal head differential between the lake and the canal. This will reduce the hydro-static pressure on the canal lining which should reduce the damage to the canal lining.

It appears that through the years since the construction of the canal, the lake has possibly sealed off seepage due to sediment and fines flowing into the lake. The concern raised in the 1941 seepage study regarding the potential for seepage out of Trail Lake may be resolved. However, there is not complete certainty of this. The lake level is maintaining relatively closely to the canal level. It may be possible that seepage continues out of the lake and is balanced by seepage into the lake from the canal. The canal breach and CMP alternatives have the disadvantage that they are not able to restrict flow into the lake from the canal. This open connection to the canal could allow additional seepage from the lake. This additional seepage would mean a loss of additional project water.

The concrete box culvert alternative with the gates has the option of preventing additional flow into the lake. The culvert could be operated with the gates closed during the irrigation season. Seepage into the lake would be unchanged from the present condition. There would be no more loss of irrigation water than is presently occurring. At the end of the irrigation season, the gates would be opened when the canal is drained. The CMP alternative could also be designed with gates and a trashrack. It would require a concrete headwall for the gates and for trashrack support. The CMP alternative with this modification would likely be less expensive than the concrete box culvert alternative.

In addition to opening the gates as the canal is drained, the rate of lowering the canal should be as slow as possible. Even with a culvert to keep the water levels relatively even, the canal embankment material will be saturated and will exert hydro-static pressures on the lining until the soil has drained. It is also recommended that as future repairs and replacements to the canal lining panels are made, a layer of non-cohesive free-draining backfill be placed behind the panel. Flap valve drains should be installed in the lining to help drainage of the embankment soil.

DRAFT

APPENDIX A - Drawings

1.	222-100T-1495	Canal Breach Option
2.	222-100T-1496	Corrugated Metal Pipe Option
3.	222-100T-1497	Concrete Box Culvert Option

Reference Drawings

4.	222-116-20476	Main Canal – Profile and Sections – Sta. 255+85.56 to Sta. 326+90.0
5.	222-D-15597	Main Canal – Sta. 318+80 – Transition
6.	222-D-15598	Main Canal – Sta. 325+61.08 - Transition

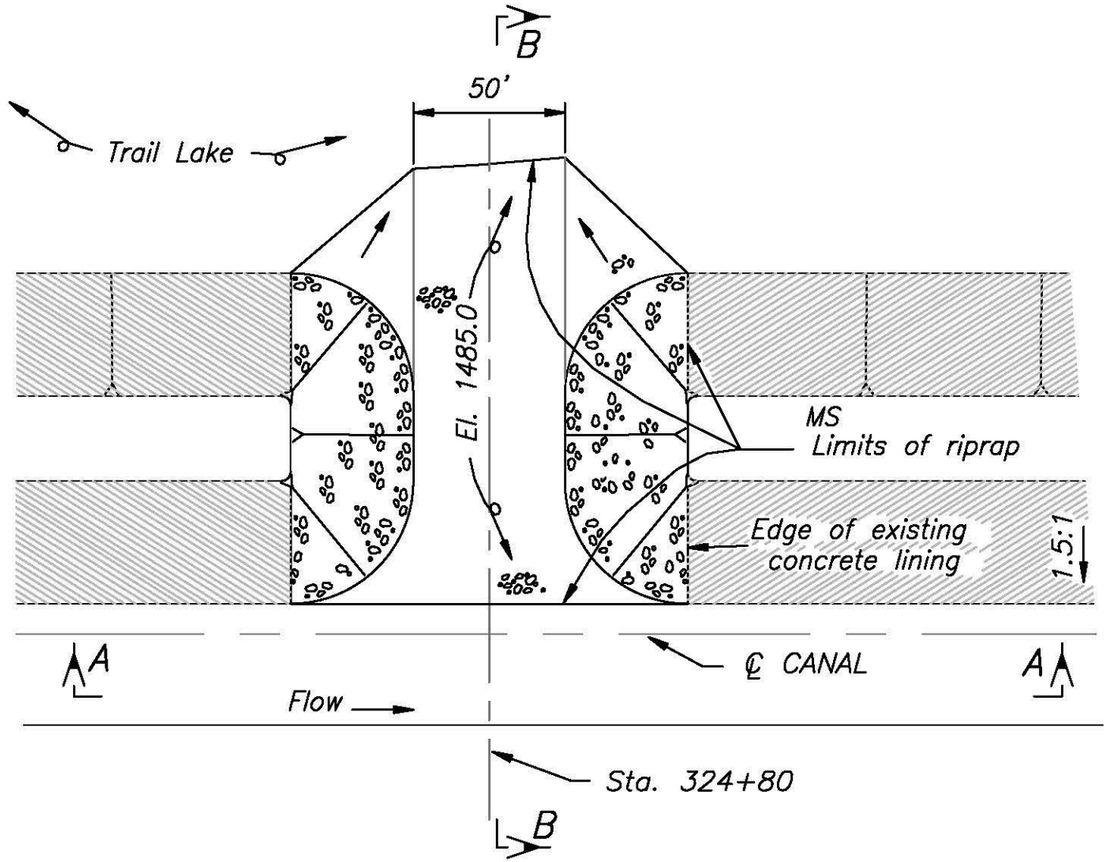

PLAN

0 50 100
SCALE OF FEET

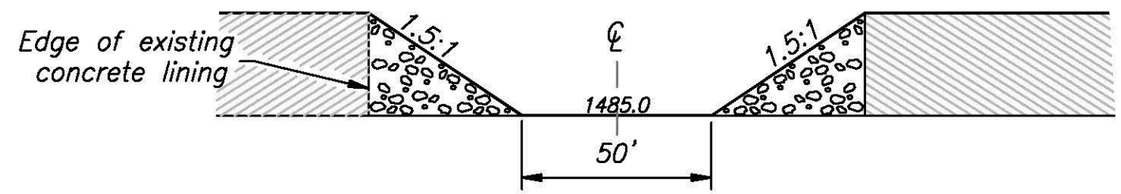

SECTION A – A

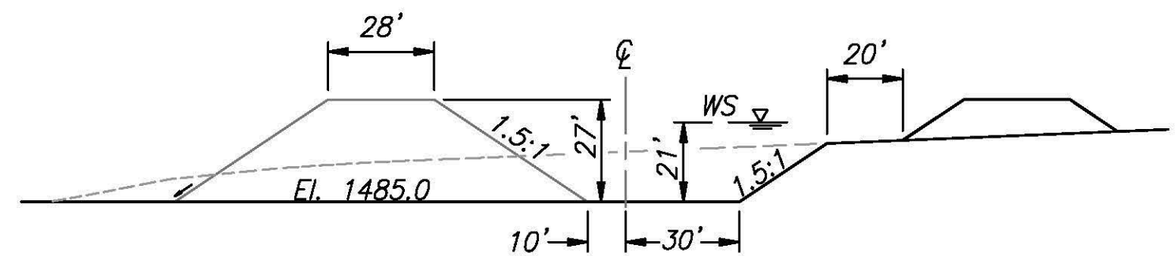

SECTION B – B

ALWAYS THINK **SAFETY**

UNITED STATES
DEPARTMENT OF THE INTERIOR
BUREAU OF RECLAMATION

COLUMBIA BASIN PROJECT – WASHINGTON

MAIN CANAL
TRAIL LAKE MODIFICATIONS

CANAL BREACH OPTION

PLAN and SECTIONS

Concept Designer: Steve Montague
Drafter: G.Grooms

Boise, Idaho 2005-12-22
SHEET 1 OF 1

222-100T-1495

AutoCAD
CAD FILENAME
Canal Breach Option.dwg
DATE AND TIME PLOTTED
2005-12-22
PLOTTED BY
GGrooms

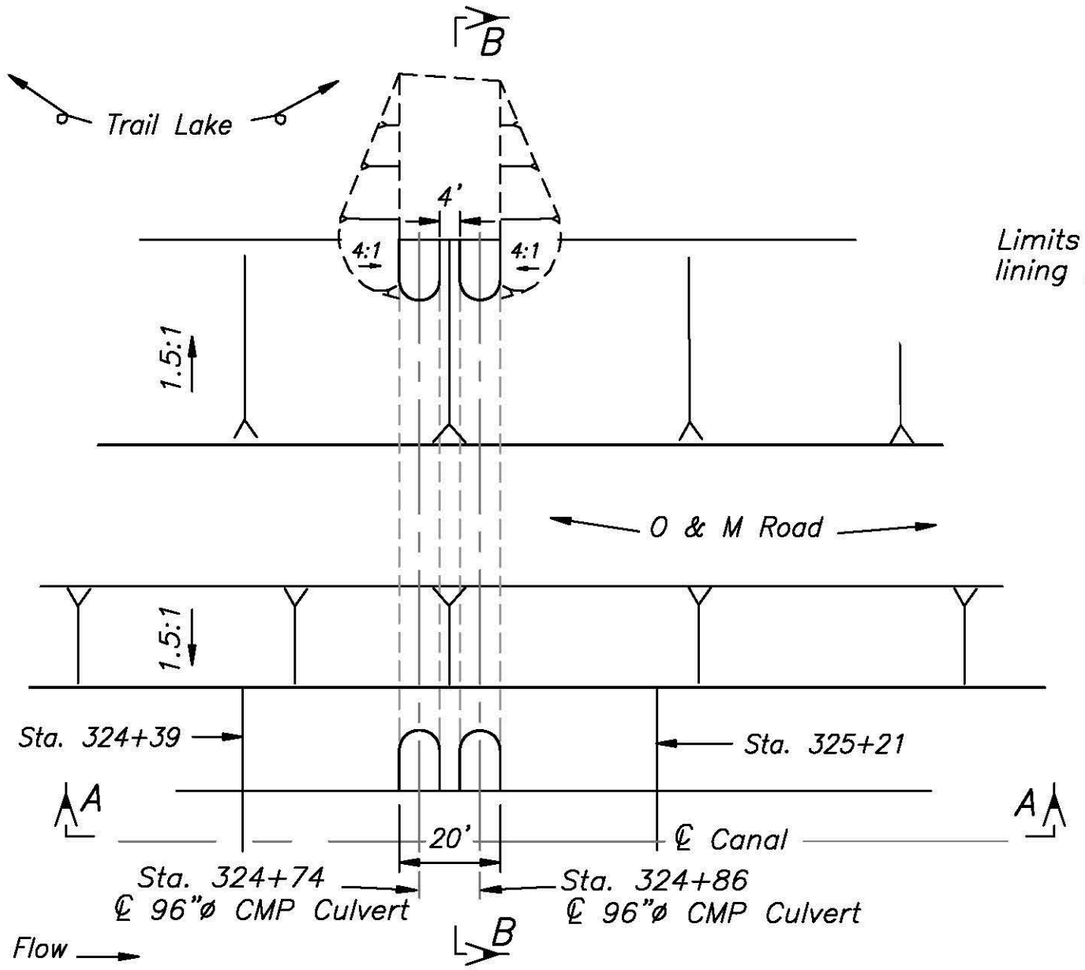

PLAN

30 0 30 60 90
SCALE OF FEET

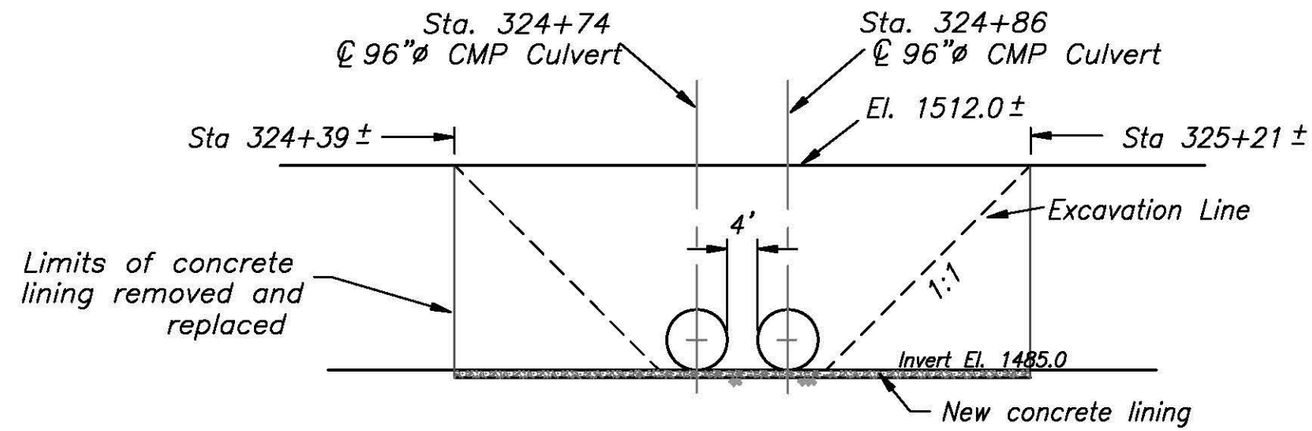

SECTION A – A

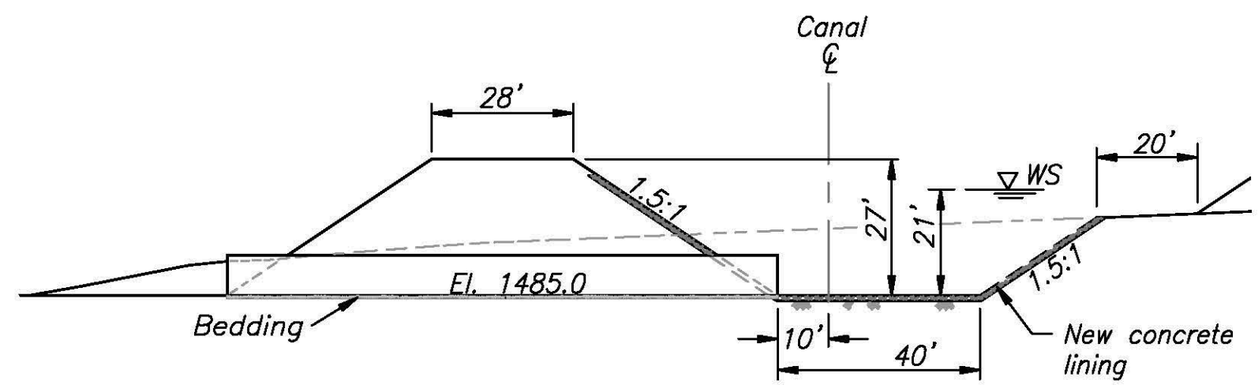

SECTION B – B

ALWAYS THINK **SAFETY**

UNITED STATES
DEPARTMENT OF THE INTERIOR
BUREAU OF RECLAMATION

COLUMBIA BASIN PROJECT – WASHINGTON

MAIN CANAL
TRAIL LAKE MODIFICATIONS
CORRUGATED METAL PIPE OPTION

PLAN and SECTIONS

Concept Designer: Steve Montague
Drafter: G.Grooms

Boise, Idaho 2005-12-22
SHEET 1 OF 1

222-100T-1496

AutoCAD CAD FILENAME CMP Option.dwg
DATE AND TIME PLOTTED 2005-12-22
PLOTTED BY GGrooms

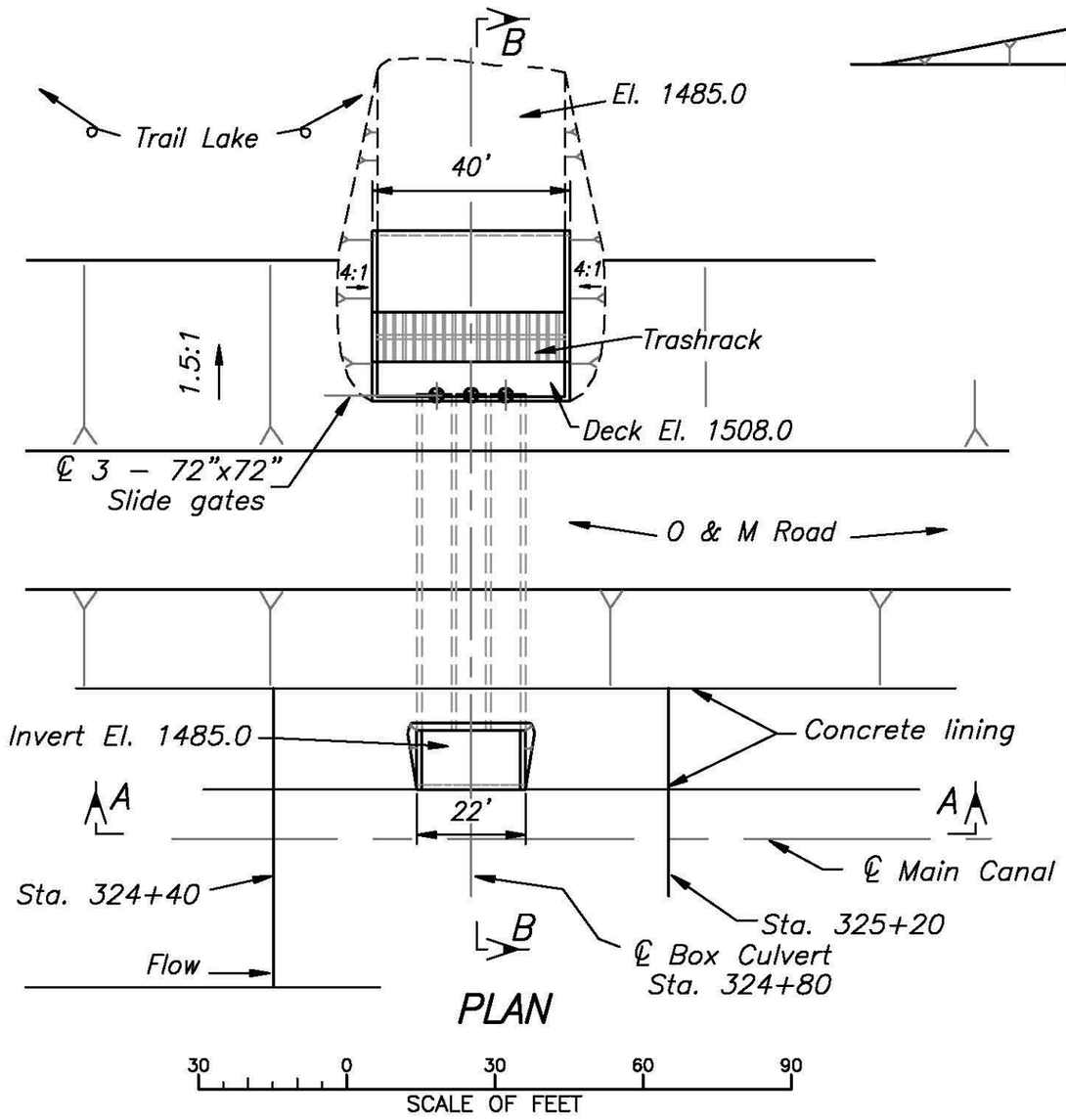

PLAN

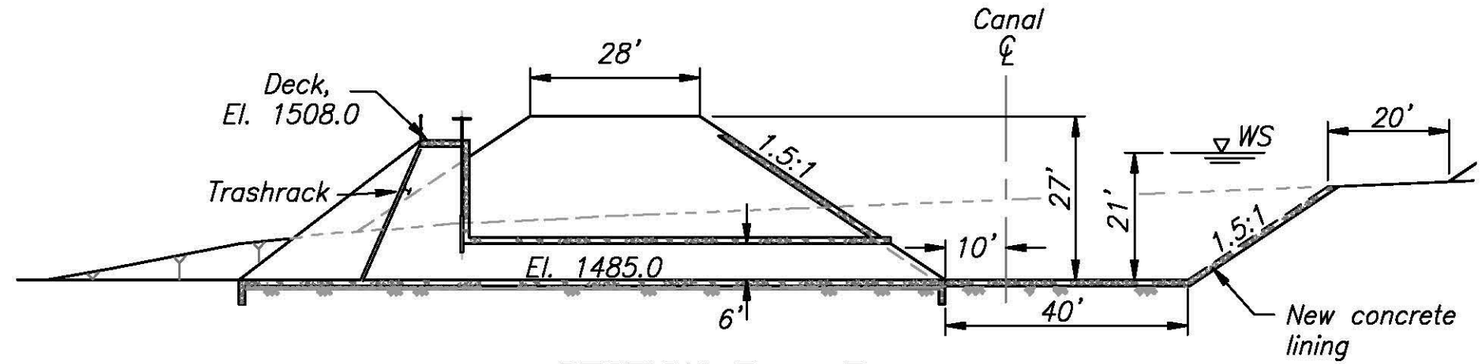

SECTION B – B

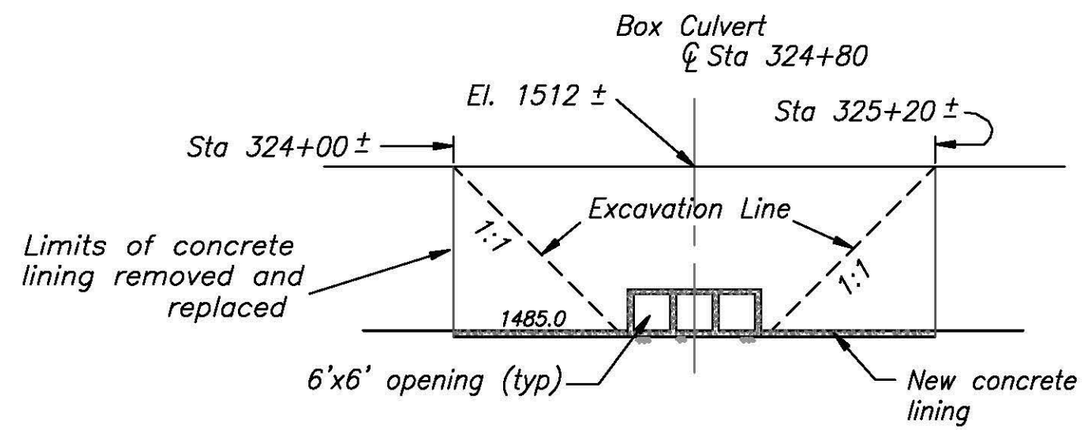

SECTION A – A

ALWAYS THINK **SAFETY**

UNITED STATES
DEPARTMENT OF THE INTERIOR
BUREAU OF RECLAMATION
COLUMBIA BASIN PROJECT – WASHINGTON

MAIN CANAL
TRAIL LAKE MODIFICATIONS
CONCRETE BOX CULVERT OPTION
PLAN AND SECTIONS

Concept Designer: Steve Montague
Drafter: G.Grooms

Boise, Idaho 2005–12–22
SHEET 1 OF 1

222–100T–1497

AutoCAD
CAD FILENAME
Box Culvert Option.dwg
DATE AND TIME PLOTTED
2005–12–22
PLOTTED BY
GGrooms

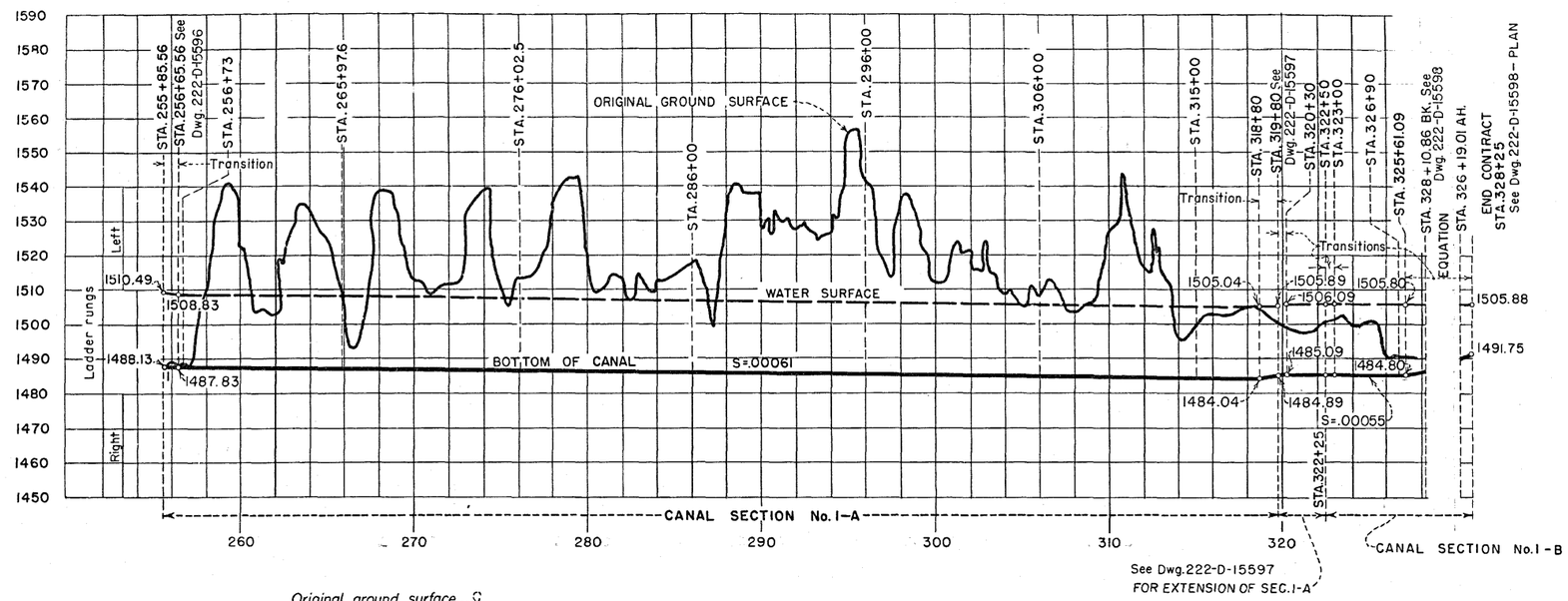

HYDRAULIC PROPERTIES								
SECTION	B	d	Area	r	S	V	Q	n
No. 1-A Lined	20	21.0	1081.50	11.30	.00061	12.21	13,200	.014
No. 1-B	40	21.0	Variable		.00055		13,200	.0225(Av.)

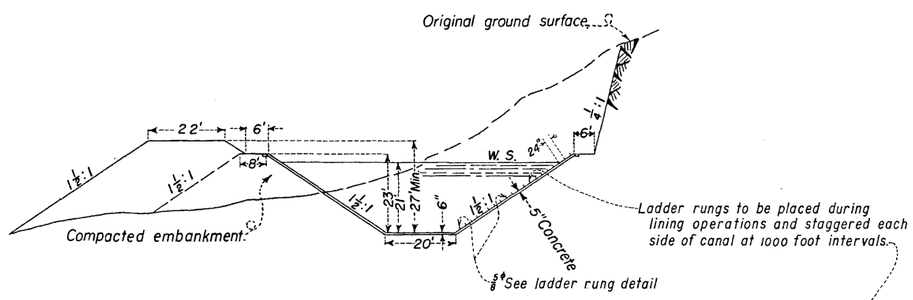

SECTION No. 1-A
TYPICAL CANAL SECTION

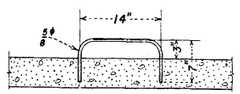

LADDER RUNG DETAIL

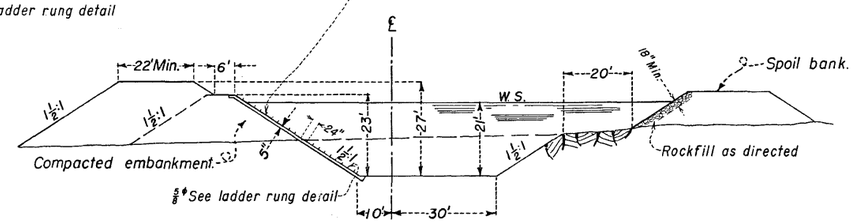

SECTION No. 1-B
TYPICAL CANAL SECTION

1 - 20 - 56 D Z.P.W.	AS BUILT BY 116- LTR. 1-26-54

UNITED STATES
DEPARTMENT OF THE INTERIOR
BUREAU OF RECLAMATION
COLUMBIA BASIN PROJECT - WASHINGTON
MAIN CANAL
PROFILE AND SECTIONS
STA. 255 + 85.56 TO STA. 326 + 90.0

DRAWN H.O. SUBMITTED
TRACED J.B.P. RECOMMENDED
CHECKED APPROVED CHIEF ENGINEER

1-20-54 116

EPHRATA, WASH. JULY 12, 1950

222-116-20476

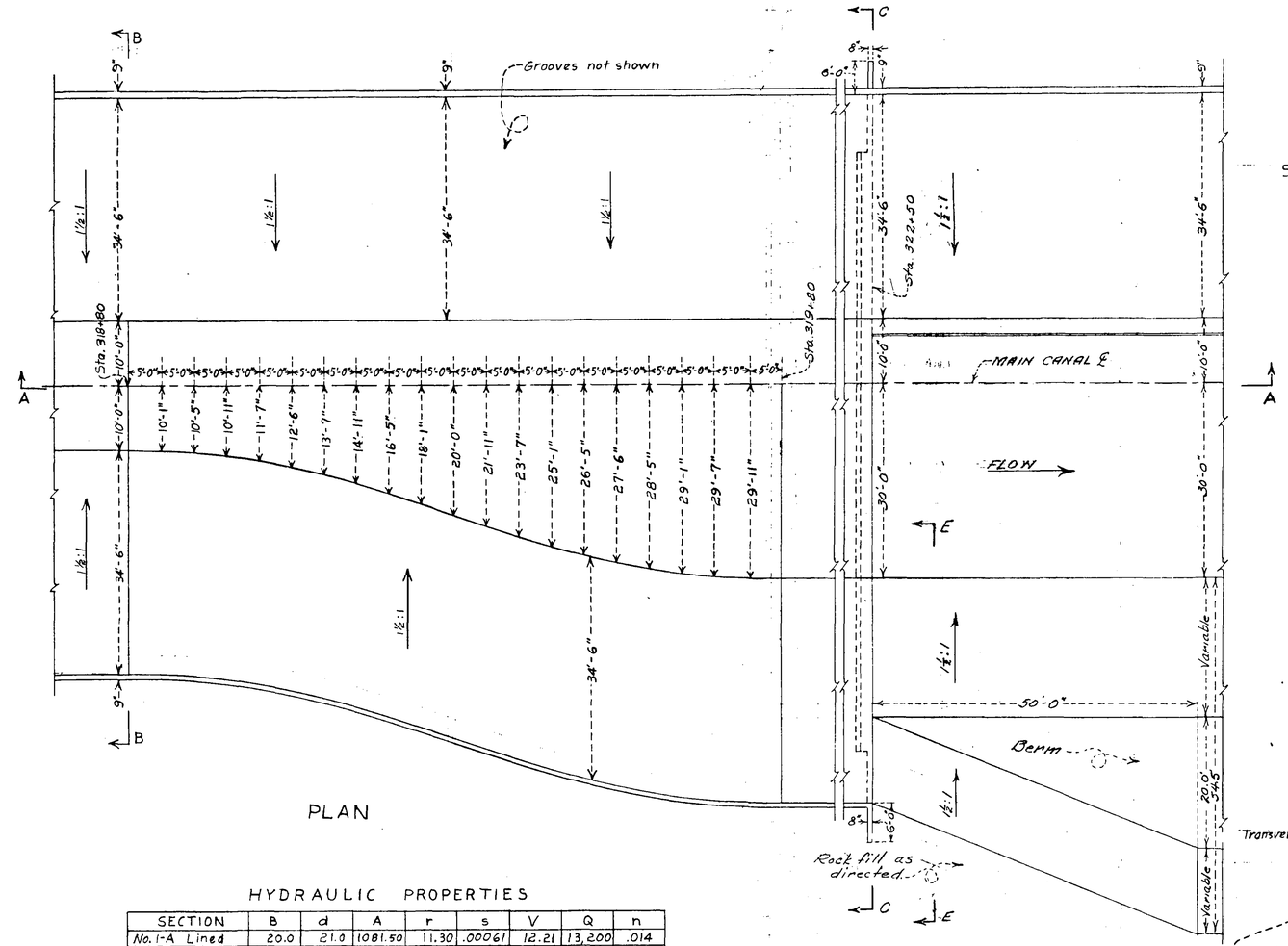

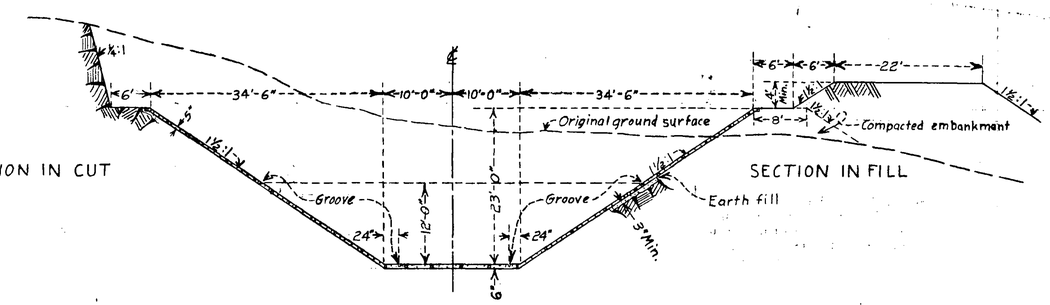

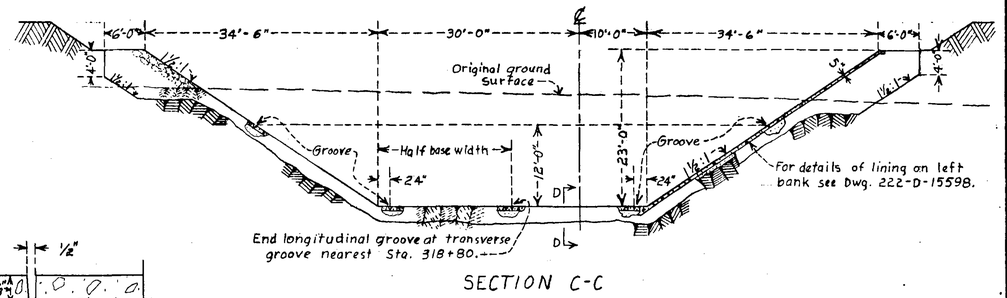

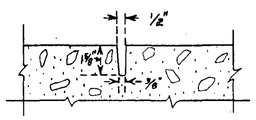

ESTIMATED QUANTITIES

Sta. 318+80 to Sta. 319+80

Concrete _____ 200 cu. yds.

NOTES

Longitudinal grooves as shown. Transverse grooves are to be placed at 25' centers on ℄ of Main Canal.

HYDRAULIC PROPERTIES

SECTION	B	d	A	r	s	V	Q	n
No. 1-A Lined	20.0	21.0	1081.50	11.30	.00061	12.21	13,200	.014
No. 1-B Unlined	40.0	21.0	Variable		.00055		13,200	.0225 (Ave.)

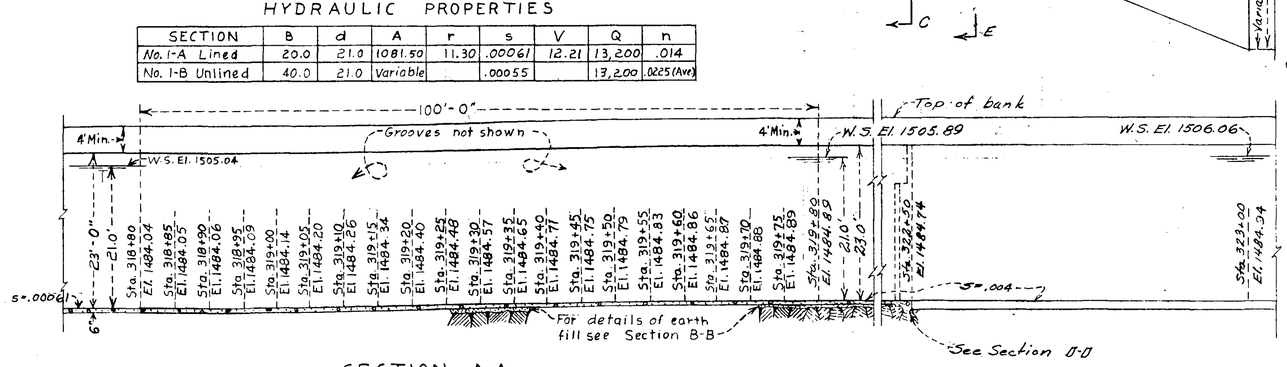

SECTION A-A

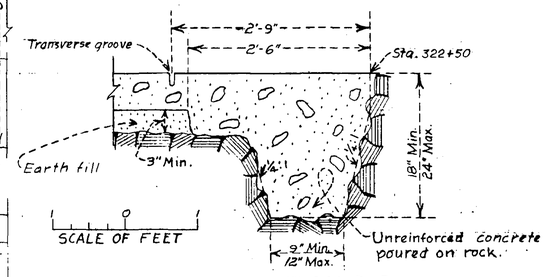

SECTION D-D
(FOR BOTTOM CUTOFF ONLY)
(SEE SECT. C-C 222-D-15596)
FOR SIDE SLOPE)

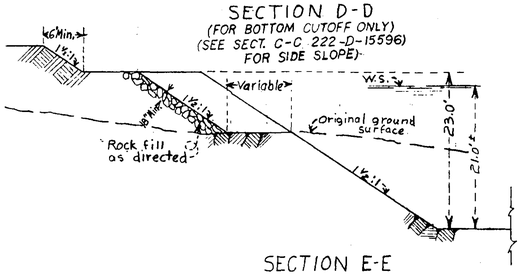

SECTION E-E

1-20-56 O.E.P.W. AS BUILT BY 118-F2-R 1-26-54

UNITED STATES
DEPARTMENT OF THE INTERIOR
BUREAU OF RECLAMATION
COLUMBIA BASIN PROJECT - WASHINGTON
MAIN CANAL - STA. 318+80
TRANSITION

DRAWN J.D.S. SUBMITTED
TRACED RECOMMENDED
CHECKED APPROVED
CHIEF ENGINEER

DENVER, COLO AUG. 14, 1950 222-D-15597

See Detail C-C Dwg. 222-D-15598.

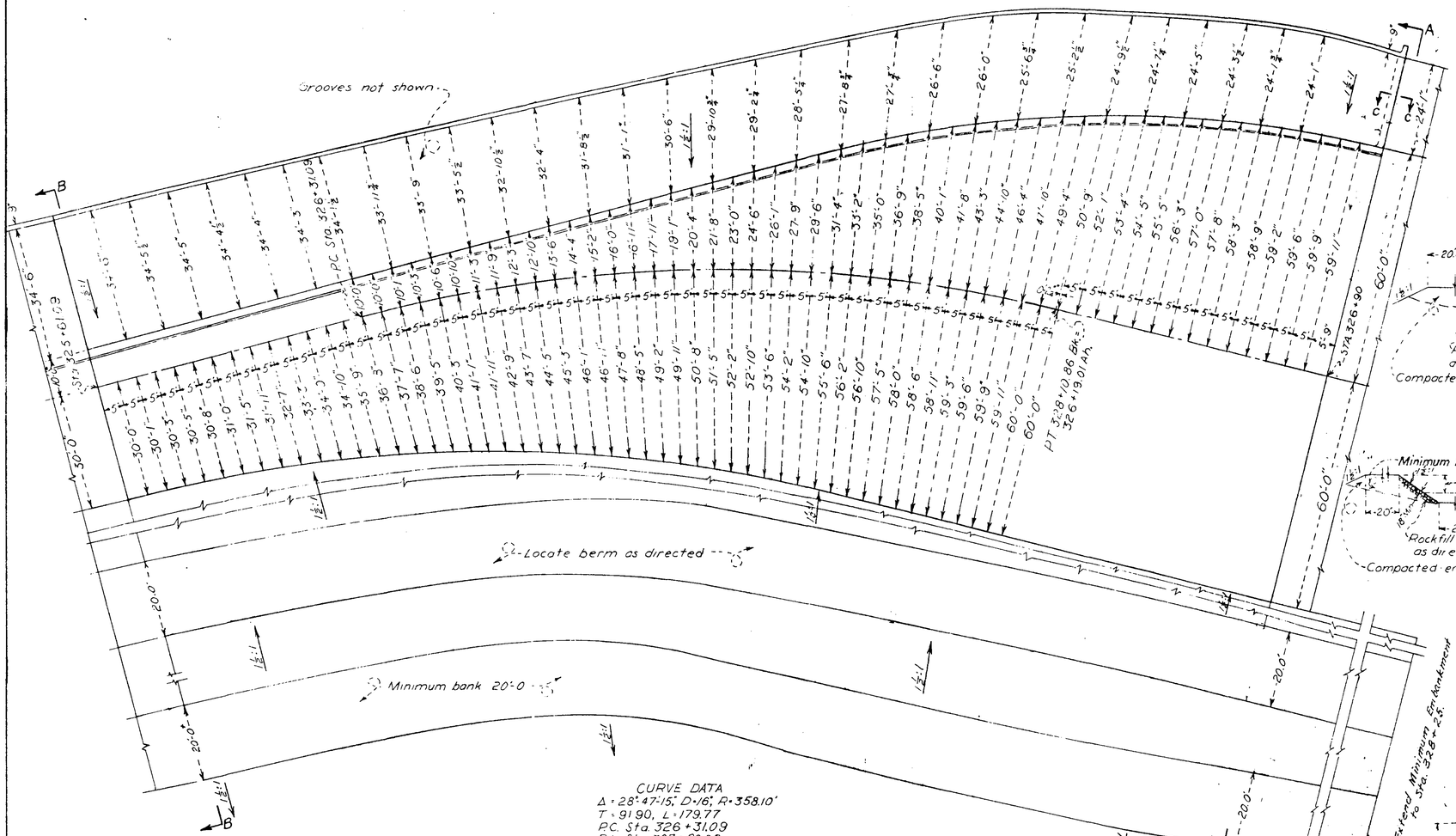

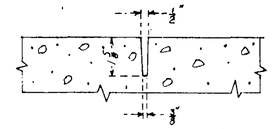

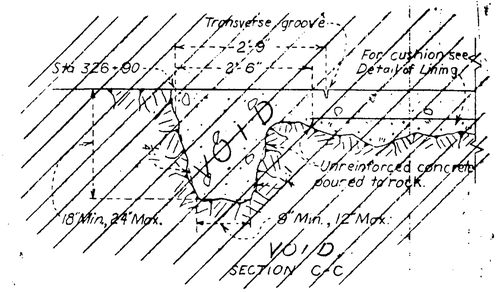

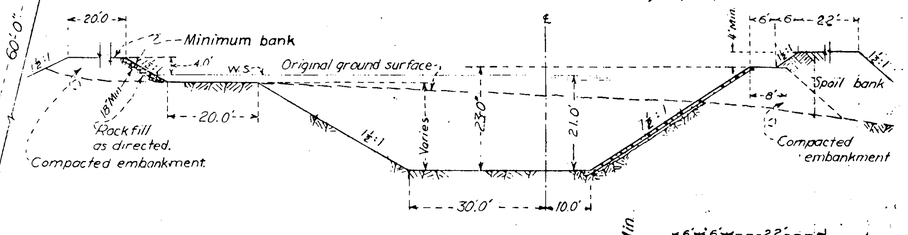

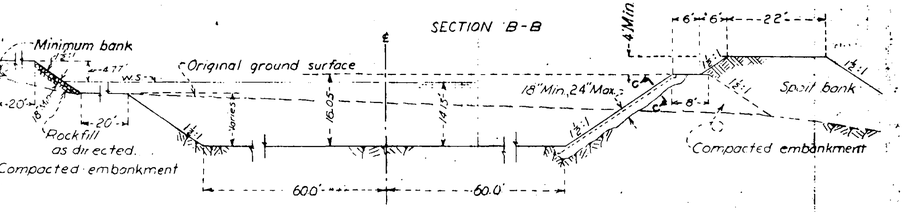

ESTIMATED QUANTITIES
(Sta 325+61.09 to Sta 326+90)
Concrete ..... 250 cu. yd.

NOTES

Transverse dimensions and side slopes are radial. Stations and longitudinal dimensions are on ℄ Main Canal.
Longitudinal groove as shown. Transverse grooves are to be placed radially at 25' centers on ℄ Main Canal.

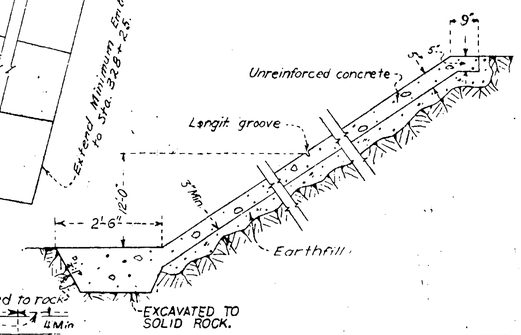

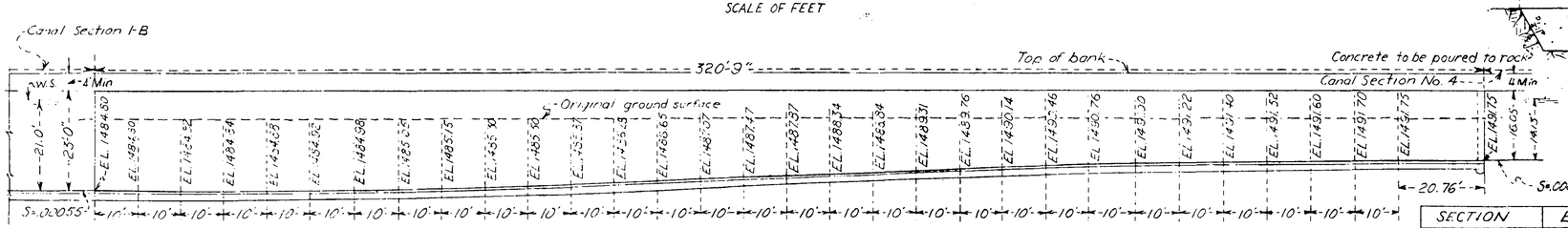

HYDRAULIC PROPERTIES

SECTION	B	d	A	r	s	V	Q	n
No. 1-B Unlined	40.0	21.0	Variable		.00055		13,200	.022 (Ave)
No. 4 Unlined	120.0	14.13	1995.09	11.67	.00065	6.125	13,200	.030

1-20-56 D. E. P. (W.) AS BUILT BY T16-LTR. 1-26-54

1:20.54 7/16 Rev. 4-6-51 KO.16 (CMC)

UNITED STATES
DEPARTMENT OF THE INTERIOR
BUREAU OF RECLAMATION
COLUMBIA BASIN PROJECT — WASHINGTON

MAIN CANAL - STA. 325+61.09

TRANSITION

DRAWN G.S. SUBMITTED A. B. Lange
TRACED RECOMMENDED C. E. Rice
CHECKED APPROVED L. N. McClellan
CHIEF ENGINEER
DENVER, COLORADO AUG. 17, 1950 222-D-15598

MICROFILMED NOV 1671 KEYPUNCHED

FEB 7 - 1958

APPENDIX B - Cost Estimates

Project: **Columbia Basin**
Feature: **Trail Lake** By: **S. Montague** 1/5/2006
Details: **Canal Breach Option** Checked by:

Item	Schedule	Est. Qty.	Unit	Unit Price	Amount
1	Mobilization & preparation work	Lump Sum	4.5%	ls	$5,500.00
2					
3	Concrete demolition of canal lining	80	CY	$35.00	$2,800.00
4					
5	Common excavation	6600	CY	$13.00	$85,800.00
6					
7	Riprap	280	CY	$50.00	$14,000.00
8					
9	Bedding for riprap	100	CY	$32.00	$3,200.00
10					
11					
12					
13					
14					
15					
16					
17					
18					
19					
20					
21					
22					
23					
24					
25					
26					
27					
28					
29					
30					
31					
32					
33					
34					
35					
36					
37					
38					
39	Allowance for unlisted items	Lump Sum	15%	ls	$16,000.00

TOTAL FOR SCHEDULE		$127,300.00
Contingencies @	25%	$31,700.00
FIELD COST		$159,000.00
Noncontract Costs @	40%	$61,000.00
TOTAL CONSTRUCTION COST		$220,000.00

file: H:\PROJECTS\Columbia Basin\Trail Lake\[Scott's Estimate Worksheet - Canal Breach Option.xls]Sheet1

Project: **Columbia Basin**
Feature: **Trail Lake** By: **S. Montague** 1/5/2006
Details: **CMP Culvert Option** Checked by:

Item	Schedule	Est. Qty.	Unit	Unit Price	Amount
1	Mobilization & preparation work	Lump Sum	4.5%	ls	$22,300.00
2					
3	Concrete demolition of canal lining	53	CY	$35.00	$1,855.00
4					
5	Common excavation	6,200	CY	$13.00	$80,600.00
6					
7	CMP - 96" dia. X 110' long	2	ea	$46,200.00	$92,400.00
8					
9	Compacted backfill	6,000	CY	$24.00	$144,000.00
10					
11	Concrete for canal lining	150	CY	$750.00	$112,500.00
12					
13					
14					
15					
16					
17					
18					
19					
20					
21					
22					
23					
24					
25					
26					
27					
28					
29					
30					
31					
32					
33					
34					
35					
36					
37					
38					
39	Allowance for unlisted items	Lump Sum	15%	ls	$65,000.00

TOTAL FOR SCHEDULE		$518,655.00
Contingencies @	25%	$129,345.00
FIELD COST		$648,000.00
Noncontract Costs @	40%	$262,000.00
TOTAL CONSTRUCTION COST		$910,000.00

Project: **Columbia Basin**
Feature: **Trail Lake** By: **S. Montague** 1/5/2006
Details: **Concrete Box Culvert Option** Checked by:

Item	Schedule	Est. Qty.	Unit	Unit Price	Amount
1	Mobilization & preparation work	Lump Sum	4.5%	ls	53,400.00
2					
3	Concrete demolition of canal lining	52	CY	$35.00	1,820.00
4					
5	Common excavation	6,200	CY	$13.00	80,600.00
6					
7	Concrete in box culvert structure	390	CY	$935.00	364,650.00
8					
9	Compacted backfill	4,800	CY	$24.00	115,200.00
10					
11	Steel for trashrack and handrails	46,000	lbs.	$7.00	322,000.00
12					
13	72" X 72" Slide gates	2	ea	$17,500.00	35,000.00
14					
15	Concrete for canal lining	150	CY	$750.00	112,500.00
16					
17					
18					
19					
20					
21					
22					
23					
24					
25					
26					
27					
28					
29					
30					
31					
32					
33					
34					
35					
36					
37					
38					
39	Allowance for unlisted items	Lump Sum	15%	ls	155,000.00

TOTAL FOR SCHEDULE		1,240,170.00
Contingencies @	25%	309,830.00
FIELD COST		1,550,000.00
Noncontract Costs @	40%	620,000.00
TOTAL CONSTRUCTION COST		2,170,000.00