COLUMBIA BASIN PROJECT - IRRIGATION BLOCK 70

GRANT COUNTY, WASHINGTON

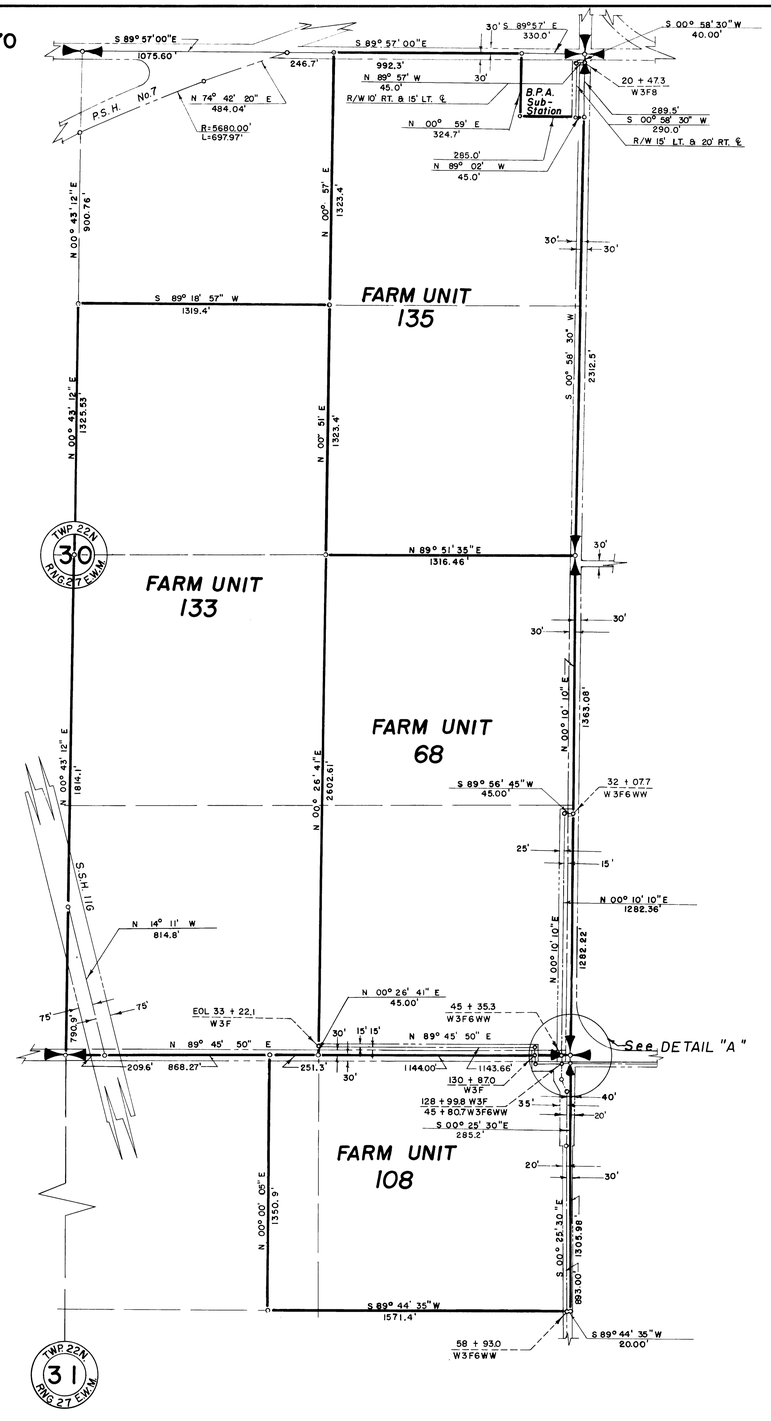

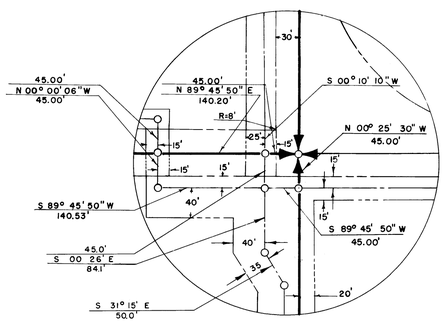

DETAIL "A"

500 4 3 2 1 0 2 4 6 8 1,000

SCALE OF FEET

LEGEND

- Boundaries of Farm Units
- Rights of Way for Roads
- Rights of Way for Canals
- Rights of Way for Drains

Drawn D.M.P.
Checked C.N.Y.
Surveys certifed

A.J. Davidson
Chief, Engr. Div.

DATE 12-11-62

I certify that this is Sheet 5 of 9 Supplemental Sheets of the Ninth Revision of the Final Farm Unit Plat of Irrigation Block 70.

M.B. Austin
Regional Director (Acting)

DATE 12-20-62

222-116-32561-13

14 19 20