16

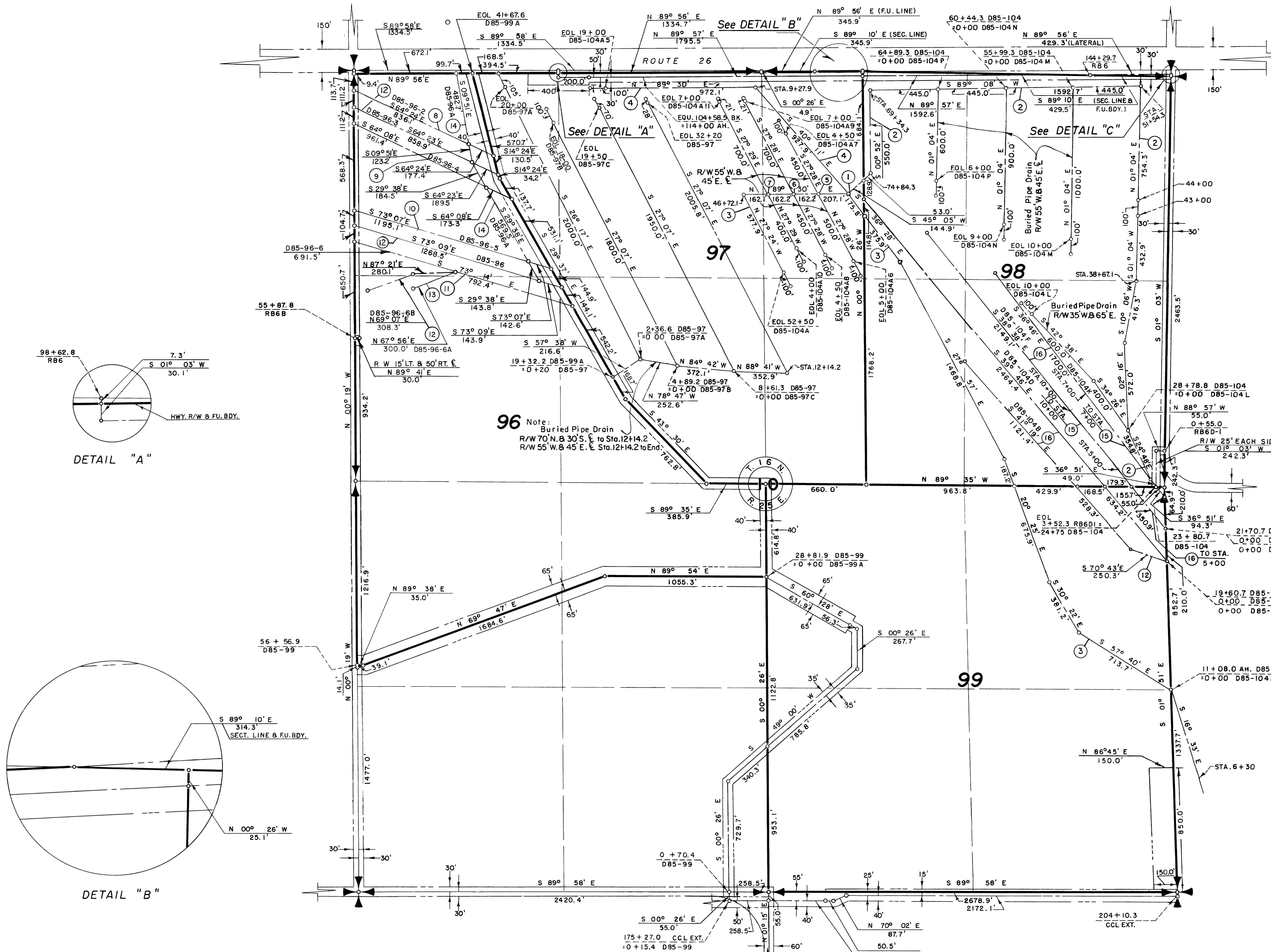

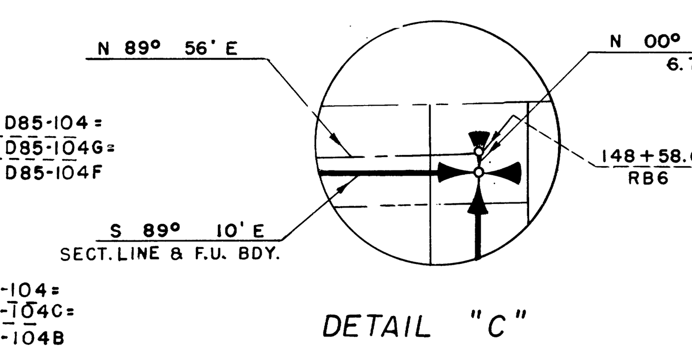

18

① 76+82.2 D85-104 = 39+78.5 D85-104A = 0+00 D85-104A5

② BURIED PIPE DRAIN (D85-104)
R/W 45'W. & 55'E. ℄ STA.6+30 TO 28+78.8
R/W 65'W. & 55'E. ℄ STA.28+78.8 TO 38+67.1
R/W 55'W. & 45'E. ℄ STA.38+67.1 TO 51+54.3
R/W TO LAT. N. & 65'S. ℄ STA.51+54.3 TO 69+34.3
R/W 30'W. & 70'E. ℄ STA.69+34.3 TO 74+84.3
R/W 45'W. & 55'E. ℄ STA.74+84.3 TO 76+82.2

③ BURIED PIPE DRAIN (D85-104A)
R/W 45'W. & 55'E. ℄ STA.11+08.0 TO 39+78.5
R/W 55'N. & 45'S. ℄ STA.39+78.5 TO 46+72.1
R/W 55'W. & 45'E. ℄ STA.46+72.1 TO END.

④ BURIED PIPE DRAIN (D85-104A5)
R/W 55'W. & 45'E. ℄ TO STA.9+27.9
R/W 30' OR TO LAT. N. & 70'S. ℄ STA.9+27.9 TO END.

⑤ 0+00 D85-104A7 = 41+85.6 D85-104A = 0+00 D85-104A6

⑥ 0+00 D85-104A9 = 43+47.8 D85-104A = 0+00 D85-104A8

⑦ 0+00 D85-104A11 = 45+10.0 D85-104A = 0+00 D85-104A10

NOTE: Buried Pipe Drain R/W

⑧ 45'N. TO D85-96-3 S.
⑨ 55'S. TO D85-96-3 N.
⑩ 45'N. TO D85-96 S.
⑪ 55'S. TO D85-96 N.
⑫ 45'N. & 55'S.
⑬ 55'S. TO D85-96-6B N.
⑭ 55'W. TO DRAIN E.
⑮ 75'W. & 75'E.
⑯ 55'W. & 45'E.

REV. TO 12-16-82	dc
REV. TO 4-17-75	dc
REV. TO 12-28-73	dc
REV. TO 9-1-65	[signature]

LEGEND

- Boundaries of Units
- Rights of Way for Roads
- Rights of Way for Canals
- Rights of Way for Drains

97 Unit Number

400 3 2 1 0 2 400
SCALE OF FEET

N
U.S.B.R. GRID

Drawn O.K.O.
Checked J.L.R.
Surveys certified
A.J. Davidson
Chief, Engr. Div.
DATE 7-8-60

I certify that this is Sheet 3 of 5 Supplemental Sheets of the Third Revision of the Final Farm Unit Plat of Irrigation Block 85.

M.B. Austin
Regional Director (Act.)
DATE 7-22-60

222-116-31631-17