DIST.	COUNTY	ROUTE	POST MILES TOTAL PROJECT
2	Sha		

MWH AMERICAS, INC.
3321 POWER INN ROAD, SUITE 300
SACRAMENTO, CA 95826-3889

MGE ENGINEERING, INC.
7415 GREENHAVEN DRIVE, SUITE 100
SACRAMENTO, CA 95831

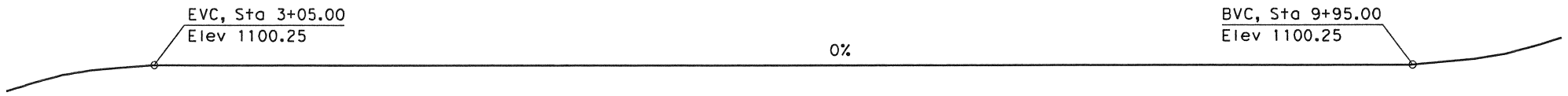

PROFILE GRADE

No Scale

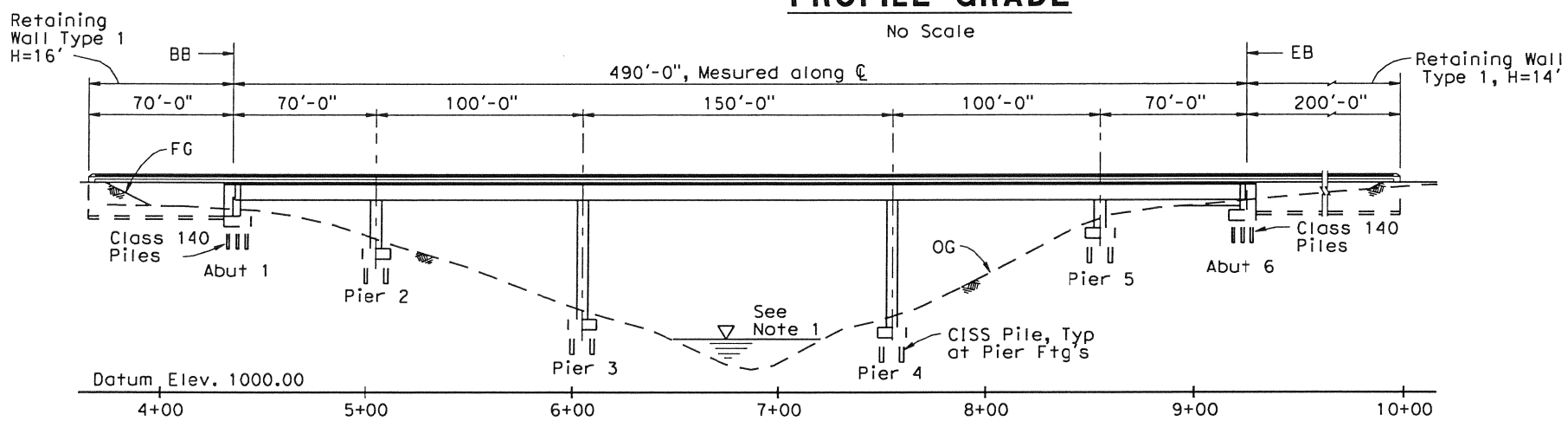

DEVELOPED ELEVATION

1" = 40'-0"

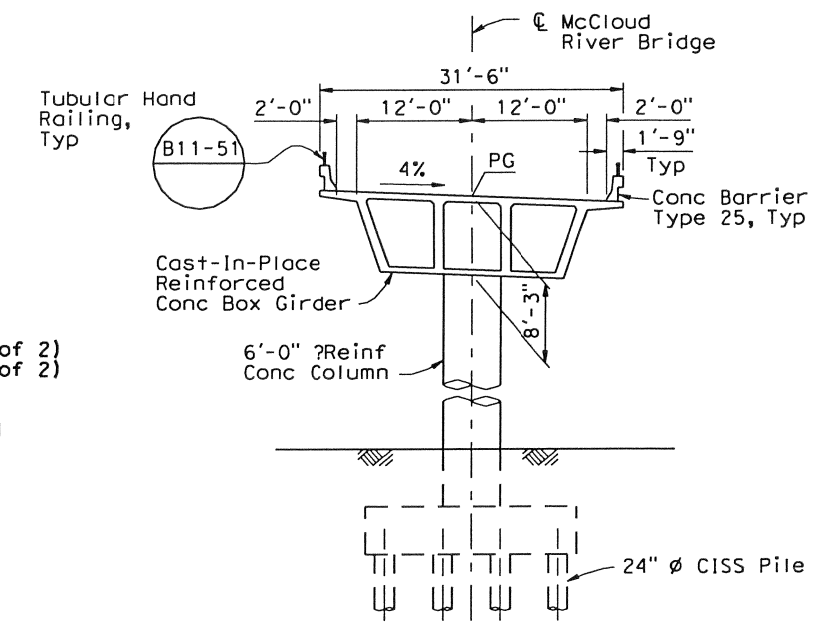

TYPICAL SECTION

1" = 10'-0"

STANDARD PLANS
Dated May 2006

A10A	Acronyms and Abbreviations (Sheet 1 of 2)
A10B	Acronyms and Abbreviations (Sheet 2 of 2)
A10C	Symbols (Sheet 1 of 2)
A10D	Symbols (Sheet 2 of 2)
A62C	Limits of Payment for Excavation and Backfill - Bridge
B0-1	Bridge Details
B0-3	Bridge Details
B0-5	Bridge Details
B0-13	Bridge Details
B2-5	Pile Details Class 90 and Class 140
B3-1	Retaining Wall Type 1 H=4' Through 30'
B3-8	Retaining Wall Details No. 1
B3-9	Retaining Wall Details No. 2
B7-1	Box Girder Details
B7-5	Deck Drains
B11-51	Tubular Hand Railing
B11-53	Concrete Barrier Type 25

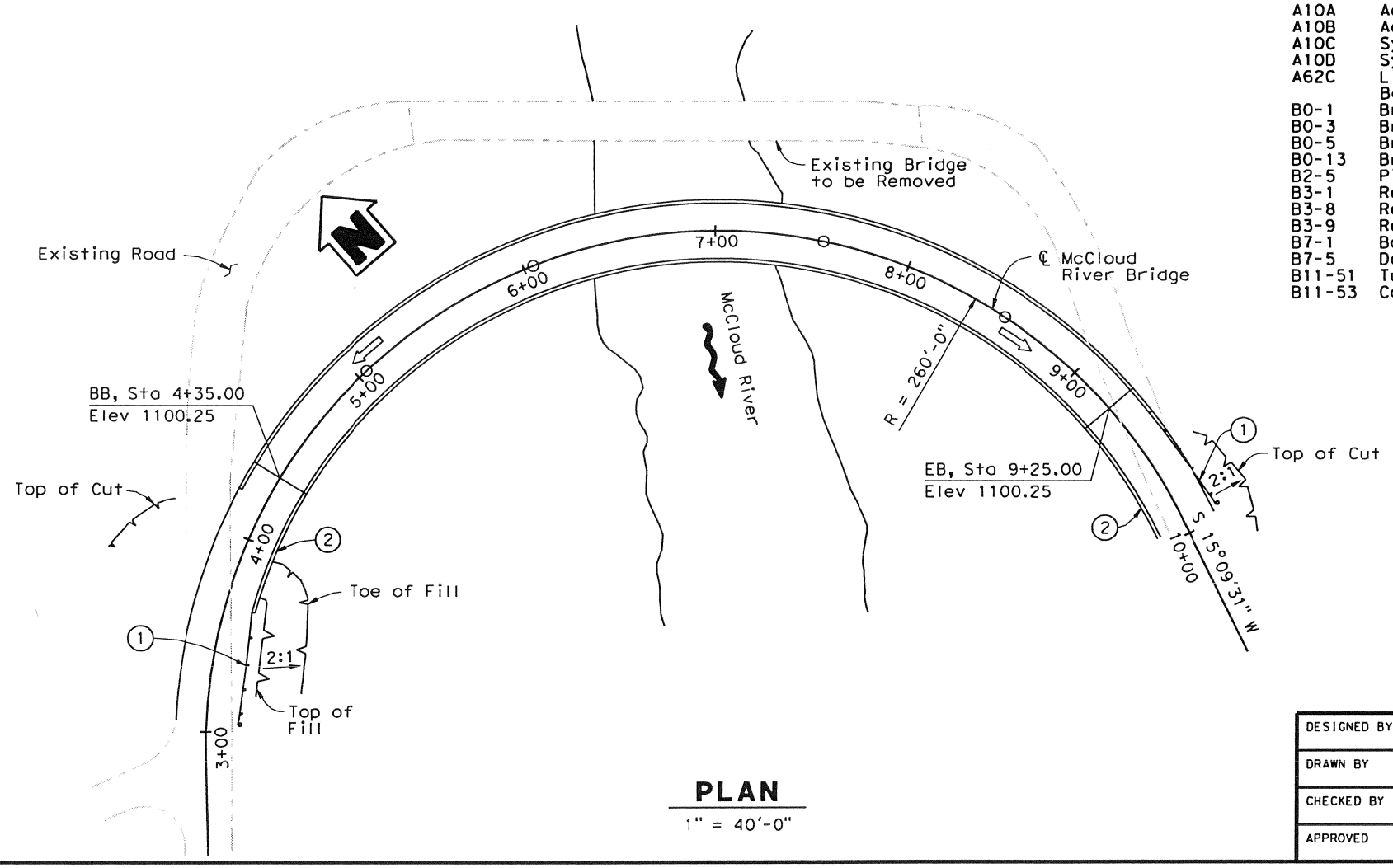

PLAN

1" = 40'-0"

LEGEND

- Indicates Direction of Flow
- Indicates Direction of Travel
- (1) Indicates MBGR, See "Road Plans"
- (2) Indicates Retaining Wall

Note:

1. Gross pool elevation 1087.50 feet (NGVD 1929).

DESIGNED BY G. Xu	DATE 7/1/2008	Guoping Xu PROJECT ENGINEER	ADVANCE PLANNING STUDY
DRAWN BY P. Zhao	DATE 7/1/2008		McCLOUD RIVER BRIDGE
CHECKED BY R. Sennett	DATE 7/1/2008		BRIDGE NO.
APPROVED R. Sennett	DATE 7/1/2008		SCALE: As Shown — Plate 29

FILE => $REQUEST

USERNAME => $USER DATE PLOTTED => $DATE TIME PLOTTED => $TIME

DIST.	COUNTY	ROUTE	POST MILES TOTAL PROJECT
2	Sha		

MWH AMERICAS, INC.
3321 POWER INN ROAD, SUITE 300
SACRAMENTO, CA 95826-3889

MGE ENGINEERING, INC.
7415 GREENHAVEN DRIVE, SUITE 100
SACRAMENTO, CA 95831

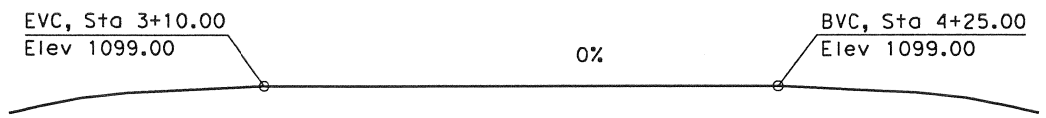

PROFILE GRADE

No Scale

LEGEND

- Indicates Direction of Flow
- Indicates Direction of Travel
- (1) Indicates MBGR, See "Road Plans"
- (2) Indicates Retaining Wall

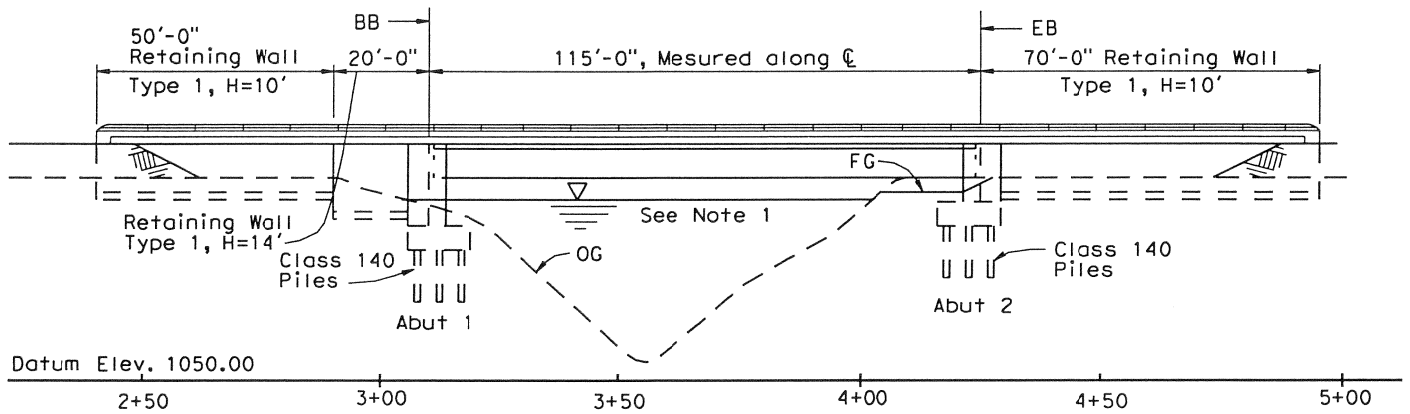

DEVELOPED ELEVATION

1" = 20'-0"

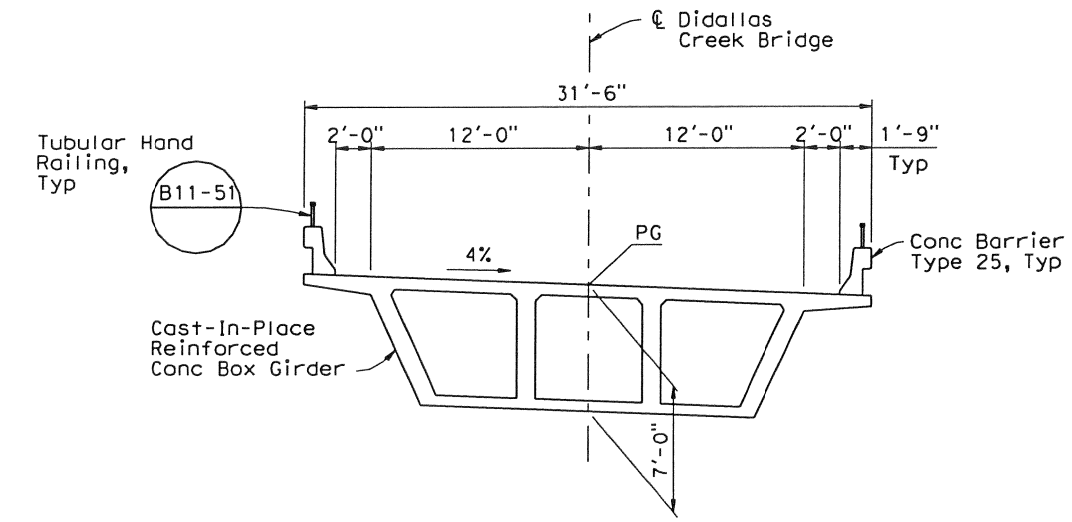

TYPICAL SECTION

3/16" = 1'-0"

STANDARD PLANS
Dated May 2006

A10A	Acronyms and Abbreviations (Sheet 1 of 2)
A10B	Acronyms and Abbreviations (Sheet 2 of 2)
A10C	Symbols (Sheet 1 of 2)
A10D	Symbols (Sheet 2 of 2)
A62C	Limits of Payment for Excavation and Backfill - Bridge
B0-1	Bridge Details
B0-3	Bridge Details
B0-5	Bridge Details
B0-13	Bridge Details
B2-5	Pile Details Class 90 and Class 140
B3-1	Retaining Wall Type 1 H=4' Through 30'
B3-8	Retaining Wall Details No. 1
B3-9	Retaining Wall Details No. 2
B7-1	Box Girder Details
B7-5	Deck Drains
B11-51	Tubular Hand Railing
B11-53	Concrete Barrier Type 25

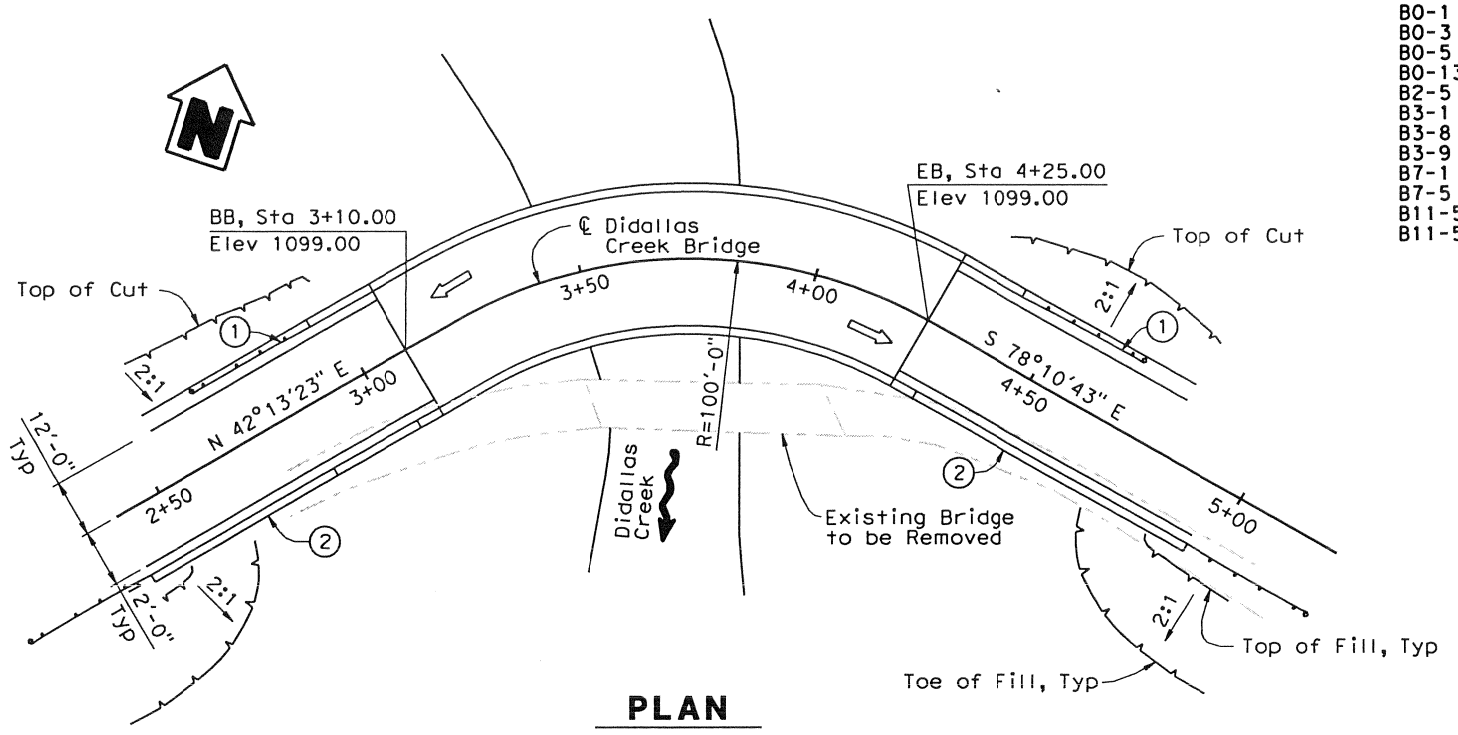

PLAN

1" = 20'-0"

Note:

1. Gross pool elevation 1087.50 feet (NAVG 1929)

DESIGNED BY G. Xu	DATE 7/1/2008	Guoping Xu PROJECT ENGINEER	ADVANCE PLANNING STUDY
DRAWN BY P. Zhao	DATE 7/1/2008		DIDALLAS CREEK BRIDGE
CHECKED BY R. Sennett	DATE 7/1/2008		BRIDGE NO.
APPROVED R. Sennett	DATE 7/1/2008		SCALE: As Shown — Plate 30

FILE => $REQUEST

USERNAME => $USER DATE PLOTTED => $DATE TIME PLOTTED => $TIME

DIST.	COUNTY	ROUTE	POST MILES TOTAL PROJECT
2	Sha		

MWH AMERICAS, INC.
3321 POWER INN ROAD, SUITE 300
SACRAMENTO, CA 95826-3889

MGE ENGINEERING, INC.
7415 GREENHAVEN DRIVE, SUITE 100
SACRAMENTO, CA 95831

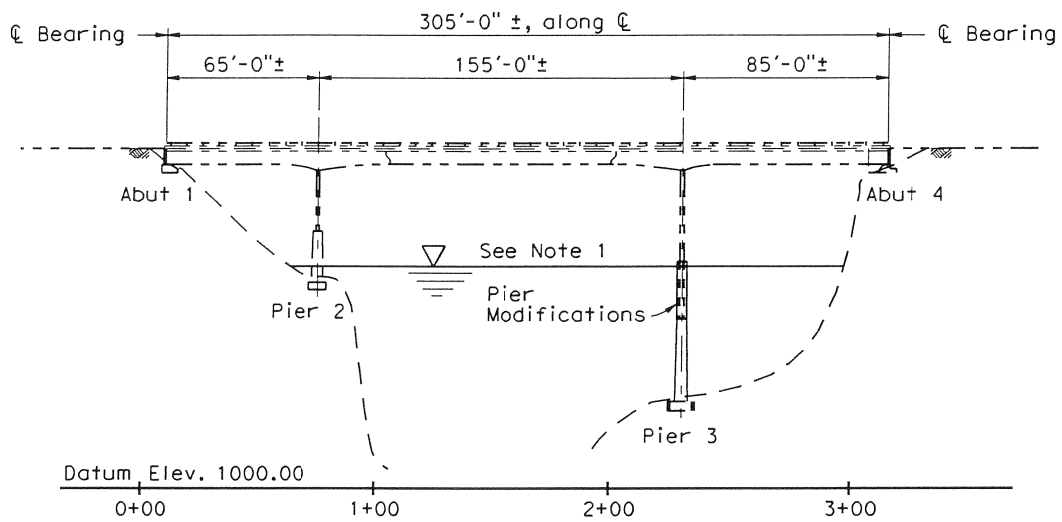

ELEVATION
1" = 40'-0"

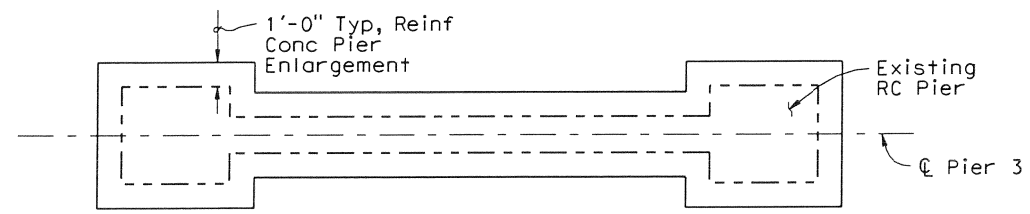

SECTION A
1/4" = 1'-0"

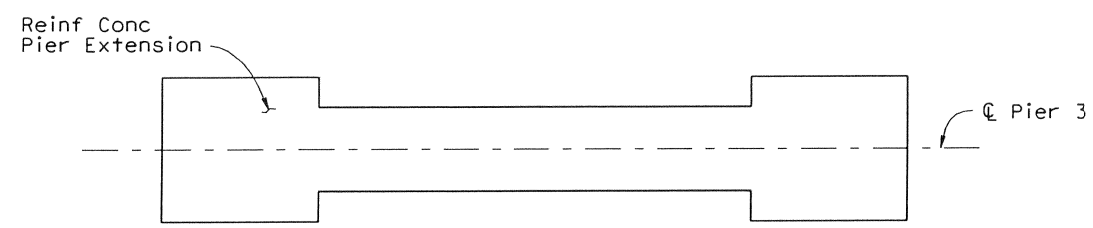

SECTION B
1/4" = 1'-0"

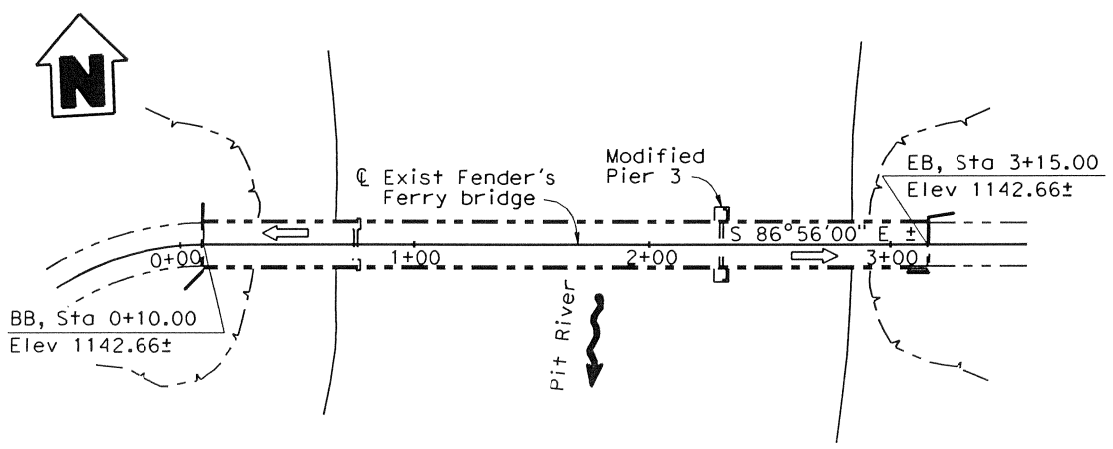

PLAN
1" = 40'-0"

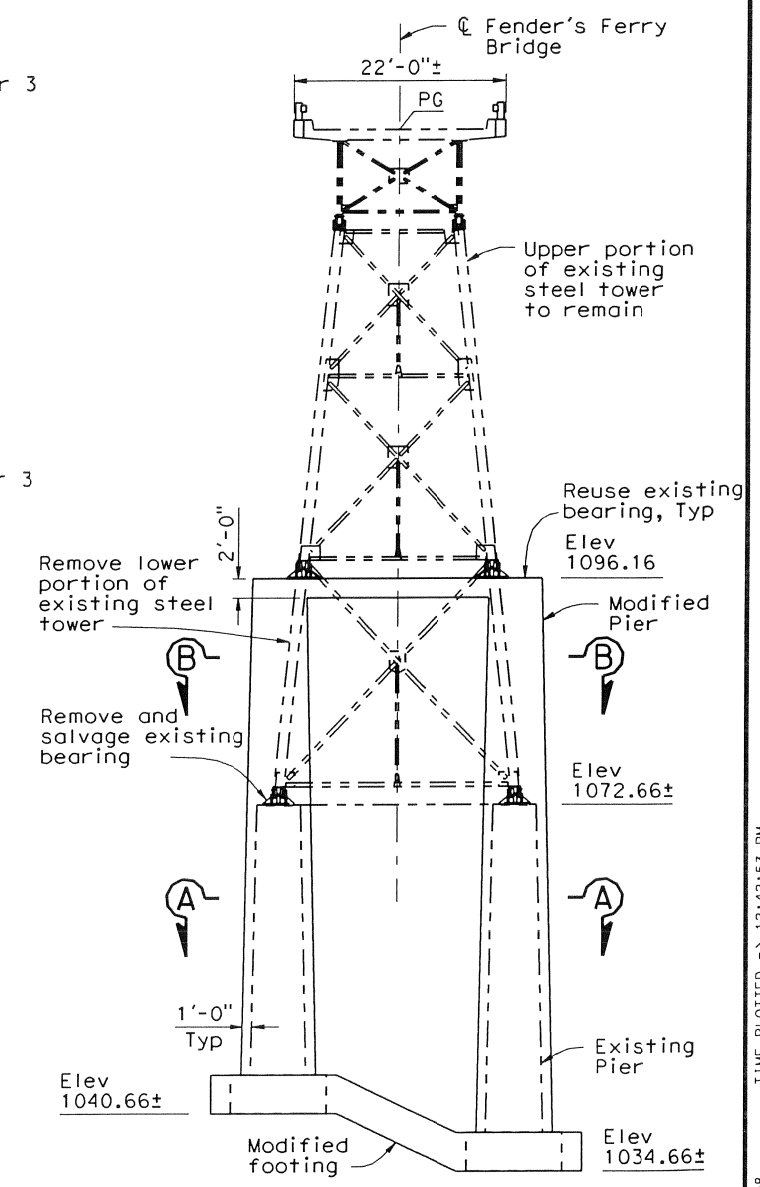

PIER 3 ELEVATION
1" = 10'-0"

LEGEND

- Indicates Direction of Flow
- Indicates Direction of Travel
- Indicates existing construction
- Indicates new construction

Note:

1. Gross pool elevation 1087.50 feet (NAVG 1929).

STANDARD PLANS
Dated May 2006

A10A Acronyms and Abbreviations (Sheet 1 of 2)
A10B Acronyms and Abbreviations (Sheet 2 of 2)

DESIGNED BY G. Xu	DATE 6/9/2008	Guoping Xu PROJECT ENGINEER	ADVANCE PLANNING STUDY
DRAWN BY P. Zhao	DATE 6/9/2008		FENDER'S FERRY BRIDGE
CHECKED BY R. Sennett	DATE 6/9/2008		BRIDGE NO.
APPROVED R. Sennett	DATE 6/9/2008		SCALE: As Shown — Plate 31

TIME PLOTTED => 12:42:53 PM
DATE PLOTTED => 6/9/2008
USERNAME => Fred

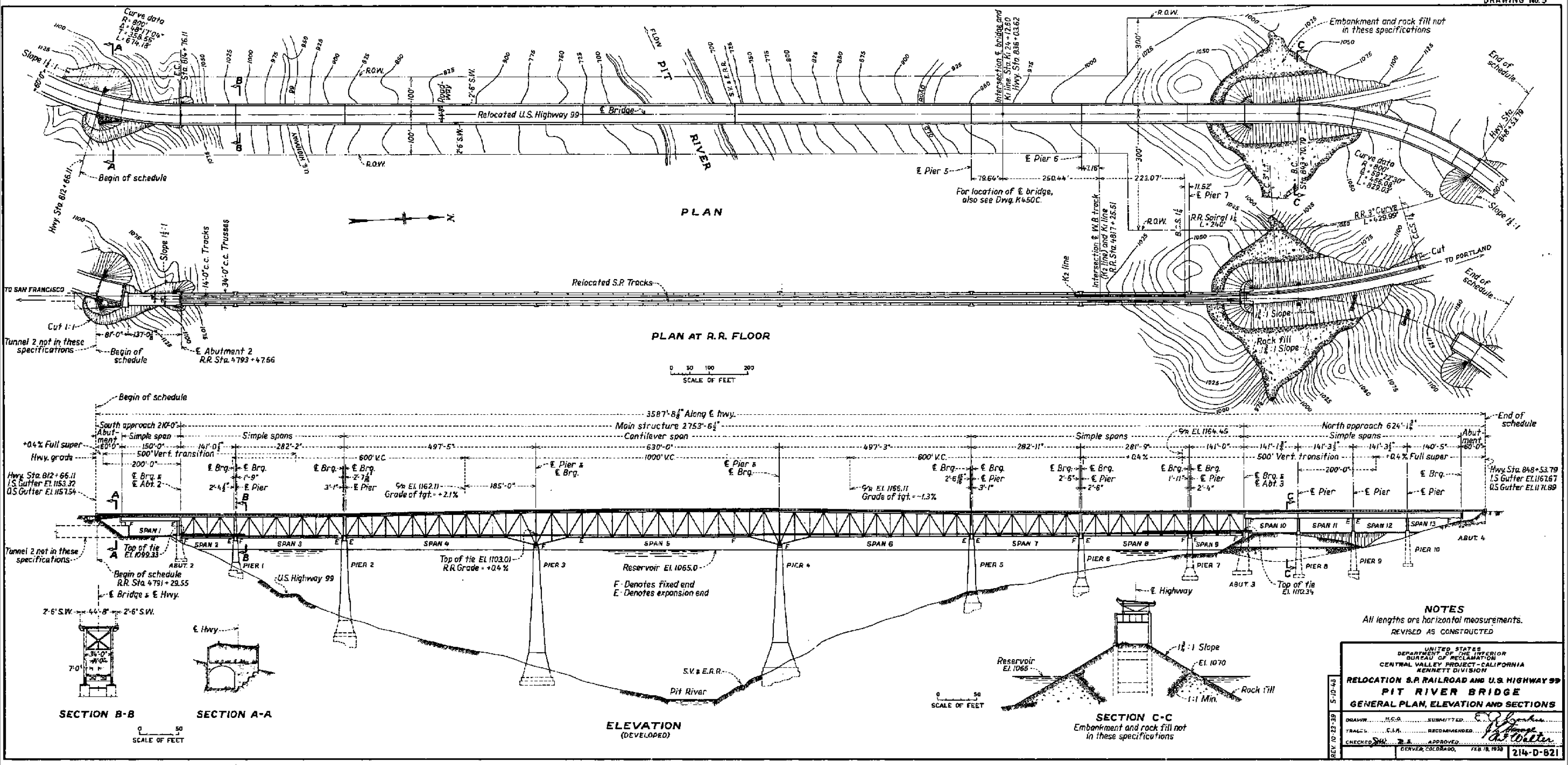

NOTES

All lengths are horizontal measurements.

REVISED AS CONSTRUCTED

UNITED STATES
DEPARTMENT OF THE INTERIOR
BUREAU OF RECLAMATION
CENTRAL VALLEY PROJECT - CALIFORNIA
KENNETT DIVISION

RELOCATION S.P. RAILROAD AND U.S. HIGHWAY 99

PIT RIVER BRIDGE

GENERAL PLAN, ELEVATION AND SECTIONS

DRAWN H.C.O.	SUBMITTED		
TRACED C.L.M.	RECOMMENDED		
CHECKED	APPROVED		
DENVER, COLORADO, FEB. 18, 1938			214-D-821

REV. 10-22-39

5-10-43

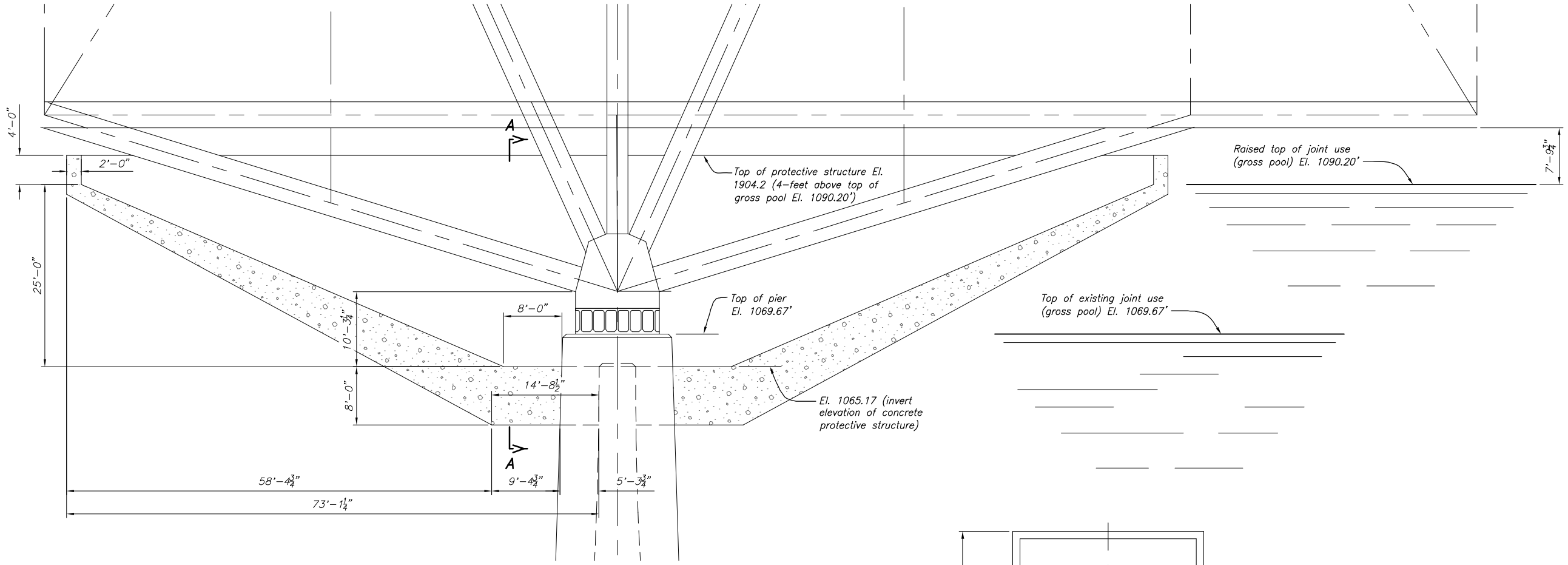

ELEVATION @ PIER (PIER 3 SHOWN, PIER 4 SIMILAR)

8 0 8 16
SCALE OF FEET

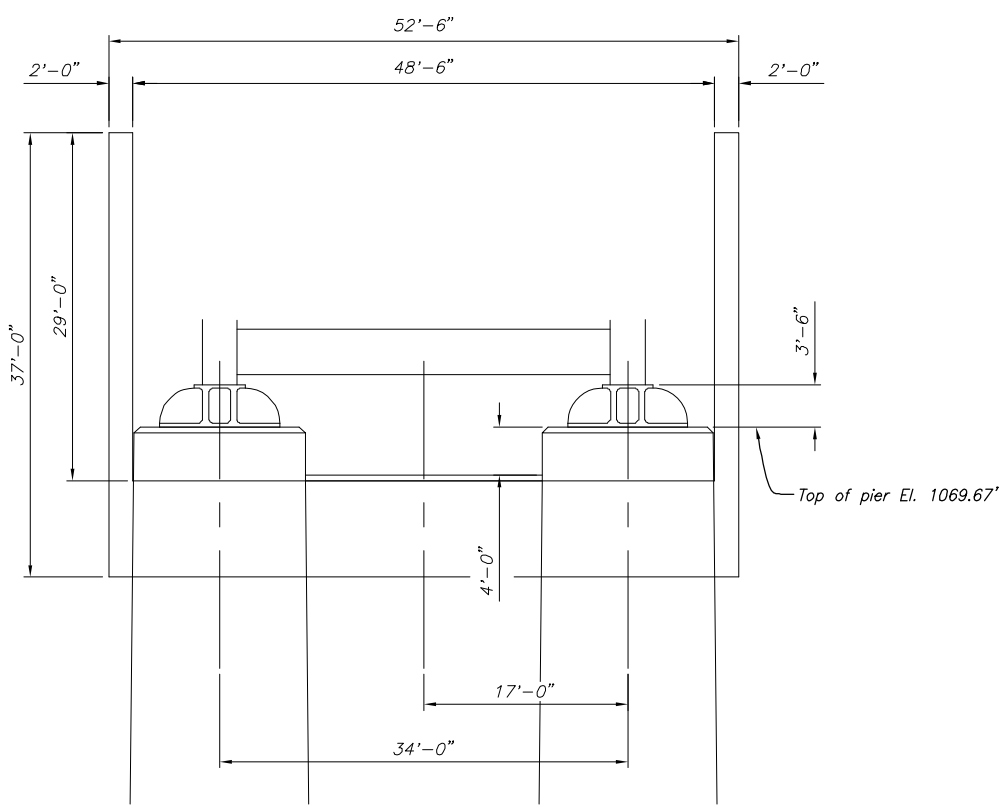

SECTION A–A

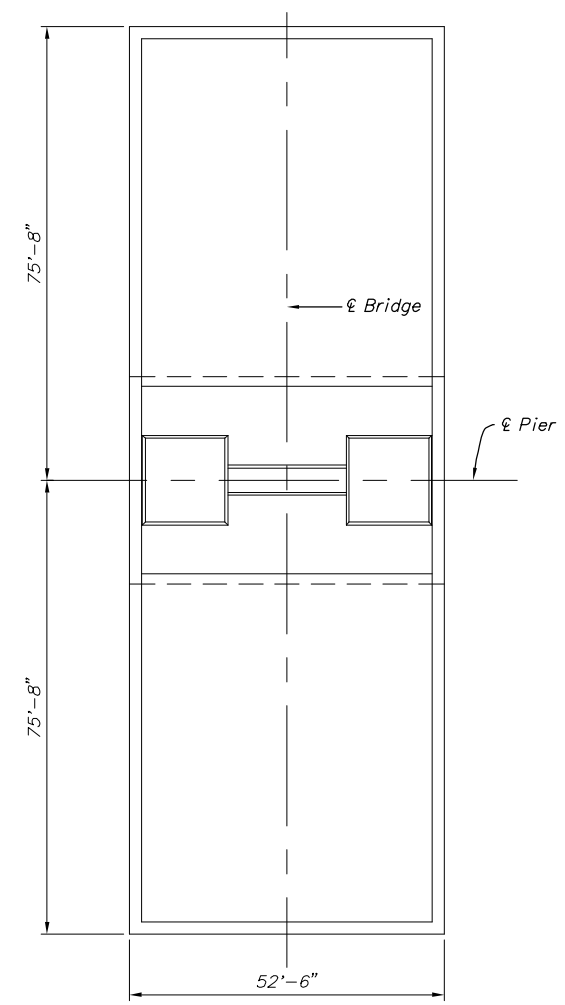

PLAN VIEW

16 0 16 32
SCALE OF FEET

NOTES

1. NAVD88 – North American Vertical Datum of 1988. Datum to be used in the feasibility design, therefore elevations shown on this drawing are NAVD88 elevations.
2. NGVD29 – National Geodetic Vertical Datum of 1929 "Local" datum referenced on many existing drawings.
3. Vertical Datum equation: NAVD88 elevation = NGVD29 elevation + 2.664 feet.
4. Two protective structures are required, one at top of Pier 3 and one at top of Pier 4.
5. Structural concrete design of cast-in-place concrete is based on normal weight, watertight concrete having a minimum specified compressive strength of 6,000 psi at 28 days.
6. 4-Inch diameter holes at 1'-0" spacing are to be cored through the existing top of pier concrete for installation of 3 bundled #11 bars to anchor to existing pier.
7. All reinforcement shall have a minimum yield strength of 60 ksi and shall be epoxy coated.
8. Existing concrete surfaces to be prepared with low pressure water cleaning before placing new concrete.
9. Hydrotite water stop to be placed at interface of existing concrete and new concrete.
10. Two submersible sump pumps are required inside each protective structure.

ALWAYS THINK SAFETY

U.S. DEPARTMENT OF THE INTERIOR
BUREAU OF RECLAMATION

CENTRAL VALLEY PROJECT – CALIFORNIA
KENNETT DIVISION

SHASTA DAM FEASIBILITY
18.5 FT. DAM RAISE
PIT RIVER BRIDGE
BEARING PROTECTION STRUCTURE

PREPARED BY Jesus G. Romero, PE
REVIEWED BY Roman Kolturiuk, PE
86-68740 WATER CONVEYANCE GROUP

DENVER, COLORADO
SHEET 1 OF 1

PLATE 33

DATE AND TIME PLOTTED
PLOTTED BY CJOYCE
CAD SYSTEM AutoCAD Rel. 18.0s
CAD FILENAME PLATES 19 21 & 24.DWG

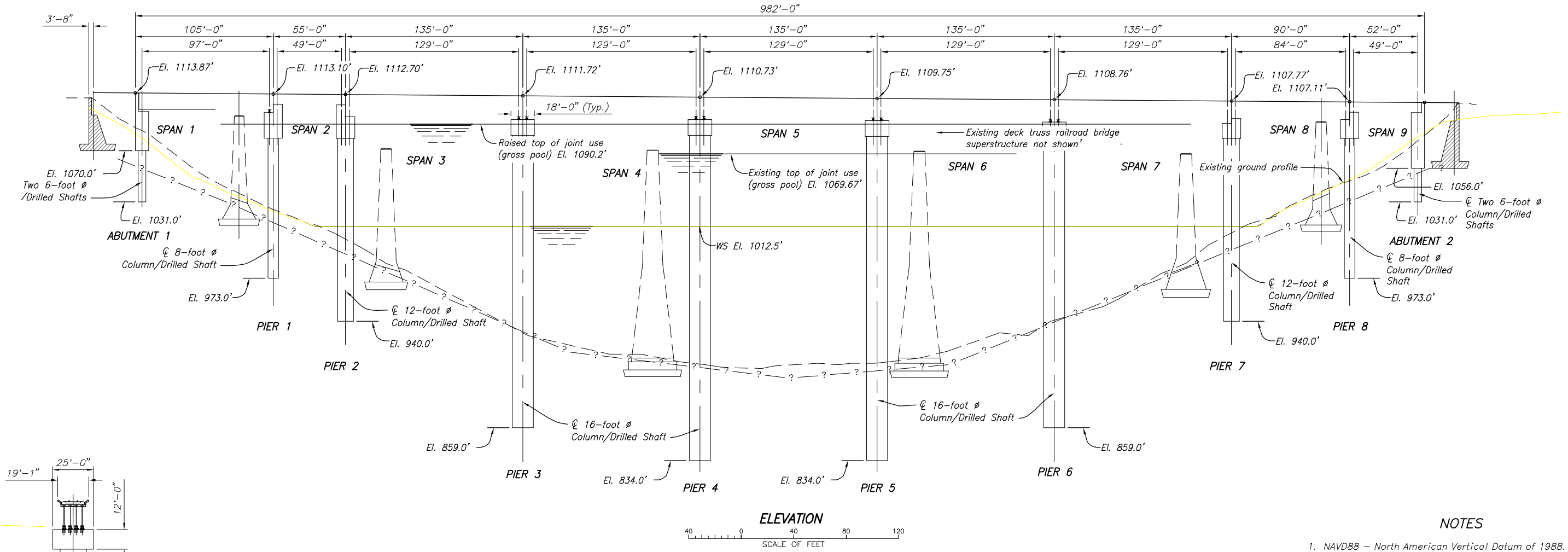

ELEVATION

40 0 40 80 120
SCALE OF FEET

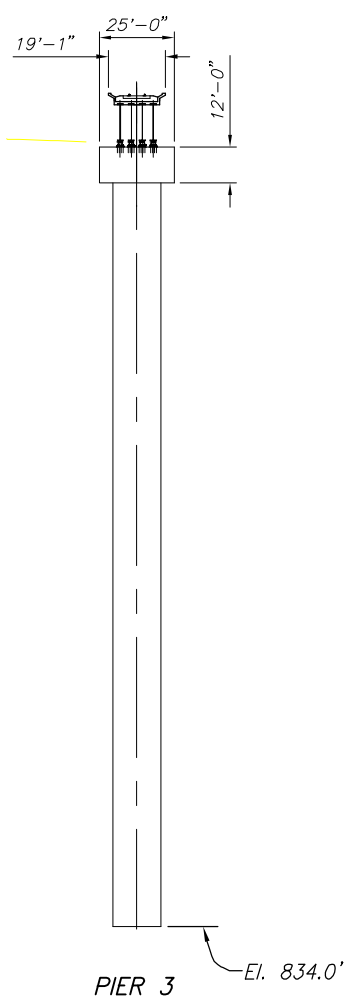

NOTES

1. NAVD88 – North American Vertical Datum of 1988. Datum to be used in the feasibility design, therefore elevations shown on this drawing are NAVD88 elevations.
2. NGVD29 – National Geodetic Vertical Datum of 1929 "Local" datum referenced on many existing drawings.
3. Vertical Datum equation: NAVD88 elevation = NGVD29 elevation + 2.664 feet.
4. For railroad bridge superstructure cross section, see PLATE 20.
5. Structural concrete design of cast–in–place concrete is based on concrete having a minimum specified compressive strength of 4,000 psi at 28 days.
6. Structural steel in bridge superstructure consists of high strength, ASTM A709 Grade 50 structural steel plates and shapes.
7. All reinforcement shall have a minimum yield strength of 60 ksi and shall be epoxy coated.

ALWAYS THINK SAFETY

U.S. DEPARTMENT OF THE INTERIOR
BUREAU OF RECLAMATION

CENTRAL VALLEY PROJECT – CALIFORNIA
KENNETT DIVISION

SHASTA DAM FEASIBILITY

18.5 FT. DAM RAISE

SACRAMENTO RIVER 2ND CROSSING UPRR BRIDGE
ELEVATION AND SECTION

PREPARED BY Jesus G. Romero, PE

REVIEWED BY Roman Koltuniuk, PE
86-68140 WATER CONVEYANCE GROUP

DENVER, COLORADO
SHEET 1 OF 1

PLATE 34

DATE AND TIME PLOTTED
FEBRUARY 8, 2011 14:02
PLOTTED BY
CJOYCE

CAD SYSTEM
AutoCAD Rel. 18.0s
CAD FILENAME
PLATES 19 21 & 24.DWG

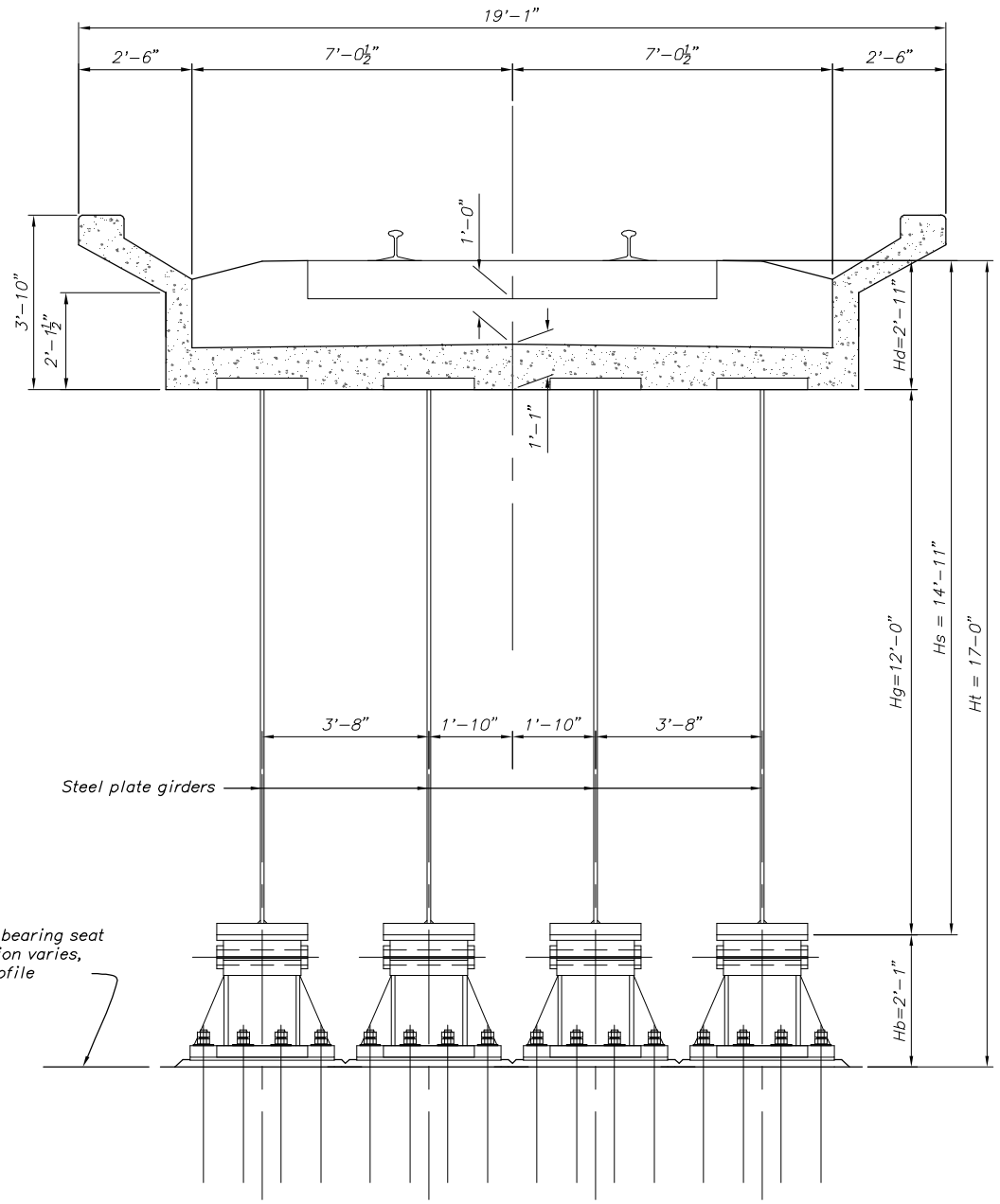

BRIDGE SUPERSTRUCTURE CROSS SECTION (TYPICAL) FOR SPANS 3, 4, 5, 6 AND 7.

Ht = Total superstructure depth from top of tie to top of bearing seat elevation.
Hs = Total superstructure depth from top of tie to bottom of girder flange.
Hd = Height summing up depth of concrete deck, ballast and tie
Hb = Height of bearing.
Hg = Girder height measured to bottom of concrete slab.
Hs = Hg +Hd
Ht = Hb +Hg + Hd

SPAN	Hb	Hg	Hs	Ht
1	1'-7"	8'-8"	12'-7"	13'-2"
2 & 9	10"	4'-0"	6'-11"	7'-9"
8	1'-6"	7'-11"	10'-10"	12'-4"
3, 4, 5, 6 & 7	2'-1"	12'-0"	14'-11"	17'-0"

1 0 1 2 3 4 5
SCALE OF FEET

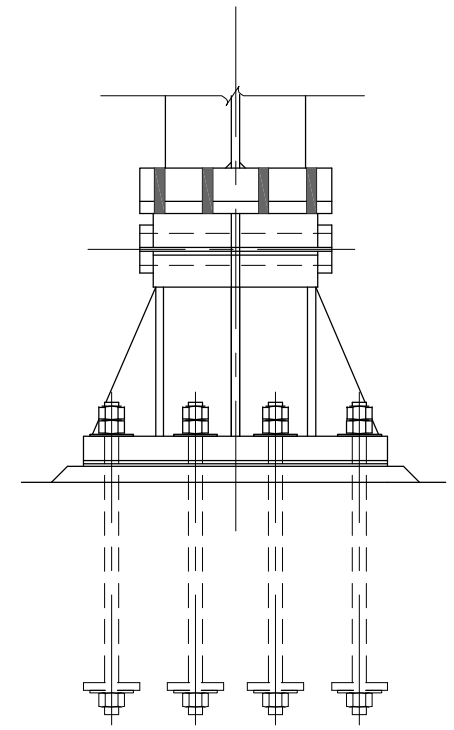

DETAIL 1

1 0 1 2 3
SCALE OF FEET

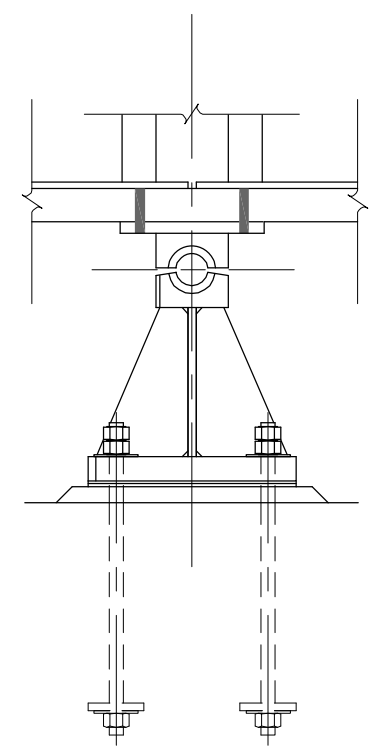

DETAIL 2

1 0 1 2 3
SCALE OF FEET

NOTES

1. NAVD88 – North American Vertical Datum of 1988. Datum to be used in the feasibility design, therefore elevations shown on this drawing are NAVD88 elevations.
2. NGVD29 – National Geodetic Vertical Datum of 1929 "Local" datum referenced on many existing drawings.
3. Vertical Datum equation: NAVD88 elevation = NGVD29 elevation + 2.664 feet.
4. Structural concrete design of cast–in–place concrete is based on concrete having a minimum specified compressive strength of 4,000 psi at 28 days.
5. Structural steel in bridge superstructure consists of high strength, ASTM A709 Grade 50 structural steel plates and shapes.
6. All reinforcement shall have a minimum yield strength of 60 ksi and shall be epoxy coated.

ALWAYS THINK SAFETY

U.S. DEPARTMENT OF THE INTERIOR
BUREAU OF RECLAMATION
CENTRAL VALLEY PROJECT – CALIFORNIA
KENNETT DIVISION

SHASTA DAM FEASIBILITY
18.5 FT. DAM RAISE
SACRAMENTO RIVER 2ND CROSSING UPRR BRIDGE
SUPERSTRUCTURE SECTION AND DETAILS

PREPARED BY Jesus G. Romero, PE
REVIEWED BY Roman Kolturiuk, PE
86-68140 WATER CONVEYANCE GROUP

DENVER, COLORADO
SHEET 1 OF 1

PLATE 35

DATE AND TIME PLOTTED
PLOTTED BY
CAD SYSTEM AutoCAD Rel. 18.0s
CAD FILENAME JESUS BRIDGE.DWG

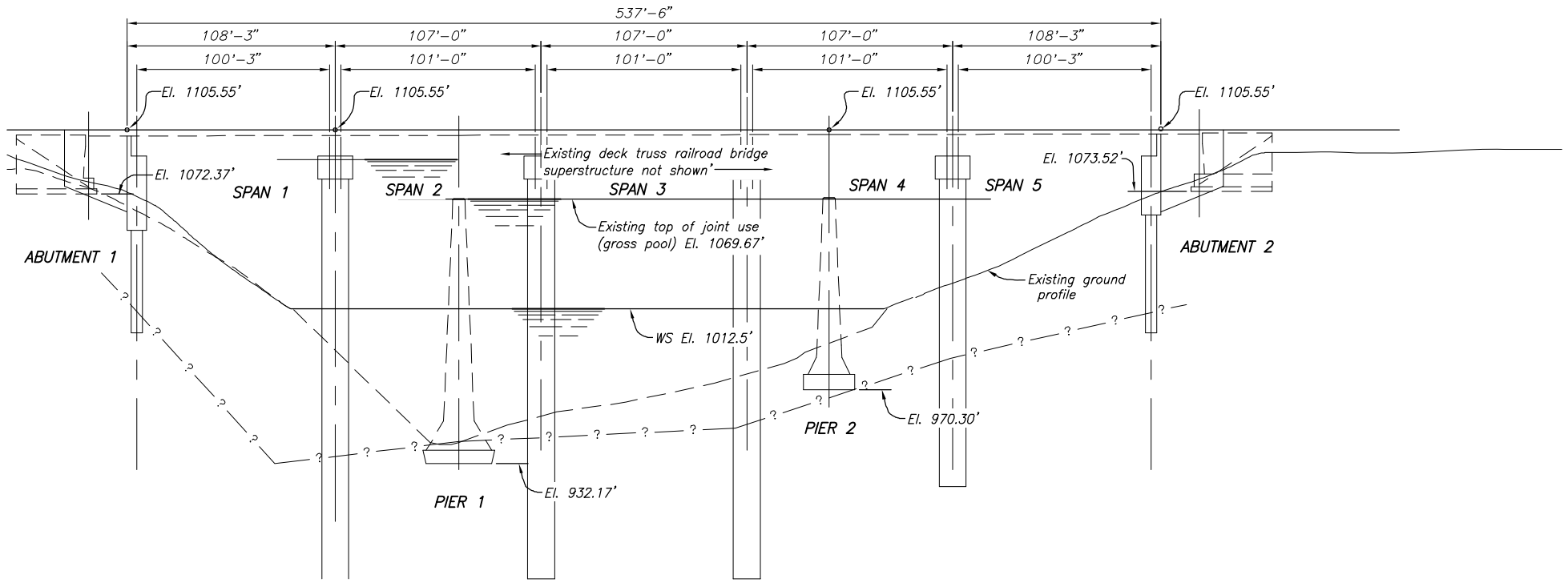

EXISTING BRIDGE ELEVATION

40 0 40 80 120
SCALE OF FEET

NOTES

1. NAVD88 – North American Vertical Datum of 1988. Datum to be used in the feasibility design, therefore elevations shown on this drawing are NAVD88 elevations.
2. NGVD29 – National Geodetic Vertical Datum of 1929 "Local" datum referenced on many existing drawings.
3. Vertical Datum equation: NAVD88 elevation = NGVD29 elevation + 2.664 feet.
4. For railroad bridge superstructure cross section, see PLATE 22.
5. Structural concrete design of cast–in–place concrete is based on concrete having a minimum specified compressive strength of 6,000 psi at 28 days.
6. Structural steel in bridge superstructure consists of high strength, ASTM A709 Grade 50 structural steel plates and shapes.
7. All reinforcement shall have a minimum yield strength of 60 ksi and shall be epoxy coated.

ALWAYS THINK SAFETY

U.S. DEPARTMENT OF THE INTERIOR
BUREAU OF RECLAMATION

CENTRAL VALLEY PROJECT – CALIFORNIA
KENNETT DIVISION

SHASTA DAM FEASIBILITY
18.5 FT. DAM RAISE
DONEY CREEK UPRR BRIDGE
ELEVATIONS AND DETAIL

PREPARED BY Jesus G. Romero PE
REVIEWED BY Roman Kolturiuk, PE
BB-8814a WATER CONVEYANCE GROUP

DENVER, COLORADO
SHEET 1 OF 1

PLATE 36

DATE AND TIME PLOTTED
FEBRUARY 8, 2011 14:02
PLOTTED BY
CJOYCE

CAD SYSTEM
AutoCAD Rel. 18.0s
CAD FILENAME
PLATES 19 21 & 24.DWG

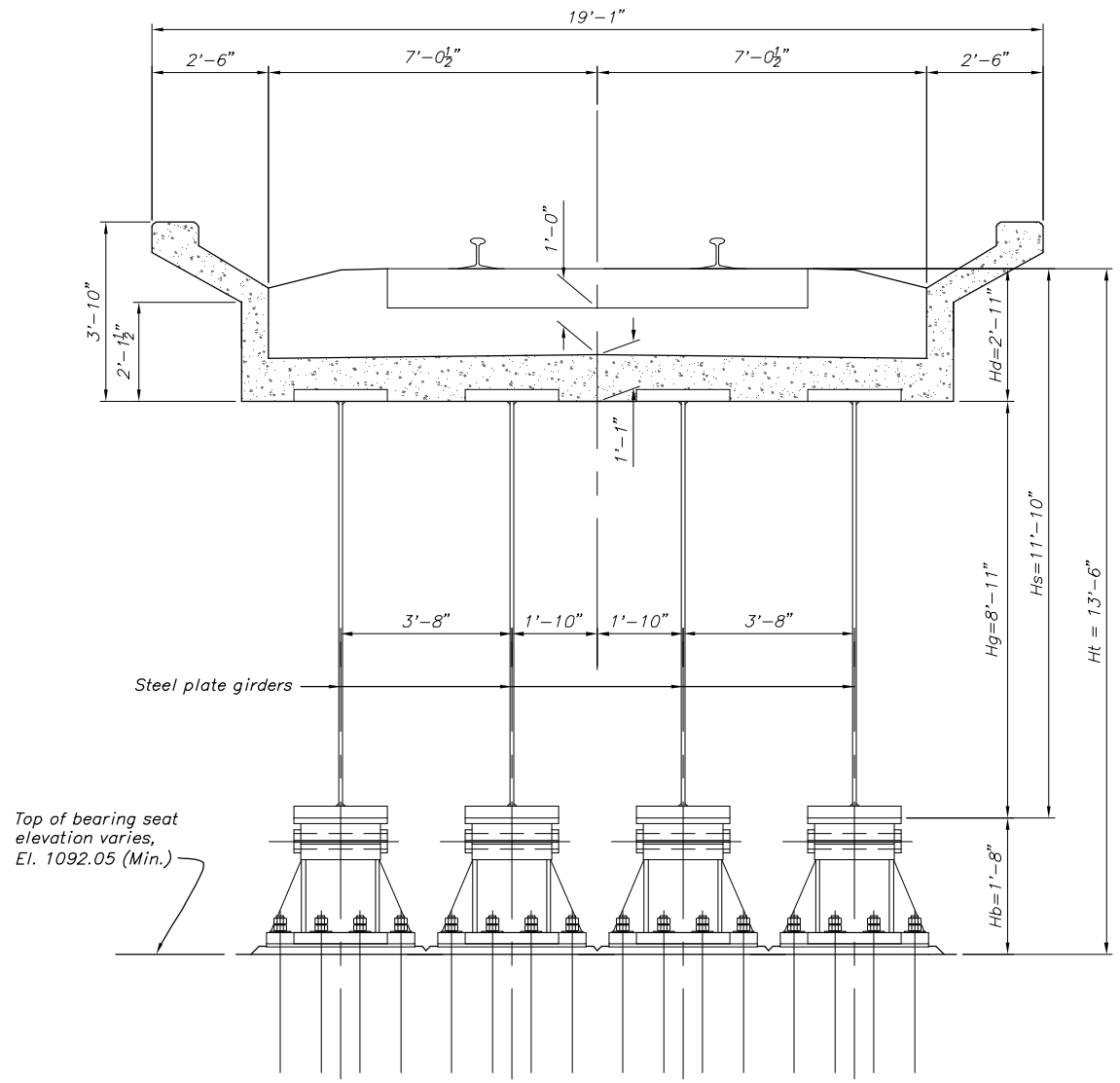

BRIDGE SUPERSTRUCTURE CROSS SECTION (TYPICAL) FOR SPANS 1 THROUGH 5

Ht = Total superstructure depth from top of tie to top of bearing seat elevation.
Hs = Total superstructure depth from top of tie to bottom of girder flange.

1 0 1 2 3 4 5
SCALE OF FEET

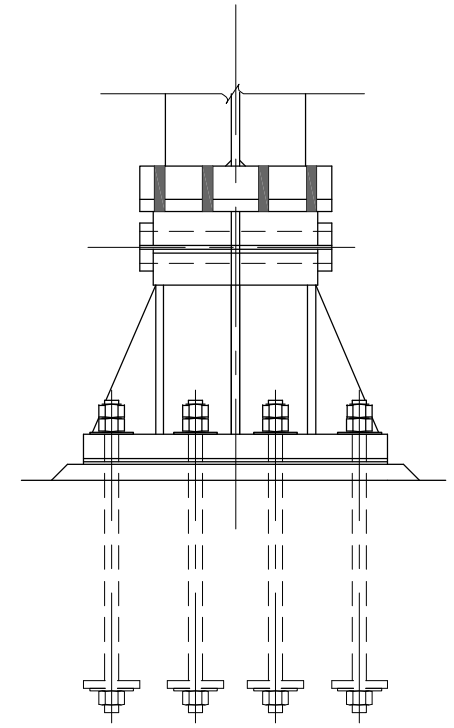

DETAIL 1

1 0 1 2 3
SCALE OF FEET

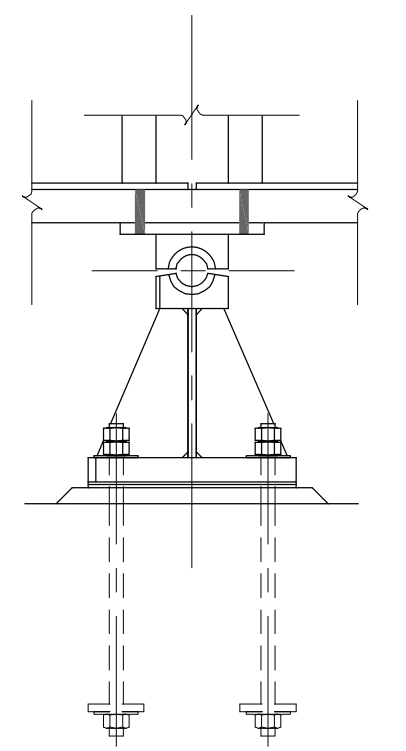

DETAIL 2

1 0 1 2 3
SCALE OF FEET

NOTES

1. NAVD88 – North American Vertical Datum of 1988. Datum to be used in the feasibility design, therefore elevations shown on this drawing are NAVD88 elevations.
2. NGVD29 – National Geodetic Vertical Datum of 1929 "Local" datum referenced on many existing drawings.
3. Vertical Datum equation: NAVD88 elevation = NGVD29 elevation + 2.664 feet.
4. Structural concrete design of cast–in–place concrete is based on concrete having a minimum specified compressive strength of 4,000 psi at 28 days.
5. Structural steel in bridge superstructure consists of high strength, ASTM A709 Grade 50 structural steel plates and shapes.
6. All reinforcement shall have a minimum yield strength of 60 ksi and shall be epoxy coated.

ALWAYS THINK SAFETY

U.S. DEPARTMENT OF THE INTERIOR
BUREAU OF RECLAMATION
CENTRAL VALLEY PROJECT – CALIFORNIA
KENNETT DIVISION

SHASTA DAM FEASIBILITY
18.5 FT. DAM RAISE
DONEY CREEK UPRR BRIDGE
SUPERSTRUCTURE SECTION AND DETAILS

PREPARED BY Jesus G. Romero, PE
REVIEWED BY Roman Kolturiuk, PE
86-68140 WATER CONVEYANCE GROUP

DENVER, COLORADO
SHEET 1 OF 1

PLATE 37

DATE AND TIME PLOTTED
PLOTTED BY
CAD SYSTEM AutoCAD Rel. 18.0s
CAD FILENAME JESUS_BRIDGE1.DWG

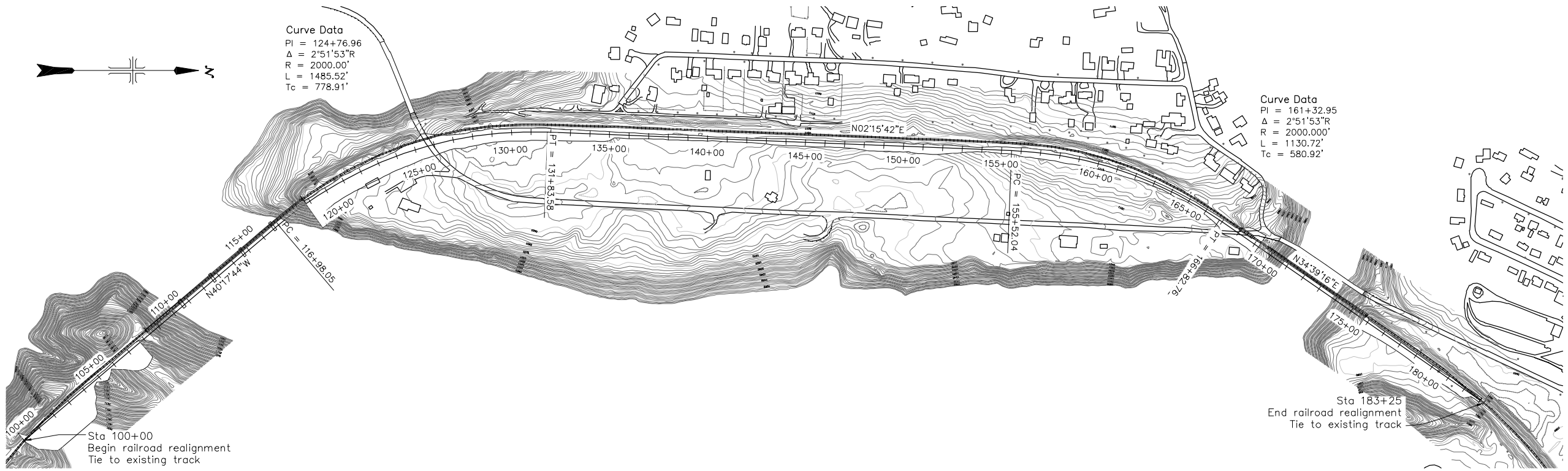

PLAN

SCALE OF FEET
1"=300'

NOTES

1. Abbreviations:
   A.D. – Algebraic grade difference
   BVCE – Begin vertical curve elevation
   BVCS – Begin vertical curve station
   EVCE – End vertical curve elevation
   EVCS – End vertical curve station
   K – Rate of vertical curve curvature
   PVI – Point of vertical intersection
   VC – Vertical curve
2. Profile Grade is to top of railroad tie.
3. Design has not been verified with UPRR.
4. Bridge construction will tie into railroad realignment to be designed by others.
5. NAVD88 – North American Vertical Datum. Datum to be used in feasibility design.
6. NGVD29 – National Geodetic Vertical Datum at 1929 local datum referencd on many existing drawings.
7. Vertical Datum equation: NAVD88 elevation = NAVD29 elevation + 2.664 feet.

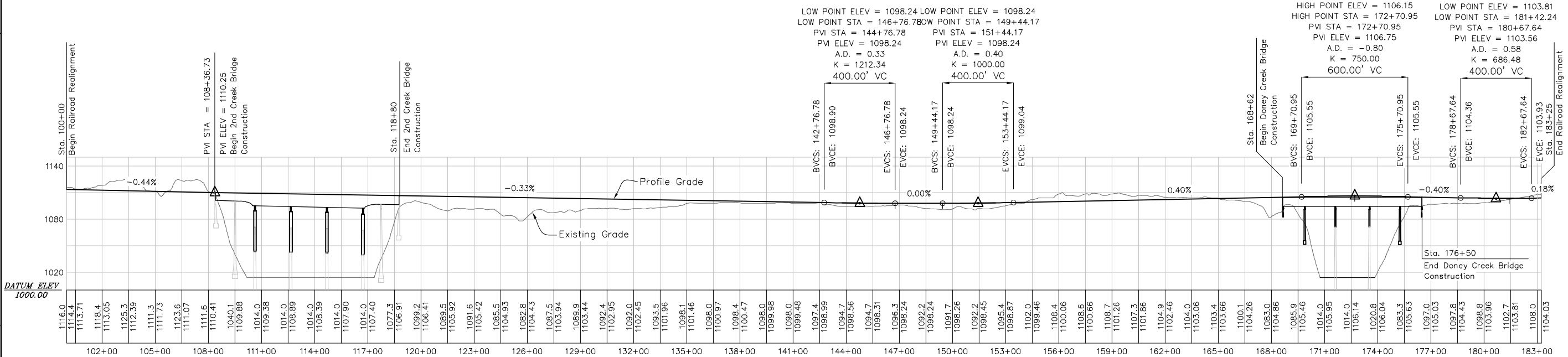

PROFILE

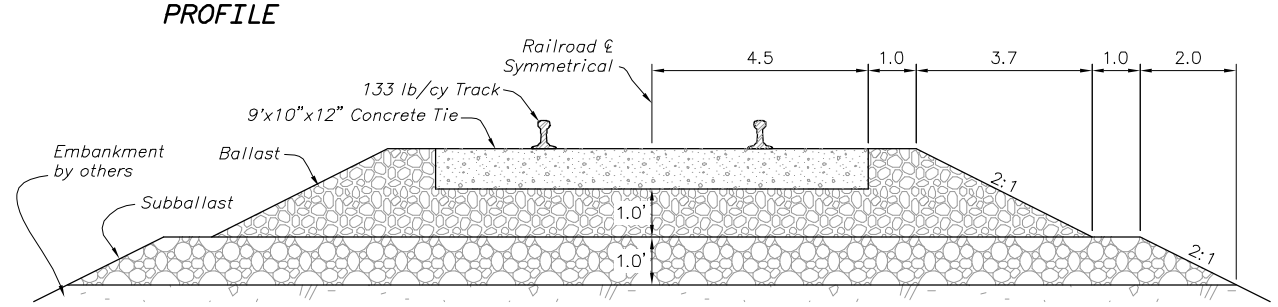

TYPICAL RAILROAD SECTION

ALWAYS THINK SAFETY

U.S. DEPARTMENT OF THE INTERIOR
BUREAU OF RECLAMATION
CENTRAL VALLEY PROJECT – CALIFORNIA
KENNETT DIVISION

SHASTA DAM FEASIBILITY
18.5 FT. DAM RAISE
UNION PACIFIC RAILROAD REALIGNMENT
SACRAMENTO RIVER 2ND CROSSING TO DONEY CREEK

PREPARED BY Nick Clough P.E.
REVIEWED BY Jesus G. Romero P.E.
86-68140 WATER CONVEYANCE GROUP

DENVER, COLORADO
SHEET 1 OF 1

PLATE 38

DATE AND TIME PLOTTED MARCH 13, 2017 11:16
PLOTTED BY CJOYCE

CAD SYSTEM AutoCAD 18.0s
CAD FILENAME PLATE_38.DWG

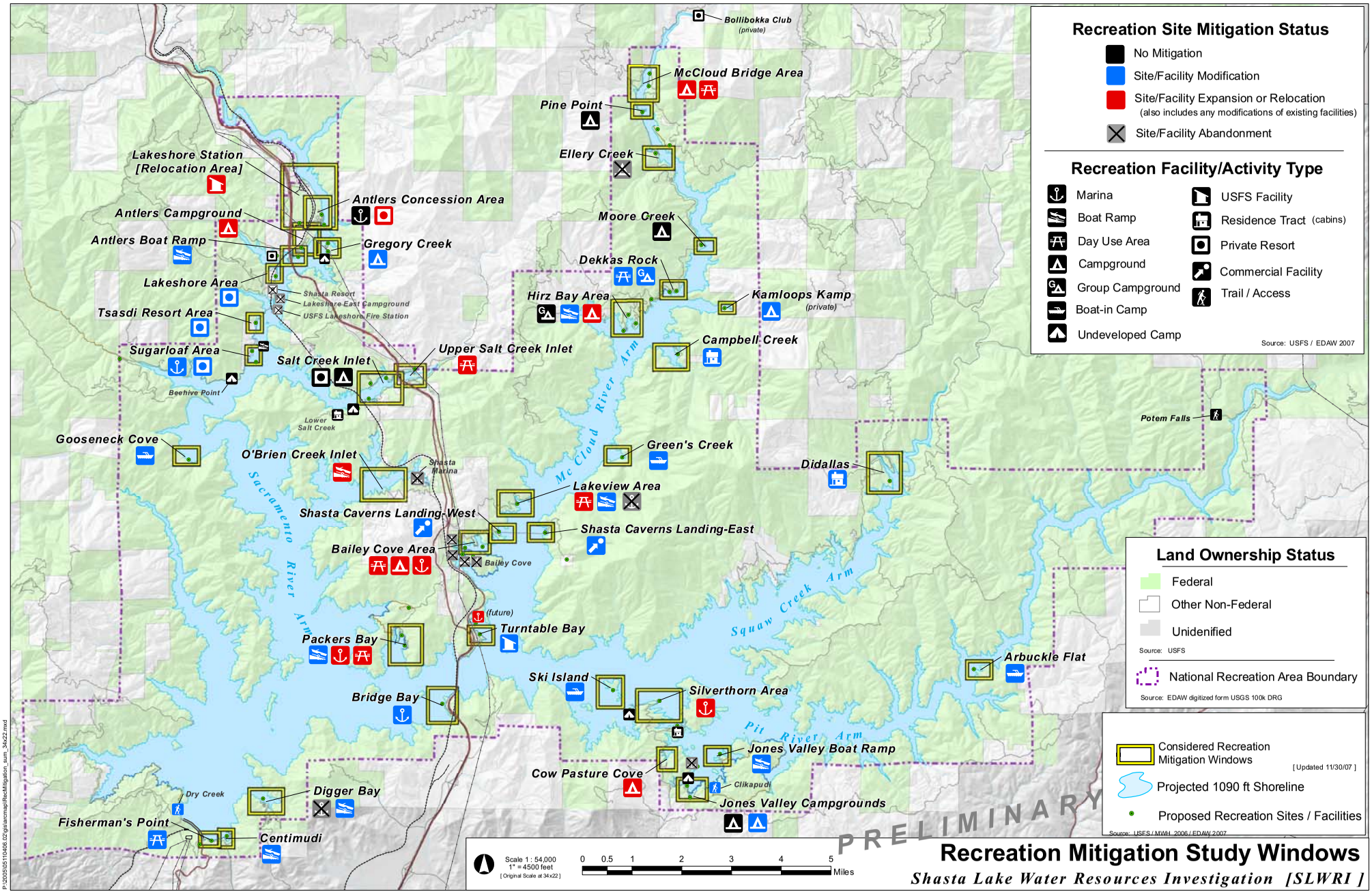
Recreation Site Mitigation Status
No Mitigation
Site/Facility Modification
Site/Facility Expansion or Relocation
(also includes any modifications of existing facilities)
Site/Facility Abandonment
Recreation Facility/Activity Type
Marina
Boat Ramp
Day Use Area
Campground
Group Campground
Boat-in Camp
Undeveloped Camp
USFS Facility
Residence Tract (cabins)
Private Resort
Commercial Facility
Trail / Access
Source: USFS / EDAW 2007
Land Ownership Status
Federal
Other Non-Federal
Unidenified
Source: USFS
National Recreation Area Boundary
Source: EDAW digitized form USGS 100k DRG
Considered Recreation Mitigation Windows
[Updated 11/30/07]
Projected 1090 ft Shoreline
Proposed Recreation Sites / Facilities
Source: USFS / MWH, 2006 / EDAW 2007
Bollibokka Club (private)
McCloud Bridge Area
Pine Point
Ellery Creek
Lakeshore Station [Relocation Area]
Antlers Concession Area
Antlers Campground
Antlers Boat Ramp
Gregory Creek
Moore Creek
Dekkas Rock
Lakeshore Area
Shasta Resort
Lakeshore East Campground
USFS Lakeshore Fire Station
Hirz Bay Area
Kamloops Kamp (private)
Tsasdi Resort Area
Campbell Creek
Sugarloaf Area
Upper Salt Creek Inlet
Salt Creek Inlet
Beehive Point
Lower Salt Creek
Potem Falls
Gooseneck Cove
O'Brien Creek Inlet
Shasta Marina
Green's Creek
Didallas
Mc Cloud River Arm
Lakeview Area
Sacramento River Arm
Shasta Caverns Landing-West
Shasta Caverns Landing-East
Bailey Cove Area
Bailey Cove
Squaw Creek Arm
(future)
Turntable Bay
Packers Bay
Arbuckle Flat
Ski Island
Silverthorn Area
Bridge Bay
Pit River Arm
Jones Valley Boat Ramp
Cow Pasture Cove
Clikapudi
Jones Valley Campgrounds
Dry Creek
Digger Bay
Fisherman's Point
Centimudi
PRELIMINARY
Scale 1 : 54,000
1" = 4500 feet
[Original Scale at 34x22]
0 0.5 1 2 3 4 5 Miles
Recreation Mitigation Study Windows
Shasta Lake Water Resources Investigation [SLWRI]
P:\2005\05110406.02\gis\arcmap\RecMitigation_sum_34x22.mxd
1/8/08

Plate 39