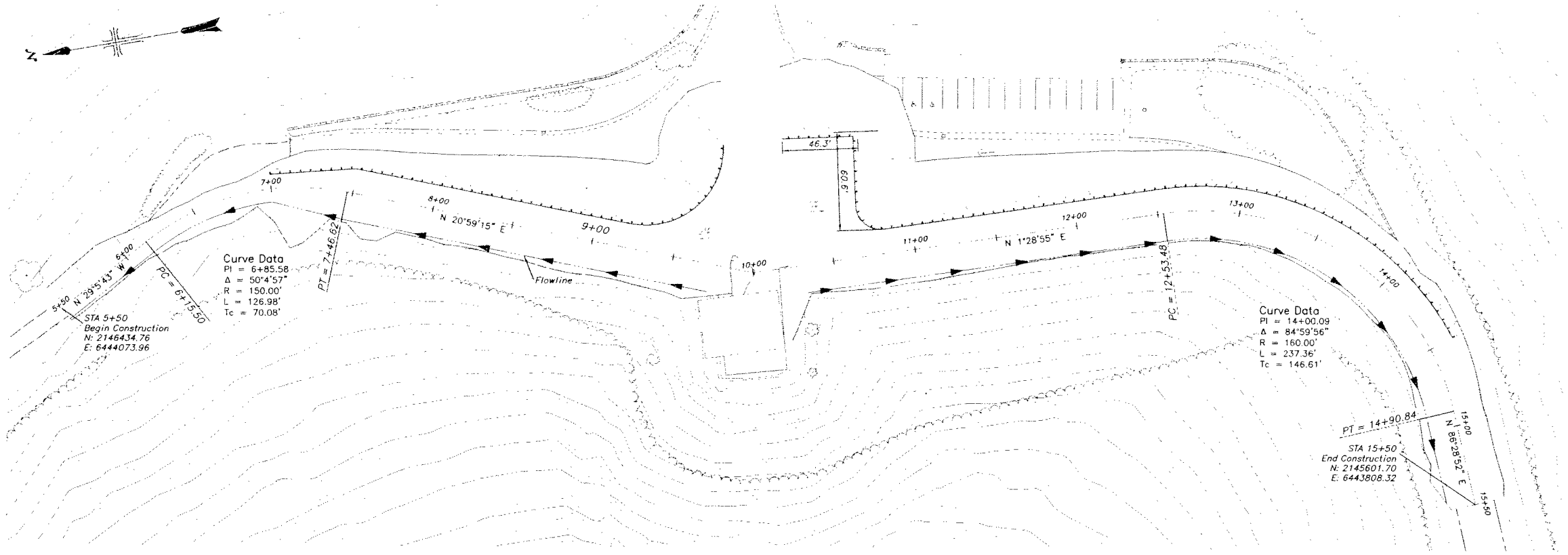

PLAN

SCALE OF FEET

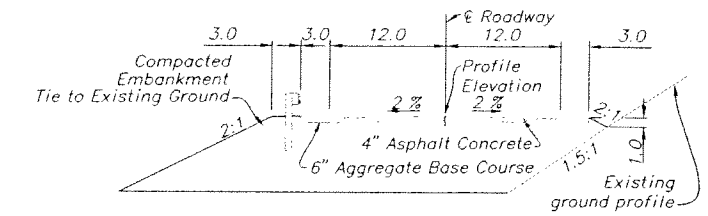

Typical Roadway Cross Section

NO SCALE
Sta 7+50 to 9+60
Sta 10+70 to 15+40

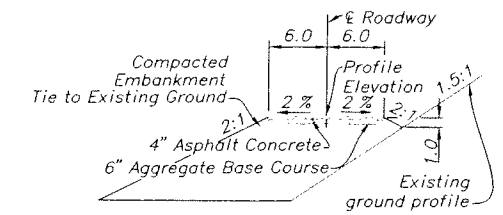

Typical Roadway Cross Section

NO SCALE
Sta 5+50 to 7+00

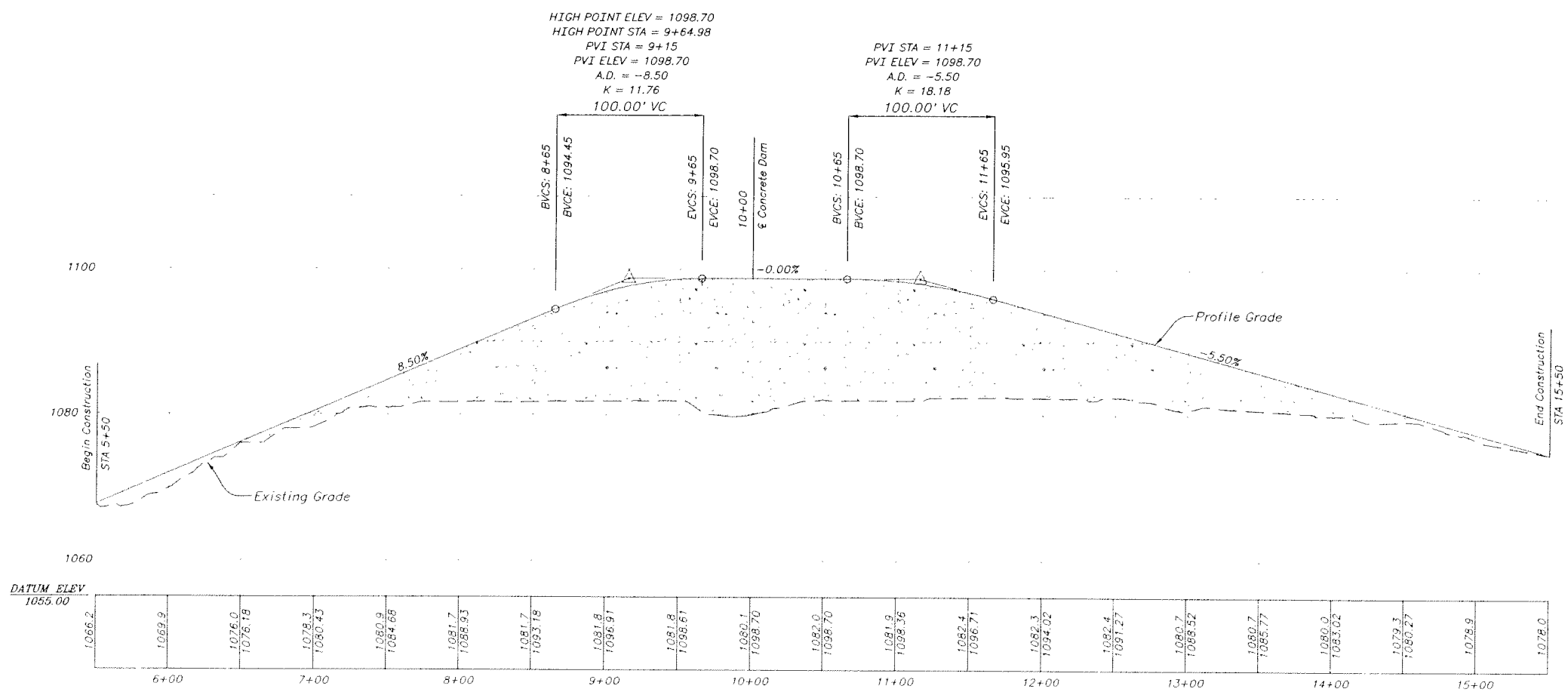

NOTES

1. NAVD88 – North American Vertical Datum. Datum to be used in feasibility design.
2. NGVD29 – National Geodetic Vertical Datum at 1929 – "local" datum referenced on many existing drawings.
3. Vertical Datum equation: NAVD88 elevation = NAVD29 elevation + 2.664 feet.

ALWAYS THINK SAFETY

U.S. DEPARTMENT OF THE INTERIOR
BUREAU OF RECLAMATION

CENTRAL VALLEY PROJECT – CALIFORNIA
KENNETT DIVISION

SHASTA DAM FEASIBILITY
18.5 FT. DAM RAISE
RIGHT WING DAM ACCESS ROADS

PREPARED BY Nick Clough P.E.
REVIEWED BY Jesus G. Romero P.E.
86-68140 WATER CONVEYANCE GROUP

DENVER, COLORADO
SHEET 1 OF 1

PLATE 7

DATE AND TIME PLOTTED FEBRUARY 8, 2011 12:20
PLOTTED BY CJOYCE

CAD SYSTEM AutoCAD Rel 18.0s
CAD FILENAME 214-D-RIGHT WING (PLATE 10).DWG

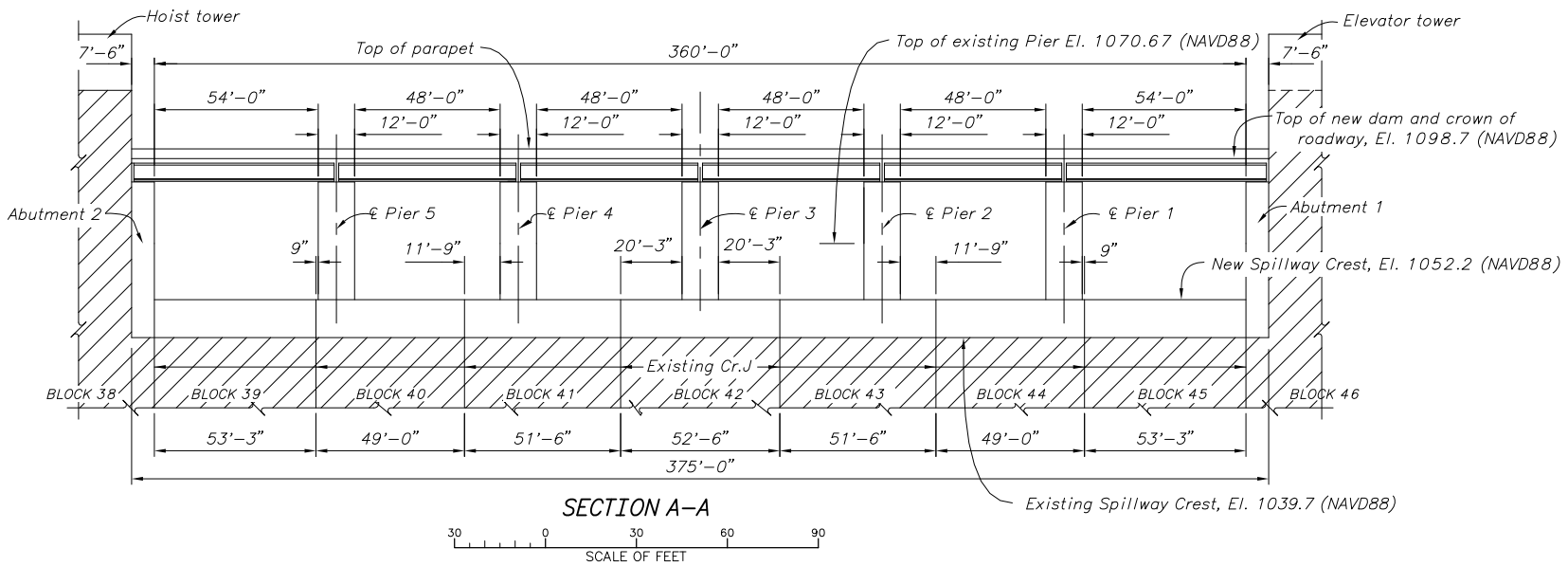

SECTION A–A

30 0 30 60 90
SCALE OF FEET

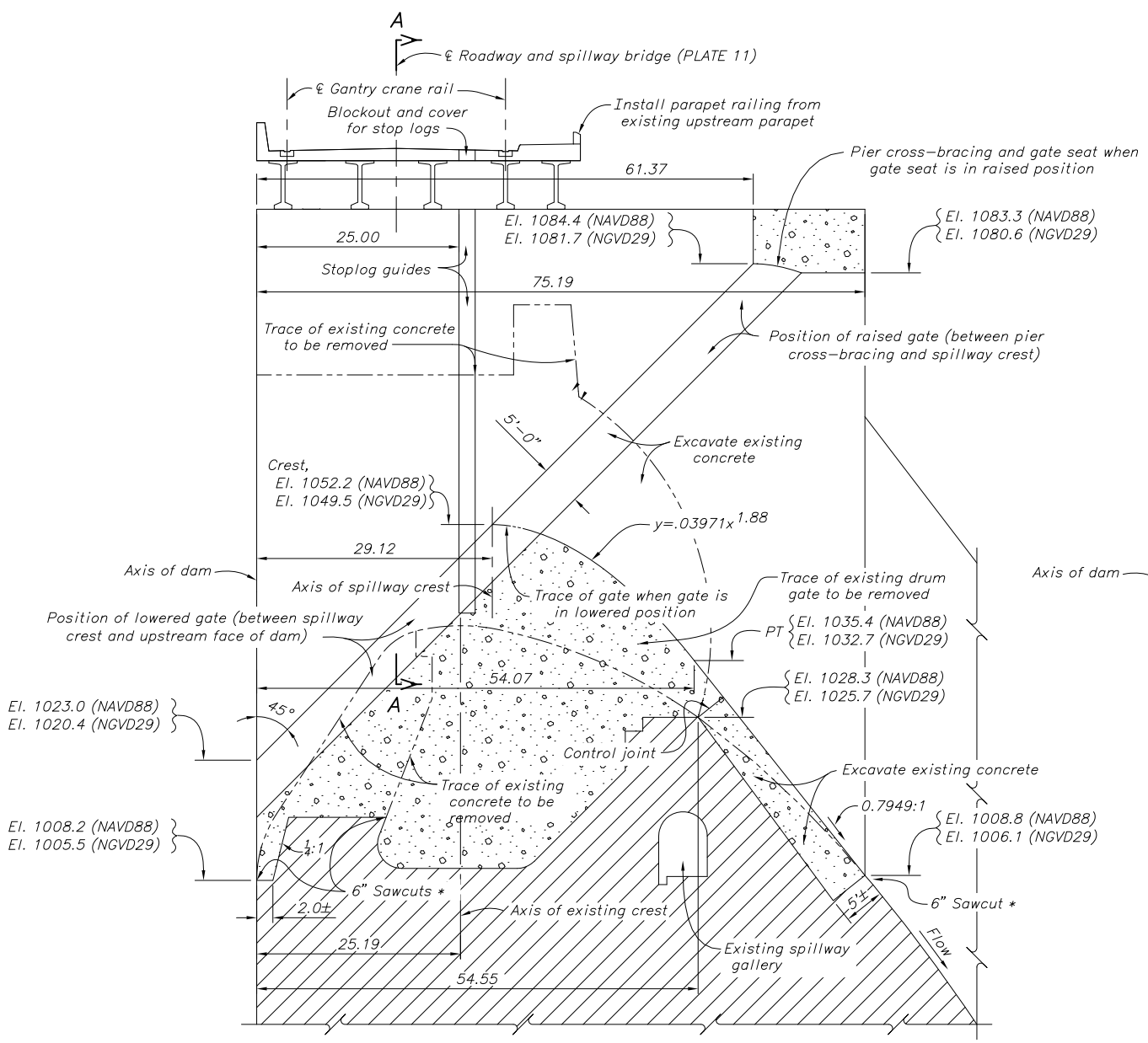

REINFORCEMENT AND PIER ANCHORS NOT SHOWN

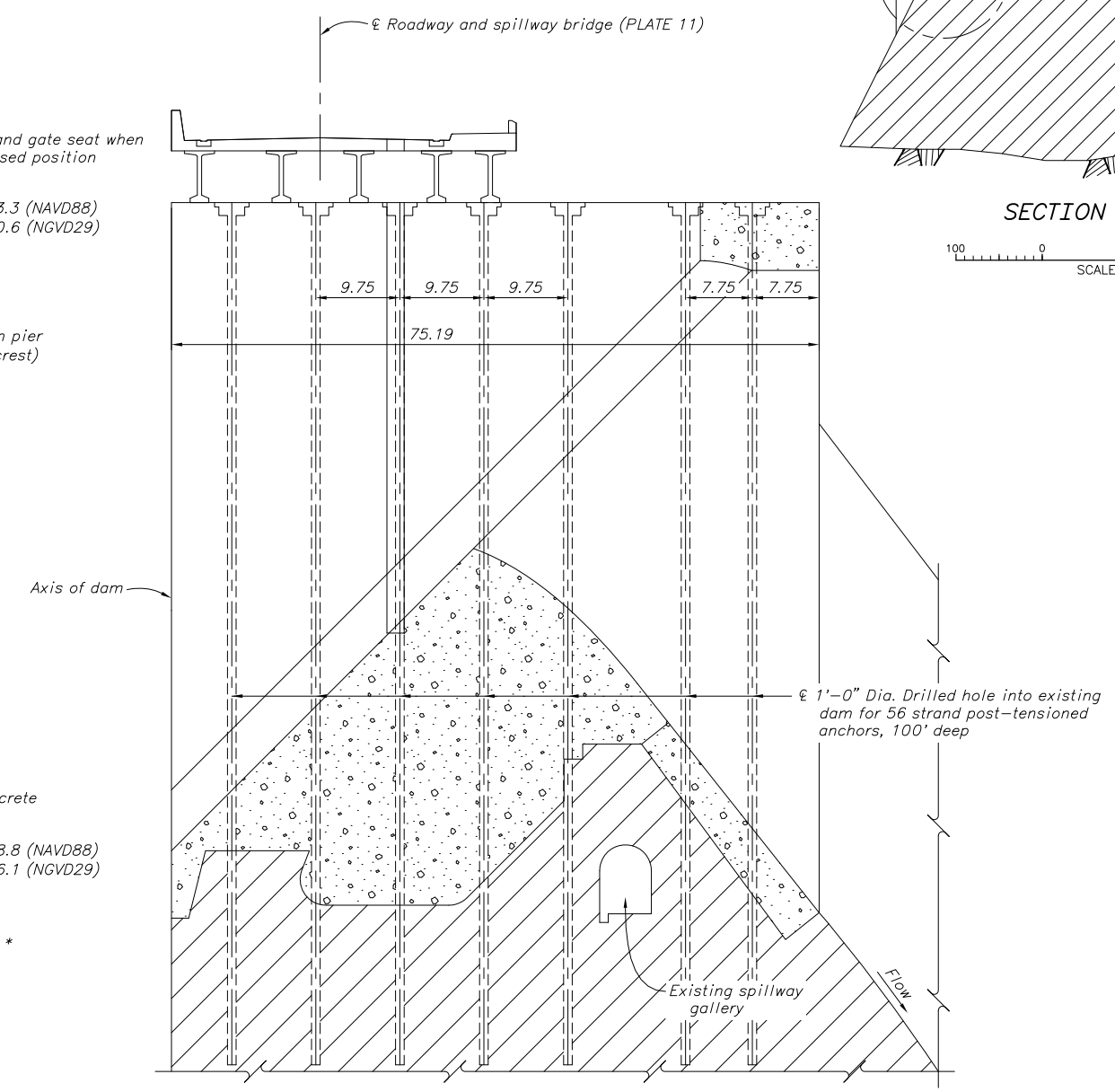

PIER ANCHORS ONLY

DETAIL 1

10 0 10 20 30
SCALE OF FEET

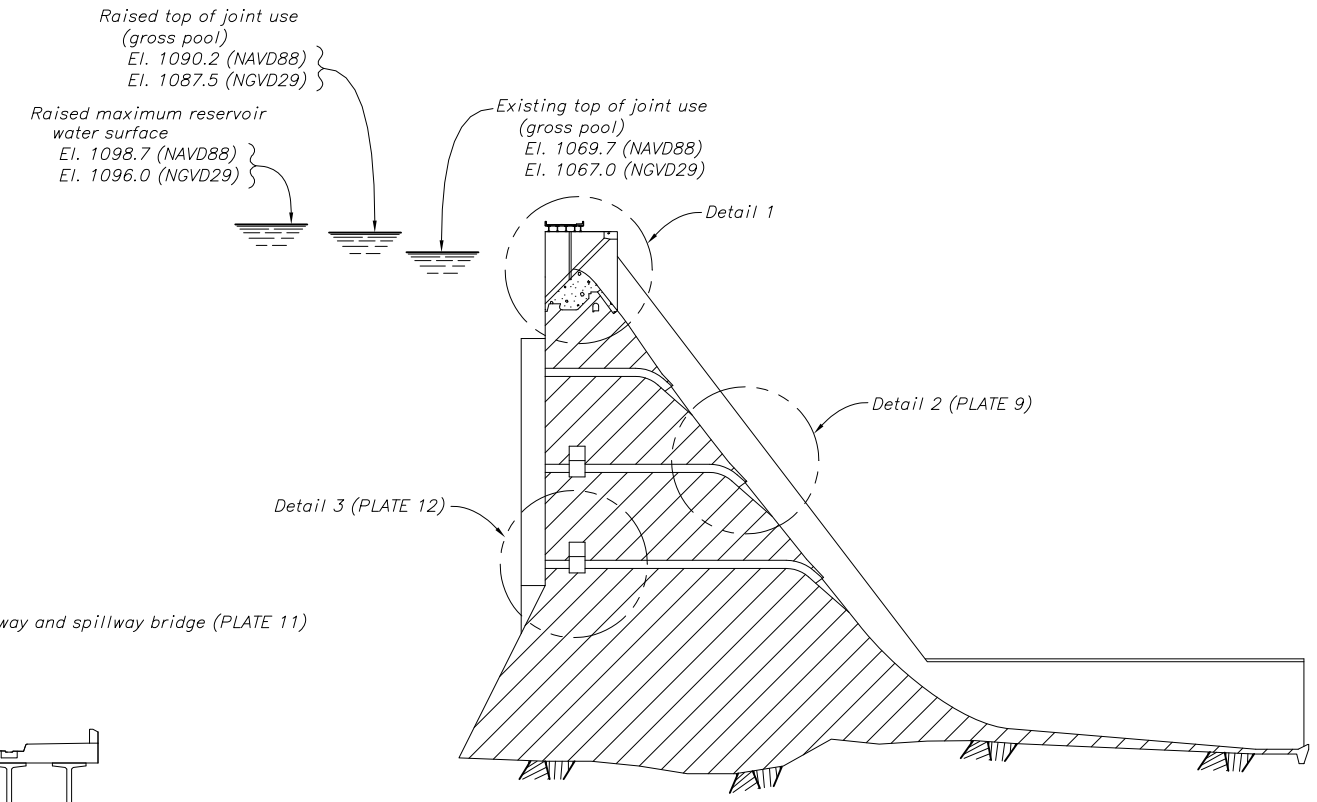

SECTION THRU SPILLWAY

100 0 100 200 300
SCALE OF FEET

NOTES

1. NAVD88 – North American Vertical Datum of 1988 used in the feasibility design.
2. NGVD29 – National Geodetic Vertical Datum of 1929 "local" datum referenced on many existing drawings.
3. Vertical Datum equation: NAVD88 elevation = NGVD29 elevation + 2.664 feet.
4. Other dam crest features include:
   - –Stairs
   - –Roadway washdown connection recesses
   - –Plumbline wells
   - –Hoist tower
   - –Elevator tower
   - –Gantry crane power outlet recesses
   - –Spillway bridge and piers
   - –Power intake sidewalk, block and outlet gate storage structures
5. * Sawcuts with mechanical excavation methods.
6. Structural concrete design is based on concrete having a minimum specified compressive strength of 4000 psi at 28 days.

ALWAYS THINK SAFETY

U.S. DEPARTMENT OF THE INTERIOR
BUREAU OF RECLAMATION

CENTRAL VALLEY PROJECT – CALIFORNIA
KENNETT DIVISION

SHASTA DAM FEASIBILITY

18.5 FT. DAM RAISE

SPILLWAY – SECTIONS AND DETAILS

PREPARED BY J. LABOON
REVIEWED BY T. HEPLER

SHEET 1 OF 2

PLATE 8

DATE AND TIME PLOTTED MARCH 31, 2011 13:07
PLOTTED BY CJOYCE

CAD SYSTEM AutoCAD Rel. 18.0s
CAD FILENAME PLATE 8.DWG

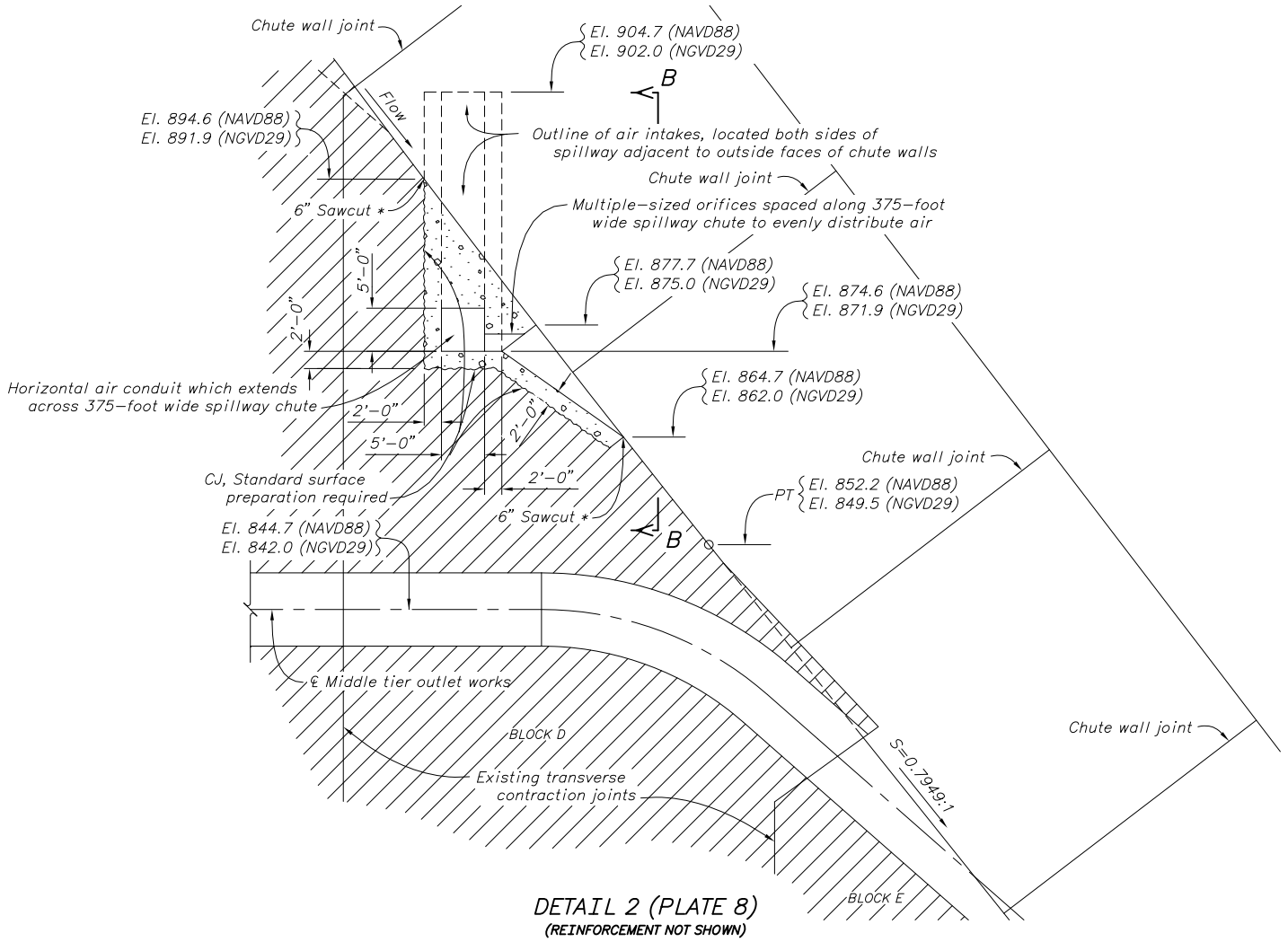

DETAIL 2 (PLATE 8)

(REINFORCEMENT NOT SHOWN)

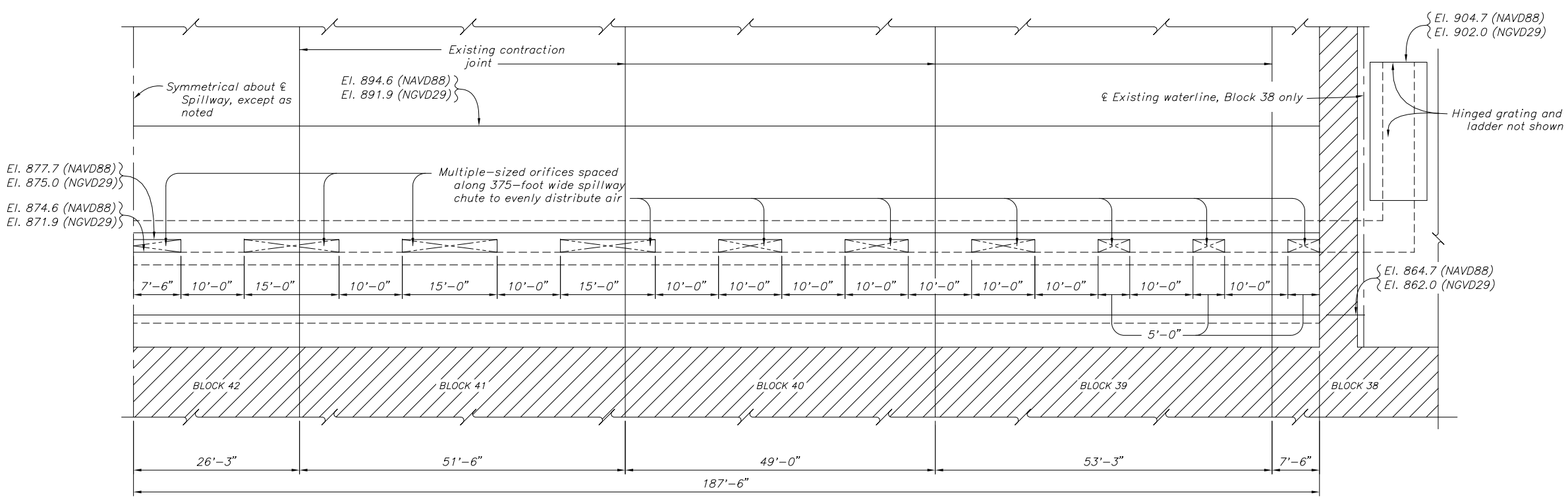

SECTION B-B

10 0 10 20 30
SCALE OF FEET

NOTES

1. NAVD88 – North American Vertical Datum of 1988. used in the feasibility design.
2. NGVD29 – National Geodetic Vertical Datum of 1929 "local" datum referenced on many existing drawings.
3. Vertical Datum equation: NAVD88 elevation = NGVD29 elevation + 2.664 feet.
4. Other dam crest features include:
   - –Stairs
   - –Roadway washdown connection recesses
   - –Plumbline wells
   - –Hoist tower
   - –Elevator tower
   - –Gantry crane power outlet recesses
   - –Spillway bridge and piers
   - –Power intake sidewalk, block and outlet gate storage structures
5. * Sawcuts with mechanical excavation methods.
6. Structural concrete design is based on concrete having a minimum specified compressive strength of 4000 psi at 28 days.

ALWAYS THINK **SAFETY**

U.S. DEPARTMENT OF THE INTERIOR
BUREAU OF RECLAMATION

CENTRAL VALLEY PROJECT – CALIFORNIA

KENNETT DIVISION

SHASTA DAM FEASIBILITY

18.5 FT. DAM RAISE

SPILLWAY – SECTIONS AND DETAILS

PREPARED BY J. LABOON

REVIEWED BY T. HEPLER

SHEET 2 OF 2

PLATE 9

DATE AND TIME PLOTTED
MARCH 31, 2011 13:08
PLOTTED BY
CJOYCE

CAD SYSTEM
AutoCAD Rel. 18.0s
CAD FILENAME
PLATE 9.DWG

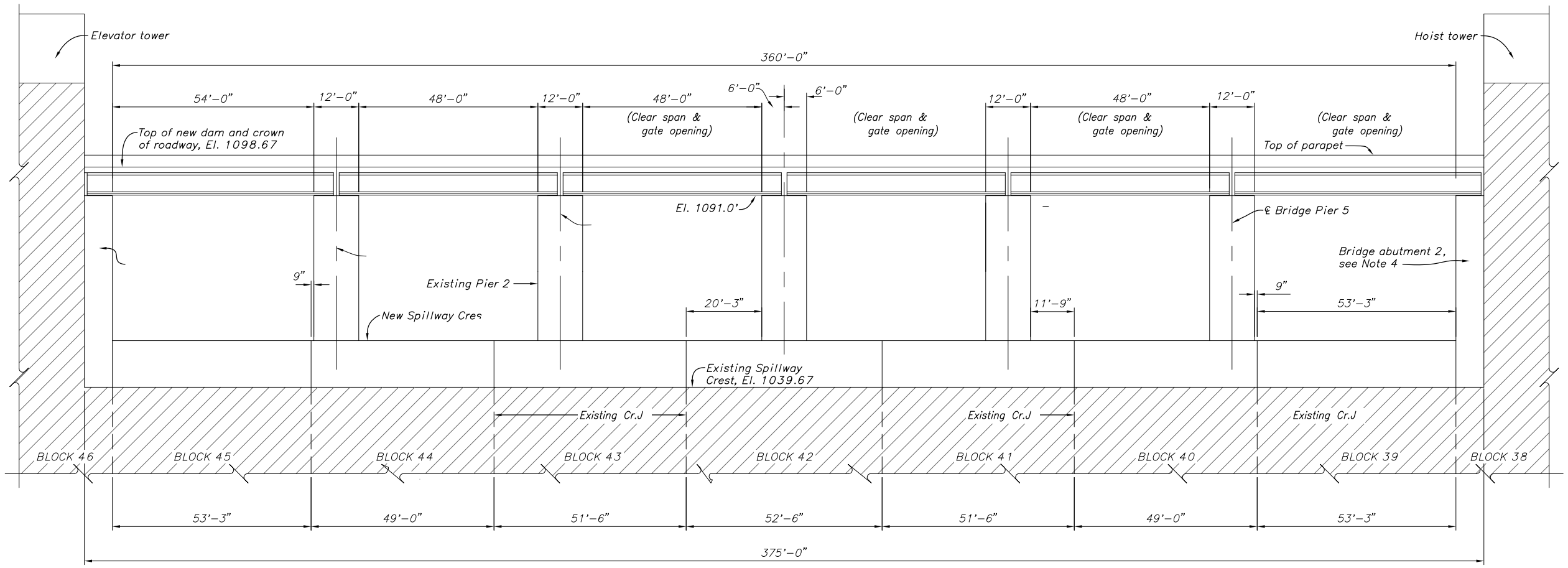

SPILLWAY ELEVATION @ BRIDGE CENTERLINE

16 0 16 32
SCALE OF FEET

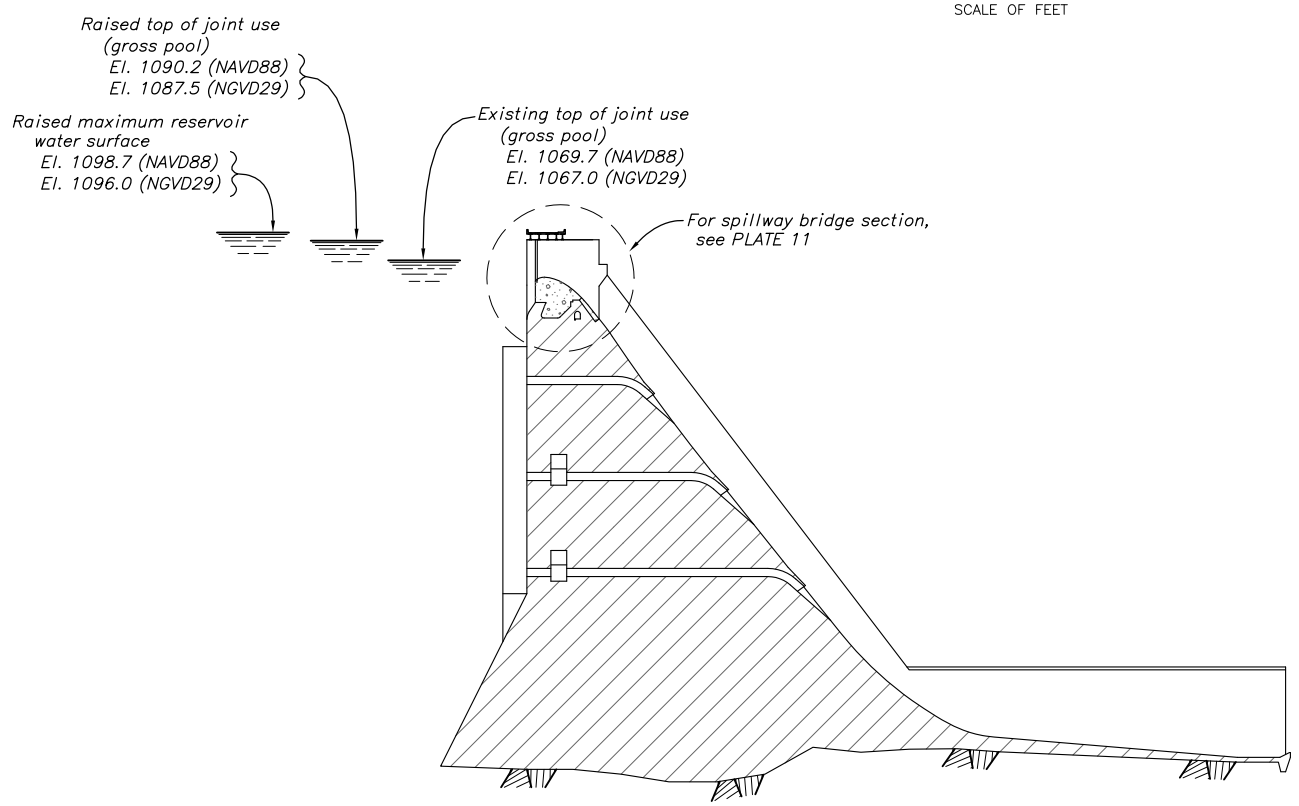

SECTION THRU SPILLWAY

NOTES

1. NAVD88 – North American Vertical Datum of 1988. Datum to be used in the feasibility design, therefore elevations shown on this drawing are NAVD88 elevations.
2. NGVD29 – National Geodetic Vertical Datum of 1929 "Local" datum referenced on many existing drawings.
3. Vertical Datum equation: NAVD88 elevation = NGVD29 elevation + 2.664 feet.
4. Existing bridge Piers 1 and 4 are extended to support new bridge spans. The extended piers will be designated as Abutments 1 and 2.
5. Structural concrete design of cast–in–place concrete is based on concrete having a minimum specified compressive strength of 4,000 psi at 28 days.
6. Precast prestressed concrete beam design is based on concrete having a minimum compressive strength of 6,000 psi at 28 days.
7. All reinforcement shall have a minimum yield strength of 60 ksi and shall be epoxy coated.

ALWAYS THINK SAFETY

U.S. DEPARTMENT OF THE INTERIOR
BUREAU OF RECLAMATION

CENTRAL VALLEY PROJECT
KENNETT DIVISION

SHASTA DAM FEASIBILITY
18.5 FT. DAM RAISE
SPILLWAY BRIDGE
ELEVATION AND SECTION

PREPARED BY Jesus G. Romero P.E.
REVIEWED BY Jeff Baysinger P.E.
86-68140 WATER CONVEYANCE GROUP

DENVER, COLORADO
SHEET 1 OF 1

PLATE 10

DATE AND TIME PLOTTED
DECEMBER 17, 2007 14:19
PLOTTED BY
JROMERO

CAD SYSTEM
AutoCAD Rel. 16.2s
CAD FILENAME
SPILLWAY BRIDGE LAYOUT BY JGR.DWG

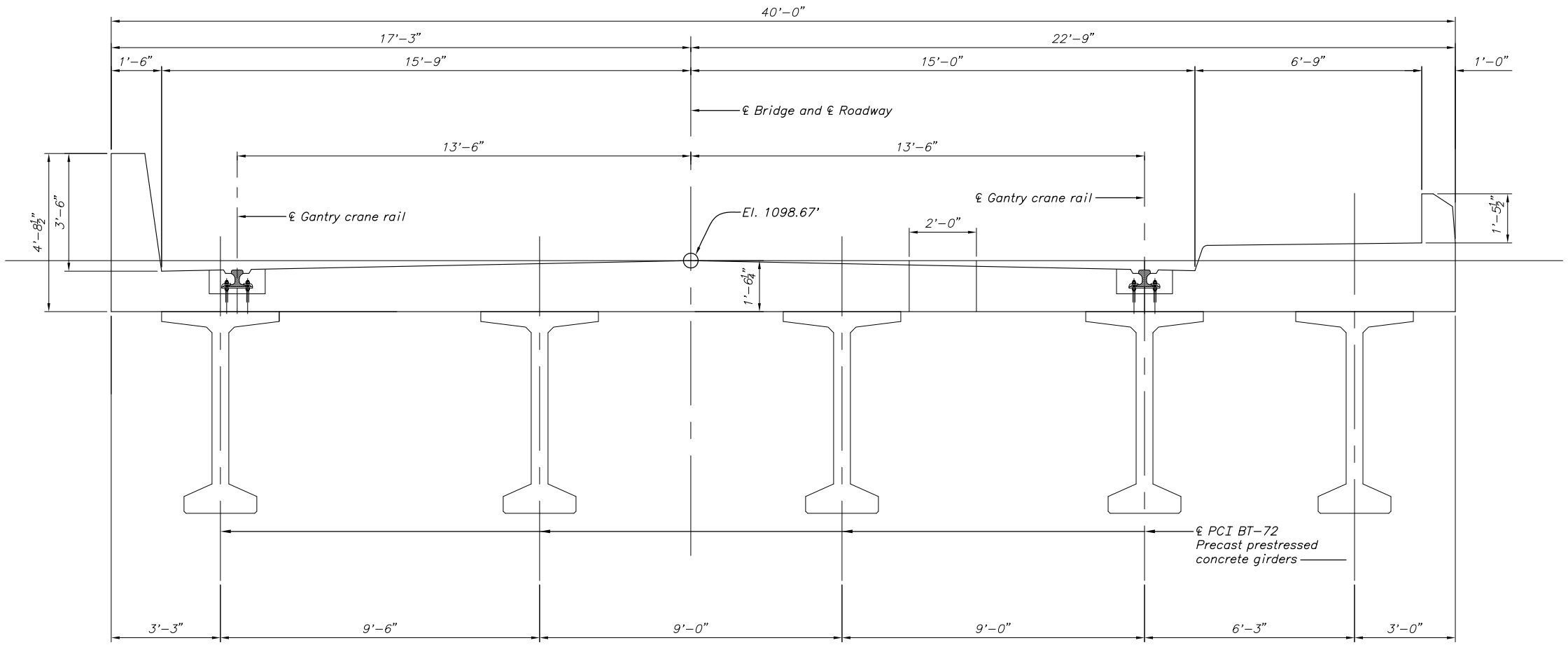

SPILLWAY BRIDGE CROSS SECTION

1 0 1 2 3 4 5
SCALE OF FEET

NOTES

1. NAVD88 – North American Vertical Datum of 1988. Datum to be used in the feasibility design, therefore elevations shown on this drawing are NAVD88 elevations.
2. NGVD29 – National Geodetic Vertical Datum of 1929 "Local" datum referenced on many existing drawings.
3. Vertical Datum equation: NAVD88 elevation = NGVD29 elevation + 2.664 feet.
4. Precast prestressed concrete beam design is based on concrete having a minimum compressive strength of 6,000 psi at 28 days.
5. All reinforcement shall have a minimum yield strength of 60 ksi and shall be epoxy coated.

ALWAYS THINK SAFETY

U.S. DEPARTMENT OF THE INTERIOR
BUREAU OF RECLAMATION

CENTRAL VALLEY PROJECT

KENNETT DIVISION

SHASTA DAM FEASIBILITY

18.5 FT. DAM RAISE

SPILLWAY BRIDGE SECTION

PREPARED BY Jesus G. Romero, P.E.

REVIEWED BY Jeff Baysinger, P.E.
86-68140 WATER CONVEYANCE GROUP

DENVER, COLORADO
SHEET 1 OF 1

PLATE 11

DATE AND TIME PLOTTED
PLOTTED BY JROMERO

CAD SYSTEM AutoCAD Rel. 16.2s
CAD FILENAME SPILLWAY BRIDGE LAYOUT BY JGR.DWG

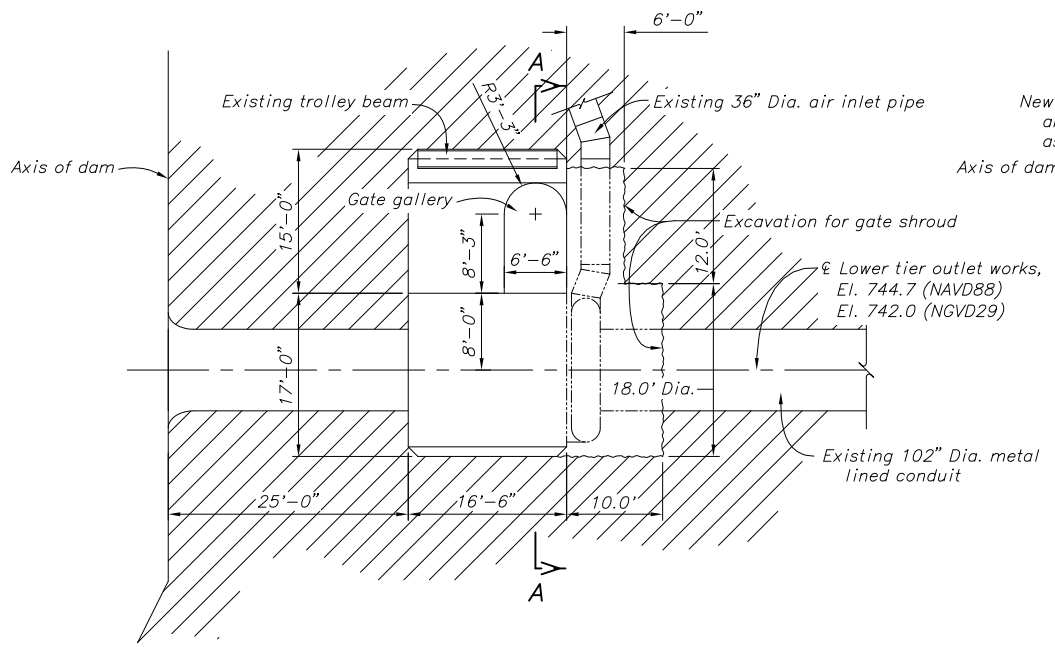

(EXCAVATION)

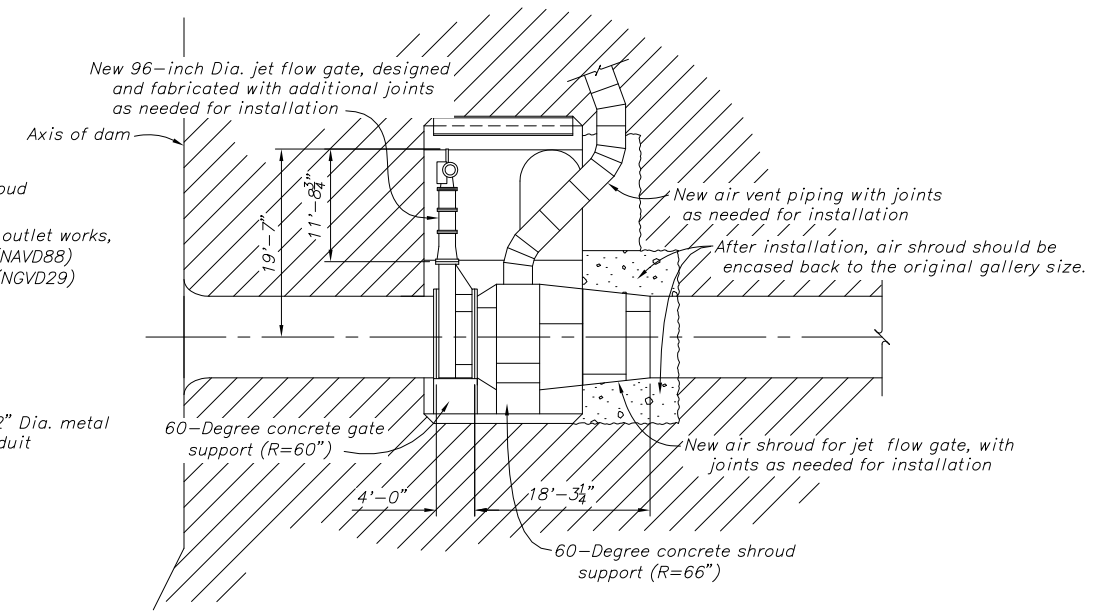

(MECHANICAL)

DETAIL 3 (PLATE 8)

NOTES

1. NAVD88 – North American Vertical Datum of 1988 used in the feasibility design.
2. NGVD29 – National Geodetic Vertical Datum of 1929 "local" datum referenced on many existing drawings.
3. Vertical Datum equation: NAVD88 elevation = NGVD29 elevation + 2.664 feet.
4. * Sawcuts with mechanical excavation methods.
5. Structural concrete design is based on concrete having a minimum specified compressive strength of 4000 psi at 28 days.

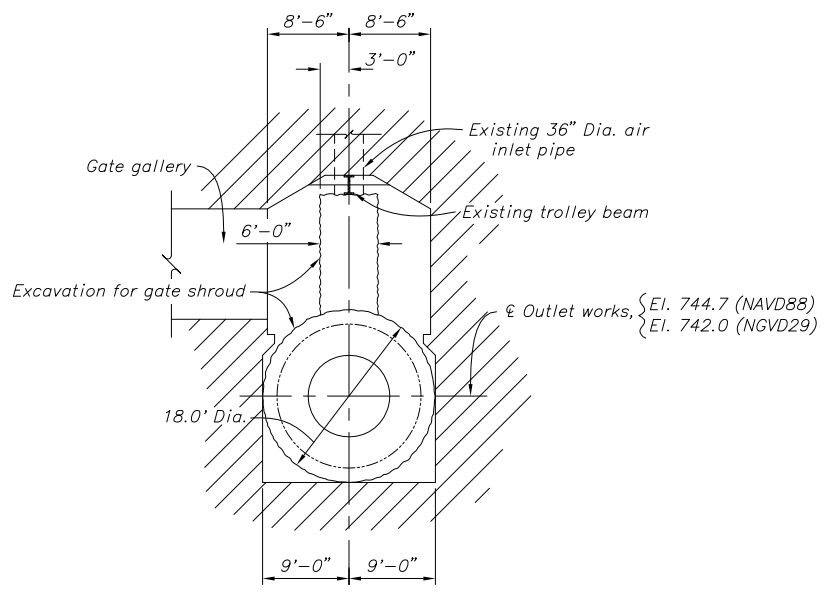

SECTION A–A

10 0 10 20 30
SCALE OF FEET

ALWAYS THINK SAFETY

U.S. DEPARTMENT OF THE INTERIOR
BUREAU OF RECLAMATION

CENTRAL VALLEY PROJECT – CALIFORNIA

KENNETT DIVISION

SHASTA DAM FEASIBILITY

18.5 FT. DAM RAISE

OUTLET WORKS – SECTION AND DETAIL

PREPARED BY J. LABOON

REVIEWED BY T. HEPLER

SHEET 1 OF 1

PLATE 12

DATE AND TIME PLOTTED MARCH 31, 2011 13:10
PLOTTED BY CJOYCE

CAD SYSTEM AutoCAD Rel. 18.0s
CAD FILENAME PLATE 12.DWG

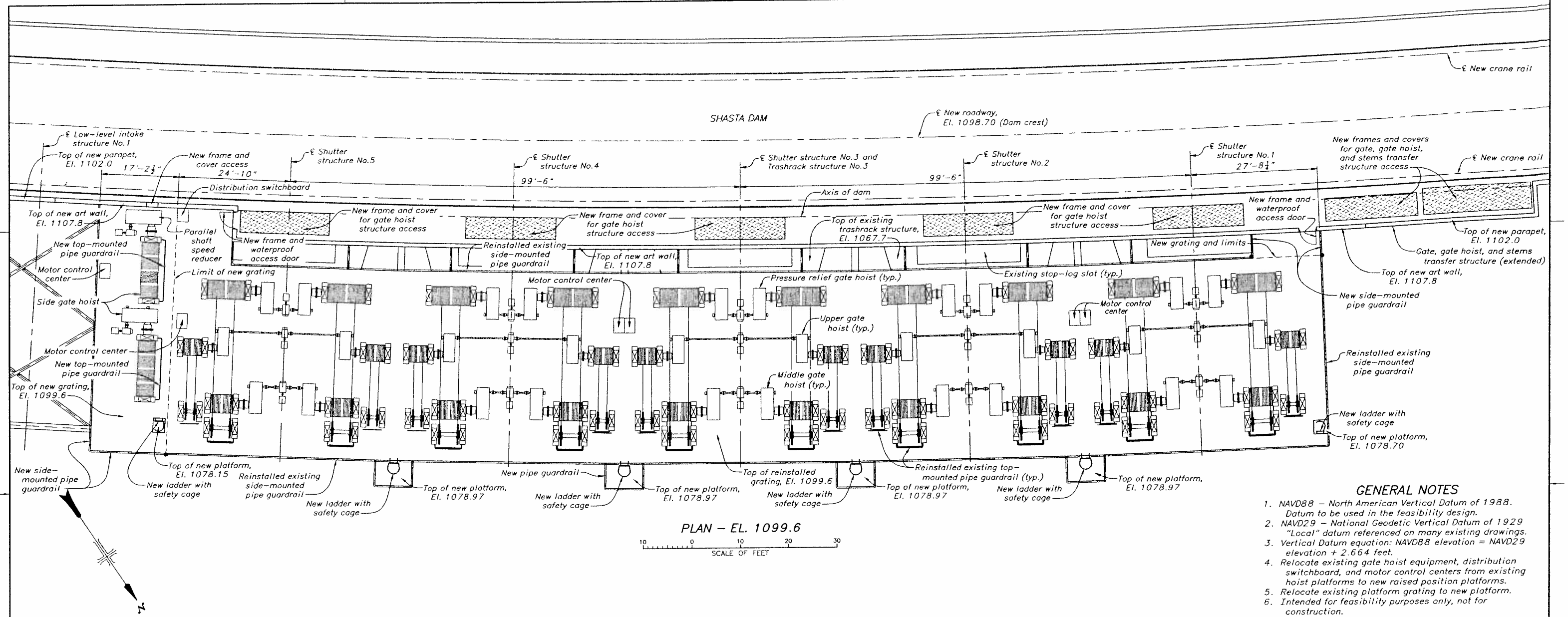

PLAN – EL. 1099.6

10 0 10 20 30
SCALE OF FEET

GENERAL NOTES

1. NAVD88 – North American Vertical Datum of 1988. Datum to be used in the feasibility design.
2. NAVD29 – National Geodetic Vertical Datum of 1929 "Local" datum referenced on many existing drawings.
3. Vertical Datum equation: NAVD88 elevation = NAVD29 elevation + 2.664 feet.
4. Relocate existing gate hoist equipment, distribution switchboard, and motor control centers from existing hoist platforms to new raised position platforms.
5. Relocate existing platform grating to new platform.
6. Intended for feasibility purposes only, not for construction.

ALWAYS THINK SAFETY

U.S. DEPARTMENT OF THE INTERIOR
BUREAU OF RECLAMATION

CENTRAL VALLEY PROJECT
KENNETT DIVISION – CALIFORNIA

SHASTA DAM FEASIBILITY

18.5 FT. DAM RAISE

TEMPERATURE CONTROL DEVICE

PLAN – EL. 1099.6

PREPARED BY B. D. VANOTTERLOO
REVIEWED BY R. J. BARTHEL, P.E.
PLANT STRUCTURAL GROUP

DENVER, COLORADO 2007 10-24 SHEET 1 OF 1

PLATE 13

DATE AND TIME PLOTTED FEBRUARY 10, 2011 08:35
PLOTTED BY RBARTHEL

CAD SYSTEM AutoCAD Rev. 18.0a
CAD FILENAME: PLATE 13_TCD1.DWG

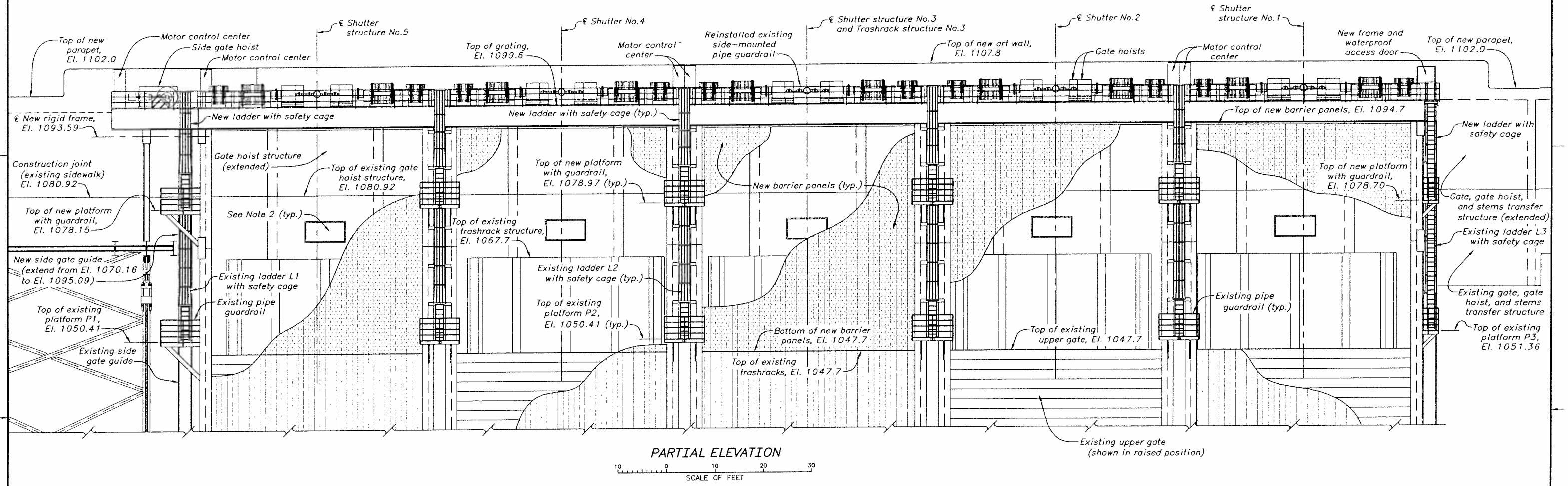

PARTIAL ELEVATION

10 0 10 20 30
SCALE OF FEET

NOTES

1. For general notes, see Plate 13.
2. Remove existing hatch frame and cover and replace with new waterproof bulkhead hatch.

ALWAYS THINK SAFETY

U.S. DEPARTMENT OF THE INTERIOR
BUREAU OF RECLAMATION
CENTRAL VALLEY PROJECT
KENNETT DIVISION – CALIFORNIA

SHASTA DAM FEASIBILITY
18.5 FT. DAM RAISE
TEMPERATURE CONTROL DEVICE
PARTIAL ELEVATION

PREPARED BY B. D. VANOTTERLOO
REVIEWED BY R. J. BARTHEL, P.E.
PLANT STRUCTURES GROUP

DENVER, COLORADO 2007-10-24
SHEET 1 OF 1

PLATE 14

DATE AND TIME PLOTTED
FEBRUARY 16, 2011 08:40
PLOTTED BY
RBARTHEL

CAD SYSTEM
AutoCAD Rel. 14.0.3
CAD FILENAME
PLATE_14_TCD2.DWG

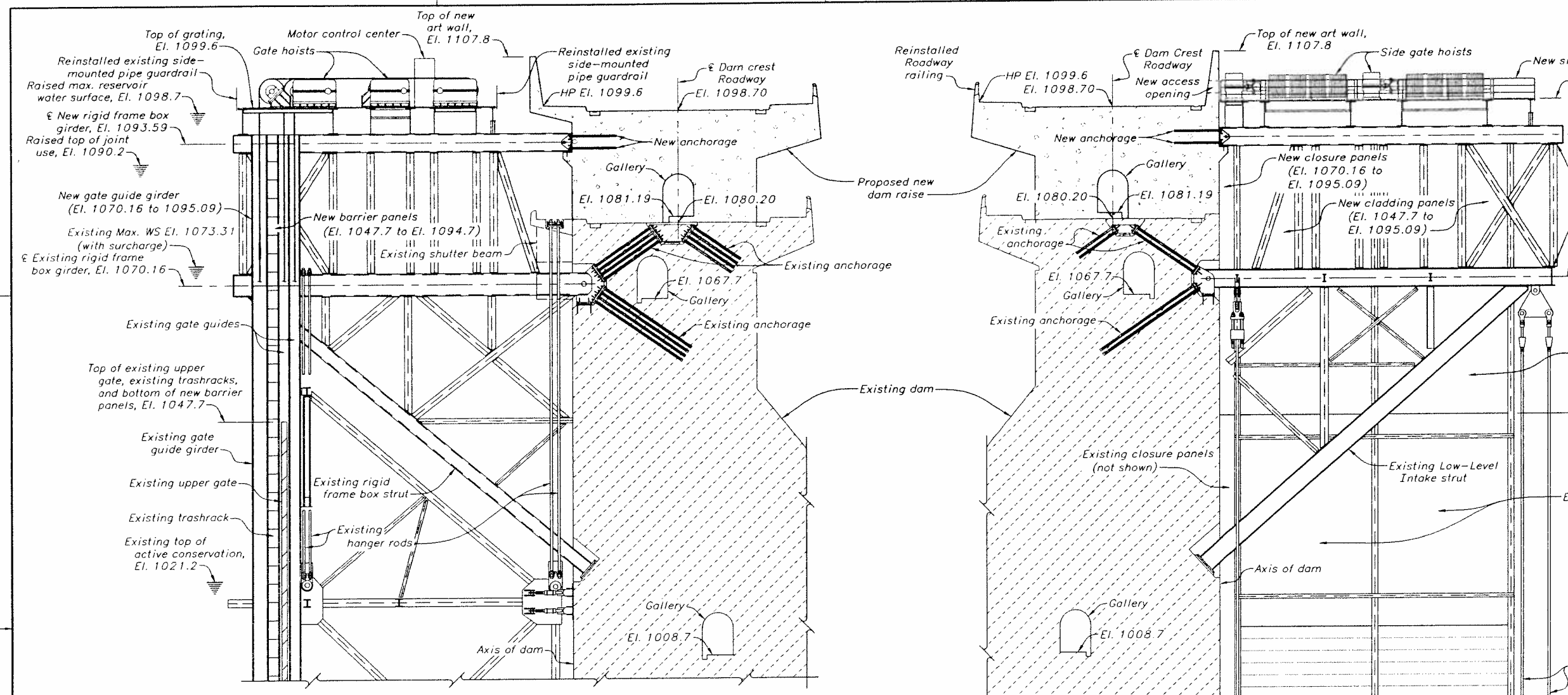

SECTION THRU UNIT 3

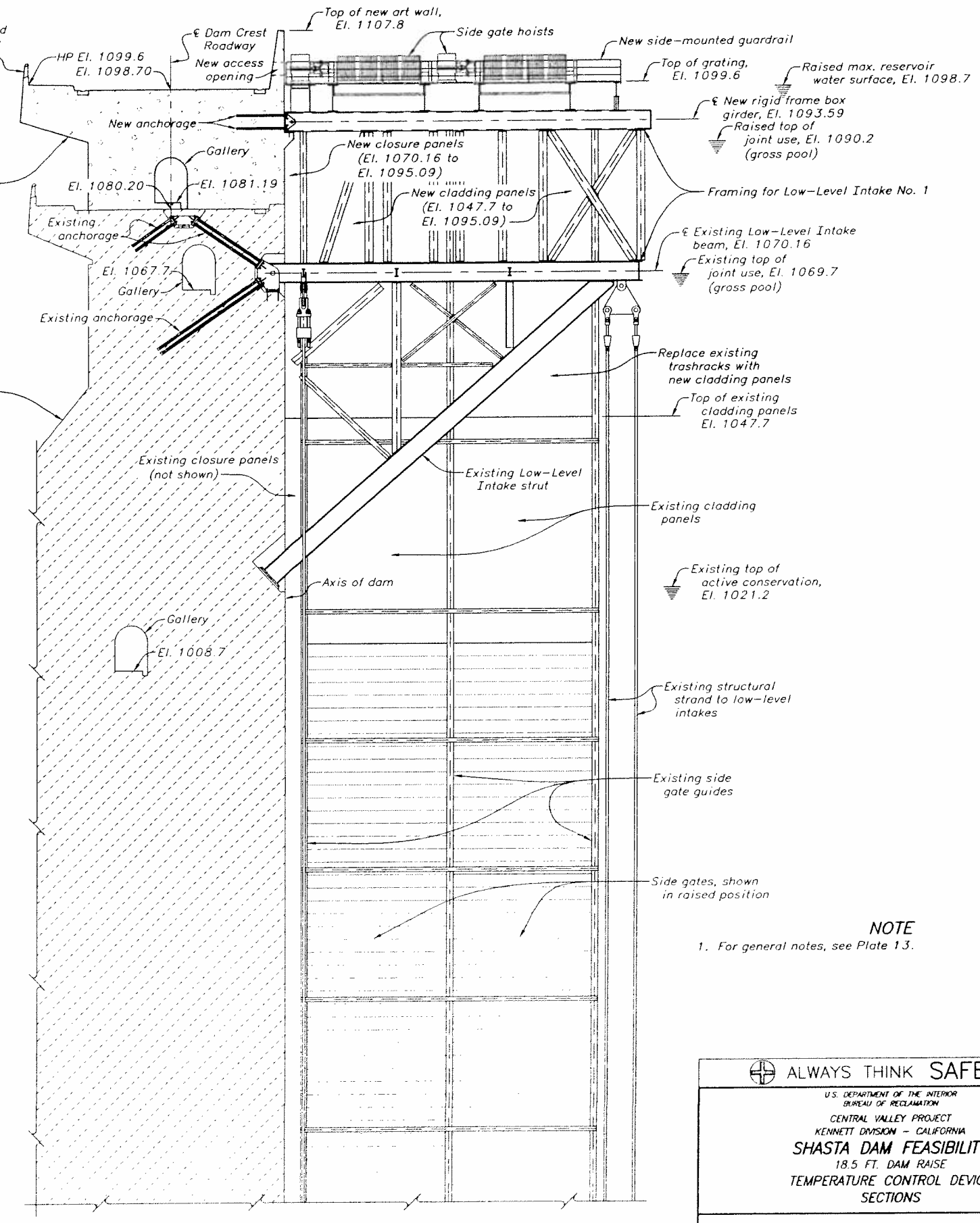

SECTION THRU LOW-LEVEL INTAKE NO. 1

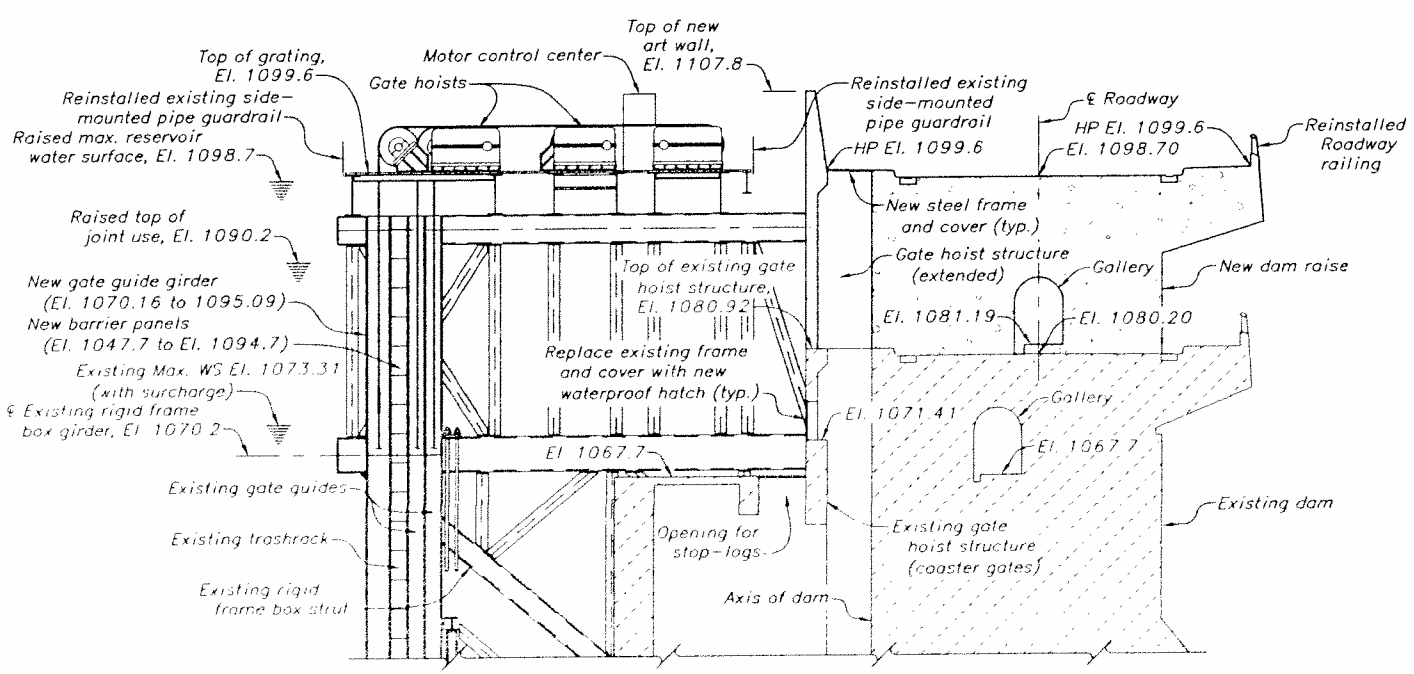

SECTION THRU ℄ UNIT 3

10 0 10 20 30
SCALE OF FEET

NOTE

1. For general notes, see Plate 13.

ALWAYS THINK SAFETY

U.S. DEPARTMENT OF THE INTERIOR
BUREAU OF RECLAMATION
CENTRAL VALLEY PROJECT
KENNETT DIVISION - CALIFORNIA

SHASTA DAM FEASIBILITY
18.5 FT. DAM RAISE
TEMPERATURE CONTROL DEVICE
SECTIONS

PREPARED BY B. D. VANOTTERLOO
REVIEWED BY R. J. BARTHEL, P.E.
PLANT STRUCTURES GROUP

DENVER, COLORADO 2007-10-24 SHEET 1 OF 1

PLATE 15

DATE AND TIME PLOTTED FEBRUARY 10, 2011 08:46
PLOTTED BY rbarthel

CAD SYSTEM AutoCAD Rel. 13.0a
CAD FILENAME
DATE FILE CREATED

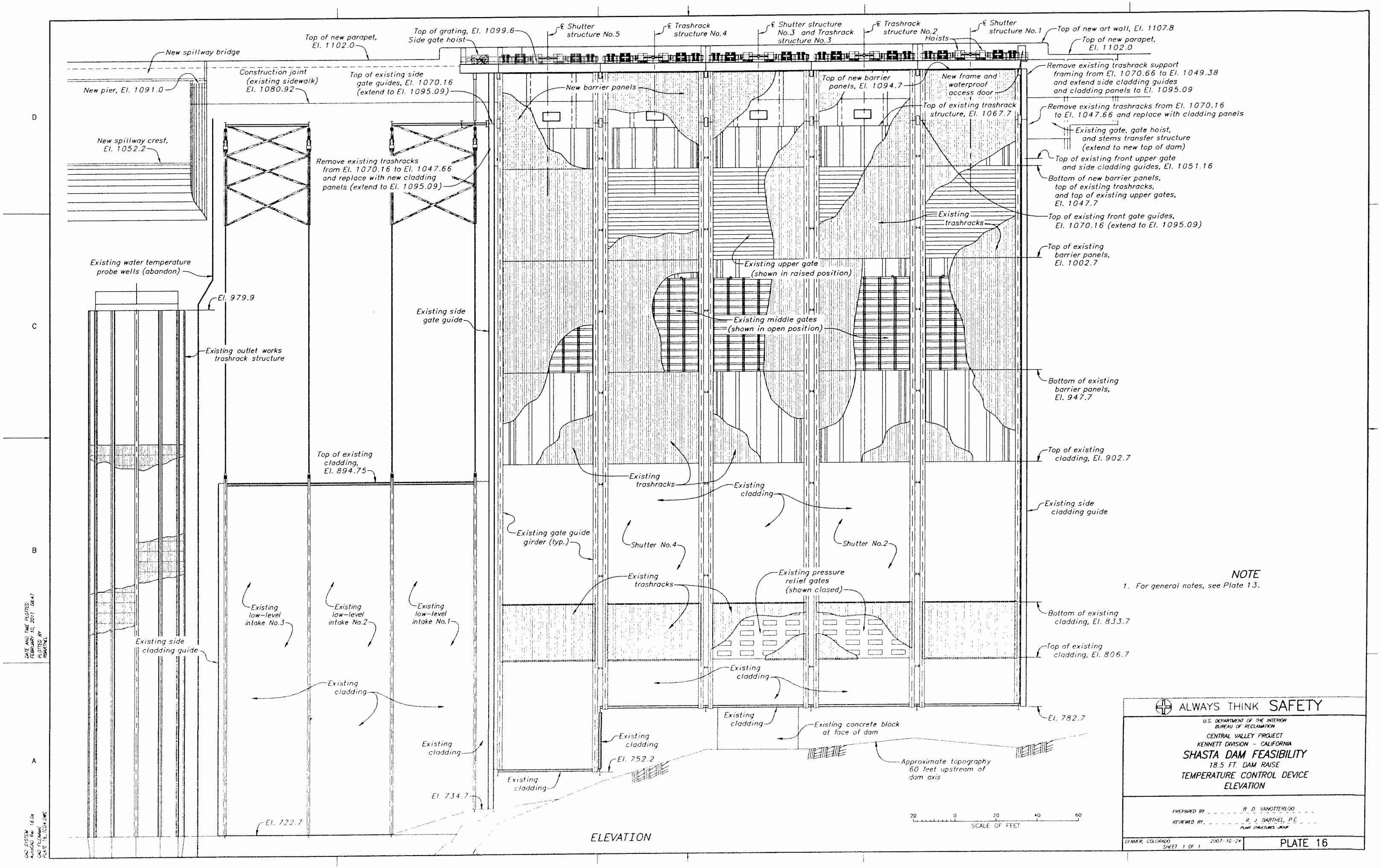
Top of new parapet, El. 1102.0
Top of grating, El. 1099.6
Side gate hoist
℄ Shutter structure No.5
℄ Trashrack structure No.4
℄ Shutter structure No.3 and Trashrack structure No.3
℄ Trashrack structure No.2
Hoists
℄ Shutter structure No.1
Top of new art wall, El. 1107.8
Top of new parapet, El. 1102.0
New spillway bridge
Construction joint (existing sidewalk) El. 1080.92
Top of existing side gate guides, El. 1070.16 (extend to El. 1095.09)
New pier, El. 1091.0
New barrier panels
Top of new barrier panels, El. 1094.7
New frame and waterproof access door
Top of existing trashrack structure, El. 1067.7
Remove existing trashrack support framing from El. 1070.66 to El. 1049.38 and extend side cladding guides and cladding panels to El. 1095.09
Remove existing trashracks from El. 1070.16 to El. 1047.66 and replace with cladding panels
Existing gate, gate hoist, and stems transfer structure (extend to new top of dam)
New spillway crest, El. 1052.2
Remove existing trashracks from El. 1070.16 to El. 1047.66 and replace with new cladding panels (extend to El. 1095.09)
Top of existing front upper gate and side cladding guides, El. 1051.16
Bottom of new barrier panels, top of existing trashracks, and top of existing upper gates, El. 1047.7
Existing trashracks
Top of existing front gate guides, El. 1070.16 (extend to El. 1095.09)
Top of existing barrier panels, El. 1002.7
Existing water temperature probe wells (abandon)
Existing upper gate (shown in raised position)
El. 979.9
Existing side gate guide
Existing middle gates (shown in open position)
Existing outlet works trashrack structure
Bottom of existing barrier panels, El. 947.7
Top of existing cladding, El. 894.75
Top of existing cladding, El. 902.7
Existing trashracks
Existing cladding
Existing side cladding guide
Existing gate guide girder (typ.)
Shutter No.4
Shutter No.2
Existing trashracks
Existing pressure relief gates (shown closed)
Existing low-level intake No.3
Existing low-level intake No.2
Existing low-level intake No.1
Bottom of existing cladding, El. 833.7
Existing side cladding guide
Top of existing cladding, El. 806.7
Existing cladding
Existing cladding
Existing cladding
El. 782.7
Existing concrete block at face of dam
Existing cladding
El. 752.2
Approximate topography 60 feet upstream of dam axis
Existing cladding
El. 734.7
El. 722.7
20 0 20 40 60
SCALE OF FEET
ELEVATION
D
C
B
A
NOTE
1. For general notes, see Plate 13.
ALWAYS THINK SAFETY
U.S. DEPARTMENT OF THE INTERIOR
BUREAU OF RECLAMATION
CENTRAL VALLEY PROJECT
KENNETT DIVISION - CALIFORNIA
SHASTA DAM FEASIBILITY
18.5 FT. DAM RAISE
TEMPERATURE CONTROL DEVICE
ELEVATION
PREPARED BY B. D. VANOTTERLOO
REVIEWED BY R. J. BARTHEL, P.E.
PLANT STRUCTURES GROUP
DENVER, COLORADO
SHEET 1 OF 1
2007-10-24
PLATE 16
DATE AND TIME PLOTTED FEBRUARY 10, 2011 08:47
PLOTTED BY RBARTHEL
CAD SYSTEM AUTOCAD Rev. 18.0s
PLOTTER HP DESIGNJET 1055CA-DWG
PLATE 16_TCD4.DWG

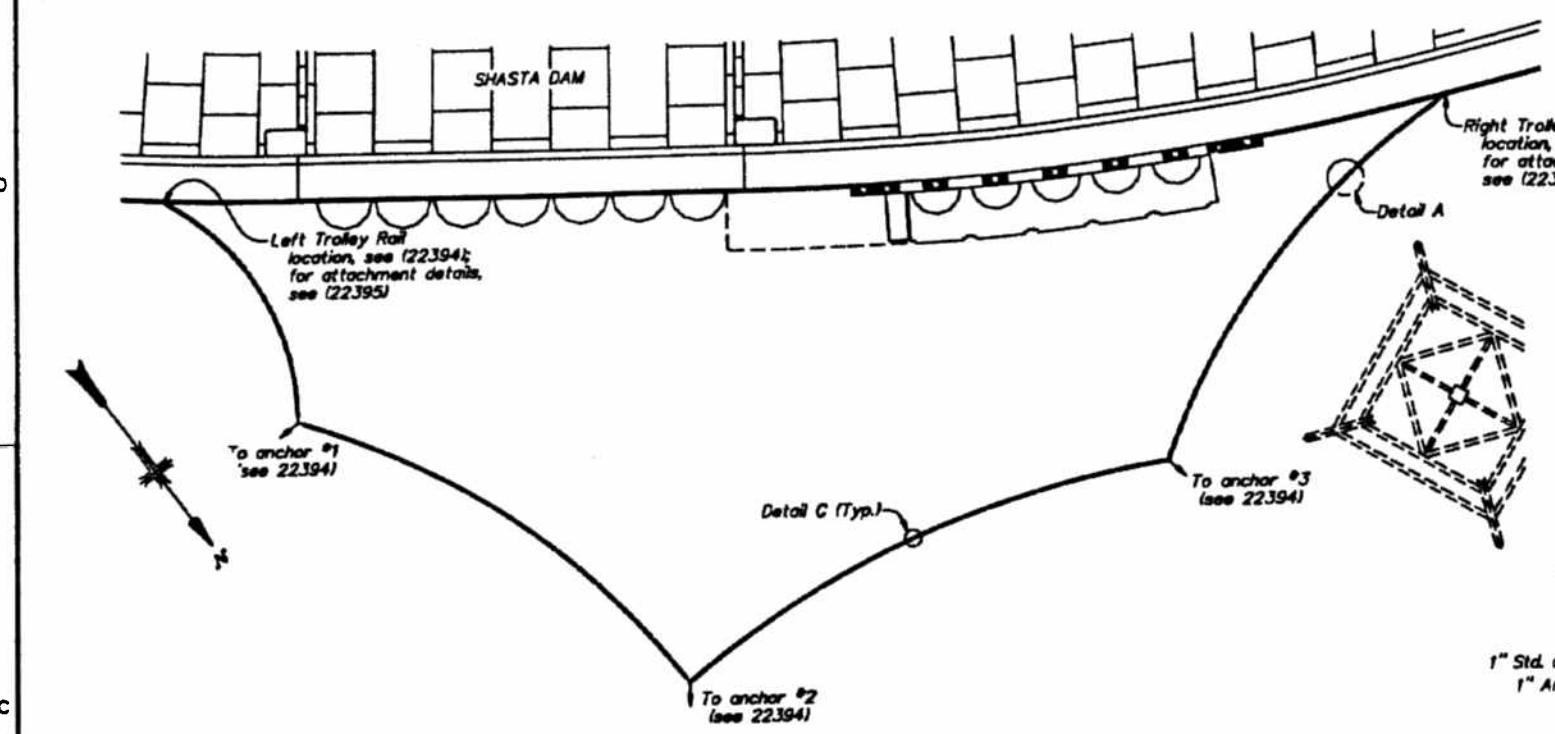

BOOM LAYOUT

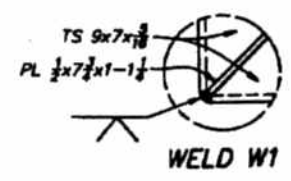

WELD W1

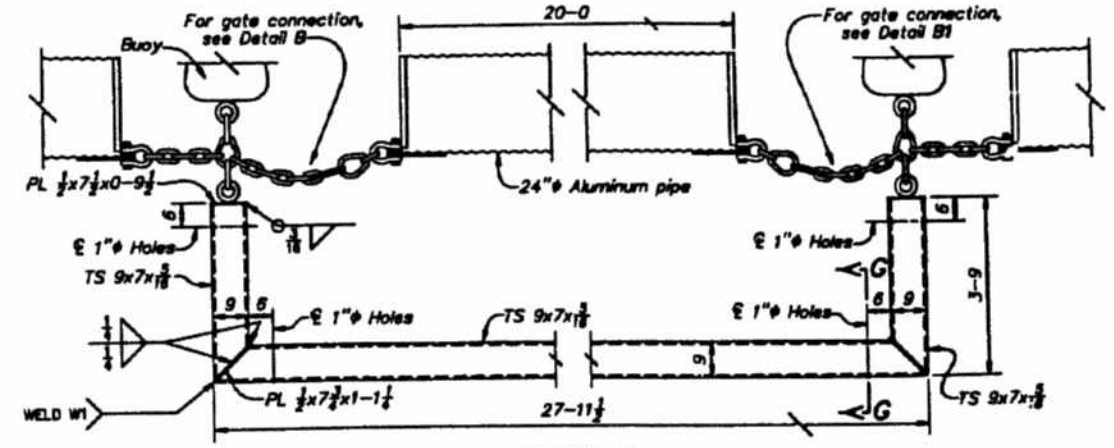

DETAIL A
GATE THROUGH DEBRIS BOOM
(1 REQUIRED)

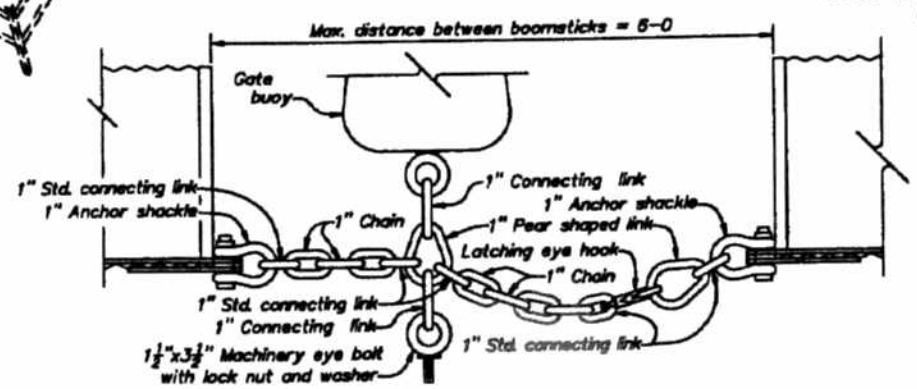

DETAIL B (AS SHOWN)
DETAIL B1 (OPPOSITE HAND)
GATE CONNECTION BETWEEN BOOMSTICKS

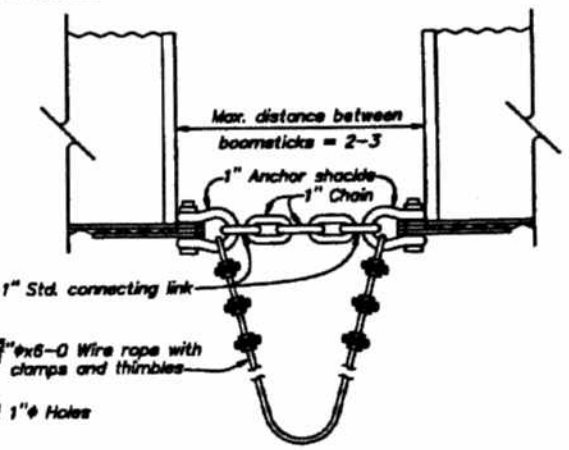

DETAIL C
CONNECTION BETWEEN BOOMSTICKS
(59 REQUIRED)

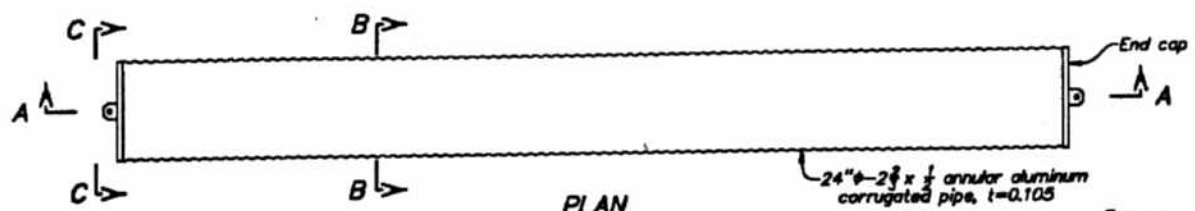

PLAN
BOOMSTICK
(65 REQUIRED)

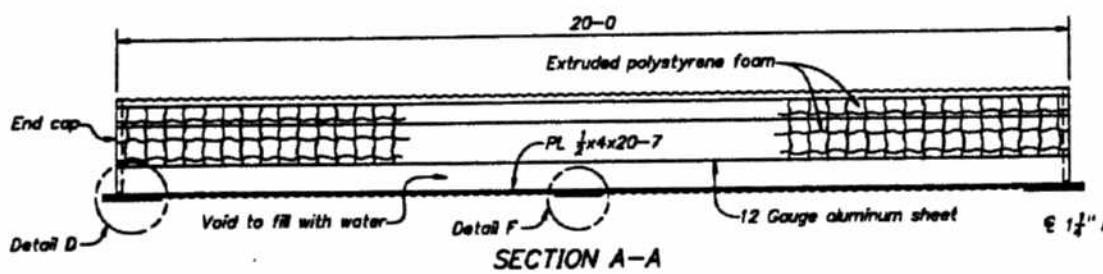

SECTION A-A

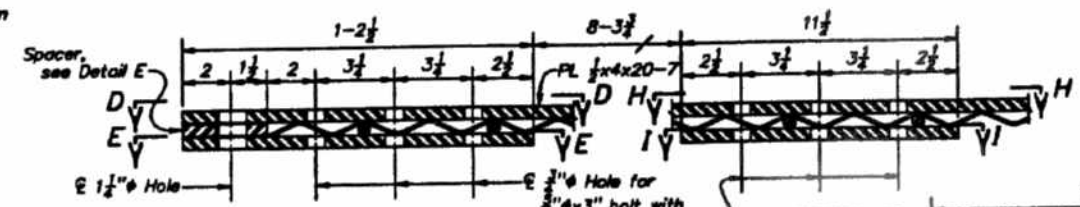

DETAIL D

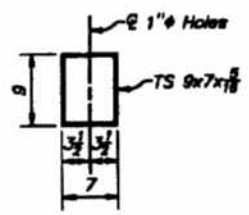

SECTION G-G

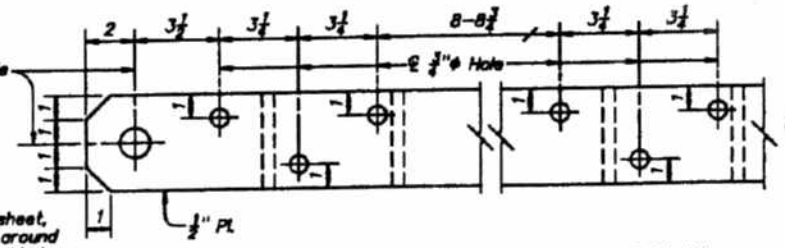

SECTION D-D

SECTION H-H

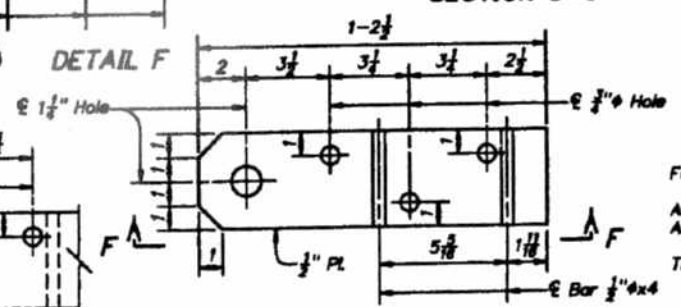

DETAIL F

SECTION E-E

NOTES

For anchor assembly attachment to face of dam, see 214-D-22395.
All material is steel unless otherwise noted.
All plate steel and structural steel shall be hot-dipped galvanized.
The chain and attachment fittings shall be either hot-dipped galvanized or mechanically galvanized.

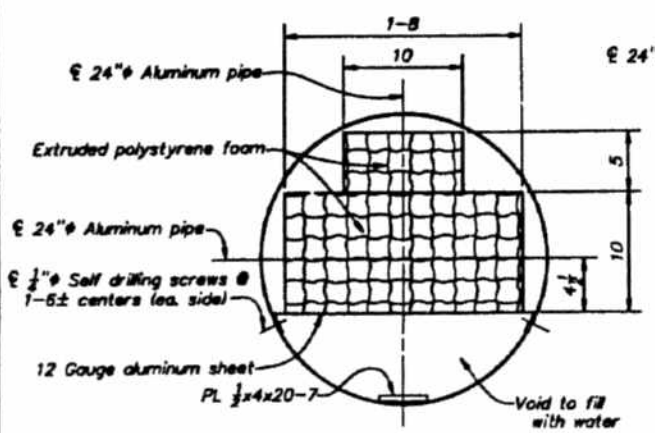

SECTION B-B

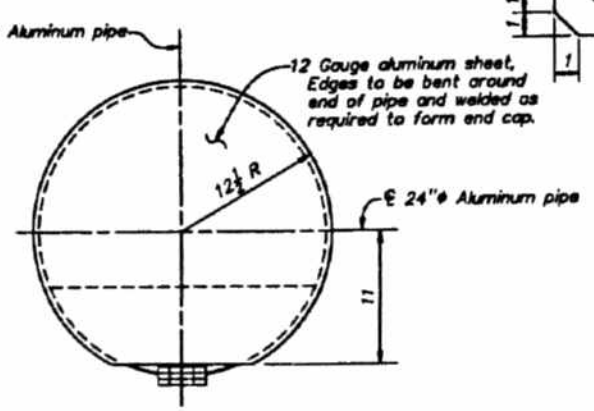

SECTION C-C
END CAP

DETAIL E
SPACER

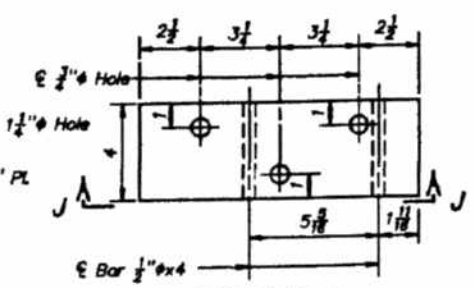

SECTION I-I

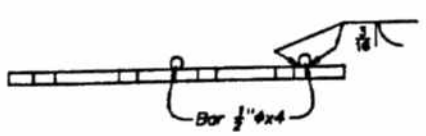

SECTION F-F

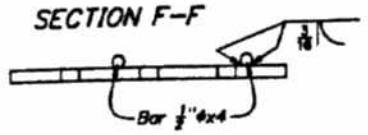

SECTION J-J

FOR AS-BUILT CONDITIONS SEE MANUFACTURERS DRAWING 214-D-23039 THRU 23052

ALWAYS THINK SAFETY

UNITED STATES
DEPARTMENT OF THE INTERIOR
BUREAU OF RECLAMATION
CENTRAL VALLEY PROJECT
SHASTA DIVISION – SHASTA DAM – CALIFORNIA

SHASTA TEMPERATURE CONTROL DEVICE
DEBRIS BOOM
BOOMSTICK PLAN, SECTIONS, AND DETAILS

DESIGNED R.L. WILLS/WRA — TECHNICAL APPROVAL R.W. LAFAND
DRAWN R.D. RODRIGUEZ — SUBMITTED R.R. O'SHEA
CHECKED D.E. SHERRAD — APPROVED J.W. HILL
CHIEF, PLANT STRUCTURES BRANCH

PLATE 17

214-D-22393

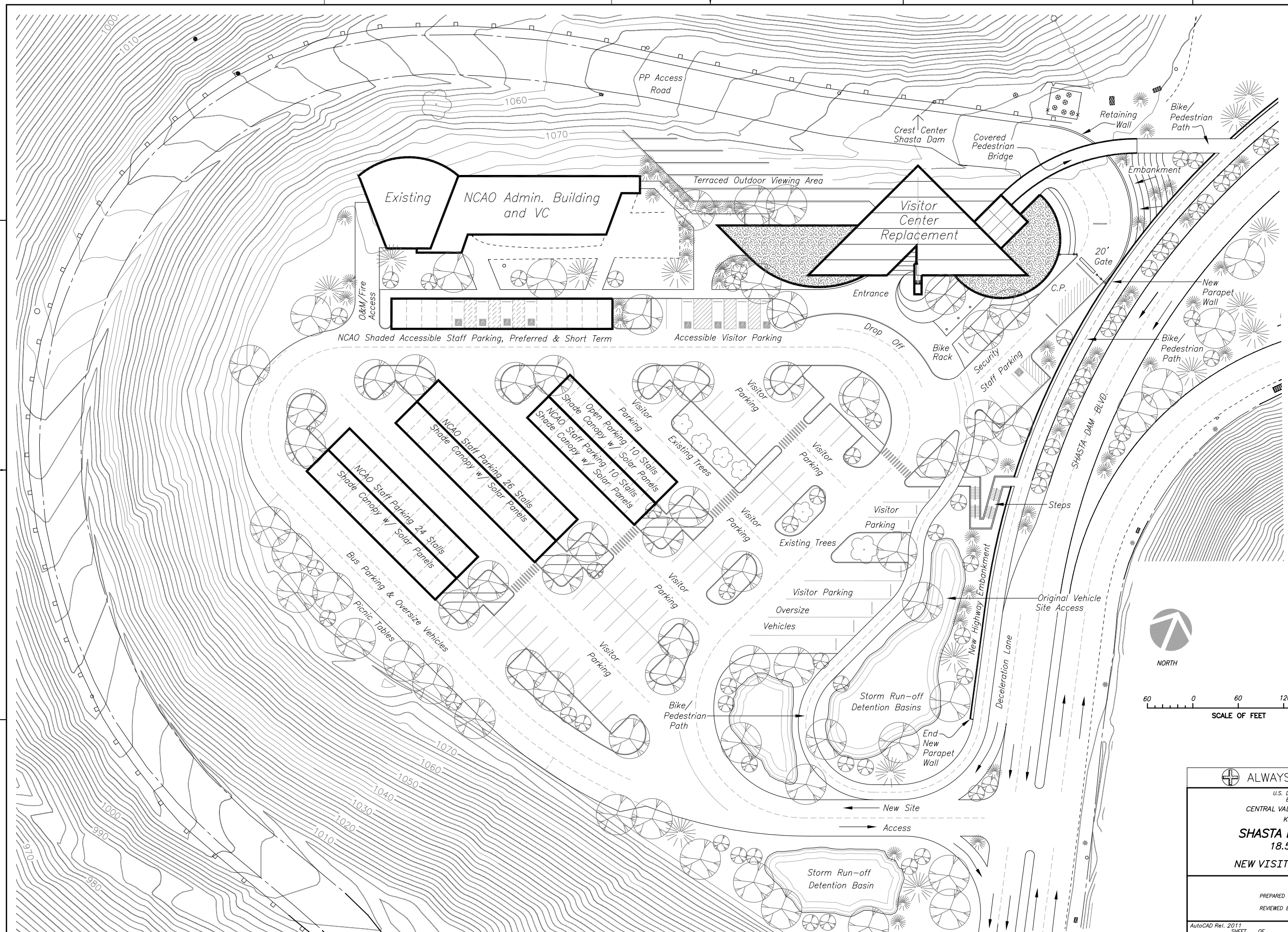

PARKING CAPACITIES

65 NCAO Staff Covered Parking
10 NCAO Staff Short Term & Other
75 TOTAL

78 Visitor Parking
17 Buses & Oversize Vehicles
95 TOTAL

ALWAYS THINK SAFETY

U.S. DEPARTMENT OF THE INTERIOR
BUREAU OF RECLAMATION
CENTRAL VALLEY PROJECT – CALIFORNIA
KENNETT DIVISION

SHASTA DAM FEASIBILITY
18.5 FT. DAM RAISE
NEW VISITOR CENTER, SITE PLAN

PREPARED BY J.F. Pattie
REVIEWED BY J. Neumaier

AutoCAD Rel. 2011
SHEET OF

PLATE 18

DATE AND TIME PLOTTED
PLOTTED BY
CAD SYSTEM
CAD FILENAME

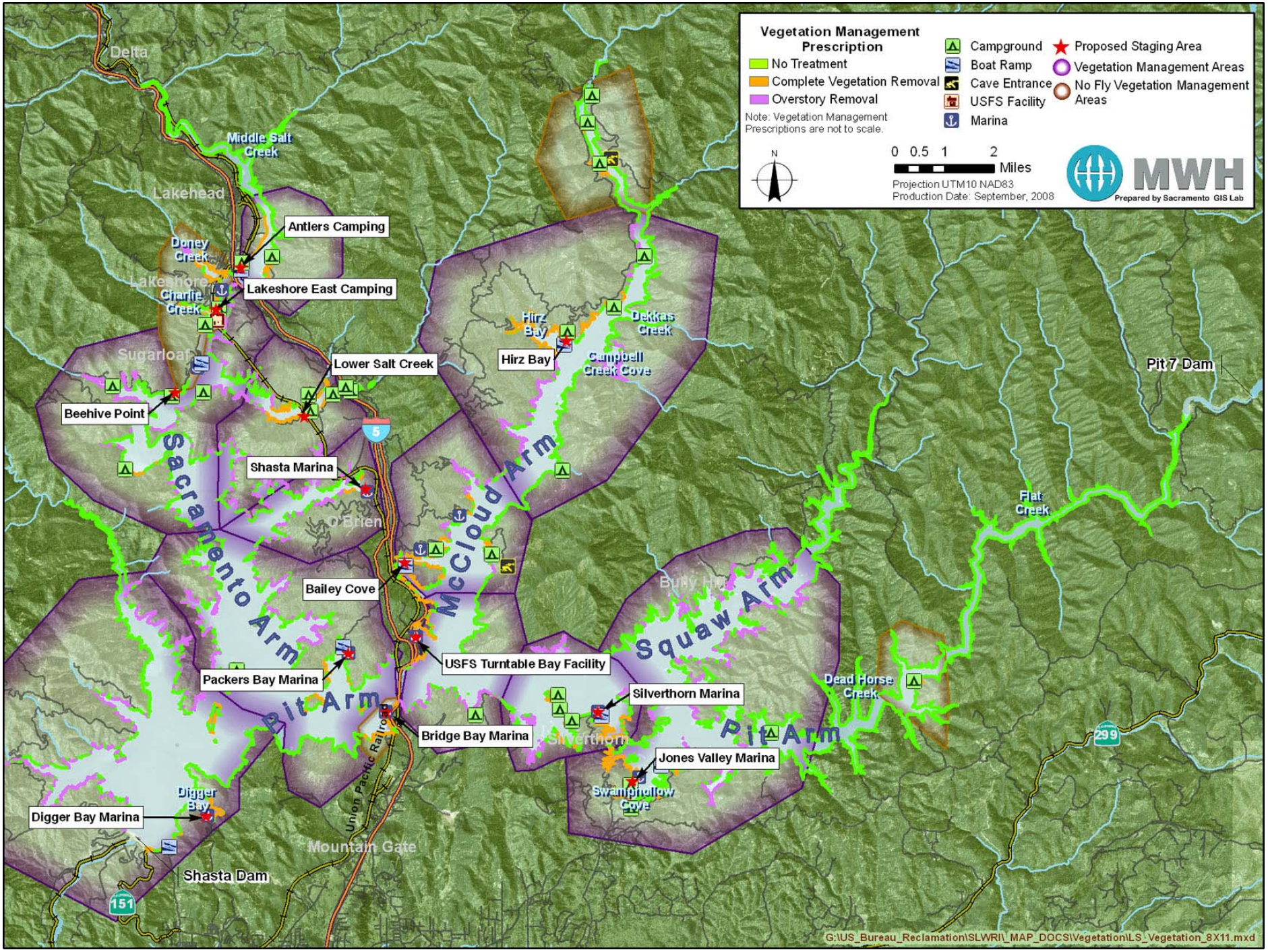
Vegetation Management Prescription
No Treatment
Complete Vegetation Removal
Overstory Removal
Note: Vegetation Management Prescriptions are not to scale.
Campground
Boat Ramp
Cave Entrance
USFS Facility
Marina
Proposed Staging Area
Vegetation Management Areas
No Fly Vegetation Management Areas
N
0 0.5 1 2
Miles
Projection UTM10 NAD83
Production Date: September, 2008
MWH
Prepared by Sacramento GIS Lab
Delta
Middle Salt Creek
Lakehead
Antlers Camping
Doney Creek
Lakeshore East Camping
Lakeshore
Charlie Creek
Sugarloaf
Lower Salt Creek
Beehive Point
Shasta Marina
Sacramento Arm
O'Brien
Bailey Cove
McCloud Arm
Hirz Bay
Hirz Bay
Dekkas Creek
Campbell Creek Cove
Pit 7 Dam
Flat Creek
Bully Hill
Squaw Arm
Packers Bay Marina
USFS Turntable Bay Facility
Pit Arm
Silverthorn Marina
Dead Horse Creek
Bridge Bay Marina
Silverthorn
Pit Arm
Jones Valley Marina
Swamphollow Cove
Digger Bay
Digger Bay Marina
Union Pacific Railroad
Mountain Gate
Shasta Dam
5
299
151
G:\US_Bureau_Reclamation\SLWRI_MAP_DOCS\Vegetation\LS_Vegetation_8X11.mxd

PLATE 19