EXHIBIT B

SITES PROJECT SPECIFIC INFORMATION, CAPACITY INTEREST AND SITES PROJECT FACILITIES

This Exhibit is intended to describe the Parties' understanding of the facilities included in the Sites Project, their use by the Sites ~~Project~~ Authority and Storage Partners, and the Capacity Interest of Storage Partners.

PROJECT SPECIFIC INFORMATION

TABLE B1. SITES PROJECT FACILITIES AND PARTNER AGREEMENTS

	Sites Owned Facilities	Federal Facilities	Partner Facilities
Base Facilities	▪ Sites Reservoir ▪ Sites Dam ▪ Golden Gate Dam ▪ Sites saddle dams/dikes ▪ Terminal Regulating Reservoir ▪ Terminal Regulating Reservoir Pumping Generating Plant ▪ Funks Pumping Generating Plant ▪ Power transmission lines ▪ Electrical substations ▪ Sites Lodoga Bridge ▪ Other support facilities • Pipelines (Terminal Regulating Reservoir, Funks) • Maxwell Intertie Pipeline • Inlet/outlet tower • Transition manifold • Maintenance and storage building • Administration and operations building • Recreation areas including day use boat ramp	▪ Red Bluff Pumping Plant ▪ Portion of Tehama-Colusa Canal from Red Bluff Diversion to Funks Reservoir ▪ Funks Reservoir ▪ Portion of Tehama-Colusa Canal from Funks Reservoir to the terminus of the Tehama-Colusa Canal	▪ Portion of Glenn Colusa Irrigation District Main Canal from the Hamilton City Pump Station to the Terminal Regulating Reservoir ▪ Hamilton City Pumping Plant

	Sites Owned Facilities	Federal Facilities	Partner Facilities
Downstream Facilities	▪ Dunnigan Pipeline and associated facilities	▪ N/A	▪ Wallace Weir ▪ Knights Landing Outfall Gates ▪ Knights Landing Ridge Cut ▪ Colusa Basin Drain south of Balsdon Weir
Partner Agreements	▪ Facility Use Agreement between the Sites Authority and Tehama-Colusa Canal Authority, dated [_]. ▪ Facility Use Agreement between the Sites Authority and Glenn-Colusa Irrigation District, dated [_]. ▪ Exchange Agreement between the Sites Authority and California Department of Water Resources, dated [_]. ▪ Conveyance Agreement between Sites Authority and California Department of Water Resources, dated [ ]. ▪ Refuge Water Donation Agreement between Sites Authority and Reclamation, dated [ ]. ▪ Wheeling agreements between Sites Authority, Richvale Irrigation District, and Western Canal Water District dated (20XX) and dated (20XX) respectively. ▪ Wheeling agreement between Sites Authority and Glenn-Colusa Irrigation District dated (20XX). ▪ Excess Capacity Contract between the Sites Authority and Reclamation, dated [_].		

TABLE B2. CAPACITY INTEREST

Participants and Capacity Interest **[Note: Percentages to be completed based on the final financial model and commitments by Participants]**	**Participant**	**Base Facilities Capacity Interest**	**Downstream Facilities Capacity Interest**
	Antelope Valley-East Kern Water Authority (WA)	[INSERT %]	[INSERT %]
	City of American Canyon	[INSERT %]	[INSERT %]
	Coachella Valley Water District (WD)	[INSERT %]	[INSERT %]
	Colusa County	[INSERT %]	[INSERT %]
	Colusa County WD	[INSERT %]	[INSERT %]
	Cortina WD	[INSERT %]	[INSERT %]

	Davis WD	[INSERT %]	[INSERT %]
	Desert WA	[INSERT %]	[INSERT %]
	Dunnigan WD	[INSERT %]	[INSERT %]
	Glenn-Colusa Irrigation District (ID)	[INSERT %]	[INSERT %]
	Irvine Ranch WD	[INSERT %]	[INSERT %]
	LaGrande WD	[INSERT %]	[INSERT %]
	Metropolitan WD of Southern California	[INSERT %]	[INSERT %]
	Reclamation District 108	[INSERT %]	[INSERT %]
	Rosedale-Rio Bravo WD	[INSERT %]	[INSERT %]
	San Bernardino Valley Municipal WD	[INSERT %]	[INSERT %]
	San Gorgonio Pass WA	[INSERT %]	[INSERT %]
	Santa Clara Valley WD	[INSERT %]	[INSERT %]
	Santa Clarita Valley WA	[INSERT %]	[INSERT %]
	Westside WD	[INSERT %]	[INSERT %]
	Wheeler Ridge – Maricopa Water Service District	[INSERT %]	[INSERT %]
	Zone 7 WA	[INSERT %]	[INSERT %]

Subtotal		[INSERT %]	[INSERT %]
State and Federal Capacity Interest	**Party**	**Base Facilities Capacity Interest**	**Fixed Downstream Facilities Capacity Interest**
	State (California Department of Fish and Wildlife)	[INSERT %]	[INSERT %]
	Reclamation	[INSERT %]	[INSERT %]
Subtotal		[INSERT %]	[INSERT %]
Total with Participant Capacity Interest and State and Federal Capacity Interest		100.00%	100.00%
Inactive Storage Pool		Currently estimated at 60 TAF	

SITES PROJECT FACILITIES MAP

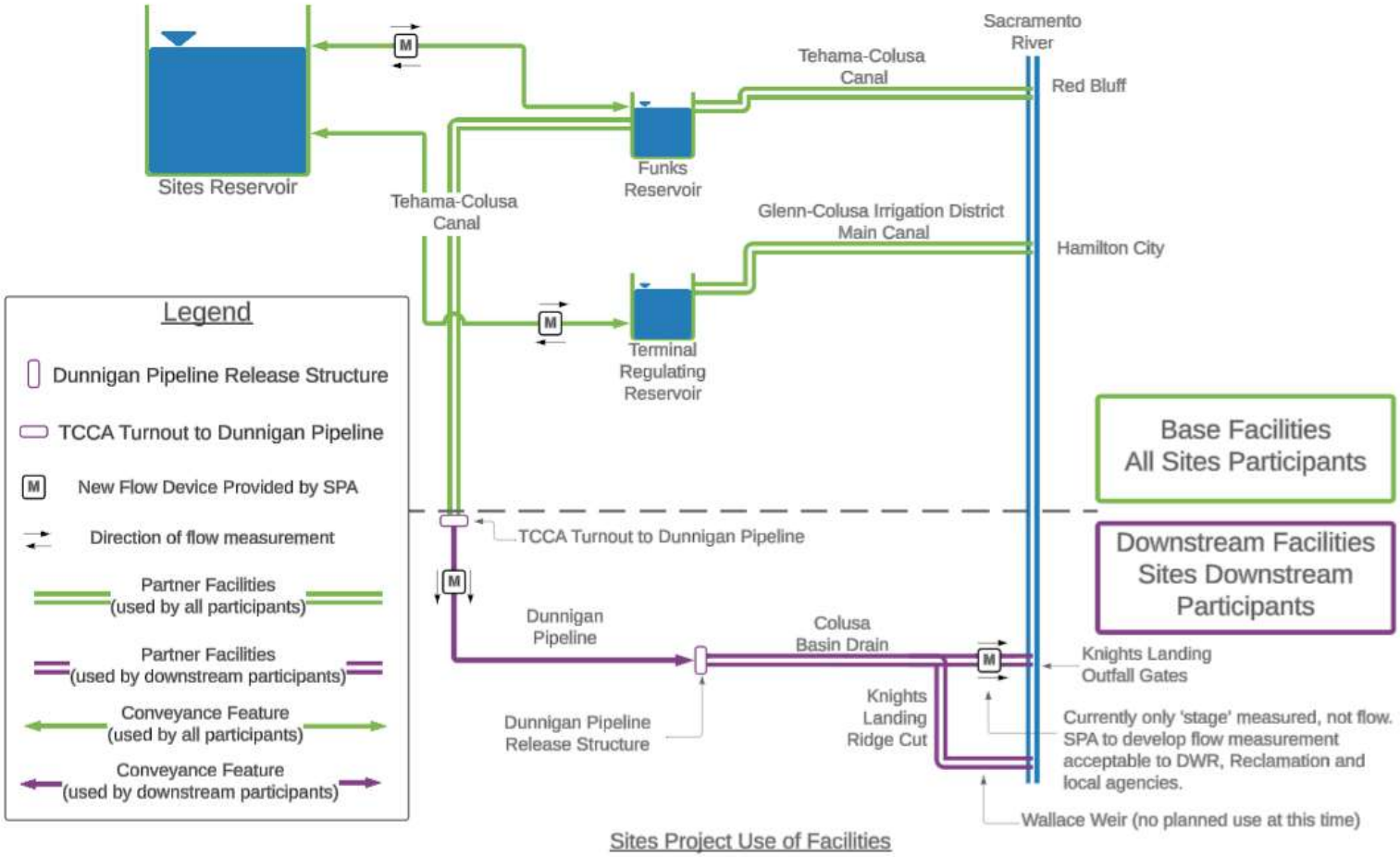

Sites Project Use of Facilities