FINAL ENVIRONMENTAL ASSESSMENT (EA/IS-09-080)

BUENA VISTA WASTER STORAGE DISTRICT
BV8 STATE WATER PROJECT TURNOUT

Appendix D
Protocol-level Biological Surveys

December 2011

State of California

Memorandum

: "Div. Chiefs - IFD, BDD, NED, & WMD
Reg. Mgrs. - Regions 1, 2, 3, 4, & 5

Date : October 17, 1995

From : Department of Fish and Game

Subject :
Staff Report on Burrowing Owl Mitigation

I am hereby transmitting the Staff Report on Burrowing Owl Mitigation for your use in reviewing projects (California Environmental Quality Act [CEQA] and others) which may affect burrowing owl habitat. The Staff Report has been developed during the last several months by the Environmental Services Division (ESD) in cooperation with the Wildlife Management Division (WMD) and regions 1, 2, and 4. It has been sent out for public review and redrafted as appropriate.

Either the mitigation measures in the staff report may be used or project specific measures may be developed. Alterative project specific measures proposed by the Department divisions/regions or by project sponsors will also be considered. However, such mitigation measures must be submitted to ESD for review. The review process will focus on the consistency of the proposed measure with Department, Fish and Game Commission, and legislative policy and with laws regarding raptor species. ESD wiIl coordinate project specific mitigation measure review with WMD.

If you have any questions regarding the report, please contact Mr. Ron Rempel, Supervising Biologist, Environmental Services Division, telephone (916) 654-9980.

COPY Original signed by C.F. Raysbrook

C. F. Raysbrook
Interim Director

Attachment

cc: Mr. Ron Rempel
Department of Fish and Game
Sacramento

STAFF REPORT ON BURROWING OWL MITIGATION

Introduction

The Legislature and the Fish and Game Commission have developed the policies, standards and regulatory mandates to protect native species of fish and wildlife. In order to determine how the Department of Fish and Game (Department) could judge the adequacy of mitigation measures designed to offset impacts to burrowing owls *(Speotyto cunicularia;* A.O.U. 1991) staff (WMD, ESD, and Regions) has prepared this report. To ensure compliance with legislative and commission policy, mitigation requirements which are consistent with this report should be incorporated into: (1) Department comments to Lead Agencies and project sponsors pursuant to the California Environmental Quality Act (CEQA); and (2) other authorizations the Department gives to project proponents for projects impacting burrowing owls.

This report is designed to provide the Department (including regional offices and divisions), CEQA Lead Agencies and project proponents the context in which the Environmental Services Division (ESD) will review proposed project specific mitigation measures. This report also includes preapproved mitigation measures which have been judged to be consistent with policies, standards and legal mandates of the Legislature,. the Fish and Game Commission and the Department's public trust responsibilities. Implementation of mitigation measures consistent with this report are intended to help achieve the conservation of burrowing owls and should compliment multi-species habitat conservation planning efforts currently underway. The *Burrowing Owl Survey Protocol and Mitigation Guidelines* developed by The California Burrowing Owl Consortium (CBOC 1993) were taken into consideration in the preparation of this staff report as were comments from other interested parties.

A range-wide conservation strategy for this species is needed. Any range-wide conservation strategy should establish criteria for avoiding the need to list the species pursuant to either the California or federal Endangered Species Acts through preservation of existing habitat, population expansion into former habitat, recruitment of young into the population, and other specific efforts.

California's burrowing owl population is clearly declining and, if declines continue, the species may qualify for listing. Because of the intense pressure for urban development within suitable burrowing owl nesting and foraging habitat (open, flat and gently rolling grasslands and grass/shrub lands) in California, conflicts between owls and development projects often occur. Owl survival can be adversely affected by disturbance and foraging habitat loss even when impacts to individual birds and nests/burrows are avoided. Adequate information about the presence of owls is often unavailable prior to project approval. Following project approval there is no legal mechanism through which to seek mitigation other than avoidance of occupied burrows or nests. The absence of standardized survey methods often impedes consistent impact assessment.

Burrowing Owl Habitat Description

Burrowing owl habitat can be found in annual and perennial grasslands, deserts, and arid scrublands characterized by low-growing vegetation (Zarn 1974). Suitable owl habitat may also include trees and shrubs if the canopy covers less than 30 percent of the ground surface. Burrows are the essential component of burrowing owl habitat. Both natural and artificial burrows provide protection, shelter, and nests for burrowing owls (Henny and Blus 1981). Burrowing owls typically use burrows made by fossorial mammals, such as ground squirrels or badgers, but also may use man-made structures such as cement culverts; cement, asphalt, or wood debris piles; or openings beneath cement or asphalt pavement.

Occupied Burrowing Owl Habitat

Burrowing owls may use a site for breeding, wintering, foraging, and/or migration stopovers. Occupancy of suitable burrowing owl habitat can be verified at a site by detecting a burrowing owl, its molted feathers, cast pellets, prey remains, eggshell fragments, or excrement at or near a burrow entrance. Burrowing owls exhibit high site fidelity, reusing burrows year after year (Rich 1984, Feeney 1992). A site should be assumed occupied if at least one burrowing owl has been observed occupying a burrow there within the last three years (Rich 1984).

CEQA Project Review

The measures included in this report are intended to provide a decision-making process that should be implemented whenever-there is potential for-an action or project to adversely affect burrowing owls. For projects subject to the California Environmental Quality Act (CEQA), the process begins by conducting surveys to determine if burrowing owls are foraging or nesting on or adjacent to the project site. If surveys confirm that the site is occupied habitat, mitigation measures to minimize impacts to burrowing owls, their burrows and foraging habitat should be incorporated into the CEQA document as enforceable conditions. The measures in this document are intended to conserve the species by protecting and maintaining viable' populations of the species throughout their range in California. This may often result in protecting and managing habitat for the species at sites away from rapidly urbanizing/developing areas. Projects and situations vary and mitigation measures should be adapted to fit specific circumstances.

Projects not subject to CEQA review may have to be handled separately since the legal authority the Department has with respect to burrowing owls in this type of situation is often limited. The burrowing owl is protected from "take" (Section 3503.5 of the Fish and Game Code) but unoccupied habitat is likely to be lost for activities not subject to CEQA.

Legal Status

The burrowing owl is a migratory species protected by international treaty under the Migratory Bird Treaty Act (MBTA) of 1918 (16 U.S.C. 703-711). The MBTA makes it unlawful to take, possess, buy, sell, purchase, or barter any migratory bird listed in 50 C.F.R. Part 10, including feathers or other parts, nests, eggs, or products, except as allowed by implementing regulations (50 C.F.R. 21). Sections 3505, 3503.5, and 3800 of the California Department of Fish and Game Code prohibit the take, possession, or destruction of birds, their nests or eggs. To avoid violation of the take provisions of these laws generally requires that project-related disturbance at active nesting territories be reduced or eliminated during the nesting cycle (February 1 to August 31). Disturbance that causes nest abandonment and/or loss of reproductive effort (e.g., killing or abandonment of eggs or young) may be considered "take"' and is potentially punishable by fines and/or imprisonment.

The burrowing owl is a Species of Special Concern to California because of declines of suitable habitat and both localized and statewide population declines. Guidelines for the Implementation of the California Environmental Quality Act (CEQA) provide that a species be considered as endangered or "rare" regardless of appearance on a formal list for the purposes of the CEQA (Guidelines, Section 15380, subsections b and d). The CEQA requires a mandatory findings of significance if impacts to threatened or endangered species are likely to occur (Sections 21001 (c), 2103; Guidelines 15380, 15064, 15065). To be legally adequate, mitigation measures must be capable of "avoiding the impact altogether by not taking a certain action or parts of an action"; "minimizing impacts by limiting the degree or magnitude of the action and its implementation"; "rectifying the impact by repairing, rehabilitating or restoring the impacted environment"; "or reducing or eliminating the impact over time by preservation and maintenance operations during the life of the action" (Guidelines, Section 15370). Avoidance or mitigation to reduce impacts to less than significant levels must be included in a project or the CEQA lead agency must make and justify findings of overriding considerations.

Impact Assessment

Habitat Assessment

The project site and a 150 meter (approximately 500 ft.) buffer (where possible and appropriate based on habitat) should be surveyed to assess the presence of burrowing owls and their habitat (Thomsen 1971, Martin 1973). If occupied habitat is detected on or adjacent to the site, measures to avoid, minimize, or mitigate the project's impacts to the species should be incorporated into the project, including burrow preconstruction surveys to ensure avoidance of direct take. It is also recommended that preconstruction surveys be conducted if the species was not detected but is likely to occur on the project site.

Burrowing Owl and Burrow Surveys

Burrowing owl and burrow surveys should be conducted during both the wintering and nesting seasons, unless the species is detected on the first survey. If possible, the winter survey should be conducted between December 1 and January 31 (when wintering owls are most likely to be present) and the nesting season survey should be conducted between April 15 and July 15 (the peak of the breeding season). Surveys conducted from two hours before sunset to one hour after, or from one hour before to two hours after sunrise, are also preferable.

Surveys should be conducted by walking suitable habitat on the entire project site and (where possible) in areas within 150 meters (approx. 500 ft.) of the project impact zone. The 150-meter buffer zone is surveyed to identify burrows and owls outside of the project area which may be impacted by factors -such as noise and vibration (heavy equipment, etc.) during project construction. Pedestrian survey transects should be spaced to allow 100 percent visual coverage of the ground surface. The distance between transect center lines should be no more than 30 meters (approx. 100 ft.) and should be reduced to account for differences in terrain, vegetation density, and ground surface visibility. To effectively survey large projects (100 acres or larger), two or more surveyors should be used to walk adjacent transects. To avoid impacts to owls from surveyors, owls and/or occupied burrows should be avoided by a minimum of 50 meters (approx. 160 ft.) wherever practical. Disturbance to occupied burrows should be avoided during all seasons.

Definition of Impacts

The following should be considered impacts to the species:

- Disturbance within 50 meters (approx. 160 ft.) Which may result in harassment of owls at occupied burrows;
- Destruction of natural and artificial burrows (culverts, concrete slabs and debris piles that provide shelter to burrowing owls); and
- Destruction and/or degradation of foraging habitat adjacent (within 100 m) of an occupied burrow(s).

Written Report

A report for the project should be prepared for the Department and copies should be submitted to the Regional contact and to the Wildlife Management Division Bird and Mammal Conservation Program. The report should include the following information:

- Date and time of visit(s) including name of the qualified biologist conducting surveys, weather and visibility conditions, and survey methodology;

- Description of the site including location, size, topography, vegetation communities, and animals observed during visit(s);

- Assessment of habitat suitability for burrowing owls;

- Map and photographs of the site;

- Results of transect surveys including a map showing the location of all burrow(s) (natural or artificial) and owl(s), including the numbers at each burrow if present and tracks, feathers, pellets, or other items (prey remains, animal scat);

- Behavior of owls during the surveys;

- Summary of both winter and nesting season surveys including any productivity information and a map showing territorial boundaries and home ranges; and

- Any historical information (Natural Diversity Database, Department regional files? Breeding Bird Survey data, American Birds records, Audubon Society, local bird club, other biologists, etc.) regarding the presence of burrowing owls on the site.

Mitigation

The objective of these measures is to avoid and minimize impacts to burrowing owls at a project site and preserve habitat that will support viable owls populations. If burrowing owls are detected using the project area, mitigation measures to minimize and offset the potential impacts should be included as enforceable measures during the CEQA process.

Mitigation actions should be carried out from September 1 to January 31 which is prior to the nesting season (Thomsen 1971, Zam 1974). Since the timing of nesting activity may vary with latitude and climatic conditions, this time frame should be adjusted accordingly. Preconstruction surveys of suitable habitat at the project site(s) and buffer zone(s) should be conducted within the 30 days prior to construction to ensure no additional, burrowing owls have established territories since the initial surveys. If ground disturbing activities are delayed or suspended for more than 30 days after the preconstruction survey, the site should be resurveyed.

Although the mitigation measures may be included as enforceable project conditions in the CEQA process, it may also be desirable to formalize them in a Memorandum of Understanding (MOU) between the Department and the project sponsor. An MOU is needed when lands (fee title or conservation easement) are being transferred to the Department.

Specific Mitigation Measures

1. Occupied burrows should not be disturbed during the nesting season (February 1 through August 3 1) unless a qualified biologist approved by the Department verifies through non-invasive methods that either: (1) the birds have not begun egg-laying and incubation; or (2) that juveniles from the occupied burrows are foraging independently and are capable of independent survival.

2. To offset the loss of foraging and burrow habitat on the project site, a minimum of 6.5 acres of foraging habitat (calculated on a 100 m {approx. 300 ft.} foraging radius around the burrow) per pair or unpaired resident bird, should be acquired and permanently protected. The protected lands should be adjacent to occupied burrowing owl habitat and at a location acceptable to the Department. *Protection of additional habitat acreage per pair or unpaired resident bird may be applicable in some instances.* The CBOC has also developed mitigation guidelines (CBOC 1993) that can be incorporated by CEQA lead agencies and which are consistent with this staff report.

3. When destruction of occupied burrows is unavoidable, existing unsuitable burrows should be enhanced (enlarged or cleared of debris) or new burrows created (by installing artificial burrows) at a ratio of 2:1 on the protected lands site. One example of an artificial burrow design is provided in Attachment A.

4. If owls must be moved away from the disturbance area, passive relocation techniques (as described below) should be used rather than trapping. At least one or more weeks will be necessary to accomplish this and allow the owls to acclimate to alternate burrows.

5. The project sponsor should provide funding for long-term management and monitoring of the protected lands. The monitoring plan should include success criteria, remedial measures, and an annual report to the Department.

Impact Avoidance

If avoidance is the preferred method of dealing with potential project impacts, then no disturbance should occur within 50 meters (approx. 160 ft.) of occupied burrows during the nonbreeding season of September 1 through January 31 or within 75 meters (approx. 250 ft.) during the breeding season of February 1 through August 31. Avoidance also requires that a minimum of 6.5 acres of foraging habitat be *permanently* preserved contiguous with occupied burrow sites for each pair of breeding burrowing owls (with or without dependent young) or single unpaired resident bird. The configuration of the protected habitat should be approved by the Department.

Passive Relocation - With One-Way Doors

Owls should be excluded from burrows in the immediate impact zone and within a 50 meter (approx. 160 ft.) buffer zone by installing one-way doors in burrow entrances. One-way doors (e.g., modified dryer vents) should be left in place 48 hours to insure owls have left the burrow before excavation. Two natural or artificial burrows should be provided for each burrow in the project area that will be rendered biologically unsuitable. The project area should be *monitored daily for one* week to confirm owl use of burrows before excavating burrows in the immediate impact zone. Whenever possible, burrows should be excavated using hand tools and refilled to prevent reoccupation. Sections of flexible plastic pipe should be inserted into the tunnels during excavation to maintain an escape route for any animals inside the burrow.

Passive Relocation - Without One-Way Doors

Two natural or artificial burrows should be provided for each burrow in the project area that will be rendered biologically unsuitable. The project area should be *monitored daily until the owls have relocated to the new burrows.* The formerly occupied burrows may then. be excavated. Whenever possible, burrows should be excavated using hand tools and refilled to prevent reoccupation. Sections of flexible plastic pipe should be inserted into burrows during excavation to maintain an escape route for any animals inside the burrow.

Projects Not Subject to CEQA

The Department is often contacted regarding the presence of burrowing owls on construction sites, parking lots and other areas for which there is no CEQA action or for which the CEQA process has been completed. In these situations, the Department should seek to reach agreement with the project sponsor to implement the specific mitigation measures described above. If they are unwilling to do so, passive relocation without the aid of one-way doors is their only option based upon Fish and Game Code 3503.5.

Literature Cited

American Ornithologists Union (AOU). 1991. Thirty-eighth supplement to the AOU checklist of North American birds. *Auk* 108:750-754.

Feeney, L. 1992. Site fidelity in burrowing owls. Unpublished paper presented to Raptor Research Annual Meeting, November 1992. Seattle, Washington.

Haug, E. A. and L. W. Oliphant. 1990, Movements, activity patterns, and habitat use of burrowing owls in Saskatchewan. *J. Wildlife Management* 54:27-35.

Henny, C. J. and L. J. Blus. 1981. Artificial burrows provide new insight into burrowing owl nesting biology. *Raptor Research* 15:82-85.

Martin, D. J. 1973. Selected aspects of burrowing owl ecology and behavior. *Condor* 75:446-456.

Rich, T. 1984. Monitoring burrowing owl populations: Implications of burrow re-use. *Wildlife Society Bulletin* 12:178-180.

The California Burrowing Owl Consortium (CBOC). 1993. Burrowing owl survey protocol and mitigation guidelines. Tech. Rep. Burrowing Owl Consortium, Alviso, California.

Thomsen, L. 1971. Behavior and ecology of burrowing owls on the Oakland Municipal Airport. *Condor* 73:177-192.

Zarn, M. 1974. Burrowing owl. U. S. Department of Interior, Bureau of Land Management. Technical Note T-N 250. Denver, Colorado. 25 pp.

Reproductive Success of Burrowing Owls Using Artificial Nest Burrows in Southeastern Idaho

by Bruce Olenick

Artificial nest burrows were implanted in southeastern Idaho f'or burrowing owls in the spring of 1986. These artificial burrows consisted of a 12" x 12" x 8" wood nesting chamber with rernovable top and a 6 foot corrugated and perforated plastic drainage pipe 6 inches in diameter (Fig. 1). Earlier investigators claimed that artificial burrows must provide a natural dirt floor to allow burrowing owls to modify the nesting tunnel and chamber. Contrary to this, the artificial burrow introduced here does not allow owls to modify the entrance or tunnel. The inability to change the physical dimensions of the burrow tunnel does not seem to reflect the owls' breeding success or deter them from using this burrow design.

In 1936, 22 artificial burrows were inhabited. Thirteen nesting attempts yielded an average clutch size of 8.3 eggs per breeding pair. Eight nests successfully hatched at least 1 nestling. In these nests, *67 of 75* eggs hatched (59.3%) and an estimated 61 nestlings (91.0%) fledged. An analysis of the egg laying and incubation periods showed that incubation commenced well after egg laying bega. Average clutch size at the start of incubation was 5.6 eggs. Most eggs tended to hatch synchronously in all successful nests.

Although the initial cost of constructing this burrow design may be slightly higher than a burrow consisting entirely of wood, the plastic pipe burrow offers the following advantages: (1) it lasts several field seasons without rotting or collapsing; (2) it may prevent or retard predation; (3) construction time is minimal; (4) it is easy to transport, especially over long distances; and (5) the flexible tunnel simplifies installation. The use of this artificial nest burrow design was highly successful and may prove to be a great resource technique for future management of this species.

For additional information on constructing this artificial nest burrow, contact Bruce Olenick, Department of Biology, Idaho State University, Pocatello, ID 83209.

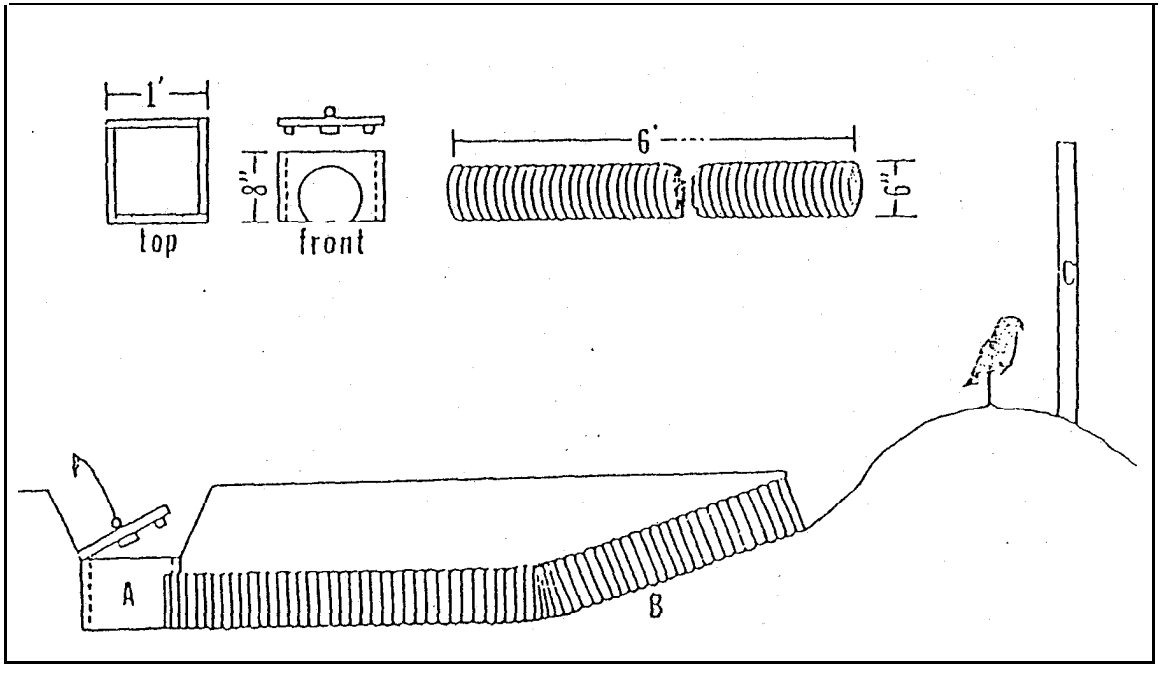

fig. 1 Artificial nest burrow design for burrowing owls Entire unit (including nest chamber) is buried 12" -- 18" below ground for maintaining thermal stability of the nest chamber. A= nest chamber, B = plastic pipe. C = perch.

ATTACHMENT A

U.S. FISH AND WILDLIFE SERVICE STANDARDIZED RECOMMENDATIONS FOR PROTECTION OF THE ENDANGERED SAN JOAQUIN KIT FOX PRIOR TO OR DURING GROUND DISTURBANCE

Prepared by the Sacramento Fish and Wildlife Office
January 2011

INTRODUCTION

The following document includes many of the San Joaquin kit fox (*Vulpes macrotis mutica*) protection measures typically recommended by the U. S. Fish and Wildlife Service (Service), prior to and during ground disturbance activities. **However, incorporating relevant sections of these guidelines into the proposed project is not the only action required under the Endangered Species Act of 1973, as amended (Act) and does not preclude the need for section 7 consultation or a section 10 incidental take permit for the proposed project.** Project applicants should contact the Service in Sacramento to determine the full range of requirements that apply to your project; the address and telephone number are given at the end of this document. Implementation of the measures presented in this document may be necessary to avoid violating the provisions of the Act, including the prohibition against "take" (defined as killing, harming, or harassing a listed species, including actions that damage or destroy its habitat). These protection measures may also be required under the terms of a biological opinion pursuant to section 7 of the Act resulting in incidental take authorization (authorization), or an incidental take permit (permit) pursuant to section 10 of the Act. The specific measures implemented to protect kit fox for any given project shall be determined by the Service based upon the applicant's consultation with the Service.

The purpose of this document is to make information on kit fox protection strategies readily available and to help standardize the methods and definitions currently employed to achieve kit fox protection. The measures outlined in this document are subject to modification or revision at the discretion of the Service.

IS A PERMIT NECESSARY?

Certain acts need a permit from the Service which includes destruction of any known (occupied or unoccupied) or natal/pupping kit fox dens. Determination of the presence or absence of kit foxes and /or their dens should be made during the environmental review process. All surveys and monitoring described in this document must be conducted by a qualified biologist and these activities do not require a permit. A qualified biologist (biologist) means any person who has completed at least four years of university training in wildlife biology or a related science and/or has demonstrated field experience in the identification and life history of the San Joaquin kit fox. In addition, the biologist(s) must be able to identify coyote, red fox,

gray fox, and kit fox tracks, and to have seen a kit fox in the wild, at a zoo, or as a museum mount. Resumes of biologists should be submitted to the Service for review and approval prior to an6y survey or monitoring work occurring.

SMALL PROJECTS

Small projects are considered to be those projects with small foot prints, of approximately one acre or less, such as an individual in-fill oil well, communication tower, or bridge repairs. These projects must stand alone and not be part of, or in any way connected to larger projects (i.e., bridge repair or improvement to serve a future urban development). The Service recommends that on these small projects, the biologist survey the proposed project boundary and a 200-foot area outside of the project footprint to identify habitat features and utilize this information as guidance to situate the project to minimize or avoid impacts. If habitat features cannot be completely avoided, then surveys should be conducted and the Service should be contacted for technical assistance to determine the extent of possible take.

Preconstruction/preactivity surveys shall be conducted no less than 14 days and no more than 30 days prior to the beginning of ground disturbance and/or construction activities or any project activity likely to impact the San Joaquin kit fox. Kit foxes change dens four or five times during the summer months, and change natal dens one or two times per month (Morrell 1972). Surveys should identify kit fox habitat features on the project site and evaluate use by kit fox and, if possible, assess the potential impacts to the kit fox by the proposed activity. The status of all dens should be determined and mapped (see Survey Protocol). Written results of preconstruction/preactivity surveys must be received by the Service within five days after survey completion and prior to the start of ground disturbance and/or construction activities.

If a natal/pupping den is discovered within the project area or within 200-feet of the project boundary, the Service shall be immediately notified and under no circumstances should the den be disturbed or destroyed without prior authorization. If the preconstruction/preactivity survey reveals an active natal pupping or new information, the project applicant should contact the Service immediately to obtain the necessary take authorization/permit.

If the take authorization/permit has already been issued, then the biologist may proceed with den destruction within the project boundary, except natal/pupping den which may not be destroyed while occupied. A take authorization/permit is required to destroy these dens even after they are vacated. Protective exclusion zones can be placed around all known and potential dens which occur outside the project footprint (conversely, the project boundary can be demarcated, see den destruction section).

OTHER PROJECTS

It is likely that all other projects occurring within kit fox habitat will require a take authorization/permit from the Service. This determination would be made by the Service during the early evaluation process (see Survey Protocol). These other projects would include, but are not limited to: Linear projects; projects with large footprints such as urban development; and projects which in themselves may be small but have far reaching impacts (i.e., water storage or conveyance facilities that promote urban growth or agriculture, etc.).

The take authorization/permit issued by the Service may incorporate some or all of the protection measures presented in this document. The take authorization/permit may include measures specific to the needs of the project and those requirements supersede any requirements found in this document.

EXCLUSION ZONES

In order to avoid impacts, construction activities must avoid their dens. The configuration of exclusion zones around the kit fox dens should have a radius measured outward from the entrance or cluster of entrances due to the length of dens underground. The following distances are **minimums**, and if they cannot be followed the Service must be contacted. Adult and pup kit foxes are known to sometimes rest and play near the den entrance in the afternoon, but most above-ground activities begin near sunset and continue sporadically throughout the night. Den definitions are attached as Exhibit A.

Potential den**	50 feet
Atypical den**	50 feet
Known den*	100 feet
Natal/pupping den (occupied and unoccupied)	Service must be contacted

*Known den: To ensure protection, the exclusion zone should be demarcated by fencing that encircles each den at the appropriate distance and does not prevent access to the den by kit foxes. Acceptable fencing includes untreated wood particle-board, silt fencing, orange construction fencing or other fencing as approved by the Service as long as it has openings for kit fox ingress/egress and keeps humans and equipment out. Exclusion zone fencing should be maintained until all construction related or operational disturbances have been terminated. At that time, all fencing shall be removed to avoid attracting subsequent attention to the dens.

**Potential and Atypical dens: Placement of 4-5 flagged stakes 50 feet from the den entrance(s) will suffice to identify the den location; fencing will not be required, but the exclusion zone must be observed.

Only essential vehicle operation on existing roads and foot traffic should be permitted. Otherwise, all construction, vehicle operation, material storage, or any other type of surface-disturbing activity should be prohibited or greatly restricted within the exclusion zones.

DESTRUCTION OF DENS

Limited destruction of kit fox dens may be allowed, if avoidance is not a reasonable alternative, provided the following procedures are observed. The value to kit foxes of potential, known, and natal/pupping dens differ and therefore, each den type needs a different level of protection. **Destruction of any known or natal/pupping kit fox den requires take authorization/permit from the Service**.

Destruction of the den should be accomplished by careful excavation until it is certain that no kit foxes are inside. The den should be fully excavated, filled with dirt and compacted to ensure that kit foxes cannot reenter or use the den during the construction period. If at any point during excavation, a kit fox is discovered inside the den, the excavation activity shall cease immediately and monitoring of the den as described above should be resumed. Destruction of the den may be completed when in the judgment of the biologist, the animal has escaped, without further disturbance, from the partially destroyed den.

Natal/pupping dens: Natal or pupping dens which are occupied will not be destroyed until the pups and adults have vacated and then only after consultation with the Service. Therefore, project activities at some den sites may have to be postponed.

Known Dens: Known dens occurring within the footprint of the activity must be monitored for three days with tracking medium or an infra-red beam camera to determine the current use. If no kit fox activity is observed during this period, the den should be destroyed immediately to preclude subsequent use.

If kit fox activity is observed at the den during this period, the den should be monitored for at least five consecutive days from the time of the observation to allow any resident animal to move to another den during its normal activity. Use of the den can be discouraged during this period by partially plugging its entrances(s) with soil in such a manner that any resident animal can escape easily. Only when the den is determined to be unoccupied may the den be excavated under the direction of the biologist. If the animal is still present after five or more consecutive days of plugging and monitoring, the den may have to be excavated when, in the judgment of a biologist, it is temporarily vacant, for example during the animal's normal foraging activities. **The Service encourages hand excavation, but realizes that soil conditions may necessitate the use of excavating equipment. However, extreme caution must be exercised.**

Potential Dens: If a take authorization/permit has been obtained from the Service, den destruction may proceed without monitoring, unless other restrictions were issued with the take authorization/permit. If no take authorization/permit has been issued, then potential dens should be monitored as if they were known dens. If any den was considered to be a potential den, but is later determined during monitoring or destruction to be currently, or previously used by kit fox (e.g., if kit fox sign is found inside), then all construction activities shall cease and the Service shall be notified immediately.

CONSTRUCTION AND ON-GOING OPERATIONAL REQUIREMENTS

Habitat subject to permanent and temporary construction disturbances and other types of ongoing project-related disturbance activities should be minimized by adhering to the following activities. Project designs should limit or cluster permanent project features to the smallest area possible while still permitting achievement of project goals. To minimize temporary disturbances, all project-related vehicle traffic should be restricted to established roads, construction areas, and other designated areas. These areas should also be included in preconstruction surveys and, to the extent possible, should be established in locations disturbed by previous activities to prevent further impacts.

1. Project-related vehicles should observe a daytime speed limit of 20-mph throughout the site in all project areas, except on county roads and State and Federal highways; this is particularly important at night when kit foxes are most active. Night-time construction should be minimized to the extent possible. However if it does occur, then the speed limit should be reduced to 10-mph. Off-road traffic outside of designated project areas should be prohibited.

2. To prevent inadvertent entrapment of kit foxes or other animals during the construction phase of a project, all excavated, steep-walled holes or trenches more than 2-feet deep should be covered at the close of each working day by plywood or similar materials. If the trenches cannot be closed, one or more escape ramps constructed of earthen-fill or wooden planks shall be installed. Before such holes or trenches are filled, they should be thoroughly inspected for trapped animals. If at any time a trapped or injured kit fox is discovered, the Service and the California Department of Fish and Game (CDFG) shall be contacted as noted under measure 13 referenced below.

3. Kit foxes are attracted to den-like structures such as pipes and may enter stored pipes and become trapped or injured. All construction pipes, culverts, or similar structures with a diameter of 4-inches or greater that are stored at a construction site for one or more overnight periods should be thoroughly inspected for kit foxes before the pipe is subsequently buried, capped, or otherwise used or moved in any way. If a kit fox is discovered inside a pipe, that section of pipe should not be moved until the Service has been consulted. If necessary, and under the direct supervision of the biologist, the pipe

may be moved only once to remove it from the path of construction activity, until the fox has escaped.

4. All food-related trash items such as wrappers, cans, bottles, and food scraps should be disposed of in securely closed containers and removed at least once a week from a construction or project site.

5. No firearms shall be allowed on the project site.

6. No pets, such as dogs or cats, should be permitted on the project site to prevent harassment, mortality of kit foxes, or destruction of dens.

7. Use of rodenticides and herbicides in project areas should be restricted. This is necessary to prevent primary or secondary poisoning of kit foxes and the depletion of prey populations on which they depend. All uses of such compounds should observe label and other restrictions mandated by the U.S. Environmental Protection Agency, California Department of Food and Agriculture, and other State and Federal legislation, as well as additional project-related restrictions deemed necessary by the Service. If rodent control must be conducted, zinc phosphide should be used because of a proven lower risk to kit fox.

8. A representative shall be appointed by the project proponent who will be the contact source for any employee or contractor who might inadvertently kill or injure a kit fox or who finds a dead, injured or entrapped kit fox. The representative will be identified during the employee education program and their name and telephone number shall be provided to the Service.

9. An employee education program should be conducted for any project that has anticipated impacts to kit fox or other endangered species. The program should consist of a brief presentation by persons knowledgeable in kit fox biology and legislative protection to explain endangered species concerns to contractors, their employees, and military and/or agency personnel involved in the project. The program should include the following: A description of the San Joaquin kit fox and its habitat needs; a report of the occurrence of kit fox in the project area; an explanation of the status of the species and its protection under the Endangered Species Act; and a list of measures being taken to reduce impacts to the species during project construction and implementation. A fact sheet conveying this information should be prepared for distribution to the previously referenced people and anyone else who may enter the project site.

10. Upon completion of the project, all areas subject to temporary ground disturbances, including storage and staging areas, temporary roads, pipeline corridors, etc. should be re-contoured if necessary, and revegetated to promote restoration of the area to pre-project conditions. An area subject to "temporary" disturbance means any area that is

disturbed during the project, but after project completion will not be subject to further disturbance and has the potential to be revegetated. Appropriate methods and plant species used to revegetate such areas should be determined on a site-specific basis in consultation with the Service, California Department of Fish and Game (CDFG), and revegetation experts.

11. In the case of trapped animals, escape ramps or structures should be installed immediately to allow the animal(s) to escape, or the Service should be contacted for guidance.

12. Any contractor, employee, or military or agency personnel who are responsible for inadvertently killing or injuring a San Joaquin kit fox shall immediately report the incident to their representative. This representative shall contact the CDFG immediately in the case of a dead, injured or entrapped kit fox. The CDFG contact for immediate assistance is State Dispatch at (916)445-0045. They will contact the local warden or Mr. Paul Hoffman, the wildlife biologist, at (530)934-9309. The Service should be contacted at the numbers below.

13. The Sacramento Fish and Wildlife Office and CDFG shall be notified in writing within three working days of the accidental death or injury to a San Joaquin kit fox during project related activities. Notification must include the date, time, and location of the incident or of the finding of a dead or injured animal and any other pertinent information. The Service contact is the Chief of the Division of Endangered Species, at the addresses and telephone numbers below. The CDFG contact is Mr. Paul Hoffman at 1701 Nimbus Road, Suite A, Rancho Cordova, California 95670, (530) 934-9309.

14. New sightings of kit fox shall be reported to the California Natural Diversity Database (CNDDB). A copy of the reporting form and a topographic map clearly marked with the location of where the kit fox was observed should also be provided to the Service at the address below.

Any project-related information required by the Service or questions concerning the above conditions or their implementation may be directed in writing to the U.S. Fish and Wildlife Service at:

Endangered Species Division
2800 Cottage Way, Suite W2605
Sacramento, California 95825-1846
(916) 414-6620 or (916) 414-6600

EXHIBIT "A" - DEFINITIONS

"Take" - Section 9 of the Endangered Species Act of 1973, as amended (Act) prohibits the "take" of any federally listed endangered species by any person (an individual, corporation, partnership, trust, association, etc.) subject to the jurisdiction of the United States. As defined in the Act, take means " . . . to harass, harm, pursue, hunt, shoot, wound, kill, trap, capture, or collect, or attempt to engage in any such conduct". Thus, not only is a listed animal protected from activities such as hunting, but also from actions that damage or destroy its habitat.

"Dens" - San Joaquin kit fox dens may be located in areas of low, moderate, or steep topography. Den characteristics are listed below, however, the specific characteristics of individual dens may vary and occupied dens may lack some or all of these features. Therefore, caution must be exercised in determining the status of any den. Typical dens may include the following: (1) one or more entrances that are approximately 5 to 8 inches in diameter; (2) dirt berms adjacent to the entrances; (3) kit fox tracks, scat, or prey remains in the vicinity of the den; (4) matted vegetation adjacent to the den entrances; and (5) manmade features such as culverts, pipes, and canal banks.

"Known den" - Any existing natural den or manmade structure that <u>is used or has been used at any time in the past</u> by a San Joaquin kit fox. Evidence of use may include historical records, past or current radiotelemetry or spotlighting data, kit fox sign such as tracks, scat, and/or prey remains, or other reasonable proof that a given den is being or has been used by a kit fox. The Service discourages use of the terms "active" and "inactive" when referring to any kit fox den because a great percentage of occupied dens show no evidence of use, and because kit foxes change dens often, with the result that the status of a given den may change frequently and abruptly.

"Potential Den" - Any subterranean hole within the species' range that has entrances of appropriate dimensions for which available evidence is insufficient to conclude that it is being used or has been used by a kit fox. Potential dens shall include the following: (1) any suitable subterranean hole; or (2) any den or burrow of another species (e.g., coyote, badger, red fox, or ground squirrel) that otherwise has appropriate characteristics for kit fox use.

"Natal or Pupping Den" - Any den used by kit foxes to whelp and/or rear their pups. Natal/pupping dens may be larger with more numerous entrances than dens occupied exclusively by adults. These dens typically have more kit fox tracks, scat, and prey remains in the vicinity of the den, and may have a broader apron of matted dirt and/or vegetation at one or more entrances. A natal den, defined as a den in which kit fox pups are actually whelped but not necessarily reared, is a more restrictive version of the pupping den. In practice, however, it is difficult to distinguish between the two, therefore, for purposes of this definition either term applies.

"Atypical Den" - Any manmade structure which has been or is being occupied by a San Joaquin kit fox. Atypical dens may include pipes, culverts, and diggings beneath concrete slabs and buildings.

FIELD PROTOCOLS FOR KANGAROO RATS
THURSDAY, MARCH 22, 2007

This information is provided as a starting point for biologists writing proposals for survey and research work for the listed kangaroo rats[1] in the jurisdiction of the Sacramento Fish and Wildlife Office (SFWO). Please note that each site-specific work plan will be independently evaluated according to the balance of the risks and benefits as to whether they can reasonably be expected to promote the recovery of the species in question, including proposed work plans submitted as part of a recovery permit application. As such, proposals for work need to provide a specific context of research objectives, defined with adequate specificity to enable a determination by the SFWO of whether the work would: jeopardize the species; minimize the impacts of the work on the individuals, populations, and the species; and would be reasonably expected to promote the recovery of the species.

One implication of this information sheet is that deviations from any particular aspect of the methodologies described should be accompanied by an explanation of why the variance would reasonably be expected to increase the benefits of the work, or reduce the risks, and by how much. Such explanations should include information from any literature or unpublished information that provides field-tested conclusions in support of your argument, whenever such material is available. This can include information from work with similar species— the greater the similarity to the species, locations, and work proposed, the better the support it would provide that the improved results of the methodology would be expected to apply to the proposed work.

The more unique your proposed work plan is, the more lead time you should allow for evaluation by the Fish and Wildlife Service (Service) (and the California Department of Fish and Game [CDFG or DFG]). It may be important to timely review to coordinate with the agency offices involved to be sure that everyone who needs to participate in the review and approval of your work plan has received copies of the plan.

Please note that these protocols are not intended to provide a basis for concluding that the species is absent from a site. The Service has reason to believe that the trapping portion of a survey may not reliably indicate absence for species that are cryptic, vagile, and elusive. Cryptic species are those for which aspects of their morphology, coloration, size, timing of main activity periods, preferred habitat or other reasons make them difficult to observe. Vagile species are capable of more or less rapid movement. Elusive species are those whose behavior leads them to avoid observation. In combination, these traits result in there being no reasonable and feasible method that will reliably determine the species is absent from and does not use a particular site at any time of year or during any climatic cycles such as years with particularly warm, cold, damp, or dry weather, particularly when they may only be present in very low numbers, as is the case for many threatened or endangered species.

---

[1] endangered giant kangaroo rat (*Dipodomys ingens*), endangered Fresno kangaroo rat (*Dipodomys nitratoides exilis*), and endangered Tipton kangaroo rat (*Dipodomys nitratoides nitratoides*)

CALIFORNIA DEPARTMENT OF FISH AND GAME
REGION 4
APPROVED SURVEY METHODOLOGIES FOR SENSITIVE SPECIES

TIPTON KANGAROO RAT, *Dipodomys nitratoides nitratoides* Status: CE, FE[2]

Methods

Live-trapping is the primary method for reliable Tipton kangaroo rat (TKR) identification (Williams, pers. com.), but in many instances it may be possible to determine the probable presence of TKR on a site based on a variety of factors. Preliminary surveys to determine the probable presence of TKR should be based on range, presence of habitat, burrow characteristics, scat size, track measurements, and .skeletal remains found in owl pellets. The locations of suitable habitat, potential burrows, and other sign should be reported to DFG and USFWS to determine if trapping will be necessary. Please note; these criteria can only be used for the determination of presence. The Department will not accept the use of these criteria to determine that the site is unoccupied by TKR.

Live-traps should be placed close to burrow entrances, along runways, and near rodent sign to increase trapping success. Flagging should be located at each trap or trap cluster with the number of traps at that location noted an the flagging to assure that all traps are checked. Traps should be baited with rolled oats, oatmeal, peanut butter, or other appropriate bait. Traps should be monitored for four consecutive nights or until presence is confirmed. A minimum of 100 traps per 160 acres should be used.

Timing

TKR are active year around, but optimum activity periods occur from April 1 to June 30. If trapping studies are required by the agencies, the traps should be opened at sunset and checked and closed for the night after approximately four hours. Insulating materials may be placed in traps, but must be changed each time an animal is trapped. Species experts recommend using tightly wadded paper towels as insulating material. Dacron or similar materials should not be used in the traps.

[2] CDFG, R4. c.1990. Approved Survey Methodologies For Sensitive Species, Tipton Kangaroo Rat, Dipodomys nitratoides nitratoides, Status: CE, FE. CDFG, R4, Fresno, California. 1p.

CALIF0RNIA DEPARTMENT OF FISH AND GAME
REGION 4
APPROVED SURVEY METHODOLOGIES FOR SENSITIVE SPECIES

GIANT KANGAROO RAT, *Dipodomys ingens* Status: CE, FE[3]

Methods

Surveys for giant kangaroo rats (GKR) should focus on the identification of their characteristic habitat types and burrow systems (50-55 mm in diameter). GKR inhabit individual territories (known as precincts) averaging 6 meters (20 feet) in diameter where a shallow burrow system is constructed. GKR are found in colonies consisting of two to thousands of precincts.

Daytime line transect surveys for burrow systems should be conducted by walking the property at 10–30 meter (30 to 100-foot) intervals to provide systematic coverage of the entire project area. Transect width should be adjusted based on vegetation height, topography, etc., to facilitate the detection of precincts and other sign. All known or potential GKR-precincts should be accurately mapped. Photographs of the precincts should be taken, and information on topography, vegetation, land use, etc., recorded. Scat should be collected for later confirmation of species by known experts.

Since Heermann's kangaroo rats, *Dipodomys heermanni*, are also known to construct haystacks, the presence of haystacks should not be used as a presumptive diagnostic characteristic to confirm presence of GKR. In some instances, confirmation of species' presence may require trapping. Trapping should not be undertaken without prior consultation with the Department's Region 4 Threatened and Endangered Species Coordinator.

Timing

GKR ake active year-around.

Species Expert

Dan Williams
CSU Stanislaus
Department of Biological Sciences
Turlock, CA 95380
(209) 667-3476 or (209) 667-3485

[3] CDFG, R4. c.1990. Approved Survey Methodologies For Sensitive Species, GIANT KANGAROO RAT, Dipodomys ingens, Status: CE, FE. CDFG, R4, Fresno, California. 1p.

Proposed Methodology for a Recovery Permit Application for Fresno Kangaroo Rat Surveys
[Note: Adapted by minor edits for clarity; some information may not be current.]

Mr. David M. Laabs, M.A.
BIOSEARCH WILDLIFE SURVEYS
PO Box 8043
Santa Cruz. CA 95061-8043
(408) 458-9349

U.S. Fish and Wildlife Service
Federal Wildlife Permit Office
1401 North Fairfax Dr. Room 432
Arlington, VA 22203

July 28, 1992

This letter is an attachment for a Federal fish and wildlife permit application (Form 3-200) to conduct studies of an endangered species. As required in Sections 13.12 (b) and 17.22 (a) of Title 50 of the Code of Federal Regulations, I am providing additional details concerning the need for this permit, and the activities to be conducted under this permit.

Background

The Fresno kangaroo rat (*Dipodornys nitratoides exilis*) is one of three recognized sub-species of the San Joaquin kangaroo rat. It is listed as Endangered by the United States Fish and Wildlife Service (USFWS) and the California Department of Fish and Game (CDFG). The preferred habitat of the Fresno kangaroo rat consists of alkali sink and open grassland communities on the floor of the San Joaquin Valley in the vicinity of Fresno, California. Conversion of native habitat to more intensive agriculture and urban uses is the primary reason for the decline of this sub-species.

Biosearch Wildlife Surveys is negotiating with the Habitat Restoration Group (Scotts Valley, CA) to conduct field studies at a 100 acre site near the intersection of Hwy. 41 and Ave. 10, four miles north of Fresno, Madera County, CA. The Valley Children's Hospital proposes to use the site to expand its facilities. The proposed scope of work is attached. Consultation with Dr. Dan Williams of California State University at Stanislaus, a recognized species expert, has indicated that the sub-species could inhabit the site. The project site contains fallow agricultural fields adjacent to native habitat, and there is evidence that the species will re-colonize agricultural fields which have been allowed to go fallow (Williams, pers. comm.). Live-trapping is the only reliable way to determine the presence of the Fresno kangaroo rat, since burrow dimensions of the sympatric Heerman's kangaroo rat (Dipodornys heermani) overlap considerably with those of the Fresno kangaroo rat.

Live-trapping constitutes a "take" of an endangered species (as defined in 50 CFR 10.12 and section 9 of the Endangered Species Act), and is prohibited (50 CFR 17.21). However, permits to take endangered wildlife for scientific purposes may be applied for through the USFWS (50

CFR 17.22). I am applying for a permit to live-trap the Fresno kangaroo rat to determine its presence and relative abundance at the site of the proposed development detailed above.

Data on distribution, relative density, and population trends are critical to the management and continued existence of the Fresno kangaroo rat. Collection of such data can reasonably be expected to promote the recovery of the species.

Notes on Survey Methods for the San Joaquin Valley Kangaroo Rat, *Dipodomys nitratoides*

There is no standardized survey methodology to determine the presence of the Fresno kangaroo rat (B. Lehman, USFWS-SFWO. pers. comm.). Therefore, methodology will follow those developed by Region 4 of the California Department of Fish and Game (CDFG) to survey for the closely related Tipton kangaroo rat (*D. n. nitratoides*) (TKR). Preliminary surveys will be conducted on the study site to locate potential burrow clusters. Transects spaced every thirty feet will be walked to provide 100% coverage of the study site. All kangaroo rat burrows will be identified and mapped. One hundred (100) Sherman live-traps (Model XLKR; 13" x 3.5" x 3") will be placed close to active burrow entrances and along runways, as the TKR methodology specifies for each separate survey of up to 160 acres. Traps will be baited with a mixture of rolled oats, bird seed, and peanut butter; provided with cotton nesting material; and opened at dusk. Traps will be checked and closed after four hours and operated for four consecutive nights.

All animals trapped will be identified to species, measured, weighed, aged, and sexed. Preformatted survey forms will be used to collect data. In order to estimate relative abundance, we propose to collect mark-recapture data. The first two nights will represent the marking phase of the study. All animals will be marked with non-toxic permanent markers behind the ear(s). We have found this to be a reliable method to recognize individuals which have been previously trapped. The animals cannot reach the spot to wash it off, but it will wear off after about a week. The second two day period will represent the recapture phase of the study. The Petersen-Lincoln estimator will then be used to calculate population size.

All Fresno kangaroo rats will be immediately released at the location they were trapped following data collection. No animals will be removed from the wild. If accidental mortality occurs, USFWS will be immediately notified and the specimen will be donated to the collection at the Museum of Vertebrate Zoology at the University of California at Berkeley. We do not anticipate such an event, and feel the methodology proposed would have no detrimental effects on the population in question should they be present or the subspecies as a whole.

All field work will be carried out by individuals authorized on our permit. They will be assisted by wildlife biologists who have been given instructions about their role and the need to remain under immediate supervision. Resumes of all biologists are attached.

Study Schedule

All field work will be conducted in the summer and fall.

Report Procedures

As required by 50 CFR 13.45, a report will be filed with USFWS no later than March 31, 1993, or as otherwise specified in the terms and conditions of our permit. This report will include study methodology, results, analysis, and discussion of data, and maps showing location of trapping effort.

Sincerely,
David M. Laabs, M.A.

SPECIAL TERMS AND CONDITIONS FOR
FEDERAL TAKE PERMIT NUMBER 768251[4]

1. The location of permitted activities is restricted to the following geographical areas:

   a. All areas within the proposed 100-acre Valley Children's Hospital project area, Madera County, California and adjacent habitats within one quarter (1/4) mile. Location is 4 miles north of Fresno near the intersection of Highway 41 and Avenue 10.

   b. Proposals to trap Fresno kangaroo rats at other specific locations shall be submitted in writing to the U.S. Fish and Wildlife Service (Service), Sacramento Field Office, 2800 Cottage Way, Room E-1803, Sacramento, California 95825-1846 with a copy to Doug Srnithey of the Service's Portland Regional Office, 911 NE 11th Avenue, Portland, Oregon 97232-4181. The permittee may not commence activities in a new area until written authorization is received from the Service's Enhancement Field Station.

   If the permittee is denied authorization to conduct activities at other locations requested, the permittee may submit a request for reconsideration to the Regional Director in the Portland Regional Office, as provided in 50 CFR 13.29. The procedures specified in 50 CFR 13.29(b) must be followed.

2. Capture and handling of Fresno kangaroo rats pursuant to this permit shall be conducted by or under the direct field supervision of Mr. David M. Laabs or Mr. Mark L. Allaback.

3. Number of Fresno kangaroo rats allowed to be accidentally injured or killed during trapping and handling is one (1) of each subspecies. Any such accidental injury or killing of a Fresno kangaroo rat shall be reported within three working days to the Service's Sacramento Field Office and Portland Regional Office and to the California Department of Fish and Game. Permittee must also report such injuries and deaths in the annual report.

[4] These terms and conditions were written around 1992, and do not reflect all aspects of changes made to kangaroo permit terms and conditions since that time to reflect new information about the species and methods.

4. Depositories designated to receive preserved specimens are the Los Angeles County Museum; the University of California, Davis; San Francisco State University; or the University of California, Berkeley Museum of Vertebrate Zoology.

5. Taking of Fresno kangaroo rats:

   a. This permit authorizes the live capture of individual Fresno kangaroo rats subject to the terms of parts 1 and 2 above. Except as permitted under 5 (e) below, all individuals captured may be examined for species identification, sexed, weighed, aged, and then shall be released immediately at the capture site.

   b. Fresno kangaroo rats captured may be marked using a non-toxic felt-tipped pen for recapture identification.

   c. Only Sherman live traps at least 12 inches in length or with sufficient modification to eliminate or substantially reduce the risk of tail injury shall be used to capture Fresno kangaroo rats.

   d. Investigators shall undertake all necessary precautions, including placement of insulating materials over and/or inside traps and timely checking of traps, to minimize risk of exposure to captured animals.

   e. The permittee is authorized to salvage all Fresno kangaroo rats found dead during live-trapping inventories. Dead animals shall be preserved via freezing. All specimens shall be clearly labeled.

   f. Trapping efforts and methodologies shall be coordinated with the California Department of Fish and Game to increase the potential for trapping success and to minimize the potential for inadvertent harm or mortality to individual animals. The Department contact is the Scientific Collecting Permits section, Habitat Conservation Planning Branch; 1416 Ninth Street, 12th Floor, Suite 1260; Sacramento, CA 95814-5510.

6. The designated field station to receive a copy of the annual report is the U.S. Fish and Wildlife Service, Sacramento Field Office, 2800 Cottage Way, Room W-2605, Sacramento, California 95825-1888. The Service contact is the Recovery Permit Coordinator, Mr. Larry Host (916-414-6672), as of March 21, 2007. Reports shall include copies of all CNDDB occurrence record forms for all listed species observed. [Please note that the legal requirement for submitting reports pursuant to the terms and conditions of your permit is separate from any requirements for submitting information for consultation (such as on behalf of a client) for consultation under section 7 or 10(a)(1)(B) or for contract work reporting requirements for work funded by the Service. Please check with SFWO's San Joaquin Valley Branch or your contract administrator to find out if a copy of your permit report will be satisfactory for those purposes.]

Notes on Marking Kangaroo Rats[5] Tuesday, March 20, 2007

Under a recovery permit for several federally listed species, including the Morro Bay kangaroo rat and giant kangaroo rat, the permittee's existing permit authorizes her to mark kangaroo rats using monel ear tags. Ms. Cooper has applied to change the marking method to clipping the terminal hairs with blunt scissors in an area less than 2.54 cm wide on the posterior dorsal region in order to reveal the darker fur on the individual.

We have spoken with Ms. Cooper, and she states the area would be square, and she could actually work with clipping an area less than 2 x 2 cm square. She said other researchers are now using this method, including a study on Forest Service land. The size of the square would be adjusted downward according to the size of the kangaroo rat: in other words, smaller individuals would have smaller clipped areas.

The proposed marking method is a less-invasive technique than the authorized ear-tagging appropriate to longer studies, and will persist longer than non-toxic marking felt tipped pen, which is only suitable for very brief studies or surveys. We find that amending the recovery permit to change the marking method will not jeopardize the Morro Bay kangaroo rat or giant kangaroo rat. We recommend that Lauronda Cooper's recovery permit be amended to include clipping the terminal hairs as the marking method, with the clipped area being less than 2 x 2 cm square.

***

Dan, Linda, and Jenness,[6]

We have reviewed the request for an amendment to the permit, TE-106759, by Lauronda Cooper, to add an alternative method of marking kangaroo rats, including the Tipton's and Giant Kangaroo Rats. She has proposed that when individual identification is not necessary for recaptures, that a patch of terminal or guard hairs (the outer layer of fur, not involved in thermoregulation) be clipped by the use of blunt-tipped scissors from the posterior dorsal area instead of using monel ear tags. We agree with the biologists from Ventura who find that this alternative method will be likely to be less invasive for Stephen's, Morro Bay, and Giant Kangaroo Rats, and will further reduce the effects of capture on individuals, the populations, and the species in question relative to other marking methods. Ms. Cooper has indicated that a patch 2 X 2 cm will be adequate, the biologists at Ventura concurred with this amount of clipping, and our biologists also agree that will be appropriate. We request that a term be added to the permit limiting the size of the clipped patch to that amount and depth. We also request that a term also be added to the reporting requirements to include whether any observations were made each year that would indicate that this marking method is causing substantially greater or reduced injury and mortality, during and subsequent to marking, than ear-tagging or other methods. We would like this term to also include indications of the amount of supervised experience needed to train biologists to carry out the clipping safely, effectively, and to the specified depth on a consistent

[5] Adapted from a memorandum by the Ventura Fish and Wildlife Office on 8/3/2006.
[6] Adapted from a memorandum by the Sacramento Fish and Wildlife Office on 1/18/2007.

basis, should such training by Ms. Cooper take place. Should it be possible to do without affecting the safety of the procedure, we would like to get photographs (taken without flash unless the eyes are protected) that demonstrates the details of handling and clipping.

With the above provisions, we find that adding this alternative marking method will not be likely to jeopardize the TKR and GKR during work in our area, and recommend that the permit be amended as requested for those species in our area. We defer to the Ventura office for work in their area.