CATEGORICAL EXCLUSION CHECKLIST
2010 Water Conservation Field Services Grant
Fresno Irrigation District
American Colony and Fresno Colony Headworks Projects

South-Central California Area Office May 12, 2010

Purpose and Need for Action: Fresno Irrigation District (FID) comprises some 245,000 acres, lies entirely within Fresno County and includes the rapidly growing Fresno-Clovis metropolitan area. FID now operates approximately 800 miles of canals and pipelines with only a few ditchtenders on duty at any one time. Remote monitoring of flow within canals has become an important factor for FID to effectively operate and manage their facilities. FID has already installed flow control gates in some of their facilities. In 2006, Reclamation awarded FID a Water Conservation Field Services Program (WCFSP) Grant for the purchase and installation of a Langemann-style canal gate and telemetry equipment for their Thompson Canal (CEC-06-36). In 2009, Reclamation awarded FID another WCFSP Grant for the installation of a new flow control gate at the bifurcation point of Washington Colony and Oleander Canals (CEC-09-49).

In 2010, FID has applied for a WCFSP Grant for their *American Colony and Fresno Colony Headworks Project* (Project) which includes the installation of a flowmeter in the American Colony Canal and modification of an existing Replogle Flume in the Fresno Colony Canal as well as the installation of telemetry equipment at both canals (see Figure 1).

The purpose of the Proposed Action is to improve regulation and increase operational efficiency by controlling and accurately measuring water that enters the American Colony and Fresno Colony canals.

Proposed Action: Reclamation proposes to award a 2010 WCFSP Grant to FID for their Project which would include:

- Installation of a new flowmeter in the American Colony Canal. The flowmeter would be placed within the existing concrete pipeline using anchor bolts (see Figure 2).

- Installation of Systematic Control and Data Acquisition (SCADA) telemetry equipment within a new SCADA enclosure next to the existing check structures at the American Colony Canal and Fresno Colony Canal. The new 3-foot by 3-foot by 18-inch enclosure would be mounted to a 4 inch metal pole that would be embedded 30 inches into the ground. Location of the poles would be within the canal banks approximately 5 feet from their Headgates.

- A 1.5 inch polyvinyl chloride conduit would be installed underground and run from the SCADA enclosure to the existing and new flowmeters. Trenching for the conduit would be 18 inches deep and 6 inches wide and approximately 4 feet long.

- Modification of the existing Replogle Flume within the Fresno Colony Canal would include plugging and filling the existing stilling well. A new stilling well would be

installed approximately 15 feet upstream of its current location. Excavation for the new stilling well would be 5 feet by 5 feet and 6 feet deep. An 8-inch deep concrete pad would be poured into the excavation and a 30-inch diameter concrete pipe would be placed on top of the pad. The area surrounding the stilling well would be backfilled with the excavated materials and leveled.

Construction equipment would include a backhoe and all staging would be done on the canal banks. Construction would occur during FID's regular maintenance period (mid to late October to March 1st).

The Proposed Action location is within Fresno County in the following locations (see Figure 1):

- American Colony Canal Headworks (T14S, R20E, Sections 25 and 36)
- Fresno Colony Canal Headworks (T14S, R20E, Sections 24 and 25 and T14S, R21E, Sections 19 and 30)

<u>Exclusion Category</u>: 516 DM 14.5D (1). Maintenance, rehabilitation, and replacement of existing facilities which may involve a minor change in size, location, and/or operation.

Figure 1. Proposed Action Locations (Note that the Fresno Colony Canal and American Colony Canal are listed as the Central Canal in this figure).

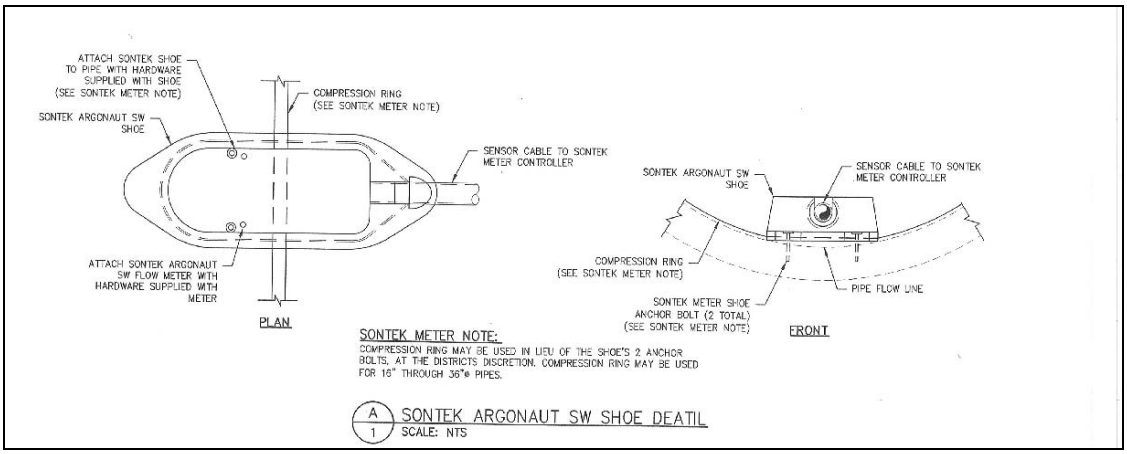

Figure 2. Shoe detail for Flowmeter installation

Evaluation of Criteria for Categorical Exclusion

1. This action or group of actions would have a significant effect on the quality of the human environment.	No _X_	Uncertain ___	Yes
2. This action or group of actions would involve unresolved conflicts concerning alternative uses of available resources.	No _X_	Uncertain ___	Yes

Evaluation of Exemptions to Actions within Categorical Exclusion

1. This action would have significant adverse effects on public health or safety.	No _X_	Uncertain ___	Yes
2. This action would have an adverse effect on unique geological features such as wetlands, wild or scenic rivers, refuges, flood plains, rivers placed on the nationwide river inventory, or prime or unique farmlands. (Same as 516 DM 2, Appendix 2, Part 2.2).	No _X_	Uncertain ___	Yes
3. This action will have highly controversial environmental effects.	No _X_	Uncertain ___	Yes
4. This action will have highly uncertain environmental effects or involve unique or unknown environmental risks.	No _X_	Uncertain ___	Yes
5. This action will establish a precedent for future actions.	No _X_	Uncertain ___	Yes

6. This action is related to other actions with individually insignificant but cumulative significant environmental effects.	No __X__	Uncertain ____	Yes
7. This action will affect properties listed or eligible to be listed in the National Register of Historical Places.	No __X__	Uncertain ____	Yes
8. This action will adversely affect a species listed or proposed to be listed as endangered or threatened.	No __X__	Uncertain ____	Yes
9. This action threatens to violate Federal, State, Local or Tribal law or requirements imposed for protection of the environment.	No __X__	Uncertain ____	Yes
10. This action will affect Indian Trust Assets.	No __X__	Uncertain ____	Yes
11. This action will disproportionately affect minority or low-income populations.	No __X__	Uncertain ____	Yes

NEPA Action: Categorical Exclusion __X__

Environmental commitments, explanation, and/or remarks:

☒Yes ☐No Environmental commitments are required and attached.

- ☐ San Joaquin Kit Fox Avoidance and Minimization Measures
- ☐ Giant Garter Snake Avoidance and Minimization Measures
- ☐ California Tiger Salamander Avoidance and Minimization Measures
- ☐ California Red-Legged Frog Avoidance and Minimization Measures
- ☒ Other: Burrowing Owl Avoidance and Minimization Measures

Air Quality:
Dust control best management practices would be employed by FID during construction activities. Construction emissions would be well below the *de minimis* thresholds for the San Joaquin Valley Air Pollution Control Board.

Prepared by:

Rain Healer Date: June 16, 2010

South-Central California Area Office

Regional Archeologist concurrence with Item 7:
See attachment.

ITA Designee concurrence with Item 10:
See attachment.

Concur:

Shauna McDonald Date: 1/28/11
Wildlife Biologist, South-Central California Area Office

Concur:

Date: 1/28/11
Supervisory Natural Resources Specialist, South-Central California Area Office

Concur:

Date: 1/28/11
"For" Chief, Resources Management Division, South-Central California Area Office

Approved:

for Jose Rogers Date: 1/28/11
Deputy Area Manager, South-Central California Area Office

State of California

Memorandum

: "Div. Chiefs - IFD, BDD, NED, & WMD
Reg. Mgrs. - Regions 1, 2, 3, 4, & 5

Date : October 17, 1995

From : Department of Fish and Game

Subject :
Staff Report on Burrowing Owl Mitigation

I am hereby transmitting the Staff Report on Burrowing Owl Mitigation for your use in reviewing projects (California Environmental Quality Act [CEQA] and others) which may affect burrowing owl habitat. The Staff Report has been developed during the last several months by the Environmental Services Division (ESD) in cooperation with the Wildlife Management Division (WMD) and regions 1, 2, and 4. It has been sent out for public review and redrafted as appropriate.

Either the mitigation measures in the staff report may be used or project specific measures may be developed. Alterative project specific measures proposed by the Department divisions/regions or by project sponsors will also be considered. However, such mitigation measures must be submitted to ESD for review. The review process will focus on the consistency of the proposed measure with Department, Fish and Game Commission, and legislative policy and with laws regarding raptor species. ESD wiIl coordinate project specific mitigation measure review with WMD.

If you have any questions regarding the report, please contact Mr. Ron Rempel, Supervising Biologist, Environmental Services Division, telephone (916) 654-9980.

COPY Original signed by C.F. Raysbrook

C. F. Raysbrook
Interim Director

Attachment

cc: Mr. Ron Rempel
Department of Fish and Game
Sacramento

STAFF REPORT ON BURROWING OWL MITIGATION

Introduction

The Legislature and the Fish and Game Commission have developed the policies, standards and regulatory mandates to protect native species of fish and wildlife. In order to determine how the Department of Fish and Game (Department) could judge the adequacy of mitigation measures designed to offset impacts to burrowing owls *(Speotyto cunicularia;* A.O.U. 1991) staff (WMD, ESD, and Regions) has prepared this report. To ensure compliance with legislative and commission policy, mitigation requirements which are consistent with this report should be incorporated into: (1) Department comments to Lead Agencies and project sponsors pursuant to the California Environmental Quality Act (CEQA); and (2) other authorizations the Department gives to project proponents for projects impacting burrowing owls.

This report is designed to provide the Department (including regional offices and divisions), CEQA Lead Agencies and project proponents the context in which the Environmental Services Division (ESD) will review proposed project specific mitigation measures. This report also includes preapproved mitigation measures which have been judged to be consistent with policies, standards and legal mandates of the Legislature,. the Fish and Game Commission and the Department's public trust responsibilities. Implementation of mitigation measures consistent with this report are intended to help achieve the conservation of burrowing owls and should compliment multi-species habitat conservation planning efforts currently underway. The *Burrowing Owl Survey Protocol and Mitigation Guidelines* developed by The California Burrowing Owl Consortium (CBOC 1993) were taken into consideration in the preparation of this staff report as were comments from other interested parties.

A range-wide conservation strategy for this species is needed. Any range-wide conservation strategy should establish criteria for avoiding the need to list the species pursuant to either the California or federal Endangered Species Acts through preservation of existing habitat, population expansion into former habitat, recruitment of young into the population, and other specific efforts.

California's burrowing owl population is clearly declining and, if declines continue, the species may qualify for listing. Because of the intense pressure for urban development within suitable burrowing owl nesting and foraging habitat (open, flat and gently rolling grasslands and grass/shrub lands) in California, conflicts between owls and development projects often occur. Owl survival can be adversely affected by disturbance and foraging habitat loss even when impacts to individual birds and nests/burrows are avoided. Adequate information about the presence of owls is often unavailable prior to project approval. Following project approval there is no legal mechanism through which to seek mitigation other than avoidance of occupied burrows or nests. The absence of standardized survey methods often impedes consistent impact assessment.

Burrowing Owl Habitat Description

Burrowing owl habitat can be found in annual and perennial grasslands, deserts, and arid scrublands characterized by low-growing vegetation (Zarn 1974). Suitable owl habitat may also include trees and shrubs if the canopy covers less than 30 percent of the ground surface. Burrows are the essential component of burrowing owl habitat. Both natural and artificial burrows provide protection, shelter, and nests for burrowing owls (Henny and Blus 1981). Burrowing owls typically use burrows made by fossorial mammals, such as ground squirrels or badgers, but also may use man-made structures such as cement culverts; cement, asphalt, or wood debris piles; or openings beneath cement or asphalt pavement.

Occupied Burrowing Owl Habitat

Burrowing owls may use a site for breeding, wintering, foraging, and/or migration stopovers. Occupancy of suitable burrowing owl habitat can be verified at a site by detecting a burrowing owl, its molted feathers, cast pellets, prey remains, eggshell fragments, or excrement at or near a burrow entrance. Burrowing owls exhibit high site fidelity, reusing burrows year after year (Rich 1984, Feeney 1992). A site should be assumed occupied if at least one burrowing owl has been observed occupying a burrow there within the last three years (Rich 1984).

CEQA Project Review

The measures included in this report are intended to provide a decision-making process that should be implemented whenever-there is potential for-an action or project to adversely affect burrowing owls. For projects subject to the California Environmental Quality Act (CEQA), the process begins by conducting surveys to determine if burrowing owls are foraging or nesting on or adjacent to the project site. If surveys confirm that the site is occupied habitat, mitigation measures to minimize impacts to burrowing owls, their burrows and foraging habitat should be incorporated into the CEQA document as enforceable conditions. The measures in this document are intended to conserve the species by protecting and maintaining viable' populations of the species throughout their range in California. This may often result in protecting and managing habitat for the species at sites away from rapidly urbanizing/developing areas. Projects and situations vary and mitigation measures should be adapted to fit specific circumstances.

Projects not subject to CEQA review may have to be handled separately since the legal authority the Department has with respect to burrowing owls in this type of situation is often limited. The burrowing owl is protected from "take" (Section 3503.5 of the Fish and Game Code) but unoccupied habitat is likely to be lost for activities not subject to CEQA.

Legal Status

The burrowing owl is a migratory species protected by international treaty under the Migratory Bird Treaty Act (MBTA) of 1918 (16 U.S.C. 703-711). The MBTA makes it unlawful to take, possess, buy, sell, purchase, or barter any migratory bird listed in 50 C.F.R. Part 10, including feathers or other parts, nests, eggs, or products, except as allowed by implementing regulations (50 C.F.R. 21). Sections 3505, 3503.5, and 3800 of the California Department of Fish and Game Code prohibit the take, possession, or destruction of birds, their nests or eggs. To avoid violation of the take provisions of these laws generally requires that project-related disturbance at active nesting territories be reduced or eliminated during the nesting cycle (February 1 to August 31). Disturbance that causes nest abandonment and/or loss of reproductive effort (e.g., killing or abandonment of eggs or young) may be considered "take"' and is potentially punishable by fines and/or imprisonment.

The burrowing owl is a Species of Special Concern to California because of declines of suitable habitat and both localized and statewide population declines. Guidelines for the Implementation of the California Environmental Quality Act (CEQA) provide that a species be considered as endangered or "rare" regardless of appearance on a formal list for the purposes of the CEQA (Guidelines, Section 15380, subsections b and d). The CEQA requires a mandatory findings of significance if impacts to threatened or endangered species are likely to occur (Sections 21001 (c), 2103; Guidelines 15380, 15064, 15065). To be legally adequate, mitigation measures must be capable of "avoiding the impact altogether by not taking a certain action or parts of an action"; "minimizing impacts by limiting the degree or magnitude of the action and its implementation"; "rectifying the impact by repairing, rehabilitating or restoring the impacted environment"; "or reducing or eliminating the impact over time by preservation and maintenance operations during the life of the action" (Guidelines, Section 15370). Avoidance or mitigation to reduce impacts to less than significant levels must be included in a project or the CEQA lead agency must make and justify findings of overriding considerations.

Impact Assessment

Habitat Assessment

The project site and a 150 meter (approximately 500 ft.) buffer (where possible and appropriate based on habitat) should be surveyed to assess the presence of burrowing owls and their habitat (Thomsen 1971, Martin 1973). If occupied habitat is detected on or adjacent to the site, measures to avoid, minimize, or mitigate the project's impacts to the species should be incorporated into the project, including burrow preconstruction surveys to ensure avoidance of direct take. It is also recommended that preconstruction surveys be conducted if the species was not detected but is likely to occur on the project site.

Burrowing Owl and Burrow Surveys

Burrowing owl and burrow surveys should be conducted during both the wintering and nesting seasons, unless the species is detected on the first survey. If possible, the winter survey should be conducted between December 1 and January 31 (when wintering owls are most likely to be present) and the nesting season survey should be conducted between April 15 and July 15 (the peak of the breeding season). Surveys conducted from two hours before sunset to one hour after, or from one hour before to two hours after sunrise, are also preferable.

Surveys should be conducted by walking suitable habitat on the entire project site and (where possible) in areas within 150 meters (approx. 500 ft.) of the project impact zone. The 150-meter buffer zone is surveyed to identify burrows and owls outside of the project area which may be impacted by factors -such as noise and vibration (heavy equipment, etc.) during project construction. Pedestrian survey transects should be spaced to allow 100 percent visual coverage of the ground surface. The distance between transect center lines should be no more than 30 meters (approx. 100 ft.) and should be reduced to account for differences in terrain, vegetation density, and ground surface visibility. To effectively survey large projects (100 acres or larger), two or more surveyors should be used to walk adjacent transects. To avoid impacts to owls from surveyors, owls and/or occupied burrows should be avoided by a minimum of 50 meters (approx. 160 ft.) wherever practical. Disturbance to occupied burrows should be avoided during all seasons.

Definition of Impacts

The following should be considered impacts to the species:

- Disturbance within 50 meters (approx. 160 ft.) Which may result in harassment of owls at occupied burrows;
- Destruction of natural and artificial burrows (culverts, concrete slabs and debris piles that provide shelter to burrowing owls); and
- Destruction and/or degradation of foraging habitat adjacent (within 100 m) of an occupied burrow(s).

Written Report

A report for the project should be prepared for the Department and copies should be submitted to the Regional contact and to the Wildlife Management Division Bird and Mammal Conservation Program. The report should include the following information:

- Date and time of visit(s) including name of the qualified biologist conducting surveys, weather and visibility conditions, and survey methodology;

- Description of the site including location, size, topography, vegetation communities, and animals observed during visit(s);

- Assessment of habitat suitability for burrowing owls;

- Map and photographs of the site;

- Results of transect surveys including a map showing the location of all burrow(s) (natural or artificial) and owl(s), including the numbers at each burrow if present and tracks, feathers, pellets, or other items (prey remains, animal scat);

- Behavior of owls during the surveys;

- Summary of both winter and nesting season surveys including any productivity information and a map showing territorial boundaries and home ranges; and

- Any historical information (Natural Diversity Database, Department regional files? Breeding Bird Survey data, American Birds records, Audubon Society, local bird club, other biologists, etc.) regarding the presence of burrowing owls on the site.

Mitigation

The objective of these measures is to avoid and minimize impacts to burrowing owls at a project site and preserve habitat that will support viable owls populations. If burrowing owls are detected using the project area, mitigation measures to minimize and offset the potential impacts should be included as enforceable measures during the CEQA process.

Mitigation actions should be carried out from September 1 to January 31 which is prior to the nesting season (Thomsen 1971, Zam 1974). Since the timing of nesting activity may vary with latitude and climatic conditions, this time frame should be adjusted accordingly. Preconstruction surveys of suitable habitat at the project site(s) and buffer zone(s) should be conducted within the 30 days prior to construction to ensure no additional, burrowing owls have established territories since the initial surveys. If ground disturbing activities are delayed or suspended for more than 30 days after the preconstruction survey, the site should be resurveyed.

Although the mitigation measures may be included as enforceable project conditions in the CEQA process, it may also be desirable to formalize them in a Memorandum of Understanding (MOU) between the Department and the project sponsor. An MOU is needed when lands (fee title or conservation easement) are being transferred to the Department.

Specific Mitigation Measures

1. Occupied burrows should not be disturbed during the nesting season (February 1 through August 3 1) unless a qualified biologist approved by the Department verifies through non-invasive methods that either: (1) the birds have not begun egg-laying and incubation; or (2) that juveniles from the occupied burrows are foraging independently and are capable of independent survival.

2. To offset the loss of foraging and burrow habitat on the project site, a minimum of 6.5 acres of foraging habitat (calculated on a 100 m {approx. 300 ft.} foraging radius around the burrow) per pair or unpaired resident bird, should be acquired and permanently protected. The protected lands should be adjacent to occupied burrowing owl habitat and at a location acceptable to the Department. *Protection of additional habitat acreage per pair or unpaired resident bird may be applicable in some instances.* The CBOC has also developed mitigation guidelines (CBOC 1993) that can be incorporated by CEQA lead agencies and which are consistent with this staff report.

3. When destruction of occupied burrows is unavoidable, existing unsuitable burrows should be enhanced (enlarged or cleared of debris) or new burrows created (by installing artificial burrows) at a ratio of 2:1 on the protected lands site. One example of an artificial burrow design is provided in Attachment A.

4. If owls must be moved away from the disturbance area, passive relocation techniques (as described below) should be used rather than trapping. At least one or more weeks will be necessary to accomplish this and allow the owls to acclimate to alternate burrows.

5. The project sponsor should provide funding for long-term management and monitoring of the protected lands. The monitoring plan should include success criteria, remedial measures, and an annual report to the Department.

Impact Avoidance

If avoidance is the preferred method of dealing with potential project impacts, then no disturbance should occur within 50 meters (approx. 160 ft.) of occupied burrows during the nonbreeding season of September 1 through January 31 or within 75 meters (approx. 250 ft.) during the breeding season of February 1 through August 31. Avoidance also requires that a minimum of 6.5 acres of foraging habitat be *permanently* preserved contiguous with occupied burrow sites for each pair of breeding burrowing owls (with or without dependent young) or single unpaired resident bird. The configuration of the protected habitat should be approved by the Department.

Passive Relocation - With One-Way Doors

Owls should be excluded from burrows in the immediate impact zone and within a 50 meter (approx. 160 ft.) buffer zone by installing one-way doors in burrow entrances. One-way doors (e.g., modified dryer vents) should be left in place 48 hours to insure owls have left the burrow before excavation. Two natural or artificial burrows should be provided for each burrow in the project area that will be rendered biologically unsuitable. The project area should be *monitored daily for one* week to confirm owl use of burrows before excavating burrows in the immediate impact zone. Whenever possible, burrows should be excavated using hand tools and refilled to prevent reoccupation. Sections of flexible plastic pipe should be inserted into the tunnels during excavation to maintain an escape route for any animals inside the burrow.

Passive Relocation - Without One-Way Doors

Two natural or artificial burrows should be provided for each burrow in the project area that will be rendered biologically unsuitable. The project area should be *monitored daily until the owls have relocated to the new burrows.* The formerly occupied burrows may then. be excavated. Whenever possible, burrows should be excavated using hand tools and refilled to prevent reoccupation. Sections of flexible plastic pipe should be inserted into burrows during excavation to maintain an escape route for any animals inside the burrow.

Projects Not Subject to CEQA

The Department is often contacted regarding the presence of burrowing owls on construction sites, parking lots and other areas for which there is no CEQA action or for which the CEQA process has been completed. In these situations, the Department should seek to reach agreement with the project sponsor to implement the specific mitigation measures described above. If they are unwilling to do so, passive relocation without the aid of one-way doors is their only option based upon Fish and Game Code 3503.5.

Literature Cited

American Ornithologists Union (AOU). 1991. Thirty-eighth supplement to the AOU checklist of North American birds. *Auk* 108:750-754.

Feeney, L. 1992. Site fidelity in burrowing owls. Unpublished paper presented to Raptor Research Annual Meeting, November 1992. Seattle, Washington.

Haug, E. A. and L. W. Oliphant. 1990, Movements, activity patterns, and habitat use of burrowing owls in Saskatchewan. *J. Wildlife Management* 54:27-35.

Henny, C. J. and L. J. Blus. 1981. Artificial burrows provide new insight into burrowing owl nesting biology. *Raptor Research* 15:82-85.

Martin, D. J. 1973. Selected aspects of burrowing owl ecology and behavior. *Condor* 75:446-456.

Rich, T. 1984. Monitoring burrowing owl populations: Implications of burrow re-use. *Wildlife Society Bulletin* 12:178-180.

The California Burrowing Owl Consortium (CBOC). 1993. Burrowing owl survey protocol and mitigation guidelines. Tech. Rep. Burrowing Owl Consortium, Alviso, California.

Thomsen, L. 1971. Behavior and ecology of burrowing owls on the Oakland Municipal Airport. *Condor* 73:177-192.

Zarn, M. 1974. Burrowing owl. U. S. Department of Interior, Bureau of Land Management. Technical Note T-N 250. Denver, Colorado. 25 pp.

Reproductive Success of Burrowing Owls Using Artificial Nest Burrows in Southeastern Idaho

by Bruce Olenick

Artificial nest burrows were implanted in southeastern Idaho f'or burrowing owls in the spring of 1986. These artificial burrows consisted of a 12" x 12" x 8" wood nesting chamber with rernovable top and a 6 foot corrugated and perforated plastic drainage pipe 6 inches in diameter (Fig. 1). Earlier investigators claimed that artificial burrows must provide a natural dirt floor to allow burrowing owls to modify the nesting tunnel and chamber. Contrary to this, the artificial burrow introduced here does not allow owls to modify the entrance or tunnel. The inability to change the physical dimensions of the burrow tunnel does not seem to reflect the owls' breeding success or deter them from using this burrow design.

In 1936, 22 artificial burrows were inhabited. Thirteen nesting attempts yielded an average clutch size of 8.3 eggs per breeding pair. Eight nests successfully hatched at least 1 nestling. In these nests, *67 of 75* eggs hatched (59.3%) and an estimated 61 nestlings (91.0%) fledged. An analysis of the egg laying and incubation periods showed that incubation commenced well after egg laying bega. Average clutch size at the start of incubation was 5.6 eggs. Most eggs tended to hatch synchronously in all successful nests.

Although the initial cost of constructing this burrow design may be slightly higher than a burrow consisting entirely of wood, the plastic pipe burrow offers the following advantages: (1) it lasts several field seasons without rotting or collapsing; (2) it may prevent or retard predation; (3) construction time is minimal; (4) it is easy to transport, especially over long distances; and (5) the flexible tunnel simplifies installation. The use of this artificial nest burrow design was highly successful and may prove to be a great resource technique for future management of this species.

For additional information on constructing this artificial nest burrow, contact Bruce Olenick, Department of Biology, Idaho State University, Pocatello, ID 83209.

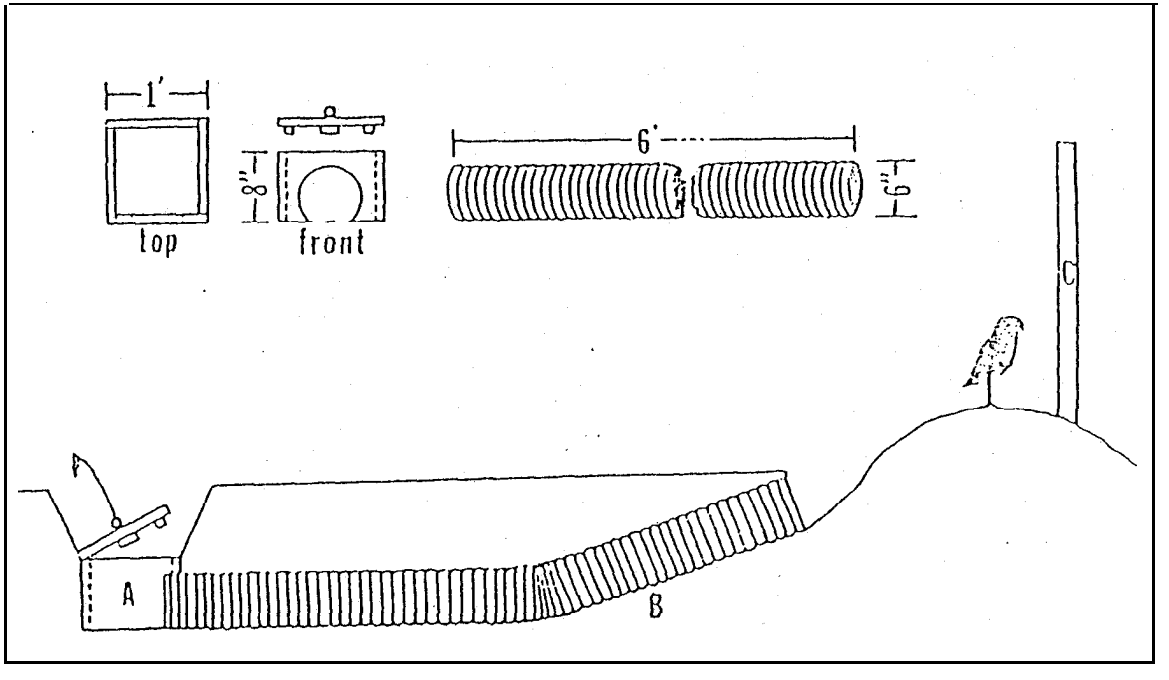

fig. 1 Artificial nest burrow design for burrowing owls Entire unit (including nest chamber) is buried 12" -- 18" below ground for maintaining thermal stability of the nest chamber. A= nest chamber, B = plastic pipe. C = perch.

ATTACHMENT A

Healer, Rain L

From: McDonald, Shauna A
Sent: Friday, January 28, 2011 11:28 AM
To: Healer, Rain L
Cc: Hyatt, David E
Subject: CEC-10-17 FID Field Services Grant
Attachments: burowlmit.pdf

Hi Rain. This is an update on the biological resources for this project. As the project's start time has been delayed, the burrowing owl survey may need to be done during a different time than I previously thought. Nothing else has changed, it's just that per the DFG staff report, the surveys need to timed right and so now a winter survey is likely not appropriate. If FID can hire a biologist do the survey, that's probably the most efficient. If they have a big problem with that, I can ask Dave if I could go out there one evening or early morning and do the survey. One issue is that now they've missed the winter season, and it's recommended that breeding season surveys not be started until April.

Thanks.

Shauna A. McDonald
Wildlife Biologist
Bureau of Reclamation
South-Central California Area Office
Fresno, CA 93721
(559) 487-5202
(559) 487-5397 (fax)
smcdonald@usbr.gov

Healer, Rain L

From: McDonald, Shauna A
Sent: Friday, July 09, 2010 9:57 AM
To: Healer, Rain L
Subject: RE: CEC-10-17 FID Field Services Grant

Hi Rain. I have reviewed this CEC for Reclamation's proposed action of awarding a Water Conservation Field Services Program Grant to the Fresno Irrigation District for their project, which would involve installation of telemetry equipment at the American Colony Canal and the Fresno Colony Canal, installation of a flowmeter in the American Colony Canal, and modification of an existing Replogle Flume in the Fresno Colony Canal.

There is no critical habitat in the action area. I checked the 2005 one meter color imagery in ArcMap, and as I suspected, these areas are basically urbanized—within the Fresno city limits. There is not an urban kit fox population this far north, so I see no potential for any impact on a Federally listed or proposed species. This means that this project will not require any kit fox survey or measures. I coordinated with the Service and they're aware of the proposed work. There still may be burrowing owls in the action area, and since they're protected under the Migratory Bird Treaty Act, I will check the burrowing owl measures box on the CEC, and I'll plan to do a quick survey in early fall to make sure that any wintering owls are avoided.

Thanks.

Shauna A. McDonald
Wildlife Biologist
Bureau of Reclamation
South-Central California Area Office
Fresno, CA 93721
(559) 487-5202
(559) 487-5397 (fax)
smcdonald@usbr.gov

From: Healer, Rain L
Sent: Thursday, July 01, 2010 2:06 PM
To: McDonald, Shauna A; Gruenhagen, Ned M; Lewis, Jennifer
Subject: CEC-10-17 FID Field Services Grant

Hello guys,

I sent this CEC out on June 16th and never heard who has been assigned to it. It may have been lost in the midst of Mike leaving. Could you let me know who will be taking it? Thanks.

Cost authority: A10-1971-1000-000-00-0-0

Rain L. Healer
Natural Resource Specialist
Bureau of Reclamation
1243 N Street, SCC 413
Fresno, CA 93721
(559) 487-5196
rhealer@usbr.gov

Healer, Rain L

From: Nickels, Adam M
Sent: Thursday, January 27, 2011 4:11 PM
To: Healer, Rain L
Cc: Jennifer Williams; Siek, Charles R; Woolley, David L; Barnes, Amy J; Bruce, Brandee E; Dunay, Amy L; Fogerty, John A; Goodsell, Joanne E; Overly, Stephen A; Perry, Laureen (Laurie) M
Subject: CEC-10-17 2010 Waterconservation Field Services Grant FID, Americn and Fresnlo Colony Canal Projects
Attachments: 10-SCAO-247 SHPO Concurence.pdf; 10-SCAO-247 SHPO Consultation.pdf; image005.png; image006.jpg

Project No. 10-SCAO-247

Rain:

The proposed undertaking for Reclamation to provide funding through its 2010 Water Conservation Field Services Grant to the Fresno Irrigation District for the purpose of:

- Installation of a new flowmeter in the American Colony Canal. The flowmeter would be placed within the existing concrete pipeline using anchor bolts (see Figure 2).

- Installation of Systematic Control and Data Acquisition (SCADA) telemetry equipment within a new SCADA enclosure next to the existing check structures at the American Colony Canal and Fresno Colony Canal. The new three-foot by three-foot by 18-inch enclosure would be mounted to a four inch metal pole that would be embedded 30 inches into the ground. Location of the poles would be within the canal banks approximately five feet from their Headgates.

- A 1.5 inch polyvinyl chloride conduit would be installed underground and run from the SCADA enclosure to the existing and new flowmeters. Trenching for the conduit would be 18 inches deep and 6 inches wide and approximately 4 feet long.

- Modification of the existing Replogle Flume within the Fresno Colony Canal would include plugging and filling the existing stilling well. A new stilling well would be installed approximately 15 feet upstream of its current location. Excavation for the new stilling well would be five feet by five feet and six feet deep. An eight-inch deep concrete pad would be poured into the excavation and a 30-inch diameter concrete pipe would be placed on top of the pad. The area surrounding the stilling well would be backfilled with the excavated materials and leveled.

The above described actions were determined to be the type of activity that had the potential to cause effects to historic properties. As a result, Reclamation initiated the Section 106 consultation process with the California State Historic Preservation Officer (SHPO) seeking their concurrence on our finding that the proposed undertaking would result in no adverse effect to historic properties. Reclamation initiated this consultation on January 13, 2010 (Attached). The SHPO concurred with Reclamation's findings on January 24, 2010 (enclosed). The SHPO concurrence was received by Reclamation on January 27, 2010.

After receiving SHPO concurrence on this undertaking I am no able to concur with line 7 of the CEC 10-17 titled "*2010 Water Conservation Field Services Grant Fresno Irrigation District American Colony and Fresno Colony headworks Projects."* –Dated May 12, 2010.

Location: The legal description for the APE at location 1 is the SW¼SW¼SW¼, sec. 25, and the NW¼NW¼NW¼, sec 36, T. 14 S., R. 20 E., Mount Diablo Meridian, as depicted on the Fresno South 7.5-minute USGS topographic quadrangle. The legal description for the APE at location 2 is the SE¼SE¼SE¼, sec. 24, and the NE¼NE¼NE¼, sec 25, T. 14 S., R. 20 E., Mount Diablo Meridian, as depicted on the Malaga 7.5-Minute USGS topographic quadrangle.

Exclusion Category: 516 DM 14.5D (1). Maintenance, rehabilitation, and replacement of existing facilities which may involve a minor change in size, location, and/or operation.

This email memo is intended to convey the completion of the Section 106 process for this undertaking. Please retain a copy of this email memo and its attachments with the CEC file. Thank you for providing the opportunity to comment.

Sincerely

Adam M. Nickels - Archaeologist - M.S.
Phone: 916.978.5053 - Fax: 916978.5055 - www.usbr.gov

-Mid-Pacific Regional Office MP-153 2800 Cottage Way - Sacramento, California 95825

OFFICE OF HISTORIC PRESERVATION
DEPARTMENT OF PARKS AND RECREATION
1725 23rd Street, Suite 100
SACRAMENTO, CA 95816-7100
(916) 445-7000 Fax: (916) 445-7053
calshpo@parks.ca.gov
www.ohp.parks.ca.gov

January 24, 2011

In Reply Refer To: BUR110114A

Michael A. Chotkowski
Regional Environmental Officer
United States Department of the Interior
Bureau of Reclamation
Mid-Pacific Regional Office
2800 Cottage Way
Sacramento, CA 95825-1898

Re: Proposed Improvements to the Fresno Colony Headworks No. 24 and the American Colony Headworks No. 27 of the Fresno Irrigation District, Fresno County, California (Project No. 10-SCAO-247).

Dear Mr. Chotkowski:

Thank you for consulting with me regarding the above noted undertaking. Pursuant to 36 CFR Part 800 (as amended 8-05-04) regulations implementing Section 106 of the National Historic Preservation Act (NHPA), the Bureau of Reclamation (BUR) is the lead Federal agency for this undertaking and is seeking my comments on the effects that the proposed project will have on historic properties. The project will consist of the installation of improvements and upgrades to the Fresno Colony Canal's Headworks No. 24 and the American Colony Canal's Headworks No. 27.

The BUR proposes to provide a grant to the Fresno Irrigation District (FID) to construct this project. The BUR has identified this use of federal funds as an undertaking subject to review under Section 106 regulations. The proposed improvements require minor excavation within the canal prisms required for the installation of a Systematic Control and Data Acquisition (SCADA) telemetry unit, flow meters, and a polyvinyl chloride conduit to connect the SCADA unit to the flow meters. Along with excavations in the canal embankments and canal bottoms, a concrete pad and 30-inch diameter pipe will be installed at each of the two project locations. Additionally, a Replogle Flume (flow measuring device) will be installed at the Fresno Colony Canal Headworks site. All access and staging will be via existing canal service roads. The Area of Potential Effects (APE) totals approximately 1.5 acres at the two project locations. In addition to your letter of January 13, 2011, you have submitted the following documents in support of your efforts to identify and evaluate historic properties in the project APE:

- *A Cultural Resources Assessment for the Fresno Irrigation District Fresno Colony No. 24 Headworks Project near Fresno, California* (Rebecca S. Orfila, RSO Consulting, July 2010a).

• *A Cultural Resources Assessment for the Fresno Irrigation District American Colony No. 27 Headworks Project near Fresno, California* (Rebecca S. Orfila, RSO Consulting: July 2010b).

Identification efforts by the BUR have concluded that the only historic properties in the APE are the Fresno Colony Canal (FCC) and the American Colony Canal (ACC). Both of these canals are of sufficient age to warrant recordation and treatment as historic properties. Lacking the resources to fully evaluate these linear water conveyance features under the constraints of this undertaking, the BUR assumes that both are eligible for the National Register of Historic Places under criterion A for the purposes of this undertaking only. Under this strategy, the BUR has determined that the proposed modifications consist of standard facility upgrades necessary to maintain the efficient operation of the FCC and ACC and that the proposed undertaking can be constructed with a finding of No Adverse Effect pursuant to 36 CFR Part 800.5(b). I have no objection to this finding.

Be advised that under certain circumstances, such as unanticipated discovery or a change in project description, the BUR may have additional future responsibilities for this undertaking under 36 CFR Part 800. Thank you for seeking my comments and for considering historic properties in planning your project. If you require further information, please contact William Soule, Associate State Archeologist, at phone 916-445-7022 or email wsoule@parks.ca.gov.

Sincerely,

Susan K Stratton for

Milford Wayne Donaldson, FAIA
State Historic Preservation Officer

Healer, Rain L

From: Rivera, Patricia L
Sent: Wednesday, June 16, 2010 10:52 AM
To: Healer, Rain L
Subject: RE: CEC-10-17 Fresno Irrigation District Field Services Grant

Rain,

I reviewed the proposed action to award a 2010 Water Conservation Field Services Program Grant to Fresno Irrigation District (FID) for their Project which would include:

- Installation of a new flowmeter in the American Colony Canal. The flowmeter would be placed within the existing concrete pipeline using anchor bolts.
- Installation of Systematic Control and Data Acquisition (SCADA) telemetry equipment within a new SCADA enclosure next to the existing check structures at the American Colony Canal and Fresno Colony Canal. The new three-foot by three-foot by 18-inch enclosure would be mounted to a four inch metal pole that would be embedded 30 inches into the ground. Location of the poles would be within the canal banks approximately five feet from their Headgates.
- A 1.5 inch polyvinyl chloride conduit would be installed underground and run from the SCADA enclosure to the existing and new flowmeters. Trenching for the conduit would be 18 inches deep and 6 inches wide and approximately 4 feet long.
- Modification of the existing Replogle Flume within the Fresno Colony Canal would include plugging and filling the existing stilling well. A new stilling well would be installed approximately 15 feet upstream of its current location. Excavation for the new stilling well would be five feet by five feet and six feet deep. An eight-inch deep concrete pad would be poured into the excavation and a 30-inch diameter concrete pipe would be placed on top of the pad. The area surrounding the stilling well would be backfilled with the excavated materials and leveled.

Construction equipment would include a backhoe and all staging would be done on the canal banks. Construction would occur during FID's regular maintenance period (mid to late October to March 1st).

The proposed action does not have a potential to affect Indian Trust Assets. The nearest ITA is Table Mt. Rancheria, which is approx. 21 miles NNE of the project location.

Patricia