Perris Water Filtration Plant Reject Recovery Project

Award #R10AP35285

Final Project Report

Agreement #R10AP35285

Eastern Municipal Water District

2270 Trumble Road

Perris, CA 92572-8300

Recipient Name:	Eastern Municipal Water District 2270 Trumble Road Perris, CA 92572-8300 (951) 928 3777 Rania Odenbaugh, Engineering Project Control Manager, ext. 4541
Project Name:	Perris Water Filtration Plant Reject Recovery Facility
Assistance Agreement No:	R10AP35285
Date of Award:	September 2010
Estimated Completion:	April 2014
Actual Completion:	TBD

One Paragraph Project Summary:

The Perris Water Filtration Plant (PWFP) has a capacity of 24 million gallons per day (mgd), and routinely operates at 96-98% recovery, resulting in a reject flow of 1.0 mgd at capacity. This reject flow is discharged to the sewer and processed at EMWD Perris Valley Regional Water Reclamation Facility (PVRWRF). The Reject Recovery Facility (RRF) diverts the reject stream from the sewer and treats the flow using low pressure membrane filtration. At capacity, approximately 0.85 mgd is returned to the beginning of the PWFP and 0.15 mgd is discharged to the sewer, resulting in a decrease in imported raw water and reduced flows to the wastewater treatment plant. The reduced demand on the PVRWRF results in substantial operations, maintenance, and energy savings. In addition, the reduced wastewater flow provides available capacity at the PVRWRF for future development.

Final Project Description:

The PWFP RRF is designed to treat up to one (1) mgd of reject from the PWPF using a low pressure membrane system and return the treated effluent to the head of the PWPF (see Figure 1 below). The RRF is equipped with GE ZeeWeed 500D submerged membranes and is designed to provide 85% recovery. The project consists of an equalization tank, membrane tanks, clean-in-place neutralization tanks, building, pumps, compressors, blowers, chemical systems, valves, piping necessary and other appurtenances necessary for treatment and conveyance of process streams between the PWFP and the RRF.

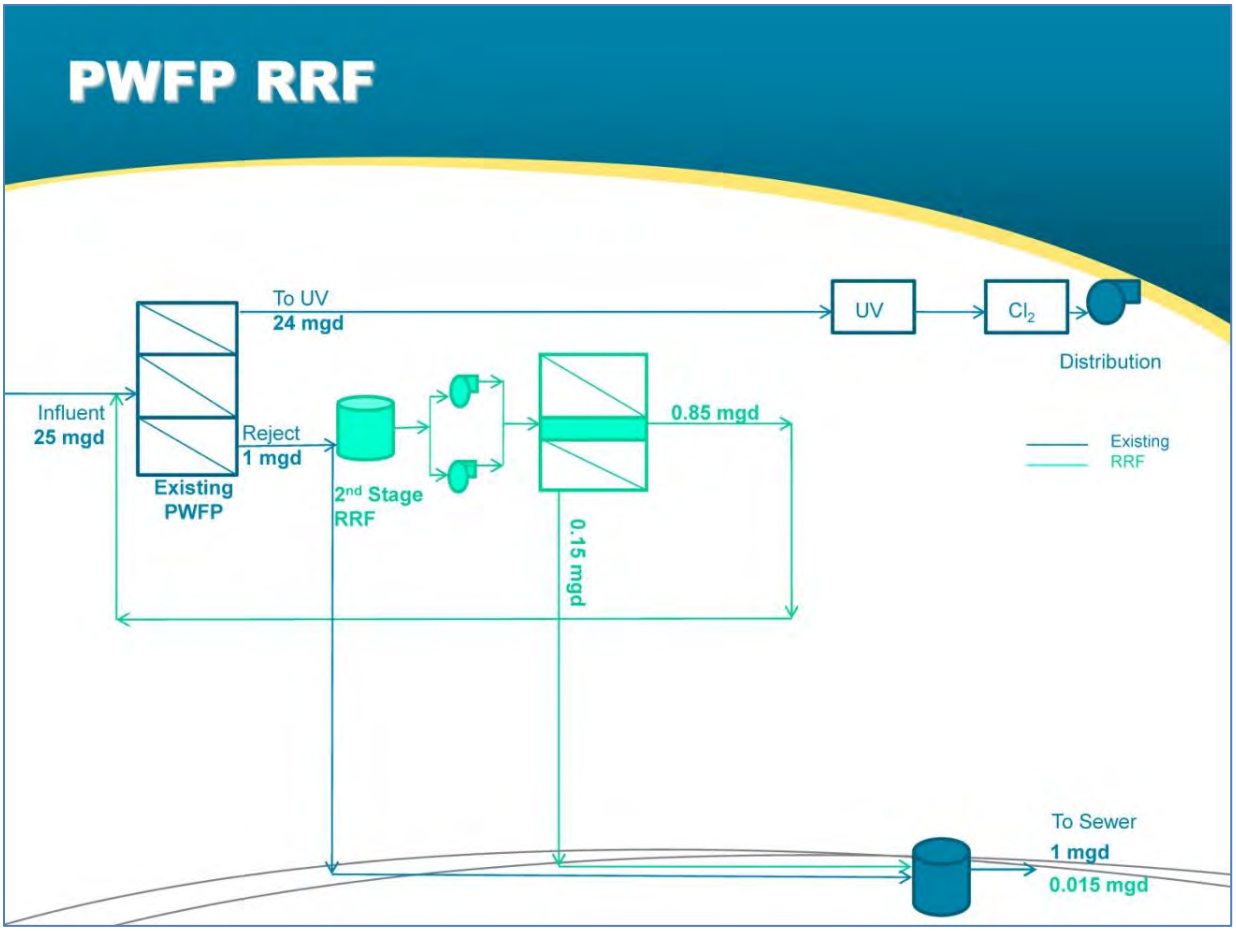

Figure 1 –Flow Schematic

The project will offset up to 0.85 mgd of imported raw water and reduce discharge to the sewer by the same amount, effectively regaining treatment capacity at the PVRWRF. Energy consumption is expected to be reduced up to 3,500kWh per day since energy required for treating reject at PVRWRF is greater than the estimated energy consumption at the RRF.

After establishing RRF performance through water quality monitoring, California Department of Public Health (CDPH) may allow the District to send the treated effluent directly to the PWFP disinfection system, which will effectively increase the capacity of the plant up to 0.85 MGD and provide additional savings.

Accomplishment of Project Goals:

Final performance validation of the Reject Recovery Facility will be performed after completion of the project, expected in April 2014. The Eastern Municipal Water District is confident that performance will meet the goals established at conclusion of the project design, because the performance of membrane technology is well established.

Discussion of Amount of Water Conserved, Marketed or Better Managed:

A. Recipient's total water supply (average, annual, available water supply in acre-feet per year:

The Eastern Municipal Water District delivered 89,000 acre-feet of water in fiscal year 2013. The Perris Water Filtration Plant is the largest facility water treatment facility operated by EMWD, and is responsible for 17% of the water delivered by the District.

B. Amount of water conserved, marketed or better managed as a result of the project (in acre-feet per year):

The Reject Recovery Facility Project is expected to treat up to 1 mgd of PWFP reject, and return 85% of treated effluent to the head of the plant. At the design capacity of 1 mgd, the project will conserve 0.85 mgd. The facility will conserve approximately 940 acre-feet of water annually at full capacity. The actual amount of water saved depends on numerous factors, including but not limited to weather, rainfall, source water, and economic conditions.

In the calendar year 2013, the Perris Water Filtration Plant delivered approximately 14,600 acre-feet of potable water, and rejected 607 acre-feet.

C. Describe how the amounts stated in response to item B above were calculated or estimated:

The PWFP has a design capacity of 24 mgd potable water production at a recovery of 96% to 98%. Recovery is defined as the percent of potable water production rate relative to raw water feed rate. Reject flows can be calculated by multiplying the percent of reject flows by the raw water feed rate. The RRF design capacity is based on PWPF design capacity of 24 mgd and 96% recovery, and therefore the PWFP has the capacity to produce up to 1 mgd of reject. Based on the design recovery of 85%, the RRF will provide up to 0.85 mgd of treated effluent to the head of the plant.

$$\%\ Recovery = \frac{Potable\ water\ (mgd)}{Raw\ water\ (mgd)}$$

$$Raw\ water\ \ mgd\ = \frac{Potable\ water\ (mgd)}{\%\ recovery} = \frac{24\ mgd}{0.96} = 25\ mgd$$

$$\%\ Reject\ = 1 - \%\ Recovery = 1 - 0.96 = 0.04$$

$$Reject\ flows = \%\ Reject\ \times Reject\ flow\ \ mgd\ = 0.04\ \times 25\ mgd = 1\ mgd$$

$$RRF\ treated\ effluent = PWFP\ Reject\ flow\ \times \%\ Recovery = 0.85\ \times 1 mgd = 0.85\ mgd$$

(1) Describe the information/data being relied on to calculate/estimate the project benefits. State how that data/information was obtained, if appropriate. Provide any other information necessary to explain how the final calculation/estimate of project benefits was made.

The PWFP design capacity and historical plant operating data were used to verify reject flow to size the RRF. The construction contract includes a performance guarantee from the membrane manufacturer, which requires a minimum recovery of 85%. Eight-five percent recovery is a realistic assumption since the performance of GE membrane systems is well established. The amount of water conserved can be calculated by multiplying the PWFP reject flows by the RRF recovery (85%).

(2) As appropriate, please include an explanation of any concerns or factors affecting the reliability of the data/information relied on.

The RRF is designed to treat up to 1 mgd of PWFP reject flows. The actual amount of water conserved is directly proportional (85%) to the PWFP production rate, which depends on numerous factors, including but not limited to weather, rainfall, source water, and economic conditions.

(3) Attach any relevant data, reports or other support relied on in the calculation/estimate of project benefits, if available. Please briefly describe the data/information attached, if any.

Specification 1169W – Perris Water Filtration Plant Reject Recovery Facility
Appendix D – GE Water and Process Technologies Prenegotiated Proposal

The above contract documents provide RRF capacity and performance requirements.

D. Use of Conserved Water:

Treated water from the Reject Recovery Facility is returned to the head of the plant where it is blended with raw water, reducing imported raw water by up to 940 acre-feet per year, with no decrease in potable water production.

E. Future tracking of project benefits:

The PWFP reject flow will be metered before it enters the RRF. The reject flow from the Reject Recovery Facility will also be metered prior to discharge to EMWD's sewer system. The difference in the quantities measured at the two points will be the volume of water recovered for potable use. These flows will be continually recorded for use in periodic reports.

Energy conservation will be measured by using the historical power consumption and flow quantities processed by EMWD's Perris Valley Regional Water Reclamation Facility (PVRWRF) as a baseline for projected savings. EMWD will determine the energy burden to PVRWRF by prorating the total energy usage for the PVRWRF, dividing that usage by the total flows influent to the facility and multiplying that value by the measured flow discharged to the sewer from the Reject Recovery Facility. That calculated energy use by the reject stream will be subtracted from the otherwise potential energy usage from sending the traditional 1.0 mgd of untreated reject water to the sewer. Also, the energy costs associated with the Reject Recovery Facility itself will be metered and deducted from the amount of savings from avoiding wastewater treatment. The methodology for this is demonstrated in the water and energy calculation portion of Tables 4 through 9 of the Technical Proposal.

Discussion of Amount of Renewable Energy Added:

While the project did not add new sources of renewable energy, significant energy savings were realized by reducing demand on the wastewater treatment plant. Specifically, the Reject Recovery Facility is estimated to consume 1,500 kWh per million gallons treated, compared to 5,912 kWh per million gallons treated by the Perris Valley Regional Water Reclamation Facility. The estimated energy savings is 3,500 kWh per day for every million gallons diverted to the RRF.

Describe how the project demonstrates collaboration, stakeholder involvement or the formation of partnerships, if applicable:

The Bureau of Reclamation and the Eastern Municipal Water District have collaborated on numerous projects in the past. With the assistance of the Bureau, the Perris Reject Recovery Project will result in reduced imports of raw water from the Colorado River and State Project Water, while reducing demand on the Perris Valley Regional Water Reclamation Facility and saving power.

Describe any other pertinent issues regarding the project:

None at this time.

Feedback to Reclamation regarding the WaterSMART Program:

No additional comments at this time

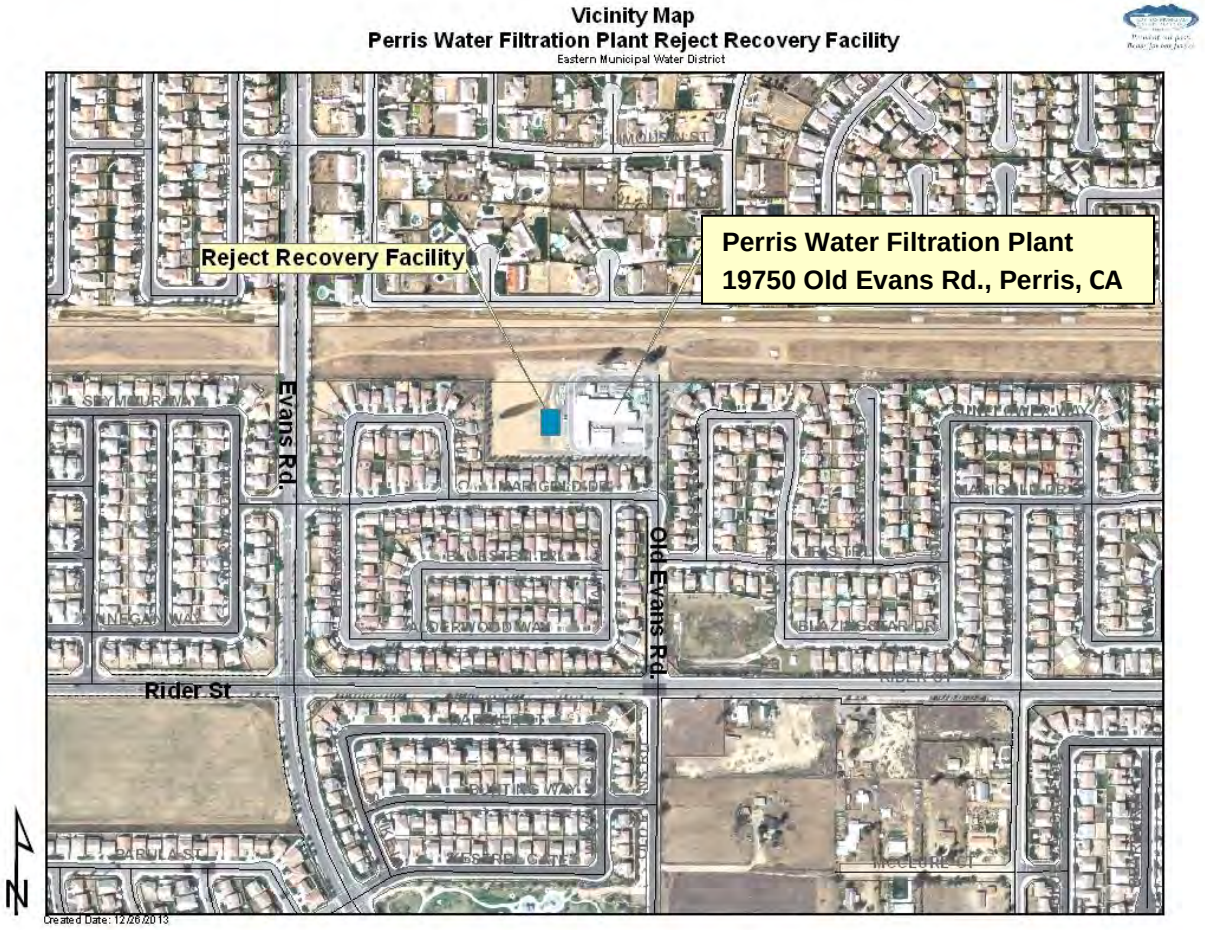
Vicinity Map
Perris Water Filtration Plant Reject Recovery Facility
Eastern Municipal Water District
Reject Recovery Facility
Perris Water Filtration Plant
19750 Old Evans Rd., Perris, CA
Evans Rd.
Old Evans Rd.
Rider St
N
Created Date: 12/26/2013

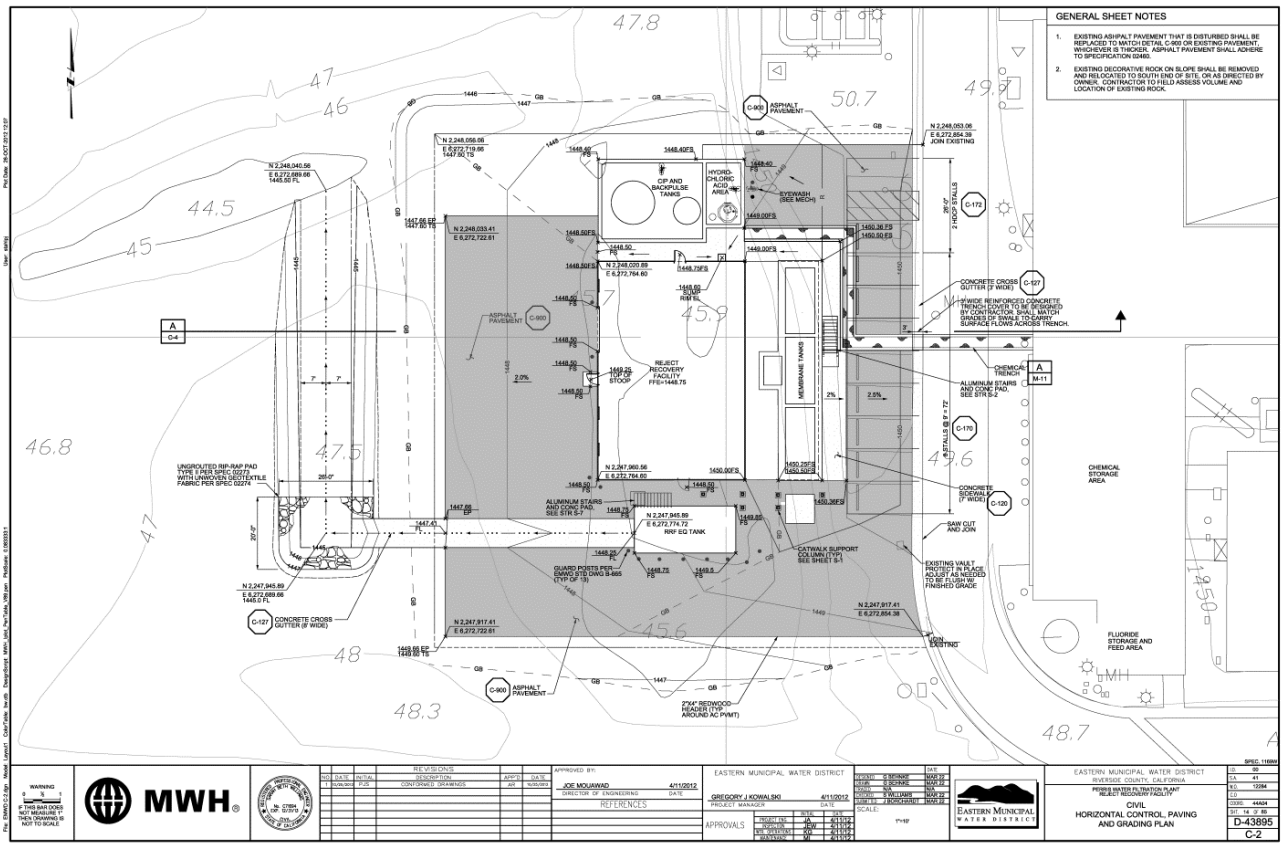
GENERAL SHEET NOTES
1. EXISTING ASPHALT PAVEMENT THAT IS DISTURBED SHALL BE REPLACED TO MATCH DETAIL C-900 OR EXISTING PAVEMENT, WHICHEVER IS THICKER. ASPHALT PAVEMENT SHALL ADHERE TO SPECIFICATION 02460.
2. EXISTING DECORATIVE ROCK ON SLOPE SHALL BE REMOVED AND RELOCATED TO SOUTH END OF SITE, OR AS DIRECTED BY OWNER. CONTRACTOR TO FIELD ASSESS VOLUME AND LOCATION OF EXISTING ROCK.
CIP AND BACKPULSE TANKS
HYDRO-CHLORIC ACID AREA
EYEWASH (SEE MECH)
MEMBRANE TANKS
REJECT RECOVERY FACILITY FFE=1448.75
CHEMICAL STORAGE AREA
FLUORIDE STORAGE AND FEED AREA
CONCRETE CROSS GUTTER (8' WIDE)
CONCRETE SIDEWALK (7' WIDE)
SAW CUT AND JOIN
EXISTING VAULT PROTECT IN PLACE, ADJUST AS NEEDED TO BE FLUSH W/ FINISHED GRADE
ASPHALT PAVEMENT
UNGROUTED RIP-RAP PAD TYPE II PER SPEC 02273 WITH UNWOVEN GEOTEXTILE FABRIC PER SPEC 02274
ALUMINUM STAIRS AND CONC PAD, SEE STR S-7
RRF EQ TANK
CATWALK SUPPORT COLUMN (TYP) SEE SHEET S-1
GUARD POSTS PER EMWD STD DWG S-665 (TYP OF 13)
2"X4" REDWOOD HEADER (TYP AROUND AC PVMT)
MWH
EASTERN MUNICIPAL WATER DISTRICT
GREGORY J KOWALSKI 4/11/2012
JOE MOUAWAD 4/11/2012
EASTERN MUNICIPAL WATER DISTRICT
RIVERSIDE COUNTY, CALIFORNIA
PERRIS WATER FILTRATION PLANT REJECT RECOVERY FACILITY
CIVIL
HORIZONTAL CONTROL, PAVING AND GRADING PLAN
D-43895
C-2

Membrane tank May 2013

RRF slab reinforcement June 2013

RRF structural steel August 2013

CIP tank installation August 2013

CIP pumps October 2013

RRF blowers January 2014

03/12/2014

NO PARKING
03/12/2014

Budget Item Description	$/Unit and Unit	Qty	Recipient funding	Reclamation funding	Total Cost
Salaries and Wages					
Direct labor			**$7,739.90**		**$7,739.90**
Engineering			**$466,346.17**		**$466,346.17**
Construction admin			**$59,400.71**		**$59,400.71**
Project specialist			**$87,105.86**		**$87,105.86**
Inspection			**$283,476.22**		**$283,476.22**
Supplies/Materials			**$8,832.31**		**$8,832.31**
Contractual/Construction			**$4,476,375.43**	**$300,000.00**	**$4,776,375.43**
Outside services			**$27,649.47**		**$27,649.47**
Lab tests			**$9,218.00**		**$9,218.00**
Engineering Consultants			**$1,467,277.30**		**$1,467,277.30**
Inspection consultants			**$1,212.00**		**$1,212.00**
Environmental services			**$64.00**		**$64.00**
Total Project Costs			**$6,894,697.37**	**$300,000.00**	**$7,194,697.37**

Total Expenditures for the Completed Project

Attachments:

The following documents are attached:

- PWFP Daily Flow Calendar for CY 2013
- PWFP Preliminary Design Report
- Specification 1169W – Perris Water Filtration Plant Reject Recovery Facility Appendix D – GE Water and Process Technologies Prenegotiated Proposal

Perris Water Filtration Plant Daily Flow in CFS

Date	Flow, CFS	Date	Flow, CFS	Date	Flow, CFS	Date	Flow, CFS
1/1/2013	3.9731	2/27/2013	12.1237	4/25/2013	27.3867	6/21/2013	27.0486
1/2/2013	4.2920	2/28/2013	12.4405	4/26/2013	28.9839	6/22/2013	27.3670
1/3/2013	11.6373	3/1/2013	24.8132	4/27/2013	30.6337	6/23/2013	27.3591
1/4/2013	14.6323	3/2/2013	25.8949	4/28/2013	30.5120	6/24/2013	26.8037
1/5/2013	14.8303	3/3/2013		4/29/2013	25.9017	6/25/2013	26.6286
1/6/2013	19.1334	3/4/2013	14.6944	4/30/2013	22.4352	6/26/2013	26.0448
1/7/2013	12.5266	3/5/2013	27.2063	5/1/2013	27.4954	6/27/2013	27.7869
1/8/2013	6.2661	3/6/2013	25.7024	5/2/2013	31.7032	6/28/2013	26.1616
1/9/2013		3/7/2013	18.3057	5/3/2013	31.2344	6/29/2013	29.9044
1/10/2013	4.6777	3/8/2013	8.9378	5/4/2013	20.7066	6/30/2013	30.5359
1/11/2013	10.0000	3/9/2013	4.1596	5/5/2013	16.2753	7/1/2013	28.9788
1/12/2013	10.3352	3/10/2013	17.8716	5/6/2013	16.2534	7/2/2013	24.7243
1/13/2013	21.1652	3/11/2013	24.0080	5/7/2013		7/3/2013	27.6675
1/14/2013	22.2490	3/12/2013	13.4669	5/8/2013		7/4/2013	30.3815
1/15/2013	19.2349	3/13/2013	13.5074	5/9/2013		7/5/2013	21.9420
1/16/2013	17.2719	3/14/2013	19.9855	5/10/2013	15.5634	7/6/2013	28.3659
1/17/2013	27.5942	3/15/2013	23.2258	5/11/2013	29.7062	7/7/2013	32.4028
1/18/2013	29.7967	3/16/2013	24.9121	5/12/2013	30.3182	7/8/2013	30.2055
1/19/2013	27.3888	3/17/2013	26.2460	5/13/2013	19.6949	7/9/2013	30.4682
1/20/2013	18.9092	3/18/2013	24.8265	5/14/2013	31.0290	7/10/2013	31.3831
1/21/2013	24.5956	3/19/2013	16.7817	5/15/2013	31.3312	7/11/2013	30.5538
1/22/2013	20.7035	3/20/2013	9.6063	5/16/2013	29.7826	7/12/2013	28.9847
1/23/2013	22.4893	3/21/2013	13.3314	5/17/2013	30.5242	7/13/2013	31.7678
1/24/2013	14.9816	3/22/2013	17.3780	5/18/2013	23.3626	7/14/2013	31.3180
1/25/2013	8.7494	3/23/2013	13.9017	5/19/2013	24.7504	7/15/2013	31.0625
1/26/2013	5.3791	3/24/2013	23.4919	5/20/2013	25.7791	7/16/2013	30.8955
1/27/2013	9.3342	3/25/2013	23.5446	5/21/2013	23.1232	7/17/2013	29.7135
1/28/2013	10.4660	3/26/2013	17.2536	5/22/2013	27.5310	7/18/2013	26.1861
1/29/2013	4.3952	3/27/2013	15.9381	5/23/2013	21.9079	7/19/2013	25.9468
1/30/2013	15.4321	3/28/2013	20.0428	5/24/2013	20.6424	7/20/2013	22.7008
1/31/2013	18.7080	3/29/2013	19.7079	5/25/2013	18.9241	7/21/2013	23.1491
2/1/2013	7.8744	3/30/2013	27.5879	5/26/2013	19.1085	7/22/2013	25.7445
2/2/2013	7.4689	3/31/2013	31.4258	5/27/2013	24.5206	7/23/2013	25.4684
2/3/2013	12.8656	4/1/2013	30.9284	5/28/2013	26.5882	7/24/2013	21.9032
2/4/2013	13.0936	4/2/2013	14.0890	5/29/2013	24.1456	7/25/2013	20.0555
2/5/2013	9.2070	4/3/2013	24.3581	5/30/2013	21.3363	7/26/2013	26.5639
2/6/2013	8.2739	4/4/2013	31.2503	5/31/2013	21.6499	7/27/2013	23.7873
2/7/2013	9.4540	4/5/2013	23.4910	6/1/2013	21.7042	7/28/2013	24.2057
2/8/2013	10.8936	4/6/2013	16.0644	6/2/2013	28.7429	7/29/2013	24.2696
2/9/2013	9.2157	4/7/2013	25.9387	6/3/2013	28.2578	7/30/2013	22.6646
2/10/2013	4.1970	4/8/2013	27.2247	6/4/2013	23.5892	7/31/2013	17.7718
2/11/2013	5.0820	4/9/2013	13.2864	6/5/2013	23.0595	8/1/2013	21.1378
2/12/2013		4/10/2013	14.8788	6/6/2013	24.6513	8/2/2013	24.6969
2/13/2013		4/11/2013	22.0043	6/7/2013	24.5308	8/3/2013	26.7661
2/14/2013	4.7834	4/12/2013	29.1646	6/8/2013	22.8774	8/4/2013	24.4944
2/15/2013	13.4965	4/13/2013	16.6269	6/9/2013	25.8610	8/5/2013	26.6144
2/16/2013	16.5474	4/14/2013	18.9002	6/10/2013	27.3651	8/6/2013	26.4653
2/17/2013	20.1770	4/15/2013	20.5280	6/11/2013	24.2050	8/7/2013	26.5305
2/18/2013	19.7593	4/16/2013	21.9045	6/12/2013	21.0940	8/8/2013	26.6399
2/19/2013	17.1342	4/17/2013	23.6270	6/13/2013	22.4212	8/9/2013	26.5712
2/20/2013	4.2986	4/18/2013	24.4713	6/14/2013	23.4393	8/10/2013	26.5082
2/21/2013	3.8680	4/19/2013	24.3284	6/15/2013	21.9429	8/11/2013	22.0324
2/22/2013	8.9308	4/20/2013	23.9715	6/16/2013	19.3206	8/12/2013	27.3550
2/23/2013	12.6770	4/21/2013	28.1682	6/17/2013	20.8195	8/13/2013	28.7039
2/24/2013	15.3865	4/22/2013	31.7845	6/18/2013	24.2580	8/14/2013	27.7912
2/25/2013	17.7916	4/23/2013	19.4062	6/19/2013	26.8840	8/15/2013	28.3020
2/26/2013	15.1297	4/24/2013	22.9740	6/20/2013	27.3725	8/16/2013	29.2953

Date	Flow, CFS	Date	Flow, CFS	Date	Flow, CFS		
8/17/2013	28.3573	10/14/2013	27.3682	12/11/2013	5.1838		
8/18/2013	28.2454	10/15/2013	20.1752	12/12/2013	7.0883		
8/19/2013	15.5879	10/16/2013	19.9275	12/13/2013	2.6310		
8/20/2013	15.8030	10/17/2013	19.9692	12/14/2013	4.5864		
8/21/2013	22.7594	10/18/2013	19.8077	12/15/2013	17.7288		
8/22/2013	29.9376	10/19/2013	20.0986	12/16/2013	20.8315		
8/23/2013	29.7005	10/20/2013	27.1550	12/17/2013	11.9663		
8/24/2013	29.2173	10/21/2013	28.9584	12/18/2013	9.3335		
8/25/2013	28.0846	10/22/2013	15.6498	12/19/2013	9.3017		
8/26/2013	26.9432	10/23/2013	19.2067	12/20/2013	9.3080		
8/27/2013	26.4001	10/24/2013	28.3994	12/21/2013	9.3408		
8/28/2013	26.7062	10/25/2013	24.6687	12/22/2013	10.6759		
8/29/2013	22.7064	10/26/2013	18.3614	12/23/2013	9.9856		
8/30/2013	21.9803	10/27/2013	25.3156	12/24/2013	11.7159		
8/31/2013	24.7018	10/28/2013	29.3441	12/25/2013	12.0121		
9/1/2013	22.2138	10/29/2013	21.0381	12/26/2013	7.7165		
9/2/2013	24.3491	10/30/2013	18.4081	12/27/2013	10.9260		
9/3/2013	22.7484	10/31/2013	14.3981	12/28/2013	10.9072		
9/4/2013	26.2362	11/1/2013	17.2603	12/29/2013	12.4223		
9/5/2013	26.0805	11/2/2013	19.5651	12/30/2013	14.6713		
9/6/2013	25.6393	11/3/2013	18.4476	12/31/2013	14.6285		
9/7/2013	27.3936	11/4/2013	18.0692				
9/8/2013	23.1442	11/5/2013	19.8651				
9/9/2013	23.1091	11/6/2013	20.1705				
9/10/2013	25.9359	11/7/2013	26.1674	Max value	34.9394		
9/11/2013	27.3567	11/8/2013	22.4833	Average	20.6018		
9/12/2013	25.9080	11/9/2013	17.0074				
9/13/2013	24.4511	11/10/2013	16.9887				
9/14/2013	23.8973	11/11/2013	16.9347				
9/15/2013	29.7751	11/12/2013	15.8991				
9/16/2013	20.6339	11/13/2013	19.6306				
9/17/2013	22.8732	11/14/2013	22.8682				
9/18/2013	8.7355	11/15/2013	17.3927				
9/19/2013	12.9872	11/16/2013	20.2931				
9/20/2013	24.5514	11/17/2013	26.3586				
9/21/2013	28.7134	11/18/2013	24.8481				
9/22/2013	28.6643	11/19/2013	14.8623				
9/23/2013	25.1430	11/20/2013	13.8678				
9/24/2013	24.0485	11/21/2013	12.7879				
9/25/2013	26.8260	11/22/2013	12.3768				
9/26/2013	29.7599	11/23/2013	7.7453				
9/27/2013	23.9047	11/24/2013	7.9264				
9/28/2013	27.3328	11/25/2013	7.7313				
9/29/2013	34.9394	11/26/2013	2.8382				
9/30/2013	32.5499	11/27/2013	4.4236				
10/1/2013	30.5886	11/28/2013	12.0281				
10/2/2013	25.6046	11/29/2013	12.7837				
10/3/2013	29.7963	11/30/2013	8.4597				
10/4/2013	30.2629	12/1/2013	12.7317				
10/5/2013	29.0502	12/2/2013	13.0885				
10/6/2013	29.0453	12/3/2013	9.0264				
10/7/2013	29.0800	12/4/2013	8.5370				
10/8/2013	23.3653	12/5/2013	16.9717				
10/9/2013	20.7603	12/6/2013	12.4973				
10/10/2013	15.7254	12/7/2013	7.7468				
10/11/2013	9.4287	12/8/2013	10.9632				
10/12/2013	8.3651	12/9/2013	11.5006				
10/13/2013	23.1899	12/10/2013	1.3277				

Prepared for
Eastern Municipal Water District

Perris Water Filtration Plant Reject Recovery Facility

PRELIMINARY DESIGN REPORT
FINAL

February 2012

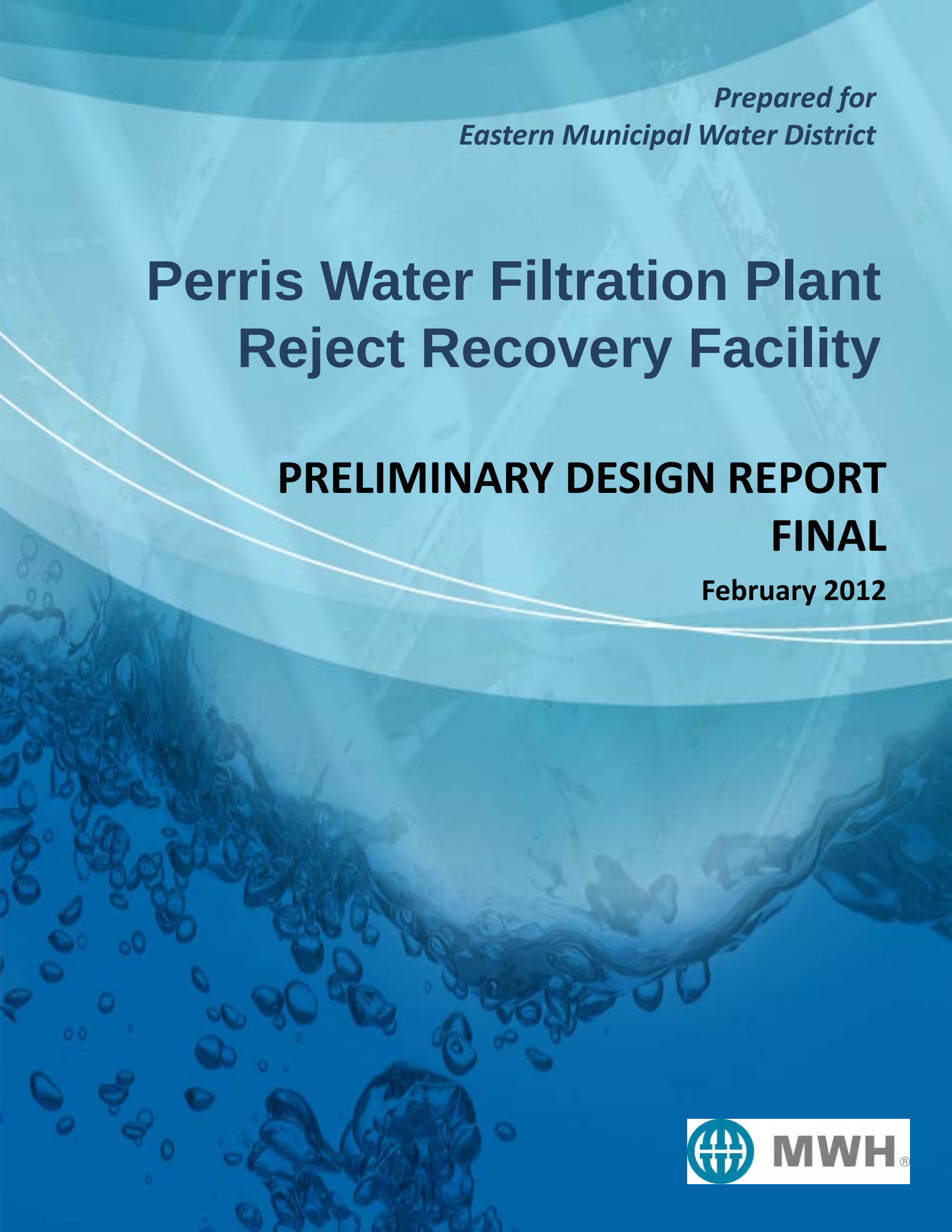

MWH®

TABLE OF CONTENTS

Executive Summary

		Page
PART I.	Overview	ES-1
PART II.	Treatment Process	ES-1
PART III.	Site Layout	ES-2
PART IV.	Control Strategy	ES-3

Chapter 1 General Overview

		Page
PART I.	Introduction	1-1
I.A.	Authorization	1-1
I.B.	Report Organization	1-1
PART II.	Existing Conditions and Preliminary Design Considerations	1-2
II.A.	Existing Facility	1-2
II.B.	Treatment Process	1-2
II.C.	Regulatory Requirements	1-2
PART III.	Design Criteria	1-3
III.A.	Reject Recovery Facility	1-3
PART IV.	System Descriptions	1-4

Chapter 2 Treatment Process

Page

PART I. General 2-1

I.A. Background 2-1

PART II. Existing Conditions and Design Considerations 2-2

II.A. Reject Recovery Facility Capacity 2-2

II.B. Reject Water Characteristics 2-3

II.C. Treated Water Quality Requirements 2-3

II.D. Existing Conditions 2-4

PART III. Design Criteria 2-5

III.A. RRF Equalization System 2-6

III.A.i RRF Equalization Tank 2-6

III.A.ii Reject Feed Pumps 2-8

III.B. RRF Membrane System 2-8

III.C. RRF Process Pumps 2-9

III.D. RRF Backpulse Tank 2-10

III.E. RRF Reject Pumps 2-11

III.F. RRF CIP System 2-11

III.G. RRF Hydrochloric Acid Facility 2-12

III.H. RRF Air Compressor System 2-13

III.I. RRF Air Scour Blower System 2-14

III.J. Water Quality Monitoring Instrumentation 2-14

III.K. Chemical Pumps 2-14

Chapter 3 Site Plan Development

Page

PART I. General 3-1
PART II. Site Selection 3-1
II.A. Utilities Research 3-2
II.B. Survey 3-3
II.C. Geotechnical Investigation 3-3
II.D. Soil Corrosivity Investigation 3-4
PART III. Design Criteria 3-4
III.A. Civil Site Development 3-4
III.B. Geotechnical 3-4
III.B.i Soil Liquefaction Assessment 3-5
III.B.ii Soil Corrosivity 3-5

Chapter 4 Facilities Requirements

Page

PART I. General 4-1
I.A. General Requirements 4-1
I.A.i Security 4-1
I.A.ii Building Entry and Egress 4-1
I.A.iii Aesthetics 4-1
I.A.iv Accessibility 4-1
I.A.v Noise Mitigation 4-2
I.A.vi Sewage Lift Station 4-2
I.A.vii Drainage 4-3
I.A.viii Canopy 4-3
I.A.ix Approved Materials List and Sole Source List 4-3
I.B. Membrane System Requirements 4-3
I.B.i Membrane Tank Piping 4-3
I.B.ii Equipment Hoist 4-4
I.B.iii RRF Membrane Tank Covers 4-4

I.B.iv Cassette Laydown Area 4-4
I.B.v RRF Chemical Analyzers 4-4
I.B.vi CIP and Backpulse Tanks Containment 4-5
I.C. Chemical Facilities....4-5
I.C.i Safety 4-5
I.C.ii Leak Detection System 4-5
I.D. Control System....4-6
I.E. Electrical Power....4-6
I.F. Future Provisions 4-7
I.F.i RRF UV System 4-7
PART II. Design Criteria 4-7
II.A. Pipe Routing....4-7
II.B. Hydraulic Profile....4-8

Chapter 5 Layout Options

Page

PART I. Introduction....5-1
PART II. Descriptions of Layout Options 5-1
II.A. Option 1 5-1
II.B. Option 2 5-2
II.C. Option 3 5-2
II.D. Option 4 5-3
II.E. Comparison of Options 5-4
II.F. Recommendation 5-6

Chapter 6 Implementation Plan

PART I. Introduction....6-1
PART II. Opinion of Probable Construction Cost (OPCC)....6-1
PART III. Project Schedule....6-2

Figures

		Following Page
Figure 1-1	General Site Plan	1-4
Figure 2-1	Screen Shot of Existing Reject Pump Operation	2-5
Figure 2-2	Process Flow Diagram	2-6
Figure 2-3	Mechanical Building Modifications Plan and Section	2-6
Figure 2-4	General Arrangement of ZW 500d Hi Cassette in Tank	2-5
Figure 3-1	Potential Sites for RRF	3-2
Figure 4-1	Proposed Location of RRF MCC	4-7
Figure 4-2	Preliminary Pipe Routing	4-8
Figure 4-3	RRF Hydraulic Profile	4-6
Figure 5-1	General Layout of Option 1	5-1
Figure 5-2	Site Plan of Option 1	5-1
Figure 5-3	General Layout of Option 2	5-2
Figure 5-4	Site Plan of Option 2	5-2
Figure 5-5	General Layout of Option 3	5-2
Figure 5-6	Site Plan of Option	5-2
Figure 5-7	General Layout of Option 4	5-3
Figure 5-8	Site Plan of Option 4	5-3
Figure 6-1	Current Project Schedule	6-2

Tables

		Page
Table 1-1	Treated Water Quality Requirements	1-3
Table 1-2	RRF Design Capacity	1-4
Table 2-1	Second Stage (RRF) Sizing Criteria	2-2
Table 2-2	RRF Design Capacity	2-2
Table 2-3	Composite Reject (Second Stage Feed) Water Quality Values for Colorado River Water and State Project Water	2-3
Table 2-4	Treated Water Quality Requirements	2-4
Table 2-5	Existing Reject Pumps	2-4
Table 2-6	RRF Equalization Tank Design Criteria	2-8
Table 2-7	RRF Feed Pumps Design Criteria	2-8
Table 2-8	RRF Membrane Facility Design Criteria	2-9
Table 2-9	RRF Process Pumps Design Criteria	2-10
Table 2-10	RRF Backpulse Tank Design Criteria	2-10
Table 2-11	RRF Reject Pumps Design Criteria	2-11
Table 2-12	RRF CIP Pumps Design Criteria	2-12
Table 2-13	RRF CIP Tank Design Criteria	2-12
Table 2-14	RRF Hydrochloric Acid (33%) Facility Design Criteria	2-13
Table 2-15	RRF Air Compressor Design Criteria	2-13
Table 2-16	RRF Air Scour Blower System Design Criteria	2-14
Table 2-17	RRF CIP – Sodium Hypochlorite (0.8%) Feed Pumps Design Criteria	2-15

Table 2-18	RRF CIP – Citric Acid (50%) Feed Pumps Design Criteria	2-15
Table 2-19	RRF CIP Neutralization – Sodium Bisulfite (38%) Feed Pumps Design Criteria	2-16
Table 2-20	RRF CIP Neutralization– Sodium Hydroxide (25%) Feed Pumps Design Criteria	2-16
Table 3-1	Site Evaluation Criteria and Weighting Factors	3-1
Table 3-2	2007 CBC Seismic Design Parameters	3-5
Table 4-1	Estimated Plumbed Flow to Existing Lift Station	4-2
Table 4-2	Key Features of Monorail and Traveling Bridge Cranes	4-4
Table 5-1	Comparison of RRF Layout Options	5-4
Table 5-2	Building, RRF and Canopy Footprints, and Amount of Fill Required	5-5

Appendices

Appendix ES-A	Meeting Minutes dated June 27, 2011; August 4, 2011; August 30, 2011; September 26, 2011 and October 11, 2011
Appendix ES-B	Value Engineering Report dated November 2011
Appendix 1-A	CDPH letter dated March 8, 2011
Appendix 2-A	Membrane Selection Technical Memorandum
Appendix 2-B	GE PID from Submittal #D-1.0 200515
Appendix 2-C	Air Scour Blowers Technical Memorandum
Appendix 3-A	Site Selection Meeting Notes
Appendix 3-B	Site Survey
Appendix 3-C	Geotechnical Report (Supplemental and May 2004 investigations) and Soil Corrosivity Report
Appendix 4-A	EMWD's Approved Materials List
Appendix 4-B	EMWD's Sole Source List
Appendix 4-C	MSDS of Hydrochloric Acid
Appendix 4-D	EMWD's Symbol & Color Legend
Appendix 6-A	Cost estimates classes defined by the Association for the Advancement of Cost Engineering

ACRONYMNS AND ABBREVIATIONS

AACE	Association for the Advancement of Cost Engineering
BP	Backpulse
CA OSHA	California Division of Occupational Safety and Health
CDPH	California Department of Public Health
CIP	Clean-in-Place
CRW	Colorado River Water
GE	GE Water & Process Technologies
gfd	gallon(s) per square foot per day
gpm	gallon(s) per minute
EMWD	Eastern Municipal Water District
MCC	Motor Control Centers
Mgd	million gallons per day
MIT	Membrane Integrity Test
MSDS	Material Safety Data Sheet
NFPA	National Fire Protection Code
NTU	Nephelometric turbidity units
OPCC	Opinion of Probable Construction Cost
PID	Process Instrumentation Diagram
PWFP	Perris Water Filtration Plant
RRF	Reject Recovery Facility
SCADA	Supervisory Control and Data Acquisition
SPW	State Project Water
UF	Ultra-Filtration
UV	Ultraviolet
VFD	variable frequency drives

EXECUTIVE SUMMARY

The draft Preliminary Design Report (PDR) of the Perris Water Filtration Plant (PWFP) Reject Recovery Facility (RRF) was submitted in June 2011, followed by a series of five meetings and a Value Engineering (VE) session to further refine the design concept. This Executive Summary presents the final design concept, which comments received during the meetings and VE session have been incorporated. The meeting minutes and the VE report are included as **Appendix ES-A and ES-B** respectively.

PART I. OVERVIEW

The PWFP is an existing water treatment facility with capacity of 20 million gallons per day (MGD) and is undergoing a capacity expansion to 24 MGD. The PWFP is currently equipped with GE-Zenon ZeeWeed® 500c Ultrafiltration (UF) submerged membranes operating at 96 to 98 percent recovery. PWFP treats Colorado River Water (CRW), State Project Water (SPW), or a blend of both. Coagulation with aluminum chlorohydrate (ACH) is periodically added when treating SPW.

The RRF is sized for 1.0 MGD capacity. It will treat the reject flow through GE Zeeweed 500d (high density) membrane system. The treated water will be returned to the headworks of the plant for reuse as a potable water source, as well as minimizing the amount of waste sent to the sewer.

PART II. TREATMENT PROCESS

The reject from the first-stage is equalized prior to being fed to the RRF (second stage) membrane system. The reject from the second stage membrane system will be sent to the sewer via the existing reject equalization tank. The treated water (permeate) from the second stage will be return to the existing PWFP headworks, downstream of the secondary screens.

Two membrane trains will be provided and each train will have a capacity of 0.5 mgd. Under normal average operating conditions, one train will be in operation and the speed of the RRF filtrate (permeate) pumps will be controlled by the water level in the RRF EQ tank. Under peak operating conditions, the second train will be brought into service manually by the operator. As with the existing first stage membrane system, the CIP system for the RRF will be initiated manually by the operators. Once initiated, the CIP cycle will be performed automatically. Similarly, the maintenance cleans will be initiated manually and performed automatically under normal operating conditions.

Citric acid will be used as primary acid for cleanings and hydrochloric acid will be used as a backup, should pH lower than 2.3 cannot be achieved using citric acid. New chemical feed pumps for sodium hypochlorite, citric acid, and sodium hydroxide will be provided at the existing chemical facilities to deliver chemicals to the RRF. A new hydrochloric acid facility, including a

bulk storage tank and two feed pumps, will be provided at the RRF. It should be noted sodium bisulfite will not be used for neutralization though provisions for future addition will be provided.

Two positive displacement blowers (in one duty and one standby configuration), will be provided for air scouring of the RRF membranes. Two compressors and receivers (in one duty and one standby configuration), will be provided to deliver air for the small pneumatic valve actuators as well as for membrane integrity testing. A Clean-In-Place (CIP) system will be provided to keep the membranes clean and to maintain membrane system performance.

The following recommendations from August 23-25, 2011 workshop will be incorporated in the final design of the RRF:

- Elimination of redundant programmable logic controller;
- Utilization of standard kilo-amperes interrupting capacity-rated motor control center;
- Utilization of common feed fuse disconnect for valves.

It was confirmed with Eastern Municipal Water District (EMWD) in December 2011 that citric acid will be used for membrane cleans with the hydrochloric acid as backup and sodium bisulfite will not be used for neutralization.

PART III. SITE LAYOUT

Option 2 of the four options was recommended in the PDR. The layout was revised during the meeting held on July 26, 2011, and the changes were as follows:

- The membrane tanks will be separate structures from the RRF building;
- The roof of the RRF building will be extended to cover the hydrochloric acid facility;
- A walkway will be provided along the west side of the membrane tanks for access to the valves;
- Two sets of stairs will be provided for access to the top of the RRF equalization and membrane tanks.

It was agreed that a catwalk will be provided at the top of the membrane tanks to provide operator access to permeate and air valves at the subsequent August 30, 2011 meeting.

Additional changes to the layout were made after the meeting held on October 11, 2011 as summarized below:

- An overflow CIP neutralization tank between the membrane tanks will be added to serve as the CIP neutralization/waste tank.
- A CIP waste pumps wetwell will be added to the west of the CIP neutralization tank. The footprint for the pre-engineered building will also be enlarged to the north.

PART IV. CONTROL STRATEGY

The control strategy of the treatment process is summarized as follows.

Under normal operating conditions, the reject will be sent to the RRF equalization tank via the first stage reject pumps. The submersible RRF feed pumps will send reject from the RRF equalization tank to the second stage (RRF) membrane system. The RRF filtrate will be sent to the headworks downstream of the secondary screens.. The reject from the second stage membrane system will be sent to the existing reject equalization tank for disposal.

When the CIP process is initiated, the CIP waste pumps will drain the membrane tanks to get the membranes ready for cleaning. The CIP feed pumps will deliver heated CIP water with chemicals to the membrane tanks. When the cleaning is completed, the waste CIP water will be drained by gravity to the CIP waste wetwell. The CIP waste pumps will send the CIP waste to the neutralization tank. Sodium hydroxide will then be added to the CIP waste for neutralization. The CIP waste pumps will be used to recirculate the CIP waste between the CIP waste pumps wetwell and the CIP neutralization tank. When the CIP waste is neutralized, the CIP waste pump will deliver the neutralized CIP waste to the existing equalization tank for disposal.

CHAPTER 1
GENERAL OVERVIEW

PART I. INTRODUCTION

This Preliminary Design Report (PDR) presents the results of preliminary engineering efforts for the design of the Perris Water Filtration Plant (PWFP) Reject Recovery Facility (RRF). This PDR serves as the basis for the detailed design and implementation of the PWFP RRF.

The record drawings from Phase I and Phase II Expansions, and the "Perris Water Filtration Plant Reject Treatment and Recovery Feasibility Report" dated July 2009 and prepared by CH2MHill provide the background for this project.

I.A. Authorization

MWH Americas, Inc. was retained to provide engineering services for the PWFP RRF in accordance with Agreement No. 67110 with the Eastern Municipal Water District (EMWD), dated January 12, 2010.

I.B. Report Organization

This PDR is organized in the following manner:

Chapter 1 – General Overview: This chapter provides project background, design requirements, and overview of the new RRF including general system descriptions.

Chapter 2 – Treatment Process: This chapter summarizes the selected treatment process, design criteria, and the redundancy requirements for the selected system.

Chapter 3 – Site Plan Development: This chapter presents the site selection process, describes the selected site, and summarizes the findings of the survey, geotechnical and soil corrosivity investigations.

Chapter 4 – Facilities Requirements: This chapter presents site specific facility requirements, including discussions on hydraulic profile, pipe routing, drain, and electrical power and control systems.

Chapter 5 – Site and Layout Alternatives: This chapter presents the site and layout alternatives for RRF, and the evaluation results and recommended alternative.

Chapter 6 – Project Implementation. This chapter presents the Class "4"Opinion of Probable Construction Cost (OPCC), prepared in accordance with the cost estimate classes defined by the Association for the Advancement of Cost Engineering [Class 4], set forth in the **Appendix 6-A**, as well as the preliminary construction schedule.

PART II. EXISTING CONDITIONS AND PRELIMINARY DESIGN CONSIDERATIONS

II.A. Existing Facility

The PWFP currently treats up to 20 mgd of water and is undergoing a capacity expansion to 24 mgd. The existing membrane facility has historically operated at 98 percent recovery, resulting in about 2% reject flow or about 0.4 mgd. The reject flow from the existing membrane facility is discharged to the sewer to be treated at the Perris Regional Water Reclamation Plant.

II.B. Treatment Process

The RRF will treat the reject flow through a new ultrafiltration (UF) membrane facility and return the treated water to the head of the plant for reuse as a potable water source. The reuse of the reject flows will minimize the amount of waste sent to the sewer on a daily basis.

II.C. Regulatory Requirements

The new RRF membrane system is designed to meet the treated water quality presented in **Table 1-1**:

Table 1-1 Treated Water Quality Requirements		
Parameter	Limit	Unit
Turbidity, Maximum	0.1[1]	NTU
Giardia Lamblia	>1.5	Log Reduction
Cryptosporidium	>1.5	Log Reduction

1. Minimum 95% success rate

These requirements exceed those needed to return water to the head of the plant, but may allow EMWD to pursue additional options for reuse of the reject water. EMWD has engaged in discussions with the California Department of Public Health (CDPH) regarding the possibility of sending the treated water from the second-stage to the UV disinfection system prior to being distributed in the potable water system. As indicated in the letter in **Appendix 1-A**, CDPH may "…consider the proposal in the future if a demonstration study is conducted and additional information is submitted for review by District office and the Water Treatment Committee. If EMWD would like to undertake a demonstration study, it must first submit a study protocol to the Department for review and approval." To do so, the second-stage will have to demonstrate a minimum of 4.0 log reduction for both *Giardia Lamblia* and *Cryptosporidium*. This will require supplemental disinfection with the existing UV system or possibly a future dedicated UV system at the RRF.

PART III. DESIGN CRITERIA

III.A. Reject Recovery Facility

The RRF consists of the following key components:

- RRF Equalization System and Feed Pumps
- Membrane System
- Process Pumps
- Backpulse Tank
- Reject Pumps
- CIP System
- Air Compressor System
- Blower System

- Treated Water Monitoring Instrumentation
- Chemical Systems

Due to the planned capacity expansion and potential changes in water quality, recovery for the PFWP is expected to decrease from 98% to 96%. For RRF sizing purposes, 96% recovery is assumed for the existing membrane system and 85% recovery for the RRF membrane system. **Table 1-2** summarizes the design capacity of the RRF. The design capacity of RRF is 1.0 mgd (as permeate), with space provided for additional cassettes as contingency.

Table 1-2
RRF Design Capacity

Conditions	(mgd)
Minimum	0.1
Average	0.5
Peak	1.0

PART IV. SYSTEM DESCRIPTIONS

Figure 1-1 presents the general arrangement of the proposed RRF together with future facilities, assuming ultimate PWFP capacity of 50 mgd. Reject from the existing membrane system is equalized prior to being fed to the RRF membrane system. The RRF reject is sent to the sewer via the existing reject equalization tank. Treated water (permeate) from the RRF is sent to the existing raw water pump station. New chemical pumps, except hydrochloric acid, will be added at the existing chemical facilities to deliver chemicals to the RRF (second-stage). A new hydrochloric acid facility including a bulk storage tank and two feed pumps will be provided. A blower system, including two positive displacement blowers, will be provided for air scour of the membranes. An air compressor system, including two compressors and receivers, will be provided for the membrane integrity system. A Clean-In-Place (CIP) system will be provided for membrane cleaning and to maintain membrane system performance.

Plot Date: 08-JUN-2011 14:19
User: Brandon J Shin
File: EMWD_1-1.dgn Model: Layout1 ColorTable: bw.ctb DesignScript: MWH_Iplot_PenTable_V89.pen PlotScale: 0.083333:1

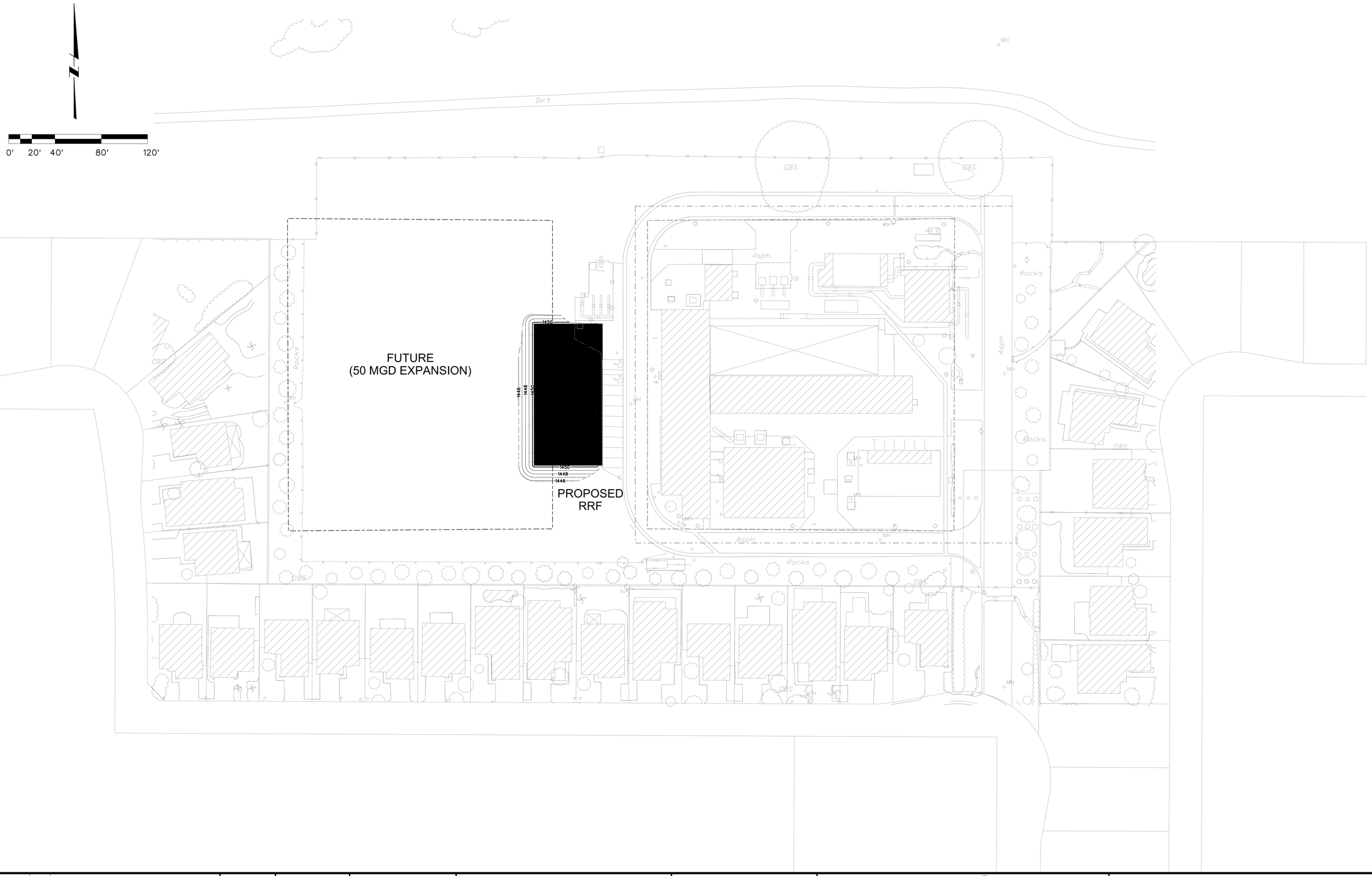

REV	DATE	BY	DESCRIPTION

SCALE
1" = 40'

WARNING
0 ½ 1
IF THIS BAR DOES NOT MEASURE 1" THEN DRAWING IS NOT TO SCALE

DESIGNED G BEHNKE
DRAWN G BEHNKE
CHECKED

NOT FOR CONSTRUCTION
This document is an interim document and not suitable for construction. As an interim document, it may contain data that is potentially inaccurate or incomplete and is not to be relied upon without the express written consent of the preparer.

MWH®

EASTERN MUNICIPAL WATER DISTRICT
SINCE 1950

PERRIS WATER FILTRATION PLANT

GENERAL SITE PLAN

FIGURE
1-1
1008058

CHAPTER 2
TREATMENT PROCESS

PART I. GENERAL

This chapter describes and summarizes the selected treatment process, design criteria, and the redundancy requirements for the selected system. The sizing criteria presented in this chapter were based on GE's submittal #D-1.0 200515.

I.A. Background

PWFP is a membrane filtration water plant that can treat Colorado River Water (CRW) or State Project Water (SPW) or a blend of the two supplies. PWFP currently has a rated capacity of 20 mgd and is undergoing a plant expansion to 24 mgd. PWFP is equipped with the GE-Zenon Water & Process Technologies (GE) ZeeWeed® 500c UF system, and typically treats 5 to 6 mgd during the months of November through March and about 14 mgd during the remainder of the year, with an overall annual average production of just over 10 mgd. PWFP normally operates at 98% recovery, but may drop to 96% recovery when feeding coagulant or at peak flowrates. The product water from the 500c UF system is disinfected by ultraviolet (UV) prior to being distributed to EMWD's customers. Currently, the reject water from the 500c UF system is discharged to sewer and conveyed to the Perris Regional Water Reclamation Facilities for treatment prior to disposal.

The proposed RRF is designed to intercept the reject water, treat it on-site, and return it to the head of the PWFP. As part of the membrane system procurement process, EMWD pre-qualified five membrane manufacturers/suppliers and issued a Request for Proposal (RFP) to these pre-qualified manufacturers/suppliers. The Membrane Selection Technical Memorandum summarizes this information, discussions during review workshops, and recommendations, and is appended to this report (**Appendix 2-A**). GE Zeeweed 500d membrane system was selected and pre-negotiated for the RRF.

Throughout the remainder of this Report, the existing GE ZeeWeed® 500c UF system is referred to as the "first-stage" and the RRF GE Zeeweed 500d membrane system is referred to interchangeably as the "second-stage" or "RRF".

PART II. EXISTING CONDITIONS AND DESIGN CONSIDERATIONS

II.A. Reject Recovery Facility Capacity

Table 2-1 presents the sizing analysis for the RRF. 96% recovery is assumed for first-stage and 85% recovery for the second-stage. Currently rated at 20 mgd, PWFP is currently undergoing an expansion to 24 mgd and EMWD indicated that an expansion to 28 mgd is possible within the next 5 years. A 1.0 mgd second-stage will be sufficient to treat reject flows when PWFP is expanded to 28 mgd. As there is little precedent for sizing reject facilities, and no pilot studies were conducted, EMWD requested a contingency be provided. For these reasons, space for additional cassette will be provided for the RRF (second-stage).

Table 2-1
Second Stage (RRF) Sizing Criteria

Conditions	Plant Influent	Existing First-Stage Capacity	Required Second-Stage (RRF) Capacity
	(mgd)	(mgd)	(mgd)
Current (2010-11)		**96% R**	**85% R**
- Winter (Nov-Mar)	5.85	5.62	0.20
- Summer	14.48	13.90	0.49
- Rated Capacity	20.83	20.00	0.71
Future	25.00	24.00	0.85
	29.17	28.00	0.99
Ultimate	52.08	50.00	1.77

Under winter flow conditions, with the first-stage operating at 98% recovery and the second stage operating at 85% recovery, the minimum capacity condition for the RRF will be 0.10 mgd. **Table 2-2** summarizes the design capacity range for the RRF.

Table 2-2
RRF Design Capacity

Conditions	(mgd)
Minimum	0.1
Average	0.5
Peak	1.0

To accommodate all flow conditions as shown in **Table 2-2**, two membrane trains will be provided (each sized for up to 0.60 mgd). One train will be in operation during minimum and average flow conditions and both trains will be in operation during peak flow conditions. The second-stage will be on standby mode and will only operate when the RRF equalization tank reaches a pre-set high level during minimum flow conditions (November – March).

II.B. Reject Water Characteristics

Since PWFP can treat CRW, SPW or a blend of both, the RRF is designed to treat reject streams derived from either source water. Water quality information for both CRW and SPW can be found in **Appendix 2-A**. EMWD performed reject characterization in 2009 and the composite 1st stage reject (2nd stage feed) water quality values are summarized in **Table 2-3**.

Table 2-3
Composite Reject (Second Stage Feed) Water Quality Values for Colorado River Water and State Project Water

FEED WATER CONSTITUENT	UNITS	MINIMUM	MEDIAN	MAXIMUM
GENERAL				
pH	pH units	5.15	7.54	8.73
Temperature	°C	8.0	17.6	27.0
Total Alkalinity	mg/L ($CaCO_3$)	65.0	148.0	180.0
Total Dissolved Solids	mg/L	230	638	650
Total Organic Carbon	mg/L	7.0	22.2	67.0
Total Suspended Solids	mg/L	7	212	615
Turbidity	NTU	24.2	100	300
UVT at 254 nm	%	75.9	83.1	88.3

Source: CH2M Hill, 2009. Perris Water Filtration Plant and Hemet Water Filtration Plant Reject Characterization.

II.C. Treated Water Quality Requirements

With the treated water of RRF returned to the head of PWFP, the RRF membrane system is designed to meet the following treated water quality requirements as presented in **Table 2-4**.

Table 2-4 Treated Water Quality Requirements		
Parameter	**Limit**	**Unit**
Turbidity, Maximum	0.1[1]	NTU
Giardia Lamblia	>1.5	Log Reduction
Cryptosporidium	>1.5	Log Reduction

1. Minimum 95% success rate

II.D. Existing Conditions

Two existing reject pumps deliver reject water from the first stage to the existing reject equalization tank and subsequently to the sewer system. **Table 2-5** presents the design criteria for the existing reject pumps.

Table 2-5 Existing Reject Pumps		
Parameter	**Units**	**Value**
Number of reject pumps	-	2
Configuration	-	1 duty 1 standby
Make	-	Primeline PL 250
Size	-	8x8-13
Rated Capacity, each	gpm	1,100
Design TDH	ft	50
Rated Power, each	hp	21.7

Each first-stage membrane tank has a 12-inch reject line that discharges into a common 12-inch suction for the reject pumps. The duty reject pump discharges into a 10-inch line to the existing reject equalization tank. The first stage drain and neutralized CIP water are also delivered to the reject equalization tank via this 10-inch line.

As discussed with EMWD Operations, regardless of plant flowrate, the maximum average flow for the existing duty reject pump is 1,836 gpm and the average pumping time is 2.39 minutes, with a total average flow of 4,400 gallons per reject. Thus, the existing pumps are operating further out on their pumping curve than designed, due to lower TDH than anticipated. **Figure 2-1** below is a screen-capture from the PWFP SCADA system of typical reject pump operation. As shown, the rejects are not equally spaced. Reject is initiated as needed and not on a prescribed schedule. Both the frequency and volume of the reject flows determine the sizing of the equalization tank needed for the proposed RRF.

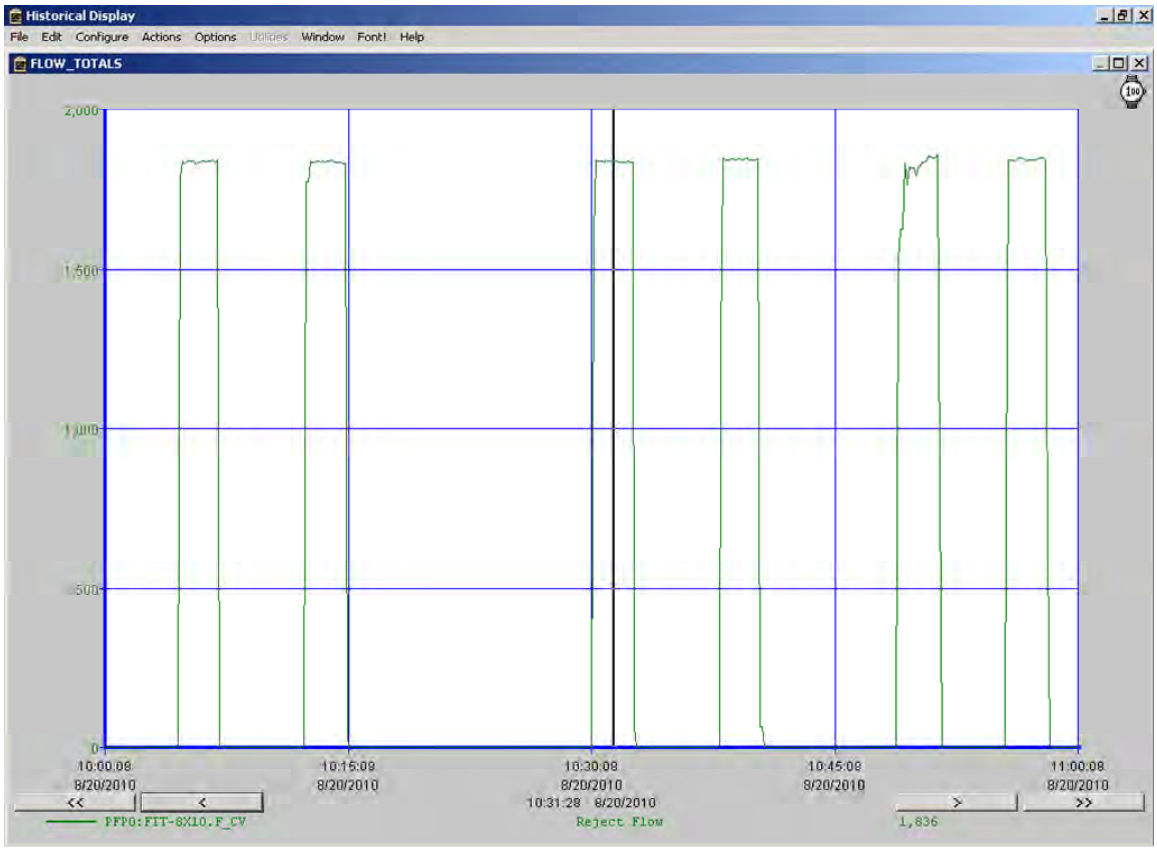

Figure 2-1 Screen Shot of Existing Reject Pump Operation

PART III. DESIGN CRITERIA

Figure 2-2 presents the proposed modifications to the general process flow diagram of PWFP, including both first and second stages. As shown, reject from the first-stage is equalized prior to being fed to the second stage membrane system. The second-stage (RRF) reject is sent to the sewer via the existing reject equalization tank. Treated water (permeate) from the second-stage (RRF) is sent to the existing raw water pump station. New chemical pumps, except hydrochloric acid, will be added at the existing chemical facilities to deliver chemicals to the RRF. A new hydrochloric acid facility, including a bulk storage tank and two feed pumps, will be provided at the RRF. A blower system, including two positive displacement blowers, will be provided for air scour of the RRF membranes. An air compressor system, including two compressors and receivers, will be

provided for membrane integrity system. A Clean-In-Place (CIP) system will be provided to keep the membranes clean and to maintain membrane system performance.

The following paragraphs present the design criteria for the following treatment process units:

- RRF Equalization System
- Membrane System
- Process Pumps
- Backpulse Tank
- Reject Pumps
- CIP System
- Air Compressor System
- Blower System
- Treated Water Monitoring Instrumentation
- Chemical Pumps

III.A. RRF Equalization System

The purpose of the RRF equalization system is to equalize non-uniform reject flows from the first stage and deliver constant flow to the RRF. The RRF equalization system consists of a RRF equalization tank and two submersible RRF membrane feed pumps.

To intercept the first stage reject, a new 10-inch discharge header will be connected to the existing first stage reject pumps. As shown in **Figure 2-3**, the new 10-inch pipe will be connected to both the new RRF equalization tank and the existing reject equalization tank, and provides EMWD operational flexibility and redundancy during start-up and operation, allowing the first stage reject to be sent to the existing equalization tank and to the sewer system, if needed. This will also avoid any possible cross-connection to the first stage drain and neutralized CIP water, as well as to any return waste streams from the second stage.

III.A.i RRF Equalization Tank

Design considerations of the RRF Equalization Tank include:

- Net influent and effluent flows

Plot Date: 08-JUN-2011 16:02
User: Brandon J Shin
PlotScale: 0.083333:1
DesignScript: MWH_Iplot_PenTable_V89.pen
ColorTable: bw.ctb
Model: LAYOUT1
File: EMWD_FIG2-2.dgn

25% SODIUM HYDROXIDE
NEW SODIUM HYDROXIDE PUMPS (1 DUTY, 1 STANDBY)
TO RRF CIP NEUTRALIZATION
TO RRF CIP NEUTRALIZATION
NEW SODIUM BISULFITE PUMPS (1 DUTY, 1 STANDBY)
38% SODIUM BISULFITE STORAGE TANK
NaOCL CIP TANK
CITRIC ACID CIP TANK
CIP PUMPS
50% CITRIC ACID STORAGE TANK
FERRIC CHLORIDE STORAGE TANK
FERRIC CHLORIDE FEED PUMPS (1 DUTY, 1 STANDBY)
NEW CITRIC ACID PUMPS (1 DUTY, 1 STANDBY)
SECONDARY SCREENS (1 STANDBY)
INSTRUMENT AIR
PLANT WATER
BLOWERS (3 NEW DUTY)
INLET CHANNEL
EXISTING INLET CHANNEL
MEMBRANE TANKS
NEUTRALIZATION TANK
MEMBRANE TANKS
TRAIN 6
TRAIN 5
TRAIN 4
(MEMBRANES NOT SHOWN FOR TRAIN 4 AND 5 FOR CLARITY)
BACK PULSE TANK
PERRIS II WELL (WOO55)
BACK PULSE PUMPS
INDUSTRIAL WATER SUMP AND PUMPS
PERMEATE PUMPS (3 NEW DUTY, 1 NEW STANDBY)
REJECT WATER (3 NEW DUTY)
TO EMWD SEWER
UV DISINFECTION (2 DUTY, 1 STANDBY)
FINISHED WATER PUMP STATION (2 NEW PUMPS, 4 RELOCATED PUMPS)
CLEARWELL
EM-4a
EM-4b
SOUTH BARREL OF COLORADO RIVER AQUEDUCT PERRIS VALLEY SIPHON
EXISTING MWD FACILITIES
EXISTING OLD P/S STRUCTURE
RAW WATER FEED PUMPS
REMOVABLE PRIMARY SCREEN
ON-SITE NaOCl GENERATION
TO ATMOSPHERE
0.8% NaOCl DAY TANK
PERMEATE VACUUM PUMPS
WELL BLOWOFF
STATE PROJECT WATER PIPELINE
PRETREATMENT MIXER
PRETREATMENT BASIN
TO RRF CIP (2 DUTY, 1 STANDBY)
NEW SODIUM HYPOCHLORITE PUMPS
MIXER
PRV
EMWD SYSTEM
FLUORIDE STORAGE TANK
FLUORIDE FEED PUMPS (1 DUTY, 1 STANDBY)
GRAVITY DRAINS
AQUEOUS AMMONIUM
CHEMICAL DOSING/ DISINFECTION
CHEMICAL AND DOMESTIC WASTE LIFT STATION
OFFSPEC
RRF BACKPULSE TANK
PROCESS/PERMEATE PUMPS (2 DUTY NEW, 0 STANDBY)
MIT AIR FROM RRF COMPRESSOR
RRF EQ TANK
RRF MEMBRANE TANKS (2 TOTAL)
RRF REJECT PUMP (2 NEW; 1 DUTY, 1 STANDBY)
RRF FEED PUMPS (2 SUBMERSIBLE; 1 DUTY, 1 STANDBY)
AIR SCOUR BLOWERS
SODIUM HYDROXIDE
SODIUM BISULFITE
CIP NEUTRALIZATION
RRF CIP PUMPS (1 DUTY, 1 STANDBY)
RRF CIP TANK
NEUTRALIZED CIP WATER
33% HYDROCHLORIC ACID TANK
HYDROCHLORIC ACID FEED PUMPS (1 DUTY, 1 STANDBY)
HYDROCHLORIC ACID (RECOVERY CLEAN)
SODIUM HYPOCHLORITE (RECOVERY CLEAN)
SODIUM HYPOCHLORITE (MAINTENANCE CLEAN)
CITRIC ACID (MC)

REV	DATE	BY	DESCRIPTION

SCALE: NO SCALE

WARNING: 0 ½ 1 — IF THIS BAR DOES NOT MEASURE 1" THEN DRAWING IS NOT TO SCALE

DESIGNED
DRAWN
CHECKED

NOT FOR CONSTRUCTION
This document is an interim document and not suitable for construction. As an interim document, it may contain data that is potentially inaccurate or incomplete and is not to be relied upon without the express written consent of the preparer.

MWH®

EASTERN MUNICIPAL WATER DISTRICT SINCE 1950

PERRIS WATER FILTRATION PLANT

PROCESS FLOW DIAGRAM

FIGURE 2-2

1008058

Plot Date: 08-JUN-2011 16:02
User: Brandon J Shin
PlotScale: 0.083333:1
DesignScript: MWH_Iplot_PenTable_V89.pen
ColorTable: bw.ctb
Model: LAYOUT1
File: EMWD_FIG2-3.dgn

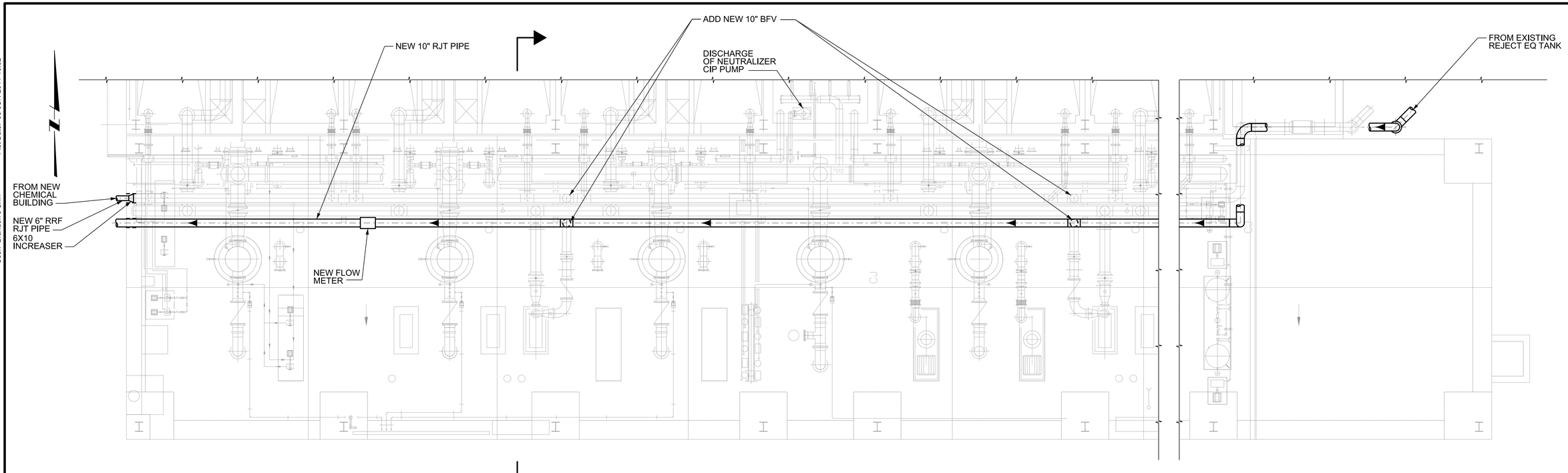

PLAN

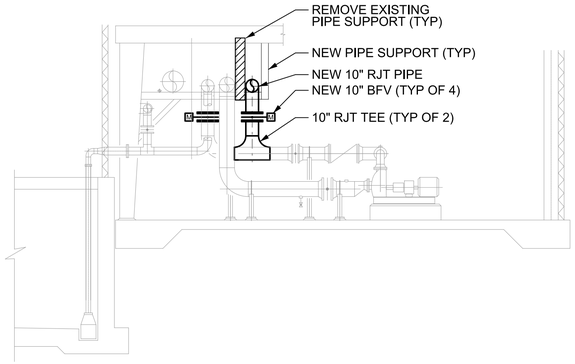

SECTION A -

REV	DATE	BY	DESCRIPTION

SCALE: 3/16" = 1'-0"

WARNING: 0 ½ 1 — IF THIS BAR DOES NOT MEASURE 1" THEN DRAWING IS NOT TO SCALE

DESIGNED

DRAWN

CHECKED

NOT FOR CONSTRUCTION
This document is an interim document and not suitable for construction. As an interim document, it may contain data that is potentially inaccurate or incomplete and is not to be relied upon without the express written consent of the preparer.

MWH®

EASTERN MUNICIPAL WATER DISTRICT SINCE 1950

PERRIS WATER FILTRATION PLANT

MECHANICAL BUILDING
MODIFICATIONS PLAN AND SECTION

FIGURE 2-3

1008058

- Net flow accumulation when one membrane is out of service at design influent flow
- Instantaneous flows of the second stage membrane system, taking into account the scheduled daily downtime and permeate volume used for backpulsing and filling the CIP tank for maintenance cleans.

A net flow accumulation happens when one membrane train is out of service at design influent flow of 1.0 mgd. The RRF equalization tank will be sized to equalize one reject volume (i.e.,. 4,400 gallons) and the net flow accumulation volume.

The design influent flow to the RRF equalization tank is 694 gpm (i.e.,. 1 mgd) and the design effluent flow is 439 gpm (i.e.,. capacity of one train, based on GE's process design), resulting in an accumulation rate of 256 gpm.

The longest schedule downtime events are the maintenance cleans and the total downtime from maintenance cleans is approximately 46 minutes (based on GE's standard actuation times). The total design scheduled downtime event is therefore 49 minutes, including the downtime from maintenance cleans and the additional three minutes actuation time from the electric actuators (20 seconds actuation times assumed, instead of 3-5 seconds for pneumatic. actuation times). The net flow accumulation volume is therefore approximately 12,600 gallons (256 gpm accumulation rate multiplied by 49 minutes of total design scheduled downtime). The minimum RRF equalization volume is therefore approximately 17,000 gallon. An additional 1,000 gallons will be provided as contingency volume in case the electric actuation time is more than the assumed 20 seconds. Therefore, 18,000 gallons of RRF equalization volume will be sufficient to equalize flows to the second stage. **Table 2-6** presents the design criteria of the concrete RRF Equalization Tank. The length and width of the RRF Equalization Tank varies according to the layout of the facility, as discussed later in this chapter.

Table 2-6 RRF Equalization Tank Design Criteria		
Item	**Units**	**Value**
Capacity	Gallons	18,000
SWD	ft	8.5

III.A.ii Reject Feed Pumps

Two submersible RRF Feed Pumps will be provided to send reject from the RRF Equalization Tank to the second stage (RRF) membrane system. Submersible pumps are selected to help minimize noise, as the equalization basin will be outside the RRF building. The feed flow will be metered as shown on the P&ID in **Appendix 2-B**. **Table 2-7** presents the design criteria for the RRF Feed Pumps.

Table 2-7 RRF Feed Pumps Design Criteria		
Item	**Units**	**Value**
Number	No.	2
Duty	No.	2
Standby	No.	0
Capacity, each	gpm	546
TDH	ft	13
Type	-	Submersible
Motor		
Horsepower	HP	5
Voltage	VAC	460
Phase	-	3
RPM	rpm	1,200
Drive	-	Variable Frequency

III.B. RRF Membrane System

GE Zeeweed 500d (High Intensity) membrane system will be provided for this project. The High Intensity design is slightly different from the configuration of the first stage membranes, and offers the following features:

- Compact design with minimal footprint
- Smaller tank volume
- No pipe penetration through the membrane tank covers, as all piping exits through the sides of the membrane tank

Figure 2-4 presents the general arrangement of the Zeeweed 500d (high intensity) cassettes in a tank (note: 4 cassettes are shown in this general drawing, but each tank will be designed for only 3 cassettes). Feed water and CIP enters/leaves the membrane tanks through the sump at the bottom of the tank. Permeate and reject piping penetrate through the sides of the tanks.

To accommodate all flow conditions as shown in **Table 2-2**, two cassettes will be initially installed in each train (tank) with installed design capacity of 1.0 mgd and instantaneous capacity of 1.16 mgd. Space for a third cassette will be provided in each train (tank) to accommodate future addition of membrane modules, if needed. **Table 2-8** presents the design criteria for the membrane system.

Table 2-8
RRF Membrane Facility Design Criteria

Item	Units	Value
Membrane Type	-	Zenon ZeeWeed
Cassette Type	-	500d (High Intensity)
Number of Cassettes per Tank	-	2
Number of Installed Modules per Cassette	-	60
Maximum Number of Modules per Cassette	-	64
Number of Spare Modules per Cassette	-	4
Membrane Area per module	sq ft	340
Installed Membrane Area per Cassette	sq ft	20,400
Installed Membrane Area per Tank	sq ft	40,800
Design Flux Rate		
Net	gfd	12.25
Instantaneous	gfd	14.25
RRF Membrane Trains		
Number	No.	2
Total number of tanks	No.	2
RRF Membrane Tank Dimensions, each		
SWD	ft	10
Width	ft	8
Length	ft	18

III.C. RRF Process Pumps

The process pumps will function as both permeate and backpulse pumps. Two process pumps will be provided, one dedicated to each train (i.e., 2-duty and no standby). In permeate mode, the process pump delivers permeate to the existing raw water pump station. In backpulse mode, the process pump delivers the backpulse water from the

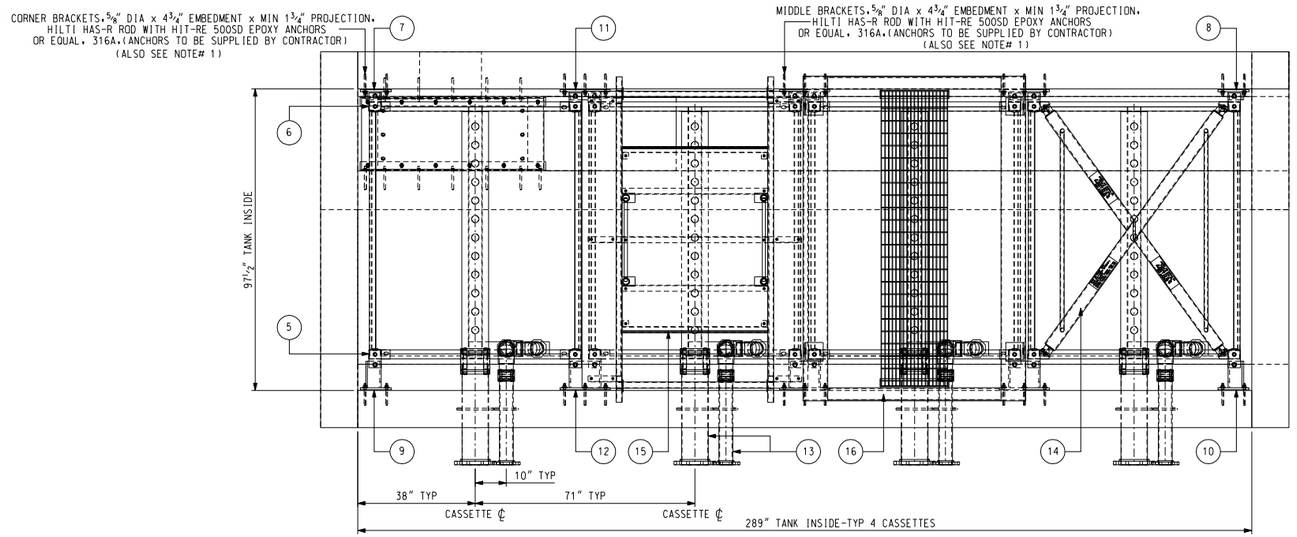

PLAN VIEW

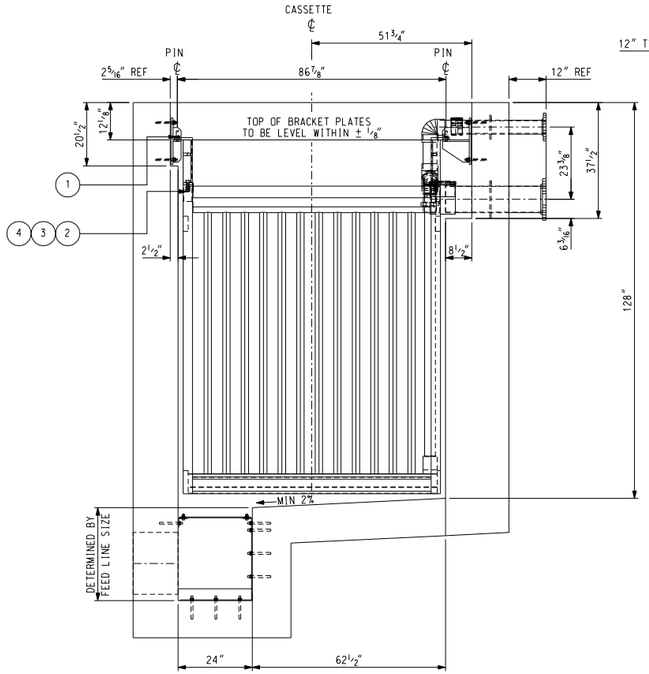

SIDE VIEW

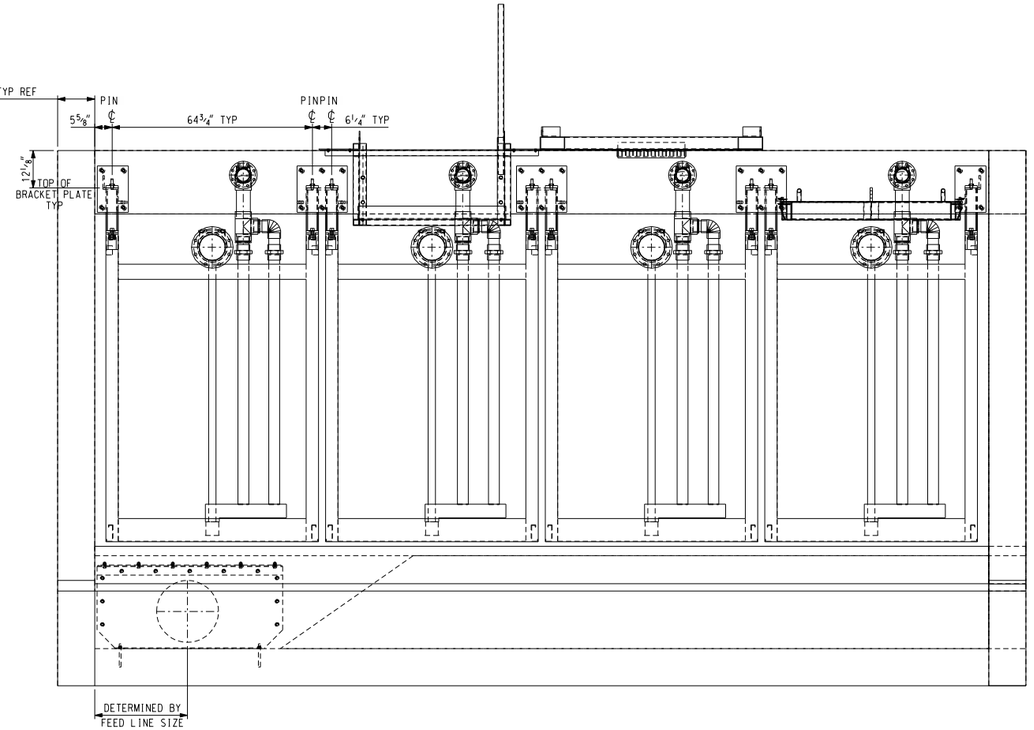

FRONT VIEW

BILL OF MATERIALS				
ITEM NO.	QTY	PART NO.	DESCRIPTION	SPEC./DWG#.
1		BaaN# 1030765	DOUBLE SPLIT SHAFT COLLAR 3/4" BORE x 1 1/2" O.D. x 1/2" WIDTH	301/302 SS
2		BaaN# 1031632	NUT, HEX HEAD 3/4 - 10UNC	316L SS
3		BaaN# 1026401	WASHER, LOCKING, SP 3/4" NOM	2343 SS
4		BaaN# 1035177	HEX HEAD BOLT 3/4 -10UNC x 3" LG	316 SH2 ASTM F593F
5		BaaN# 3005107	HANGER 500d HI CASSETTE	3005100-SA-06 REV. A
6		BaaN# 3005108	HANGER 500d HI CASSETTE	3005100-SA-06 REV. A
7		BaaN# 3005101	LEFT CORNER BRACKET 500d HI,BACK WALL	3005100-SA-01 REV. A
8		BaaN# 3005102	RIGHT CORNER BRACKET 500d HI, BACK WALL	3005100-SA-01 REV. A
9		BaaN# 3005103	LEFT CORNER BRACKET 500d HI, FRONT WALL	3005100-SA-02 REV. A
10		BaaN# 3005104	RIGHT CORNER BRACKET 500d HI, FRONT WALL	3005100-SA-02 REV. A
11		BaaN# 3005105	MIDDLE BRACKET 500d HI, BACK WALL	3005100-SA-03 REV. A
12		BaaN# 3005106	MIDDLE BRACKET 500d HI, FRONT WALL	3005100-SA-04 REV. A
13		BaaN# 3005003	EMBEDDED PARTS 500d HI	3005000-SA-02 REV. A
14		BaaN# 3005006	LIFTING MODULE 500d CASETTE	3005000-SA-05 REV. A
15		BaaN# 3005004	ACCESS PLATFORM 500d HI	3005000-SA-03 REV. A
16		BaaN# 3005005	CASSETTE BASE 500d HI	3005000-SA-04 REV. A

NOTES

1. FOR INTERIOR TANK WALLS THAT HAVE BRACKETS ON BOTH SIDES, IF THE ANCHOR EMBEDDMENT PLUS TWO TIMES THE ANCHOR DIAMETER IS HIGHER THEN HALF OF TANK WALL THICKNESS,THEN THRU-WALL THREADED RODS, 316A, ASTM F593 MUST BE USED.

NOTES (FOR DESIGNER ONLY)

1. ITEM# 16 IS DESIGNED ON THE ASSUMPTION THAT COMPOSOLITE PANELS, SERIES 525, WITH SL FINE GRIT NON-SKID SURFACE, 3 1/8" THK x 97"L x 23 7/8" NOM ARE USED: IF DIFFERENT TYPE OF PANEL IS USED, STANDARD DRAWING NEEDS CUSTOMIZATION.
2. FEED LINE AND BAFFLE PLATE, SIZE & LOCATION ARE GENERIC. TO BE ADJUSTED AS PER PROJECT SPECIFIC REQUIREMENTS.
3. TYPICAL GA NOTE TO BE ADDED.

FIGURE 2-4 GENERAL ARRANGEMENT OF ZW 500D HI CASSETTEE IN TANK

REV	DESCRIPTION	ECO	DWN	APVD	DATE	CHKD
B	ITEMS# 5 & 6, PART# AND DWG# CHANGED	100	MD	DEW	01APR11	GB
A	ISSUED AS CONTROLLED DOCUMENT		MD	DEW	20OCT10	GB

TOLERANCES UNLESS NOTED
DECIMALS .X ± 0.03, .XX ± 0.015, .XXX ± 0.01
ANGLES ±0.5
FRAC ± 1/8
DIMENSIONS IN INCHES DO NOT SCALE
THIRD ANGLE

DRAWN BY	MD	DATE 28JUN10
CHECKED BY	GB	DATE 20OCT10
APPROVED BY	DEW	DATE 20OCT10
APPROVED BY		DATE

GE Water & Process Technologies
GLOBAL HEADQUARTERS : TREVOSE, PA USA +1-215-355-3300 WWW.GEWATER.COM

THIS DRAWING, THE DESIGN AND THE PATENTS IT COVERS, IS THE PROPERTY OF GENERAL ELECTRIC COMPANY AND ITS AFFILIATES AND THE INFORMATION CONTAINED HEREIN IS PROPRIETARY INFORMATION WHICH IS NOT TO BE DISCLOSED TO ANYONE WITHOUT PRIOR WRITTEN CONSENT OF SAID COMPANY. THIS DRAWING IS TO BE USED EXCLUSIVELY FOR THE PURPOSES EXPRESSLY AUTHORIZED BY GENERAL ELECTRIC COMPANY AND ITS AFFILIATES THROUGH ITS OFFICERS AND QUALIFIED REPRESENTATIVES AND FOR NO OTHER PURPOSE. NEITHER THIS DRAWING, NOR ANY PORTION THEREOF, SHALL BE REPRODUCED WITHOUT THE PRIOR WRITTEN CONSENT OF SAID COMPANY, AND ANY SUCH REPRODUCTION SHALL BEAR THIS NOTICE.

CLIENT/JOB	ZW 500D HI, CONCRETE SDS = 0.00 TO 1.00
TITLE	GENERAL ARRANGEMENT ZW500D HI CASSETTE IN CONC T
FILE	MICROSTATION
MATERIAL	0.00 TO 1.00
SIZE	D
DRAWING NO.	3005100-PG-05
REV	B
PROJECT	3005100
SCALE	1:24
SHEET	1OF1

P/N 1161662-RHP01

backpulse tank to the membrane tanks. **Table 2-9** presents the design criteria for the RRF Process Pumps.

Table 2-9
RRF Process Pumps Design Criteria

RRF Process Pumps		
Item	**Units**	**Value**
Number	No.	2
Duty	No.	2
Standby	No.	0
Permeate Mode		
Capacity, each	gpm	484
TDH	ft	55
Type	-	Centrifugal End suction, top discharge
Backpulse Mode		
Capacity, each	gpm	868
TDH	ft	45
Type	-	Centrifugal End suction, top discharge
Motor		
Horsepower	HP	20
Voltage	VAC	460
Phase	-	3
RPM	rpm	1,200

III.D. RRF Backpulse Tank

The backpulse tank will receive second stage common permeate and potable water from the plant water service. Sodium hypochlorite will be added once a day to the backpulse tank for maintenance cleaning. The flow rate will be set by the maintenance clean requirement and the concentration delivered to the tank will be adjusted through a timer (default timer value is 20 seconds). **Table 2-10** summarizes the design criteria for the backpulse tank.

Table 2-10
RRF Backpulse Tank Design Criteria

Item	**Units**	**Value**
Number	No.	1
Construction	-	Polyethylene
Capacity	gallons	2,000
Diameter	ft	7'-2"
Height	ft	8'-4"

III.E. RRF Reject Pumps

Two RRF Reject Pumps will be provided to deliver reject from the second stage membrane system to the existing reject equalization tank. Piping will be installed to connect to the existing 10-inch line in the first stage mechanical building. Each reject pump is dedicated to its train, so the reject pumps will operate in a 2-duty, no standby configuration. **Table 2-11** presents the design criteria for the RRF Reject Pumps.

Table 2-11
RRF Reject Pumps Design Criteria

Item	Units	Value
Number	No.	2
Duty	No.	2
Standby	No.	0
Capacity, each	gpm	70
TDH	ft	40
Type	-	Centrifugal End suction, top discharge
Motor		
Horsepower	HP	2
Voltage	VAC	460
Phase	-	3
RPM	rpm	1,800

III.F. RRF CIP System

The CIP system consists of two CIP pumps (one duty and one standby) and a CIP tank. The duty CIP pump delivers heated water from the CIP tank to the membrane tanks. CIP chemicals (sodium hypochlorite, citric acid, and hydrochloric acid) are added to the heated water at the discharge of the CIP pumps. The duty CIP pump will also deliver the cleaning water from the membrane tank drain to the CIP tank for neutralization. Sodium bisulfite and sodium hydroxide will be added to neutralize the CIP. Once neutralized, the duty CIP pump will pump the neutralized CIP water to the existing reject equalization tank in a common pipe with the reject water. **Table 2-12** presents the design criteria for the RRF CIP pumps.

Table 2-12 RRF CIP Pumps Design Criteria		
Item	**Units**	**Value**
Number	No.	2
Duty	No.	1
Standby	No.	1
Capacity	gpm	444
TDH	ft	40
Type	-	
Motor		
Horsepower	HP	10
Voltage	VAC	460
Phase	-	3
RPM	rpm	1,800

Table 2-13 presents the design criteria for the CIP tank and electric heater. An independent support will be provided for the electric heater.

Table 2-13 RRF CIP Tank Design Criteria		
Item	**Units**	**Value**
Number	No.	1
Construction	-	Polyethylene
Capacity	gallons	9,600
Diameter	ft	11'-11"
Height	ft	14'-5"
Electric Heater		
Number	No.	1
Power	KW	130

III.G. RRF Hydrochloric Acid Facility

A new hydrochloric acid facility will be provided as part of this project, and consists of one bulk storage tank and two feed pumps. Approximately 6.9 gallons of hydrochloric acid will be used to suppress pH per citric maintenance clean or recovery clean (approximately 725 gallons per year). Bulk storage tank will be provided in lieu of totes.

It was confirmed with Brenntag (EMWD's current chemical supplier) that they provide mini-bulk delivery for 33% hydrochloric acid. One 600-gallon FRP/high density cross-linked polyethylene bulk storage tank with vent will be provided. The facility will be covered and contain the volume of the bulk storage tank. Two peristaltic pumps will be provided as hydrochloric acid feed pumps. **Table 2-14** presents the design criteria of the hydrochloric acid facility.

Table 2-14 RRF - Hydrochloric Acid (33%) Facility Design Criteria		
Item	**Units**	**Value**
Storage Tank		
Number	No.	1
Capacity	gallons	600
Diameter	ft	4
Height	ft	7
Bulk Storage Time	months	8.9
Feed Pumps		
Number	No.	2
Duty	No.	1
Standby	No.	1
Capacity	gph	28
Type	-	Peristaltic
Horsepower	HP	1/3

III.H. RRF Air Compressor System

The air compressor system consists of two air compressors and receivers to be used for membrane integrity system. Two air compressors will operate in a duty/standby arrangement and each compressor is sized for 100% of the required capacity at 175 psig discharge pressure. The design criteria of the air compressor system are summarized in **Table 2-15**.

Table 2-15 RRF Air Compressor Design Criteria		
Item	**Units**	**Value**
Number	No.	2
Capacity	acfm	17.2
Discharge Pressure	psig	175
Type	-	Reciprocating compressor
Receiver Storage Capacity	gallons	120
Motor		
Horsepower	HP	5
Voltage	VAC	460
Phase	-	3
RPM	rpm	1,800

III.I. RRF Air Scour Blower System

Table 2-16 presents the design criteria for the air scour blowers. Both multi-stage centrifugal and positive displacement (PD) were evaluated and summarized in a memorandum (see **Appendix 2-C**). PD blowers were found to be more efficient and suitable for simple on/off constant flow operation than the multi-stage centrifugal blowers, and were selected by EMWD. Two PD blowers will be provided, operating in a 1 duty + 1 standby mode. Sound enclosure will be provided for each blower.

Table 2-16
RRF Air Scour Blower System Design Criteria

Item	Units	Value
Number	No.	2
Duty	No.	1
Standby	No.	1
Capacity	scfm	1,358
Discharge Pressure	psig	4.9
Type	-	Positive Displacement
Motor		
Horsepower	HP	50
Voltage	VAC	460
Phase	-	3
RPM	rpm	3,600

III.J. Water Quality Monitoring Instrumentation

High accuracy turbidimeters will be provided to monitor the turbidity of the membrane feed (first stage reject) and second stage permeate water. Additional monitoring parameters will be provided if EMWD decides to proceed with the demonstration study as discussed in **Chapter 1**.

III.K. Chemical Pumps

The existing plant chemical storage tanks will be incorporated as part of the RRF and provide chemicals to the RRF. **Tables 2-17 through 2-20** present the design criteria for the new chemical pumps, located in the existing chemical facilities. Watson-Marlow Bredel's peristaltic pumps will be provided as requested by EMWD. The chemical feed pumps will be sized for the maximum instantaneous flow. CIP chemicals – sodium

hypochlorite, citric acid and hydrochloric acid will be added to the heated water at the discharge of the CIP pumps.

Three (two duty and one common standby) sodium hypochlorite feed pumps will be provided. One duty pump will dose sodium hypochlorite for maintenance cleans, including the dose to the backpulse tank for biogrowth prevention, and the other duty pump will dose sodium hypochlorite for recovery cleans. **Table 2-17** presents the design criteria of the RRF Sodium Hypochlorite feed pumps.

Table 2-17
RRF CIP - Sodium Hypochlorite (0.8%) Feed Pumps
Design Criteria

Item	Units	Value
Feed Pumps		
Number	No.	03
Duty	No.	2
Standby	No.	1
Capacity	gph	1,425
Type	-	Peristaltic
Horsepower	HP	5

Two (one duty and one standby) citric acid feed pumps will be provided for maintenance and recovery cleans and the design criteria of the feed pumps are as summarized in **Table 2-18**.

Table 2-18
RRF CIP - Citric Acid (50%) Feed Pumps
Design Criteria

Item	Units	Value
Feed Pumps		
Number	No.	2
Duty	No.	1
Standby	No.	1
Capacity	gph	86
Type	-	Peristaltic
Horsepower	HP	¾

Two (one duty and one standby) sodium bisulfite feed pumps will be provided for CIP neutralization and the design criteria of the feed pumps are as summarized below in **Table 2-19**.

Table 2-19 RRF CIP Neutralization - Sodium Bisulfite (38%) Feed Pumps Design Criteria		
Item	**Units**	**Value**
Feed Pumps		
Number	No.	2
Duty	No.	1
Standby	No.	1
Capacity	gph	31
Type	-	Peristaltic
Horsepower	HP	1/3

Two (one duty and one standby) sodium hydroxide feed pumps will be provided for CIP neutralization and the design criteria of the feed pumps are as summarized below in **Table 2-20**.

Table 2-20 RRF CIP Neutralization - Sodium Hydroxide (25%) Feed Pumps Design Criteria		
Item	**Units**	**Value**
Feed Pumps		
Number	No.	2
Duty	No.	1
Standby	No.	1
Capacity	gph	62
Type	-	Peristaltic
Horsepower	HP	3/4

The chemicals will be conveyed from the existing chemical feed area to the RRF in marprene piping and provided with secondary containment.

CHAPTER 3
SITE PLAN DEVELOPMENT

PART I. GENERAL

The RRF will be installed at the PWFP located at 19750 Old Evans Road near Rider Street in Perris, California in the County of Riverside on behalf of EMWD. This chapter presents the site selection process, and describes the selected site, including utility crossings, tie-in points and summarizes the findings of the survey, geotechnical and soil corrosivity investigations.

PART II. SITE SELECTION

The RRF will have 1.0 mgd capacity. A footprint of approximately 2,640 ft^2 or 40 feet by 66 feet was assumed for the purpose of preliminary site selection and based on past similar size installations.

Six potential sites were initially identified for the RRF, as shown on **Figure 3-1** below. Each site was evaluated based on criteria and weighting factors presented in **Table 3-1**.

Table 3-1
Site Evaluation Criteria and Weighting Factors

Siting Factors	Weight
Footprint	10
Expandability	5
Constructability	5

Through a series of review workshops with EMWD, five of these six sites were eliminated. The reasons for the elimination are itemized in the meeting notes appended in **Appendix 3-A**. To summarize, only one site provided sufficient space while minimizing interferences between construction, operations, and future site needs.

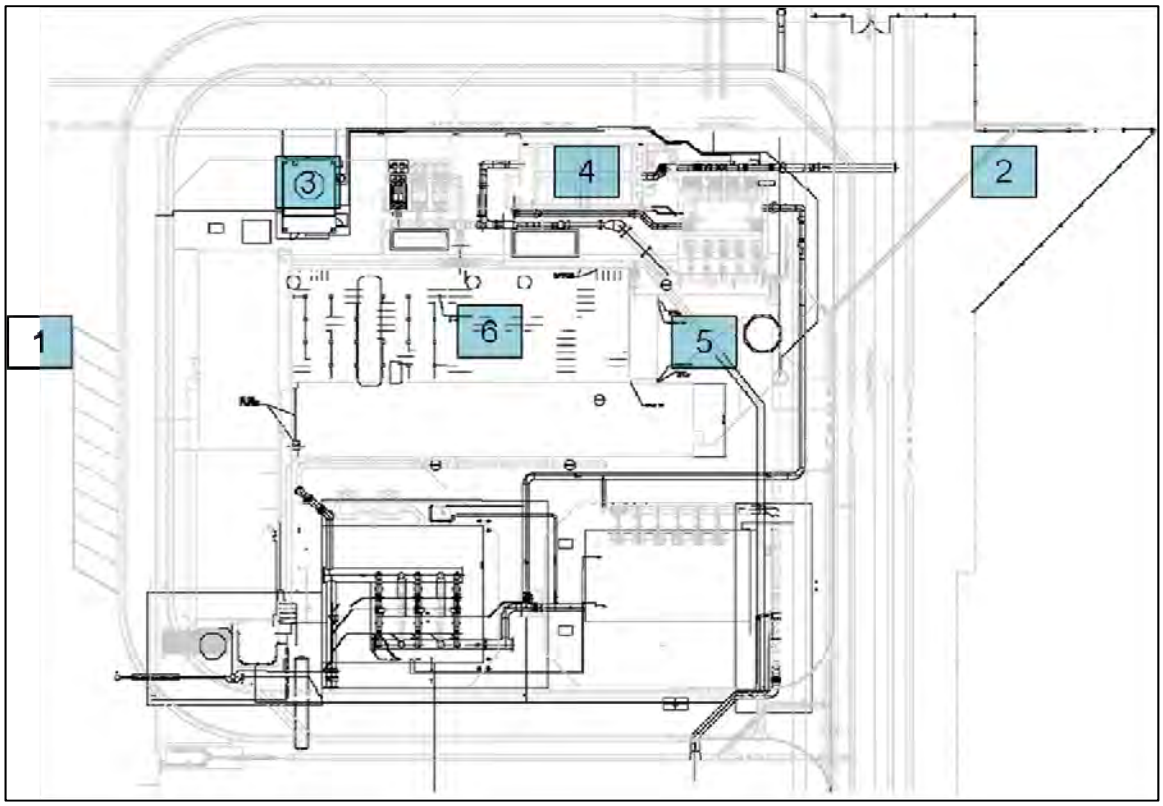

Figure 3-1 Potential Sites for RRF

Site Number 1, located west of PWFP, was selected as the site for RRF for the following reasons:

- Close proximity to the existing sewer lift station, which can serve as backup discharge for the RRF
- Close proximity to the necessary connection points (e.g. chemicals & electrical)
- Ability to expand to a 3rd Stage if desired
- Ability to maintain space for the plant to expand in the future.

II.A. Utilities Research

The following reference documents are used to identify and locate utilities around the selected site:

- Perris Water Treatment Plant Phase I – 10 mgd Record Drawings
- Perris Water Filtration Plant Phase II – Expansion to 20 mgd Record Drawings

- Perris Water Filtration Plant Raw Water Augmentation Pump Station Record Drawings
- Perris Water Filtration Plant Phase II Upgrade to Increase Capacity to 24 mgd – 90% design drawings
- Southern California Edison Company As-Builts

II.B. Survey

The preliminary design is based on the survey prepared by The Thomsen Company, Inc. The basis of bearings for the survey is the California State Plane Coordination System, CCS83. The benchmark used is the brass disc on the top of a large boulder stamped "40 Y 1931" with elevation of 1493.77 (NGVD 29). It was noted by the surveyor that NGVD 29 datum elevation of 1493.77 is a superseded survey control. **Appendix 3-B** includes the survey file in a CD.

II.C. Geotechnical Investigation

As part of the scope of work for this project, Kleinfelder, Inc. (Kleinfelder) performed a supplemental geotechnical investigation to the geotechnical investigation conducted by CH2MHill in May 2004 (May 2004 investigations). The purpose of this supplemental investigation was to evaluate the characteristics of the soils near the project site and provide recommendations on the geotechnical aspects of the design and construction of the project.

The findings of the geotechnical investigation were consistent with the May 2004 investigation. Kleinfelder concluded that the RRF location is geotechnically feasible, provided the conclusions and recommendations on the following are incorporated into the project design and construction:

- 2007 CBC Seismic Design Parameters
- Liquefaction
- Expansion Soils

See Part III below for more detailed discussion of the recommendations. The Geotechnical Report and the May 2004 investigations are appended to this report (**Appendix 3-C**).

II.D. Soil Corrosivity Investigation

Laboratory tests were completed on two soil samples taken for the bores completed as part of supplemental geotechnical investigation. The purpose of these tests was to determine the deleterious effects the soil might have on underground utility piping and concrete structures. The results of the test are as follows:

- Electrical resistivities were in the mildly corrosive category with as-received moisture. When saturated, the resistivities were in the moderately corrosive to corrosive categories. The resistivities dropped considerably with added moisture because the samples were dry as-received.
- Soil pH value was 7.7 which is viewed as mildly alkaline.
- The soluble salt content of the sample was low.
- Tests were not conducted for sulfide and negative oxidation-reduction potential because the samples did not exhibit characteristics typically associated with anaerobic conditions.
- The soil is classified as corrosive to ferrous metals.

The recommendations for corrosion protection on a variety of materials are summarized in the appended Soil Corrosivity Study (**Appendix 3-C**).

PART III. DESIGN CRITERIA

III.A. Civil Site Development

The new RRF will include new paved access roads around the new process facilities (see **Chapter 5** for site plans). The existing site access roads will remain open during construction. The Contractor laydown area will be located west of the new RRF.

III.B. Geotechnical

The recommendation made from the May 2004 investigations was based on the 2001 California Building Code (CBC). Subsequently, the 2007 CBC was adopted by the engineering community as the standard of practice in January 2008. Findings indicated that the San Jacinto Valley fault is capable of generating a maximum credible earthquake (MCE) of magnitude of 6.9 located approximately 7.4 miles away from the site.

Kleinfelder concluded that with the period of the RRF less than ½, the site profile can be classified as Site Class B. CBC 2007 Seismic Design Parameters presented in **Table 3-2** below are applicable for the project.

Table 3-2
2007 CBC Seismic Design Parameters

Site Classification (Table 1613A.5.2)	**D**
S_s (Figure 1613.5(3))(g)	1.5
S_1(Figure 1613.5(4))(g)	0.6
F_a(Table 1613A.5.3(1))	1.0
F_v(Table 1613A.5.3(2))	1.50
S_{MS} (Equation 16A-37)(g)	1.5
S_{M1} (Equation 16A-38)(g)	0.9
S_{DS}(Equation 16A-39)(g)	1.0
S_{D1} (Equation 16A-40)(g)	0.6

III.B.i Soil Liquefaction Assessment

Liquefaction occurs when loose, saturated soil loses strength due to excessive pore pressure that is generated by seismic activity. According to the State of California (CDMG, 1997), the historic high groundwater level at the site has been mapped at a depth of approximately 30 feet bgs. The water table was encountered at 38.5 and 33.5 feet deep during boring explorations. A PGA of 0.4g with an earthquake magnitude of 6.9 was used as a design-level seismic event for the liquefaction analyses.

Liquefaction potential was evaluated using the SPT and equivalent-SPT data. It was concluded by Kleinfelder that medium dense sandy soils below groundwater could be subject to liquefaction in the event of a major earthquake occurring on a nearby fault. Kleinfelder estimated that seismically-induced settlement of saturated sandy soils due to strong ground shaking during a design-level seismic event could be on the order of 1 inch or less. For highly heterogeneous sites, differential settlements on the order of 75 to 100 percent of the total seismic settlement could be expected. Based on the soils encountered in the supplemental geotechnical investigation and in the previous borings during May 2004 investigations, differential seismic settlement at the site is expected to be on the order of 0.5 inches or less over a horizontal distance of 30 feet.

III.B.ii Soil Corrosivity

The buried pipe material is anticipated to consist of C900 (plastic) material or possibly ductile iron with an appropriate coating(s) or mortar lined and coated steel. The following steps may be taken to protect the piping:

- Apply a suitable coating intended for buried use
- Apply cathodic protection to cast and ductile iron piping as per NACE standard SP0169
- Protect all metallic fittings and valves with wax tape per AWWA C217 or epoxy

Any type of cement may be used and standard concrete cover over reinforcing steel may suffice.

CHAPTER 4
FACILITIES REQUIREMENTS

PART I. GENERAL

This chapter presents facility requirements and design considerations of the proposed RRF, including hydraulic profile, pipe routing, drain, and electrical power and control systems.

I.A. General Requirements

I.A.i Security

The following considerations will be taken during final design include:

- Security fencing will be provided for equipment located outside the building, e.g. the backpulse tank, CIP tank and hydrochloric acid facility.
- Card readers may be required to get into the new facility (match existing)
- Cameras and intrusion alarms will be provided for the new RRF.

I.A.ii Building Entry and Egress

Building entry and egress will be designed according to the latest relevant codes. At least two man doors will be provided for the RRF building. A roll up door will be provided for access to major equipment including pumps, blowers and compressors.

I.A.iii Aesthetics

The RRF Equipment Building will be an insulated, pre-fabricated metal building similar aesthetically to the existing mechanical building. Skylights will be considered during final design to allow more natural light into the building, so windows can be minimized.

I.A.iv Accessibility

The RRF will be located west of the existing Control Building and Chemical Facilities, separated by a paved road. The new hydrochloric acid facility particularly will be located next to the paved road, providing easy accessibility for bulk chemical delivery trucks.

I.A.v Noise Mitigation

There will not be any equipment that will exceed OSHA noise level requirement of 85 dBA for one hour exposure per day, as measured within three-feet in any direction, and excluding background noise. The air scour blowers and compressors will be located in the new membrane building. In addition, enclosures will be provided for the air scour blowers.

I.A.vi Sewage Lift Station

The existing sewage lift station near the RRF is a package duplex pump station with two 40-gpm submersible grinder pumps discharging into a 2-inch sewer line. **Table 4-1** below presents the estimated plumbed flow to the lift station.

Table 4-1
Estimated Plumbed Flow to Existing Lift Station

Items	Number	Plumbed Flow, each (gpm)	Total Plumbed Flow (gpm)
Toilets	2	3.2(1)	6.4
Faucet /Sink	5	1.6(2)	8
Floor drain	2	5 (3)	10
Flows from analyzers	1	7(4)	7
Vacuum Pump	1	8	8
UV drain	1	20	20
TOTAL			**59.4**

Notes:
(1) Assume high efficiency toilets (1.6 gallon per flush) and 3.2 gpm. Locations: Control Room, UV Building
(2) From http://www.epa.gov/WaterSense/pubs/faq_bs.html. Locations: Control Room & UV Building, sinks in the existing lab and 1 in the UV conference room
(3) Assume same flow rate as a hose bibb
(4) Timed by EMWD

The existing lift station and the 2-inch discharge line are near the duty capacities and will not be expanded as part of this project. The RRF analyzer water will discharge into the lift station. The lift station will serve as the emergency backup discharge point for the RRP CIP tank overflow.

I.A.vii Drainage

A ground depression will be provided as drainage discharge for rain water captured on the RRF membrane tanks. The emergency overflow from the Reject Equalization Tank and RRF membrane tanks will also be sent to the ground depression.

I.A.viii Canopy

A canopy will be provided to cover the hydrochloric acid facility, BP and CIP tanks, and membrane tanks. The canopy might also cover the RRF equalization tank depending on the selected layout of the facility.

I.A.ix Approved Materials List and Sole Source List

EMWD's Approved Materials List and Sole Source List as appended (**Appendices 4-A and 4-B** respectively) will be incorporated into the final design, including the following items as discussed with EMWD:

- Dezurik valves with AUMA electric actuators will be used for 2 inch and larger valves. All other valves/actuators will be per GE's standards.
- Dezurik valves with Viton seats will be provided for all CIP valves.
- All membrane Aeration piping connections, wall penetrations, and headers will be 316 SS.
- HACH chlorine analyzers will be provided.
- All pumps will be Goulds pumps.
- Schedule 20 SS will be used for all piping 8" and larger; Schedule 40 will be used for all piping 6" and smaller.
- Aerzen Positive Displacement Blowers will be provided for air scour.
- Ejectors, instead of vacuum pumps, will be provided.

I.B. Membrane System Requirements

I.B.i Membrane Tank Piping

The incoming feed to the GE ZeeWeed 500d High Intensity membrane system is through a sump as shown in **Figure 2-4**. The same sump will be used as the CIP connection. A wall penetration through each membrane tank wall and near the bottom on the opposite

end of the feed will be provided for the reject piping. Wall penetrations near the top and at the side of the walls will be provided for the permeate piping. There will not be any pipe penetration through the membrane tank covers, which will be designed to be similar to existing covers on the first stage membranes.

I.B.ii Equipment Hoist

Access platform will be provided to aid in cassette removal. An equipment hoist will be provided to remove, replace and/or maintain membrane equipment and can be either a monorail or traveling bridge crane, depending on the selected layout of the facility. The equipment hoist will be capable of at least the weight of a "sludged" cassette, which is 4-5 tons dead load. **Table 4-2** below summarizes the key features of both monorail and traveling bridge cranes.

Table 4-2
Key Features of Monorail and Traveling Bridge Cranes

Monorail Crane	Traveling Bridge Crane
• The hoist and trolley run on a single stationary beam • Available in capacities up to 150 tons • Monorails are best used in applications where materials are to be transported from one fixed point to another fixed location • The monorail allows two axes of hook movement: up/down and forward/back along the monorail beam. There is no lateral motion under the monorail beam.	• Great flexibility for hook coverage and control over the load • Can avoid physical obstructions on floor • More costly than monorail crane

I.B.iii RRF Membrane Tank Covers

The RRF membrane tank covers will be similar to the existing membrane tank aluminium covers and will be designed for the weight of a "sludged" cassette (approximately 4-5 tons dead load) and live load of an operator working on the covers.

I.B.iv Cassette Laydown Area

A cassette laydown area will be located where the hoist crane can reach and also be easily accessed by a forklift and/or loading truck.

I.B.v RRF Chemical Analyzers

The layout of the membrane building will include provision for RRF chemical analyzers. RRF chemical analyzer water will be drained to the existing sewage lift station.

I.B.vi CIP and Backpulse Tanks Containment

Both the CIP and Backpulse tanks will be contained and the containment volume will be sized to contain the active volume of the RRF CIP tank. The content in the containment will be discharged manually to the sewer lift station. An overflow alarm and pH meter will also be provided.

I.C. Chemical Facilities

I.C.i Safety

The design of the new hydrochloric acid system will follow the National Fire Protection Code (NFPA) (California Fire Code 2001) and the Material Safety Data Sheet (MSDS) is appended in this report (**Appendix 4-C**). NFPA ratings of hydrochloric acid (33%) are as follows: Health: 3; Flammability: 0; Reactivity: 0. Hydrochloric acid (33% w/w) is corrosive and the following safety features will be included in the final design of the new hydrochloric acid facility:

- The facility will be outdoors and covered under a canopy.
- Hazard warning and first aid labels will be placed at highly visible locations.
- Eyewashes and safety showers will be provided.
- A vent will be provided on the bulk storage tank to allow off gas of vapors.
- The containment area will be sized to contain the full volume of the storage tank.
- Steps will be provided to meet the requirements of California Division of Occupational Safety and Health (CA-OSHA) requirements.
- A sump and sump pump will be provided for the removal of washwater from the containment area, discharging manually to the existing sewage lift station.
- Cage or railing will be provided on the bulk storage tank.
- Valves and fittings will be of material compatible with hydrochloric acid. Marprene tubing will be used, as recommended by Watson-Marlow Bredel (EMWD's preferred peristaltic pump manufacturer).

I.C.ii Leak Detection System

A leak detection system will be provided to monitor all buried chemical feed piping from the existing chemical facilities to the RRF. All buried piping will be double-contained. All alarms event that are detected by the leak detection system will be displayed at the local leak detection panel and at the Operator Workstation.

I.D. Control System

The Control System and Control Panels for RRF membrane system and support equipment including Allen Bradley ControlLogix Programmable Logic Controls (PLCs) will have the ability to communicate with Intellution "Fix 32" SCADA software.

A desk mounted operator workstation (RRF workstation) will be provided in the RRF building. EMWD's symbol and color legend (**Appendix 4-D**) will be incorporated into the final design. The following considerations will be included as part of the final design:

- The screens will be in conformance with EMWD's standard. GE will provide a set of graphics screens to load onto the existing plant control system workstation to show operating data and control points for each membrane unit using Intellution software.
- The status and controls for the RRF and the existing PWFP will be accessible from both the RRF workstation and the existing PWFP control room.
- All Allen Bradley PLC's shall communicate using ControlNet.

I.E. Electrical Power

A preliminary electrical load assessment confirms that there is sufficient available power supply for the RRF. Taking into consideration that EMWD prefers the distribution of power from the existing Control Building and the existing control room has space for expansion, the RRF Motor Control Centers (MCC) will therefore be located at the existing Control Building. **Figure 4-1** presents the proposed location of the RRF MCC. Half of the MCC is shown overhanging a trench, which allows for ease of access. A support will be provided in the trench for the MCC, and the trench plates will be modified to provide access. The layout of the MCC will be further developed during final design and the trenches will be investigated to verify there are indeed no conflicts. The wire color standard will be developed during final design too.

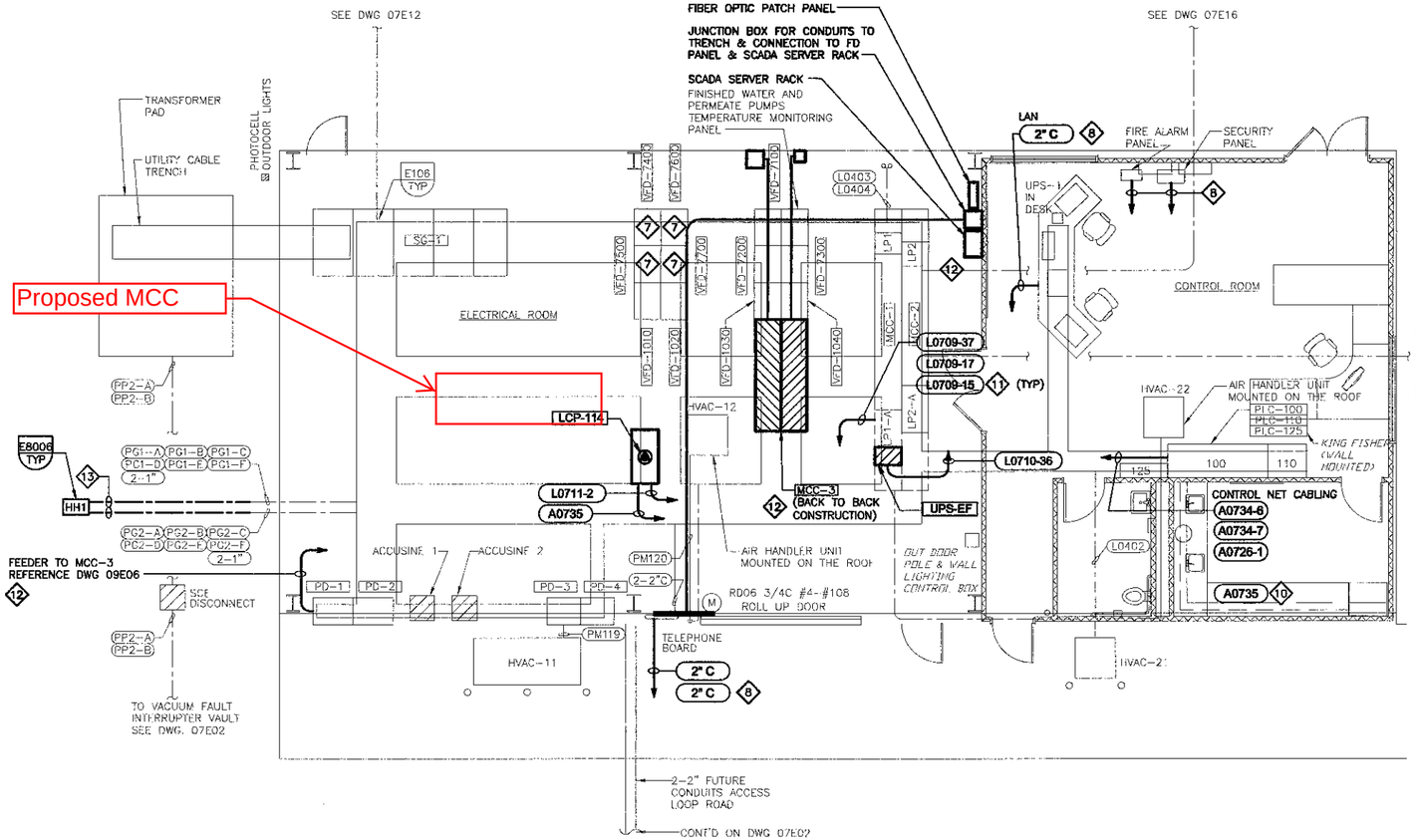

A — ELECTRICAL/CONTROL ROOM
3/16" = 1'-0"

NOTES:

1. SEGREGATE ALL POWER WIRING FROM SIGNAL AND CONTROL WIRING IN CABLE TRENCHES.
2. SCREENED ITEMS AND TEXT INDICATE EXISTING. DRAWING REFERENCES ARE TO ORIGINAL PLANT CONSTRUCTION DOCUMENTS. BOLD ITEMS INDICATE NEW EQUIPMENT AND REQUIREMENTS.
3. NOT USED
4. NOT USED
5. NOT USED
6. CONTRACTOR SHALL INSTALL ALL NECESSARY WIRING IN ACCORDANCE WITH SCHEMATIC DRAWINGS 09E09, 09E10 AND P & ID DRAWINGS FOR SIGNAL AND CONTROL WIRING REQUIRED BETWEEN MOTOR STARTERS IN MCC-3 AND LCP-114. THROUGH CABLE TRENCH, CONTRACTOR SHALL USE TYPE 1 CABLE FOR CONTROL WIRING AND TYPE 3 OR TYPE 5 CABLE FOR ANALOG SIGNAL WIRING. (NOTE: THESE REQUIRED CIRCUITS ARE NOT SHOWN IN THE RACEWAY SCHEDULE).
7. RELOCATE EXISTING VFD-7400, 7500, 7600, AND 7700 TO NEW UV DISINFECTION FACILITY ELECTRICAL ROOM. SEE DWG 09E19 FOR EQUIPMENT ARRANGEMENT.
8. REFERENCE DRAWING 09E13 FOR ADDITIONAL REQUIREMENTS ON LAN, FIRE ALARM AND SECURITY SYSTEM CONDUITS.
9. REFERENCE PANEL SCHEDULES ON DRAWINGS 09E28, 09E29 AND 09E30.
10. REFERENCE DRAWING 10N03 FOR INFORMATION ON CONTROL NET CABLE ROUTING.
11. REFER TO RACEWAY SCHEDULES FOR INFORMATION ON RACEWAY AND CIRCUIT REQUIREMENTS.
12. REFERENCE DRAWINGS 09E06, 09E07 AND 09E08 FOR POWER CIRCUITING INFORMATION.
13. THE EXISTING PG1,2 CONDUITS (TOTAL OF 12'-4") AND THE FOUR 1" CONDUITS SHALL BE EXTENDED AND TERMINATED AT NEW HAND HOLE HH1 LOCATED APPROXIMATELY 20 FEET FROM THE CONTROL BUILDING WALL. THIS HAND HOLE AND THE EXISTING/EXTENDED CONDUITS SHALL BE USED TO ROUTE ALL CIRCUITS FROM THE NEW FACILITIES NORTH AND EAST OF THE CONTROL BUILDING, WHICH DO NOT ALREADY HAVE PREVIOUSLY INSTALLED EMPTY RACEWAYS TO THE CONTROL BUILDING. SEGREGATE POWER/LIGHTING CIRCUITS FROM SIGNAL (DISCRETE AND ANALOG) CIRCUITS. NOTE: FOR REFERENCE, THE EXISTING PG-1, 2 AND OTHER SPARE CONDUITS SHOULD BE STUBBED AT APPROXIMATELY 14'-6" OFF THE BUILDING AT APPROXIMATE ELEVATION 1444.67. CONTRACTOR SHALL FIELD VERIFY EXACT LOCATION.
14. (1) DISCRETE SIGNALS SHALL BE TRANSFERED FROM PLC-100/LCP-100 (EXISTING PLANT SCADA PANEL) TO PLC-110/LCP-110 (EXISTING ZENON MASTER PANEL FOR TANKS 1, 2 AND 3) LOCATED IN THE CONTROL BUILDING CONTROL ROOM. THESE SIGNALS ARE SHOWN ON P & ID DRAWING 10N12 FOR EXISTING VACUUM PUMPS 3 AND 4. CONTRACTOR SHALL SEPARATE OUT THE SIGNALS AT PANEL LCP-100 AND USE SPARE TERMINALS IN PANEL LCP-100 AS "TIE-POINTS". CONTRACTOR SHALL EXTEND THE SIGNAL WIRING USING #14 WIRE THROUGH THE EXISTING CABLE TRENCH TO THE ADJACENT PANEL LCP-110. DRAWINGS AND DETAILS FOR INTERNAL PANEL MODIFICATIONS AND TERMINAL LANDING POINTS ARE PROVIDED IN THE DRAWING PROVIDED FOR THE PRE-NEGOTIATED MEMBRANE SYSTEM PACKAGE, SUPPLIED BY ZENON. CONTRACTOR SHALL PERFORM THE WORK AS INDICATED HEREIN AND AS DIRECTED BY THE ZENON DRAWINGS AND DETAILED INSTRUCTIONS.

FIGURE 4-1 PROPOSED LOCATION OF RRF MCC

RECORD DRAWING

THIS RECORD DRAWING HAS BEEN PREPARED, IN PART, ON THE BASIS OF INFORMATION COMPILED BY OTHERS. IT IS NOT INTENDED TO REPRESENT IN DETAIL THE EXACT LOCATION, TYPE OF COMPONENT NOR MANNER OF CONSTRUCTION. FUTURE USE OF THE INFORMATION ON THIS DRAWING REQUIRES FIELD VERIFICATION.

⚠ EMWD INSPECTOR _____ 8/10/09

Underground Service Alert
Call: TOLL FREE 1-800-227-2600
TWO WORKING DAYS BEFORE YOU DIG

REVISIONS

NO.	DATE	INITIAL	DESCRIPTION	APP'VD.
⚠	03/09	W.P.	RECORD DRAWING	

VERIFY SCALES
BAR IS ONE INCH ON ORIGINAL DRAWING
0 — 1"
IF NOT ONE INCH ON THIS SHEET, ADJUST SCALES ACCORDINGLY

CH2MHILL
6 HUTTON CENTRE DRIVE, SUITE 700
SANTA ANA, CALIFORNIA 92707
714-429-2000

APPROVED BY:
DIRECTOR OF ENGINEERING DATE
REFERENCES

EASTERN MUNICIPAL WATER DISTRICT

		DATE
DESIGNED	T B	09/04
DRAWN	S SALAZAR	09/04
TRACED		-
CHECKED		-
SUBMITTED		-

APPROVALS

	INITIAL	DATE
PROJECT ENGINEER		
INSPECTION		
WATER OPERATIONS		
SEWER OPERATIONS		

SCALE: AS SHOWN

EASTERN MUNICIPAL WATER DISTRICT
RIVERSIDE COUNTY, CALIFORNIA
PERRIS WATER FILTRATION PLANT
EXISTING CONTROL BUILDING - POWER PLAN

SPEC. 963W
I.D. 00
S.A. 41
W.O. 10594
C.O. 66045
COORD. 44A04
SHT. 127 OF 156
D- 29854
09E25

RECORD DRAWING

I.F. Future Provisions

I.F.i RRF UV System

As discussed in **Chapter 1**, CDPH may consider a demonstration study to investigate the possibility of sending treated water from the RRF to PWFP's existing UV disinfection system prior to being distributed in the potable water system. To do so, the RRF will have to demonstrate a minimum of 4.0 log reduction for both *Giardia Lamblia* and *Cryptosporidium*. This will require supplemental disinfection with the PWFP's UV system or possibly a future dedicated UV system at the RRF.

Space and power provisions for the dedicated UV system at the RRF will be provided in the design and layout of the RRF. It was assumed that the RRF treated flow could be returned to the head of the plant during the maintenance of the dedicated UV system. Therefore, one UV reactor will suffice. The following provisions for future UV system will be included and confirmed during final design:

- Space for one Trojan Swift12 UV reactor
- Space for a control panel (including the power supply) – 5' x 3'
- A straight pipe run of 10 ft for UV reactor and piping
- 6 kW connected average load assumed

PART II. DESIGN CRITERIA

II.A. Pipe Routing

Figure 4-2 below presents the preliminary pipe routing for the RRF. A new 10-inch reject pump discharge header will be provided and connected to the new RRF equalization tank and to the existing reject equalization tank. The new 10-inch reject discharge line will provide EMWD with operational flexibility and redundancy as the first-stage reject can be sent to the sewer via the existing equalization tank when the RRF is shut down. The 10-inch line will run along the ceiling of the corridor from the mechanical building to the chemical storage area, and be buried when crossing the road to the RRF.

The permeate piping from the second-stage will be buried leaving the RRF and connect to the off-spec pipeline adjacent to the valve vault outside the existing UV Disinfection

Facility. The existing off-spec pipeline returns flow to the Raw Water Pump Station. The reject from the second-stage (RRF) and the CIP drain (neutralized CIP) will be returned to the existing Reject Equalization Tank via a new 6-inch line that runs along the ceiling of the corridor from the chemical storage area to the mechanical building, connecting to the existing 12 inch line. The chemical lines will be buried when crossing the road from the existing chemical storage area to the RRF.

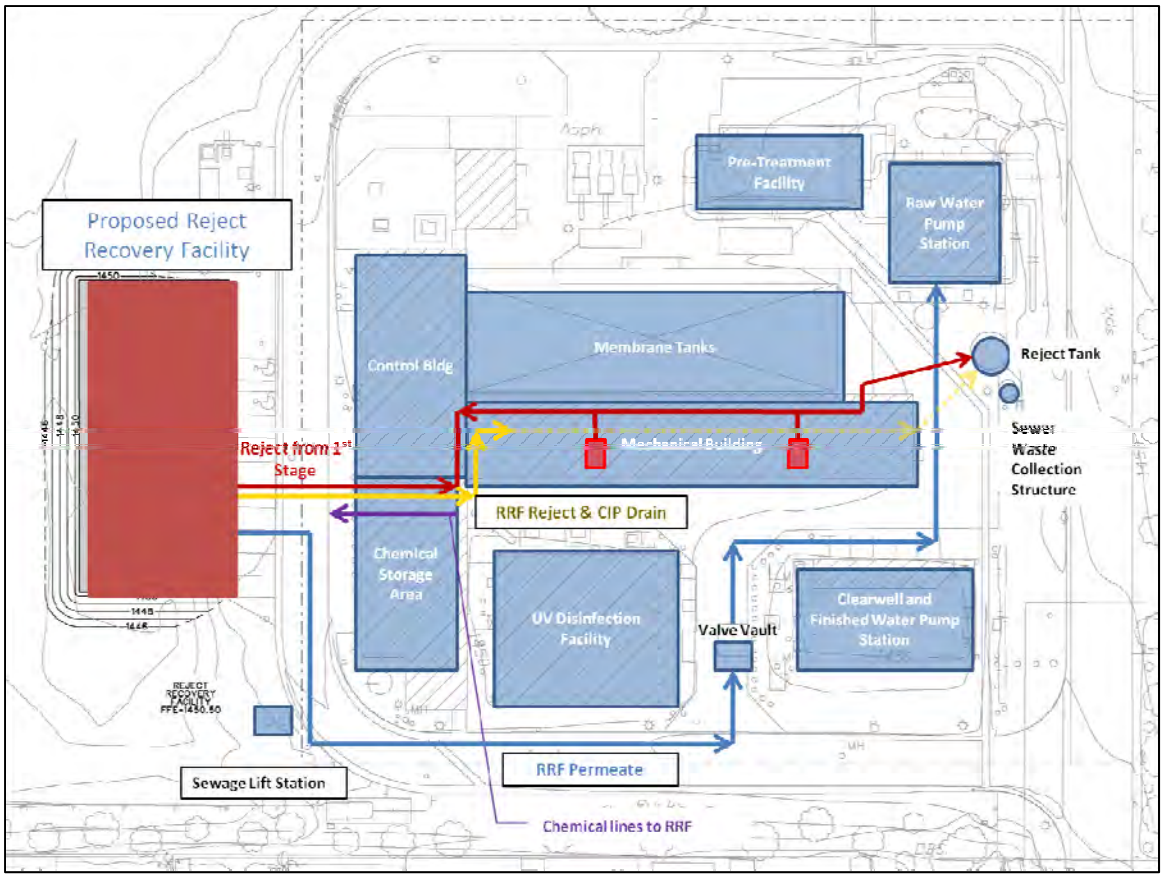

Figure 4-2 Preliminary Pipe Routing

II.B. Hydraulic Profile

Figure 4-3 presents the preliminary hydraulic profile of the RRF when operating at 1.0 mgd capacity.

Plot Date: 27-MAY-2011 09:43
User: Brandon J Shin
PlotScale: 0.083333:1
DesignScript: MWH_Iplot_PenTable_V89.pen
ColorTable: bw.ctb
Model: LAYOUT1
File: EMWD_G02.dgn

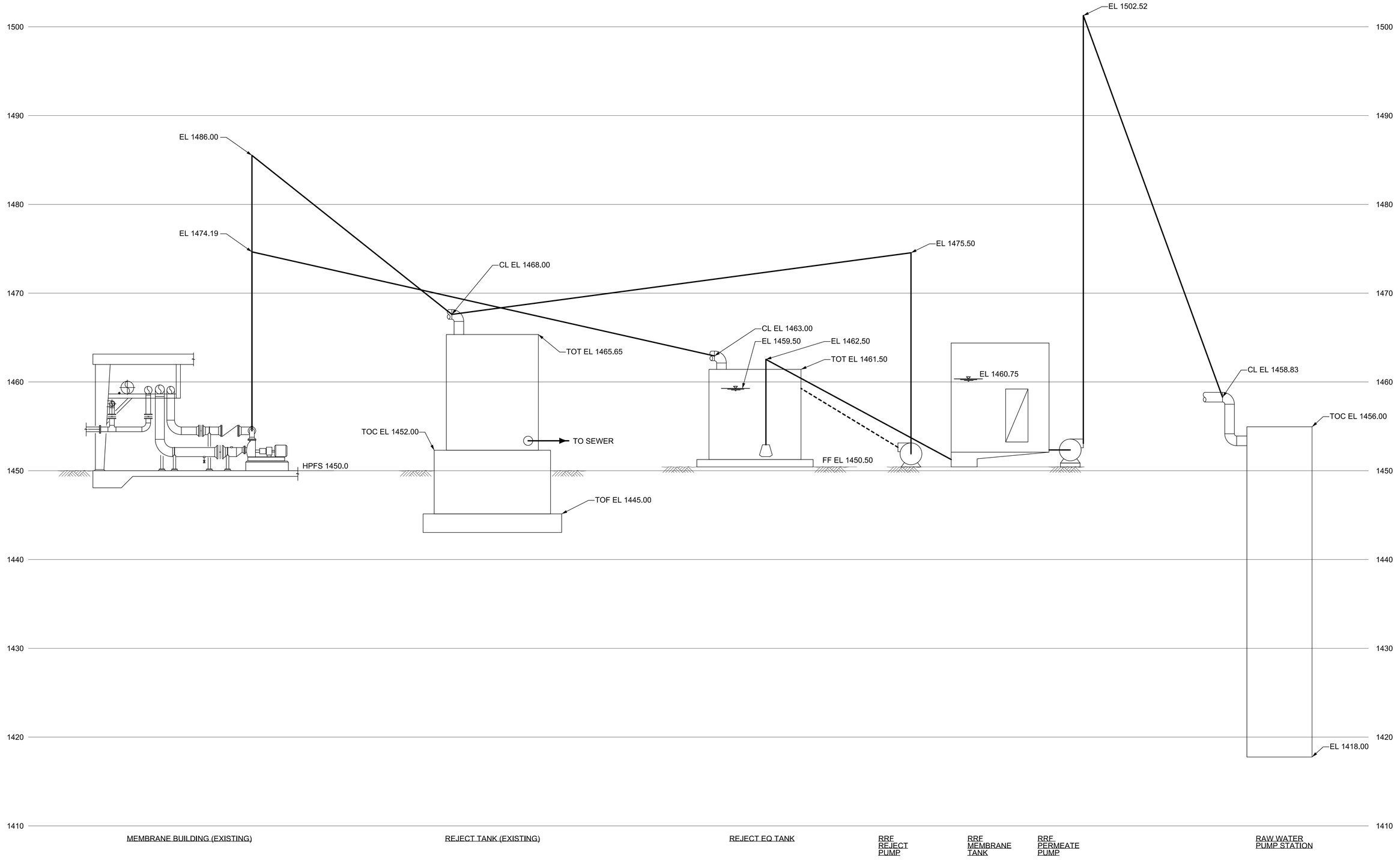

REV	DATE	BY	DESCRIPTION

SCALE: NO SCALE

WARNING: 0 ½ 1 — IF THIS BAR DOES NOT MEASURE 1" THEN DRAWING IS NOT TO SCALE

DESIGNED

DRAWN

CHECKED

PRELIMINARY DOCUMENT PHASE - MAY 2011

NOT FOR CONSTRUCTION

This document is an interim document and not suitable for construction. As an interim document, it may contain data that is potentially inaccurate or incomplete and is not to be relied upon without the express written consent of the preparer.

MWH®

EASTERN MUNICIPAL WATER DISTRICT SINCE 1950

PERRIS WATER FILTRATION PLANT

GENERAL
RRF HYDRAULIC PROFILE

SHEET G-2

1008058

CHAPTER 5
LAYOUT OPTIONS

PART I. INTRODUCTION

The layout options presented in this chapter were developed with the requirements as discussed in **Chapter 4,** as well as the following considerations:

- Facilities will be configured to maximize the use of common walls between process units/facilities.
- The overall layout should be logical and easily expandable.
- Pavement was assumed for all options around the facility for truck access.

PART II. DESCRIPTIONS OF LAYOUT OPTIONS

II.A. Option 1

Figure 5-1 presents the general layout of Option 1 and **Figure 5-2** presents the site plan for Option 1. Key features of Option 1 are as follows:

- The RRF Equalization Tank will be located at the south side of the facility.
- Membrane tanks will be aligned side by side with the feed sumps opposite to each other, maximizing use of common wall construction.
- The RRF equalization tank and membrane tanks will be fenced for security reasons. Fence mesh-size will be selected to help minimize bird entry.
- The Reject, Process and CIP pumps will be located inside the RRF building, together with the blowers and compressors.
- The required RRF building footprint will be 32 ft by 37.5 ft; 1,200 square feet.
- The required RRF footprint will be dictated by the layout of equipment inside the building. The RRF will be 92 ft by 38 ft; approximately 3,500 square feet.
- Pipe trenches will be provided for the feed, reject, permeate and CIP piping, both along the sides of the membrane tanks and inside the building.
- Cassette laydown area will be located next to the road.
- A traveling bridge will be used for equipment hoist.
- CIP tank shares the same containment volume with the Backpulse (BP) tank.

- Hydrochloric acid facility will be located next to the road for easy bulk delivery of chemical.
- The canopy will cover the hydrochloric acid facility, the RRF BP, CIP and membrane tanks.

II.B. Option 2

Figure 5-3 presents the general layout of Option 2 and **Figure 5-4** presents the site plan for Option 2. Key features of Option 2 are as follows:

- The RRF Equalization Tank will be located on the south side of the facility.
- Membrane tanks will be aligned next to each other with the feed sumps next to each other.
- The Reject, Process and CIP pumps will be located inside the RRF building, aligned next to the sides of the membrane tanks. In particular, the CIP pumps will be located next to the feed sumps.
- Pipe trench will be provided for the feed, reject, permeate and CIP piping inside the RRF building.
- The required building footprint will be 37 ft by 25 ft; 925 square feet.
- The length of RRF will be dictated by the length of the membrane tanks; whereas the width will be dictated by the layout of equipment inside the building and the width of the membrane tanks. The RRF will be 68 ft by 36 ft; approximately 2,500 square feet.
- A monorail crane will be used for equipment hoist.
- Paved road will be provided for truck access to the cassette laydown area.
- The canopy will cover the hydrochloric acid facility, the RRF BP, CIP and membrane tanks.

II.C. Option 3

Figure 5-5 presents the general layout of Option 3 and **Figure 5-6** presents the site plan for Option 3. Key features of Option 3 are as follows:

- To mitigate the possible noise generated from the submersible feed pumps, the RRF Equalization Tank will be "tucked" in the middle of the facility.
- The membrane building will be located on the south side of the RRF.

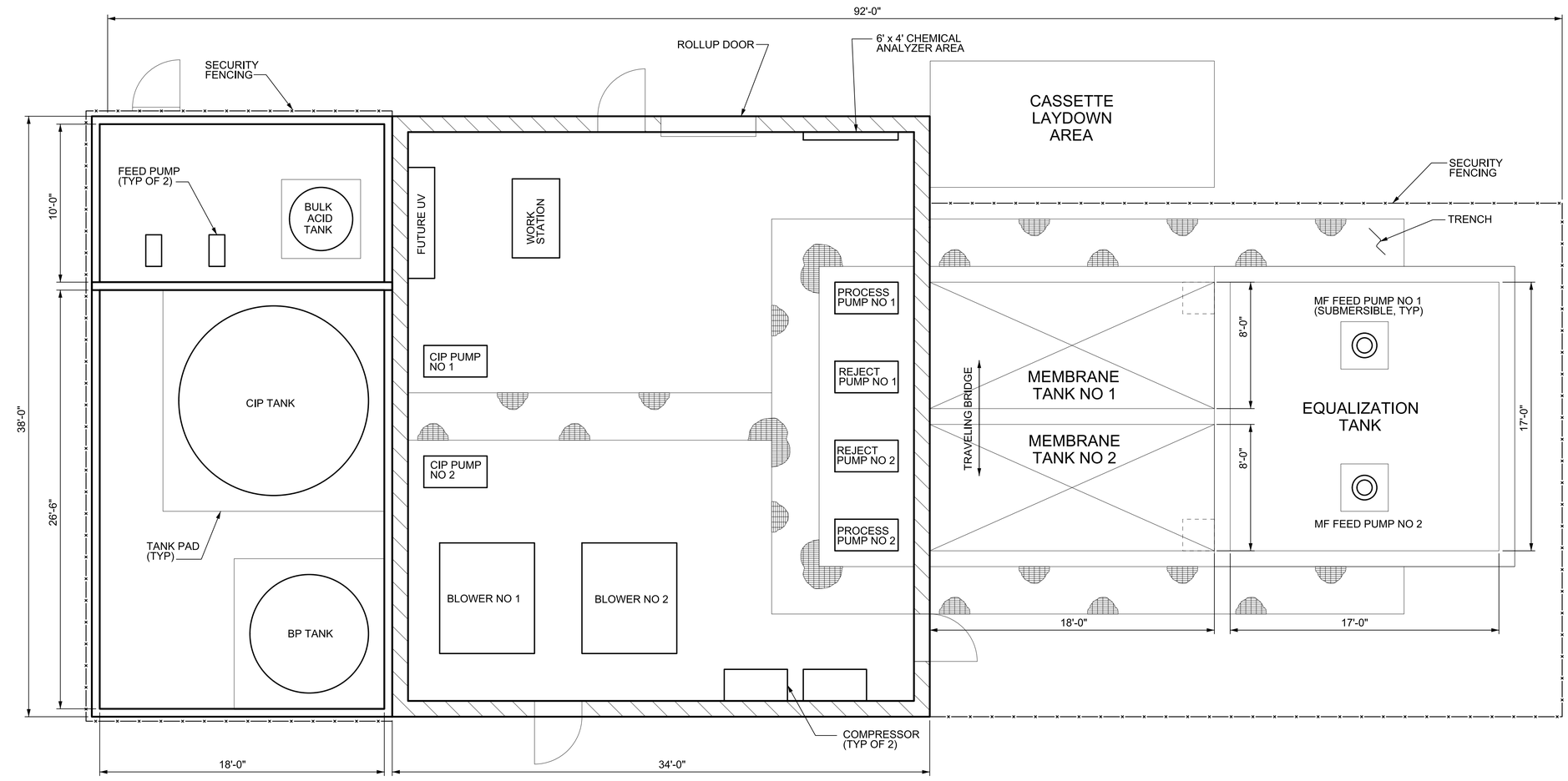

REV	DATE	BY	DESCRIPTION

SCALE: 1/4" = 1'-0"

WARNING: 0 ½ 1 — IF THIS BAR DOES NOT MEASURE 1" THEN DRAWING IS NOT TO SCALE

DESIGNED

DRAWN

CHECKED

NOT FOR CONSTRUCTION

This document is an interim document and not suitable for construction. As an interim document, it may contain data that is potentially inaccurate or incomplete and is not to be relied upon without the express written consent of the preparer.

MWH®

EASTERN MUNICIPAL WATER DISTRICT SINCE 1950

PERRIS WATER FILTRATION PLANT

OPTION 1
RRF LAYOUT

FIGURE 5-1

1008058

File: EMWD_FIGS-1.dgn Model: LAYOUT1 ColorTable: bw.ctb DesignScript: MWH_Iplot_PenTable_V89.pen PlotScale: 0.083333:1 User: Brandon J Shin Plot Date: 08-JUN-2011 16:03

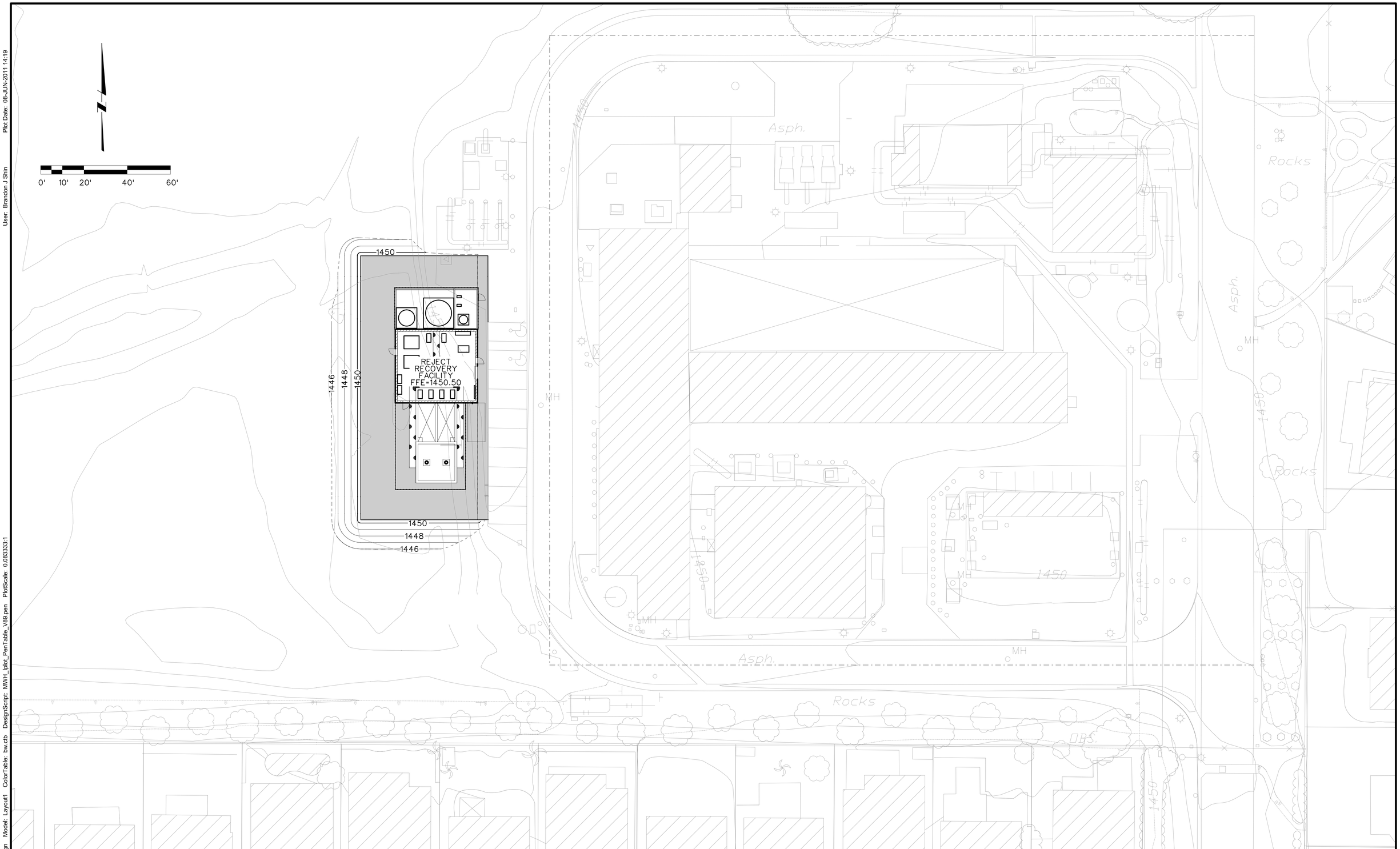

REV	DATE	BY	DESCRIPTION

SCALE
1" = 20'

WARNING
0 ½ 1
IF THIS BAR DOES NOT MEASURE 1" THEN DRAWING IS NOT TO SCALE

DESIGNED G BEHNKE
DRAWN G BEHNKE
CHECKED

NOT FOR CONSTRUCTION
This document is an interim document and not suitable for construction. As an interim document, it may contain data that is potentially inaccurate or incomplete and is not to be relied upon without the express written consent of the preparer.

MWH®

EASTERN MUNICIPAL WATER DISTRICT
SINCE 1950

PERRIS WATER FILTRATION PLANT

OPTION 1
SITE PLAN

FIGURE
5-2
1008058

File: EMWD_5-2.dgn Model: Layout1 ColorTable: bw.ctb DesignScript: MWH_lplot_PenTable_V89.pen PlotScale: 0.083333:1
User: Brandon J Shin Plot Date: 08-JUN-2011 14:19

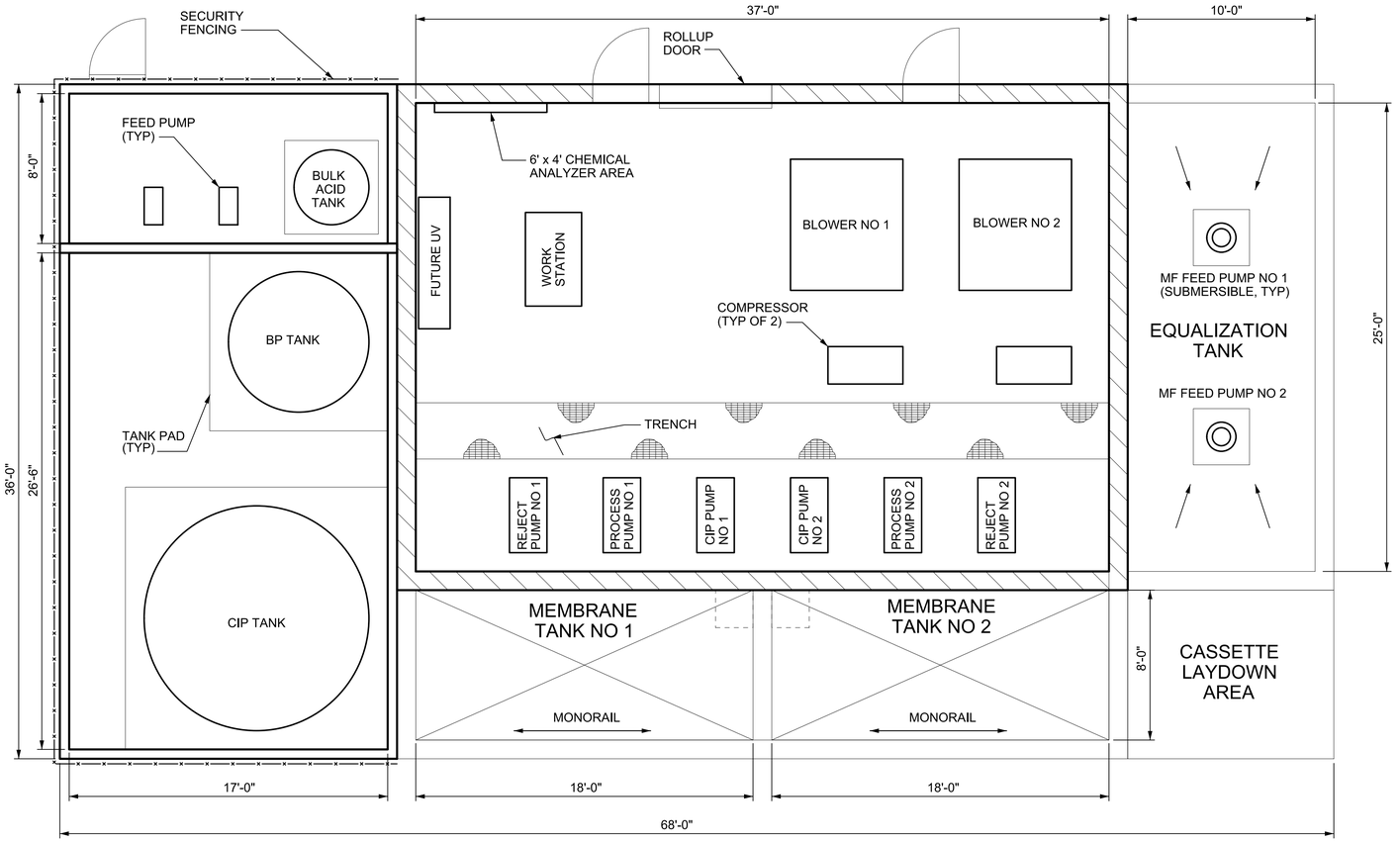

REV	DATE	BY	DESCRIPTION

SCALE: 1/4" = 1'-0"

WARNING: 0 ½ 1 — IF THIS BAR DOES NOT MEASURE 1" THEN DRAWING IS NOT TO SCALE

DESIGNED

DRAWN

CHECKED

NOT FOR CONSTRUCTION

This document is an interim document and not suitable for construction. As an interim document, it may contain data that is potentially inaccurate or incomplete and is not to be relied upon without the express written consent of the preparer.

MWH®

EASTERN MUNICIPAL WATER DISTRICT SINCE 1950

PERRIS WATER FILTRATION PLANT

OPTION 2
RRF LAYOUT

FIGURE
5-3
1008058

File: EMWD_FIG5-3.dgn Model: LAYOUT1 ColorTable: bw.ctb DesignScript: MWH_Iplot_PenTable_V89.pen PlotScale: 0.083333:1
User: Brandon J Shin Plot Date: 08-JUN-2011 16:03

User: Brandon J Shin
Plot Date: 08-JUN-2011 14:19
PlotScale: 0.083333:1
DesignScript: MWH_Iplot_PenTable_V89.pen
ColorTable: bw.ctb
Model: Layout1
File: EMWD_5-4.dgn

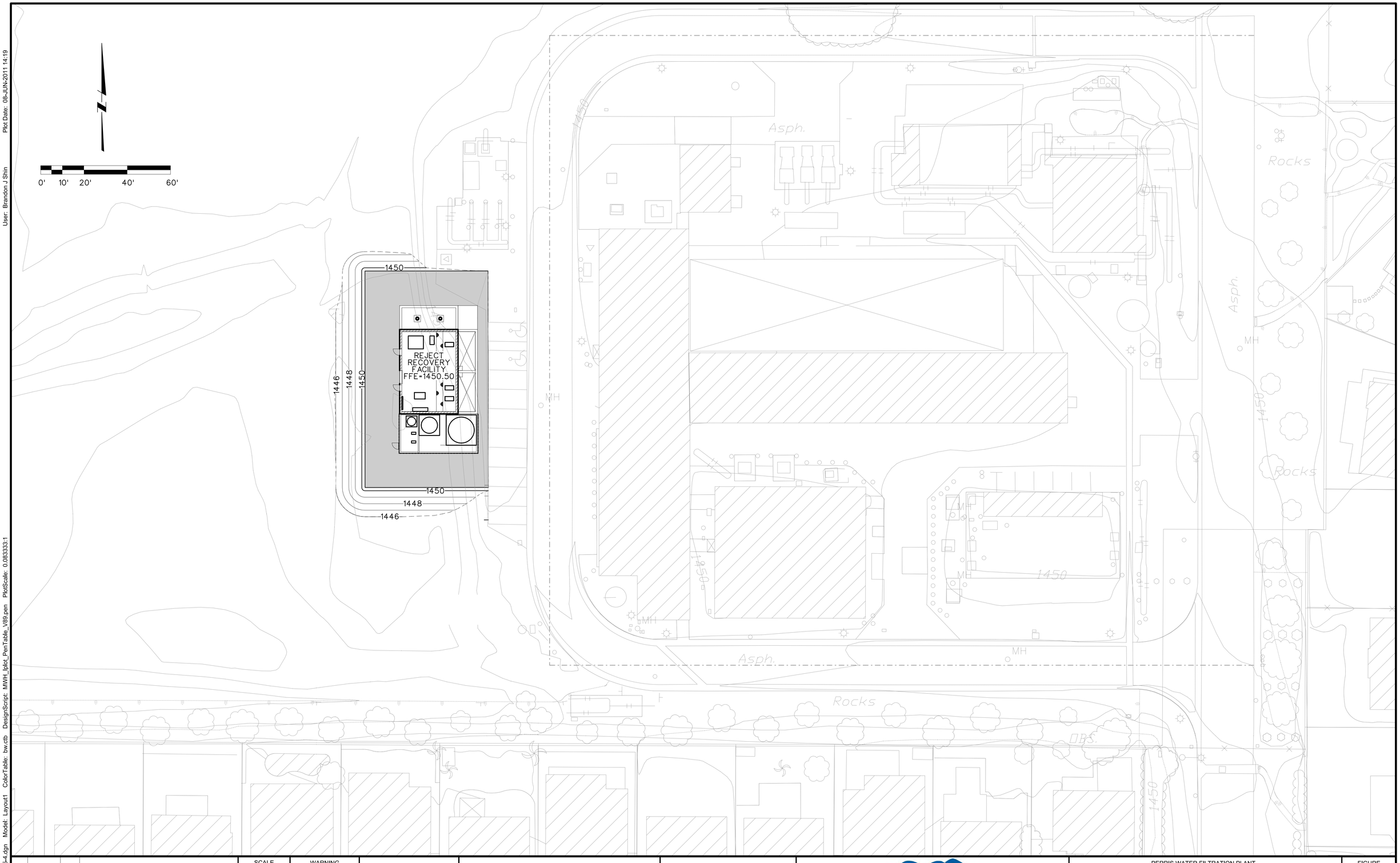

REV	DATE	BY	DESCRIPTION

SCALE
1" = 20'

WARNING
0 ½ 1
IF THIS BAR DOES NOT MEASURE 1" THEN DRAWING IS NOT TO SCALE

DESIGNED G BEHNKE
DRAWN G BEHNKE
CHECKED

NOT FOR CONSTRUCTION
This document is an interim document and not suitable for construction. As an interim document, it may contain data that is potentially inaccurate or incomplete and is not to be relied upon without the express written consent of the preparer.

MWH®

EASTERN MUNICIPAL WATER DISTRICT
SINCE 1950

PERRIS WATER FILTRATION PLANT

OPTION 2
SITE PLAN

FIGURE
5-4
1008058

User: Brandon J Shin
Plot Date: 08-JUN-2011 16:03
PlotScale: 0.083333:1
DesignScript: MWH_Iplot_PenTable_V89.pen
ColorTable: bw.ctb
Model: LAYOUT1
File: EMWD_FIG5-5.dgn

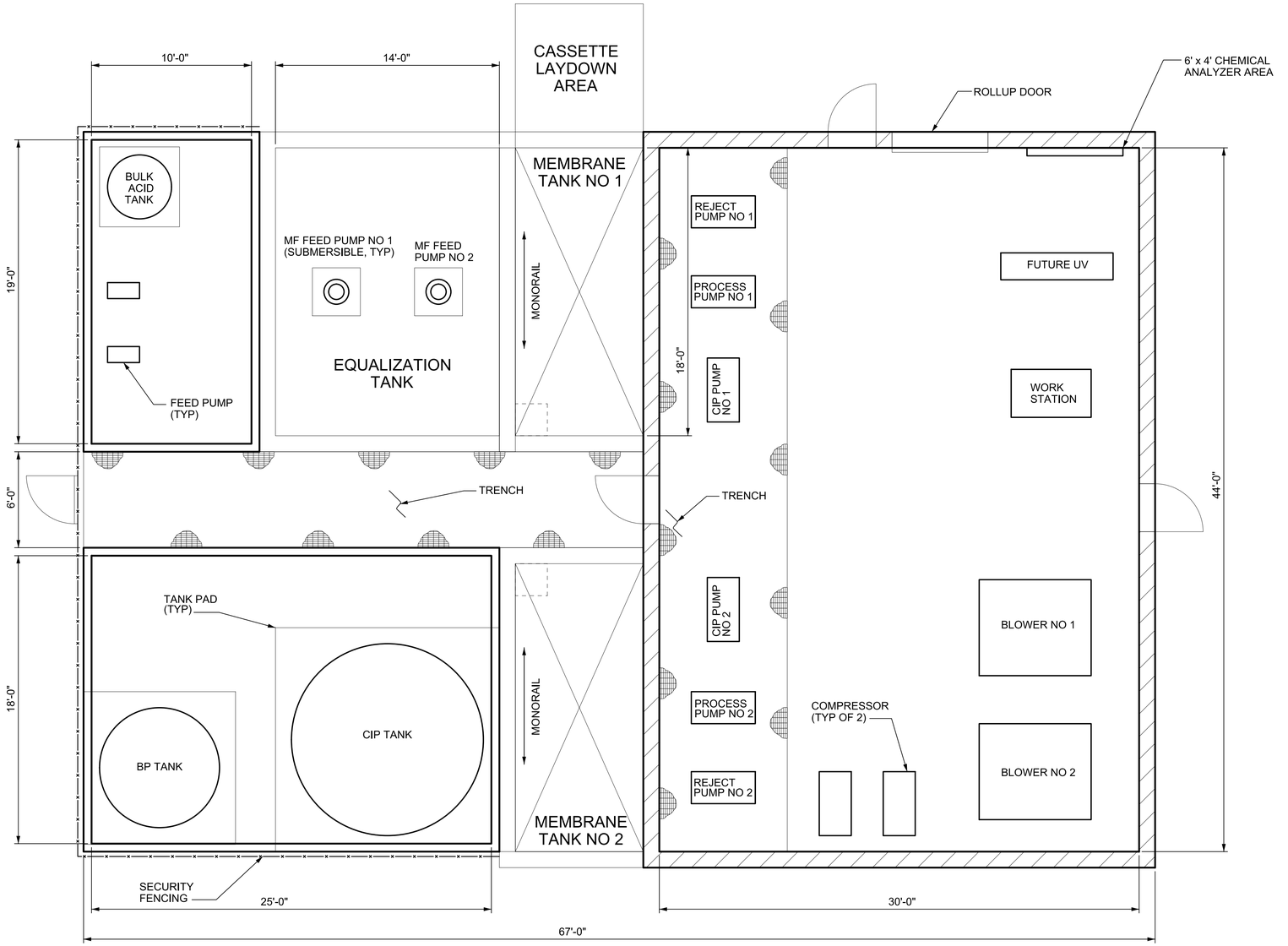

REV	DATE	BY	DESCRIPTION

SCALE: 1/4" = 1'-0"

WARNING: 0 ½ 1 — IF THIS BAR DOES NOT MEASURE 1" THEN DRAWING IS NOT TO SCALE

DESIGNED

DRAWN

CHECKED

NOT FOR CONSTRUCTION

This document is an interim document and not suitable for construction. As an interim document, it may contain data that is potentially inaccurate or incomplete and is not to be relied upon without the express written consent of the preparer.

MWH®

EASTERN MUNICIPAL WATER DISTRICT SINCE 1950

PERRIS WATER FILTRATION PLANT

OPTION 3 RRF LAYOUT

FIGURE 5-5

1008058

User: Brandon J Shin
Plot Date: 08-JUN-2011 14:19
PlotScale: 0.0833333:1
DesignScript: MWH_Iplot_PenTable_V89.pen
ColorTable: bw.ctb
Model: Layout1
File: EMWD_5-6.dgn

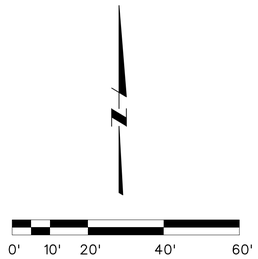

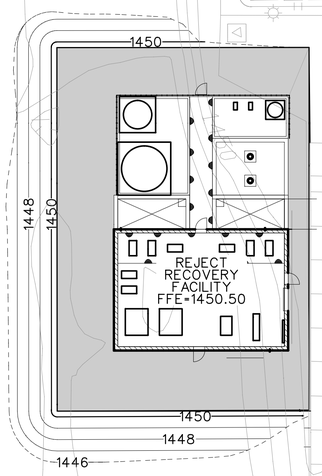

Asph.
Rocks
Asph.
MH
1450
Rocks
MH
MH
1450
MH
Asph.
MH
Rocks
OBS.
1450

REV	DATE	BY	DESCRIPTION

SCALE
1" = 20'

WARNING
0 ½ 1
IF THIS BAR DOES NOT MEASURE 1" THEN DRAWING IS NOT TO SCALE

DESIGNED G BEHNKE
DRAWN G BEHNKE
CHECKED

NOT FOR CONSTRUCTION
This document is an interim document and not suitable for construction. As an interim document, it may contain data that is potentially inaccurate or incomplete and is not to be relied upon without the express written consent of the preparer.

MWH®

EASTERN MUNICIPAL WATER DISTRICT
SINCE 1950

PERRIS WATER FILTRATION PLANT

OPTION 3
SITE PLAN

FIGURE
5-6
1008058

- The membrane tanks will be arranged as a mirror image of each other, sharing the same chemical trench.
- The Reject, Process and CIP pumps will be located inside the building, aligned next to the s membrane tanks. The CIP pumps will be located closest to the feed sumps.
- The required RRF building footprint will be 30 ft by 44 ft; 1,320 square feet.
- The width of the RRF will be dictated by the length of the membrane tanks; whereas the width will be dictated by the layout of equipment inside the building. The RRF will be 67 ft by 44 ft; approximately 3,000 square feet.
- Cassette laydown area will be located next to the road.
- A monorail crane will be used for equipment hoist.
- The canopy will cover the hydrochloric acid facility, the RRF equalization, BP, CIP and membrane tanks.

II.D. Option 4

Figure 5-7 presents the general layout of Option 4 and **Figure 5-8** presents the site plan for Option 4. Key features of Option 4 are as follows:

- To mitigate the possible noise generated from the submersible feed pumps, the RRF Equalization Tank will be "tucked" in the middle of the facility.
- The membrane building will be located on thet south side of the RRF.
- The membrane tanks will be arranged as a mirror image of each other, sandwiched by a "service gallery" where Reject, Process and CIP pumps will be located. The service gallery will be covered with moveable panels keeping the pumps away from the elements.
- The required RRF building footprint will be 20 ft by 34 ft; 680 square feet.
- The width of the RRF will be dictated by the width of the membrane tanks and the layout of the pumps in the service tunnel; whereas the width will be dictated by the length of the membrane tanks and the layout of equipment inside the building. The facility will be 71 ft by 34 ft; approximately 2,420 square feet.
- Cassette laydown area will be located next to the road.
- A traveling bridge will be used for equipment hoist.
- The canopy will cover the hydrochloric acid facility, the RRF equalization, BP, CIP and membrane tanks.

User: Brandon J Shin Plot Date: 08-JUN-2011 16:03
File: EMWD_FIG5-7.dgn Model: LAYOUT1 ColorTable: bw.ctb DesignScript: MWH_Iplot_PenTable_V89.pen PlotScale: 0.0833333:1

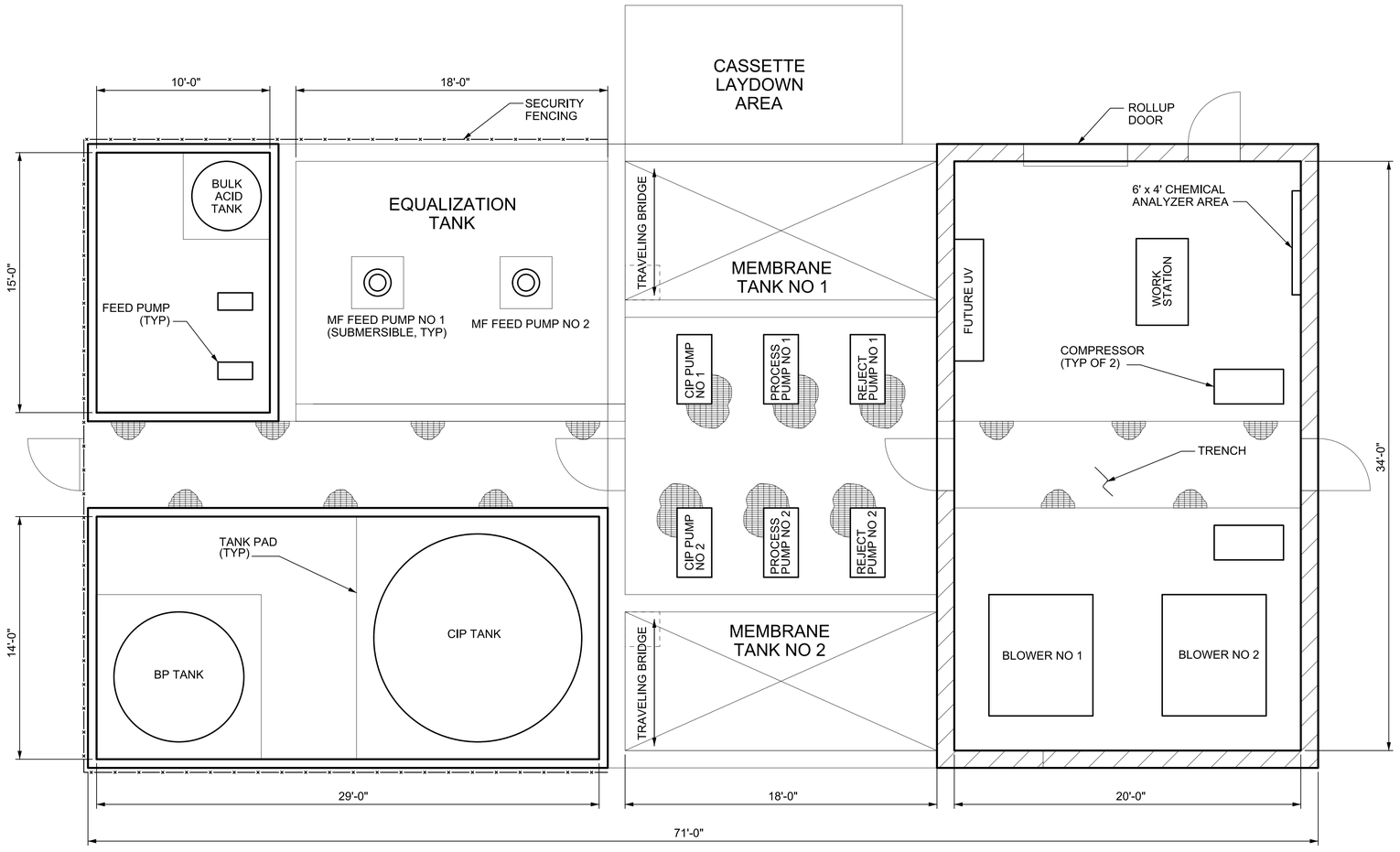

REV	DATE	BY	DESCRIPTION

SCALE: 1/4" = 1'-0"

WARNING: 0 ½ 1 — IF THIS BAR DOES NOT MEASURE 1" THEN DRAWING IS NOT TO SCALE

DESIGNED

DRAWN

CHECKED

NOT FOR CONSTRUCTION

This document is an interim document and not suitable for construction. As an interim document, it may contain data that is potentially inaccurate or incomplete and is not to be relied upon without the express written consent of the preparer.

MWH®

EASTERN MUNICIPAL WATER DISTRICT SINCE 1950

PERRIS WATER FILTRATION PLANT

OPTION 4
RRF LAYOUT

FIGURE 5-7

1008058

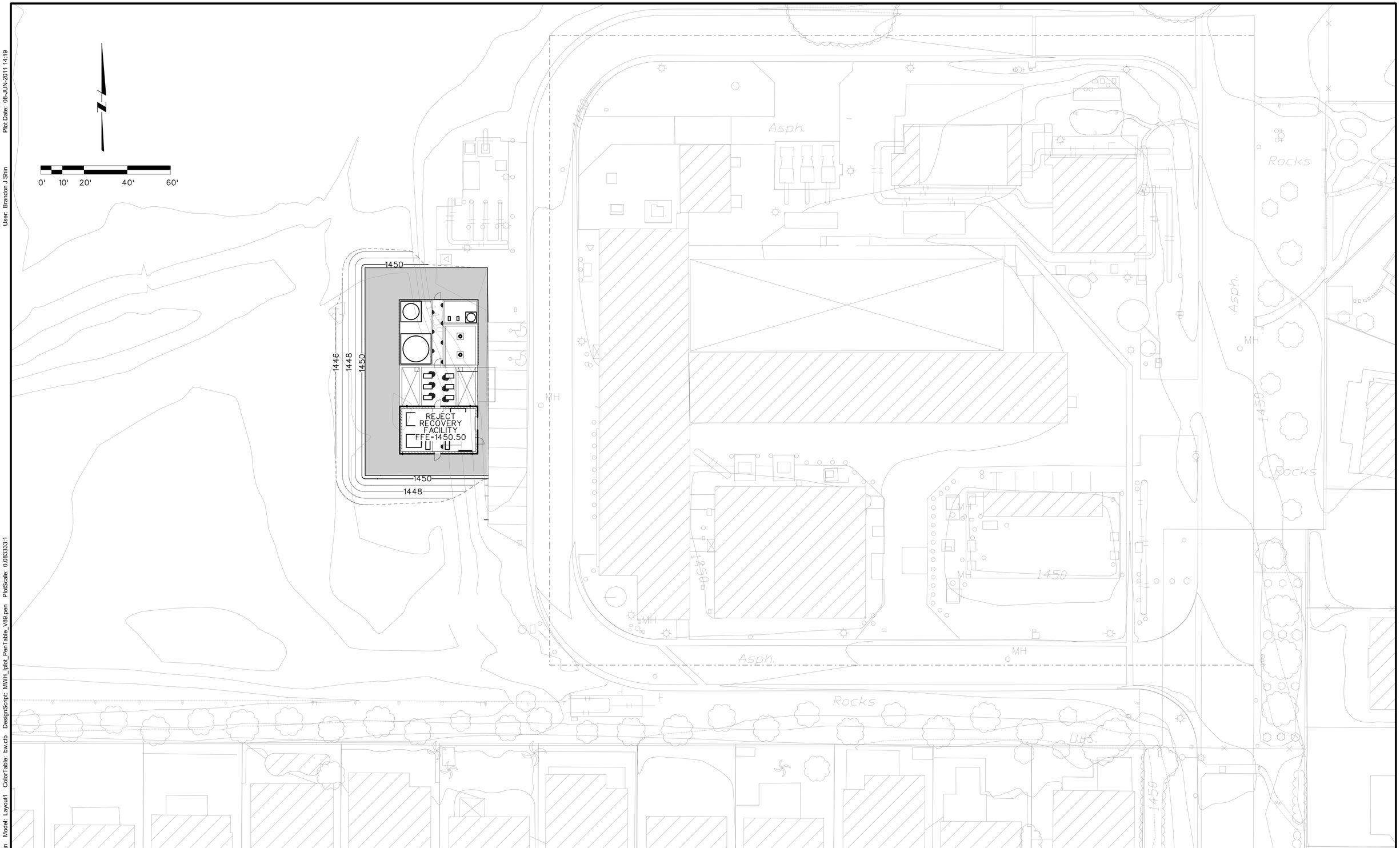

REV	DATE	BY	DESCRIPTION

SCALE
1" = 20'

WARNING
0 ½ 1
IF THIS BAR DOES NOT MEASURE 1" THEN DRAWING IS NOT TO SCALE

DESIGNED G BEHNKE
DRAWN G BEHNKE
CHECKED

NOT FOR CONSTRUCTION
This document is an interim document and not suitable for construction. As an interim document, it may contain data that is potentially inaccurate or incomplete and is not to be relied upon without the express written consent of the preparer.

MWH®

EASTERN MUNICIPAL WATER DISTRICT
SINCE 1950

PERRIS WATER FILTRATION PLANT

OPTION 4
SITE PLAN

FIGURE
5-8
1008058

File: EMWD_5-8.dgn Model: Layout1 ColorTable: bw.ctb DesignScript: MWH_lplot_PenTable_V89.pen PlotScale: 0.083333:1
User: Brandon J Shin Plot Date: 08-JUN-2011 14:19

II.E. Comparison of Options

Table 5-1 below summarizes the advantages and disadvantages of the options.

Table 5-1
Comparison of RRF Layout Options

Layout	Advantages	Disadvantages
Option 1 (Opt-1)	• Easy accessibility for chemical loading and cassette	• Long CIP discharge piping • Second largest building of 4 options • Most extensive civil work of 4 options • Noise from RRF equalization pumps, being most south, could be an issue to neighbors
Option 2 (Opt-2)	• Use of monorail crane for removal of cassette • Easy accessibility for chemical loading and cassette • Second smallest building of 4 options • Second least civil work of 4 options	• Noise from RRF equalization pumps, being most south, could be an issue to neighbors
Option 3 (Opt-3)	• Use of monorail crane for removal of cassette • Easy accessibility for chemical loading and cassette • Neighbor friendly with pumps inside the building	• Largest building of 4 options • Second most extensive civil work of 4 options • Cassette laydown area overlaps with parking spots - could cause inconvenience occasionally
Option 4 (Opt-4)	• Neighbor friendly with RRF equalization pumps away from neighbors • Smallest building footprint of 4 options Bridge crane can also be used for pumps • Least civil work of 4 options	• Pump noise may be amplified, and could be a source of noise for neighbors • Pumps located in less protected environment • Cassette laydown area overlaps with parking spots - could cause inconvenience occasionally

Option 1 has the most disadvantages of the four options and will not be further considered. Of the three remaining options, the major differences are in the size of the building and canopy, and the amount of earthwork required creating a leveled building pad. For these reasons, the cost comparison of the three options can be based on these issues alone. Concrete, piping, and other items are very similar, and the membrane

equipment is identical, so these items are common to all options and can be excluded from a cost comparison.

Table 5-2 summarizes the building, RRF and canopy footprints, and the amount of fill required for each layout, as well as a comparison of cost differences between the options.

Table 5-2
Building, RRF and Canopy Footprints, and Amount of Fill Required

	Unit	Option 1	Option 2	Option 3	Option 4
Building Footprint	sq ft	1,200	925	1,320	680
Facility footprint	sq ft	3,496	2,448	2,948	2,414
Fill Volume	cu yd	962	767	889	723
Canopy Footprint	sq ft	990(4)	963(4)	1,628(5)	1,734(5)
Building Cost		$300,000	$231,250	$330,000	$170,000
Fill Cost		$33,663	$26,845	$31,126	$25,305
Canopy Cost		$99,000	$96,300	$162,800	$173,400
Total Building and Fill Cost		$432,663	$354,395	$523,926	$368,705

Notes:
(1) Range of unit building cost: $150-$350/sq ft; assumed 250/sq ft
(2) Range of unit fill cost: $25-$35/cu yard for small quantity of imported dirt; assumed $35/cu yd
(3) Assumed unit canopy cost of $100/sq ft
(4) Canopy will cover the hydrochloric acid facility, the RRF BP, CIP and membrane tanks.
(5) Canopy will cover the hydrochloric acid facility, the RRF equalization, BP, CIP and membrane tanks.

The cost differences between Options 2, 3 and 4 are relatively small (less than $170,000) in contrast to the overall facility estimate of roughly $5 million, so cost alone is not sufficient for selection. Options 2, 3 and 4 are comparable in terms of accessibility and ease of operations, as well as the facility footprint and required fill volumes.

Although it provides better accessibility and flexibility for final design, Option 3 has the largest building footprint of the remaining three options. Option 4 has the smallest building footprint but the reject, permeate and CIP pumps will be under moveable covers and not fully protected within the building. Option 2 has the least number of apparent disadvantages as compared to Options 3 and 4. The noise from the RRF equalization pumps could be a non-issue given that the RRF is located farther north, away from the neighbors.

II.F. Recommendation

Option 2 is recommended for the following reasons:

- The RRF building will be easily accessible from existing road and control room.
- Cost is favorable.
- The reject, CIP and permeate pumps will be in the RRF building, next to the membrane tanks.
- All reject, CIP and permeate pumps will be inside the RRF building.
- A monorail crane will be provided as the equipment hoist system and a cheaper hoist system than the traveling bridge

Upon EMWD's confirmation of recommended layout, detailed elevation view of the RRF will be developed and final grade elevation will be confirmed.

CHAPTER 6
PROJECT IMPLEMENTATION

PART I. INTRODUCTION

This chapter discusses the Class "4" Opinion of Probable Construction Cost (OPCC) and construction schedule for the RRF.

PART II. OPINION OF PROBABLE CONSTRUCTION COST (OPCC)

The information presented in this report was used to generate a Class "4" Opinion of Probable Construction Cost (OPCC) which is prepared in accordance with the cost estimate classes defined by the Association for the Advancement of Cost Engineering [Class 4], set forth in **Appendix 6-A**. The definition of Class "4" OPCC is defined below:

> *AACE International CLASS 4 Cost Estimate – Class 4 estimates are generally prepared based on limited information and subsequently have fairly wide accuracy ranges. Typically, engineering is 10% to 40% complete. They are typically used for project screening, determination of feasibility, concept evaluation, and preliminary budget approval. Virtually all Class 4 estimates use stochastic estimating methods such as cost curves, capacity factors, and other parametric and modeling techniques. Expected accuracy ranges are from –15% to –30% on the low side and +20% to 50% on the high side, depending on the technological complexity of the project, appropriate reference information, and the inclusion of an appropriate contingency determination. Ranges could exceed those shown in unusual circumstances.*

The OPCC for Option 2 is $5 million and details of the estimates are provided on the following page. The OPCC includes the negotiated membrane equipment price plus a 10% net design adjustment allowance for minor changes in the scope of equipment supply, such as the use of all electric valve actuators and the use of positive displacement blowers. The OPCC also includes a 5% contingency for unlisted items allowance to account for known but not priced miscellaneous details, and 15% contingency for scope refinement during final design.

As discussed in **Chapter 5**, the cost differences between Options 2, 3 and 4 are less than 3.5% of the overall facility estimate of $5 million and within the accuracy range of Class 4 OPCC. Cost alone is therefore not sufficient for selection of the layout option.

PART III. PROJECT SCHEDULE

Figure 6-1 presents the current project base schedule. The projected commissioning date (when the RRF will be substantially completed and producing water) is March 26, 2013 and the construction will be completed by May 21, 2013. The schedule is based on the following basis:

- 4 months of Membrane Equipment Fabrication and Delivery
- 4 months of Equipment Installation
- 1.5 months of Commissioning
- 1 month of Plant Optimization

The major milestones are summarized as follows:

Value Engineering Workshop	August 22, 2011 through August 24, 2011
Final Design Completion	December 2, 2011
Award of Construction Contract	April 4, 2012
Notice to Proceed	April 25, 2012
Commissioning	March 26, 2013
Construction Complete	May 21, 2013

The Contractor will be required to issue the Notice-To-Fabricate to GE within two weeks of the Notice-to-Proceed and send a copy of the Notice-To-Fabricate to EMWD.

MWH
Arcada, CA

JLL
6/9/2011

Eastern Municipal Water District
Perris Water Filtration Plant
(Option #2)

Opinion of Probable Construction Costs

Currency: USD-United States-JUNE 2011 Dollar

Grand Total Price: $ 5,000,000

Item #	GC	Description	Quantity	UOM	Unit Price	Total Price	Comments
		New Filtration Plant			$239	**$3,204,621**	82%
1	S	Site Removals/Clearing/OG Compaction	1	dy	$2,500	$2,500	0.2 AC
2	S	Place/Compact Imported Fill	1,000	cy	$15.00	$15,000	
3	S	Place/Compact Crushed Base Course - 1'	120	cy	$45.00	$5,400	
4	S	Concrete SOG - 6"	40	cy	$300	$11,939	
5	S	Concrete Containment Walls - 6"	8	cy	$600	$4,783	
6	S	Concrete Equipment Pads - 6"	22	cy	$600	$12,939	
7	S	Concrete Membrane/EQ Basin Tanks - 6"	31	cy	$600	$18,444	
8	S	Cassette Laydown Area	2	cy	$400	$741	
9	S	Reinforcing Steel	17,800	lb	$1.00	$17,800	
10	S	Pre-Engineered Metal Building	925	sf	$85	$78,625	8" reinforced
11	S	Extr HM Steel Door	2	ea	$1,300	$2,600	
12	S	Roll-up Door	1	ea	$8,500	$8,500	manual, 6x9
14	S	CSI Divisions 4-14	1	ls	$42,000	$42,000	metals, coatings, furnishings, eyewash, etc.
15	S	Canopy	1,000	sf	$50	$50,000	
16	S	Monorail Hoist	1	LF	$25,000	$25,000	
17	P	*Mechanical*					
18	P	Membrane System Equipment	1	ls	$1,800,000	$1,800,000	budget quote
19	P	Chemical Feed Pumps	2	ea	$8,500	$17,000	5 hp
20	p	Hydrochloric Acid Tank	1	ea	$3,750	$3,750	600 gal
21	P	Process Piping / Valving Allowance	1	ls	$50,000	$50,000	matls only
22	P	Peristalic Pumps	10	ea	$8,500	$85,000	at existing facilities, 5 hp
23	P	Mechanical Install Crew	1	ls	$338,400	$338,400	Say 4 mos with 6 man crew
24	P	Electrical / I&C Allowance	1	ls	$520,000	$520,000	Say 20% of running total
25	P	Yard Piping Allowance	400	lf	$180	$72,000	10-12"
26	P	Asphalt Paving Allowance	1,800	sf	$4.00	$7,200	4" Base/2" AC
27	P	Site Landscaping Allowance	1	ls	$15,000	$15,000	minor
		Startup/Commission/Owner Training				**$52,500**	1%
1	P	Startup Crew	21	dys	$2,500	$52,500	test/punch list
2	S	Vendor Commissioning	1	ls	$0	$0	included in equip budget
					Running Subtotal:	**$3,257,120**	
		Mobilization/Field Oversight Expenses				**$325,462**	8%
1	P	Contractor General Conditions (Prime)	1	ls	10%	$295,835	misc field indirects
2	S	Contractor General Conditions (Subcontractor)	1	ls	10%	$29,627	ditto
		Parametric Contingency				**$342,856**	9%
1	P	Unlisted Items Allowance	1	ls	5%	$162,856	known, but not priced, misc details, estimating accuracy
1	P	Net Design Adjustment Allowance	1	ls	10%	$180,000	on GE equipment scope
					Running Subtotal:	**$3,925,438**	100%
		Markups				**$666,758**	
1	S	Subcontractor Markups	1	ls	12.0%	**$39,108**	H/O Overheads, Job Fee & Risk, insur, bond
2	P	Prime Contractor OH&P on Subs	1	ls	5.0%	**$18,250**	Oversight + Risk
3	P	Prime Contractor OH&P on Self-Perform	1	ls	10.0%	**$341,700**	Job Fee + Risk
4	P	Contractor Insurance Program	1	ls	2.5%	**$108,100**	Performance/Payments Bonds, Genl Liability, & Bldr's Risk
5	P	State Sales Taxes	1	ls	9.0%	**$159,600**	CA Sales Tax on Matls Only (40%)
6	P	Escalation	1	ls	0.0%	**$0**	Excluded
					Running Subtotal:	**$4,592,200**	Total Estimated Constr Costs w/o contingency
			MU Factor:	1.170			
		Project Administration & Management				**$418,800**	
1	--	Construction Oversight & Mgt	1	ls	0%	**$0**	Excluded
2	--	Engineering	1	ls	0%	**$0**	ditto
3	--	Engineering During Construction	1	ls	0%	**$0**	ditto
4	--	Misc Owner's Soft Costs (All)	1	ls	0%	**$0**	ditto
5	--	Land Acquisition	1	ls	0%	**$0**	ditto
6	--	Scope Contingency/Market Conditions	1	ls	15%	**$418,800**	Scope definition/market allowance/ on non GE scope only
7	--	Interest During Construction	1	ls	0%	**$0**	Excluded, allowance for financing costs
8	--	Owner's Construction Contingency/Mgt Reserve	1	ls	0%	**$0**	Excluded, allowance for changed field conditions
					Grand Total:	**$5,000,000**	Total Estimated Constr Costs w/ Contingency

MWH
Arcada, CA

JLL
6/9/2011

Eastern Municipal Water District
Perris Water Filtration Plant
(Option #2)

Opinion of Probable Construction Costs

Currency: USD-United States-JUNE 2011 Dollar

Grand Total Price: $ 5,000,000

Item #	GC	Description	Quantity	UOM	Unit Price	Total Price	Comments
				Cost Range:	**$3,700,000**	**$5,500,000**	Per AACE cost estimate guidelines
					Total Contingency:	**$418,800**	8%

Assumptions:

1) Bypass piping system not required to install new exchanger.
2) Local disposal w/o treatment for dewatering volume.
3) Large crane can access the equipment with minimum boom and clearence.

Qualifications:

1) This OPCC is classified as a Class 4 cost estimate per AACE guidelines. Stated accuracy range = -20% to + 20%
2) Pricing basis = 2nd Qtr 2011, escalation to midpoint of construction is considered included
3) P=Prime, S=Subcontractor
4) Pricing assumes competitive market conditions at time of tender (+3 bidders/trade).
5) Owner soft costs and project management expenses excluded.
6) Capital spare parts not included.
7) Special Inspections not included.
8) Permit Fees excluded

OPCC Disclaimer

The client hereby acknowledges that MWH has no control over the costs of labor, materials, competitive bidding environments, unidentified field conditions, financial and/or commodity market conditions, or any other factors likely to affect the OPCC of this project, all of which are and will unavoidably remain in a state of change, especially in light of high market volatility attributable to Acts of God and other market forces or events beyond the control of the parties. As such, Client recognizes that this OPCC deliverable is based on normal market conditions, defined by stable resource supply/demand relationships, and does not account for extreme inflationary or deflationary market cycles. Client further acknowledges that this OPCC is a "snapshot in time" and that the reliability of this OPCC will degrade over time. Client agrees that MWH cannot and does not make any warranty, promise, guarantee or representation, either express or implied that proposals, bids, project construction costs, or cost of O&M functions will not vary significantly from MWH's good faith Class 4 OPCC

AACE International CLASS 4 Cost Estimate - Class 4 estimates are generally prepared based on limited information and subsequently have fairly wide accuracy ranges. Typically, engineering is 10% to 40% complete. They are typically used for project screening, determination of feasibility, concept evaluation, and preliminary budget approval. Virtually all Class 4 estimates use stochastic estimating methods such as cost curves, capacity factors, and other parametric and modeling techniques. Expected accuracy ranges are from -15% to -30% on the low side and +20% to 50% on the high side, depending on the technological complexity of the project, appropriate reference information, and the inclusion of an appropriate contingency determination. Ranges could exceed those shown in unusual circumstances. As little as 20 hours or less to perhaps more than 300 hours may be spent preparing the estimate depending on the project and estimating methodology (AACE International Recommended Practices and Standards).

Perris Water Filtration Plant Reject Recovery Facility Preliminary and Final Design

ID	Task Name	Duration	Start	Finish	Baseline Cost	Physical % Complete	Predecessors
1	**Task 1: Project Management**	**567 days**	**Mon 1/4/10**	**Tue 3/6/12**	**$72,851.00**	**0%**	
2	Notice to Proceed	0 days	Tue 1/5/10	Tue 1/5/10	$0.00	0%	
3	**1.A Kickoff Meeting**	0 days	Mon 1/4/10	Mon 1/4/10	$3,639.00	100%	2
4	**1.B Monthly Coordination Mtgs**	**315 days**	**Wed 12/22/10**	**Tue 3/6/12**	**$28,912.00**	**100%**	121FF
5	**1.C Safety Pre-Use Analysis Workshop - 1**	0 days	Fri 7/15/11	Fri 7/15/11	$1,893.00	0%	62FS+10 days
6	**1.C Safety Pre-Use Analysis Workshop - 2**	0 days	Fri 11/4/11	Fri 11/4/11	$1,893.00	0%	101
7	**1.D Water Enterprise Team Workshop - 1**	0 days	Fri 7/8/11	Fri 7/8/11	$3,896.50	0%	62FS+5 days
8	**1.D Water Enterprise Team Workshop - 2**	0 days	Fri 11/18/11	Fri 11/18/11	$3,896.50	0%	101FS+10 days
9	**1.E Operations Workshop**	0 days	Fri 11/18/11	Fri 11/18/11	$3,686.00	0%	101FS+10 days
10	**1.F Administration**	**315 days**	**Wed 12/22/10**	**Tue 3/6/12**	**$12,751.00**	**100%**	121FF
11	**1.G Quality Control**	**315 days**	**Wed 12/22/10**	**Tue 3/6/12**	**$4,330.00**	**60%**	121FF
12	**Task 2: Preliminary Design**	**395 days**	**Tue 1/5/10**	**Mon 7/11/11**	**$129,396.00**	**0%**	2
13	**2.A Data Gathering and Analysis**	15 days	Mon 1/11/10	Fri 1/29/10	**$6,148.00**	**0%**	
18	**2.B Low Pressure Membrane Filtration Selection**	147 days	Thu 2/11/10	Fri 9/3/10	**$27,190.00**	**0%**	
47	**2.C Site Selection and Yard Piping**	73 days	Tue 1/5/10	Thu 4/15/10	**$63,148.00**	**0%**	
56	**2.D Prepare Preliminary Design Report (PDR)**	223 days	Thu 9/2/10	Mon 7/11/11	**$25,501.00**	**0%**	
57	2.D.1 PDR - Draft	212 days	Thu 9/2/10	Mon 6/27/11	$16,278.00	0%	
58	PDR - Draft	202 days	Thu 9/2/10	Fri 6/10/11	$0.00	55%	43
59	District Review (1 week)	5 days	Mon 6/13/11	Fri 6/17/11	$0.00	0%	58
60	District Review Due / Review Meeting	0 days	Mon 6/27/11	Mon 6/27/11	$0.00	0%	59
61	2.D.2 PDR - Final	11 days	Mon 6/27/11	Mon 7/11/11	$8,304.00	0%	
62	Incorporation of Comments	5 days	Mon 6/27/11	Fri 7/1/11	$0.00	0%	60
63	Final Submittal - PDF	0 days	Fri 7/1/11	Fri 7/1/11	$0.00	0%	62
64	District Backcheck	3 days	Mon 7/4/11	Wed 7/6/11	$0.00	0%	63
65	Final Submittal	3 days	Thu 7/7/11	Mon 7/11/11	$0.00	0%	64
66	2.D.3 PDR QA/QC	193 days	Mon 10/11/10	Wed 7/6/11	$919.00	0%	58SS,64FF
67	PDR Workshop	0 days	Fri 7/8/11	Fri 7/8/11	$0.00	0%	62FS+5 days
68	**2.E Permit Assistance**	175 days	Thu 9/2/10	Wed 5/4/11	$7,410.00	0%	57SS
69	**Task 3: Final Design**	**327 days**	**Thu 9/2/10**	**Fri 12/2/11**	**$180,892.00**	**0%**	
70	**3.A Pre-Negotiations Proposals**	**144 days**	**Thu 9/2/10**	**Tue 3/22/11**	**$15,896.00**	**0%**	43
81	**GE Submittals**	**97 days**	**Tue 3/22/11**	**Wed 8/3/11**	**$0.00**	**0%**	76
82	PO issued by EMWD	0 days	Tue 3/22/11	Tue 3/22/11	$0.00	100%	
83	1st Submittal	33 days	Tue 3/22/11	Thu 5/5/11	$0.00	0%	82
84	1st Submittal Workshop	2 days	Fri 5/6/11	Mon 5/9/11	$0.00	0%	83
85	1st Submittal - Client comments	7 days	Tue 5/10/11	Wed 5/18/11	$0.00	0%	84
86	2nd Submittal	64 days	Tue 3/22/11	Fri 6/17/11	$0.00	0%	82
87	2nd Submittal Workshop	2 days	Mon 6/20/11	Tue 6/21/11	$0.00	0%	86
88	2nd Submittal - Client Comments	6 days	Wed 6/22/11	Wed 6/29/11	$0.00	0%	87
89	3rd submittal (Final)	89 days	Tue 3/22/11	Fri 7/22/11	$0.00	100%	82

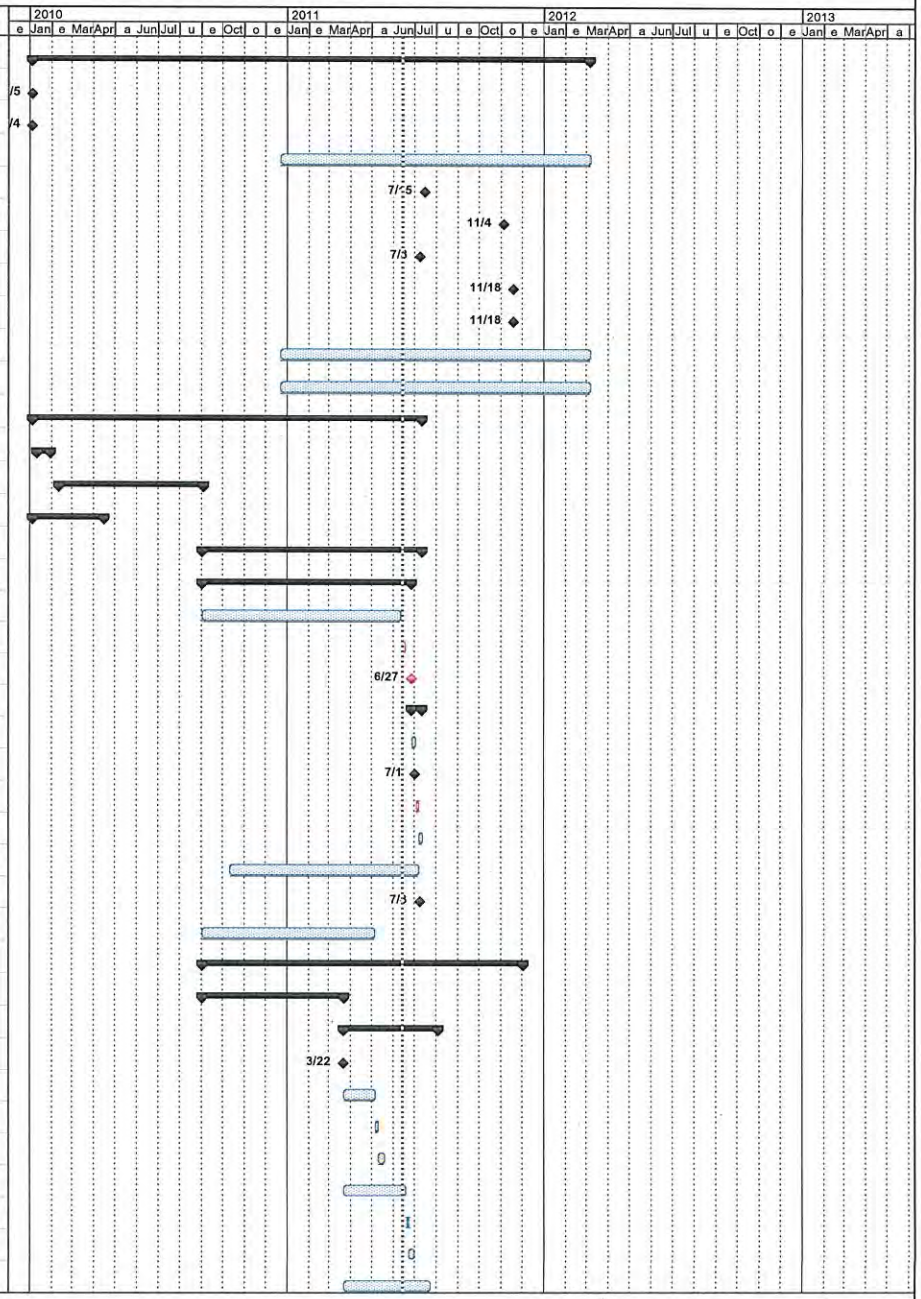

Date: Mon 6/13/11

Task | Progress | Summary | External Tasks | Split

Split | Milestone | Project Summary | External MileTask

FIGURE 6.1 PROJECT BASE SCHEDULE

Perris Water Filtration Plant Reject Recovery Facility Preliminary and Final Design

ID	Task Name	Duration	Start	Finish	Baseline Cost	Physical % Complete	Predecessors
90	3rd Submittal Workshop	2 days	Mon 7/25/11	Tue 7/26/11	$0.00	0%	89
91	3rd submittal - Client Comments	6 days	Wed 7/27/11	Wed 8/3/11	$0.00	0%	90
92	**3.B Process Design**	102 days	Thu 7/14/11	Fri 12/2/11	$9,691.00	0%	56,105FF
93	**3.C Design Coordination**	102 days	Thu 7/14/11	Fri 12/2/11	$5,856.00	0%	56,105FF
94	**3.D Preparation of Contract Documents**	115 days	Mon 6/27/11	Fri 12/2/11	**$149,450.00**	0%	
95	3.D.1 Design Development Submittal (50%)	35 days	Mon 6/27/11	Fri 8/12/11	$60,864.00	0%	60
96	District Review (2 weeks)	13 days	Mon 8/15/11	Wed 8/31/11	$0.00	0%	95
97	Design Review Workshop (50%) / District Review Due	0 days	Wed 8/31/11	Wed 8/31/11	$3,976.50	0%	130
98	3.D.2 Construction Document Development (90%)	35 days	Thu 9/1/11	Wed 10/19/11	$31,706.00	0%	97
99	90% Review Design Workshop	1 day	Thu 10/20/11	Thu 10/20/11	$0.00	0%	98
100	District Review (2 weeks)	11 days	Fri 10/21/11	Fri 11/4/11	$0.00	0%	99
101	Design Review Workshop (90%) / District Review Due	0 days	Fri 11/4/11	Fri 11/4/11	$3,976.50	0%	100
102	3.D.3 Final Construction Document (100%)	15 days	Mon 11/7/11	Fri 11/25/11	$21,388.00	0%	101
103	Final Submittal - PDF	0 days	Fri 11/25/11	Fri 11/25/11	$0.00	0%	102
104	District Backcheck	5 days	Mon 11/28/11	Fri 12/2/11	$0.00	0%	103
105	Final Submittal	0 days	Fri 12/2/11	Fri 12/2/11	$0.00	0%	104
106	3.D.4 Site Walk	0 days	Fri 11/4/11	Fri 11/4/11	$8,022.00	0%	101
107	3.D.5 Final Design QA/QC	87 days	Thu 7/28/11	Fri 11/25/11	**$19,403.00**	0%	
111	3.D.6 Cost Estimates	36 days	Fri 10/7/11	Fri 11/25/11	$8,067.00	0%	102FF
112	Bid Preparation (30 calendar days)	23 days	Mon 12/5/11	Wed 1/4/12	$0.00	0%	105
113	Initial Stakeholder Approval Process	0 days	Wed 10/26/11	Wed 10/26/11	$0.00	0%	115FF-50 days
114	**Task 4: Bidding Support**	**65 days**	**Wed 1/4/12**	**Wed 4/4/12**	**$21,797.00**	0%	
115	Bid Advertisement	0 days	Wed 1/4/12	Wed 1/4/12	$0.00	0%	112
116	**Bid Period (45 calendar days)**	**34 days**	**Thu 1/5/12**	**Tue 2/21/12**	**$0.00**	0%	**115**
117	**4.A Bid Process (Pre-Bid Meeting, Tech Support, Response to Questions)**	34 days	Thu 1/5/12	Tue 2/21/12	$3,079.00	0%	
118	**4.B Addendum Preparation**	10 days	Wed 2/8/12	Tue 2/21/12	$15,900.00	0%	117FF
119	Bid Opening	0 days	Tue 2/21/12	Tue 2/21/12	$0.00	0%	117FF
120	**Bid Review/Award**	**31 days**	**Wed 2/22/12**	**Wed 4/4/12**	**$0.00**	0%	
121	**4.C Preparation of Contractor Recommendation Letter**	10 days	Wed 2/22/12	Tue 3/6/12	$2,818.00	0%	119
122	Approved by Engr & Ops Committee	0 days	Mon 3/26/12	Mon 3/26/12	$0.00	0%	121FS+14 days
123	Approval by EMWD Board - Award of Contract	0 days	Wed 4/4/12	Wed 4/4/12	$0.00	0%	122FS+7 days
124	**Task 5: Value Engineering**	**33 days**	**Fri 7/15/11**	**Wed 8/31/11**	**$22,081.00**	0%	
125	EMWD to initiate PDR VE Workshop	0 days	Fri 7/15/11	Fri 7/15/11	$0.00	0%	95FF-20 days
126	**5.A PDR VE Workshop Material Preparation**	0 days	Fri 8/12/11	Fri 8/12/11	$3,165.50	0%	95
127	PDR VE Review Period	5 days	Mon 8/15/11	Fri 8/19/11	$0.00	0%	126
128	**5.B PDR VE Workshop Participation**	3 days	Mon 8/22/11	Wed 8/24/11	$3,259.50	0%	127
129	**5.C Evaluate PDR VE Recommendation**	5 days	Thu 8/25/11	Wed 8/31/11	$4,615.50	0%	128
130	PDR VE Recommendation Review Meeting	0 days	Wed 8/31/11	Wed 8/31/11	$0.00	0%	129

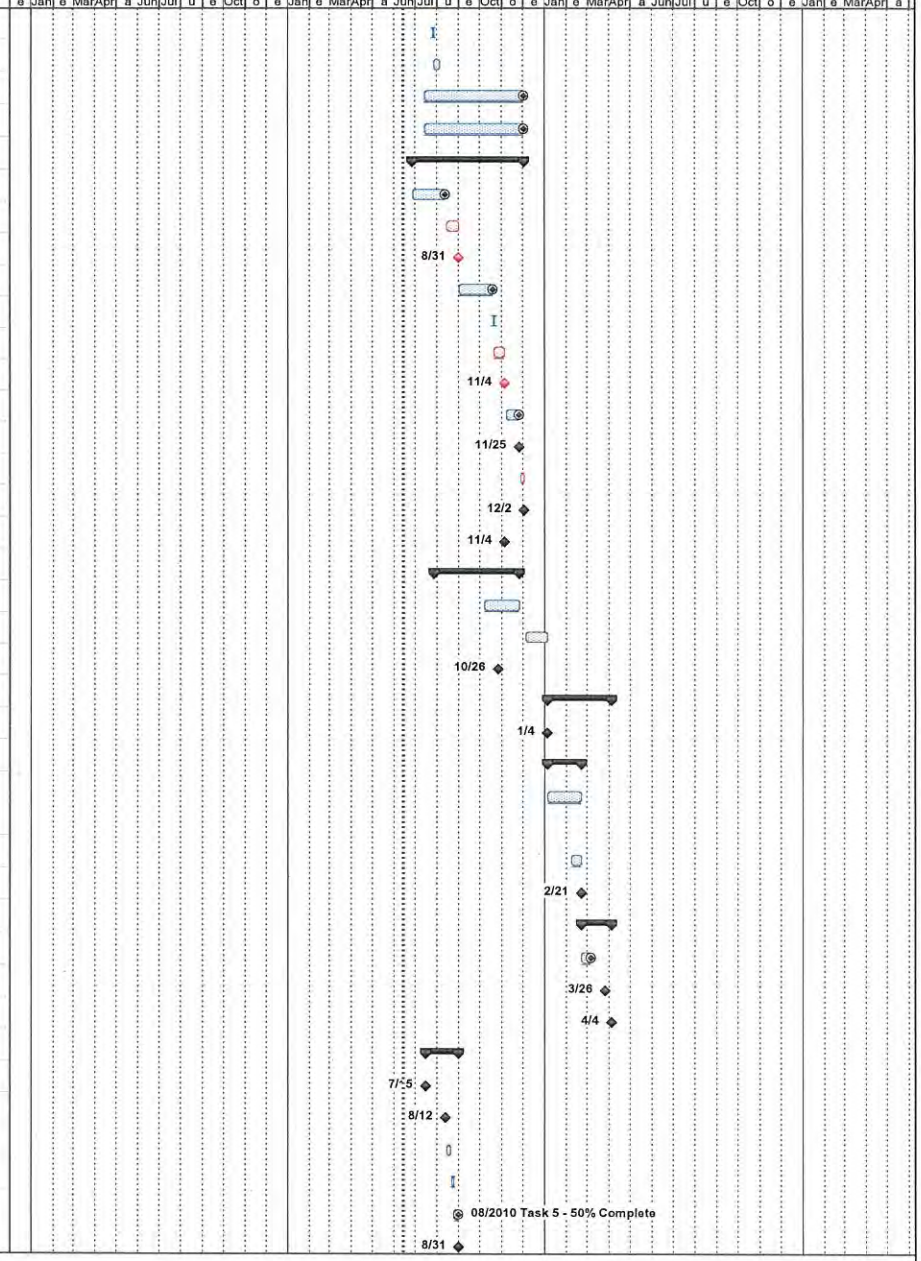

Date: Mon 6/13/11

Task | Progress | Summary | External Tasks | Split
Split | Milestone | Project Summary | External MileTask

FIGURE 6.1 PROJECT BASE SCHEDULE

Perris Water Filtration Plant Reject Recovery Facility Preliminary and Final Design

ID	Task Name	Duration	Start	Finish	Baseline Cost	Physical % Complete	Predecessors
131	Task 6: Coordination with CDPH	131 days	Fri 12/24/10	Fri 6/24/11	$17,428.00	95%	58FF+10 days
132	**Task 7: LRP**	**150 days**	**Thu 2/11/10**	**Wed 9/8/10**	**$23,492.00**	**50%**	**50SS**
133	**Construction**	**294 days**	**Thu 4/5/12**	**Tue 5/21/13**	**$0.00**	**0%**	
134	Construction Start - NTP	15 days	Thu 4/5/12	Wed 4/25/12	$0.00	0%	123
135	Contractor to issue Notice for Fabrication to GE	10 days	Thu 4/26/12	Wed 5/9/12	$0.00	0%	134
136	Contractor to issue PO for pipe, tanks and appurtenances	10 days	Thu 4/26/12	Wed 5/9/12	$0.00	0%	134
137	Membrane Equipment Delivery (4-6 months)	109 days	Thu 5/10/12	Tue 10/9/12	$0.00	0%	135
138	Installation (4-6 months, assume 4 months)	90 days	Wed 10/10/12	Tue 2/12/13	$0.00	0%	137
139	Commissioning (1.5 months)	30 days	Wed 2/13/13	Tue 3/26/13	$0.00	0%	138
140	Plant Optimization (1 month)	20 days	Wed 3/27/13	Tue 4/23/13	$0.00	0%	139
141	Construction Complete (1 month punch list)	20 days	Wed 4/24/13	Tue 5/21/13	$0.00	0%	140

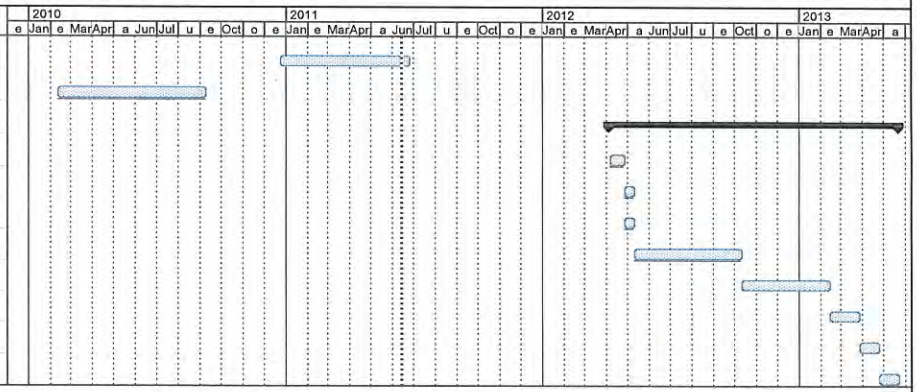

Date: Mon 6/13/11

Task | Progress | Summary | External Tasks | Split

Split | Milestone | Project Summary | External MileTask

FIGURE 6.1 PROJECT BASE SCHEDULE

Appendix ES-A

Meeting Minutes dated June 27, 2011; August 4, 2011; August 30, 2011; September 26, 2011 and October 11, 2011

MEETING MINUTES

Meeting Date: June 27, 2011
Meeting Time: 9:00 am – 12:00 pm
Meeting Location: EMWD Conference Room
Meeting Topic: PDR Review and GE 60% Engineering Submittal Workshop

ATTENDEES

Name	With	Phone	Email
John Dotinga	EMWD	951-928-3777 ext 7301	dotingaj@emwd.org
Dave Brown	EMWD	951-928-3777 ext 6269	browne@emwd.org
Jeff Allred	EMWD	951-928-3777 ext 4296	allredjeff@emwd.org
Greg Kowalski	EMWD	951-928-3777 ext 4466	kowalskig@emwd.org
Joe Mouawad	EMWD	951-928-3777 ext 4463	mouawadj@emwd.org
Khos Ghaderi	EMWD	951-928-3777 ext 6240	ghaderik@emwd.org
Jim Borchardt	MWH	626-568-6283	James.Borchardt@mwhglobal.com
Pei-Chin Low	MWH	626-568-6999	Pei-Chin.Low@mwhglobal.com
Jamal Awad	MWH	312-831-3824	Jamal.Awad@mwhglobal.com
Tim Fisher-Kane	GE	760-305-0145	Timothy.Kane@ge.com
Jaime Peterson	GE	760-685-8573	James.peterson1@ge.com
Robert Polo	GE	905-465-3030 ext 3613	Robert.Polo-Khosrow-Abadi@ge.com
Dorothy Courtney	GE	905-465-3030 ext 3455	Dorothy.Courtney@ge.com

MINUTES

General

The purpose of this meeting was to present and discuss the Preliminary Design Report and GE 60% Engineering Only Submittal. See **Attachment A** for presentation made and handouts provided.

1. GE 60% Engineering Only Submittal

a. GE highlighted the following changes made to P&ID review since 30% submittal:
   - Blowers changed to Positive Displacement (50 HP Aerzen)
   - Cleaning / Drain shown correctly entering/exiting the membrane tank feed sump
   - Chemical systems origins have been highlighted – Either "From Existing PWFP Plant" or "From RFF Facility"

b. GE also reviewed the Membrane Tank GA drawings, electrical SLD, I/O list and control architecture. EMWD will forward the control architecture to Beavens for review and comments to finalize PLC setup.

c. GE highlighted that the final hydraulic grade and piping configuration will be confirmed once the pump TDHs are confirmed, pending on confirmation of layout and membrane tank configuration.
d. GE noted the following minor glitches on the P&IDs:
   - The EQ tank Overflow should be 8" (Not 6").
   - Blower piping should be 8" all the way to the membrane tank header (Line size is inconsistent on P&ID).
   - Need to add actuated valves at each chemical injection point.
e. EMWD confirmed 316 SS will be provided throughout the RRF.
f. EMWD will provide comments on GE 60% Engineering Submittal by COB 7/8/2011. MWH will provide comments on GE 60% Engineering Submittal to EMWD by COB 7/7/2011.
g. EMWD will confirm if stainless steel material schedule should be Sch. 40/20 or Sch. 10.
h. GE will add details on the access platform in the next submittal.
i. Inlet baffles will be included in GE's scope, including design details.
j. GE will add (1) access platform and (2) inlet baffles to the list of cost adjustment items.

2. Riverside WTP Site Visit Follow-up

a. EMWD confirmed that Aerzen positive displacement blowers are acceptable.
b. At EMWD's request, GE will provide reference for ejectors, preferably those that have been in operation for more than five years.
c. Sound attenuation will be provided for the compressors.

3. Preliminary Design Report

a. EMWD confirmed that either ductile iron or C-900 will be acceptable for the new RRF 10 inch feed pipe that runs to both the new RRF equalization tank and the existing Reject Equalization tank.
b. EMWD confirmed that a separate RRF permeate pipe will be provided to send RRF permeate directly to the Raw Water Pump Station, instead of connecting to the off-spec pipe downstream of the valve vault.
c. MWH presented the design criteria of the RRF equalization tank and EMWD concurred. 18,000 gallons of active RRF equalization volume will be provided.
d. EMWD confirmed that canopy will be provided over the membrane tanks too.
e. Among the layout options, EMWD eliminated Options 1 and 4, and preferred Options 2 and 3 with the following exceptions:
   - West sun on the membrane tanks is a concern to Operations.
   - The cassette laydown area should be moved to the west end of the membrane tanks for Option 3.
f. MWH will revise the Option 2 layout as follows:

- Provide a 5-ft walkway separating the hydrochloric facility, BP and CIP tanks from the RRF building and the membrane tanks.
- The layout of the membrane tanks and RRF building will be mirror-imaged such that the membrane tanks will be east of the RRF building.

g. MWH will send EMWD the revised layout of Option 2 for final selection.

~~g.~~h. ~~and~~ Subsequently, EMWD ~~will~~ confirmed selection of the revised Option 2 for final design of the RRF~~layout~~.

4. Action Items

No.	Item	Responsible Party	Due
1.	EMWD will provide comments on GE 60% Engineering Submittal by COB 7/8/2011. MWH will provide comments on GE 60% Engineering Submittal to EMWD by COB 7/7/2011.	EMWD & MWH	
2.	EMWD will forward the control architecture to Beavens for review and comments to finalize PLC setup.		
3.	EMWD will confirm if stainless steel material schedule should be Sch. 40/20 or Sch. 10.	EMWD	
4.	GE will add details on the access platform in the next submittal.	GE	
5.	Inlet baffles will be included in GE's scope, including design details.	GE	
6.	GE will add (1) access platform and (2) inlet baffles to the list of cost adjustment items.	GE	
7.	At EMWD's request, GE will provide reference for ejectors, preferably those that have been in operation for more than five years.	GE	
8.	Sound attenuation will be provided for the compressors.	MWH	
9.	MWH will revise the Option 2 layout	MWH	
10.	MWH will send EMWD the revised layout of Option 2. ~~and EMWD will confirm selection of the layout.~~	EMWD & MWH	
11.	EMWD confirmed on 6/29/11 the selection of revised Option 2.	EMWD	

MEETING MINUTES

Meeting Date: August 4, 2011
Meeting Time: 8:00 am – 9:00 am
Meeting Location: Conference Call
Meeting Topic: RRF Design Coordination

ATTENDEES

Name	With	Phone	Email
Jeff Allred	EMWD	951-928-3777 ext 4296	allredjeff@emwd.org
Greg Kowalski	EMWD	951-928-3777 ext 4466	kowalskig@emwd.org
John Dotinga	EMWD	951-928-3777 ext 7301	dotingaj@emwd.org
Phil Lancaster	EMWD	951-928-3777 ext 7303	lancastp@emwd.org
Mark Wilson	EMWD	???	???
Jim Borchardt	MWH	626-568-6283	James.borchardt@mwhglobal.com
Pei-Chin Low	MWH	626-568-6999	Pei-chin.low@mwhglobal.com

General

The purpose of this call was to confirm the following with EMWD:

1. Controls of the RRF
2. RRF layout and elevation
3. Structural Design Approach
4. Shared CIP/CIP Neutralization Tank, pump, and piping

See **Attachment A** for background information.

1. Controls of the RRF

EMWD confirmed the following:

- A 4' x 6' x 2' lockable panel will be required for the card reader and security cameras. Sufficient space will be provided for the door to swing open. The panel can be located in the RRF building or in the existing control building.
- Multi-mode fiber will be pulled by the General Contractor. Since special training is required for the termination of the fiber, EMWD's on-call contractor will provide termination instead.
- Under normal flow conditions, one train will be in operation and the speed of the RRF filtrate (permeate) pumps will be controlled by the water level in the RRF EQ tank.
- The second train will be brought into service manually by the operator when the duty train has to be taken out of service for maintenance or when the second train is required for additional capacity.
- As with the current membrane system, the CIP for the RRF will be initiated manually by the operators. Once initiated, the CIP will be performed automatically.
- Maintenance cleans will be initiated manually and performed automatically under normal operating conditions.

2. RRF layout

MWH presented the revised layout of the facility (see **Attachment A**) and highlighted the following to EMWD:

- Instead of designing the removable membrane tank covers to support a 5-tonne weight from a sludged cassette, separate cassette "landing" areas will be provided at the membrane tanks. Two cassette landing areas will be provided: one at the top of the membrane tanks and another at grade.
- The roof of the RRF building will be extended to cover the hydrochloric acid facility.
- The tanks will be separate structures from the RRF building (i.e. no common wall), taking advantage of the pre-engineered building.
- A walkway will be provided along the west-side of the membrane tanks for access to the valves located on the filtrate and air lines near the top of the membrane tanks. This will also provide access to the vacuum eductors.
- A common set of stairs will be provided for access to the top of the RRF EQ and membrane tanks.

EMWD agreed with the revised layout and requested a second set of stairs be provided. MWH will provide a second set of stairs, as requested.

There was also a concern with the elevations of the facility. The canopy of the membrane tank is estimated to be 2-3 feet higher than the existing buildings. An elevation view will be provided.

3. Structural Design Approach

EMWD confirmed that the proposed structural design approach (see **Attachment A**) is acceptable.

4. Shared CIP/CIP Neutralization Tank, pump, and piping

GE confirmed that a similar, shared CIP system is provided at both the Riverside WTP and Twin Oaks WTP. Both plants were scrutinized and approved by the CDPH. MWH informally talked by phone with CDPH's membrane engineer (Eugene Leong). Eugene Leong indicated that he does not have concerns with the shared CIP system, as long as the CIP tank is rinsed before its next use. Eugene Leong indicated that he would discuss this topic with the CDPH Water Committee at their next meeting, and inform us if additional issues are identified. EMWD confirmed that the shared CIP system is acceptable and formal written confirmation is not needed.

5. Action Items

No.	Item	Responsible Party	Due
1.	A 4' x 6' x 2' lockable panel will be provided for the card reader and security cameras.	MWH	8/12/2011
2.	Elevation view of RRF, relative to other buildings at PWFP	MWH	8/19/2011
3.	A second set of stairs will be provided for access to RRF EQ and membrane tanks.	MWH	8/12/2011

AGENDA # 2

1. RRF LAYOUT AS OF 8/3/2011

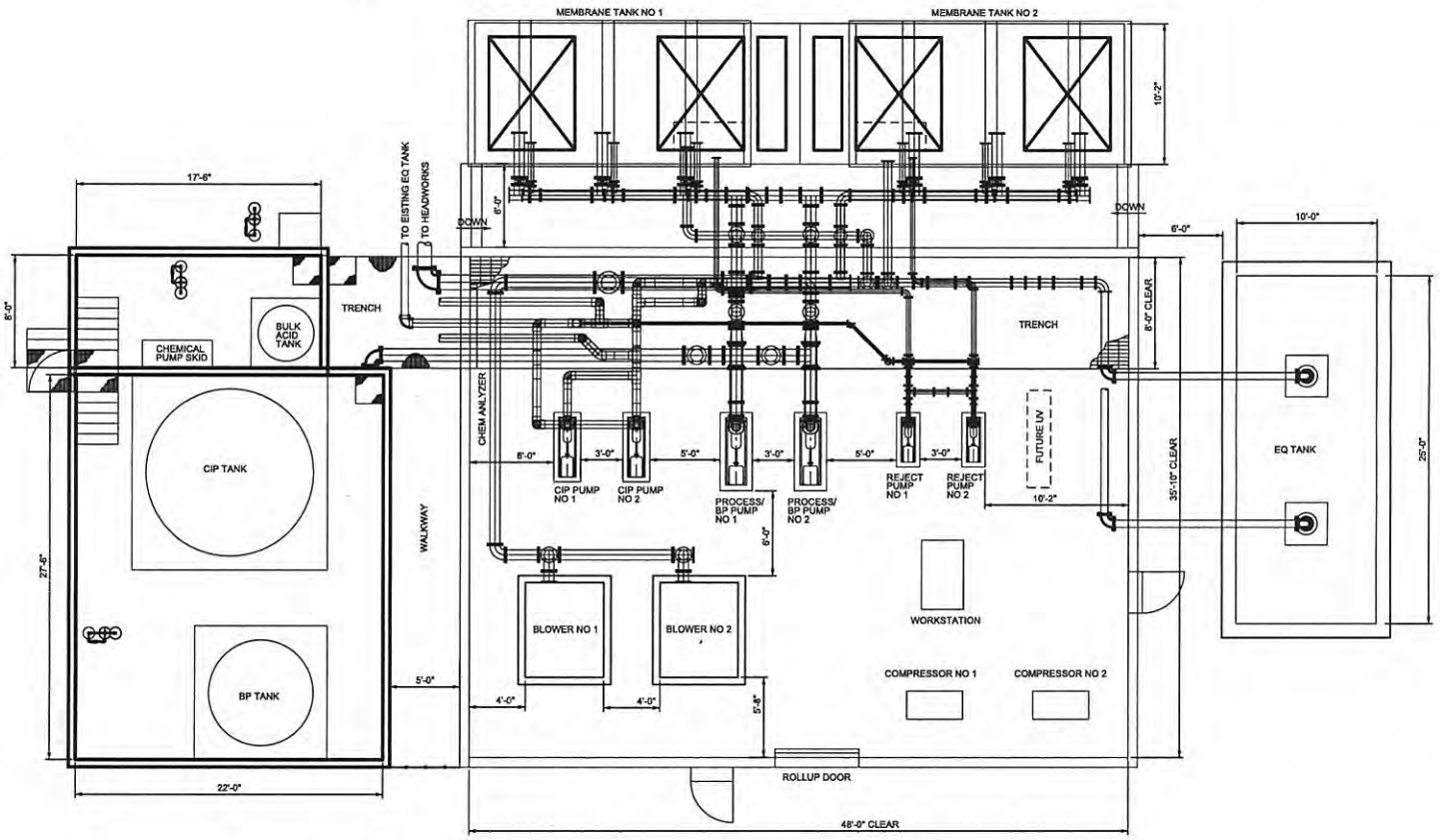

NOT FOR CONSTRUCTION

This document is an interim document and not suitable for construction. As an interim document, it may contain data that is potentially inaccurate or incomplete and is not to be relied upon without the express written consent of the preparer.

WARNING
0 ½ 1
IF THIS BAR DOES NOT MEASURE 1" THEN DRAWING IS NOT TO SCALE

MWH®

REVISIONS					
NO.	DATE	INITIAL	DESCRIPTION	APP'D	DATE

APPROVED BY:

DIRECTOR OF ENGINEERING DATE

REFERENCES

EASTERN MUNICIPAL WATER DISTRICT

PROJECT MANAGER DATE

APPROVALS

	INITIAL	DATE
PROJECT ENG.		
INSPECTION		
FIR. OPERATIONS		

		DATE
DESIGNED	B SHIN	
DRAWN	B SHIN	
CHECKED	N/A	
REVIEWED		
SCALE:	1/4" = 1'-0"	

EASTERN MUNICIPAL WATER DISTRICT

EASTERN MUNICIPAL WATER DISTRICT
RIVERSIDE COUNTY, CALIFORNIA
PERRIS WATER FILTRATION PLANT

BUILDING/AREA
MECHANICAL
RRF PLAN

I.D.	
S.A.	
W.O.	
C.O.	
COORD.	
SHT.	OF XX

M-1

File: EMWD M-1.dgn Model: Layout1 DesignScript: MWH_Metn_Pentable_V89.tbl PlotScale: 0:2 3/16 " / in. User: Brandon J Shin Plot Date: 8/2/2011 11:58:59 AM

AGENDA #2

RRF PRELIMINARY LAYOUT
AS OF 6/27/2011
(FOR REFERENCE)

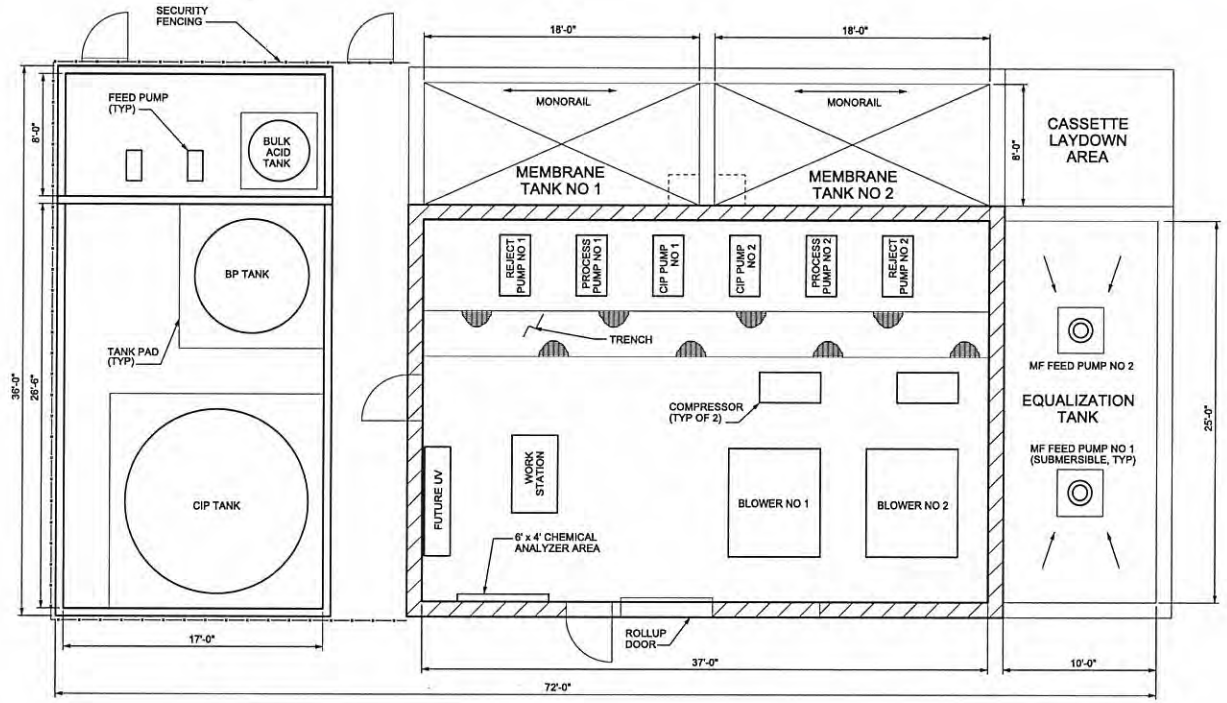

REV	DATE	BY	DESCRIPTION

SCALE: 1/4" = 1'-0"

WARNING: 0 ½ 1 — IF THIS BAR DOES NOT MEASURE 1" THEN DRAWING IS NOT TO SCALE

DESIGNED
DRAWN
CHECKED

NOT FOR CONSTRUCTION
This document is an interim document and not suitable for construction. As an interim document, it may contain data that is potentially inaccurate or incomplete and is not to be relied upon without the express written consent of the preparer.

MWH

EASTERN MUNICIPAL WATER DISTRICT Since 1950

PERRIS WATER FILTRATION PLANT

OPTION 2
RRF LAYOUT

FIGURE 5-3

1008558

File: EMWD_FIG5-3.dgn Model: LAYOUT1 ColorTable: bw.ctb DesignScript: MWH_Iplot_PenTable_V99.pen PlotScale: 0.683333:1 User: brendon | shin Plot Date: 27-JUN-2011 15:38

AGENDA #3 - STRUCTURAL APPROACH

Pei-Chin Low

From: Pei-Chin Low
Sent: Thursday, July 21, 2011 4:57 PM
To: Greg Kowalski (kowalskg@emwd.org); 'Allred, Jeffrey'
Cc: James Borchardt; David Palmer
Subject: PWFP RRF - Structural Approach

Importance: High

Hi, Greg and Jeff,

Our design team is charging full steam ahead and the purpose of this email is to let you know our structural design approach. Please let us know ASAP if you have any concerns with our approach as we want to keep re-work to the absolute minimal.

- The membrane building will be a pre-engineered building, independent of the concrete membrane tanks and equalization tank, and similar to the existing building.
- The pre-engineered building will be a performance spec item and includes the cover for the chemical area (including the hydrochloric acid facility, BP and CIP tanks) and walkway.
- The monorail system and the support frame will be a performance spec item.
- MWH will be performing the detailed design of the following:
    - The chemical area;
    - The foundation of the RRF facility including the membrane building, concrete tanks, and the chemical area. The cassette laydown area will be an extension of the foundation.
    - RRF Equalization Tank which will include concrete cover with aluminum railing, hatches/checkered plate around the submersible feed pumps, and will be sloped at the bottom to prevent accumulation of grit.
    - Membrane tanks which will include a concrete deck where the sludged membrane tank can sit on, concrete overflow channels and aluminum covers similar to what the existing membrane tanks have now (which Operations like). Railings will be provided too.

Please let me know if you have any question or need more information. Thanks.

Regards,
Pei-Chin

AGENDA #4
RRF PAD ELEVATION

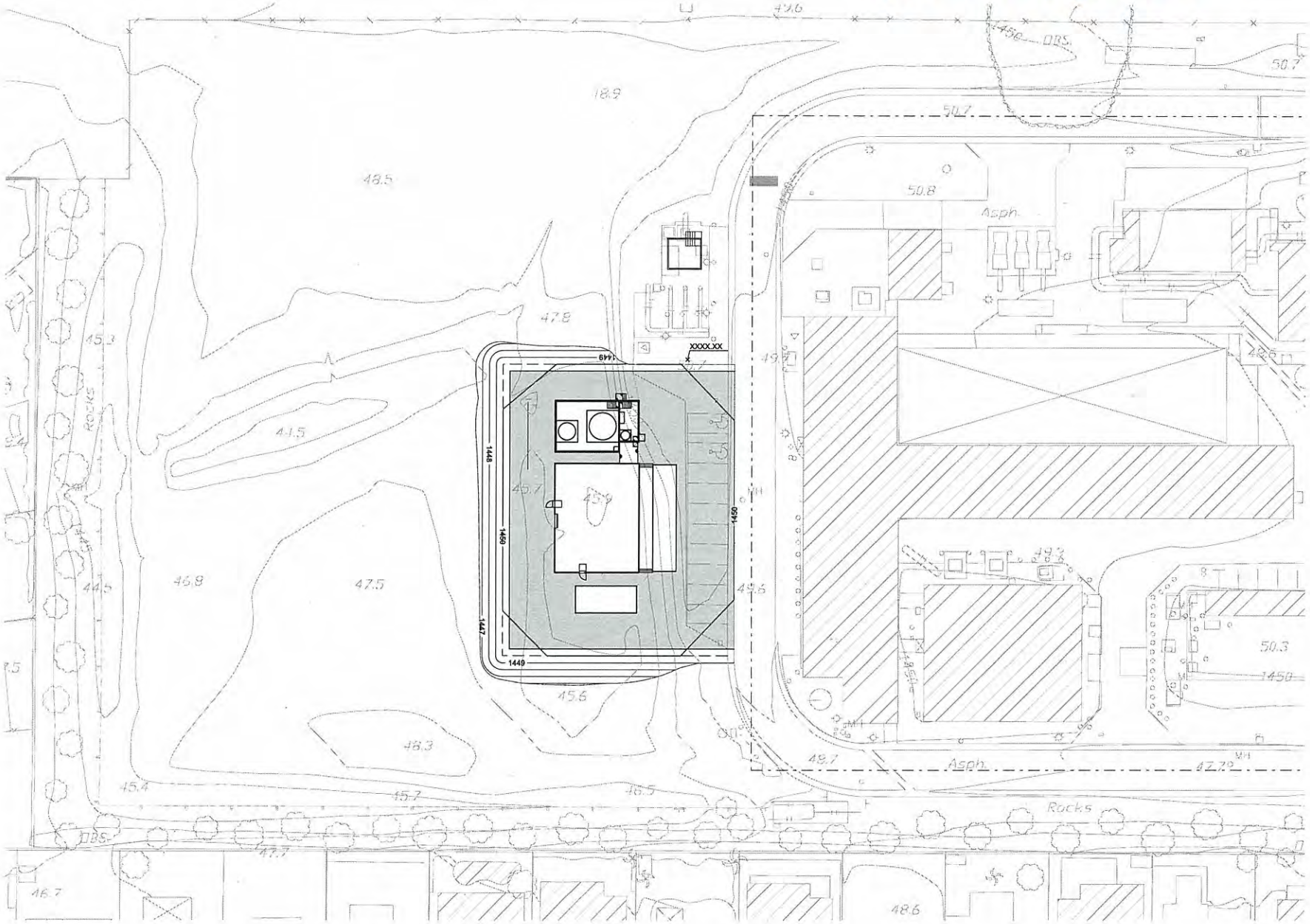

AGENDA #5 – SHARED CIP SYSTEM

Pei-Chin Low

From: Allred, Jeffrey [allredjeff@emwd.org]
Sent: Thursday, July 28, 2011 8:48 AM
To: Pei-Chin Low
Cc: Kowalski, Greg; James Borchardt; 'Fisher-Kane, Timothy (GE Power & Water)'; Peterson, James (GE Power & Water); Polo-Khosrow-Abadi, Robert (GE Power & Water); Dufresne, Kevin (GE Power & Water); Courtney, Dorothy (GE Power & Water); Dotinga, John; Lancaster, Phil
Subject: PWFP RRF - GE Design Submittal #2 Comments

Importance: High

Pei-Chin,

Please discuss the shared CIP/CIP Neutralization Tank, pump, and piping issue with CDPH. They should be informed that the same pump and piping are shared with the feed, and that the goal is to eventually send treated reject directly to the UV system. We need to obtain CDPH approval in writing, as retrofitting after the fact will be expensive.

Thanks,
Jeff

From: Fisher-Kane, Timothy (GE Power & Water) [mailto:Timothy.Kane@ge.com]
Sent: Wednesday, July 27, 2011 10:39 AM
To: Allred, Jeffrey
Cc: Kowalski, Greg; Pei-Chin Low; James.H.Borchardt@us.mwhglobal.com; Peterson, James (GE Power & Water); Polo-Khosrow-Abadi, Robert (GE Power & Water); Dufresne, Kevin (GE Power & Water); Courtney, Dorothy (GE Power & Water)
Subject: RE: PWFP RRF - GE Design Submittal #2 Comments

EMWD Team,
Further to yesterday's discussion, I have confirmed that both the Riverside WTP and the huge Twin Oaks WTP both utilize the common CIP / Neutralization tank set-up proposed for the Perris RRF.

Both systems were scrutinized by the CDPH and approved. I understand their focus was primarily on the double block-and-bleed configurations, and no-one recalls them raising any concerns regarding the use of the one tank for the two services.

So we will keep the design as-is unless advised otherwise by MWH / EMWD.

Thanks

Tim Fisher-Kane
Senior Project Manager
GE Energy

T: (760) 305-0145
C: (619) 933-7934

GE imagination at work

Any non-public information in this e-mail must be kept confidential. This e-mail is not intended to create legal obligations, and should not be understood as a representation, commitment, offer, admission or waiver.

From: Fisher-Kane, Timothy (GE Power & Water)
Sent: Friday, July 22, 2011 1:32 PM
To: 'Allred, Jeffrey'
Cc: Kowalski, Greg; 'Pei-Chin Low'; James.H.Borchardt@us.mwhglobal.com; Peterson, James (GE Power & Water); Polo-Khosrow-Abadi, Robert (GE Power & Water); Dufresne, Kevin (GE Power & Water); Courtney, Dorothy (GE Power & Water)
Subject: RE: PWFP RRF - GE Design Submittal #2 Comments

Jeff and Team,
Attached are our initial responses to your Submittal Comments. I understand from MWH that you wanted to have a call to discuss these issues.
Let me know if you are available Early next week to discuss, and I'll set up a call. (FYI: I'm out Wed afternoon and all day Thursday)

Probably the "hot topics" will be:

- CIP cross connection Questions
- Valve fail positions
- District Approved materials list
- Data sheets / cut sheets expectations

We may also want to discuss the overall layouts and piping configuration.

Thanks

Tim Fisher-Kane
Senior Project Manager
GE Energy

T: (760) 305-0145
C: (619) 933-7934

GE imagination at work

Any non-public information in this e-mail must be kept confidential. This e-mail is not intended to create legal obligations, and should not be understood as a representation, commitment, offer, admission or waiver.

From: Allred, Jeffrey [mailto:allredjeff@emwd.org]
Sent: Tuesday, July 12, 2011 11:53 AM
To: Fisher-Kane, Timothy (GE Power & Water)
Cc: Kowalski, Greg; 'Pei-Chin Low'; James.H.Borchardt@us.mwhglobal.com; Peterson, James (GE Power & Water)
Subject: PWFP RRF - GE Design Submittal #2 Comments

Tim,

Attached are comments for GE Design Submittal #2.

Thanks,

Meeting Date: August 30, 2011
Meeting Time: 1:30 pm – 3:00 pm
Meeting Location: EMWD Conference Room
Meeting Topic: Evaluation of VE Recommendation

ATTENDEES

Name	With	Phone	Email
John Dotinga	EMWD	951-928-3777 ext 7301	dotingaj@emwd.org
Jeff Allred	EMWD	951-928-3777 ext 4296	allredjeff@emwd.org
Greg Kowalski	EMWD	951-928-3777 ext 4466	kowalskig@emwd.org
Joe Mouawad	EMWD	951-928-3777 ext 4463	mouawadj@emwd.org
Khos Ghaderi	EMWD	951-928-3777 ext 6240	ghaderik@emwd.org
Jim Borchardt	MWH	626-568-6283	James.Borchardt@mwhglobal.com
Pei-Chin Low	MWH	626-568-6999	Pei-Chin.Low@mwhglobal.com
Tim Fisher-Kane	GE	760-305-0145	Timothy.Kane@ge.com
Kevin Dufresne	GE	905-465-3030 ext 3093	Kevin.Dufresne@ge.com
Robert Polo	GE	905-465-3030 ext 3613	Robert.Polo-Khosrow-Abadi@ge.com
Dorothy Courtney	GE	905-465-3030 ext 3455	Dorothy.Courtney@ge.com

MINUTES

- The purpose of this meeting was to present the evaluation of VE recommendations for selection and implementation.
- See **Attachment A** for the MWH's evaluation of the VE recommendations, including Engineer's (MWH's) remarks/response and, impacts on design cost and schedule.
- EMWD agreed with MWH's remarks/response with the exception of the following proposals, where further investigations are warranted:
    - Proposal No. 5 - Use rotary lobe pumps (Vogelsang) for permeate/backpulse
        - GE will investigate if vibration is a concern with other rotary lobe pump installations.
        - GE will confirm the availability of NSP 61 certified rotary lobe pumps (Boerger and Vogelsang) and the cost, if available.
        - GE will confirm if CIP waste pumps should be rotary lobe pumps too.
        - EMWD will confirm with Maintenance Department if rotary lobe pumps are acceptable.
    - Proposal No. 7 - Eliminate the hydrochloric acid and use citric acid
        - GE would like to depress pH to 2.1 – 2.3 using hydrochloric acid.

        - EMWD believes that they could depress pH to 2.1 – 2.3 using citric acid instead. Currently, EMWD uses 220 gallons of citric acid per train (~22,000 gallons per train) to get to pH 2.5 or below. Chemical costs would be higher using citric acid.
        - EMWD will check with the Safety Department for safety concerns using hydrochloric acid.
    - Proposal No. 11 - Use more standard kilo-amperes interrupting capacity (kAIC)-rated motor control center (MCC) if supported by documentation
        - EMWD will confirm if 65 KAIC MCC is acceptable.
    - Proposal No. 12 - Use common feed fuse disconnect for valves
        - EMWD will confirm the number of valves that can be powered from one breaker.
- EMWD confirmed that the attached modified design of the RRF is acceptable, with a combined overflow and CIP neutralization tank between membrane tanks between membrane tanks.
- EMWD confirmed that one duty and one standby configuration will be provided for the blowers and compressors.
- EMWD confirmed that a catwalk will be provided at the top of the membrane tanks to provide Operator access to permeate and air valves, as well as room to stand when removing cassettes from the membrane tanks.

Proposal No.	Description	VE Potential Life-cycle Cost Savings	MWH Estimated Life-cycle Cost Savings	MWH Remarks/Response	Design Impact	Design Schedule Impact	Owner's Response to VE Proposals
1	Use the existing clean-in-place neutralization tank instead of adding a new one at the Reject Recovery Facility (RRF)	$108,000	~$ 0 (see attached modified design)	• **Not recommended** • Volume and water quality will vary between 1st and RRF (2nd) CIP neutralization waste, and control systems modifications will be necessary. • MWH modified design would have the overflow tank enlarged. So, cost of either approach is similar (± $30, 000) • MWH modified design will minimize disruption to the existing operations. • 2nd stage Neutralization requirements: o Twice daily the 2nd stage needs the neutralization tank o For each event the minimum volume to be neutralized will be ~7000 gal o Each event could either be from a maintenance clean or a recovery clean o Neutralization system must be able to reliably neutralize waste solutions (50mg/L-1000mg/L of hypochlorite and pH from 2 – 5 for acid cleans)	Yes	Yes	
2	Use a plastic tank for the equalization with end suction centrifugal fee pumps rather than concrete and submersibles	$10,750	$10,000	• **Not recommended** • Savings are from future energy costs. Capital cost is higher for plastic tank. • The RRF EQ tank is the most southern structure, closest to neighbors. • A concrete tank is more aesthetically pleasing to the neighbors than the plastic tank. • Noise could be an issue if end suction centrifugal pumps are used.	Yes	Yes	

Proposal No.	Description	VE Potential Life-cycle Cost Savings	MWH Estimated Life-cycle Cost Savings	MWH Remarks/Response	Design Impact	Design Schedule Impact	Owner's Response to VE Proposals
3	Use shelf spares for the blowers and compressors and clean-in-place (CIP) pump and not be redundant	$120,000	$10,000	• **Not recommended for blowers. Shelf spare for compressor could be considered (w/o receiver).** • Proposal's intention was to avoid building expansion to accommodate the panels. Existing layout includes space for panels and the building does not require expansion. • Concern is that RRF may be out of service for more than one week. • Bearings tend not to last when stored.	No	No	
4	Eliminate the overflow structure on the membrane tanks and replace with pipe	$10,000	($20,000)	• **Not recommended** • Eliminates tank top landing area for cassette. • No containment of overflow volume will be available if not provided. • If the overflow weir is replaced with pipe, the depth of the membrane tank will be increased by 1-2 feet, aggravating the issue with the membrane tanks and canopy being the tallest structure in the facility.	Yes	Yes	
5	Use rotary lobe pumps (Vogelsang) for permeate/backpulse	($25,000)		• **Requires District's input** • Neither rotary lobe nor centrifugal pump will work with a membrane tank buried 6 ft below grade and the pumps are left at grade. • If centrifugal pumps are used, the permeate pump must be at the same elevation with the bottom of the membrane tank (i.e. the shallow end). Pumps will have to be lowered if membrane tanks are buried. • If rotary lobe (PD) pumps are used, the membrane tanks can be buried up to 3-4 feet deeper than the current design. If the membrane tanks are buried more, the pumps will have to be lowered too. • Rotary lobe pumps have higher horsepower, higher cost and greater vibration than centrifugal pumps. • Rotary lobe pumps may not have NSF 61 certification.	Yes	Yes	

Proposal No.	Description	VE Potential Life-cycle Cost Savings	MWH Estimated Life-cycle Cost Savings	MWH Remarks/Response	Design Impact	Design Schedule Impact	Owner's Response to VE Proposals
6	Use the existing back pulse tank to back pulse the membranes	$63,000	($5,000)	• **Not recommended.** • Suction conditions will not work for the proposed pumps. • Existing pumps are too large, and would require modifications and could cause disruption to existing operations. • Proposal's intention was to reduce building size. Canopy size is controlled by the size of the CIP tank. This proposal will not reduce building size.	Yes	Yes	
7	Eliminate the hydrochloric acid and use citric acid	$67,000	$5,000	• **Not recommended** • Strong mineral acid is required to reduce pH to less than 3. • Citric acid will not be able to lower pH sufficiently. • Concern for $CaSO_4$ fouling. Sulfuric acid should not be used. • Actual usage only 6 tons per year.	No	Yes	
8	Reduce conservatism in membrane design; eliminate third cassette/reduce tank size (existing final subgroup operating at 12 gallons per square foot per day)	$13,000	$20,000	• **Not recommended** • Based on past discussion with GE, GE will only guarantee 0.9 mgd if two cassettes are provided instead of three. The 3rd cassette is to provide redundancy as well as for future expansion. • GE confirmed that there is no available pre-engineered design of the dummy cassette for the 500d cassettes.	Yes	Yes	
9	Why is GE not proposing the low energy aeration process?	$180,000	N/A	• **Not available** • LEAP aeration technology is currently available for MBRs only. • Currently it is not available for drinking water applications (certification and reliability testing have not been completed).	N/A	N/A	
10	Eliminate the redundant programmable logic controller (PLC)	$34,000	$34,000	• **Recommended** • Agree with VE's recommendation since the RRF will not be a critical facility.	No	No	

Proposal No.	Description	VE Potential Life-cycle Cost Savings	MWH Estimated Life-cycle Cost Savings	MWH Remarks/Response	Design Impact	Design Schedule Impact	Owner's Response to VE Proposals
11	Use more standard kilo-amperes interrupting capacity (kAIC)-rated motor control center (MCC) if supported by documentation	$36,000	$36,000	• **Not recommended** • The existing electrical equipment at the site is rated 100KAIC, assumed to be based on short circuit studies conducted previously. • Electrical equipment for the RRF should have the same rating. Else, in the event when a greater than 65 KAIC short circuit happens, the bracing of the equipment could be damaged and could pose a safety hazard if someone were in its proximity. • Typically specify that the Contractor to include a Power Systems Analysis.	Yes	Yes	
12	Use common feed fuse disconnect for valves	$32,000	$32,000	• **Recommended** • EMWD's input needed - to determine how many valves can be powered from one breaker (7-9 per breaker?)	Yes	No	
13	Remove the cover superstructure and only extend the cover over the valves between the buildings	$29,000	$29,000	• **Not recommended** • Operations needs shade while working on the cassettes. • Covers may become too hot to stand on without shade.	No	No	
14	Put the valves and pipe above grade for easy access and eliminate the pipe trench in the building	$20,000	~$0	• **Not recommended** • Trench is for piping only. • Valves are already above trench for easy access. • Trench allows much better access for operations and maintenance. • Trench drainage sump is provided in design. • Additional costs (and space) for pipe supports.	Yes	Yes	
15	Move the RRF north about 100 feet	($89,000)	($89,000)	• **Not recommended** • The current layout does not interfere with the future expansion. • Piping becomes longer with more headlosses, without encroaching into MWD easement.	Yes	Yes	
16	Eliminate the monorail and use a portable crane to remove the membranes (make covers out of fiberglass)	$0	$0	• **Not recommended** • The sludged weight of one 500d cassette is 5 tons. • Operators with special certification are required to operate the portable crane.	No	No	

8/29/2011

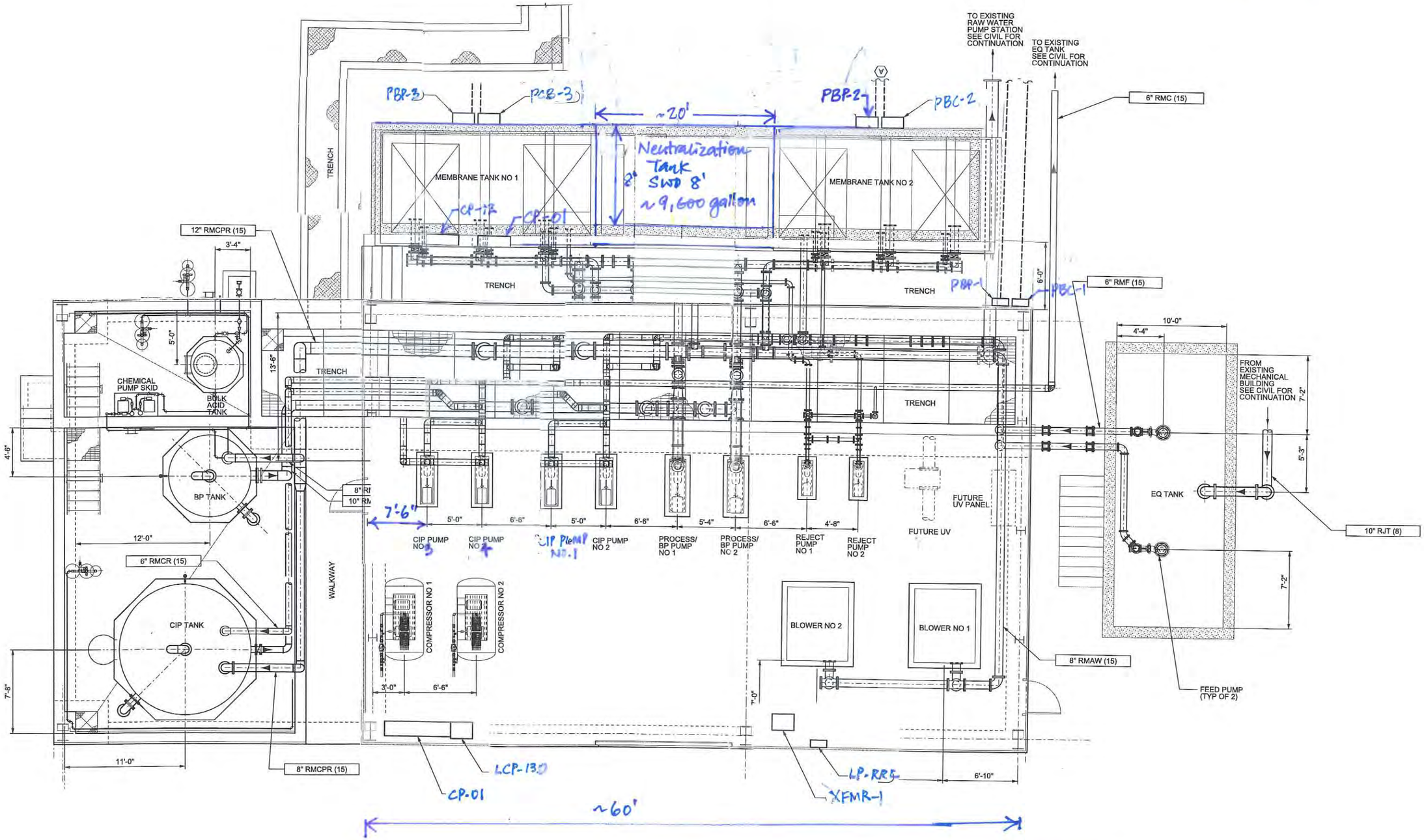

PROPOSED MODIFICATIONS TO RRF MECHANICAL PLAN

Meeting Date: September 26, 2011
Meeting Time: 3:00 pm – 4:00 pm
Meeting Location: EMWD Conference Room 218
Meeting Topic: Safety Pre-Use Analysis Workshop

ATTENDEES

Name	With	Phone	Email
Jeff Allred	EMWD	951-928-3777 ext 4296	allredjeff@emwd.org
Greg Kowalski	EMWD	951-928-3777 ext 4466	kowalskig@emwd.org
Dave Brown	EMWD	951-928-3777 ext 6269	browne@emwd.org
Chris Pendergrass	EMWD	951-928-3777 ext 4304	Pendergc.@emwd.org
Jim Borchardt	MWH	626-568-6283	James.Borchardt@mwhglobal.com
Pei-Chin Low	MWH	626-568-6999	Pei-Chin.Low@mwhglobal.com

MINUTES

1. Project Background
    a) Perris WFP Reject Recovery Facility
        - Purpose: To treat the reject flow from the existing PWFP membrane system and return the treated water to the head of the plant for reuse as potable water source. This reuse of the reject flows will minimize the amount of waste sent to the sewer on a daily basis, which has to be further treated prior to disposal (i.e. additional wastewater operating costs).
2. Pre-Use Analysis Form – See Attached (Revised) Form
3. Design Safety Checklist – See Attached Checklist
4. Action Items
    a) MWH – Revise the Pre-Use Analysis Form as follows:
        - Hydrochloric acid facility will be provided. Hydrochloric acid will be used as backup to critic acid for membrane acid cleans.
        - Removable handrails will be provided around the hatches at the RRF EQ tank, including self closing gate.
        - No permanent ladder will be provided for the RRF EQ tank. .
        - EMWD does not have any standard leak detection system, though monitoring system is preferred.
        - Flow switch to detect activation will be provided for both eyewash and shower.
        - One eyewash/safety shower will be provided in the RRF facility, close to chemical dosing points.

- All switches, valves and controls will be located for easy accessibility by Plant Operators and maintenance personnel, preferably at waist and chest height, taking ergonomics into consideration.
- Contractor will provide signage for confined space. EMWD will forward specification to MWH.
- Interlocks will be provided such that sodium hypochlorite and acid cleaning waste will not be in the overflow/CIP neutralization tank at the same time.
- Vents will be provided at the overflow/CIP neutralization tank.

b) Pre-Use Analysis form will be revised based on above comments and re-distributed to Operations for review.

Meeting Date: October 11, 2011
Meeting Time: 1:00 pm – 2:00 pm
Meeting Location: EMWD Conference Room
Meeting Topic: Rotary Lobe Pumps and Layout Options

ATTENDEES

Name	With	Phone	Email
John Dotinga	EMWD	951-928-3777 ext 7301	dotingaj@emwd.org
Jeff Allred	EMWD	951-928-3777 ext 4296	allredjeff@emwd.org
Greg Kowalski	EMWD	951-928-3777 ext 4466	kowalskig@emwd.org
Joe Mouawad	EMWD	951-928-3777 ext 4463	mouawadj@emwd.org
Jim Borchardt	MWH	626-568-6283	James.Borchardt@mwhglobal.com
Pei-Chin Low	MWH	626-568-6999	Pei-Chin.Low@mwhglobal.com

MINUTES

- The purpose of this meeting was to confirm the application of rotary lobe pumps for process pumps and the RRF layout. See **Attachment A** for the presentation made during the meeting.
- Rotary Lobe Pumps
  - ANSI/NSF laboratory indicated that the Vogelsang rotary lobe pumps are in compliance with ANSI/NSF 61 standards.
  - Vogelsang indicated that they hope to have the rotary lobe pumps certified by the end of the year.
  - EMWD preferred horizontal end suction centrifugal pumps to rotary lobe pumps for the following reasons:
    - Familiarity with horizontal end suction centrifugal pumps
    - Rotary lobe pumps are more commonly used for wastewater solids handling application, and are new to EMWD for water application.
  - EMWD confirmed that horizontal end suction centrifugal pumps will be used for process pumps.
- MWH presented two layout options as in **Attachment A**, including the advantages and disadvantages.
  - Option 2 was selected as the preferred layout.
  - MWH will investigate the use of monorail for removal of the submersible waste CIP pumps.

Action Items:

- MWH will investigate the use of monorail for removal of the submersible waste CIP pumps.

MEETING MATERIAL FOR 10/1/2011 CONFERENCE CALL

MWH

Attachment A

By PCL Date 9/30/2011 Client EMWD-RRF Sheet 1 of 8

Chkd. By J. Borchardt Description OPTION 1 - LOWER PLAN BURIED CIP NEUTRALIZATION WASTE TANK + OVERFLOW TANK Job No. 1008058

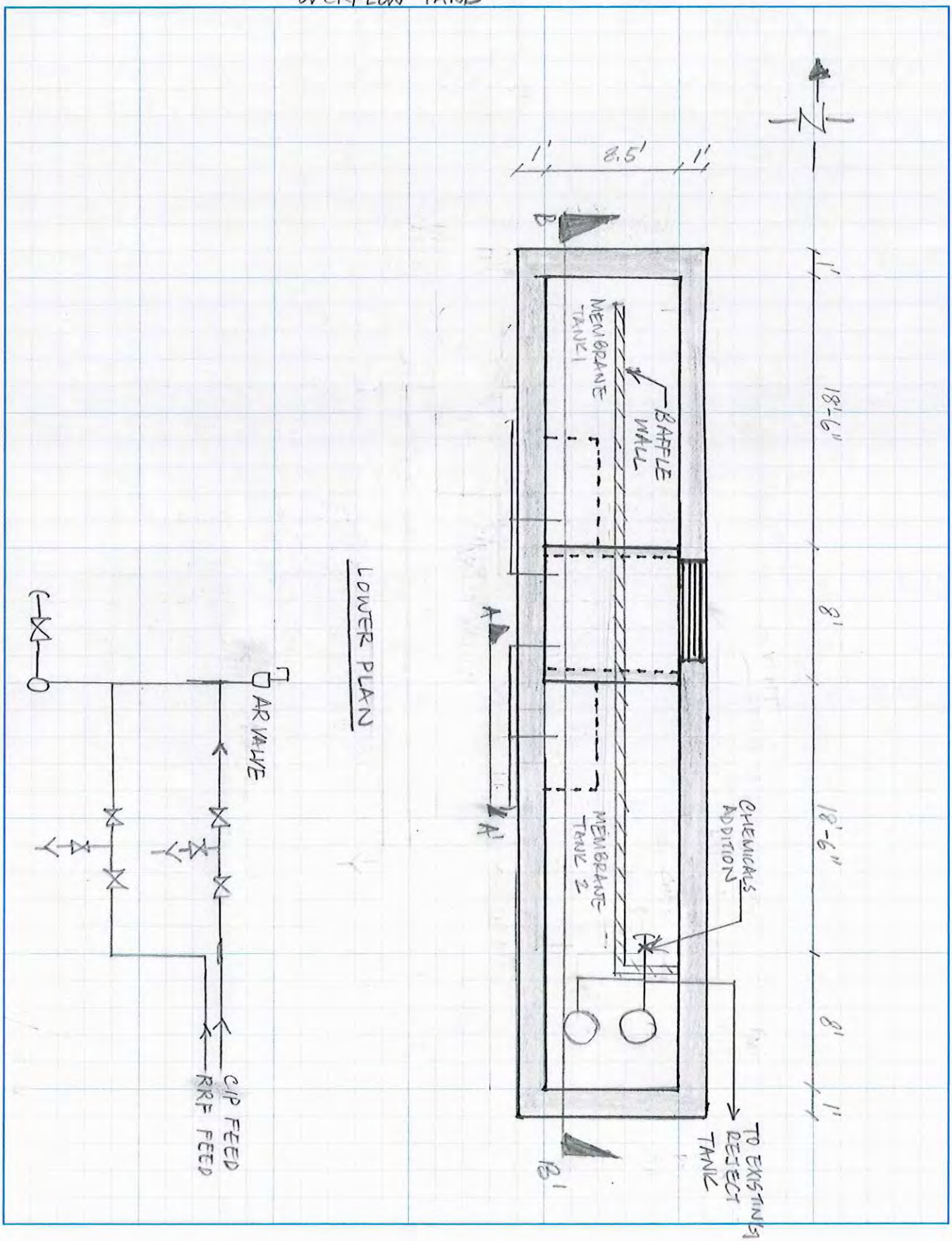

MWH®

By PCL Date 9/30/2011 Client EMWD - RRF Sheet 2 of 6

Chkd. By J. Borchaat Description OPTION 1 - SECTION B-B' Job No. 1008058

- BURIED CIP NEUTRALIZATION / WASTE TANK + OVERFLOW TANK

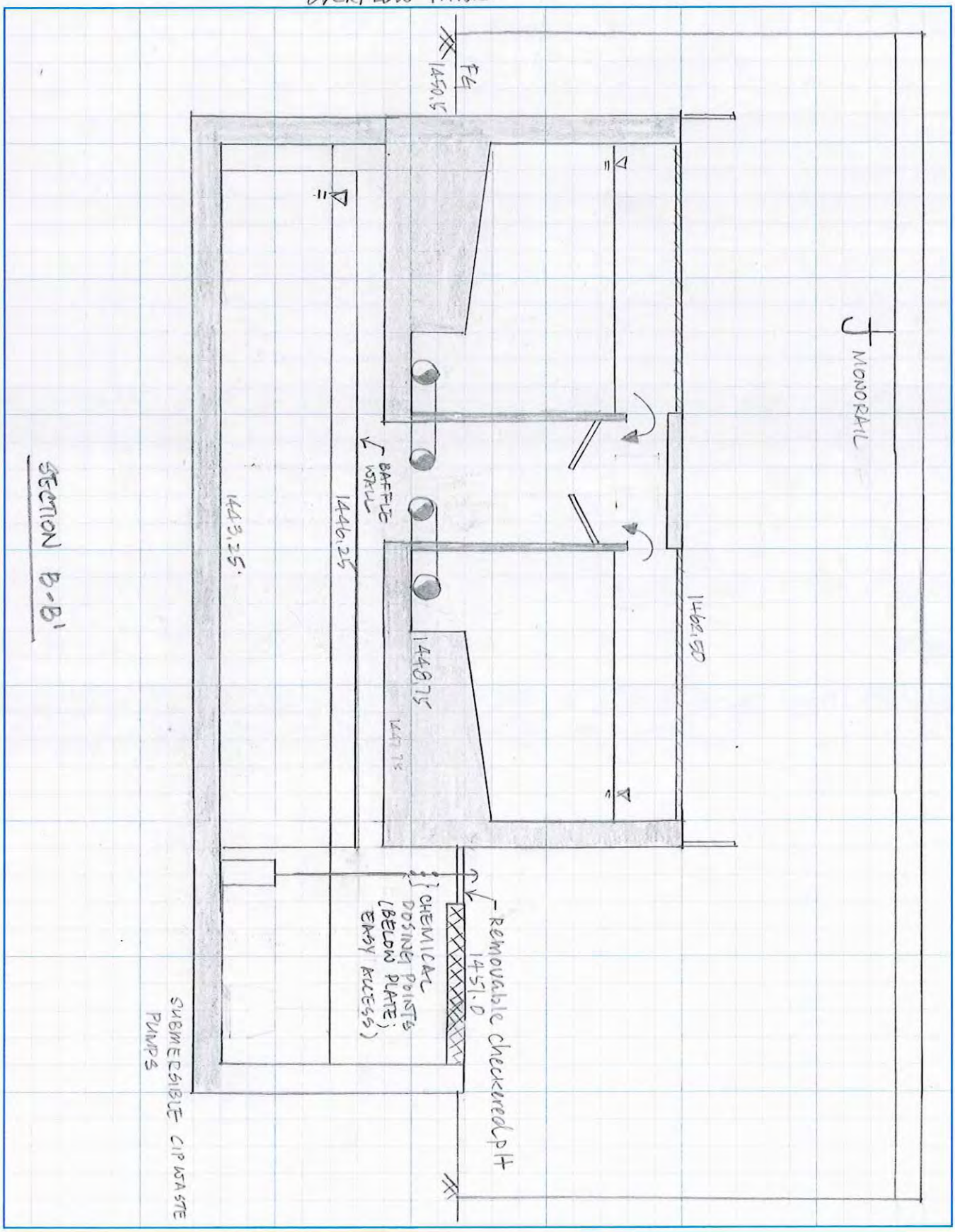

MWH

By PCL Date 9/30/2011 Client EMWD Sheet 3 of 6

Chkd. By J. BORCHARDT Description OPTION 1 SECTION Job No. 1008058

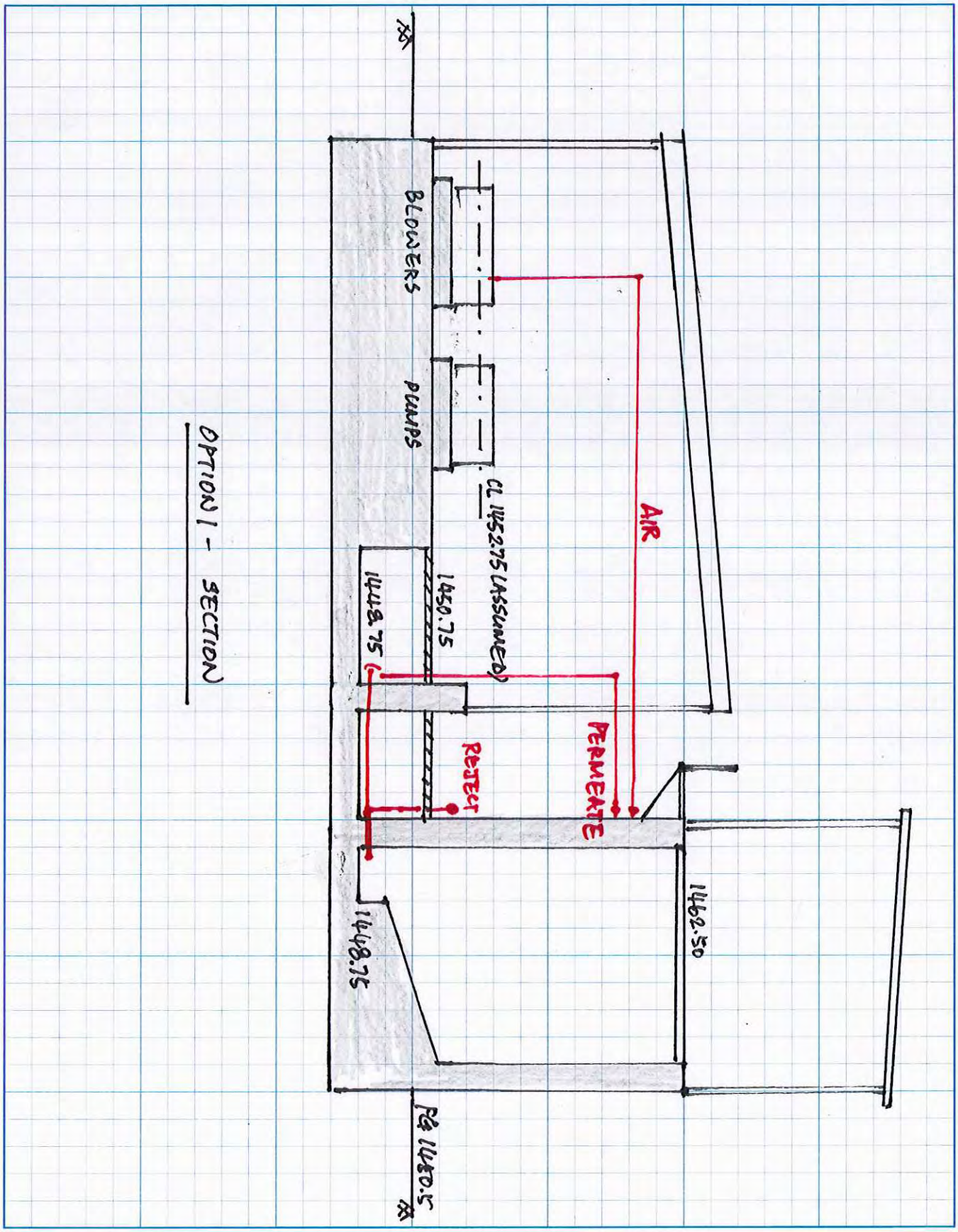

OPTION 1 - SECTION

MWH®

By PCL Date 9/30/2011 Client EMWD. Sheet 4 of 6

Chkd. By J. BORCHARDT Description OPTION 2 - LOWER PLAN Job No. 100S058

- ENLARGENED OVERFLOW STRUCTURE TANKS BET. MEMBRANE TANKS
- SERVES AS CIP NEUTRALIZATION/WASTE TANK.

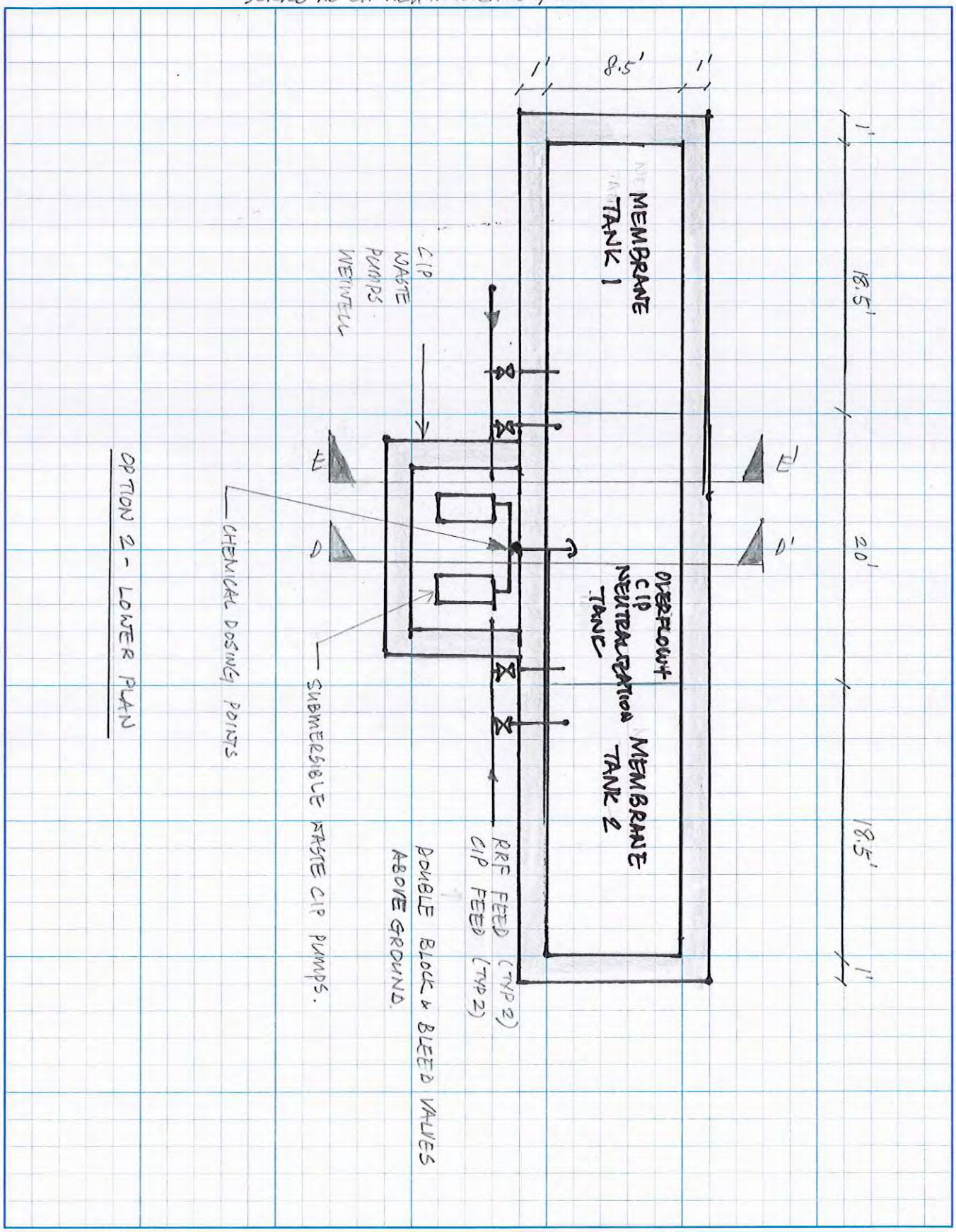

OPTION 2 - LOWER PLAN

MWH

By PCL Date 9/30/2011 Client EMWD Sheet 5 of 6

Chkd. By J.B. Description OPTION 2 - SECTION Job No. 1008058

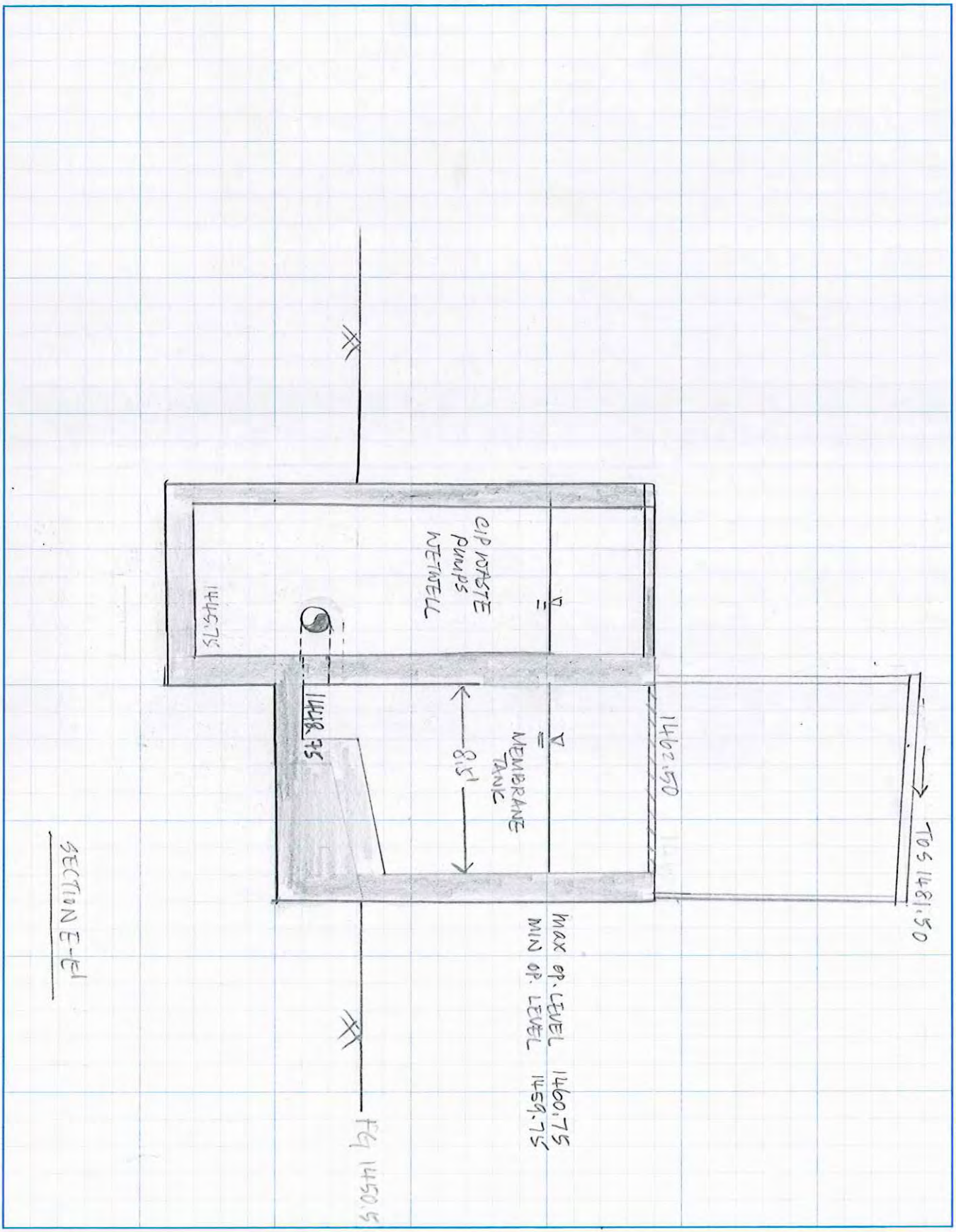

NOT TO SCALE

MWH®

By PCL Date 9/30/2011 Client EMWD (RRF) Sheet 6 of 6

Chkd. By J.B. Description OPTION 2 - SECTION D-D' Job No. 1008058

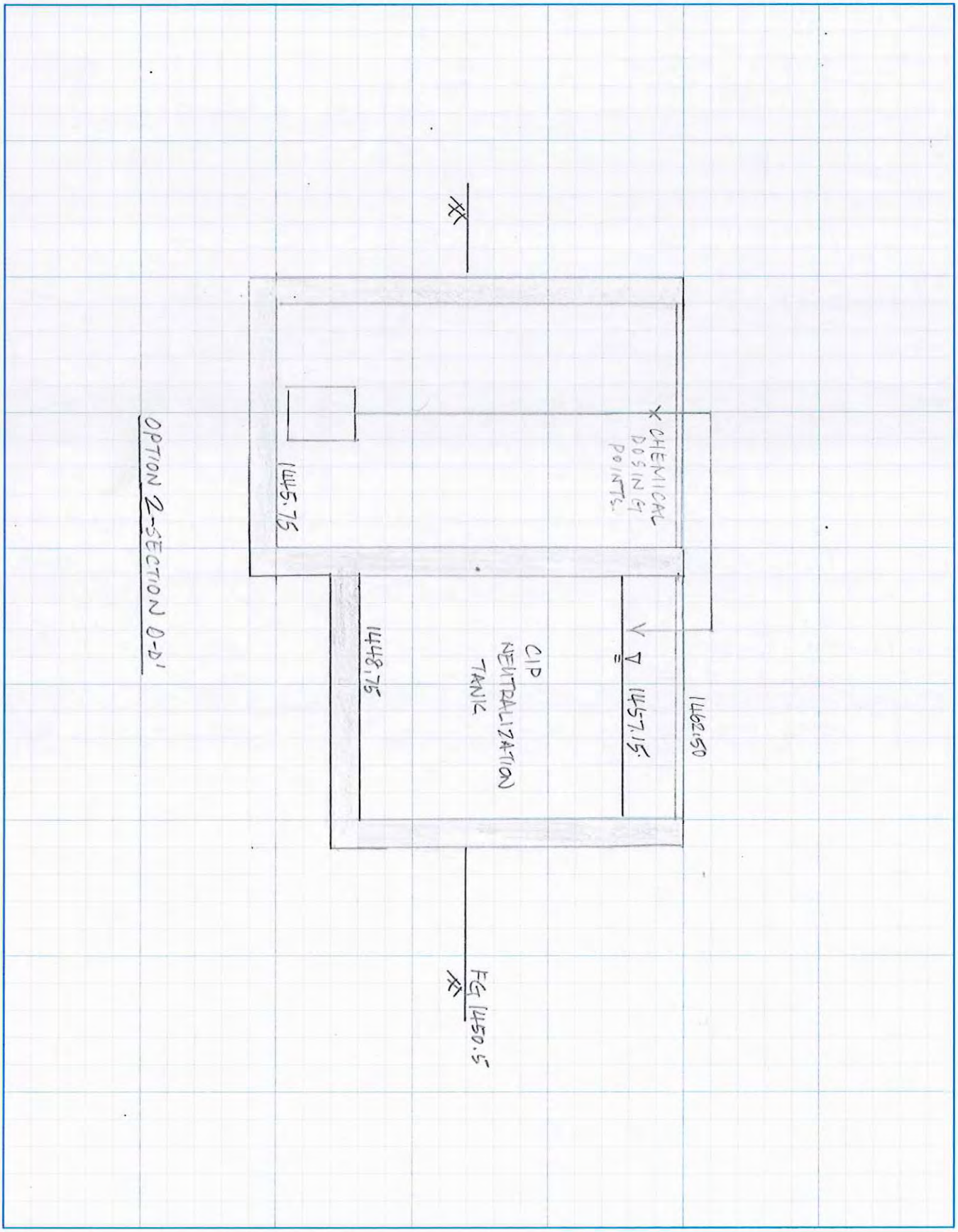

Appendix ES-B

Value Engineering Report dated November 2011

DRAFT *Final Report*

Perris Water Filtration Plant Reject Recovery Project Value Engineering Study

Prepared for

EASTERN MUNICIPAL WATER DISTRICT
SINCE 1950

November 2011

Prepared by

CH2MHILL

CH2M HILL
1100 112th Avenue NE
Suite 400
Bellevue, WA 98004
Tel 425.453.5000
Fax 425.462.5957

November 18, 2011

Jeff Allred, Project Engineer
Eastern Municipal Water District
2270 Trumble Road
Perris, CA 92570

Subject: Perris Water Filtration Plant Reject Recovery Project Value Engineering Study

Dear Jeff:

We are pleased to submit this Final Report of the findings of the Value Engineering (VE) Study that took place August 23-25, 2011, for the Eastern Municipal Water District's plans for reject recovery at the Perris Water Filtration Plant. I want to express my appreciation to you, the EMWD staff, and the MWH Design Team for the support and cooperation throughout the study.

The VE Team reviewed the project at about the 50 percent design completion stage. The background materials available to the VE Team during the study are listed in Appendix A.

The VE proposals presented herein are a combination of cost-saving alternatives and project enhancements. Table 1-1 lists a summary of the VE proposals developed during the workshop, the associated savings or costs the VE team estimated, and EMWD's response to each proposal. The Design Team's analysis of the VE proposals is presented in Appendix B. EMWD chose to accept VE proposals totaling approximately $102,000 in potential life-cycle cost savings. Further observations made by the VE Team during the study but not developed into proposals are attached in Section 4 as Notes to the Designer.

We appreciated the opportunity to provide these engineering services for your project and we hope that our proposals are a benefit to you and EMWD.

Sincerely,

CH2M HILL

Michael L. Doleac, P.E., C.V.S.

Contents

Section **Page**

1 Executive Summary 1-1
1.1 Project Background 1-1
1.2 Project Scope 1-2
1.3 Summary of VE Proposals 1-3

2 Methodology 2-1
2.1 VE Study Format 2-1
2.2 VE Workshop Participants 2-2
2.3 VE Workshop Agenda 2-3
2.4 Brainstormed Ideas 2-4

3 VE Proposals 3-1

4 Notes to Designer 4-1
4.1 Notes to Designer 4-1

Appendices

A List of Background Materials Available to the VE Team **A-1**
B Owner's Response to VE Proposals **B-1**

Tables

1-1 Summary of VE Proposals 1-4
2-1 VE Team 2-2
2-2 Orientation and Presentation Meeting Attendees 2-3
2-3 VE Workshop Agenda 2-3
2-4 Brainstormed Ideas List 2-4

Exhibits

1-1 Aerial Site Map of the Perris Water Filtration Plant Reject Recovery Project 1-1
2-1 VE Process Diagram 2-1

SECTION 1

Executive Summary

This section summarizes the findings of the value engineering (VE) study conducted August 23-25, 2011, on Eastern Municipal Water District's (EMWD) plans for the Perris Water Filtration Plant (PWFP) Reject Recovery Project.

1.1 Project Background

PWFP is a membrane filtration plant that can treat Colorado River Water or State Project Water, or a blend of the two supplies. The plant currently has a rated capacity of 20 million gallons per day (mgd) and is undergoing a plant expansion to 24 mgd. PWFP is equipped with a GE-Zenon Water and Process Technologies (GE) ZeeWeed® 500c ultrafiltration (UF) system and typically treats 5 to 6 mgd during the months of November through March and about 14 mgd during the remainder of the year, with an overall annual average production of just more than 10 mgd.

PWFP normally operates at 98 percent recovery, but may drop to 96 percent recovery when feeding coagulant or at peak flow rates. The product water from the 500c UF system is disinfected by ultraviolet (UV) light prior to being distributed to EMWD's customers. Currently, the reject water from the 500c UF system is discharged to sewer and conveyed to the Perris Valley Regional Water Reclamation Facilities for treatment prior to disposal.

1.2 Project Scope

The proposed Reject Recovery Facility (RRF) is designed to intercept the reject water, treat it onsite, and return it to the head of the PWFP. As part of the membrane system procurement process, EMWD prequalified five membrane manufacturers/suppliers and issued a Request for Proposal. The GE ZeeWeed 500d membrane system was selected for the RRF.

Under the proposed RRF design, reject from the first stage (the existing UF system) is equalized prior to being fed to the second stage (RRF) membrane system. The second stage reject is sent to the sewer via the existing reject equalization tank. Treated water (permeate) from the RRF is sent to the existing raw water pump station. New chemical pumps, except for hydrochloric acid, will be added at the existing chemical facilities to deliver chemicals to the RRF. A new hydrochloric acid facility, including a bulk storage tank and two feed pumps, will be provided at the RRF. A blower system with two positive displacement blowers will provide air scour of the RRF membranes. An air compressor system with two compressors and receivers will be provided for the membrane integrity system. A clean-in-place (CIP) system was included to keep the membranes clean and to maintain membrane system performance.

Exhibit 1-1 is an aerial map of the existing PWFP. The arrow indicates the proposed location for a Reject Recovery Facility.

EXHIBIT 1-1
Aerial map of Eastern Municipal Water District's Perris Water Filtration Plant and the proposed location of the Reject Recovery Facility.

1.3 Summary of VE Proposals

The VE Team studied the RRF project at the approximately 50 percent design completion stage. Table 1-1 summarizes the recommendations, or proposals, made by the VE Team during the workshop. Costs in parentheses are added costs that result from suggested functional improvements. The VE Team utilized the quantities, unit costs, and other data included in the Design Team's construction cost estimate wherever possible. The VE cost information is based on construction costs estimates without markups for engineering, administration, inspections, sales tax, or other contingencies.

Following the conclusion of the VE study, EMWD and the MWH Design Team reviewed each of the VE Team's proposals and determined responses to each. EMWD's decision on each proposal is included in Table 1-1. Appendix B includes a spreadsheet from the Design Team detailing their analysis of each proposal and recommendations for accepting or rejecting each proposal.

TABLE 1-1
Summary of VE Proposals

Proposal No.	Description	Potential Life-cycle Cost Savings	Owner's Response to VE Proposals
1	Use the existing clean-in-place neutralization tank instead of adding a new one at the Reject Recovery Facility (RRF)	$108,000	Rejected
2	Use a plastic tank for the equalization with end suction centrifugal feed pumps rather than concrete and submersibles	$11,000	Rejected
3	Use shelf spares for the blowers and compressors instead of installed redundant units	$120,000	Rejected
4	Eliminate the overflow structure on the membrane tanks and replace with pipe	$10,000	Rejected
5	Bury a portion of the membrane tanks and use rotary lobe pumps for the permeate pumps	($25,000)	Rejected
6	Use the existing back pulse tank to back pulse the membranes	$65,000	Rejected
7	Eliminate the hydrochloric acid and use citric acid	$67,000	Rejected
8	Reduce conservatism in membrane design; eliminate third cassette/reduce tank size (existing final subgroup operating at 12 gallons per square foot per day)	$13,000	Rejected
9	Incorporate GE's Low Energy Aeration Process (LEAP™) into the membrane system aeration design	$180,000	Rejected
10	Eliminate the redundant programmable logic controller	$34,000	Accepted
11	Use more standard kilo-amperes interrupting capacity-rated motor control center if supported by documentation	$36,000	Accepted
12	Use common feed fuse disconnect for valves	$32,000	Accepted
13	Remove the cover superstructure and only extend the cover over the valves between the buildings	$29,000	Rejected
14	Put the valves and pipe above grade for easy access and eliminate the pipe trench in the building	$25,000	Rejected
15	Move the RRF north about 100 feet	($87,000)	Rejected
16	Eliminate the monorail and use a portable crane to remove the membranes (make covers out of fiberglass)	$0	Rejected
	APPROXIMATE TOTAL ACCEPTED SAVINGS		**$102,000**

SECTION 2

Methodology

2.1 VE Study Format

Value engineering is a systematic problem-solving technique involving a select team of people knowledgeable in key aspects of a project and who can take a fully objective view of the project because they have not been involved in the design to date. The VE Team members for the PWFP RRF VE study were chosen because of their experience and expertise in water filtration and membrane processes and in cost estimating. The overall VE process is outlined in the Exhibit 2-1 diagram below.

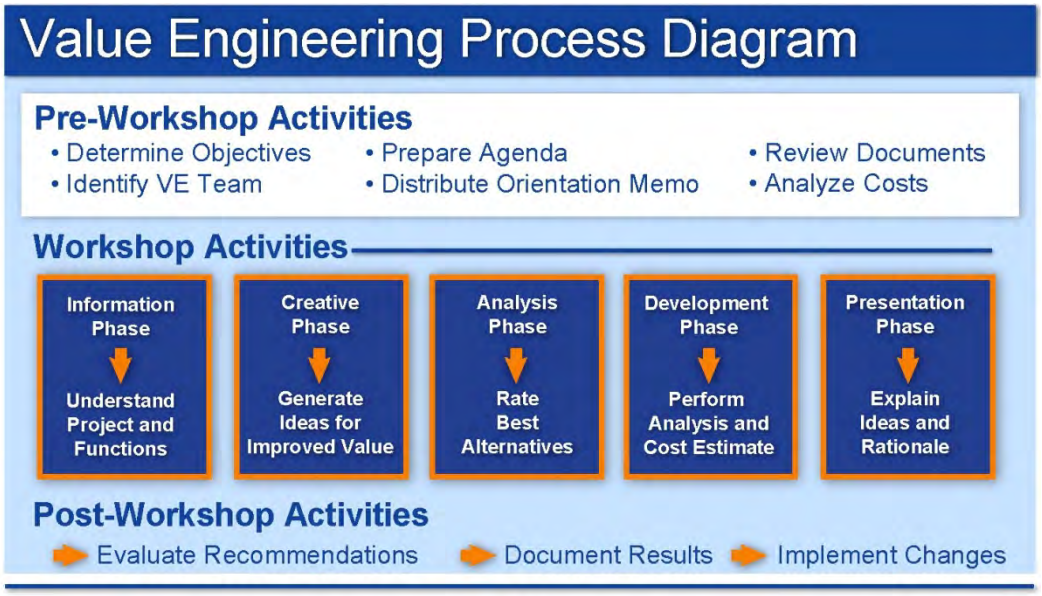

EXHIBIT 2-1
CH2M HILL's VE process

During the VE study, the VE Team followed the six-step format prescribed by the Society of American Value Engineers (SAVE) to accomplish this study. The steps of the VE study are described below:

Information. The VE Team reviewed the existing design to identify basic functions that are critical to the project and to analyze where potential cost savings could be significant. This information was based on their review of MWH's design documents and information presented during the Orientation Meeting on the first day of the workshop by Jeff Allred, EMWD project engineer, and Jim Borchardt of MWH, the Design Team project manager.

Creative. The VE Team selected areas and functions for further analysis based on potential cost-saving opportunities and potential for functional improvement. A formal brainstorming session generated as many alternative methods as possible for achieving the selected objectives.

Analysis. Analysis was performed by listing alternatives and giving them a pass or fail rating. Several "cuts," based on the ratings, were made from the many generated alternatives. The advantages and disadvantages of each selected idea were discussed by the team to further refine the concept being proposed. Those alternatives that were not screened out went on to the development phase.

Development. A rigorous economic analysis of alternative ideas allowed life-cycle costing (where applicable) to be done on a present worth basis. Life-cycle calculations for the project considered future replacement and operation and maintenance costs, as well as capital costs, where applicable. A detailed technical examination followed, including specific quantities, costs, and calculations for ideas shown to have potential for savings.

Report. All VE Team ideas, calculations, and cost analyses were recorded during the process and compiled into "proposals" for this document. A presentation of the Preliminary Report was made to EMWD and the Design Team on the final day of the VE study and each proposal was explained by the VE Team members.

Implementation. Following the presentation of this Preliminary Report, EMWD and the MWH Design Team evaluated the VE ideas and developed a response to each. Their comments are included in Appendix B of this Final Report.

2.2 VE Workshop Participants

The six members of the VE study team are listed in Table 2-1.

TABLE 2-1
VE Team

VE Team Member	Organization	Telephone Number	Email Address
Mike Doleac, PE, Certified Value Specialist, VE Study Facilitator	CH2M HILL	425-233-3169	mdoleac@ch2m.com
Larry Fox, PE, Electrical and Instrumentation and Controls	CH2M HILL	480-377-6241	lfox@ch2m.com
Jim Lozier, PE, Process Engineer	CH2M HILL	602-549-0676	jlozier@ch2m.com
Carmen Quan, PE, Mechanical Engineer	CH2M HILL	714-435-6117	cquan@ch2m.com
Willie Paiz, CCM, Cost Estimator	CH2M HILL	480-377-6225	wpaiz@ch2m.com
Jodie Willson, Editor	CH2M HILL	720-286-0923	jwillson@ch2m.com

Table 2-2 lists the attendees of the Orientation Meeting held for the VE Team on August 23, 2011, as well as the attendees at the Presentation Meeting held August 25, 2011, when the VE Team presented their proposals and the Preliminary Report at the conclusion of the study.

TABLE 2-2
Orientation and Presentation Meeting Attendees

Attendee	Organization	Orientation Meeting	Presentation Meeting	Telephone Number	Email Address
Jeff Allred	EMWD	✓	✓	951-928-3777, ext. 4296	allredjeff@emwd.org
Jim Borchardt	MWH	✓	✓	626-568-6287	james.borchardt@mwhglobal.com
Dave Brown	EMWD	✓	✓	951-928-3777, ext. 6269	browne@emwd.org
Mike Doleac	CH2M HILL	✓	✓	425-233-3169	mdoleac@ch2m.com
Lawrence Fox	CH2M HILL	✓	✓	480-377-6241	lfox@ch2m.com
Khos Ghaderi	EMWD		✓	951-928-3777	ghaderik@emwd.org
Jayne Joy	EMWD	✓		951-928-3777, ext. 6241	joyj@emwd.org
Greg Kowalski	EMWD	✓	✓	951-928-3777, ext. 4466	kowalskg@emwd.org
Phil Lancaster	EMWD – Water Operations	✓	✓	951-928-3777, ext. 7303	lancastp@emwd.org
Pei-Chin Low	MWH	✓	✓	626-568-6999	pei-chin.low@mwhglobal.com
Jim Lozier	CH2M HILL	✓	✓	602-549-0676	jlozier@ch2m.com
Ken Marshall	EMWD – Water Quality/Lab	✓		951-928-3777, ext. 6334	marshallk@emwd.org
Amy Mora	EMWD	✓		951-928-3777, ext. 6337	moraa@emwd.org
Joe Mouawad	EMWD	✓	✓	951-928-3777, ext. 4463	mouawadj@emwd.org
Willie Paiz	CH2M HILL	✓	✓	480-377-6225	wpaiz@ch2m.com
Carmen Quan	CH2M HILL	✓	✓	714-435-6117	cquan@ch2m.com
Jodie Willson	CH2M HILL	✓	✓	720-286-0923	jwillson@ch2m.com

2.3 VE Workshop Agenda

The agenda for the 3-day VE workshop is described in Table 2-3.

TABLE 2-3
VE Workshop Agenda

Day	Time	Activity
Tuesday, Aug. 23	8:00 to 10:00 a.m.	Orientation meeting: team member introductions and opening remarks, Owner and Design Team presentation of project to VE Team
	10:00 a.m. to 12:00 p.m.	Document review and cost model analysis

TABLE 2-3
VE Workshop Agenda

Day	Time	Activity
Tuesday, Aug. 23	12:00 to 1:00 p.m.	Lunch and check messages
(continued)	1:00 to 6:00 p.m.	Functional analysis and identification of cost drivers and brainstorming
Wednesday, Aug. 24	8:00 a.m. to 12:00 p.m.	Continue brainstorming and concept development
	12:00 to 1:00 p.m.	Lunch and check messages
	1:00 to 3:00 p.m.	Concept analysis, idea comparison, rank alternatives
	3:00 to 6:00 p.m.	Screen alternatives and begin proposal development
Thursday, Aug. 25	8:00 a.m. to 12:00 p.m.	Proposal development and calculations
	12:00 to 1:00 p.m.	Lunch and check messages
	1:00 to 2:00 p.m.	Finalize proposals and prepare Preliminary Report
	2:00 to 4:00 p.m.	Presentation to Owner and Design Team
	4:00 p.m.	Adjourn

2.4 Brainstormed Ideas

The creative stage of a VE study is the brainstorming phase. During this phase, the VE Team generated as many ideas, processes, or methods as possible to fulfill the basic functions that the project under study must perform. The ideas were not evaluated during this phase. Table 2-4 lists the ideas that were brainstormed during the study.

The VE facilitator then led the VE Team through an exercise of screening each brainstormed idea based on the idea's potential for functional improvement. The disposition column in the table identifies whether the idea was passed for further evaluation and possible development into a proposal (P for pass), was not further developed (F for fail), was combined with another idea (C), or was included as a Note to the Designer (NTD).

TABLE 2-4
Brainstormed Ideas List

	Brainstormed Idea	Disposition
1	Use the existing clean-in-place neutralization tank instead of adding a new one at the Reject Recovery Facility (RRF)	P
2	Use a plastic tank for the equalization with end suction centrifugal feed pumps rather than concrete and submersibles	P
3	Move the RRF north about 100 feet	P
4	Use a steel tank rather than concrete for membranes	F
5	Eliminate the redundant programmable logic controller (PLC)	NTD
6	Put the PLC in an air-conditioned space	NTD

TABLE 2-4
Brainstormed Ideas List

	Brainstormed Idea	Disposition
7	Use more standard kilo-amperes interrupting capacity (kAIC)-rated motor control center (MCC) if supported by documentation	P
8	Use common feed fuse disconnect for valves	P
9	Remove the cover superstructure and only extend the cover over the valves between the buildings	P, C with 38
10	Make the catwalk solid so it serves as a shade	F
11	Eliminate the monorail and use a portable crane to remove the membranes (make covers out of fiberglass)	P, C with 28
12	Eliminate one flow meter and put it upstream of the Tee	F
13	Eliminate the hydrochloric acid and use citric acid	P, C with 40
14	Does the existing facility have an adequate amount of sodium hydrochloride?	NTD
15	Use shelf spares for the blowers and compressors and clean-in-place (CIP) pump and not be redundant	P
16	Use the existing back pulse tank to back pulse the membranes	P
17	Increase the minimum flow set point for the RRF; the .1 million gallon per day (mgd) flow rate is too low for the minimum; discharge into the sewer instead	NTD
18	Note 20 on page GE-3 (pad over the floor trench)	NTD
19	Use coating on pipe instead of cathodic protection to protect the existing pipe without corrosion protection	NTD
20	Provide corrosion protection on all metals near the top of the tank head space because of chlorine vapors; replace grating with covers	NTD
21	Eliminate the overflow structure on the membrane tanks and replace with pipe	P
22	Use induction lighting rather than high pressure sodium in the building	NTD, C with 23
23	Add skylights to the roof and translucent panels	NTD, C with 22
24	Coordinate the designation of control packages between GE and MWH drawings	NTD
25	Consider soft starts for 50-horsepower (hp) motors	NTD, C with 26
26	Consider using variable frequency drives on all motors—greater than 20 hp for Southern California Edison grant benefits	NTD, C with 25
27	Lower the tank 3 feet if the eductors can work at a lower level	P, C with 37
28	Delete the aluminum grating and use corrosion-proof covers over the membrane tanks	P, C with 11
29	Put the valves and pipe above grade for easy access and eliminate the pipe trench in the building	P
30	Consider a packaged plant from GE	F
31	Need consistent motor drive callouts between GE and MWH and chlorine residual analyzers	NTD

TABLE 2-4
Brainstormed Ideas List

	Brainstormed Idea	Disposition
32	Add a power meter on the process to monitor energy usage	NTD
33	Consider adding circulation piping to the CIP; it is not shown on the process and instrumentation diagram	NTD
34	Why is GE not proposing the low energy aeration process?	P
35	Consider 120/208 three-phase transfer for balance on the MCC; breaker for XFMR-1 is under-sized for 30 kilovolt-ampere single-phase application	NTD
36	Reduce conservatism in membrane design; eliminate third cassette/reduce tank size (existing final subgroup operating at 12 gallons per square foot per day)	P
37	Use rotary lobe pumps (Vogelsang) for permeate/back pulse	P, C with 30
38	Raise ground surface versus catwalk (ergonomics)	P, C with 9
39	GE package PLC diagrams are missing input/output (I/O) for equipment failure and open and close outputs to valves; re-review package system I/O diagrams	NTD
40	Consider using sulfuric acid instead of hydrochloric acid	P , C with 13
41	Confirm conduit specification to client prior to writing specification (i.e., polyvinyl chloride [PVC] coated aluminum rather than PVC coated rigid galvanized conduit	NTD

Legend:
P = Pass
F = Fail
C = Combined with another idea for Proposal development or for a Note to Designer
NTD = Note to Designer

SECTION 3

VE Proposals

This section includes the proposals developed by the VE Team during the 3-day VE study of the 50 percent design of the PWFP Reject Recovery Facility project. Each proposal contains the VE Team's evaluation of the proposed idea, including assumptions, estimated cost savings, sketches, other supporting material, and overall recommendation.

CH2MHILL

Value Engineering Proposal No. 1

Date: August 24, 2011 Project Name: Perris WFP Reject Recovery VE Study

Proposal Description

Use the existing clean-in-place (CIP) neutralization tank instead of adding a new one at the Reject Recovery Facility (RRF).

Initial Savings +	Future Savings =	Present Worth Savings
$108,000	$0	$108,000

Advantages	Disadvantages
Prevents the need to increase the footprint of the existing RRF	Requires waiting to transfer the spent CIP from the RRF until the CIP neutralization for the PWFP is completed
Eliminates the addition of sodium hydroxide and sodium bisulfite tranfer pumps at the existing chemical facility	Requires adding a 6-inch-diameter pipe to convey the spent CIP solution from the RRF to the existing CIP neutralization pump (see sketch 1)
Eliminates the addition of the sodium hydroxide and sodium bisulfite pipes between the existing chemical facility and the new RRF	
Uses the existing infrastructure (pumps and pipe) to dispose of the neutralized CIP from the RRF	
Uses one of the two CIP pumps to transfer the spent CIP from the RRF to the existing CIP neutralization tank	
Allows resizing of the new 6-inch RRF membrane concentrate from the RRF to the existing equalization tank, because it would only need to convey the reject from the RRF	

Discussion

The existing CIP neutralization tank has an operating capacity of 23,600 gallons (side water depth [SWD] of 7.5 feet). Each of the existing membrane tanks is operated at 7 feet of SWD (volume 22,000 gallons). Approximately one CIP is done per day per tank per month. The new CIP neutralization tank is occupied and emptied in approximately 4 hours. After completing the daily CIP on the existing PWFP, the 9,600 gallons (one volume of RRF-spent CIP) could be transferred to the existing CIP neutralization tank for treatment and disposal.

Sketches

See attached.

Calculations

No. of Hours the CIP Neutralization Tank is in Use by the PWFP:

Approximately 1.5 hours to transfer the spent CIP from one of the PWFP membrane tanks to the CIP neutralization tank.

Approximately 1 hour to perform the neutralization.

Approximately 2 hours to empty the CIP neutralization tank.

Total of above items = 1.5 + 1 + 2 = 4.5 hours

This will leave approximately 3.5 hours to perform the transfer, neutralization, and disposal of the RRF-spent CIP.

Cost Estimate

See attached.

Assumptions

One acid CIP and one hypochlorite CIP are needed at the existing PWFP per membrane tank per day per month (this requires 24 days in 1 month).

Membrane tank drain pump capacity = 300 gallons per minute (gpm).

CIP neutralization tank drain pump capacity = 300 gpm.

Documentation

Design criteria in the Bid Documents for the PWFP Phase II – Expansion to 20 million gallons per day.

Conclusion

This proposal will prevent the footprint of the existing RRF from being increased, eliminate equipment (additional CIP neutralization tank, sodium hydroxide and sodium bisulfite transfer pumps and piping), and allow better utilization of the existing infrastructure while providing savings to EMWD.

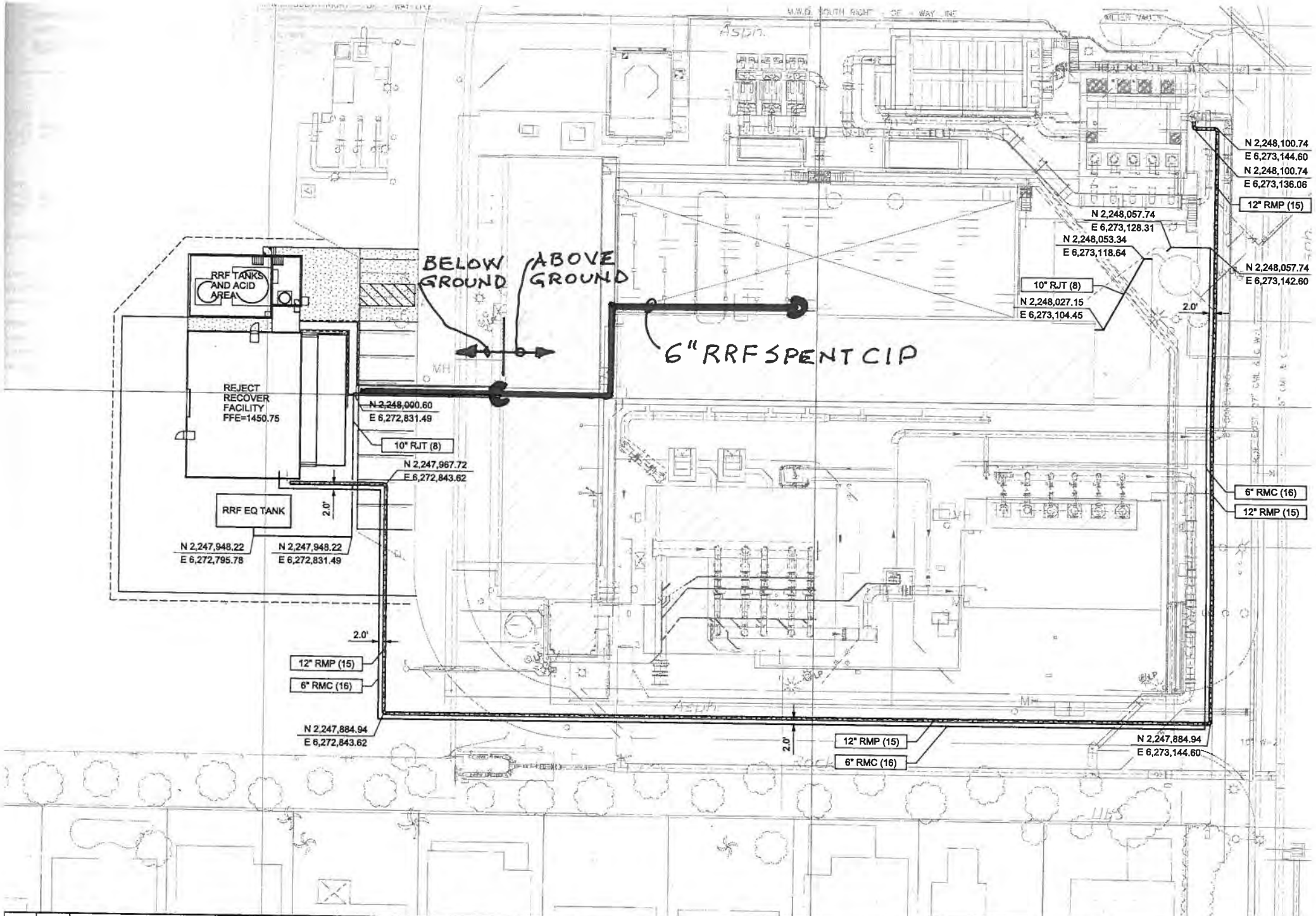

REVISIONS					
DATE	INITIAL	DESCRIPTION	APP'D	DATE	

APPROVED BY:

DIRECTOR OF ENGINEERING DATE

REFERENCES

EASTERN MUNICIPAL WATER DISTRICT

PROJECT MANAGER DATE

INITIAL DATE

		DATE
DESIGNED	G BEHNKE	
DRAWN	G BEHNKE	
TRACED	N/A	
CHECKED	CHECKED	
SUBMITTED		

SCALE:

EASTERN MUNICIPAL

EASTERN MUNICIPAL WATER DISTRI
RIVERSIDE COUNTY, CALIFORNIA
PERRIS WATER FILTRATION PLANT

1/2

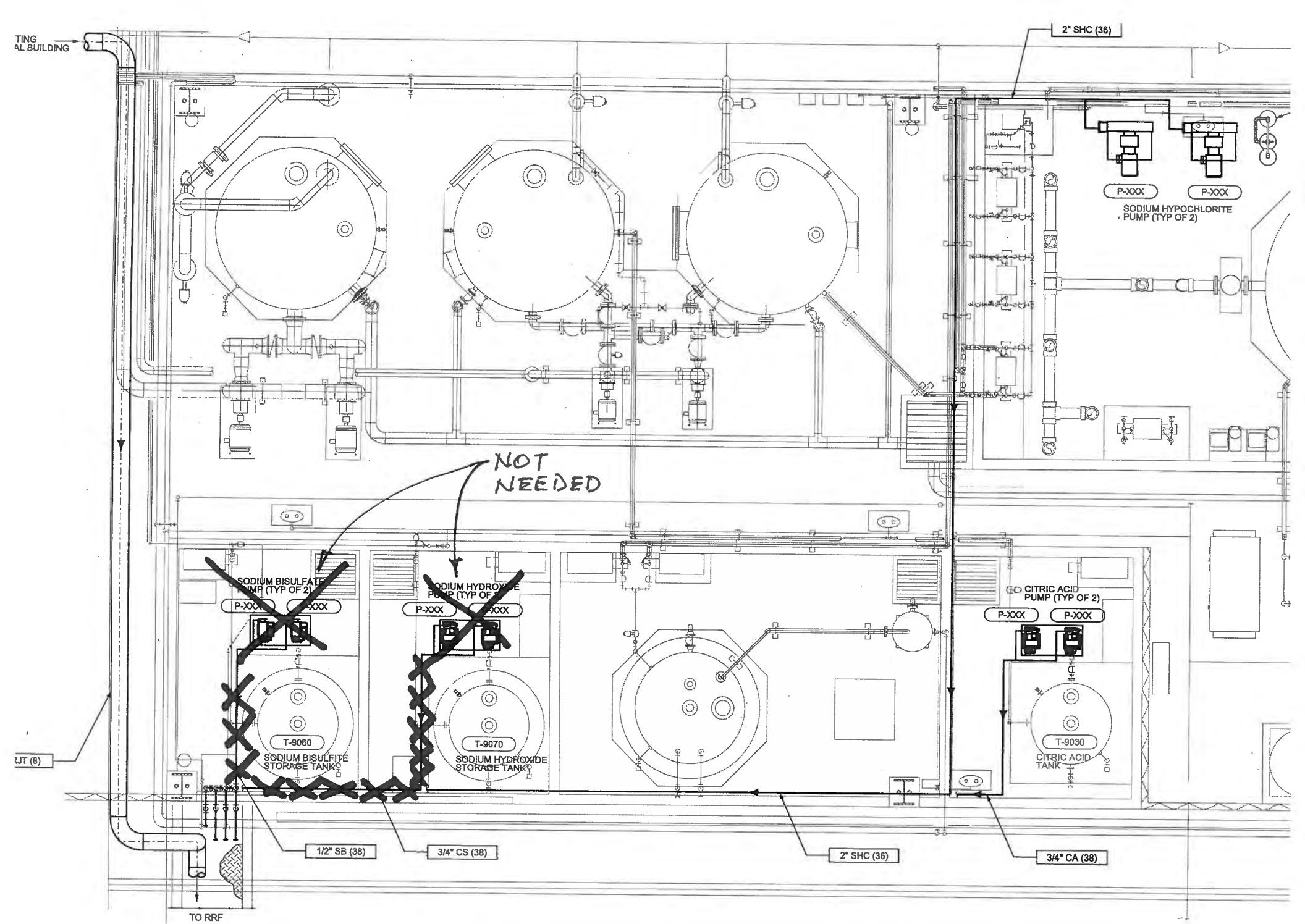

EVELOPMENT PHASE - 8/12/2011
T FOR CONSTRUCTION
is an interim document and not suitable for
s an interim document, it may contain data
y inaccurate or incomplete and is not to be
t the express written consent of the preparer.

2/2

CH2M HILL - Project Estimate for VE

Project:	PWFP - Reject Recovery Facility	**Estimate Date:**	**8/24/2011**
Project No.:		**Midpoint of Construction:**	**Oct 2012**
Location:	Perris, CA	**Location Factor:**	**As Noted**
Proposal #:	1	**Estimate Prepared By:**	**Paiz**
Descr:	Use existing CIP neutralization tank rather than adding a new tank and system	**Estimate Reviewed By:**	**VE Team**

Spec Div	Description	Quan	Unit	Unit Cost	Loc Factor	Subtotal	Total	
	Cost to add the new 6" pipe to transfer the RRF-spent CIP							
	Add 6" RRF spent CIP, above ground CPVC, Sch 80	160	LF	$88	1.00	$14,080		Means 2011 Cost Data
	Add 6" RRF spent CIP, in pipe trench CPVC, Sch 80	60	LF	$68	1.00	$4,080		Means 2011 Cost Data
	Subtotal						$18,160	
	Allowance for fittings	15%					2,724	
	Total						20,884	
	Savings not to install additional CIP neutralization							
	CIP Tank - 9,600 gallons	1	EA	16,800	1.00	$16,800		Means 2011 cost data
	Sodium Hydroxide Pumps	2	EA	700	1.00	$1,400		Means 2011 cost data
	Sodium Bisulfate Pumps	2	EA	700	1.00	$1,400		Means 2011 cost data
	Piping - CPVC Sch 80 1/2 and 3/4 inch	150	LF	12	1.00	$1,800		Means 2011 cost data
	Allowance misc pipe fittings and valves	40%				$720		
	Additional concrete for footprint of building needed	27	CY	$800	1.00	$21,333		Design cost estimate
	Additional pre-engineered metal building	360.00	SF	$85	1.00	$30,600		Design cost estimate
	Subtotal						74,053	
	Allowance for misc items	25%					18,513	
	Total						92,567	
	SUBTOTAL						**$71,683**	
	Add combined markups (see notes)	**50%**					**$35,841**	
	TOTAL CONSTRUCTION COST						**$108,000**	

Notes:
1) Breakdown for combined markups include the following:

Contractor Markups:	
Overhead	**10%**
Profit	**5%**
Mobilization, Bonds & Insurance	**7%**
Estimating Contingency	**20%**
Escalation Factor	**3%**
Market Conditions Factor	**5%**
Total combined markups	**50%**

CH2MHILL

Value Engineering Proposal No. 2

Date: August 24, 2011 Project Name: Perris WFP Reject Recovery VE Study

Proposal Description

Use a plastic tank for the RRF equalization with end suction centrifugal feed pumps instead of a concrete tank and submersible pumps.

Initial Savings +	Future Savings =	Present Worth Savings
$(18,000)	$28,750	$11,000

Advantages	Disadvantages
Easier construction and less construction time (slab-on-grade and tank installation)	Aesthetics for view to neighbors
Horizontal-end-suction centrifugal pumps are more efficient than submersible pumps	May increase noise

Discussion

The existing equalization tank is a fiberglass reinforced plastic (FRP) tank with an operating capacity of 14,000 gallons (approximately 14-foot diameter by 15-foot height). The dimensions of the new RRF equalization tank (FRP material) with an operating volume of 18,000 gallons (plus 1 foot for suction at bottom and 2.5 feet of freeboard) are 14 feet in diameter by 18 feet, 6 inches tall.

The efficiency of a horizontal-end-suction centrifugal pump with a capacity of 550 gallons per minute (gpm) at 13 feet of total dynamic head (TDH) is typically better than that of submersible pumps. Each horizontal-end-suction centrifugal pump would require a 3-horsepower (hp) motor rather than a 7.5-hp motor for each submersible pump (based on the 550 gpm at 13 feet of TDH). Thus, using horizontal-end-suction centrifugal pumps would require less power consumption.

Sketch

See attached.

Calculations

Estimated initial savings: $-18,000 + Estimated Future Savings: $28,750 = Present Worth Savings of $10,750 → say $11,000.

Cost Estimate

See attached.

Conclusion

Because this proposal offers the opportunity to shorten the construction time and lower power consumption and associated energy costs, the VE Team recommends the Design Team consider this proposal for implementation.

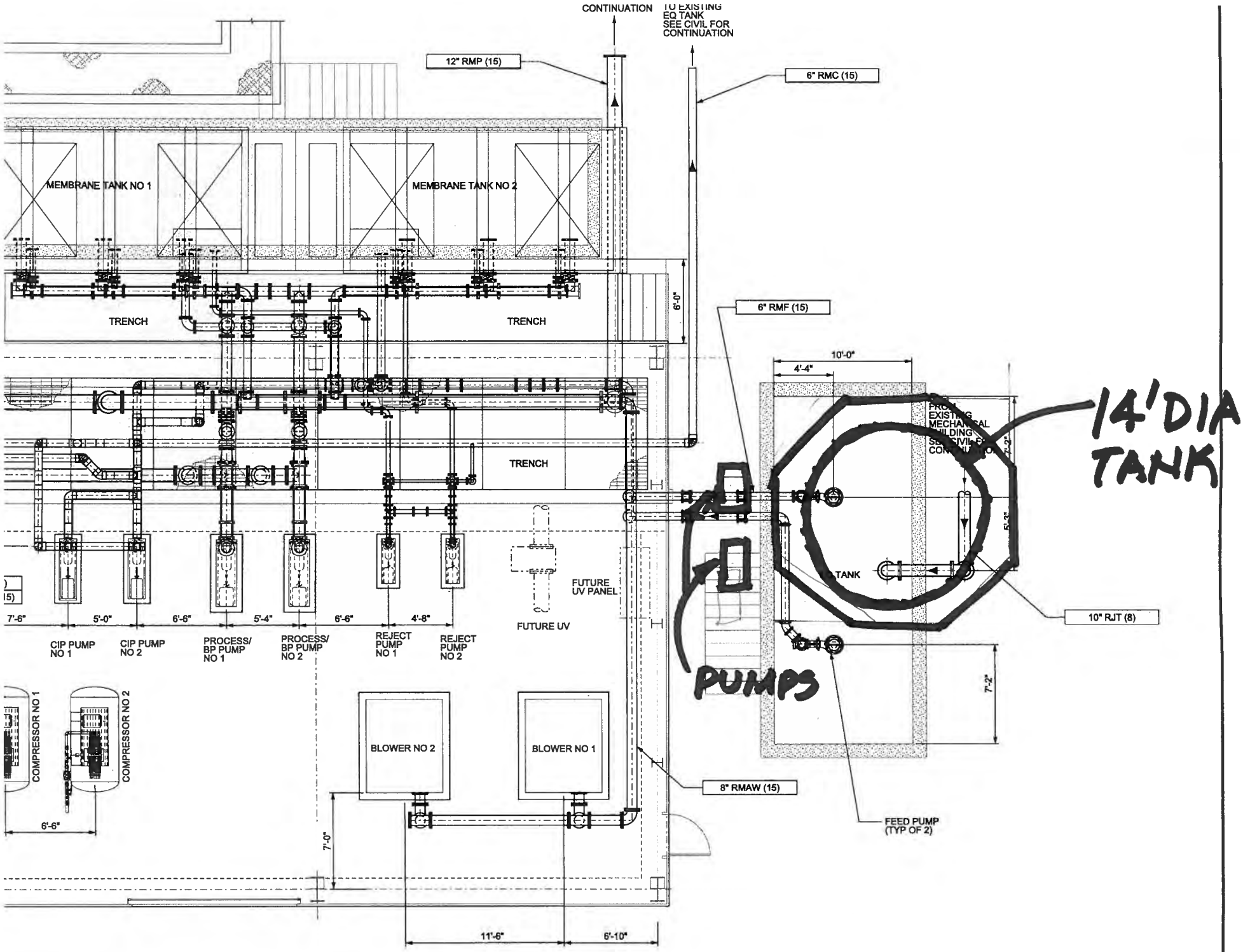
CONTINUATION
TO EXISTING EQ TANK SEE CIVIL FOR CONTINUATION
12" RMP (15)
6" RMC (15)
MEMBRANE TANK NO 1
MEMBRANE TANK NO 2
TRENCH
TRENCH
TRENCH
6'-0"
6" RMF (15)
10'-0"
4'-4"
14' DIA TANK
EQ TANK
10" RJT (8)
5'-3"
7'-2"
PUMPS
FUTURE UV PANEL
FUTURE UV
7'-6"
5'-0"
6'-6"
5'-4"
6'-6"
4'-8"
CIP PUMP NO 1
CIP PUMP NO 2
PROCESS/ BP PUMP NO 1
PROCESS/ BP PUMP NO 2
REJECT PUMP NO 1
REJECT PUMP NO 2
COMPRESSOR NO 1
COMPRESSOR NO 2
6'-6"
BLOWER NO 2
BLOWER NO 1
8" RMAW (15)
FEED PUMP (TYP OF 2)
7'-0"
11'-6"
6'-10"

CH2M HILL - Project Estimate for VE

Project:	PWFP - Reject Recovery Facility	**Estimate Date:**	**8/24/2011**
Project No.:		**Midpoint of Construction:**	**Oct 2012**
Location:	Perris, CA	**Location Factor:**	**As Noted**
Proposal #:	2	**Estimate Prepared By:**	**Paiz**
Descr:	Use a plastic tank for the equalization with end suction centrifugal feed pumps instead of a concrete tank and submersible pumps	**Estimate Reviewed By:**	**VE Team**

Spec Div	Description	Quan	Unit	Unit Cost	Loc Factor	Subtotal	Total	
	Origional design deleted:							
	Concrete							
	Reduction of concrete - SOG	30	CY	$800	1.00	$24,059		Design estimate
	Reduction of concrete - WALLS	31	CY	$800	1.00	$24,889		Design estimate
	Reduction of concrete - ELEV SLAB	12	CY	$800	1.00	$9,600		Design estimate
	Metals							
	Ladder	24	VLF	$90	1.00	$2,160		Means 2011 cost data
	Handrail	70	LF	$139	1.00	$9,730		Means 2011 cost data
	Stairway 4-0 wide	20	RISERS	$200	1.00	$4,000		Means 2011 cost data
	Access hatches - 2-7 x 3-6	2	EA	$1,250	1.00	$2,500		Means 2011 cost data
	Access hatches 2-0 x 2-0	2	EA	$900	1.00	$1,800		Means 2011 cost data
	Equipment							
	Submersible pumps	2	EA	$7,200	1.00	$14,400		Estimator's judgement
	Allowance for misc items (incl earthwork, piping)	**20%**				**18,628**		
	Total						**111,766**	
	New proposed EQ Tank - FRP							
	Concrete - SOG foundation	15	CY	$800	1.00	$12,000		Design estimate
	FRP Tank - 18,000 gallons	1	EA	$55,000	1.00	$55,000		
	Pumps - horizontal-end-suction centrifugal pumps	2	EA	$4,300	1.00	$8,600		Estimator's judgement
	Allowance for misc items (incl earthwork, piping)	**20%**				**15,120**		
	Total						**123,748**	
	Difference between original design and proposed change						**-11,982**	
	Energy savings ($2500/year x 11.5)						**28,750**	
	SUBTOTAL						**-$11,982**	
	Add combined markups (see notes)	**50%**					**-$5,991**	
	TOTAL CONSTRUCTION COST					**savings**	**-$18,000**	

Notes:

1) Breakdown for combined markups include the following:

Contractor Markups:	
Overhead	**10%**
Profit	**5%**
Mobilization, Bonds & Insurance	**7%**
Estimating Contingency	**20%**
Escalation Factor	**3%**
Market Conditions Factor	**5%**
Total combined markups	**50%**

CH2MHILL

Value Engineering Proposal No. 3

Date: August 24, 2011 Project Name: Perris WFP Reject Recovery VE Study

Proposal Description

Use shelf spares for the blowers and compressors instead of installed redundant units.

Initial Savings +	Future Savings =	Present Worth Savings
$120,000	$0	$120,000

Advantages	Disadvantages
Will provide electrical savings (the motor starters/circuit breaker for the spare units will not be required because they are not installed)	Operations may prefer the installed spare units
Will free space in the RRF building to allow installation of the GE-provided control panel for the RRF membrane system	

Discussion

The spare units for the permeate and reject pumps at the RRF are being supplied as shelf spares and because this facility is not a critical facility that MUST operate at all times, the blower and air compressor spares could also be shelf spares.

In addition, the existing equipment layout for the RRF building does not show the location of the GE-supplied control panel for the RRF membrane system. Elimination of the installed spares for the blower and air compressor will free the space needed to install this control panel.

Sketches

See attached.

Calculations

N/A.

Cost Estimate

See attached.

Assumptions

N/A.

Documentation

N/A.

Conclusion

Given that the RRF is not a critical facility, the Design Team may want to consider this proposal to allow installation of the GE-provided control panel without needing to increase the RRF building footprint.

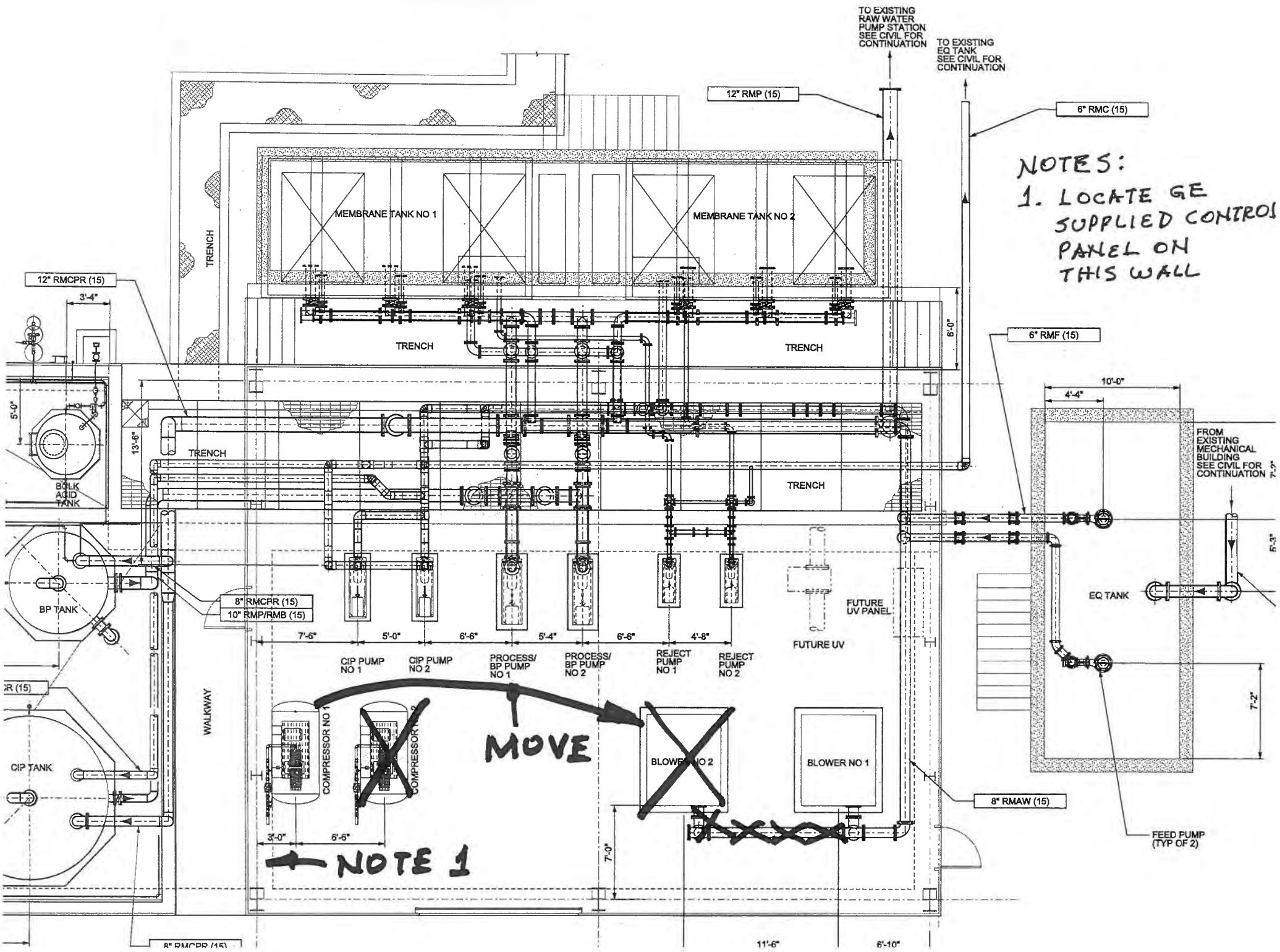
TO EXISTING RAW WATER PUMP STATION SEE CIVIL FOR CONTINUATION
TO EXISTING EQ TANK SEE CIVIL FOR CONTINUATION
12" RMP (15)
6" RMC (15)
NOTES:
1. LOCATE GE SUPPLIED CONTROL PANEL ON THIS WALL
MEMBRANE TANK NO 1
MEMBRANE TANK NO 2
TRENCH
12" RMCPR (15)
3'-4"
8'-0"
6" RMF (15)
10'-0"
4'-4"
FROM EXISTING MECHANICAL BUILDING SEE CIVIL FOR CONTINUATION
5'-0"
13'-6"
BULK ACID TANK
BP TANK
8" RMCPR (15)
10" RMP/RMB (15)
7'-6"
5'-0"
6'-6"
5'-4"
6'-6"
4'-8"
CIP PUMP NO 1
CIP PUMP NO 2
PROCESS/ BP PUMP NO 1
PROCESS/ BP PUMP NO 2
REJECT PUMP NO 1
REJECT PUMP NO 2
FUTURE UV PANEL
FUTURE UV
EQ TANK
WALKWAY
MOVE
COMPRESSOR NO 1
COMPRESSOR NO 2
BLOWER NO 2
BLOWER NO 1
CIP TANK
8" RMAW (15)
FEED PUMP (TYP OF 2)
7'-2"
3'-0"
6'-6"
NOTE 1
7'-0"
11'-6"
6'-10"

CH2M HILL - Project Estimate for VE

Project:	PWFP - Reject Recovery Facility	**Estimate Date:**	**8/24/2011**
Project No.:		**Midpoint of Construction:**	**Oct 2012**
Location:	Perris, CA	**Location Factor:**	**As Noted**
Proposal #:	3	**Estimate Prepared By:**	**Paiz**
Descr:	Use shelf spares for blowers and compressors instead of installed redundant units	**Estimate Reviewed By:**	**VE Team**

Spec Div	Description	Quan	Unit	Unit Cost	Loc Factor	Subtotal	Total	
	Proposed changes:							
	Installing an air compressor mounted on an 80-gallon air receiver (17.2 acfm at 175 psig) - LABOR ONLY	**1**	**EA**	$1,163	1.00	$1,163		Means 2011 cost data
	Installing a blower (1,358 scfm at 4.9 psig, 50 hp unit) - LABOR ONLY	**1**	**EA**	$2,326	1.00	$2,326		Means 2011 cost data
	Subtotal						$ 3,490	
	Allowance for misc set up	40%					$ 1,396	
	Total						$ 4,885	
	Expand the building for GE/Zenon Control Panel at 8' x 52':							
	Additional concrete for footprint of building needed	31	CY	$800	1.00	$24,652		Design cost estimate
	Additional pre-engineered metal building	416	SF	$85	1.00	$35,360		Design cost estimate
	Subtotal						60,012	
	Allowance for misc items	25%					15,003	
	Total						75,015	
	SUBTOTAL						**$79,900**	
	Add combined markups (see notes)	**50%**					**$39,950**	
	TOTAL CONSTRUCTION COST						**$120,000**	

Notes:

1) Breakdown for combined markups include the following:

Contractor Markups:	
Overhead	**10%**
Profit	**5%**
Mobilization, Bonds & Insurance	**7%**
Estimating Contingency	**20%**
Escalation Factor	**3%**
Market Conditions Factor	**5%**
Total combined markups	**50%**

Value Engineering Proposal No. 4

Date: August 24, 2011 Project Name: Perris WFP Reject Recovery VE Study

Proposal Description

Eliminate the overflow structure on the membrane tanks and replace with pipe.

Initial Savings +	Future Savings =	Present Worth Savings
$10,000	$0	$10,000

Advantages	Disadvantages
Minimizes the footprint for the RRF membrane tanks	Eliminates the space on top of the membrane tanks to service a cassette
	Requires increasing the overflow pipe diameter to 8 inches

Discussion

It is typical to locate a pipe on the side of a tank (including membrane tanks) that is above the operating water level to account for an overflow scenario. For the RRF project, the membrane tank overflow is the third line of defense to prevent water from a spillover. (The first is closing the reject valve that feeds the RRF and the second is stopping the RRF feed pumps in the RRF equalization tank).

The RRF already has a concrete landing area at grade level to service and inspect the membranes, which makes the landing on top of the concrete tanks redundant. Because servicing and inspecting a membrane cassette typically occurs infrequently, a portable shade area for operator comfort (similar to one used previously at the PWFP) could be used. Working on a concrete landing area at grade level is safer than working on one at a higher elevation.

Sketches

See attached.

Calculations

N/A.

Cost Estimate

See attached.

Assumptions

N/A.

Documentation

N/A.

Conclusion

The cost savings for this proposal are not significant, but eliminating the elevated landing will provide for a safer operation.

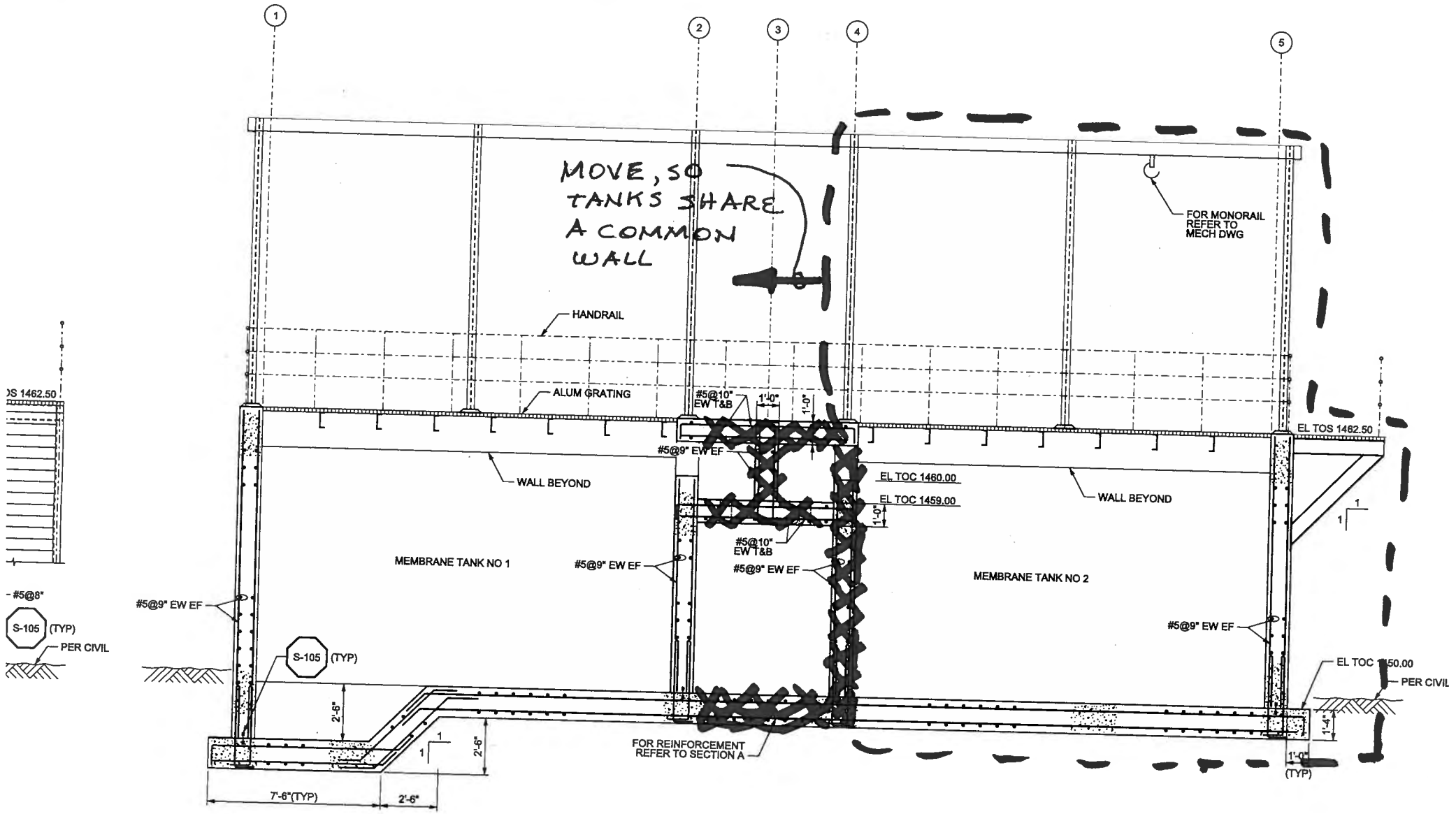
1
2
3
4
5
MOVE, SO TANKS SHARE A COMMON WALL
FOR MONORAIL REFER TO MECH DWG
HANDRAIL
ALUM GRATING
#5@10" EW T&B
1'-0"
1'-0"
#5@9" EW EF
EL TOS 1462.50
WALL BEYOND
EL TOC 1460.00
EL TOC 1459.00
1'-0"
WALL BEYOND
#5@10" EW T&B
MEMBRANE TANK NO 1
#5@9" EW EF
#5@9" EW EF
MEMBRANE TANK NO 2
#5@9" EW EF
#5@9" EW EF
S-105 (TYP)
PER CIVIL
S-105 (TYP)
EL TOC 1450.00
PER CIVIL
2'-6"
2'-6"
1
1
FOR REINFORCEMENT REFER TO SECTION A
1'-4"
1'-0" (TYP)
7'-6"(TYP)
2'-6"
OS 1462.50
#5@8"
S-105 (TYP)
PER CIVIL

SECTION B / S-3

CH2M HILL - Project Estimate for VE

Project:	PWFP - Reject Recovery Facility	**Estimate Date:**	**8/24/2011**
Project No.:		**Midpoint of Construction:**	**Oct 2012**
Location:	Perris, CA	**Location Factor:**	**As Noted**
Proposal #:	4	**Estimate Prepared By:**	**Paiz**
Descr:	Eliminate hydochloric acid and use citric acid	**Estimate Reviewed By:**	**VE Team**

Spec Div	Description	Quan	Unit	Unit Cost	Loc Factor	Subtotal	Total	
	Origional design deleted:							
	Reduction of concrete - SOG	6	CY	$800	1.00	$4,741		Design estimate
	Reduction of concrete - WALLS	6	CY	$800	1.00	$4,444		Design estimate
	Reduction of concrete - ELEV SLAB	6	CY	$800	1.00	$4,741		Design estimate
							$4,741	
	Allowance for misc items	**25%**					**1,185**	
	Total						**5,926**	
	SUBTOTAL						**$5,926**	
	Add combined markups (see notes)	**54%**					**$3,200**	
	TOTAL CONSTRUCTION COST						**$10,000**	

Notes:

1) Breakdown for combined markups include the following:

Contractor Markups:	
Overhead	**10%**
Profit	**5%**
Mobilization, Bonds & Insurance	**7%**
Estimating Contingency	**20%**
Escalation Factor	**7%**
Market Conditions Factor	**5%**
Total combined markups	**54%**

CH2MHILL

Value Engineering Proposal No. 5

Date: August 24, 2011 Project Name: Perris WFP Reject Recovery VE Study

Proposal Description

Bury a portion of the membrane tanks and (because of the eductor) use rotary lobe pumps instead of horizontal-end-suction centrifugal pumps for the permeate pumps.

Initial Savings +	Future Savings =	Present Worth Savings
$(25,000)	$0	$(25,000)

Advantages	Disadvantages
Burying a portion of a concrete tanks helps with overturning loads	The rotary lobe pumps would require a 25-horsephower (hp) motor instead of a 20-hp motor
By burying a portion of the membrane tanks, grade level could be located at a height that allows easy valve access to operations and maintenance personnel	
By burying a portion of the membrane tanks, the height profile of the membrane tank structure could be lowered if the monorail is not eliminated	
Eliminates the catwalk on the east side of the RRF membrane tanks	

Discussion

The use of horizontal-end-suction centrifugal pumps for the permeate pumps may be driving the elevation of the membrane tank (The VE Team could not confirm this with GE) to provide a flooded suction condition. But the implications of this requirement include a high elevation profile for the membrane tank facility, access issues for some of the valves, and higher overturning loads for the tank foundation design. The use of rotary lobe pumps (which have suction lift capacity) would eliminate the need for the high membrane tank elevation and the implications.

Sketches

See attached.

Calculations

N/A.

Cost Estimate

See attached.

Assumptions

The VE Team did not consider the ability to operate the pumps in reverse for back pulse operation.

Conclusion

This proposal will add cost to the RRF, but it will lower the profile of the RRF membrane tank facility, allow easier access to the valves on the side of the RRF membrane tanks, and improve the suction performance to the permeate pumps.

VE PROPOSAL

ORIGINAL DESIGN

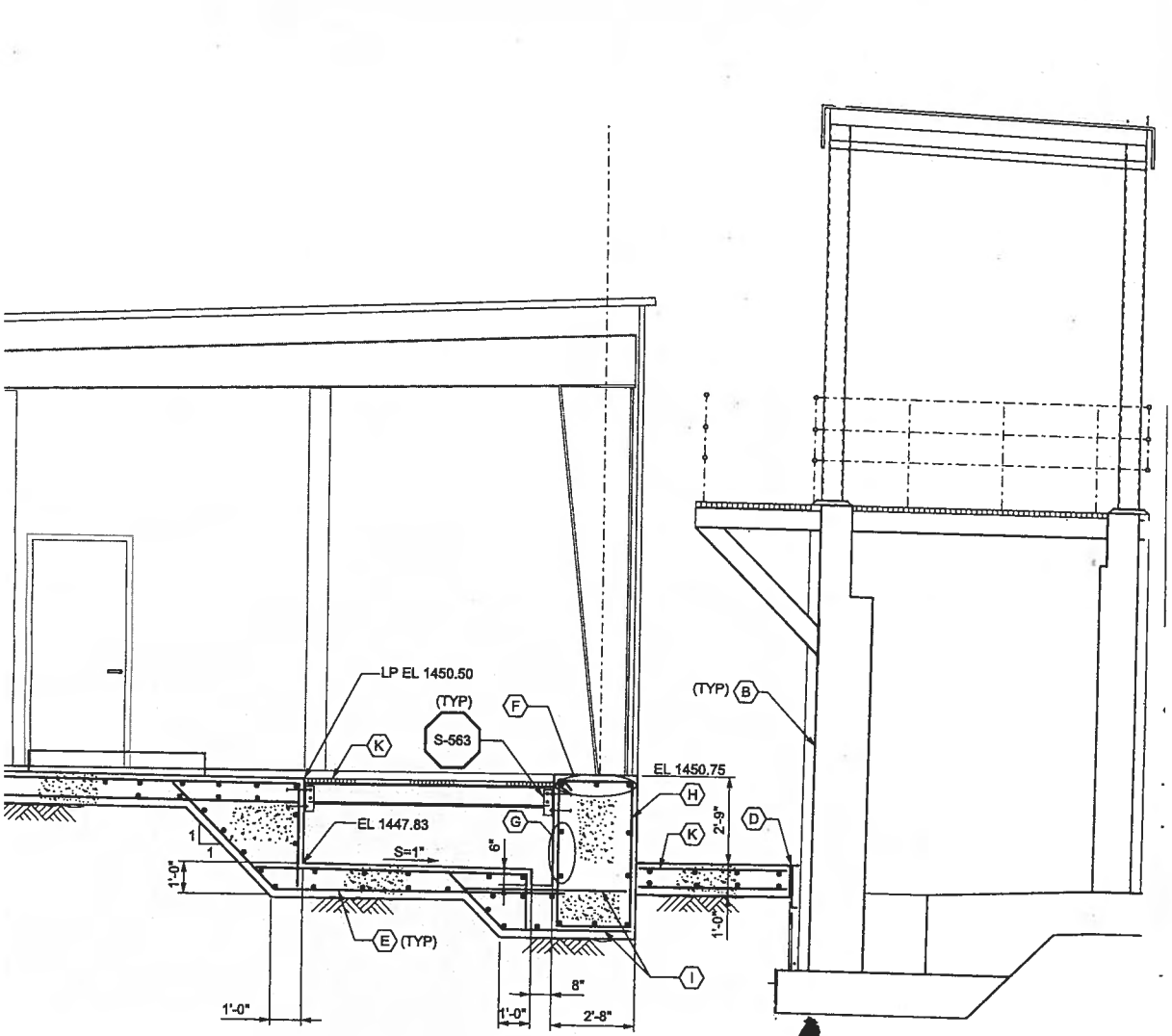

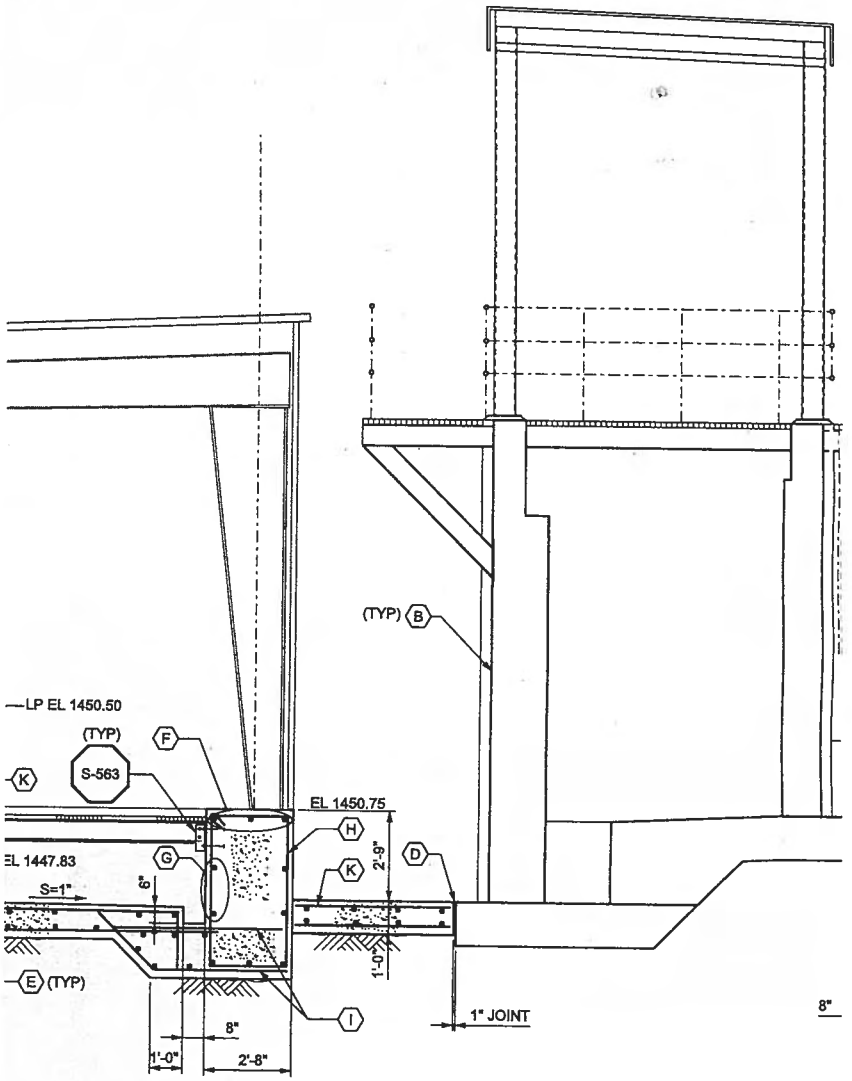

BURIED STRUCTURE

SECTION A
S-1

NS			APPROVED BY:	EASTERN MUNICIPAL WATER DISTRICT		DATE
ON	APP'D	DATE			DESIGNED P NGUYEN	
					DRAWN T MA	

	EASTERN MUNICIPAL WATER DISTRICT		DATE
		DESIGNED P NGUYEN	
		DRAWN T MA	

CH2M HILL - Project Estimate for VE

Project: PWFP - Reject Recovery Facility
Project No.:
Location: Perris, CA
Proposal #: 5
Descr: Bury a portion of the membrane tanks and (because of the eductor) use rotary lobe pumps instead of horizontal-end-suction centrifugal pumps for the permeate pumps

Estimate Date: 8/24/2011
Midpoint of Construction: Oct 2012
Location Factor: As Noted
Estimate Prepared By: Paiz
Estimate Reviewed By: VE Team

Spec Div	Description	Quan	Unit	Unit Cost	Loc Factor	Subtotal	Total	
	Proposed changes:							
	Earthwork - lower 3 ft (excavation and backfill)	118	CY	$20	1.00	$2,356		Estimator's judgement
	Add - rotary lobe pumps	2	EA	$30,800	1.00	$61,600		Estimator's judgement
	Subtotal						**$63,956**	
	Delete original design:							
	Permeate pumps	2	EA	$22,000	1.00	$44,000		Estimator's judgement
	Catwalk grating and support system	50	LF	$75	1.00	$3,750		Means 2011 Cost data
	Subtotal						**$47,750**	
	Difference between original design and proposed changes						**-$16,206**	
	SUBTOTAL						**-$16,206**	
	Add combined markups (see notes)	**50%**					**-$8,103**	
	TOTAL CONSTRUCTION COST						**-$25,000**	

Notes:
1) Breakdown for combined markups include the following:

Contractor Markups:	
Overhead	**10%**
Profit	**5%**
Mobilization, Bonds & Insurance	**7%**
Estimating Contingency	**20%**
Escalation Factor	**3%**
Market Conditions Factor	**5%**
Total combined markups	**50%**

Value Engineering Proposal No. 6

Date: August 24, 2011 Project Name: Perris WFP Reject Recovery VE Study

Proposal Description

Use the existing (stage 1) back pulse tank to back pulse stage 2 membrane cassettes.

Remarks

Back pulse intervals and durations for stage 1 and stage 2 membrane systems (as currently programmed by GE for stage 2 and as proposed for stage 2) are not known by the VE Team. The VE Team's assumed values are listed in the attached cost estimate spreadsheet. Based on these values, sufficient "off-line" time exists to allow use of the back pulse tank to serve as a permeate supply to stage 2. This must be confirmed with GE based on both current stage 1 operation and any changes in back pulse interval and duration associated with expansion to 24 million gallons per day (mgd), and potentially to 28 mgd.

Initial Savings +	Future Savings =	Present Worth Savings
$65,000	$0	$65,000

Advantages	Disadvantages
Avoids purchase and installation of stage 2 back pulse tank	Requires running an 8-inch polyvinyl chloride line from the stage 1 back pulse tank to the RRF building (inside proposed trench)
Reduces size of stage 2 RRF building associated with housing back pulse tank and associated piping and valving	Requires careful programming integration between operation of stage 1 and stage 2 membrane systems to avoid overlapping backpulses

Discussion

The stage 2 membrane system is currently designed with a dedicated 2,000-gallon back pulse tank. The existing stage 2 system has a 3,000-gallon back pulse tank that sits in close proximity to the stage 2 system and proposed piping corridor between the two facilities. Using the existing back pulse tank to supply ultrafiltration permeate for back pulsing the stage 2 membrane cassettes avoids the cost associated with the new back pulse tank (as well as associated piping, fittings, and valves) and potentially saves on the building costs for housing the tank and components.

Sketches

See attached.

Calculations

Calculations for assumed back pulse volumes, intervals, and durations are shown below.

Stage 1				**Stage 2**		
back pulse tank volume =	3000	gals		back pulse tank volume =	2000	gals
cassettes per tank =	12			cassettes per tank =	2	
subgroups per tank =	3			modules per cassette =	60	
cassettes per subgroup =	4			modules per tank =	120	
modules per cassette =	8					
area per module =	650	ft2		area per module =	340	ft2
membrane area per tank =	62400	ft2		membrane area per tank =	40800	ft2
membrane area per subgroup =	20800	ft2				
unit back pulse volume/subgroup =	0.144231					
unit back pulse volume/tank =	0.048077			unit back pulse volume/tank =	0.04902	
assumed train bp interval =	45	min		assumed bp interval =	30	min
assumed bp duration =	0.5	min		assumed bp duration =	0.5	min
no of trains =	5			no of trains =	2	
plant bp frequency=	9	min		plant bp interval=	15	min
none bp interval =	8.5	min		none bp interval =	14.5	min
Costs						
Deferred back pulse tank cost =			$ 7,000	assumes single wall FRP tank		
Deferred assoc. piping and valving =			$ 2,000			
Deferred building cost =			$ 28,852			
Misc on deferred costs =			$ 9,463			
Total deferred costs			$ 47,315			
New cost of permeate piping/valving/fittings =			$ 5,460			
Net cost savings =			$ 41,855			
Total costs savings =			**$ 64,457**			

Cost Estimate

See attached.

Assumptions

Assumptions are described under Remarks and shown in the attachment.

Conclusion

The VE Team recommends that the Design Team discuss this idea with GE. If GE is comfortable that stage 1 membrane system back pulse water can be supplied from the stage 1 tank without interfering with stage 1 back pulses (sufficient permeate available in tank to conduct all back pulses), then the VE Team recommends implementation of this proposal.

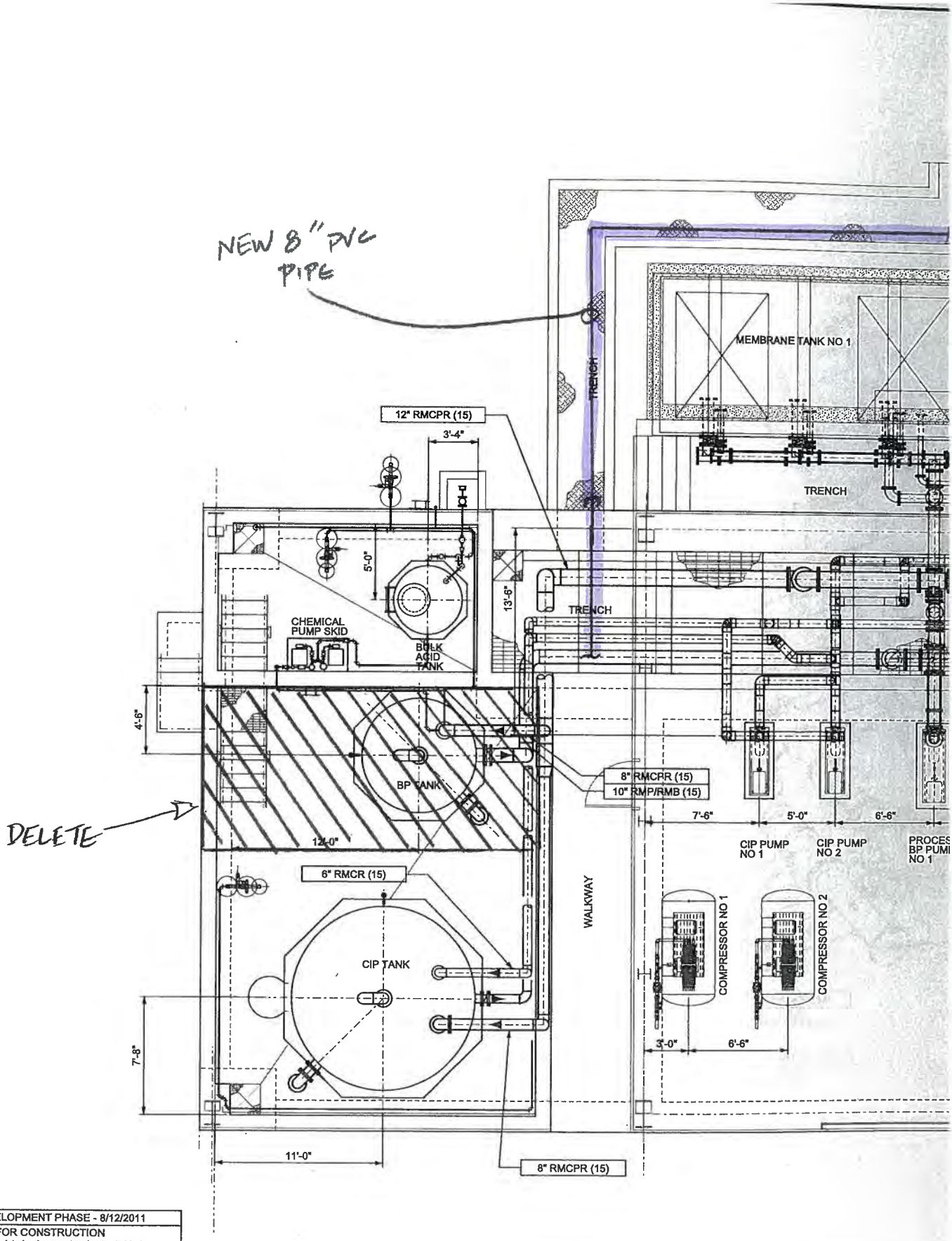

DESIGN DEVELOPMENT PHASE - 8/12/2011

NOT FOR CONSTRUCTION

This document is an interim document and not suitable for construction. As an interim document, it may contain data that is potentially inaccurate or incomplete and is not to be relied upon without the express written consent of the preparer.

WARNING
0 ½ 1
IF THIS BAR DOES NOT MEASURE 1" THEN DRAWING IS NOT TO SCALE

MWH®

NO.	DATE	INITIAL	REVISIONS DESCRIPTION	APP'D	DATE

APPROVED BY:

DIRECTOR OF ENGINEERIN

REFEREN

File: EMWD_M06.dgn Model: Layout1 ColorTable: bw.ctb DesignScript: MWH_Iplot_PenTable_V89.pen PlotScale: 0.083333:1 User: jemorris Plot Date: 12-AUG-2011 17:38

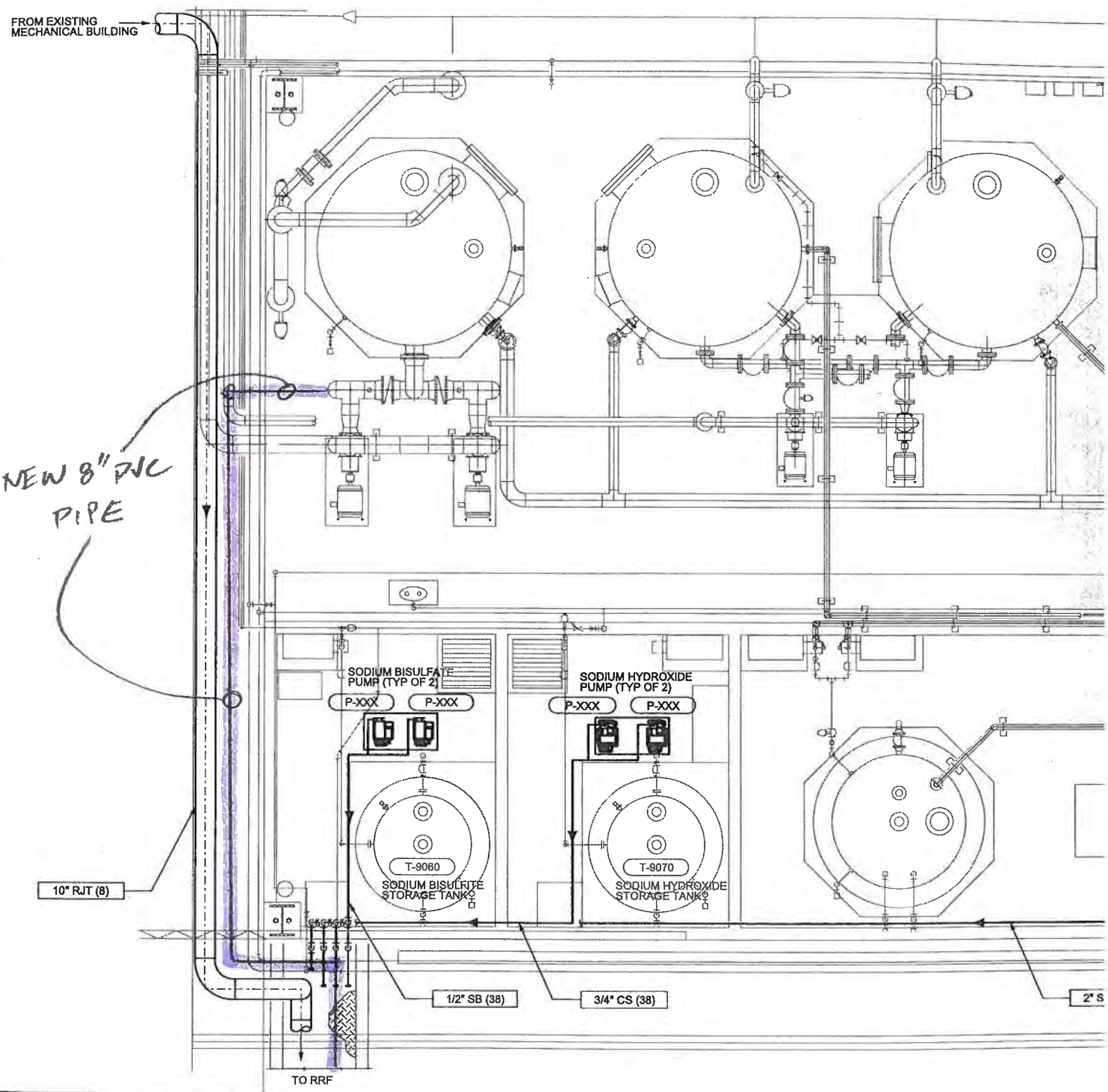

DESIGN DEVELOPMENT PHASE - 8/12/2011

NOT FOR CONSTRUCTION

This document is an interim document and not suitable for construction. As an interim document, it may contain data that is potentially inaccurate or incomplete and is not to be relied upon without the express written consent of the preparer.

WARNING
0 ½ 1
IF THIS BAR DOES NOT MEASURE 1" THEN DRAWING IS NOT TO SCALE

MWH®

NO.	DATE	INITIAL	REVISIONS DESCRIPTION	APP'D	DATE

APPROVED BY:

DIRECTOR OF ENGINEERIN

REFEREN

File: EMWD_M04.dgn Model: Layout1 ColorTable: bw.ctb DesignScript: MWH_Iplot_PenTable_V69.pen PlotScale: 0.083333:1 User: jemorris Plot Date: 12-AUG-2011 17:38

CH2M HILL - Project Estimate for VE

Project:	PWFP - Reject Recovery Facility	**Estimate Date:**	**8/24/2011**
Project No.:		**Midpoint of Construction:**	**Oct 2012**
Location:	Perris, CA	**Location Factor:**	**As Noted**
Proposal #:	6	**Estimate Prepared By:**	**Paiz**
Descr:	Use existing back pulse tank to pulse membranes	**Estimate Reviewed By:**	**VE Team**

Spec Div	Description	Quan	Unit	Unit Cost	Loc Factor	Subtotal	Total	
	Proposed changes:							
	Add back pulse line from existing tank to new RRF							
	8" PVC	**-65**	**LF**	$60	1.00	-$3,900		Means 2011 cost data
	Allowance for fittings and valves	40%				-$1,560		
	Total						**-5,460**	
	Original design deleted:							
	Back pulse tank - 2,000 gal FRP	1	EA	$7,000	1.00	$7,000		Means 2011 cost data
	Mechanical piping and vlaves	1	LS	$2,000	1.00	$2,000		
	Reduction of concrete	15	CY	$800	1.00	$11,852		Design estimate
	Reduction of pre-engineerd building	200	SF	$85	1.00	$17,000		Design estimate
							$37,852	
	Allowance for misc items	**25%**					**9,463**	
	Total						**47,315**	
	SUBTOTAL						**$41,855**	
	Add combined markups (see notes)	**54%**					**$22,602**	
	TOTAL CONSTRUCTION COST						**$65,000**	

Notes:

1) Breakdown for combined markups include the following:

Contractor Markups:	
Overhead	**10%**
Profit	**5%**
Mobilization, Bonds & Insurance	**7%**
Estimating Contingency	**20%**
Escalation Factor	**7%**
Market Conditions Factor	**5%**
Total combined markups	**54%**

CH2MHILL

Value Engineering Proposal No. 7

Date: August 24, 2011 Project Name: Perris WFP Reject Recovery VE Study

Proposal Description

Eliminate the hydrochloric (HCl) acid storage and dosing system. Or, consider using sulfuric acid instead of hydrochloric acid.

Remarks

The VE Team proposes eliminating the HCl acid system for acid maintenance cleans (MCs) and using citric acid only. This recommendation proposes a substitution of 93 percent H2SO4 for HCl for acid MCs. No initial cost savings are estimated, based on the assumed equivalent equipment cost for H2SO4 compared to HCl. Operations and maintenance (O&M) savings (or additions) need to be calculated once MC frequency and volume of acid is determined. For this proposal writeup, differences in future savings are listed based on differences in HCl versus citric or HCl versus H2SO4 on a dollar per million gallons (mgals) of acid solution used.

Initial Savings +	Future Savings =	Present Worth Savings
$67,000* or $0** *HCl elimination **Assumes no savings in switching from HCl to H2SO4	$(31,045/mgals)* or 165/mgals** * HCl elimination **For H2SO4 substitution (see calculations); higher costs for citric acid only use not determined	$67,000 + Either (a) subtraction from higher yearly citric O&M costs or (b) addition from lower yearly H2SO4 O&M costs

Advantages	Disadvantages
HCl elimination avoids health and safety issues associated with transport, storage, and handling of a corrosive, dangerous acid	HCl elimination requires greater volumes of citric acid to achieve target pH
HCl elimination avoids the need to construct HCl facilities for the RRF, reducing equipment and building costs	Sulfuric substitution has potential to form CaSO4 precipitate in the cleaning solution
Sulfuric substitution provides consistency with mineral acid systems at Menifee, Perris I, and Perris II desalters	

Advantages	Disadvantages
HCl elimination has no risk in overshooting pH target (going below pH 2.0) from HCl acid overdose (<2.0 pH can damage membranes)	

Discussion

HCl is proposed for use to conduct MCs or in combination with citric for recovery cleans (RCs). Although HCl is less expensive to achieve the desired acid cleaning pH (3.0 or 2.0 depending on MC or RC), it requires a new bulk storage and dosing facility and introduces health and safety issues. Further, it requires careful control of dosing such that the pH target is not overshot, risking damage to the membranes. Given that no HCl is being used with the first stage membranes, where much greater volumes of citric acid are being used (and therefore considerably more potential to reduce citric costs), the use of HCl with the second stage membranes seems inconsistent. Citric acid will be effective at controlling both metal oxide fouling and CaCO3 precipitation, albeit at a higher cost. (The cost difference will depend on the frequency of MCs.)

If a mineral acid is considered absolutely essential for control of precipitation with the second stage membranes, then sulfuric acid should be considered instead of HCl. H2SO4 is equally effective at removing CaCO3 precipitation and is significantly less expensive than HCl. It is also used (or facilities are in place for use) at EMWD's desalters, so the O&M staff are familiar with its use and storage.

Sketches

See attached.

Calculations

See below for cost difference between (a) HCl and citric and (b) HCl and H2SO4.

HCl Elimination

Dose of 50 percent citric acid to get to pH 3.0 =	5,000 milligrams per liter (mg/L)
Dose of 50 percent citric acid to get to pH 3.0 =	41,700 pounds per million gallon (lbs/mgal)
Citric acid cost =	$ .75 per pound
50 percent citric acid cost =	$31,275 per mgal
Cost adder for citric acid substitution =	**$31,045 per mgal**

H2SO4 Substitution

100 percent H2SO4 dose to acidify to pH 3.0 =	200 mg/L
100 percent HCl dose to acidify to pH 3.0 =	148 mg/L
93 percent H2SO4 dose =	215 mg/L
93 percent H2SO4 dose =	1,794 lbs/mgal
33 percent HCl dose =	448 mg/L
33 percent HCl dose =	3,740 lbs/mgal
93 percent H2SO4 cost =	$66.36 per mgal
38 percent HCl cost =	$229.52 per mgal
Cost reduction for H2SO4 substitution =	**$163.16 per mgal**

Cost Estimate

See attached for facility cost savings.

Assumptions

HCl elimination: HCl is replaced with citric acid to achieve target pH of pH 3.0.

H2SO4 substitution: 93 percent sulfuric acid is used in place of 33 percent HCl.

Documentation

Attached.

Conclusion

The VE Team recommends HCl elimination if the present worth cost for citric use is equal to or less than HCl use. If not, the VE Team recommends substituting H2SO4 for HCl, which will result in savings provided no CaSO4 precipitation issue exists.

VE IDEA # 13

DELETE HCL FACILITIES

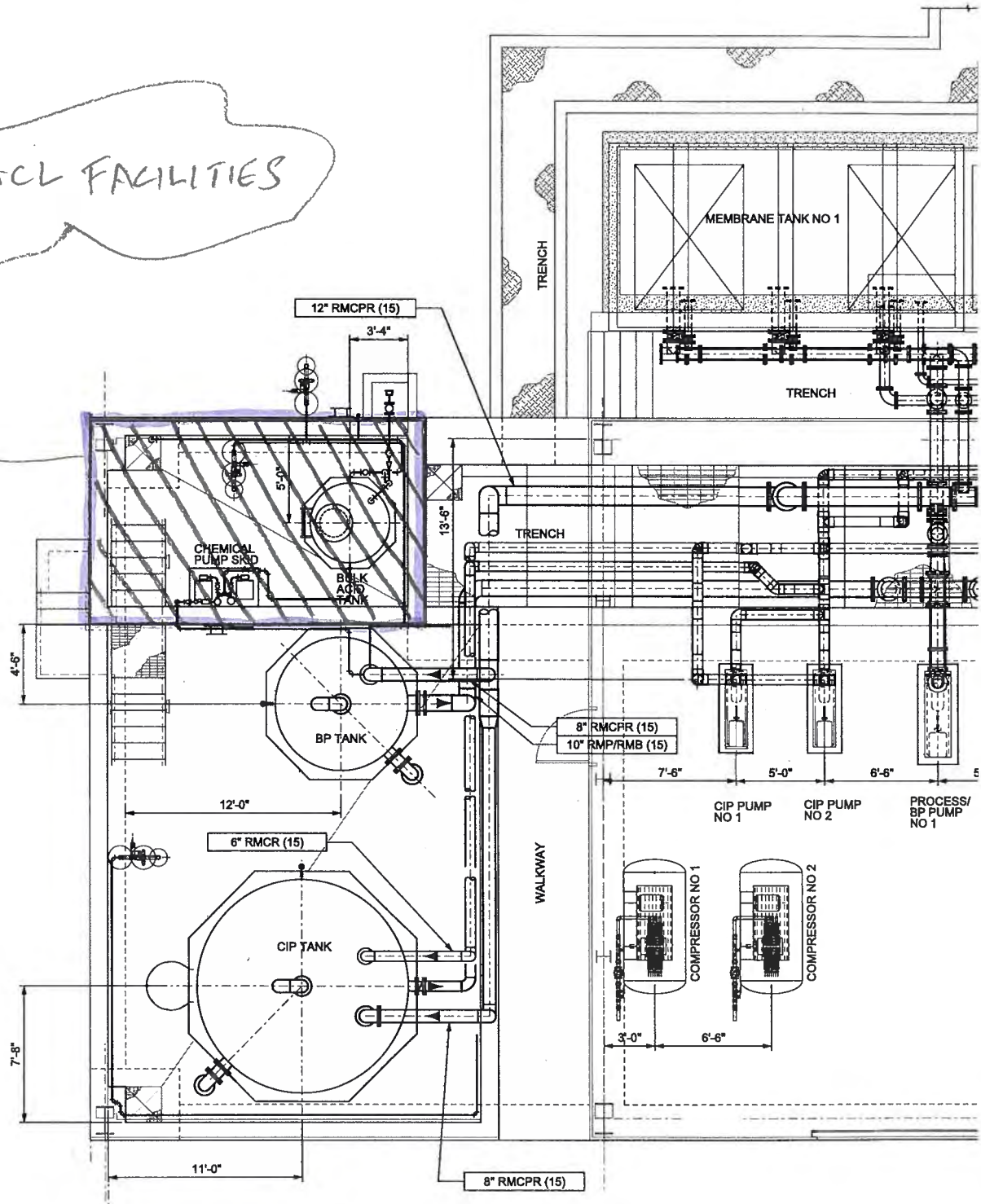

DESIGN DEVELOPMENT PHASE - 8/12/2011

NOT FOR CONSTRUCTION

This document is an interim document and not suitable for construction. As an interim document, it may contain data that is potentially inaccurate or incomplete and is not to be relied upon without the express written consent of the preparer.

WARNING
0 ½ 1
IF THIS BAR DOES NOT MEASURE 1" THEN DRAWING IS NOT TO SCALE

MWH®

REVISIONS					
NO.	DATE	INITIAL	DESCRIPTION	APP'D	DATE

APPROVED BY:

DIRECTOR OF ENGINEERING

REFERENCES

File: EMWD_M06.dgn Model: Layout1 ColorTable: bw.ctb DesignScript: MWH_Iplot_PenTable_V88.pen PlotScale: 0.083333:1 User: jemorris Plot Date: 12-AUG-2011 17:38

CH2M HILL - Project Estimate for VE

Project:	PWFP - Reject Recovery Facility	**Estimate Date:**	**8/24/2011**
Project No.:		**Midpoint of Construction:**	**Oct 2012**
Location:	Perris, CA	**Location Factor:**	**As Noted**
Proposal #:	7	**Estimate Prepared By:**	**Paiz**
Descr:	Eliminate hydrochloric acid and use citric acid	**Estimate Reviewed By:**	**VE Team**

Spec Div	Description	Quan	Unit	Unit Cost	Loc Factor	Subtotal	Total	
	Original design deleted:							
	Bulk acid tank, dual wall RFP - 600 gallons	1	EA	$9,000	1.00	$9,000		Means 2011 cost data
	Mechanical piping and vlaves	1	LS	$1,000	1.00	$1,000		
	Chemical pumps	2	EA	$2,000	1.00	$4,000		
	Reduction of concrete	11	CY	$800	1.00	$8,533		Design estimate
	Reduction of pre-engineerd building	144	SF	$85	1.00	$12,240		Design estimate
							$34,773	
	Allowance for misc items	**25%**					**8,693**	
	Total						**43,467**	
	SUBTOTAL						**$43,467**	
	Add combined markups (see notes)	**50%**					**$21,733**	
	TOTAL CONSTRUCTION COST						**$66,000**	

Notes:
1) Breakdown for combined markups include the following:

Contractor Markups:	
Overhead	**10%**
Profit	**5%**
Mobilization, Bonds & Insurance	**7%**
Estimating Contingency	**20%**
Escalation Factor	**3%**
Market Conditions Factor	**5%**
Total combined markups	**50%**

Water!Pro™

Corrosion Control and Treatment Process Analysis Program - Version 3.05

Step 1: Initial Water Characteristics

Enter initial water characteristics based on laboratory analysis.

System Name:	Example 3	Select crystalline form:		
Source Point:	Lake	Calcite		
Date of Sample:	August 11, 1999	Aragonite		
		Vaterite		
TDS =	638	mg/L	0.01595	mol/L, Ionic Strength
Calcium (Total) =	35.0	mg/L Ca^{2+}	87.41	mg/L as $CaCO_3$
Total Alkalinity =	148.0	mg/L as $CaCO_3$		
pH =	7.54	field pH is recommended		
Water Temperature =	17.6	°C (temp. at which pH was analyzed)		
Field Water Temperature =	17.6	°C (operating temperature at facility)		
Cl^- =	100.0	mg/L	141.2	mg/L as $CaCO_3$
SO_4^{2-} =	85.0	mg/L	88.6	mg/L as $CaCO_3$
Mg^{2+} =	15.0	mg/L	61.8	mg/L as $CaCO_3$

If alkalinity is unknown, then enter target DIC and click "Find Alk" button.

Target DIC	25.0	mg/L as C	208.3 mg/L as $CaCO_3$

Select water temp. for lead and copper and select copper solid(s) for calculations.

- (●) Field Temperature
- ( ) Temperature @ 25C

- [x] Cupric Hydroxide
- [ ] Malachite
- [ ] Tenorite
- [x] Cupric Phosphate

Step 2: Initial Results (Before Chemical Addition)

Theoretical initial water characteristics, corrosion indices & metals after temperature correction.

pH =	7.54		996.9	uS/cm (Electrical Conductivity)
Free Calcium =	32.4	mg/L Ca^{2+}	80.8	mg/L as $CaCO_3$
Acidity =	166.3	mg/L as $CaCO_3$	0.586	mg/L, Atmospheric equilibrium $CO_{2(aq)}$
Carbon Dioxide (CO_2) =	8.30	mg/L as $CO_{2(aq)}$	2.27	mg/L as C, dissolved inorganic carbon
DIC =	314.3	mg/L as $CaCO_3$	37.71	mg/L as C, dissolved inorganic carbon

Corrosion Indices			Recommended
Aggressive Index (AI) =	11.6	Moderately aggressive conditions for asbestos cement piping	>12
Ryznar Index (RI) =	8.15	Tendency to dissolve CaCO3 (for steel piping)	6.5-7.0
Langelier Index, Calcite =	-0.31	Tendency to dissolve CaCO3 (for steel and cast iron piping)	>0
CCPP =	-7.98	mg/L as CaCO3, Calcium Carbonate Precipitation Potential	4-10 mg/L
$B_{H20} + B_{CO3}$ =	0.421	mM/pH, Buffer intensity from water and carbonate species	
Alk/($Cl^- + SO_4^{2-}$) =	0.6	Larson's Ratio for steel and cast iron piping	> 5.0
Copper II at Field Temp. =	1.262	mg/L as copper II at dissolution; Cupric Hydroxide, light blue/blue-green	
Lead II at Field Temp. =	0.1790	mg/L as lead II at dissolution; Lead Carbonate (cerussite)	
Zinc II at 25C =	1.38	mg/L of Zinc II at dissolution; Hydrozincite - Basic Zinc Carbonate	
pH_{25} =	7.49	pH of water if measured at 25°C	

Pb & Cu Guidance — Click button for Guidance on Lead & Copper Treatment

Step 3: Chemical Addition: Enter dose for each chemical.

pH and Corrosion Control Adjustment				
$Ca(OH)_2$ (100% hydrated Lime)		mg/L	0.00	mg/L as $CaCO_3$
CaO (100% Quicklime)		mg/L	0.00	mg/L as $CaCO_3$
CaO (85% Quicklime)		mg/L	0.00	mg/L as $CaCO_3$
$CaCO_3$ (Limestone)		mg/L	0.00	mg/L as $CaCO_3$
Soda Ash (Na_2CO_3)		mg/L	0.00	mg/L as $CaCO_3$
Potash (K_2CO_3)		mg/L	0.00	mg/L as $CaCO_3$
Caustic Soda (NaOH)		mg/L	0.00	mg/L as $CaCO_3$
Potassium Hydroxide (KOH)		mg/L	0.00	mg/L as $CaCO_3$
Sodium Bicarbonate ($NaHCO_3$)		mg/L	0.00	mg/L as $CaCO_3$
Orthophosphate as PO_4^{3-}		mg/L	0.00	mg/L as P^-
Acid Addition				
Hydrochloric Acid (HCl)	0.0	mg/L	0.00	mg/L as $CaCO_3$
Sulfuric Acid (H_2SO_4)	200.0	mg/L	204.11	mg/L as $CaCO_3$
Air Stripping or Recarbonation (pH and Corrosion Adjustment)				
[1]Carbon Dioxide (CO_2) +/-		mg/L	0.00	mg/L as $CaCO_3$

[1]Enter a positive value for recarbonation or negative value for air stripping.

Coagulant Addition

Primary Coagulant	Secondary Coagulant
Aluminum Sulfate*14.3H20	No Secondary Coagulant

Aluminum Sulfate*14.3H20		mg/L	0.00	mg/L as $CaCO_3$
No Secondary Coagulant		mg/L	0.00	mg/L as $CaCO_3$
Disinfectants				
Chlorine Gas (Cl_2)		mg/L as Cl_2		
Sodium Hypochlorite (NaOCl)		mg/L as Cl_2		
Calcium Hypochlorite ($Ca(OCl)_2$)		mg/L as Cl_2		
Other				
Calcium Chloride ($CaCl_2$)		mg/L	0.00	mg/L as $CaCO_3$
Hydrofluosilicic Acid (H_2SiF_6)		mg/L	0.00	mg/L as F^-
Sodium Silicofluoride (Na_2SiF_6)		mg/L	0.00	mg/L as F^-

Copyright © 96-10 Scholl Software, all rights reserved.

Published by ChemSW(707)864-0845;ph11068;11/1/10

Step 4: Interim Results (After Chemical Addition)

Theoretical interim water characteristics, corrosion indices & metals (before $CaCO_3$ precipitation).

					Recommended
Total Alkalinity =	-56.1	mg/L as $CaCO_3$			
pH =	3.00	pH of water after chemical addition and before release of CO_2			6.8-8.0 or 8.5-9.3
Free Calcium =	29.4	mg/L Ca^{2+}	73.3	mg/L as $CaCO_3$	
Total Calcium =	35.0	mg/L Ca^{2+}	87.4	mg/L as $CaCO_3$	
Acidity =	370.4	mg/L as $CaCO_3$			
Carbon Dioxide (CO_2) =	138.13	mg/L as $CO_{2(aq)}$	37.70	mg/L as C	
DIC =	314.3	mg/L as $CaCO_3$	37.71	mg/L C, dissolved inorganic carbon	

Corrosion Indices			Recommended
Aggressive Index (AI) =	N/A	N/A	>12
Ryznar Index (RI) =	19.42	Tendency to dissolve CaCO3 (for steel piping)	6.5-7.0
Langelier Index, Calcite =	-8.21	Tendency to dissolve CaCO3 (for steel and cast iron piping)	>0
CCPP =	-303.54	mg/L as $CaCO_3$, Calcium Carbonate Precipitation Potential	4-10 mg/L
$B_{H20} + B_{CO3} + B_{PO4}$ =	2.588	mM/pH, Buffer intensity from water, carbonate, and PO_4 species	
Alk/($Cl^- + SO_4^{2-}$) =	-0.2	Larson's Ratio for steel and cast iron piping	> 5.0
Copper II at Field Temp. =	N/A	Value not available	
Lead II at Field Temp. =	########	mg/L as lead II at dissolution; Lead Carbonate (cerussite)	
Zinc II at 25C =	########	mg/L of Zinc II at dissolution; Zinc Carbonate	
pH_{25} =	4.09	pH of water if measured at 25°C	

Step 5: Final Results (At Equilibrium): Theoretical finished water characteristics & metals if $CaCO_3$ precipitation has occurred. (i.e., LI and CCPP=0 and AI =12)

Final Alkalinity =	N/A	mg/L as $CaCO_3$			
Final pH =	N/A	at water temp =	N/A	°C	
Final Calcium (total) =	N/A	mg/L as Ca^{2+}	N/A	mg/L as $CaCO_3$	
Final Acidity =	N/A	mg/L as $CaCO_3$			
Carbon Dioxide (CO_2) =	N/A	mg/L as $CO_{2(aq)}$	N/A	mg/L as C	
Final DIC =	N/A	mg/L as $CaCO_3$	N/A	mg/L as C, dissolved inorganic carbon	
Copper II =	N/A	N/A			
Lead II =	N/A	N/A			
Zinc II at 25C =	N/A	N/A			
pH_{25} =	N/A	pH of water if measured at 25°C			

93 Percent Sulfuric Acid Bulk Costs

Barbara Ortner on the off-beat side of life in the chemical industry
Chemicals Confidential

+Soybean salad oil	Asia, rubber grade, f.o.b./c.f.r.	lb	0.3986
Spearmint oil	rubber grade, bulk	kg	25.00
Spearmint oil	triple-pressed, bulk	kg	25.00-26.00
Spearmint oil	US Gulf, contract f.o.b.	kg	32.00
Spearmint oil	US Gulf, spot f.o.b. export	kg	28.00
+Stearic acid	nat. bulk, f.o.b. plant	lb	0.390-0.413
+Stearic acid	cryst. bulk, f.o.b. plant	lb	0.29-0.30
+Stearic acid	clear bulk, f.o.b. plant	lb	0.40-0.44
*Styrene monomer	Non-oil grade contract f.o.b. USG	lb	0.65-0.80
*Styrene monomer	Non-oil grade spot f.o.b. USG	lb	0.59-0.72
Styrene-acrylonitrile resin	Oil extended grade contract f.o.b. USG	lb	0.85-0.90
Styrene-acrylonitrile resin	Oil extended grade spot f.o.b. USG	lb	0.85-0.90
Styrene-acrylonitrile resin	bgs., c.l., t.l., f.o.b. works	lb	0.85-0.90
Styrene-Butadiene Rubber	Frasch & recovered, contract del Tampa	lb	0.77
Styrene-Butadiene Rubber	Frasch & recovered, contract f.o.b. Vancouver	lb	0.77-0.78
Styrene-Butadiene Rubber	liq. bulk, t.c., t.t., f.o.b. works	lb	0.68
Styrene-Butadiene Rubber	anhyd. (99.9%) 2000 lbs., f.o.b.	lb	0.66-0.67
Sulfamic acid	virgin 100%, tanks, works, East Coast	lb	0.42-0.44
*Sulfur	virgin 100%, tanks, works, Southwest	tonne	246.54-443.39
*Sulfur	virgin 100%, tanks, works, Midwest	tonne	307.50-510.00
Sulfur dioxide	virgin 100%, tanks, works, Southeast	ton	230.00
Sulfur dioxide	virgin 100%, tanks, works, West Coast	cyl	1450.00
Sulfuric acid	smelter 100% tanks, works, Gulf Coast	ton	57.00-85.00
Sulfuric acid	smelter 100%, tanks, works	ton	87.00
Sulfuric acid	smelter, tanks, intro. Southeast	ton	94.00
Sulfuric acid	smelter, 93% tanks, dlvd., Northwest	ton	73.10
Sulfuric acid	28% protein, dlvd., Minn./N.D.	ton	94.00
Sulfuric acid	crude, Midwest, f.o.b.	ton	50.00-62.00
Sulfuric acid		ton	25.00-30.00
Sulfuric acid		ton	67.00
Sulfuric acid		ton	50.00-55.00
+Sunflowerseed meal		ton	85.00
+Sunflowerseed oil		lb	0.65

Top of page

For formal price assessments and analysis on more than 120 commodity chemicals updated on a daily and weekly basis, go to our premium subscription service ICIS pricing at ***www.icispricing.com****.*

Sign up | Sitemap | Terms and Conditions | Disclaimer | Privacy Policy | About us | Advertise

© 2011 Reed Business Information Limited. All Rights Reserved.

33 Percent Hydrochloric Acid Bulk Costs

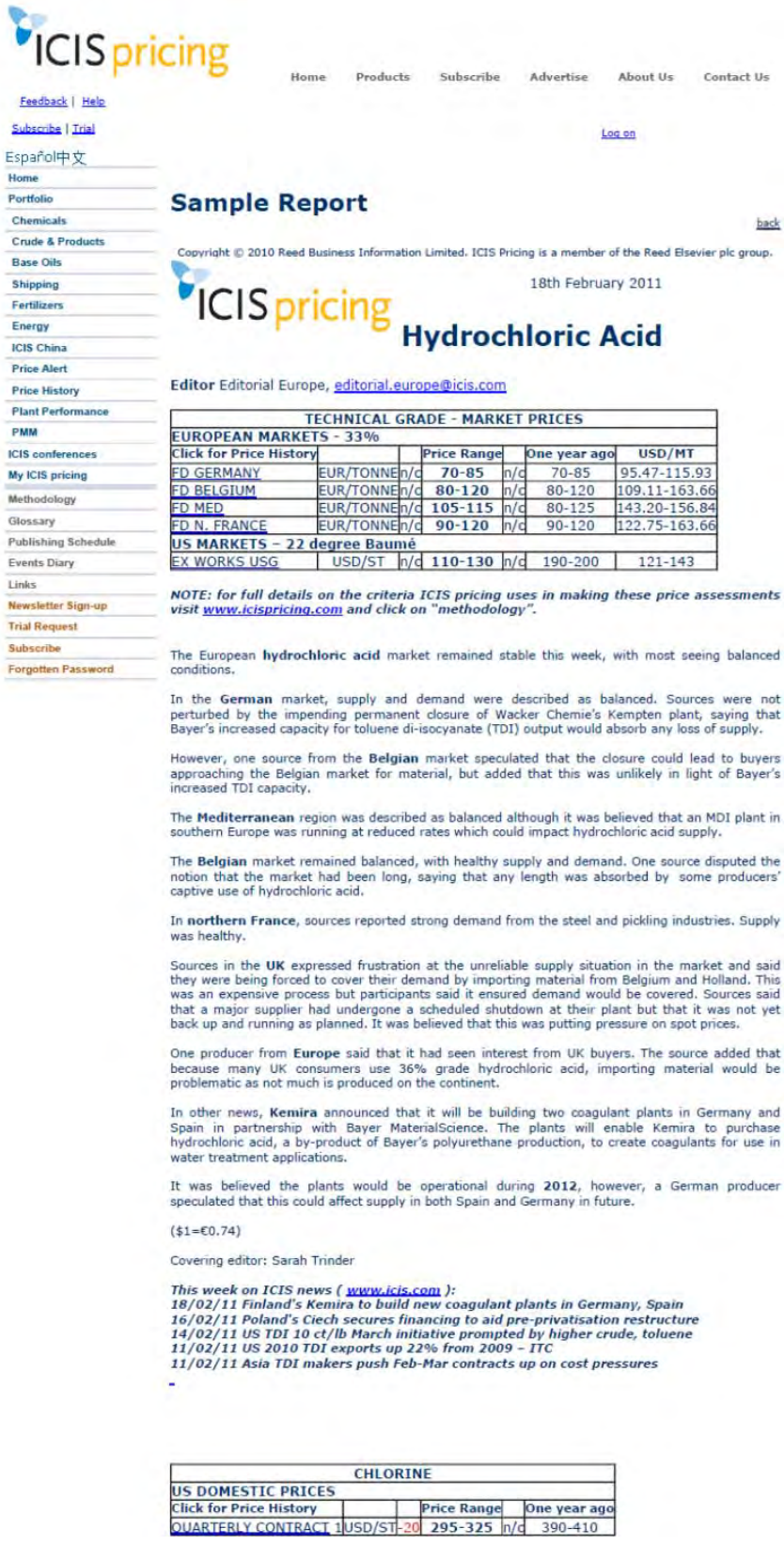

ICIS pricing

Home Products Subscribe Advertise About Us Contact Us

Feedback | Help

Subscribe | Trial

Log on

Español中文

- Home
- Portfolio
- Chemicals
- Crude & Products
- Base Oils
- Shipping
- Fertilizers
- Energy
- ICIS China
- Price Alert
- Price History
- Plant Performance
- PMM
- ICIS conferences
- My ICIS pricing
- Methodology
- Glossary
- Publishing Schedule
- Events Diary
- Links
- Newsletter Sign-up
- Trial Request
- Subscribe
- Forgotten Password

Sample Report

back

Copyright © 2010 Reed Business Information Limited. ICIS Pricing is a member of the Reed Elsevier plc group.

ICIS pricing

18th February 2011

Hydrochloric Acid

Editor Editorial Europe, editorial.europe@icis.com

TECHNICAL GRADE - MARKET PRICES						
EUROPEAN MARKETS - 33%						
Click for Price History			**Price Range**		**One year ago**	**USD/MT**
FD GERMANY	EUR/TONNE	n/c	**70-85**	n/c	70-85	95.47-115.93
FD BELGIUM	EUR/TONNE	n/c	**80-120**	n/c	80-120	109.11-163.66
FD MED	EUR/TONNE	n/c	**105-115**	n/c	80-125	143.20-156.84
FD N. FRANCE	EUR/TONNE	n/c	**90-120**	n/c	90-120	122.75-163.66
US MARKETS – 22 degree Baumé						
EX WORKS USG	USD/ST	n/c	**110-130**	n/c	190-200	121-143

NOTE: for full details on the criteria ICIS pricing uses in making these price assessments visit www.icispricing.com and click on "methodology".

The European **hydrochloric acid** market remained stable this week, with most seeing balanced conditions.

In the **German** market, supply and demand were described as balanced. Sources were not perturbed by the impending permanent closure of Wacker Chemie's Kempten plant, saying that Bayer's increased capacity for toluene di-isocyanate (TDI) output would absorb any loss of supply.

However, one source from the **Belgian** market speculated that the closure could lead to buyers approaching the Belgian market for material, but added that this was unlikely in light of Bayer's increased TDI capacity.

The **Mediterranean** region was described as balanced although it was believed that an MDI plant in southern Europe was running at reduced rates which could impact hydrochloric acid supply.

The **Belgian** market remained balanced, with healthy supply and demand. One source disputed the notion that the market had been long, saying that any length was absorbed by some producers' captive use of hydrochloric acid.

In **northern France**, sources reported strong demand from the steel and pickling industries. Supply was healthy.

Sources in the **UK** expressed frustration at the unreliable supply situation in the market and said they were being forced to cover their demand by importing material from Belgium and Holland. This was an expensive process but participants said it ensured demand would be covered. Sources said that a major supplier had undergone a scheduled shutdown at their plant but that it was not yet back up and running as planned. It was believed that this was putting pressure on spot prices.

One producer from **Europe** said that it had seen interest from UK buyers. The source added that because many UK consumers use 36% grade hydrochloric acid, importing material would be problematic as not much is produced on the continent.

In other news, **Kemira** announced that it will be building two coagulant plants in Germany and Spain in partnership with Bayer MaterialScience. The plants will enable Kemira to purchase hydrochloric acid, a by-product of Bayer's polyurethane production, to create coagulants for use in water treatment applications.

It was believed the plants would be operational during **2012**, however, a German producer speculated that this could affect supply in both Spain and Germany in future.

($1=€0.74)

Covering editor: Sarah Trinder

This week on ICIS news (www.icis.com):
18/02/11 Finland's Kemira to build new coagulant plants in Germany, Spain
16/02/11 Poland's Ciech secures financing to aid pre-privatisation restructure
14/02/11 US TDI 10 ct/lb March initiative prompted by higher crude, toluene
11/02/11 US 2010 TDI exports up 22% from 2009 – ITC
11/02/11 Asia TDI makers push Feb-Mar contracts up on cost pressures

CHLORINE					
US DOMESTIC PRICES					
Click for Price History			**Price Range**		**One year ago**
QUARTERLY CONTRACT 1	USD/ST	-20	**295-325**	n/c	390-410

Brainerd L.L.C. of North Carolina, a supplier of Nitric Acid, Formaldehyde, Citric Acid, Sulfuric A.

brainerd
L.L.C. of North Carolina

Our Company Product Catalog Search for MSDS Nitric Acid Contact Us

Customer Login

Become a New Customer

User ID

Password

Submit

Recover Lost Password

Featured Products

- Citric Acid
- Nitric Acid
- Sulfuric Acid
- Formaldehyde
- Ferric Chloride
- Isopropyl Alcohol
- Hydrofluoric Acid
- Hydrochloric Acid (HCl)
- Sodium Hypochlorite (Bleach)
- Sodium Hydroxide (Caustic Soda)

Product Catalog

Back to Search | Shopping Cart | Check Out

62 records found Page 1 | 2 | 3 |

Description	Size	Price	
CITRIC ACID	1000 KG (2205 LBS)	$2,847.61	Add
	2000 POUND	$2,933.00	Add
	50 POUND	$119.25	Add
	50 POUND PAIL	$140.70	Add
	55 POUND	$131.47	Add
	8 POUND	$57.85	Add
CITRIC ACID, 20% SOLUTION	5 GALLON	$52.03	Add
CITRIC ACID, 25% SOLUTION	275 GALLON	Contact Us for the Price	
	330 GALLON	Contact Us for the Price	
	55 GALLON	Contact Us for the Price	
	BULK POUNDS	$40.00	Add
CITRIC ACID, 50% NSF SOLUTION	330 Gal Tote	$2,808.49	Add
	55 GALLON	$588.91	Add
	BULK POUNDS	$0.75	Add
CITRIC ACID, 50% SOLUTION	1 GALLON	$31.47	Add
	330 GALLON	$2,058.67	Add
	5 GALLON	$105.45	Add

CH2MHILL

Value Engineering Proposal No. 8

Date: August 24, 2011 Project Name: Perris WFP Reject Recovery VE Study

Proposal Description

Reduce conservatism in the membrane design by eliminating space for a third cassette in each second stage train.

Initial Savings +	Future Savings =	Present Worth Savings
$13,000	$0	$13,000

Advantages	Disadvantages
Reduced footprint and cost of membrane tank	Increase RRF clean-in-place (CIP) costs during summer (peak months)
Reduced volume of maintenance clean (MC) and recovery clean (RC) chemicals needed (one-third less)	
Reduced volume of neutralization chemicals needed to neutralize spent MC and RC solutions (one-third less)	
Reduced volume and cost of neutralized cleaning chemicals discharged to sewer	
Reduced time to batch and transfer cleaning solutions and neutralized solutions	

Discussion

The current design is based on two 500D cassettes with sixty 340-square-foot modules installed. Four additional modules can be installed if needed to further reduce flux, and space has been provided for installation of a third cassette in the tank if necessary. The following table lists the instantaneous flux under each condition.

Configuration	2 cassettes/60 modules	2 cassettes/64 modules	3 cassettes/64 modules
Instantaneous Flux (gfd)	14.25	13.35	8.9

The flux for the current design condition (two cassettes/60 modules) reflects what GE believes is an appropriate flux in the absence of pilot data. However, a reasonable recommendation for selecting a design flux can be arrived at by examining the flux of the last (trailing) subgroup in Tank B of the first stage. Although currently operated in semi-batch mode, when the plant was operated in feed and bleed mode, feedwater to this subgroup would have been similar in solids and total organic compounds (TOC) concentrate to that projected for the stage 2 membrane system based on concentration of solids through the two-tank, series arrangement. As such, the operating flux and associated performance of the trailing subgroup would provide a reasonable basis for estimating the design flux of the stage 2 membranes. Based on email communications with EMWD operations staff Phil Lancaster, the flux of the trailing subgroup is 17 gallons per square foot per day (gfd) when the first stage is operating at 18 million gallons per day (mgd). At 24 mgd, the flux of this subgroup would be proportionally greater (i.e., greater than 20 gfd). At 17 gfd, flux is 20 percent greater than the current design flux of the stage; at 20 gfd, flux is 40 percent greater.

Based on the annual water production schedule, the first stage membrane system will only operate at 24 mgd (producing a maximum of 1 mgd to second stage) for 3 months of the year. During the remainder, flow to the second stage will be significantly reduced, meaning the average annual flux for the RRF most likely will be 10 gfd.

Considering the trailing subgroup flux of the first stage and estimated average flux of the second stage, the amount of membrane area provided via two cassettes is more than sufficiently conservative to meet design production requirements without the need for a third cassette.

Therefore, the VE Team's recommendation is to delete the space for the third cassette and reduce the size of the membrane tank accordingly.

Sketches

See attached.

Calculations

See next page.

Cost Estimate

N/A.

Assumptions

The estimated cost savings only address deferred concrete costs. No savings were incorporated for installed (embedded) cassette or piping hangars, a shorter catwalk, stairs, or deferred tank covers.

Documentation

None.

Conclusion

The VE Team recommends this proposal.

Calculations

Reduce tank size by removing third cassette					
Given:	tank length = 46.33 feet				
	using '10' scale, 46.33 feet = 52				
	ratio factor =	0.89			
	concrete cost =	$ 600	cubic yard		
	scale width of cassette =	7			
	actual width of cassette =	6.2	feet (ft)		
	removed length of tank =	13.7	ft	2 cassette widths with 10 percent clearance factor	
	tank wall thickness =	1	ft		
	tank wall height =	8.5	ft		
	tank floor thickness =	1.33	ft		
	tank floor width =	8.17	ft		
	removed concrete in walls =	233	ft		
	removed concrete in floor =	149	ft3		
	removed concrete in roof =	5	ft3	insignificant (mostly tank covers)	
	total deferred concrete =	387	ft3		
	total deferred concrete =	14.3	cubic yard		
	deferred concrete cost =	$ 8,606			
	project deferred cost =	$13,254			

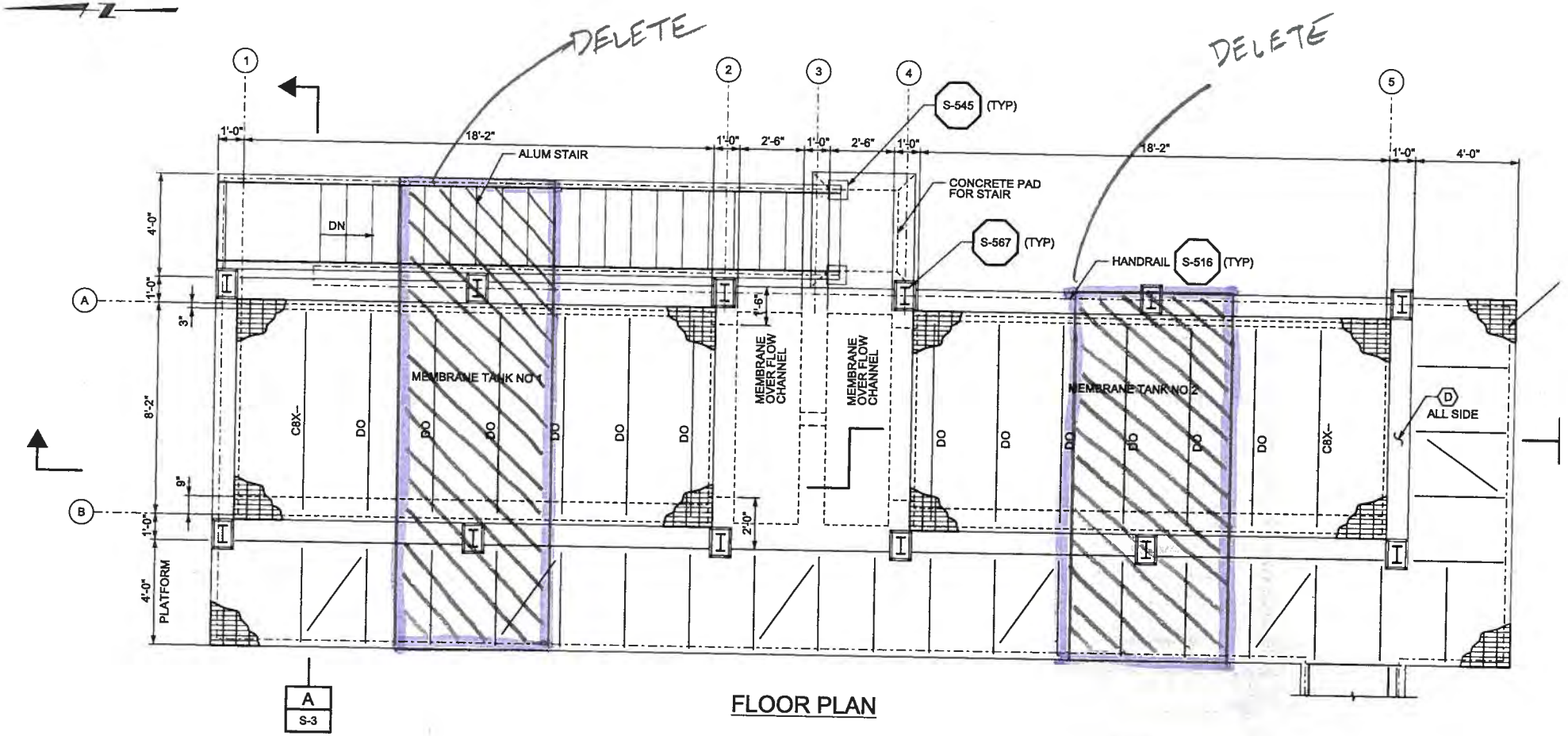

FLOOR PLAN

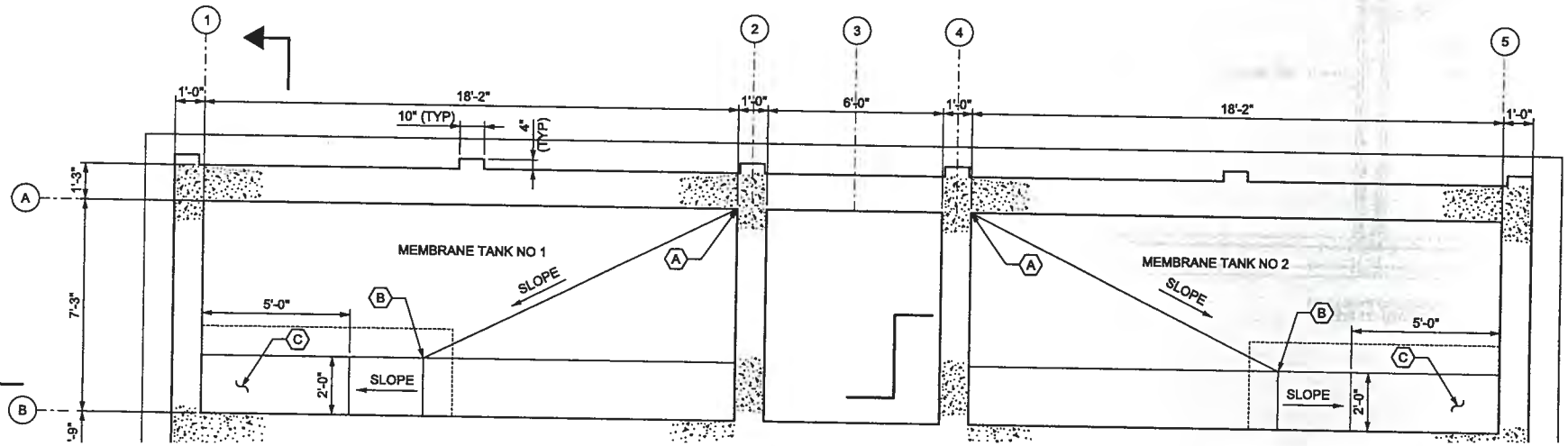

Plot Date: 12-AUG-2011 14:52
User: thma
WH_Iplot_PenTable_V89.pen PlotScale: 0.083333:1

CH2MHILL

Value Engineering Proposal No. 9

Date: August 24, 2011 Project Name: Perris WFP Reject Recovery VE Study

Proposal Description

Incorporate GE's Low Energy Aeration Process (LEAP™) into the membrane system aeration design.

Initial Savings +	Future Savings =	Present Worth Savings
$107,000	$73,273	$180,000

Advantages	Disadvantages
Eliminates butterfly valving used to cycle air between membrane tanks and maintenance associated with valves and actuators; cycling is high frequency (every 10 seconds), resulting in high stress and wear on valve components	None identified
LEAP requires smaller blower and horsepower drive because air pressure is lower than with traditional coarse bubble aeration	

Discussion

The proposed membrane system design uses high-frequency, fast-acting butterfly valves to cycle air-scour air approximately every 10 seconds between membrane trains. The air is distributed through coarse bubble diffusers located at the bottom of the cassettes. GE has recently introduced LEAP for ZW500D membrane bioreactor systems. This process can be applied to the RRF. LEAP eliminates the use of the fast-acting valves, which are expensive and require frequent maintenance because of the high number of cycles. Additionally, LEAP reduces the pressure needed for aeration by eliminating the diffusers. The reduced pressure reduces the horsepower needed to operate the blowers.

Sketches

See attached markup to the Process and Instrumentation diagram for valve elimination.

Calculations

N/A.

Cost Estimate

See attached estimate for both capital cost and present-worth energy costs.

Assumptions

No savings in blower cost (at lower output air pressure). Should be confirmed; additional capital cost.

Documentation

None.

Conclusion

The VE Team recommends implementing LEAP, provided GE endorses the concept.

VE IDEA #34

NOTES:

1. ALL DOTTED LINES/EQUIPMENT BY OTHERS. - - - - - - - -
2. DRAWING TYPICAL FOR ALL TRAINS.
3. AN OVERFLOW IS REQUIRED FOR EACH TRAIN.
4. A PORTION OF THE AIR HEADER NEEDS TO BE LOCATED ABOVE THE HIGHEST WATER LEVEL IN THE MEMBRANE TANK.
5. 5 PIPE DIAMETERS UPSTREAM, 3 PIPE DIAMETERS DOWNSTREAM, STRAIGHT PIPE RUN RECOMMENDED FOR MAXIMUM ACCURACY.
6. PIPE VENT TO MEMBRANE TANK OR OTHER SAFE LOCATION.
7. VENT VALVES MAY BE REQUIRED BASED ON PLANT LAYOUT AND HYDRAULIC REQUIREMENTS.

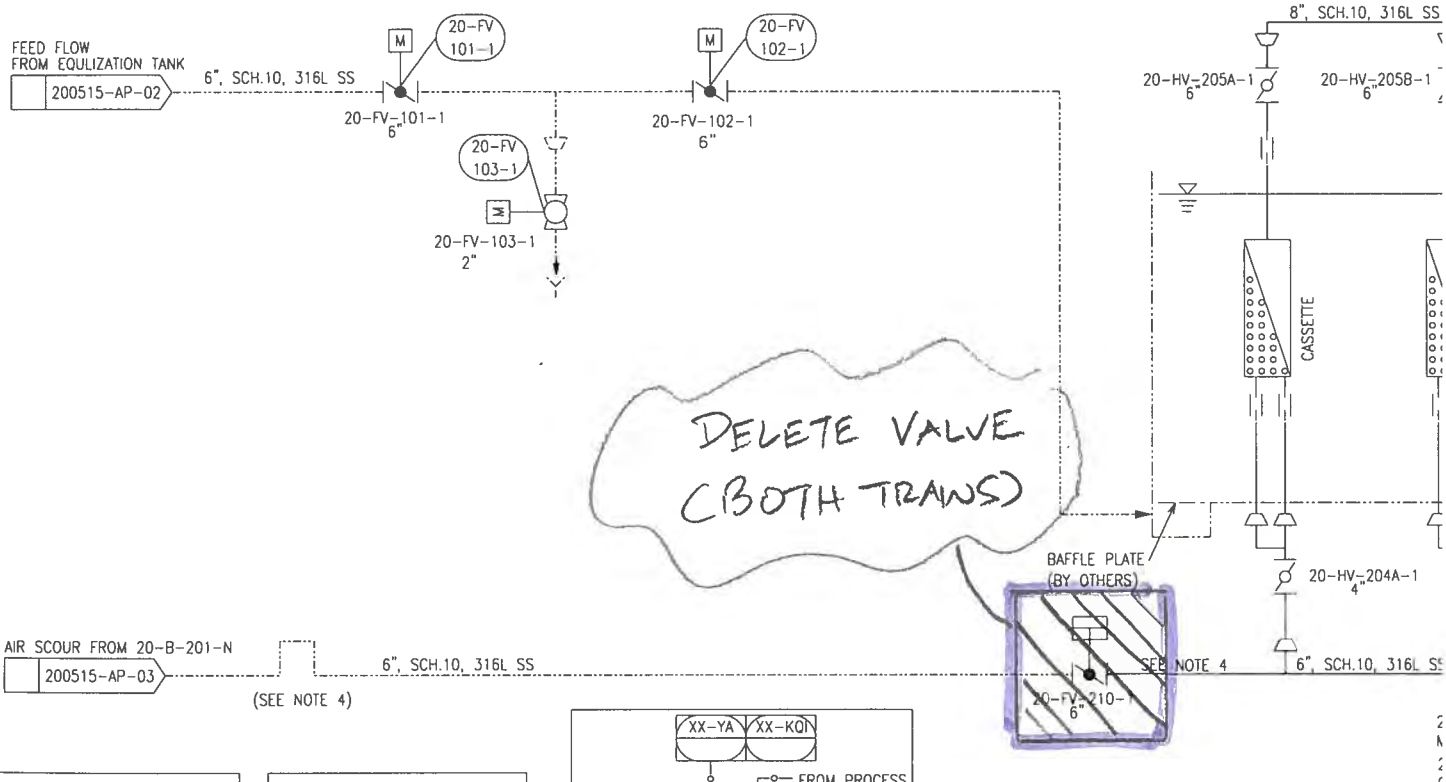

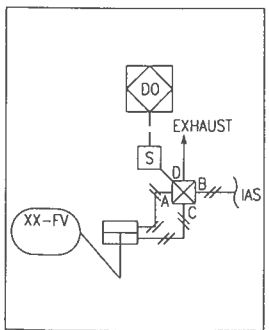

TYP. PNEUMATIC ACTUATED VALVE CONTROL DETAIL (CYCLIC VALVES)

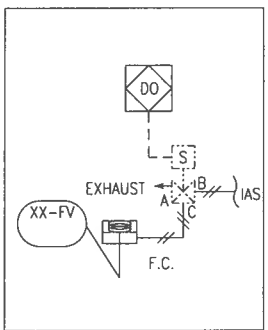

TYP. SPRING CLOSE VALVE CONTROL DETAIL

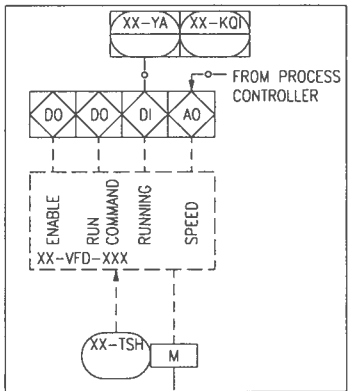

TYP. PUMP CONTROL DETAIL

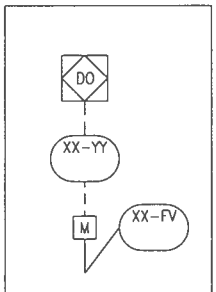

ELECTRIC ACTUATOR OPEN/CLOSE ONE OUTPUT

REV	DESCRIPTION	ECO	DWN	APVD	DATE	CHKD
0	ISSUED FOR APPROVAL		HR		04MAY11	R.P

TOLERANCES UNLESS NOTED
DECIMALS: X ±, XX ±, XXX ±
ANGLES ±, FRAC ±
DIMENSIONS IN INCHES
DO NOT SCALE
THIRD ANGLE

DRAWN BY	AK	DATE	28APR11
CHECKED BY	R.P	DATE	28APR11
APPROVED BY		DATE	
APPROVED BY		DATE	

GE Water & Pr
GLOBAL HEADQUARTERS

THIS DRAWING, THE DESIGN AND THE PATENTS AND THE INFORMATION CONTAINED HEREIN IS PRC WRITTEN CONSENT OF SAID COMPANY. THIS DRA GENERAL ELECTRIC COMPANY AND ITS AFFILIAT PURPOSE. NEITHER THIS DRAWING, NOR ANY PO SAID COMPANY, AN

CH2M HILL - Project Estimate for VE

Project:	PWFP - Reject Recovery Facility	**Estimate Date:**	**8/24/2011**
Project No.:		**Midpoint of Construction:**	**Oct 2012**
Location:	Perris, CA	**Location Factor:**	**As Noted**
Proposal #:	9	**Estimate Prepared By:**	**Paiz**
Descr:	Incorporate GE's Low Energy Aeration Process (LEAP) into the membrane system aeration design	**Estimate Reviewed By:**	**VE Team**

Spec Div	Description	Quan	Unit	Unit Cost	Loc Factor	Subtotal	Total	
	Delete original design:							
	SST 6" butterfly valves with actuators	2	EA	$35,000	1.00	$70,000		Estimator's judgement
	Change motors:							
	Add cost for changing motor size for Blower from 50 and 40 HP	-2	EA	$75	1.00	-$150		Means 2011 cost data
	Allowance for reduced misc electrical components	2	EA	$500	1.00	$1,000		
	Subtotal						**70,850**	
	SUBTOTAL						**$70,850**	
	Add combined markups (see notes)	**50%**					**$35,425**	
	TOTAL CONSTRUCTION COST						**$107,000**	

Notes:
1) Breakdown for combined markups include the following:

Contractor Markups:	
Overhead	**10%**
Profit	**5%**
Mobilization, Bonds & Insurance	**7%**
Estimating Contingency	**20%**
Escalation Factor	**3%**
Market Conditions Factor	**5%**
Total combined markups	**50%**

CH2MHILL

Value Engineering Proposal No. 10

Date: August 24, 2011 Project Name: Perris WFP Reject Recovery VE Study

Proposal Description

Eliminate the hot backup redundant programmable logic controller (PLC) within GE Package Control System Main Control Panel CP-01. Remove and replace the redundant ControlNet cabling and hardware for Flex IO modules inside Main Control Panel CP-01 and Control Panel CP-11 and CP-12.

Remarks

GE Package Control System drawing 20015-IE-01 identifies the installation of hot backup redundant Control Logix PLC platforms incorporating the following duplicate hardware:

- 1756-PA72 Power Supply
- 1756- L65 Processor
- 1756- ENBT Ethernet Communication Module
- 1756- CNBR Control Net Communication Module
- 1756- CNBR Control Net Communication Module
- 1756- A7 Chassis
- 1794-ACNR Redundant Flex IO Modules
- ControlNet cabling

Note 1: The proposed redundant Control Logix PLCs seem to be missing a 1756-RM redundancy module to implement redundancy communication between PLCs or an equal approach.

Note 2: The redundant Flex Logix IO communication modules would no longer be required, nor would redundant cabling.

Initial Savings +	Future Savings =	Present Worth Savings
$34,000	$0	$34,000

Advantages	Disadvantages
Minimizes application software (i.e., HMI and PLC programming) and additional support documentation	No implementation of hot backup redundancy
Minimizes hardware and assembly	

Advantages	Disadvantages
Minimizes ControlNet cabling requirements, simplifying installation	
Minimizes loading on proposed 700 VA UPS	
Minimizes control panel interior space requirements	

Discussion

The RRF is not performing critical process control, requiring continuous operation. Down time is tolerated because reject flows from the existing water treatment facility may be diverted to sewer.

The package system supplier would be requested to supply one spare of each type of PLC hardware to support quick replacement. In the event of a PLC hardware failure (processor, communication module, input-output module, power supply), a spare device could be removed quickly and replaced with minimum outage.

Note: Spare hardware normally would be provided regardless if the PLC system was redundant or not.

Sketches

See attached.

Calculations

N/A.

Cost Estimate

See attached cost estimate spreadsheet and also the quote from Border States for a magnitude hardware cost for PLC hardware.

Assumptions

The package system supplier would be requested to supply one spare of each type of PLC hardware to support quick replacement.

Documentation

GE Package Control System Network Architecture Drawing 200515-IE-01.

Conclusion

The RRF is not a critical process system and does not require PLC redundancy. Down time can be tolerated and minimized by having spare hardware on hand.

COMMUNICATION	CABLE TYPE	RECOMMENDED MANUFACTURER PART #	LEGEND	
			BY GE W & PT	BY CONTRACTOR
NETWORK DROP	RG-6 QUAD SHELD COAX	BELDEN 3092A	———	
NETWORK TRUNK	RG-11 COAXIAL CABLE	BY CONTRACTOR		— — —
ETHERNET	CATEGORY 5 UNSHIELDED TWISTED-PAIR	BELDEN 1583A	—— · ——	— — —
ANALOG	PHONE	BY CONTRACTOR		— — —

NETWORK: ETHERNET			NETWORK: REMOTE I/O		
BAUD RATE: 10 Mbps			BAUD RATE:		
REF.	IP ADDRESS	DESCRIPTION	REF.	NODE	DESCRIPTION
20	SEE NOTE 4	N-TRON 708FX2-ST ETHERNET SWITCH	1	1	1794-ACNR, RACK 1
21	SEE NOTE 4	N-TRON 708FX2-ST ETHERNET SWITCH	2	2	1794-ACNR, RACK 2
22	SEE NOTE 4	1756-EN2T, RACK A	3	3	1794-ACNR, RACK 3
23	SEE NOTE 4	1756-EN2T, RACK B	4	4	1794-ACNR, RACK 4
24	SEE NOTE 4	DELL COMPUTER STANDALONE SCADA SERVER			
			8	8	1756-CN2R/B, RACK A, CP-01
			9	9	1756-CN2R/B, RACK B, CP-01

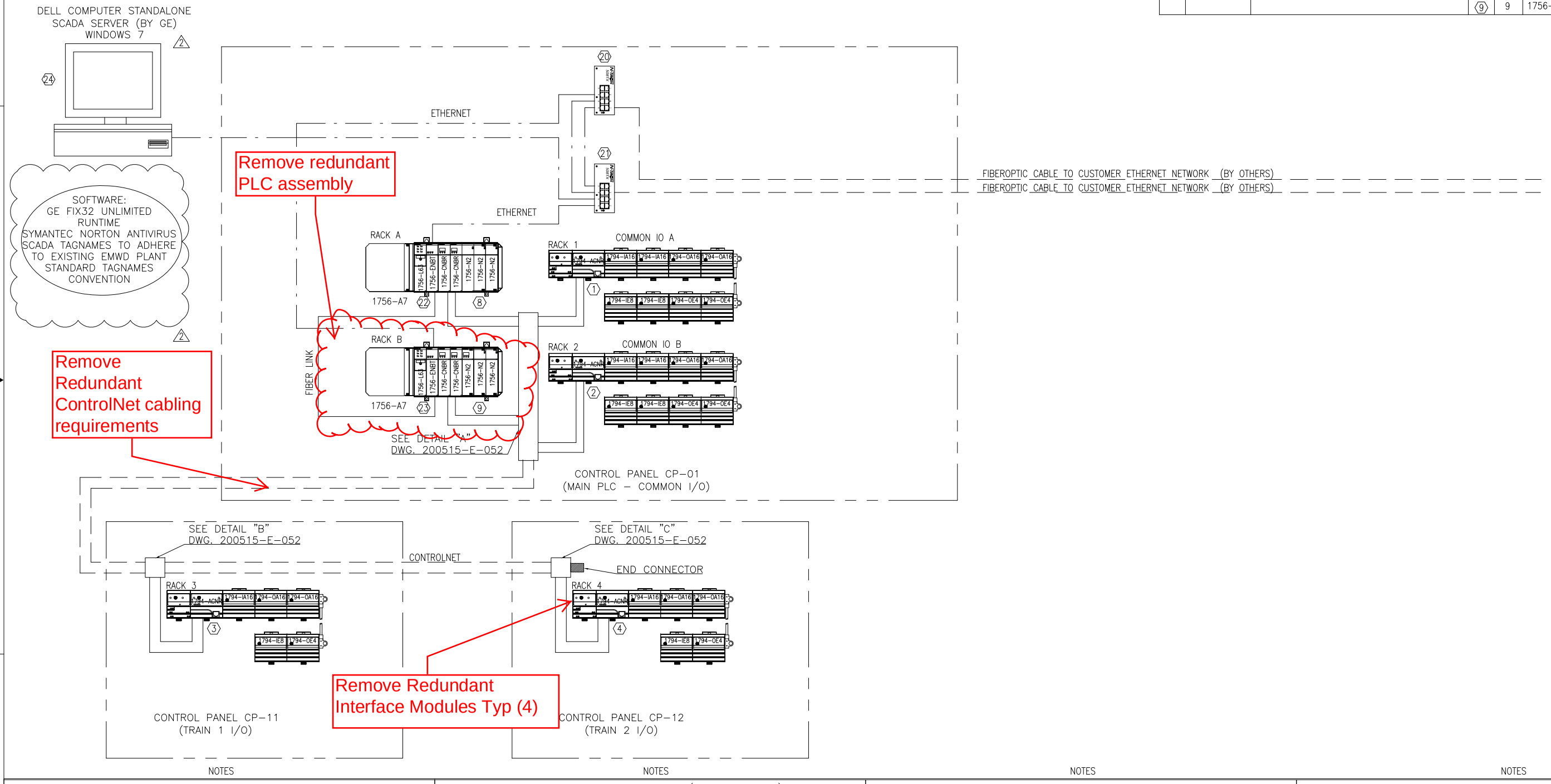

NOTES

1. COMMUNICATION MODULES ON HOT-BACKUP CHASSIS MUST BE SET TO THE SAME NODE OR IP ADDRESS
2. USE RG-6 COAXIAL CABLES FOR RIO RACK DROPS, C/W MA 0329 001 CONNECTORS.

NOTES

3. HIGH SPEED INTERNET CONNECTION FOR (REMOTE ACCESS) TO BE SUPPLIED BY OTHERS.
4. ETHERNET IP ADDRESS TO BE ASSIGNED BY CLIENT. SET RIO MODULE SWITCHES AS PER NODES INDICATED.

NOTES

5. DASHED LINES DENOTE WIRING/EQUIPMENT BY OTHERS/GENERAL CONTRACTOR.
6. NETWORK COMMUNICATION CABLES SHOULD BE INSTALLED IN SEPARATE CONDUIT FROM POWER, CONTROL AND INSTRUMENTATION CIRCUITS

NOTES

REV	DESCRIPTION	ECO	DWN	APVD	DATE	CHKD
2	REVISED AS NOTED				08Aug11	
1	REVISED AS NOTED		KR	JL	15Jun11	PU
0	ISSUED AS CONTROLLED DOCUMENT		KR	JL	04May11	PU

TOLERANCES UNLESS NOTED
DECIMALS: .X ± .TENS; .XX ± .HUND; .XXX ± .THOUS
ANGLES: ±DE; FRAC; ±FRAC
DIMENSIONS IN INCHES
DO NOT SCALE
THIRD ANGLE

DRAWN BY	KR	DATE 04May11
CHECKED BY	PU	DATE 04May11
APPROVED BY	GP	DATE 04May11
APPROVED BY		DATE

GE
Water & Process Technologies
GLOBAL HEADQUARTERS : TREVOSE, PA USA +1-215-355-3300 WWW.GEWATER.COM
THIS DRAWING, THE DESIGN AND THE PATENTS IT COVERS, IS THE PROPERTY OF GENERAL ELECTRIC COMPANY AND ITS AFFILIATES AND THE INFORMATION CONTAINED HEREIN IS PROPRIETARY INFORMATION WHICH IS NOT TO BE DISCLOSED TO ANYONE WITHOUT PRIOR WRITTEN CONSENT OF SAID COMPANY. THIS DRAWING IS TO BE USED EXCLUSIVELY FOR THE PURPOSES EXPRESSLY AUTHORIZED BY GENERAL ELECTRIC COMPANY AND ITS AFFILIATES THROUGH ITS OFFICERS AND QUALIFIED REPRESENTATIVES AND FOR NO OTHER PURPOSE. NEITHER THIS DRAWING, NOR ANY PORTION THEREOF, SHALL BE REPRODUCED WITHOUT THE PRIOR WRITTEN CONSENT OF SAID COMPANY, AND ANY SUCH REPRODUCTION SHALL BEAR THIS NOTICE.

CLIENT/JOB	EMWD PWFP REJECT RECOVERY FACILITY
FILE	
DWG DESCRIPTION	CONTROL SYSTEM NETWORK ARCHITECTURE
MATERIAL/BOM NO.	
SIZE	D
DRAWING NO.	200515-IE-01
REV	2
PROJECT	200515
SCALE	NTS
SHEET	01 OF 2

P/N 1161662-RGP01

CH2M HILL - Project Estimate for VE

Project:	PWFP - Reject Recovery Facility	**Estimate Date:**	**8/25/2011**
Project No.:		**Midpoint of Construction:**	**Oct 2012**
Location:	Perris, CA	**Location Factor:**	**As Noted**
Proposal #:	10	**Estimate Prepared By:**	**REL**
Descr:	Eliminate the redundant programmable logic controller	**Estimate Reviewed By:**	**VE Team**

Spec Div	Description	Quan	Unit Cost	Install	Loc Factor	Subtotal	Total
Spec 40 91 00 Instrumentation and Control Components							
	Control Logix 1756-PA72 Power Supply	**1**	**$840.00**	**$ 92.40**	**1**	**$932.40**	
	Control Logix 1756-L63 PLC Processor	**1**	**$17,944.44**	**$ 1,973.89**	**1**	**$19,918.33**	
	Control Logix 1756-ENBT Ethernet Communication Module	1	$1,986.00	**$ 218.46**	**1**	**$2,204.46**	
	Control Logix 1756-CNBR ControlNet	2	$1,957.58	**$ 430.67**	**1**	**$2,388.25**	
	Control Logix 1756 A7 Chassis	**1**	**$464.00**	**$ 51.04**	**1**	**$515.04**	
	Control Logix 1794-ACNR Redundant Flex IO Modules	**4**	**$1,852.00**	**$ 814.88**	**1**	**$2,666.88**	
	Control Logix 1756 ControlNet Cabling	**1**	**$1,500.00**	**$ 165.00**	**1**	**$1,665.00**	
	Control Logix 1756 RM Redundant Module	1	$4,625.00	**$ 508.75**	**1**	**$5,133.75**	
	Control Logix 1794-CAN 15 Flex IO Modules*	**4**	**($672.00)**	**$ (295.68)**	**1**	**($967.68)**	
							$34,456.43

BORDER STATES
Supply Chain Solutions™

Border States Electric Supply
Harris Electric Supply

Quote

BSE Quote: 22444861
Sold-to Acct #: 90410
Valid From: 08/24/2011 **To:** 08/31/2011
PO No: RFQ

Created By: Rebecca Janssen
Tel No: 602-244-0331
Fax No: 602-231-8535

Harris Electric Supply - NAS
656 Wedgewood Ave
Nashville TN 37203-5527
Phone: 615-255-4161

CH2M Hill Constructors Inc-Cash Acc
PO Box 241327
Denver CO 80224

Inco Terms:
FOB ORIGIN

Payment Terms:
Pay immediately w/o deduction

Taxes, if applicable, are not included.

Order Note:
PLEASE PROVIDE MORE INFORMATION ON THE REQUESTED 1794-RM; IT IS AN INVALID PART #.
****
THANK YOU FOR THE OPPORTUNITY TO QUOTE!
BSE CONTACT: REBECCA JANSSEN
rjanssen@border-states.com
602-797-4746

Cust Item	BSE Item	Material MFG - Description	**Quantity**	Price	Per UoM	Value
	000010	**102045** ALB - 1756-PA72 CONTROLLOGIX POWER SU STOCK BSE PHOENIX	**1** EA	840.60 / 1	EA	840.60
	000020	**2380785** ALB - 1756-L65 LOGIX5565 PROCESSOR 32 FACTORY STOCK	**1** EA	17,944.44 / 1	EA	17,944.44
	000030	**1185519** ALB - 1756-ENBT CONTROLLOGIX ETHERNET STOCK BSE PHOENIX	**1** EA	1,986.36 / 1	EA	1,986.36
	000040	**837520** ALB - 1756-CNBR CONTROLNET BRIDGE MOD FACTORY STOCK	**1** EA	1,957.58 / 1	EA	1,957.58
	000050	**837520** ALB - 1756-CNBR CONTROLNET BRIDGE MOD FACTORY STOCK	**1** EA	1,957.58 / 1	EA	1,957.58
	000060	**101777** ALB - 1756-A7 CONTROLLOGIX 7 SLOT CHA STOCK BSE PHOENIX	**1** EA	464.45 / 1	EA	464.45
	000070	**1008634** ALB - 1794-ACNR FLEX CONTROLNET ADAPT FACTORY STOCK	**1** EA	1,852.02 / 1	EA	1,852.02

Total Value **27,003.03**

To access BSE's Terms and Conditions of Sale, please go to
https://www.borderstateselectric.com

This quote has not been reviewed for compliance with the Buy American Act or the American Recovery and Reinvestment Act requirements. BSE reserves the right to amend both our bill of material and our proposal accordingly if BAA/ARRA compliance is required.

CH2MHILL

Value Engineering Proposal No. 11

Date: August 24, 2011 Project Name: Perris WFP Reject Recovery VE Study

Proposal Description

Consider the specification of a 65-kilo-amperes interrupting capacity (kAIC) standard-rated motor control center (MCC) in lieu of the 100-kAIC MCC, if supported by the power system analysis that would be required as part of the project electrical design.

Consider a standard-rated MCC for the RRF with a 3-phase, 3-wire bus configuration in lieu of the 3-phase, 4-wire as shown, if no single-phase 277-volt line-to-neutral connections are required.

Coordinate MCC-RRF ratings as identified on MWH's Electrical Single Line Diagram -1 Drawing E-2 and Electrical Single Line Diagram -3 E-3.

Remarks

MWH's Electrical Signal Line Diagram identifies MCC-RRF as being a 100-kAIC rated (3-phase, 4-wire) powered from existing Panelboard PD-1, which in turn is powered from existing switchgear SG-1. MCCs with 65-kAIC rated protective devices and 65-kAIC bus bracing are standard; 100-kAIC rated assemblies incur additional costs. MCC-RRF does not require a 3-phase, 4-wire bus arrangement since the design does not identify 277-volt line-to-neutral connections.

Initial Savings +	Future Savings =	Present Worth Savings
$36,000	$0	$36,000

Discussion

This proposal is contingent upon the completion of a power system analysis on the existing and revised power distribution system identifying demand, load flow, and fault current at various power distribution equipment.

Sketches

See attached.

Calculations

N/A.

Cost Estimate

See attached.

Assumptions

Available interrupting current at MCC-RRF is less than 65 kAIC.

The design does not incorporate or require 277-volt line-to-neutral connections.

Documentation

MWH Electrical Single Line Diagram -1 Drawing E-2.

MWH Electrical Single Line Diagram -2 Drawing E-3.

Conclusion

The VE Team recommends completing a power system analysis that will confirm required amperes interrupting capacity at MCC-RRF. The VE Team also recommends the Design Team consider a standard-rated MCC-RRF with 65 kAIC, 3-phase, 3-wire rating and bus configuration.

Plot Date: 12-AUG-2011 16:54
User: jsmorris
ColorTable: bw.ctb DesignScript: MWH_Iplot_PenTable_V99.pen PlotScale: 1:1
Model: Layout1
File: EMWD_E02.dgn

SHEET KEYNOTES

A. CONTRACTOR SHALL FURNISH, INSTALL AND CONNECT A NEW 600A TRIP, 600A FRAME BREAKER OF LIKE KIND IN PD-2. CONTRACTOR SHALL FURNISH, INSTALL AND CONNECT NEW WIRING FROM PD-2 TO NEW MOTOR CONTROL CENTER MCC-RRF. SEE SHEET E-? FOR CONDUIT AND WIRING REQUIREMENTS.

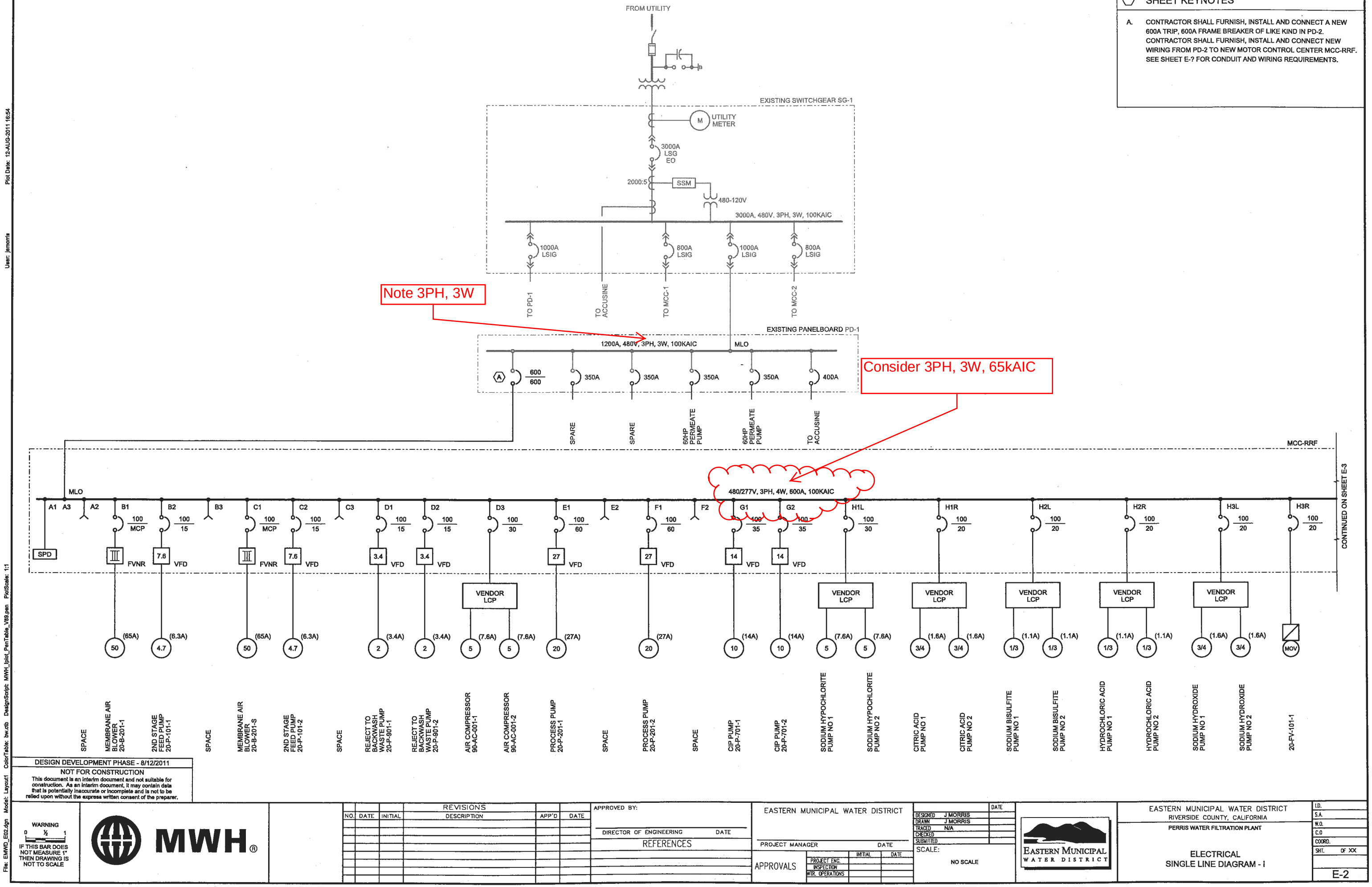

DESIGN DEVELOPMENT PHASE - 8/12/2011

NOT FOR CONSTRUCTION

This document is an interim document and not suitable for construction. As an interim document, it may contain data that is potentially inaccurate or incomplete and is not to be relied upon without the express written consent of the preparer.

WARNING
0 ½ 1
IF THIS BAR DOES NOT MEASURE 1" THEN DRAWING IS NOT TO SCALE

MWH®

REVISIONS					
NO.	DATE	INITIAL	DESCRIPTION	APP'D	DATE

APPROVED BY:

DIRECTOR OF ENGINEERING DATE

REFERENCES

EASTERN MUNICIPAL WATER DISTRICT

PROJECT MANAGER DATE

APPROVALS

	INITIAL	DATE
PROJECT ENG.		
INSPECTION		
MTR. OPERATIONS		

	DATE
DESIGNED J MORRIS	
DRAWN J MORRIS	
TRACED N/A	
CHECKED	
SUBMITTED	

SCALE: NO SCALE

EASTERN MUNICIPAL WATER DISTRICT

EASTERN MUNICIPAL WATER DISTRICT
RIVERSIDE COUNTY, CALIFORNIA
PERRIS WATER FILTRATION PLANT

ELECTRICAL
SINGLE LINE DIAGRAM - I

I.D.	
S.A.	
W.O.	
C.O	
COORD.	
SHT.	OF XX

E-2

File: EMWD_E03.dgn Model: Layout1 ColorTable: bw.ctb DesignScript: MWH_fplot_PenTable_V89.pen PlotScale: 1:1 User: jemorris Plot Date: 12-AUG-2011 16:54

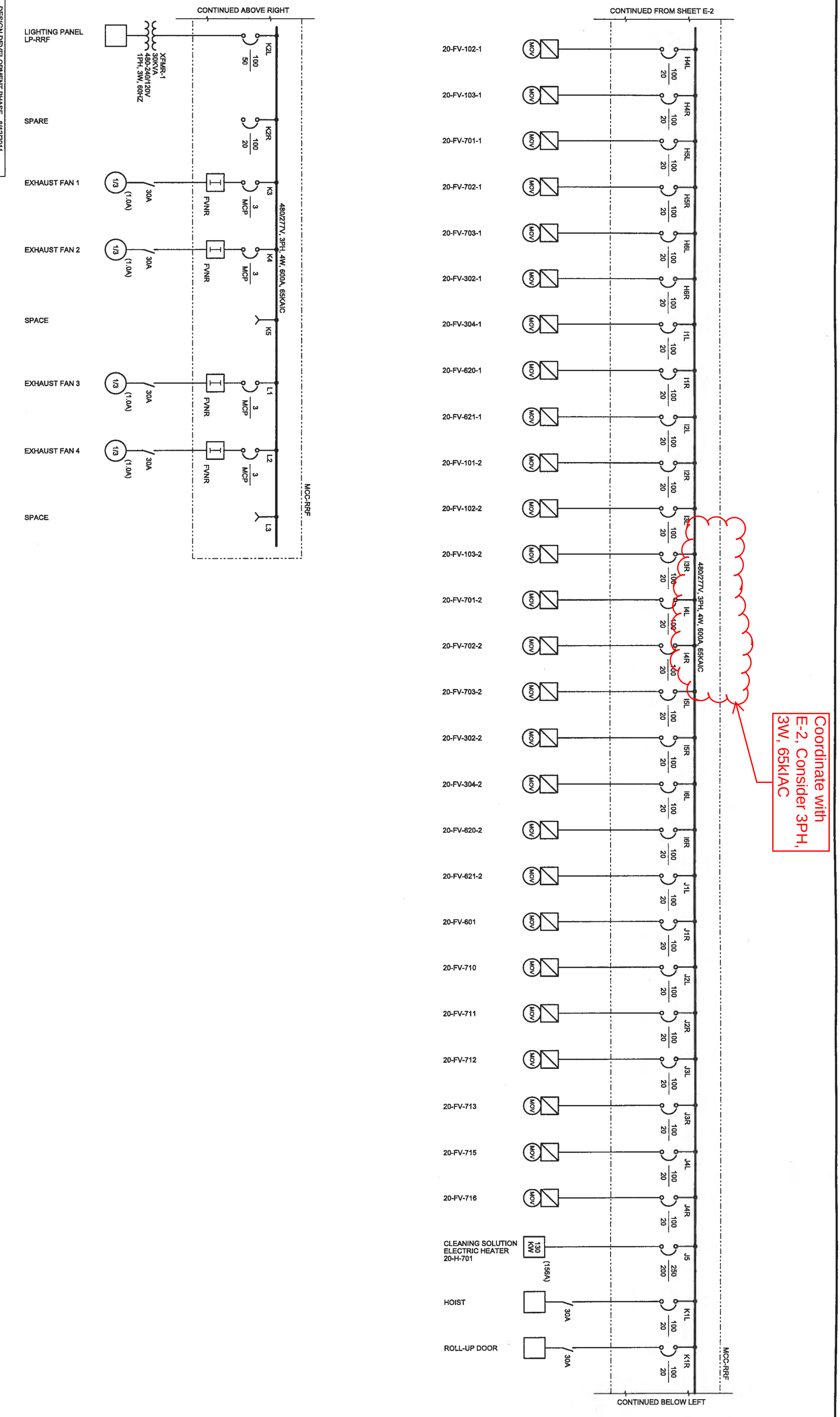

WARNING
IF THIS BAR DOES NOT MEASURE 1" THEN DRAWING IS NOT TO SCALE
0 ½ 1

DESIGN DEVELOPMENT PHASE - 8/12/2011
NOT FOR CONSTRUCTION
This document is an interim document and not suitable for construction. As an interim document, it may contain data that is potentially inaccurate or incomplete and is not to be relied upon without the express written consent of the preparer.

MWH®

REVISIONS			
NO.	DESCRIPTION	APP'D	DATE

APPROVALS		
		DATE
DIRECTOR OF ENGINEERING		DATE
PROJECT MANAGER		DATE
PROJECT ENG.	INITIAL	DATE
INSPECTION		
MTR. OPERATIONS		

APPROVED BY:

REFERENCES

EASTERN MUNICIPAL WATER DISTRICT

DESIGNED	J.MORRIS
DRAWN	J.MORRIS
TRACED	N/A
CHECKED	
SUBMITTED	

SCALE: NO SCALE

EASTERN MUNICIPAL WATER DISTRICT

EASTERN MUNICIPAL WATER DISTRICT
RIVERSIDE COUNTY, CALIFORNIA
PERRIS WATER FILTRATION PLANT

ELECTRICAL
SINGLE LINE DIAGRAM - II

I.D.
S.A.
W.O.
C.O
CO/RO.
SH.T. OF XX

E-3

CH2M HILL - Project Estimate for VE

Project:	PWFP - Reject Recovery Facility	**Estimate Date:**	**8/25/2011**
Project No.:		**Midpoint of Construction:**	**Oct 2012**
Location:	Perris, CA	**Location Factor:**	**As Noted**
Proposal #:	11	**Estimate Prepared By:**	**REL**
Descr:	Use standard kAIC-rate motor control center	**Estimate Reviewed By:**	**VE Team**

Spec Div	Description	Quan	Unit Cost	Install	Loc Factor	Subtotal	Total
Spec 26 24 19 Low-Voltage Motor Control				**NA**			
65kAIC Bracing and Protective Device Rating	Motor Control Center 65kAIC, 600Amp, 3-phase, 3-wire, 480V with ground						
	NEMA 1 Gasketed Indoor Mounted with 12 Sections, Copper Busing	12	$3,685.00	$ -	1.00	$44,220.00	
	Main Lug (MLO)	1	$2,500.00	$ -	1.00	$2,500.00	
	FVNR NEMA Size 3 Starter - 50HP	2	$5,575.00	$ -	1.00	$11,150.00	
	FVNR NEMA Size 1 Starter - 1/3HP	4	$2,100.00	$ -	1.00	$8,400.00	
	VFD NEMA Size 1 - 5HP	2	$13,625.00	$ -	1.00	$27,250.00	
	VFD NEMA Size 1 - 2HP	2	$13,625.00	$ -	1.00	$27,250.00	
	VFD NEMA Size 2 - 20HP	2	$35,624.00	$ -	1.00	$71,248.00	
	VFD NEMA Size 2 - 10HP	2	$22,505.00	$ -	1.00	$45,010.00	
	Molded Case 30AT/100AF	2	$1,150.00	$ -	1.00	$2,300.00	
	Molded Case 20AT/100AF	30	$1,150.00	$ -	1.00	$34,500.00	
	Molded Case 50AT/100AF	1	$1,175.00	$ -	1.00	$1,175.00	
	Molded Case 250AT/250AF	1	$2,050.00	$ -	1.00	$2,050.00	
	Surge Protection TVSS	1	$2,625.00	$ -	1.00	$2,625.00	
							$235,458
100kAIC Bracing and Protective Device Rating	Motor Control Center 100kAIC, 600Amp, 3-phase, 3-wire, 480V with ground						
	NEMA 1 Gasketed Indoor Mounted with 12 Sections and Copper Busing	12	$4,435.00	$ -		$53,220.00	
	Main Lug (MLO)	1	$3,250.00	$ -	1.00	$3,250.00	
	FVNR NEMA Size 3 Starter - 50HP	2	$6,775.00	$ -	1.00	$13,550.00	
	FVNR NEMA Size 1 Starter - 1/3HP	4	$2,850.00	$ -	1.00	$11,400.00	
	VFD NEMA Size 1 - 5HP	2	$14,375.00	$ -	1.00	$28,750.00	
	VFD NEMA Size 1 - 2HP	2	$14,375.00	$ -	1.00	$28,750.00	
	VFD NEMA Size 2 - 20HP	2	$35,624.00	$ -	1.00	$71,248.00	
	VFD NEMA Size 2 - 10HP	2	$23,255.00	$ -	1.00	$46,510.00	
	Molded Case 30AT/100AF	2	$1,900.00	$ -	1.00	$3,800.00	
	Molded Case 20AT/100AF	30	$1,900.00	$ -	1.00	$57,000.00	
	Molded Case 50AT/100AF	1	$1,925.00	$ -	1.00	$1,925.00	
	Molded Case 250AT/250AF	1	$2,800.00	$ -	1.00	$2,800.00	
	Surge Protection TVSS	1	$2,625.00	$ -	1.00	$2,625.00	
							$271,608
	Cost Difference						**$36,150**

Assume installation costs are identical
RSM Means Cost Data 2011 and GE BuyLog

CH2MHILL

Value Engineering Proposal No. 12

Date: August 24, 2011 Project Name: Perris WFP Reject Recovery VE Study

Proposal Description

Reduce the number of feeder breakers within the motor control center (MCC) and sections by powering multiple process flow control valves from common power feeders.

Remarks

MWH Electrical Signal Line Diagram -1 and Diagram -2 and Drawings E-2 and E-3 identify MCC-mounted dedicated breakers for each flow control valve.

MWH Electrical Control Schematics III on Drawing E-7 identifies the installation of a field-mounted enclosed breaker dedicated for each flow control valve to satisfy the requirements of NEC Article 430.102 (B).

Note: There are 27 flow control valves.

Initial Savings +	Future Savings =	Present Worth Savings
$32,000	$0	$32,000

Advantages	Disadvantages
Reduces number of MCC sections and protective devices	None identified
Reduces installation costs	
Reduces MCC footprint, which may facilitate mounting of MCC along with existing conduit and cable floor trench	

Discussion

Reducing the number of feeder breakers will also reduce the MCC lineup by two sections.

The MCC footprint is constrained by under-floor conduit and cable trench. Reducing the MCC footprint may support conduit and cable access from the existing trench.

Sketches

See attached.

Calculations

N/A.

Cost Estimate

See attached.

Assumptions

Assume maximum four feeders for 27 valves: approximately 7 valves per feeder.

Documentation

MWH Electrical Signal Line Diagram -1 Drawing E-2.

MWH Electrical Signal Line Diagram -2 Drawing E-3.

MWH Electrical Equipment Elevations Drawing E-4.

MWH Electrical control Schematics –III Drawing E-7.

Conclusion

The VE Team recommends reducing the number of feeder breakers inside the MCC by powering multiple process flow control valves from common power feeders.

User: jamonte Plot Date: 12-AUG-2011 16:54
File: EMWD_E02.dgn Model: Layout1 ColorTable: bw.ctb DesignScript: MWH_Iplot_PenTable_V89.pen PlotScale: 1:1

SHEET KEYNOTES

A. CONTRACTOR SHALL FURNISH, INSTALL AND CONNECT A NEW 600A TRIP, 600A FRAME BREAKER OF LIKE KIND IN PD-2. CONTRACTOR SHALL FURNISH, INSTALL AND CONNECT NEW WIRING FROM PD-2 TO NEW MOTOR CONTROL CENTER MCC-RRF. SEE SHEET E-? FOR CONDUIT AND WIRING REQUIREMENTS.

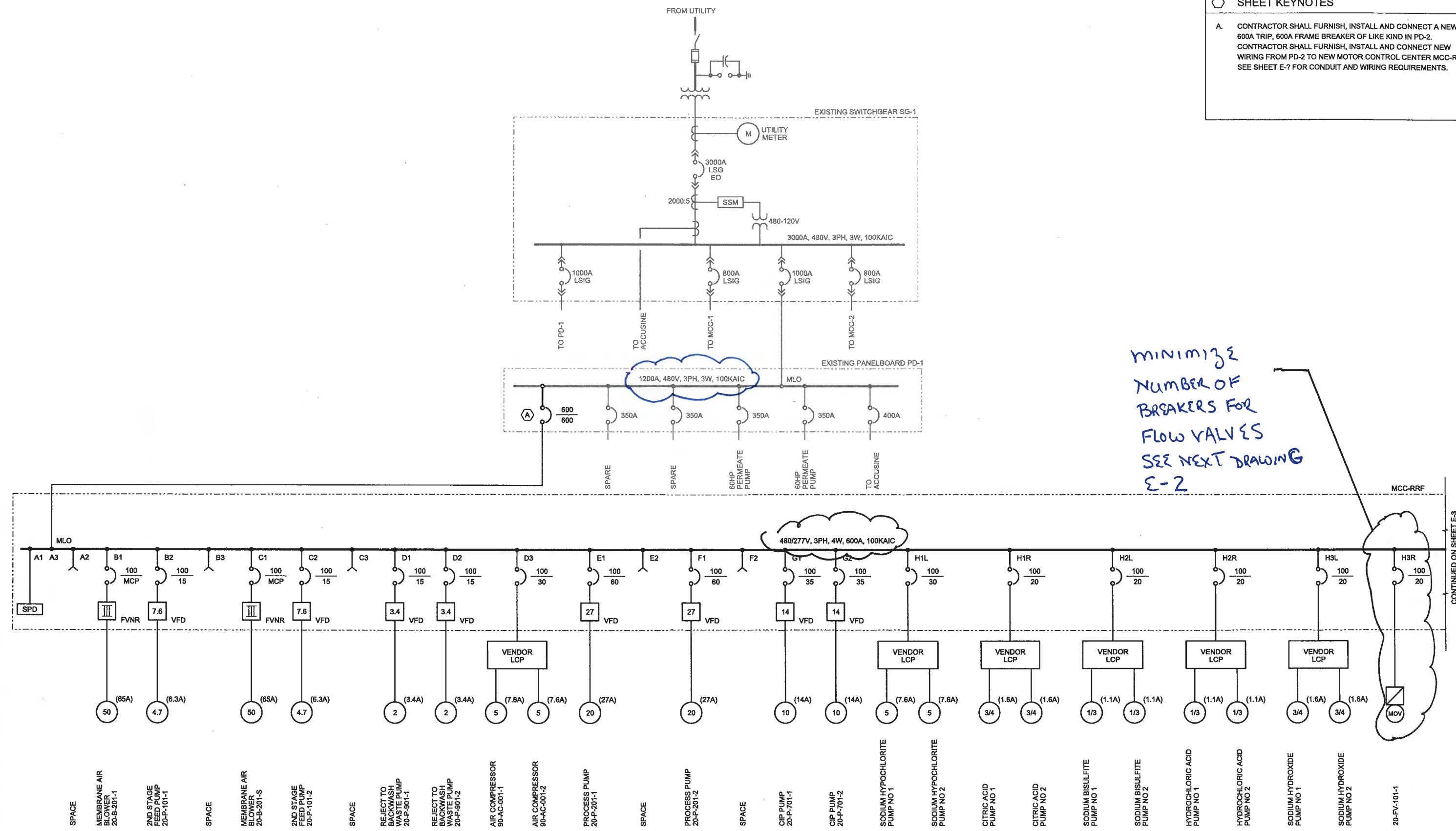

MINIMIZE NUMBER OF BREAKERS FOR FLOW VALVES SEE NEXT DRAWING E-2

DESIGN DEVELOPMENT PHASE - 8/12/2011

NOT FOR CONSTRUCTION

This document is an interim document and not suitable for construction. As an interim document, it may contain data that is potentially inaccurate or incomplete and is not to be relied upon without the express written consent of the preparer.

WARNING
0 ½ 1
IF THIS BAR DOES NOT MEASURE 1" THEN DRAWING IS NOT TO SCALE

MWH®

REVISIONS NO.	DATE	INITIAL	DESCRIPTION	APP'D	DATE

APPROVED BY:

DIRECTOR OF ENGINEERING DATE

REFERENCES

EASTERN MUNICIPAL WATER DISTRICT

PROJECT MANAGER DATE

APPROVALS

	INITIAL	DATE
PROJECT ENG.		
INSPECTION		
WTR. OPERATIONS		

	DATE
DESIGNED J MORRIS	
DRAWN J MORRIS	
TRACED N/A	
CHECKED	
SUBMITTED	

SCALE: NO SCALE

EASTERN MUNICIPAL WATER DISTRICT

EASTERN MUNICIPAL WATER DISTRICT
RIVERSIDE COUNTY, CALIFORNIA
PERRIS WATER FILTRATION PLANT

ELECTRICAL
SINGLE LINE DIAGRAM - I

I.D.	
S.A.	
W.O.	
C.O	
COORD.	
SHT.	OF XX

E-2

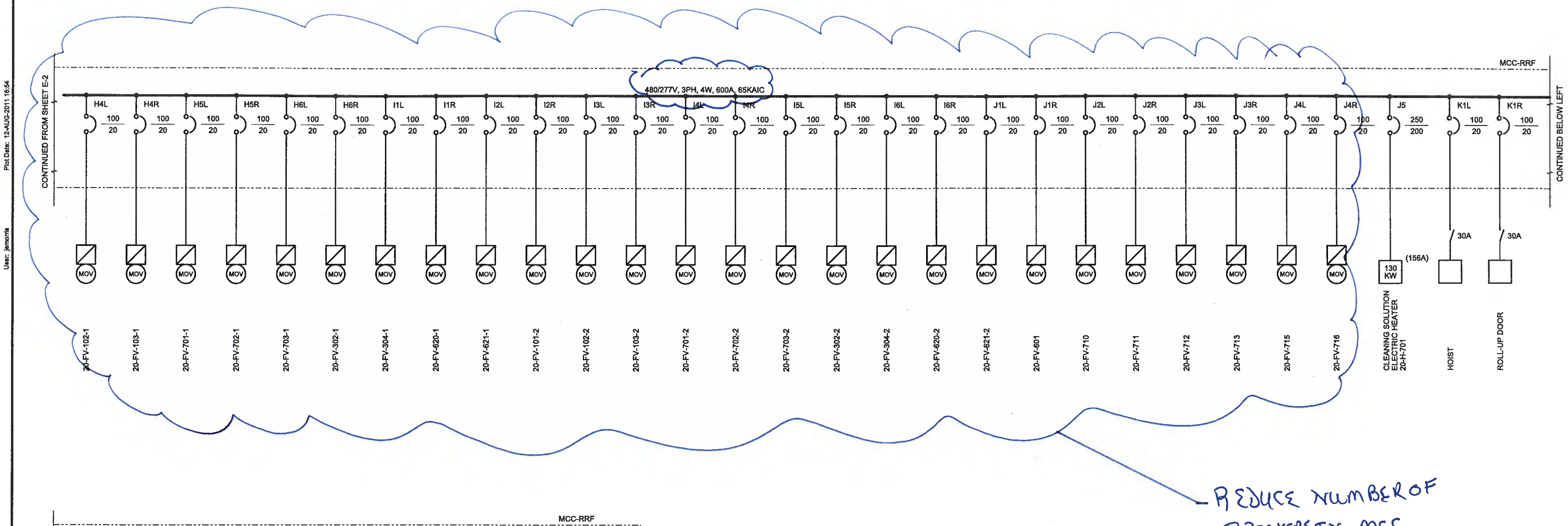

REDUCE NUMBER OF BREAKERS IN MCC FOR VALVES

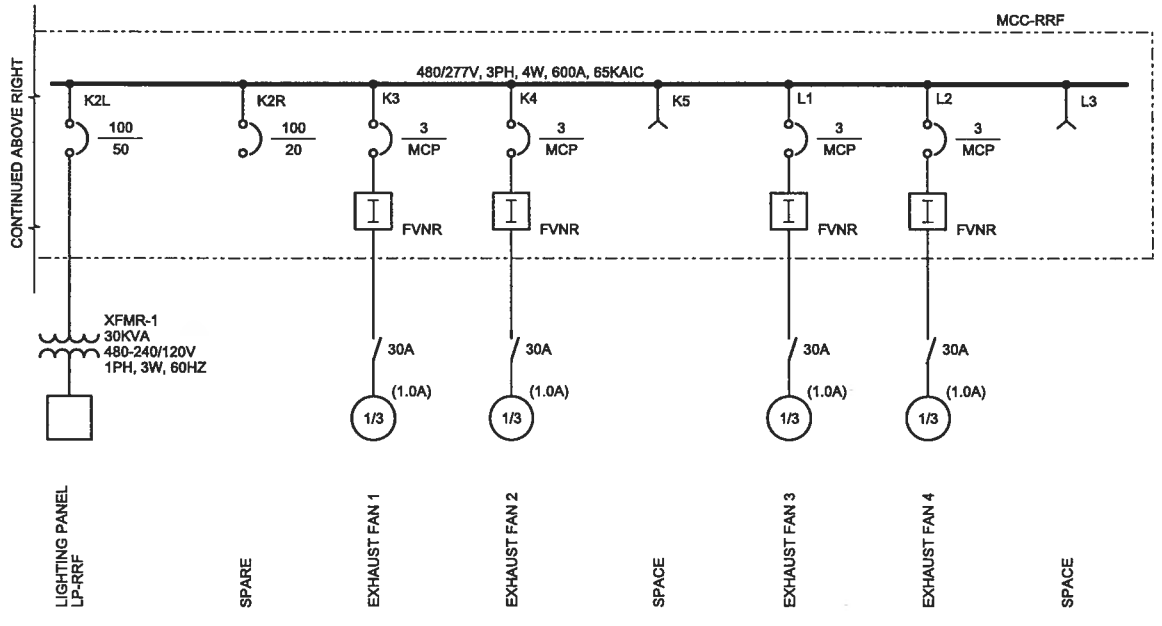

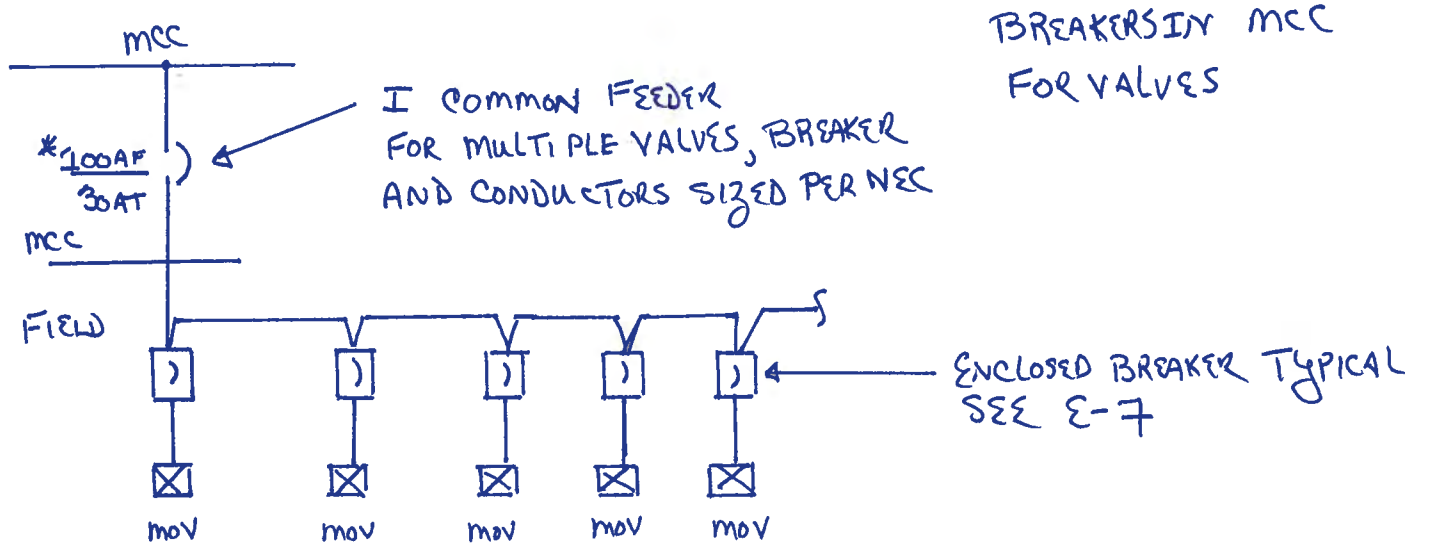

TYPICAL APPROACH FOR FLOW VALVES

DESIGN DEVELOPMENT PHASE - 8/12/2011

NOT FOR CONSTRUCTION

This document is an interim document and not suitable for construction. As an interim document, it may contain data that is potentially inaccurate or incomplete and is not to be relied upon without the express written consent of the preparer.

WARNING 0 ½ 1 IF THIS BAR DOES NOT MEASURE 1" THEN DRAWING IS NOT TO SCALE

MWH®

NO.	DATE	INITIAL	REVISIONS DESCRIPTION	APP'D	DATE

APPROVED BY:

DIRECTOR OF ENGINEERING DATE

REFERENCES

EASTERN MUNICIPAL WATER DISTRICT

PROJECT MANAGER DATE

APPROVALS

	INITIAL	DATE
PROJECT ENG.		
INSPECTION		
WTR. OPERATIONS		

	DATE
DESIGNED J MORRIS	
DRAWN J MORRIS	
TRACED N/A	
CHECKED	
SUBMITTED	

SCALE: NO SCALE

EASTERN MUNICIPAL WATER DISTRICT

EASTERN MUNICIPAL WATER DISTRICT
RIVERSIDE COUNTY, CALIFORNIA
PERRIS WATER FILTRATION PLANT

ELECTRICAL
SINGLE LINE DIAGRAM - II

I.D.	
S.A.	
W.O.	
C.O	
COORD.	
SHT.	OF XX

E-3

Plot Date: 12-AUG-2011 16:54
User: jwmorris
File: EMWD_E03.dgn Model: Layout1 ColorTable: bw.ctb DesignScript: MWH_plot_PenTable_V89.pen PlotScale: 1:1

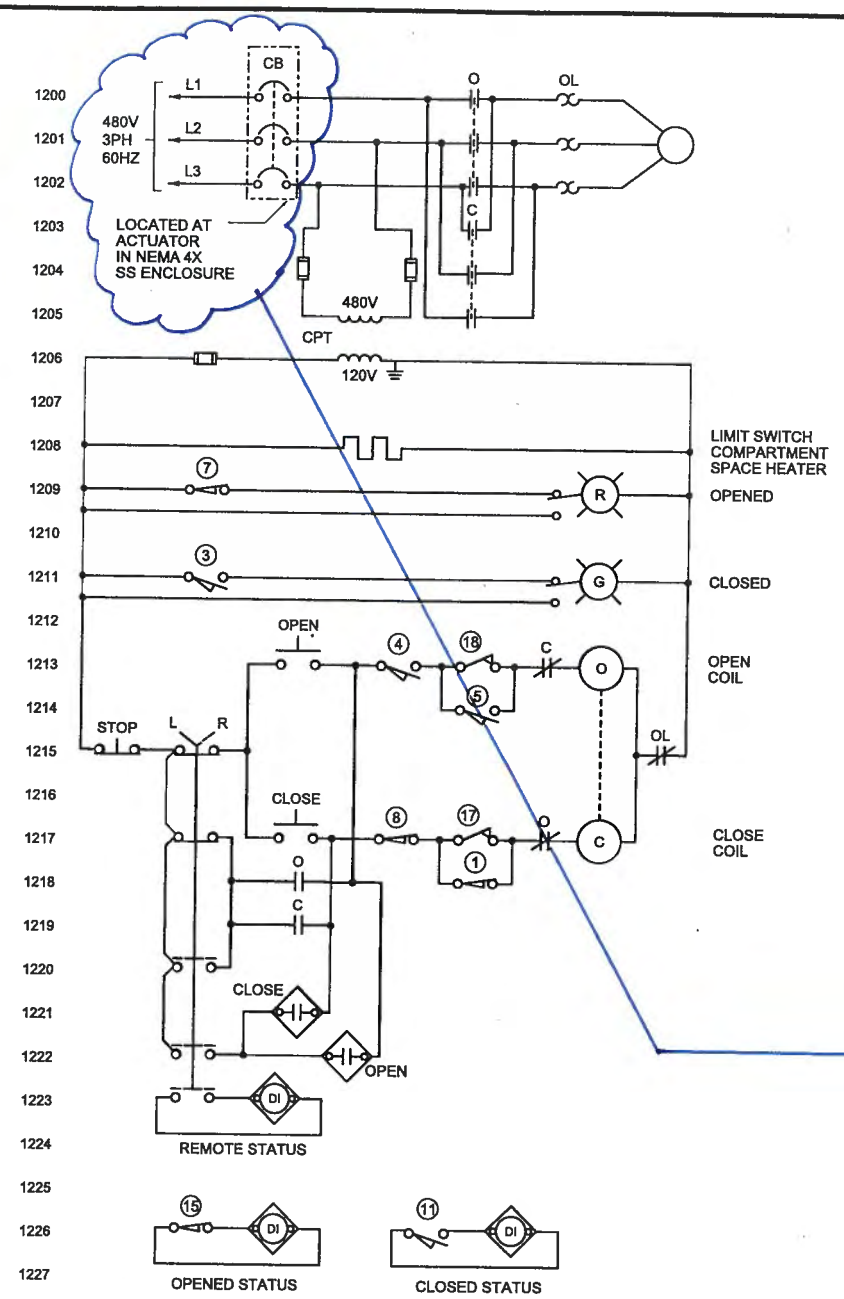

OPEN/CLOSE FLOW CONTROL VALVE

(TYPICAL FOR VALVES 20-FV-101-1, 102-1, 103-1, 302-1, 304-1, 620-1, 621-1, 701-1, 702-1, 703-1, 101-2, 102-2, 103-2, 302-2, 304-2, 620-2, 621-2, 601, 710, 711, 712, 713, 715, 716)

LIMIT SWITCH CONTACT DEVELOPMENT

LIMIT SWITCH CONTACT	VALVE POSITION: FULL OPEN	FULL CLOSE	FUNCTION
1	———	-----	BY-PASS-CIR
2	———	-----	SPARE
3	-----	———	IND LIMIT
4	-----	———	OPEN LIMIT
5	-----	———	BY-PASS-CIR
6	-----	———	SPARE
7	———	-----	IND LIGHT
8	———	-----	CLOSED LIMIT
9	———	-----	SPARE
10	———	-----	SPARE
11	-----	———	STATUS
12	-----	———	SPARE
13	-----	———	SPARE
14	-----	———	SPARE
15	———	-----	STATUS
16	———	-----	SPARE

NOTES:

1. OPEN CONTACT ----------
2. CLOSE CONTACT ———
3. VALVE SHOWN IN FULL OPENED POSITION.
4. ALL COMPONENTS LOCATED WITHIN VALVE HOUSING UNLESS OTHERWISE INDICATED.

(17) CLOSING TORQUE SWITCH INTERRUPTS CONTROL CIRCUIT IF MECHANICAL OVERLOAD OCCURS DURING CLOSING CYCLE

(18) OPENING TORQUE SWITCH INTERRUPTS CONTROL CIRCUIT IF MECHANICAL OVERLOAD OCCURS DURING OPENING CYCLE

with ENCLOSED BREAKER AT EACH VALVE, CONSIDER LIMITING (REDUCING) NUMBER OF BREAKERS IN MCC.

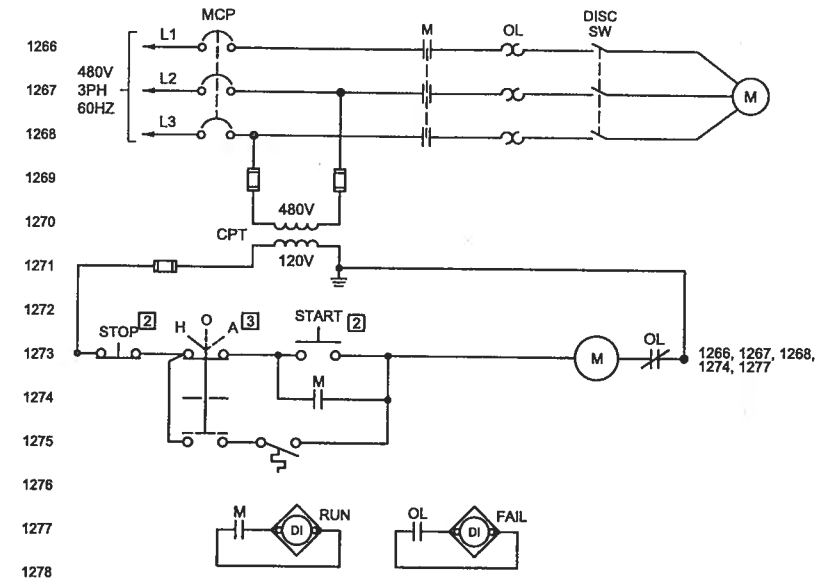

EXHAUST FAN CONTROL SCHEMATIC

(TYPICAL FOR EXHAUST FANS 1, 2, 3, 4)

[1] FIELD
[2] LCS
[3] VFD/MCC
[4] PLC

DESIGN DEVELOPMENT PHASE - 8/12/2011

NOT FOR CONSTRUCTION

This document is an interim document and not suitable for construction. As an interim document, it may contain data that is potentially inaccurate or incomplete and is not to be relied upon without the express written consent of the preparer.

WARNING
½ 1
THIS BAR DOES NOT MEASURE 1" ON DRAWING IS NOT TO SCALE

MWH®

NO.	DATE	INITIAL	REVISIONS DESCRIPTION	APP'D	DATE
R1	Rdate1	Rby1	Rdes1		
R2	Rdate2	Rby2	Rdes2		
R3	Rdate3	Rby3	Rdes3		
R4	Rdate4	Rby4	Rdes4		
R5	Rdate5	Rby5	Rdes5		

APPROVED BY:

DIRECTOR OF ENGINEERING DATE

REFERENCES

EASTERN MUNICIPAL WATER DISTRICT

PROJECT MANAGER DATE

APPROVALS

	INITIAL	DATE
PROJECT ENG.		
INSPECTION		
WTR. OPERATIONS		

	DATE
DESIGNED J MOHR	
DRAWN J MORRIS	
TRACED N/A	
CHECKED	
SUBMITTED	

SCALE: NO SCALE

EASTERN MUNICIPAL WATER DISTRICT

EASTERN MUNICIPAL WATER DISTRICT
RIVERSIDE COUNTY, CALIFORNIA
PERRIS WATER FILTRATION PLANT

ELECTRICAL
CONTROL SCHEMATICS - III

I.D.	
S.A.	
W.O.	
C.O	
COORD.	
SHT.	OF XX

E-7

User: jemorris Plot Date: 12-AUG-2011 16:54
File: EMWD_E04.dgn Model: Layout1 ColorTable: bw.ctb DesignScript: MWH_Iplot_PenTable_V88.pen PlotScale: 1:1

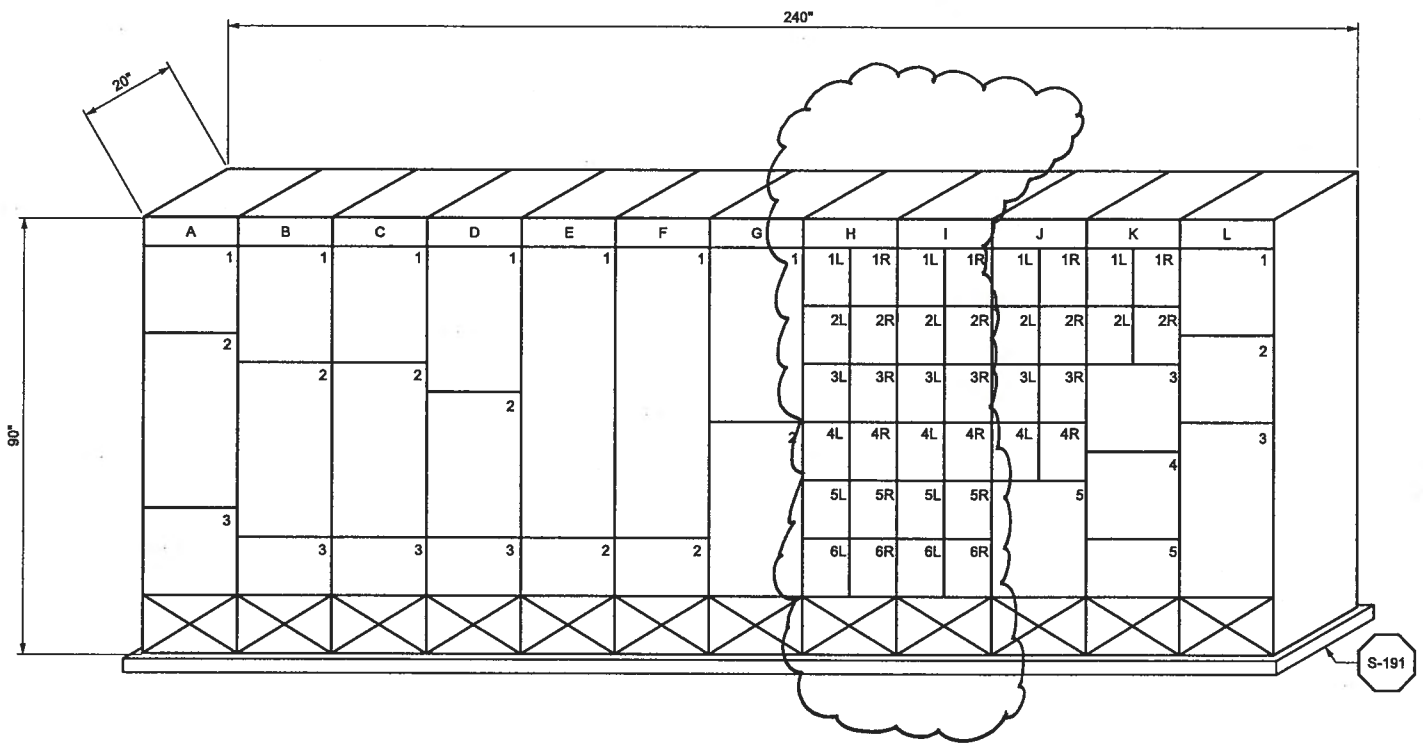

DESIGN DEVELOPMENT PHASE - 8/12/2011

NOT FOR CONSTRUCTION

This document is an interim document and not suitable for construction. As an interim document, it may contain data that is potentially inaccurate or incomplete and is not to be relied upon without the express written consent of the preparer.

WARNING
0 ½ 1
IF THIS BAR DOES NOT MEASURE 1" THEN DRAWING IS NOT TO SCALE

MWH®

REVISIONS					
NO.	DATE	INITIAL	DESCRIPTION	APP'D	DATE

APPROVED BY:

DIRECTOR OF ENGINEERING DATE

REFERENCES

EASTERN MUNICIPAL WATER DISTRICT

PROJECT MANAGER DATE

APPROVALS

	INITIAL	DATE
PROJECT ENG.		
INSPECTION		
MTR. OPERATIONS		

	DATE
DESIGNED J MORRIS	
DRAWN J MORRIS	
TRACED N/A	
CHECKED	
SUBMITTED	

SCALE: NO SCALE

EASTERN MUNICIPAL WATER DISTRICT

EASTERN MUNICIPAL WATER DISTRICT
RIVERSIDE COUNTY, CALIFORNIA
PERRIS WATER FILTRATION PLANT

ELECTRICAL EQUIPMENT ELEVATIONS

I.D.	
S.A.	
W.O.	
C.O	
COORD.	
SHT.	OF XX

E-4

CH2M HILL - Project Estimate for VE

Project:	PWFP - Reject Recovery Facility	**Estimate Date:**	**8/25/2011**
Project No.:		**Midpoint of Construction:**	**Oct 2012**
Location:	Perris, CA	**Location Factor:**	**As Noted**
Proposal #:	12	**Estimate Prepared By:**	**REL**
Descr:	Use common feed fuse disconnect for valves	**Estimate Reviewed By:**	**VE Team**

Spec Div	Description	Quan	Unit Cost	Install	Loc Factor	Subtotal	Total
Spec 26 24 19 Low-Voltage Motor Control				**NA**			
65kAIC Bracing and Protective Device Rating	Motor Control Center 65kAIC, 600Amp, 3-phase, 3-wire, 480V with ground	2	$2,625.00	$ -	1.00	$5,250.00	
	Molded Case 20AT/100AF	27	$1,150.00	$ -	1.00	$31,050.00	
	Molded Case 30AT/100AF	4	($1,150.00)	$ -	1.00	($4,600.00)	
							$31,700
	Cost Difference						**$31,700**

Assume installation costs are identical

CH2MHILL

Value Engineering Proposal No. 13

Date: August 24, 2011 Project Name: Perris WFP Reject Recovery VE Study

Proposal Description

Remove the shade and superstructure and extend a separate cover over the valves between the buildings (in place of the catwalk). Raise the ground surface between the membrane tanks and building to provide access to valves standing up (deletes the need for the catwalk).

Initial Savings +	Future Savings =	Present Worth Savings
$29,000	$0	$29,000

Advantages	Disadvantages
Provides ergonomics and safety features by allowing operators to reach the membrane valves from below	Covers only the valves and not the entire membrane area
Deletes the need for a catwalk and replaces it with a smaller canopy cover for the valves	

Discussion

This proposal recommends removing the shade and superstructure and replacing the catwalk with a shade canopy. The valves will need to be rotated so the operators can access them from the ground between the structures. The monorail will be the only visible framing above the membrane tank.

Sketches

See attached.

Cost Estimate

See attached.

Assumptions

The proposal assumes the superstructure is constructed of steel framing with fabric on top to provide shade.

The new canopy over the valves (in place of the catwalk) is assumed to be made of fabric similar to the existing membrane cover and the framing support system will be constructed of aluminum framing.

Add fill material between structures at about 3 feet, with 6 inches of concrete slab-on-grade.

Documentation

Design Drawing C-8, Section A shows a cross-section of the buildings.

Conclusion

A cost savings of $29,000 will be realized if these changes are implemented. The operators will benefit from not having to bend over the catwalks to reach the valves from above, which is a safety and ergonomics benefit.

The visual of the superstructure will be less for adjacent homeowners.

H.	#4 CLOSED TIES @ 6" O/C
I.	#5 @ 12"
J.	FINISHED GRADE PER CIVIL DWG
K.	2" ALUM GRATING PER S-501

- DELETE CATWALK
- INSTALL CANOPY TO SHADE VALVES

DELETE SUPERSTRUCTURE FOR SHADE

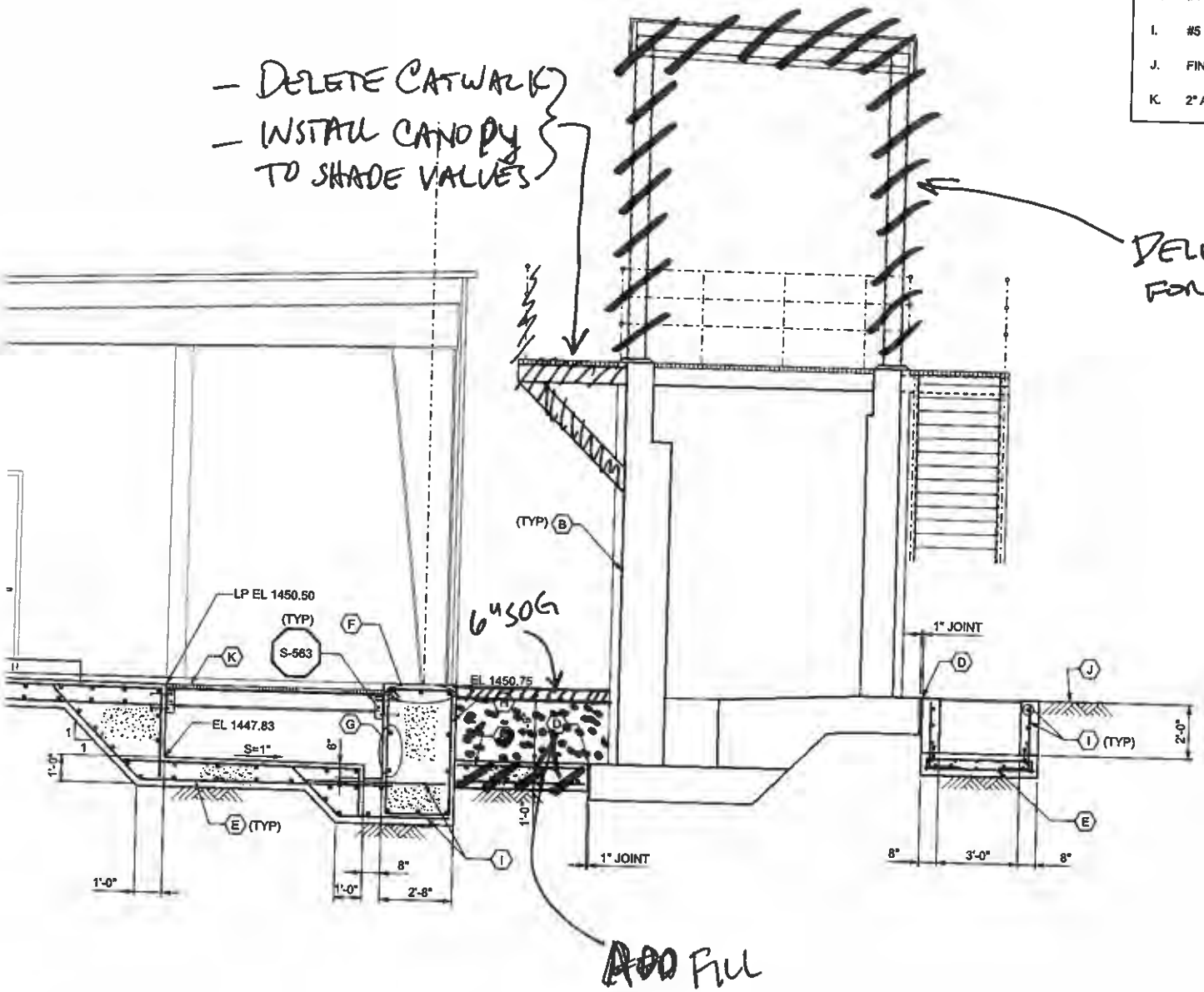

N

A
S-1

APP'D	DATE	APPROVED BY:	EASTERN MUNICIPAL WATER DISTRICT		DATE	EASTERN MUNICIPAL WATER DISTRICT RIVERSIDE COUNTY, CALIFORNIA	I.D.
		DIRECTOR OF ENGINEERING DATE		DESIGNED P NGUYEN		PERRIS WATER FILTRATION PLANT	S.A.
		REFERENCES	PROJECT MANAGER DATE	DRAWN T MA			W.O.
				TRACED N/A		RRF BUILDING	C.O
			INITIAL DATE	CHECKED CHECKED			COORD.
				SUBMITTED			
				SCALE:		EASTERN MUNICIPAL	

CH2M HILL - Project Estimate for VE

Project:	PWFP - Reject Recovery Facility	**Estimate Date:**	**8/24/2011**
Project No.:		**Midpoint of Construction:**	**Oct 2012**
Location:	Perris, CA	**Location Factor:**	**As Noted**
Proposal #:	13	**Estimate Prepared By:**	**Paiz**
Descr:	Remove shade with superstructure and extend a separate cover over the valves between the buildings (in place of the catwalk). Raise ground surface between the membrane tanks and building to provide access to valves standing up (deletes the need for the catwalk).	**Estimate Reviewed By:**	**VE Team**

Spec Div	Description	Quan	Unit	Unit Cost	Loc Factor	Subtotal	Total	
	Delete original design:							
	Superstructure for shade framing	460	SF	$50	1.00	$23,000		Design estimate
	Catwalk grating and support system	50	LF	$75	1.00	$3,750		Means 2011 Cost data
	subtotal						**$26,750**	
	Proposed design:							
	Canopy in place of catwalk (4 ft wide x 46 LF)	184	SF	$35	1.00	$6,440		Estimator's judgment
	Fill material (gravel)	21	CY	$15	1.00	$319		Design estimate
	6" SOG	4	CY	$300	1.00	$1,150		Design estimate
	subtotal						**7,909**	
	Difference between proposed and original						**18,841**	
	SUBTOTAL						**$18,841**	
	Add combined markups (see notes)	**50%**					**$9,420**	
	TOTAL CONSTRUCTION COST					**savings**	**$29,000**	

Notes:

1) Breakdown for combined markups include the following:

Contractor Markups:	
Overhead	**10%**
Profit	**5%**
Mobilization, Bonds & Insurance	**7%**
Estimating Contingency	**20%**
Escalation Factor	**3%**
Market Conditions Factor	**5%**
Total combined markups	**50%**

CH2MHILL

Value Engineering Proposal No. 14

Date: August 24, 2011 Project Name: Perris WFP Reject Recovery VE Study

Proposal Description

Remove the valve and pipe floor trench from the design and provide pipe stands to support the mounting of valves and pipe above grade within the RRF.

Initial Savings +	Future Savings =	Present Worth Savings
$25,000	$0	$25,000

Advantages	Disadvantages
Increases operator access to valves	Less aesthetic
Simplifies foundation design, lowering construction costs (do not need to provide special concrete forming)	
Doesn't require a sump mechanism to drain liquids from floor trench; simplifies washdown operations	
Reduces potential trip hazards resulting from open trench covers	

Discussion

Locating valves within the floor trench requires operators to lean over and reach down to access valves.

The floor trench will collect liquids, dust, and potentially debris.

A mechanism to drain the floor trench of liquids had not been identified in the Preliminary Design Document.

Floor washdown is more complicated with a floor trench.

Sketches

See attached.

Calculations

N/A.

Cost Estimate

See attached.

Documentation

MWH Preliminary RRF Building Structural Foundation Plan Drawing S-1.
MWH Preliminary RRF Building Structural Section A Drawing S-8.

Conclusion

The VE Team recommends accepted this cost-saving proposal.

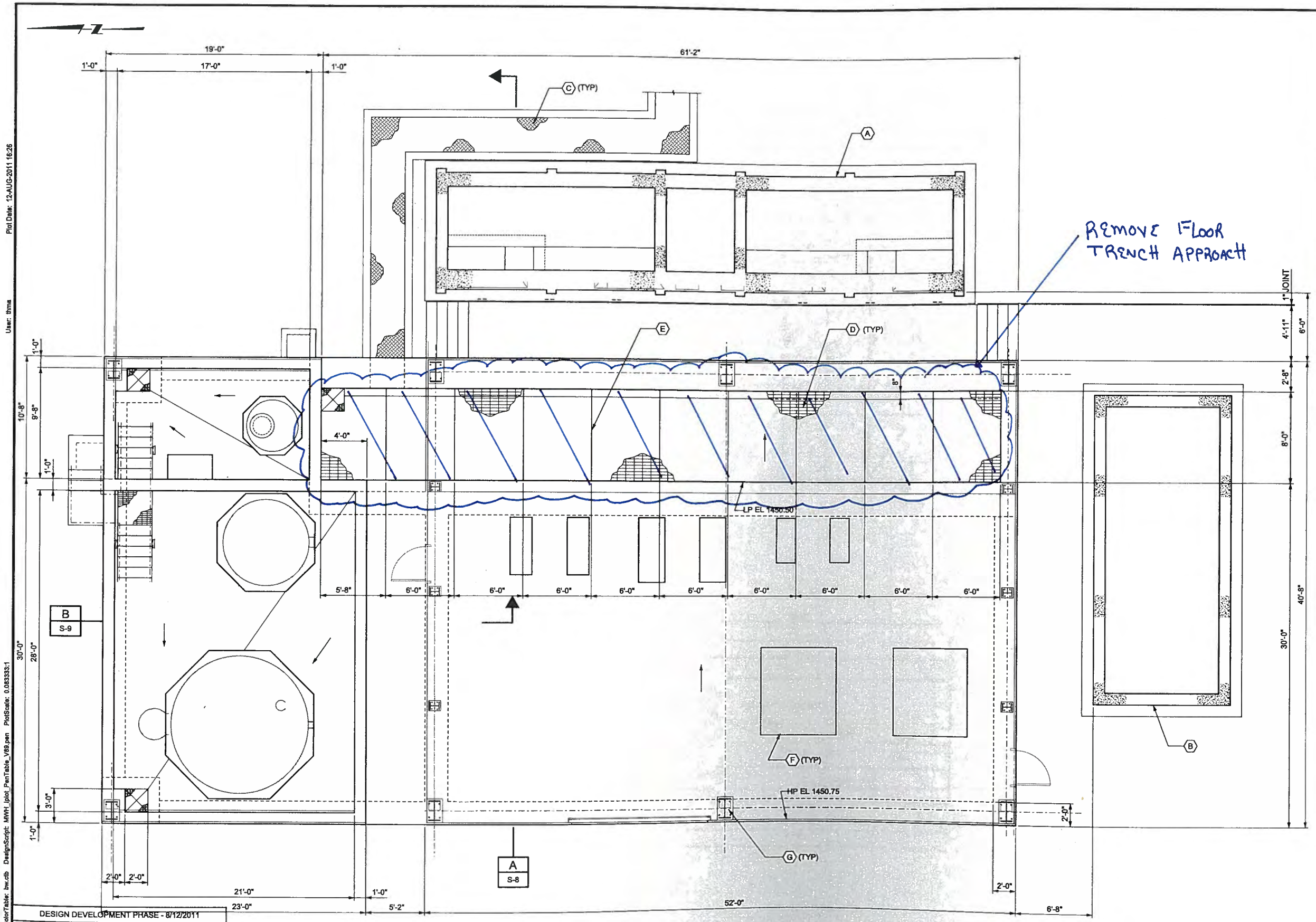

GENERAL SHEET NOTES

1. SEE SHEET GS-1 THRU GS-5 FOR GENERAL NOTES & STRUCTURAL STANDARD DETAILS.
2. RRF BUILDING SHALL BE DESIGNED BY OTHERS.
3. SEE MECH'L DWG FOR ALL PIPES & EQUIPMENTS LAYOUT.

SHEET KEYNOTES

A. MEMBRANE TANKS SEE S-2 & S-3
B. EQ BASIN SEE S-6 & S-7
C. 1/4" ALUM CHECKERED PLATE PER S-503
~~D. ALUM GRATING PER S-504~~
~~E. ALUM C8x6.48~~
F. CONC EQUIPMENT PAD PER S-191
G. RRF BUILDING COLUMN DESIGNED BY OTHER (TYP)

DESIGN DEVELOPMENT PHASE - 8/12/2011

NOT FOR CONSTRUCTION

This document is an interim document and not suitable for construction. As an interim document, it may contain data that is potentially inaccurate or incomplete and is not to be relied upon without the express written consent of the preparer.

WARNING
0 ½ 1
IF THIS BAR DOES NOT MEASURE 1" THEN DRAWING IS NOT TO SCALE

MWH®

REVISIONS					
NO.	DATE	INITIAL	DESCRIPTION	APP'D	DATE

APPROVED BY:

DIRECTOR OF ENGINEERING DATE

REFERENCES

EASTERN MUNICIPAL WATER DISTRICT

PROJECT MANAGER DATE

APPROVALS

	INITIAL	DATE
PROJECT ENG.		
INSPECTION		
WTR. OPERATIONS		

	DATE
DESIGNED P NGUYEN	
DRAWN T MA	
TRACED N/A	
CHECKED CHECKED	
SUBMITTED	

SCALE: 1/4"=1'-0"

EASTERN MUNICIPAL WATER DISTRICT

EASTERN MUNICIPAL WATER DISTRICT
RIVERSIDE COUNTY, CALIFORNIA
PERRIS WATER FILTRATION PLANT

RRF BUILDING
STRUCTURAL
FOUNDATION PLAN

I.D.	
S.A.	
W.O.	
C.O	
COORD.	
SHT.	OF XX

S-1

Plot Date: 12-AUG-2011 16:26
User: thma
File: EMWD_S-1.dgn Model: Layout1 ColorTable: bw.ctb DesignScript: MWH_plot_PenTable_V89.pen PrintScale: 0.083333:1

User: thma Plot Date: 12-AUG-2011 16:27
File: EMWD_S-8.dgn Model: Layout1 ColorTable: bw.ctb DesignScript: MWH_Iplot_PenTable_V08.pen PlotScale: 0.083333:1

SHEET KEYNOTES

A. RRF BUILDING DESIGNED BY OTHERS
B. EQ BASIN W/ ROOF SEE S-2 & S-3
C. EQUIPMENT PAD PER S-191 AND SEE MECH DWG FOR SIZE & LOCATION
D. 1" JOINT W/ JOINT FILLER
E. #5 @ 12" EW T&B
F. 3-#6 T&B
G. 2-#6 EF
H. #4 CLOSED TIES @ 6" O/C
I. #5 @ 12"
J. FINISHED GRADE PER CIVIL DWG
K. ~~2" ALUM GRATING PER S-501~~

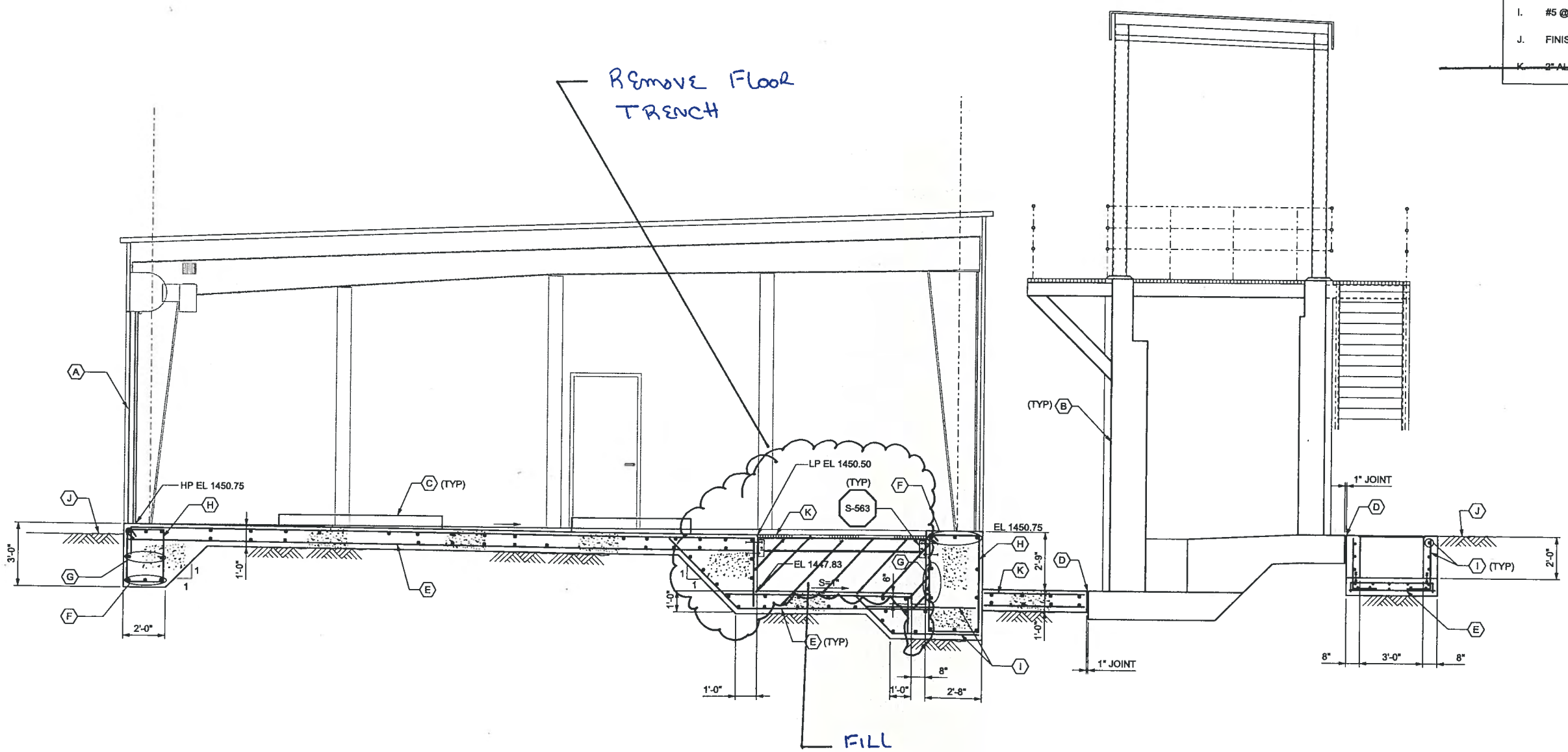

SECTION A / S-1

DESIGN DEVELOPMENT PHASE - 8/12/2011

NOT FOR CONSTRUCTION
This document is an interim document and not suitable for construction. As an interim document, it may contain data that is potentially inaccurate or incomplete and is not to be relied upon without the express written consent of the preparer.

WARNING
0 ½ 1
IF THIS BAR DOES NOT MEASURE 1" THEN DRAWING IS NOT TO SCALE

MWH®

NO.	DATE	INITIAL	REVISIONS DESCRIPTION	APP'D	DATE

APPROVED BY:
DIRECTOR OF ENGINEERING DATE
REFERENCES

EASTERN MUNICIPAL WATER DISTRICT
PROJECT MANAGER DATE

APPROVALS

	INITIAL	DATE
PROJECT ENG.		
INSPECTION		
WTR. OPERATIONS		

		DATE
DESIGNED	P NGUYEN	
DRAWN	T MA	
TRACED	N/A	
CHECKED	CHECKED	
SUBMITTED		

SCALE: 3/8"=1'-0"

EASTERN MUNICIPAL WATER DISTRICT

EASTERN MUNICIPAL WATER DISTRICT
RIVERSIDE COUNTY, CALIFORNIA
PERRIS WATER FILTRATION PLANT

RRF BUILDING
STRUCTURAL
SECTION A

I.D.	
S.A.	
W.O.	
C.O	
COORD.	
SHT.	OF XX

S-8

CH2M HILL - Project Estimate for VE

Project:	PWFP - Reject Recovery Facility	**Estimate Date:**	**8/24/2011**
Project No.:		**Midpoint of Construction:**	**Oct 2012**
Location:	Perris, CA	**Location Factor:**	**As Noted**
Proposal #:	14	**Estimate Prepared By:**	**Paiz**
Descr:	Put the valves and pipe above grade for easy access and eliminate the pipe trench in the building	**Estimate Reviewed By:**	**VE Team**

Spec Div	Description	Quan	Unit	Unit Cost	Loc Factor	Subtotal	Total	
	Delete original design:							
	Concrete	9	CY	$300	1.00	$2,700		Design estimate
	Aluminum grating and framing system	342	SF	$35	1.00	$11,970		
	Added costs:							
	Pipe supports	3	EA	$500	1.00	$1,500		Estimator's judgement
	subtotal						**16,170**	
	SUBTOTAL						**$16,170**	
	Add combined markups (see notes)	**50%**					**$8,085**	
	TOTAL CONSTRUCTION COST						**$25,000**	

Notes:
1) Breakdown for combined markups include the following:

Contractor Markups:	
Overhead	**10%**
Profit	**5%**
Mobilization, Bonds & Insurance	**7%**
Estimating Contingency	**20%**
Escalation Factor	**3%**
Market Conditions Factor	**5%**
Total combined markups	**50%**

Value Engineering Proposal No. 15

Date: August 24, 2011 Project Name: Perris WFP Reject Recovery VE Study

Proposal Description

Move the Reject Recovery Facility (RRF) north about 100 feet.

Initial Savings +	Future Savings =	Present Worth Savings
$(87,000)	$0	$(87,000)

Advantages	Disadvantages
Allows room for future routing in the corridor	Increases the amount of chemical and power systems to the RRF
	Will require new yard piping layout to be placed both below ground and above ground in multiple locations along the northern alignment

Discussion

Currently, Metropolitan Water District owns an easement on the northern property that restricts the use of placing buried utilities. The new route will depend on the location of existing buried pipeline and aboveground facilities.

Sketches

See attached.

Calculations

The original layout of yard piping is estimated to be 645 linear feet (LF)—measured from the south end of the RRF to the west side of the raw water pump station—for both the 6-inch RRF membrane concentrate pipe and the 12-inch RRF membrane permeate pipe. The estimated new alignment along the northern property limits is 380 LF. This is a difference of 265 LF for each pipe.

Cost Estimate

See attached.

Assumptions

The VE Team assumed the northern pipe alignment will require 50 percent to be an abovegrade installation. The original southern alignment is 100 percent below grade.

Documentation

See Civil Yard Piping plan sheet C-3.

Conclusion

The additional cost to move this facility to the north is approximately $87,000. The cost benefit for future expansion for the 25-million-gallon-per-day facility was not calculated into this evaluation.

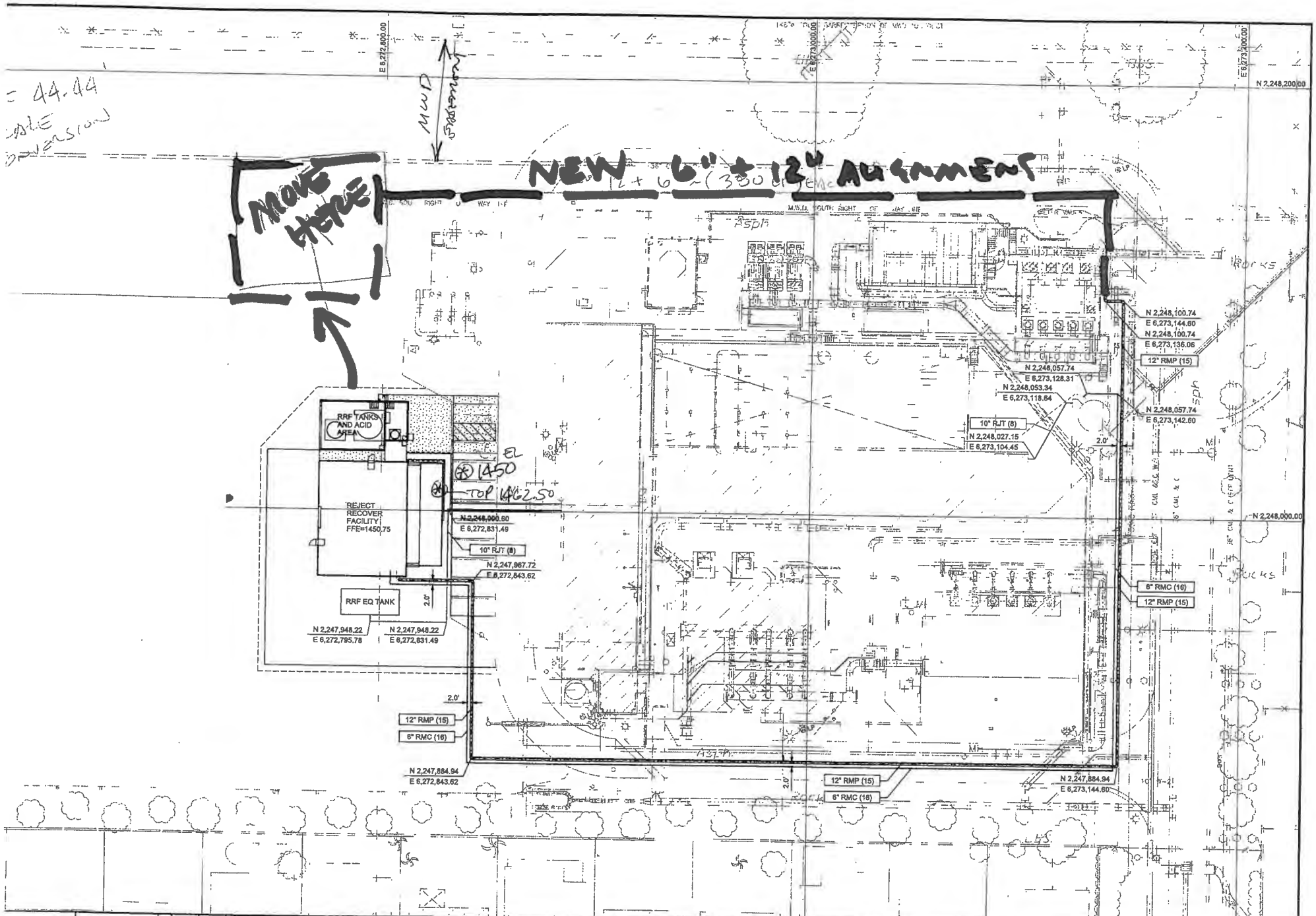

REVISIONS					
NO.	DATE	INITIAL	DESCRIPTION	APP'D	DATE

APPROVED BY:

DIRECTOR OF ENGINEERING DATE

REFERENCES

EASTERN MUNICIPAL WATER DISTRICT

PROJECT MANAGER DATE

APPROVALS

	INITIAL	DATE
PROJECT ENG.		
INSPECTION		
MTN. OPERATIONS		

	DATE
DESIGNED G BEHNKE	
DRAWN G BEHNKE	
TRACED N/A	
CHECKED CHECKED	
SUBMITTED	

SCALE: 1"=20'

EASTERN MUNICIPAL WATER DISTRICT

EASTERN MUNICIPAL WATER DISTRICT
RIVERSIDE COUNTY, CALIFORNIA
PERRIS WATER FILTRATION PLANT

CIVIL
YARD PIPING PLAN

I.D.	
S.A.	
W.O.	
C.O.	
COORD.	
SHT.	OF XX

C-3

CH2M HILL - Project Estimate for VE

Project:	PWFP - Reject Recovery Facility	**Estimate Date:**	**8/24/2011**
Project No.:		**Midpoint of Construction:**	**Oct 2012**
Location:	Perris, CA	**Location Factor:**	**As Noted**
Proposal #:	15	**Estimate Prepared By:**	**Paiz**
Descr:	Move the RRF north about 100 feet	**Estimate Reviewed By:**	**VE Team**

Spec Div	Description	Quan	Unit	Unit Cost	Loc Factor	Subtotal	Total
Proposed	**Proposed yard piping alignment to the north - 380 LF (assume 50% buried and 50% above ground)**						
	6" RMC - PVC - class 150 - C900 (incl trench ex & bckfill) *	**190**	**LF**	$17	1.00	$3,240	
	12" RMP - PVC - class 150 - C900 (incl trench ex & backfill)	**190**	**LF**	$35	1.00	$6,650	
	6" RMC - STL Sch 40 Weld Jts (incl hangers / supports) *	**190**	**LF**	**$79**	1.00	$14,915	
	12" RMC - STL Sch 40 Weld Jts (incl hangers / supports)	**190**	**LF**	**$192**	1.00	$36,480	
	Subtotal						**61,285**
	Allowance for pipe fittings	25%					**15,321**
	Subtotal						**$76,606**
	Add for additional power and chemical services	30%					**22,982**
	Total						**$99,587**
Original	**Original layout to the south - 645 LF alignment (assume 100% buried)**						
	6" RMC - PVC - class 150 - C900 (incl trench ex & bckfill)	**645**	**LF**	$17	1.00	$10,997	
	12" RMP - PVC - class 150 - C900 (incl trench ex & backfill)	**645**	**LF**	$35	1.00	$22,575	
	Subtotal						**$33,572**
	Allowance for pipe fittings	25%					**8,393**
	Total						$41,965
	Difference						**-57,622**
	SUBTOTAL						**-$57,622**
	Add combined markups (see notes)	**50%**					**-$28,811**
	TOTAL CONSTRUCTION COST						**-$87,000**

CH2MHILL

Value Engineering Proposal No. 16

Date: August 24, 2011 Project Name: Perris WFP Reject Recovery VE Study

Proposal Description

Eliminate the monorail and use a portable crane to remove the membranes.

Initial Savings +	Future Savings =	Present Worth Savings
$0*	$0	$0

* If a portable crane is purchased, then the cost is $25,000.

Advantages	Disadvantages
Will minimize the height for the RRF membrane tank facility	Will require Operations to schedule the use/rental of the portable crane
Will eliminate the maintenance cost for the monorail	

Discussion

The monorail is not expected to be used frequently. EMWD could purchase a portable crane for the cost of building the monorail and the crane could be used at other EMWD sites as well. The nearby parking lot would allow locating the crane right up to the facility and would minimize the reach for the crane.

The canopy above the membrane tanks is not needed because no equipment is installed at this location (on the side of the tanks, but not on top).

Sketches

See attached.

Calculations

N/A.

Cost Estimate

A savings of $0 would result if the $25,000 is used to purchase a portable crane. See the cost under "Monorail Hoist" in the cost estimate included in the PDR for the project.

Documentation

See attached download from the internet from Bigge Equipment Co. regarding the cost of a portable crane.

Conclusion

If the neighbors object to the height profile of the RRF membrane tank facility and Operations does not object to this proposal, the RRF Design Team may want to implement this proposal.

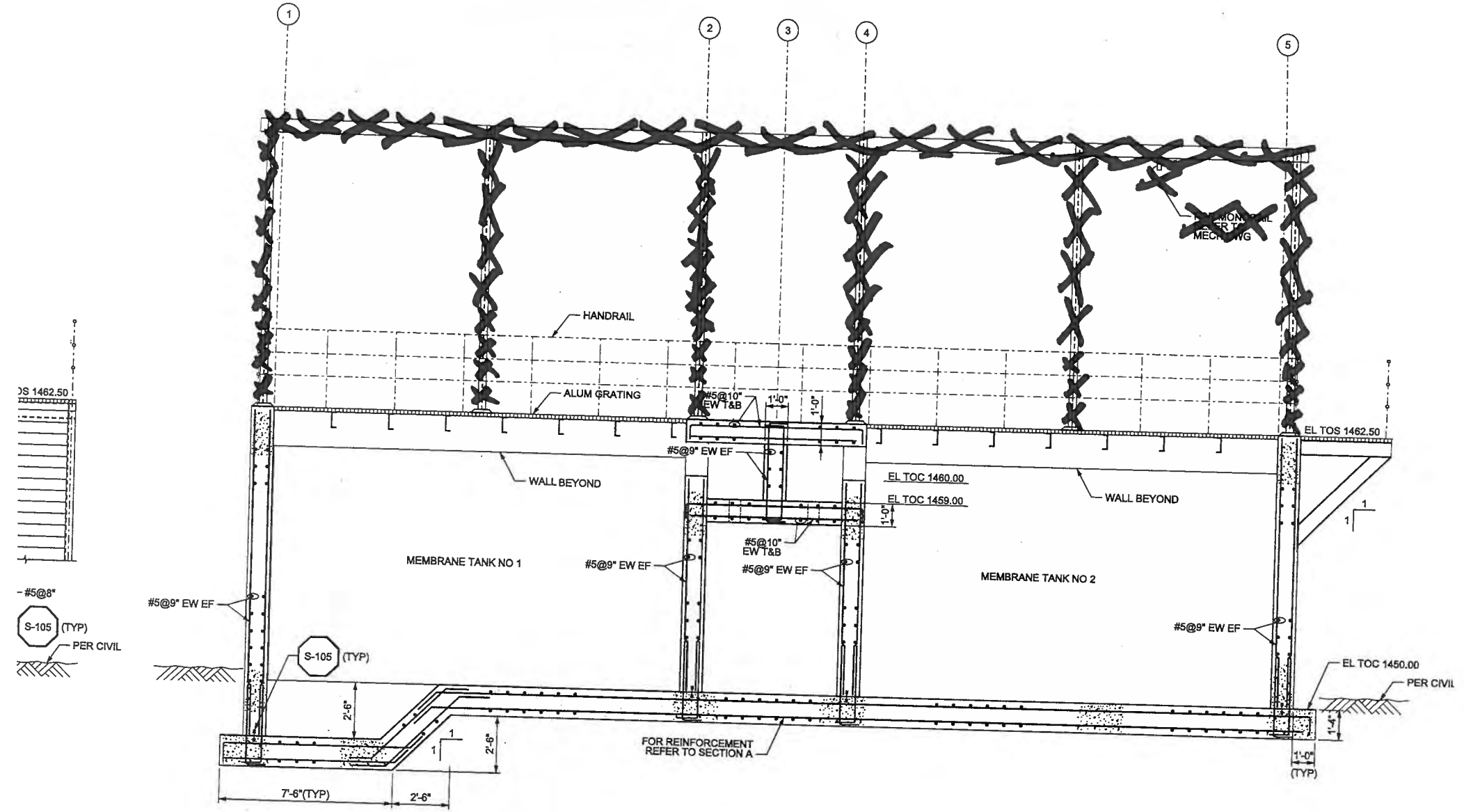
1
2
3
4
5
HANDRAIL
ALUM GRATING
#5@10" EW T&B
1'-0"
1'-0"
#5@9" EW EF
EL TOS 1462.50
WALL BEYOND
EL TOC 1460.00
EL TOC 1459.00
WALL BEYOND
1'-0"
#5@10" EW T&B
MEMBRANE TANK NO 1
#5@9" EW EF
#5@9" EW EF
MEMBRANE TANK NO 2
#5@9" EW EF
#5@9" EW EF
S-105 (TYP)
PER CIVIL
EL TOC 1450.00
PER CIVIL
2'-6"
1
1
2'-6"
FOR REINFORCEMENT REFER TO SECTION A
1'-4"
1'-0" (TYP)
7'-6"(TYP)
2'-6"
#5@8"
S-105 (TYP)
PER CIVIL

SECTION B
S-3

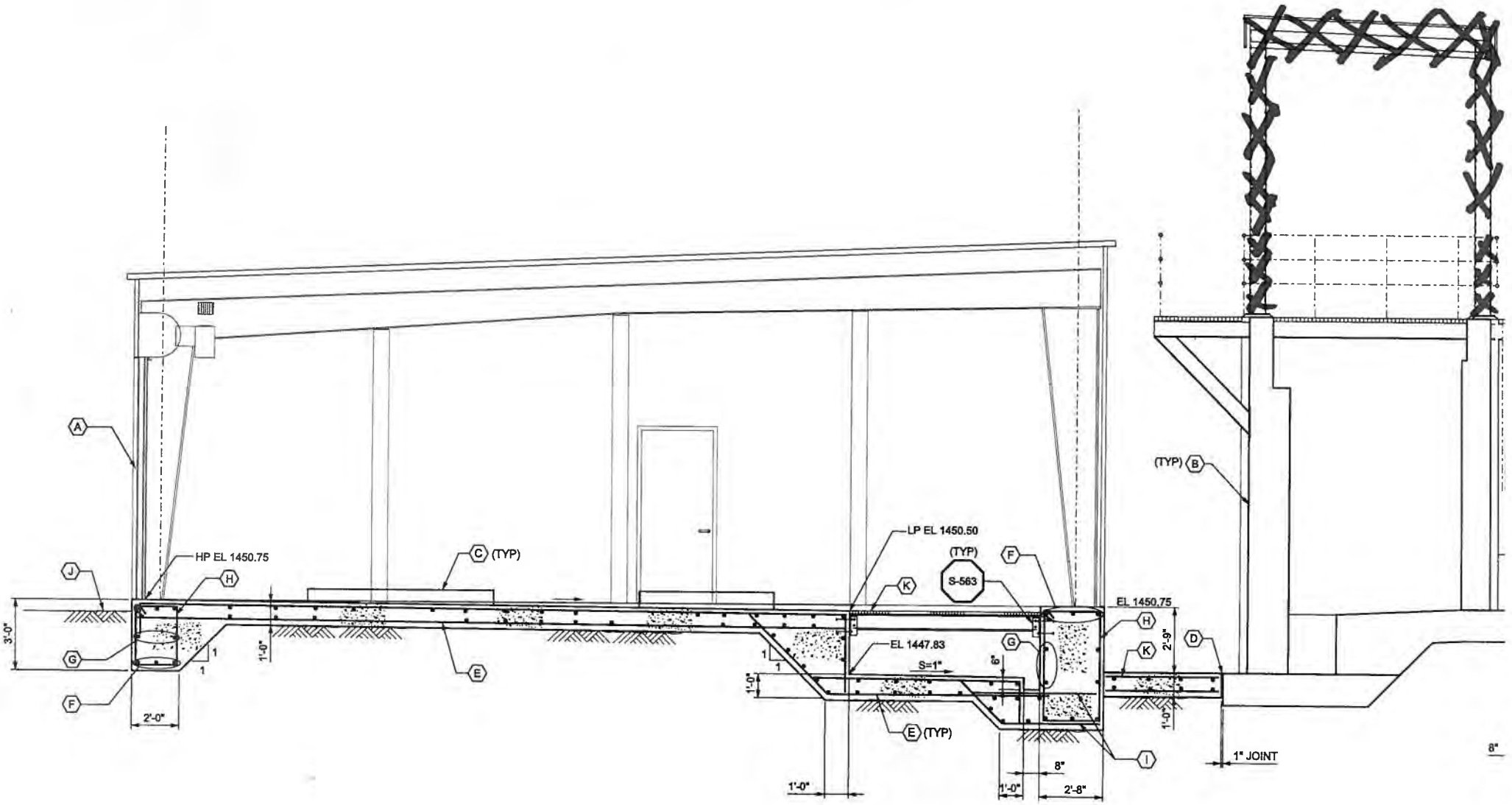

SECTION A
S-1

DPMENT PHASE - 8/12/2011

R CONSTRUCTION
terim document and not suitable for
terim document, it may contain data
urate or incomplete and is not to be
xpress written consent of the preparer.

REVISIONS					
NO.	DATE	INITIAL	DESCRIPTION	APP'D	DATE

APPROVED BY:

DIRECTOR OF ENGINEERING DATE

EASTERN MUNICIPAL WATER DISTRICT

		DATE
DESIGNED	P NGUYEN	
DRAWN	T MA	
TRACED	N/A	

A Tradition of Excellence
(888) 337-2444

Home | Equipment Sales | Crane Rental | Heavy Rigging | Heavy Transportation | Crane Charts | Crane Information | Contact Us

Select Language

Authorized dealer of...

Bigge Search

Cranes
- Rough Terrain Cranes
- Hydraulic Truck Cranes
- Tower Cranes
- Crawler Cranes
- All Terrain Cranes
- Gantry, Strand Jack & Hoist Systems
- Platform Trailers
- Aerial Lifts and Reach Forklifts
- Boom and Jib Accessories
- Tractors & Trucks
- Parts & Services
- Emission Control Systems

Choose by Manufacturer
- American
- Demag
- Grove
- Kobelco
- Liebherr
- Link-Belt
- Manitowoc
- Tadano
- Terex

BIGGE EQUIPMENT CO.
Chat now with a Bigge representative
Yes, let's chat
No Thanks X

Crane Sales > Used Boom Trucks & Carry Decks

Click the header row to sort by category

Year	Mfg/Model	Cap.	Boom	Fixed Jib	Type	Price	Thumbnail
2000	Manitex 30100	30	100	55	BOOM TRUCKS & CARRY DECKS	$120,000	
		23	92		BOOM TRUCKS & CARRY DECKS	$120,000	
		17	70		BOOM TRUCKS & CARRY DECKS	$70,000	VIDEO AVAILABLE
2001	Shuttlelift 3340	9	32	10	BOOM TRUCKS & CARRY DECKS	$45,000	
1989	Grove AP308	8	24	15	BOOM TRUCKS & CARRY DECKS	$20,000	
1999	Broderson IC80	8	42	10	BOOM TRUCKS & CARRY DECKS	$25,000	

Like Bigge on Facebook | Follow Bigge on Twitter | Bigge Newsletter Enter email address Sign up

For International Crane Sales and Nationwide Crane Rental call (1-888-337-BIGGE). Site Map | Career Opportunities

Copyright © 2011 Bigge Crane and Rigging Co. All Rights Reserved. Terms of Use.

SECTION 4

Notes to Designer

4.1 Summary

This section includes recommendations for the MWH Design Team that the VE Team discussed during the brainstormed ideas phase of the VE study but did not evaluate and develop into full proposals.

4.1.1 Locate GE Package Control System control panels within air-conditioned environment and specify additional environmental controls

The GE Package Control System and MWH Preliminary Design Drawings do not identify the location of GE Package Control System Panels CP-01, CP-11, and CP-12.

The GE Package Control System control panels incorporate sensitive electronic equipment (UPS, PLC processors, network switches, power supplies, communication modules, and PLC input-output modules) without environmental controls (i.e., moisture mitigation using a panel-mounted space heater or heat removal using panel sizing, ventilation, or closed loop air conditioning).

The VE Team suggests the GE Package Control System Main Control Panel CP-01 should be located within an air-conditioned environment or the supplier should be required to provide an enclosure with closed loop air conditioning. The Package Control System supplier should be required to submit for review heat generation and cooling requirements for package system control panels.

The supplier should submit for review heat generation and cooling requirements for remote input/output control panels CP-11 and CP12 to determine cooling and heating requirements for the control panel installed within ventilated (non-air-conditioned) locations.

4.1.2 Does the existing facility have an adequate amount of sodium hydroxide?

The PWFP has two onsite sodium hypochlorite generators (one duty and one standby), each with a 1,000-pound-per-day capacity. If not yet verified, the ability of the existing equipment to supply the new demands should be checked.

4.1.3 Increase the minimum flow set point for the reject recovery facility; the .1 mgd flow rate is too low for the minimum; discharge into the sewer instead

The VE Team suggests the Design Team look at the cost of operating the RRF at 0.1 mgd because the cost of operation may not justify the amount of recovered water (0.1 x 85 percent = 0.085 mgd = 59 gallons per minute).

4.1.4 Address Motor Control Center (MCC) Note 20 on page GE-3 (pad over the floor trench)

Note 20 on the MWH Preliminary Design Drawing GE-3 identifies the installation of a housekeeping pad with embedded level channels for MCCs and free-standing panels. This note may not apply to MCC-RRF, which is proposed to be located within an existing control room and adjacent to an existing floor trench.

4.1.5 Use coating on pipe instead of cathodic protection to protect the existing pipe without corrosion protection

The existing buried piping is coated for corrosion protection and adding cathodic protection could compromise the existing buried piping.

4.1.6 Consider induction lighting rather than high pressure sodium in the RRF; add skylights to the roof and translucent panels

The VE Team suggests the Design Team consider as part of the RRF project's architectural and electrical lighting design the following applications:

- Install skylights and translucent panels for the purpose of using natural lighting during daylight hours, instead of manufactured lighting, providing lower energy consumption and reduced operating costs
- Install induction lighting for the purpose of providing lower energy consumption and reduced operating costs

Note: Reference California Energy Code, or Title 24, Part 6 of the California Code of Regulations, addressing reduced energy consumption and equipment efficiency requirements.

4.1.7 Coordinate GE Package Control System panel drawings and MWH design drawings

The GE Package Control System electrical drawings identify the Main Control Panel with a CP-01 designation and remote input/output control panels with CP-11 and CP-12 designation.

MWD's Instrumentation Existing System Block Diagram identifies GE Package Control System control panels with LCP-130, PLC-130, LCP-114, and LCP-132 designations.

The panel schedule on MWH Electrical Panelboard and Luminaire Schedules Drawing E-8 identifies branch circuits for control panels CP-01, CP-11, and CP-12.

The GE Package Control System and MWD Preliminary Design Drawings do not identify the location of GE Package Control System panels.

4.1.8 Provide reduced voltage solid state (RVSS) motor control for 50-horsepower (hp) motors; consider using variable frequency drives (VFDs) on motors greater than 20 hp to qualify for Southern California Edison grant benefits

The MWH Electrical Single-Line Diagram 1 identifies the installation of full-voltage non-reversing motor starters as operating two 50-hp blowers. EMWD standards identify the use of VFDs or RVSS motor control for motors rated 25 hp and greater. MWH should consider providing RVSS motor control for 50 hp constant speed motor blower applications.

4.1.9 Coordinate GE Package Control System documentation and bill of materials with EMWD standard equipment and materials

The GE Package Control System package identifies the installation of HACH C17 chorine residual analyzers. Appendix B within the Basis of Design Report identifies Rosemount Analytical as EMWD standard equipment and materials for chlorine residual monitoring.

The GE Package Control System package 200515-GB-01 identifies the installation of Eaton Cutler Hammer SVX9000 drives. Appendix B within the Basis of Design Report identifies Toshiba as EMWD standard equipment and materials for VFDs.

The VE Team suggests removing from the package system reference to non-EMWD standard equipment.

4.1.10 Incorporate digital power meter (DPM) within MCC-RRF to support SCADA monitoring of RFF Package Control System power usage

Incorporate within MCC-RFF the installation of an Allen-Bradley Power Monitor 3000 (or equal) to support SCADA monitoring Package Control System power usage. A digital power meter would be specified to incorporate an ethernet IP communication module to support interface with the plant's SCADA. SCADA would be programmed to display, collect and log, and trend the following type of power data in support of monitoring package system operation, power demand versus flow rates, cycle times, and overall efficiency:

- Volts
- Kilowatts
- Kilowatts hours
- Power factor
- Kilowatt demand with time interval
- Kilovolt-ampere
- Kilovolt-ampere reactive

4.1.11 Consider adding circulation piping to the CIP tank; it is not shown on the process and instrumentation diagram

The piping isometric shows piping to/from the CIP tank, but with only one connection at the membrane tank for both. If the purpose is to recirculate the fluid, the existing configuration won't allow it.

4.1.12 Consider the installation of energy efficient 208Y/120-volt (V) three-phase 30-kilovolt ampere (kVA) lighting transformer in lieu of 120/240V single-phase 30kVA lighting transformer XFMR-1

The MWH Electrical Signal Line Diagram -1 Drawing E-2 identifies the installation of a 30-kVA, single-phase lighting transformer and powered from a 50AT (protective device ampere trip)/100AF (protective device ampere frame) feed breaker located in MCC-RRF. The 50AT/100AF breaker would be too small for a 30-kVA, single-phase transformer. A 30-kVA, single-phase transformer is a non-standard application.

The installation of a 30-kVA three-phase transformer would be consistent with existing power distribution equipment, standards, and support-balanced three-phase loading on a new MCC-RRF. The installation of an energy-efficient transformer supports lower energy consumption and reduced costs.

Note: Reference California Energy Code, or Title 24, Part 6 of the California Code of Regulations, addressing reduced energy consumption and equipment efficiency requirements.

4.1.13 Coordinate GE Package Control System PLC wiring diagrams with MWH design drawings

The MHW Electrical Control Schematics I and II identify the following: remote, fail, run, and start/stop the interface between the MCC and Package Control System PLC.

The GE Package Control System submittal drawings do not identify input connections for several applications, including but not limited to, the following:

- Discrete Input: Second Stage Feed Pump (20-P-101-01, 20-P-101-02) VFD fail status missing
- Discrete Input: Process Pumps (20-P-201-01, 20-P-201-02) VFD fail status missing
- Discrete Input: Reject Pump (20-P-901-01, 20-P-901-02) VFD fail status missing
- Discrete Input: CIP Pump (20-P-701-01, 20-P-701-02) VFD fail status missing
- Discrete Input: Blower (20-B-201-01, 20-B-201-02) VFD fail status missing
- And etc.

The MHW Electrical Control Schematic III identifies the following: remote, opened, closed, and open/close interface between the flow control valves and Package Control System PLC.

The GE Package Control System submittal drawings do not identify input and output connections for several applications, including but not limited to, the following:

- Discrete Input: Flow Control Valves (20-FV-713 through 20-FV-716) missing open and close indications
- Discrete Input: Flow Control Valves (20-FV-101-1 through 20-FV-103-1) missing open and close indications

- Discrete Output: Flow Control Valves (20-FV-210-1 through 20-FV-212-1) missing open and close indications
- And etc. for each process train
- Discrete Output: Flow Control Valves (20-FV-713 through 20-FV-716) missing either open or close relay interface
- Discrete Output: Flow Control Valves (20-FV-101-1 through 20-FV-103-1) missing either open or close relay interface
- Discrete Output: Flow Control Valves (20-FV-210-1 through 20-FV-212-1) missing either open or close relay interface
- And etc. for each process train

The VE Team suggests the Design Team confirm with EMWD if signal isolators are required for analog 4-20mA loops passing between buildings and/or between control panels (i.e., VFDs and PLC enclosures).

The GE Package Control System Drawing 2000515-GB-01 identifies shielding for a 4-20mA loop as being grounded at the drives. Unless signal isolators are installed, signal shielding should be grounded in one location (normatively at DC source).

4.1.14 Coordinate with EMWD conduit requirements prior to writing specifications

The VE Team suggests the Design Team coordinate with EMWD requirements for conduit types within various environmental conditions, including polyvinyl chloride (PVC)-coated aluminum in lieu of PLC-coated RGS in wet and corrosive locations.

Note: Consider the installation of spare conduits and pull boxes to support the routing of power, controls, and signal from the existing Control Building as part of future plant expansions.

4.1.15 Provide corrosion protection on all metals in the head space of the membrane tanks

The aluminum grating shown on top of the membrane tanks should be changed to solid covers. Because the system will operate in feed/bleed mode, the head space in the membrane tanks will be a corrosive environment (chlorine vapors). Therefore, the solid covers as well as the component in the head space of the membrane tanks need to have corrosion protection or the membrane head space needs to be properly ventilated to remove the fumes.

APPENDIX A

List of Background Materials Available to the VE Team

APPENDIX A

Background Materials Available to the VE Team

The following documents regarding the Perris Water Filtration Plant Reject Recovery Facility Project were made available to the VE Team by the MWH Design Team:

Preliminary Design Development Drawings. August 2011.

Draft Preliminary Design Report. June 2011.

CD containing GE 60 percent and 90 percent submittals.

APPENDIX B

Owner's Response to VE Proposals

Proposal No.	Description	VE Potential Life-cycle Cost Savings	MWH Estimated Life-cycle Cost Savings	MWH Remarks/Response	Design Impact	Design Schedule Impact	Owner's Response to VE Proposals
1	Use the existing clean-in-place neutralization tank instead of adding a new one at the Reject Recovery Facility (RRF)	$108,000	~$ 100,000 (see attached alternate design)	• **Not recommended** • Volume and water quality will vary between 1st and RRF (2nd) CIP neutralization waste. Control systems will be complicated and modifications will be necessary. • Using the existing CIP neutralization tank will disrupt the existing operations. Below are the 2nd stage Neutralization requirements: o Twice daily the 2nd stage needs the neutralization tank o For each event the minimum volume to be neutralized will be ~7000 gal o Each event could either be from a maintenance clean or a recovery clean o Neutralization system must be able to reliably neutralize waste solutions (50mg/L-1000mg/L of hypochlorite and pH from 2 – 5 for acid cleans) • Alternative proposal as attached: o The space between the membrane tanks will be used for both overflow and CIP neutralization tank. o The membrane tank sumps will drain by gravity into a CIP waste pump wetwell. o Two CIP waste submersible pumps (1 duty + 1 standby) will be provided ▪ To transfer CIP waste from wet well to neutralization tank ▪ As CIP recirculation pumps ▪ To transfer neutralized waste CIP to existing reject equalization tank for disposal	Yes	Yes	Concurred with MWH's recommendation.

Proposal No.	Description	VE Potential Life-cycle Cost Savings	MWH Estimated Life-cycle Cost Savings	MWH Remarks/Response	Design Impact, of VE Proposal	Design Schedule Impact of VE Proposal	Owner's Response to VE Proposals
2	Use a plastic tank for the equalization with end suction centrifugal fee pumps rather than concrete and submersibles	$10,750	$10,000	• **Not recommended** • Savings are from future energy costs. Capital cost is higher for plastic tank. • The RRF EQ tank is the most southern structure, closest to neighbors. • A concrete tank is more aesthetically pleasing to the neighbors than the plastic tank. • Noise could be an issue if end suction centrifugal pumps are used.	Yes	Yes	Concurred with MWH's recommendation.
3	Use shelf spares for the blowers and compressors and clean-in-place (CIP) pump and not be redundant	$120,000	$10,000	• **Not recommended** • Proposal's intention was to avoid building expansion to accommodate the electrical panels. The existing layout includes space for panels and the building does not require further expansion. • Concern is that RRF may be out of service for more than one week. • Bearings tend not to last when stored.	No	No	Concurred with MWH's recommendation.
4	Eliminate the overflow structure on the membrane tanks and replace with pipe	$10,000	($20,000)	• **Not recommended** • Eliminates tank top landing area for cassette. • No containment of overflow volume will be available if not provided. • If the overflow weir is replaced with pipe, the depth of the membrane tank will be increased by 1-2 feet, aggravating the issue with the membrane tanks and canopy being the tallest structure in the facility.	Yes	Yes	Concurred with MWH's recommendation.

Proposal No.	Description	VE Potential Life-cycle Cost Savings	MWH Estimated Life-cycle Cost Savings	MWH Remarks/Response	Design Impact	Design Schedule Impact	Owner's Response to VE Proposals
5	Use rotary lobe pumps (Vogelsang) for permeate/backpulse	($25,000)	($25,000)	• **Not recommended** • Neither rotary lobe nor centrifugal pump will work with a membrane tank buried 6 ft below grade and the pumps are left at grade. • If centrifugal pumps are used, the permeate pump must be at the same elevation with the bottom of the membrane tank (i.e. the shallow end). Pumps will have to be lowered if membrane tanks are buried. • If rotary lobe (PD) pumps are used, the membrane tanks can be buried up to 3-4 feet deeper than the current design. If the membrane tanks are buried more, the pumps will have to be lowered too. • Rotary lobe pumps have higher horsepower, higher cost and greater vibration than centrifugal pumps. • Rotary lobe pumps currently do not have NSF 61 certification.	Yes	Yes	Concurred with MWH's recommendation.
6	Use the existing back pulse tank to back pulse the membranes	$65,000	($5,000)	• **Not recommended.** • Suction conditions will not work for the proposed pumps. • Existing pumps are too large, and would require modifications and could cause disruption to existing operations. • Proposal's intention was to reduce building size. Canopy size is controlled by the size of the CIP tank. This proposal will not reduce building size.	Yes	Yes	Concurred with MWH's recommendation.
7	Eliminate the hydrochloric acid and use citric acid	$67,000	$5,000	• **Not recommended** • Operations confirmed that citric acid can be used to bring pH to 2.3. • Hydrochloric acid will be used as backup to citric acid for acid cleans	No	Yes	Concurred with MWH's recommendation.

Proposal No.	Description	VE Potential Life-cycle Cost Savings	MWH Estimated Life-cycle Cost Savings	MWH Remarks/Response	Design Impact	Design Schedule Impact	Owner's Response to VE Proposals
8	Reduce conservatism in membrane design; eliminate third cassette/reduce tank size (existing final subgroup operating at 12 gallons per square foot per day)	$13,000	$20,000	• **Not recommended** • Based on past discussion with GE, GE will only guarantee 0.9 mgd if two cassettes are provided instead of three. The 3rd cassette is to provide redundancy as well as for future expansion. • GE confirmed that there is no available pre-engineered design of the dummy cassette for the 500d cassettes.	Yes	Yes	Concurred with MWH's recommendation.
9	Why is GE not proposing the low energy aeration process?	$180,000	N/A	• **Not available** • LEAP aeration technology is currently available for MBRs only. • Currently it is not available for drinking water applications (certification and reliability testing have not been completed).	N/A	N/A	Concurred with MWH's recommendation.
10	Eliminate the redundant programmable logic controller (PLC)	$34,000	$34,000	• **Recommended** • Agree with VE's recommendation since the RRF will not be a critical facility.	No	No	Concurred with MWH's recommendation.
11	Use more standard kilo-amperes interrupting capacity (kAIC)-rated motor control center (MCC) if supported by documentation	$36,000	$36,000	• **Recommended** • EMWD confirmed that the MCC shall be 65 KAIC as with the existing electrical equipment.	Yes	Yes	Concurred with MWH's recommendation.
12	Use common feed fuse disconnect for valves	$32,000	$32,000	• **Recommended**	Yes	No	Concurred with MWH's recommendation.
13	Remove the cover superstructure and only extend the cover over the valves between the buildings	$29,000	$29,000	• **Not recommended** • Operations needs shade while working on the cassettes. • Covers may become too hot to stand on without shade.	No	No	Concurred with MWH's recommendation.
14	Put the valves and pipe above grade for easy access and eliminate the pipe trench in the building	$25,000	~$0	• **Not recommended** • Trench is for piping only. • Valves are already above trench for easy access. • Trench allows much better access for operations and maintenance. • Trench drainage sump is provided in design. • Additional costs (and space) for pipe supports.	Yes	Yes	Concurred with MWH's recommendation.

Proposal No.	Description	VE Potential Life-cycle Cost Savings	MWH Estimated Life-cycle Cost Savings	MWH Remarks/Response	Design Impact	Design Schedule Impact	Owner's Response to VE Proposals
15	Move the RRF north about 100 feet	($87,000)	($87,000)	• **Not recommended** • The current layout does not interfere with the future expansion. • Piping becomes longer with more headlosses, without encroaching into MWD easement.	Yes	Yes	Concurred with MWH's recommendation.
16	Eliminate the monorail and use a portable crane to remove the membranes (make covers out of fiberglass)	$0	$0	• **Not recommended** • The sludged weight of one 500d cassette is 5 tons. • Operators with special certification are required to operate the portable crane.	No	No	Concurred with MWH's recommendation.

MWH

By PCL Date 9/30/2011 Client EMWD. Sheet 4 of 6

Chkd. By J. BORCHARDT Description OPTION 2 - LOWER PLAN Job No. 1008058

- ENLARGED OVERFLOW STRUCTURE TANKS BY MEMBRANE TANK 1
- SERVES AS CIP NEUTRALIZATION/DISPOSE TANK.

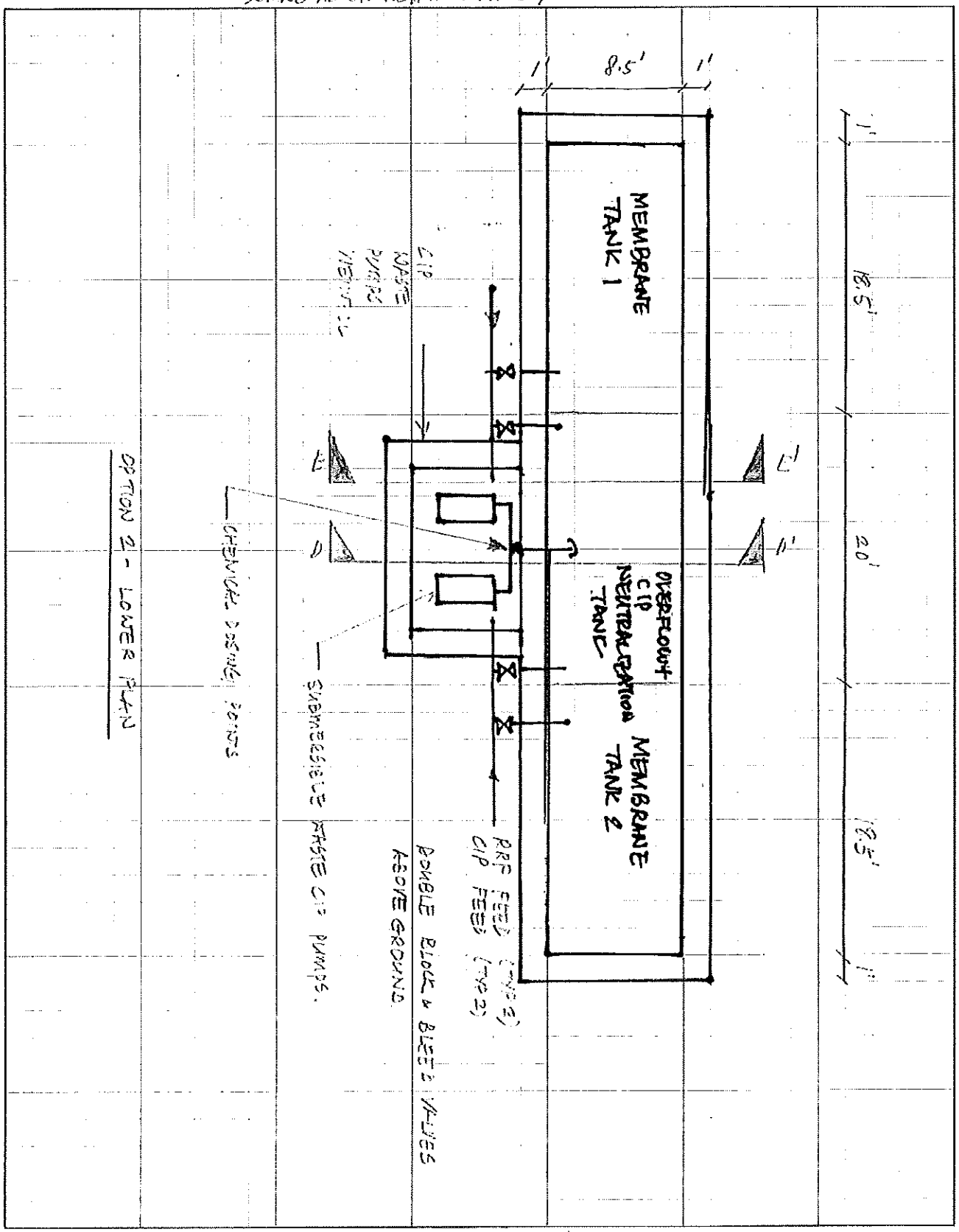

VE PROPOSAL #1
MODIFIED DESIGN
PER OCT 11, 2011 CONFERENCE CALL

MWH

By PCL Date 9/30/2011 Client EMWD Sheet 5 of 6

Chkd. By J.B. Description OPTION 2 SECTION Job No. 1008058

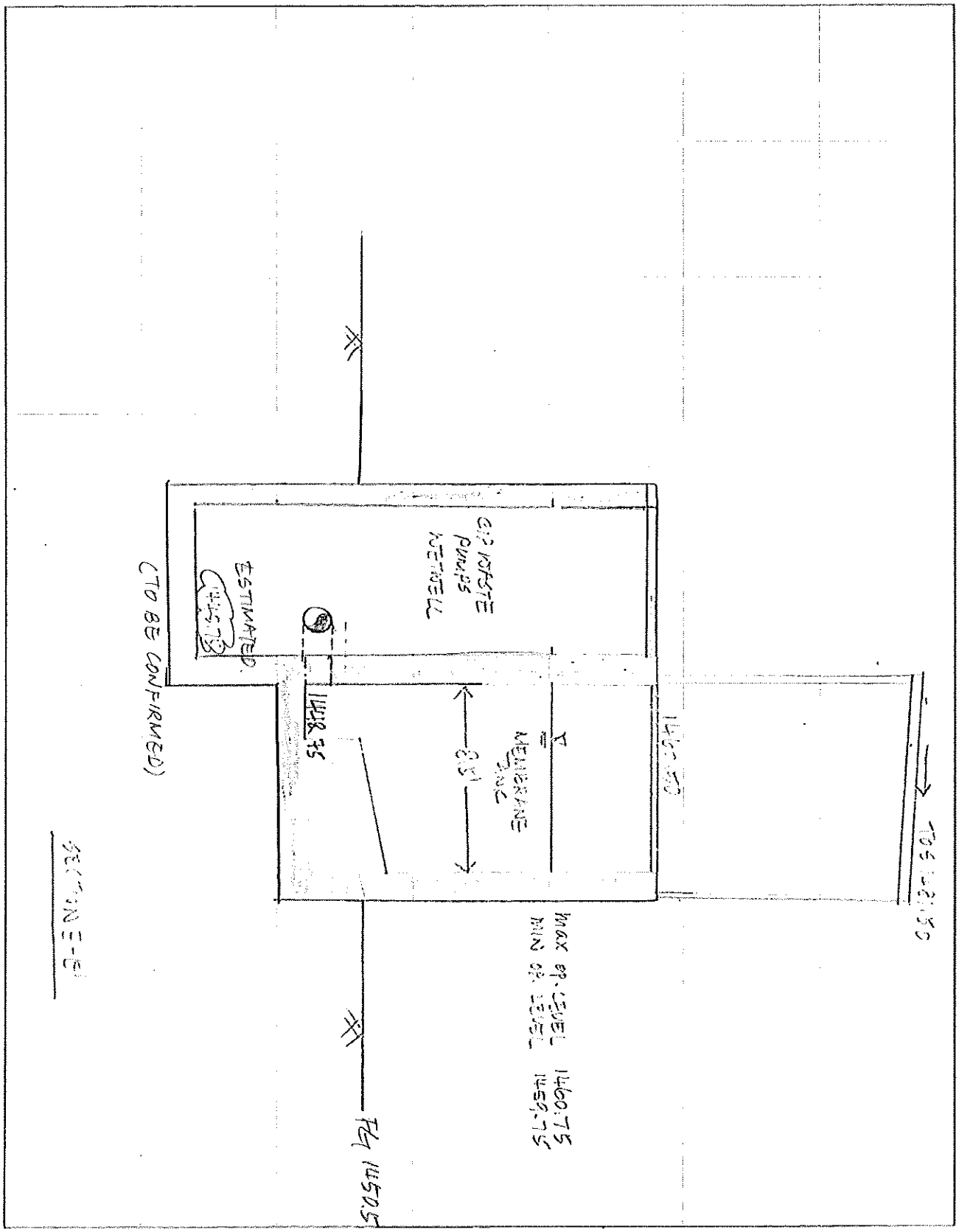

MWH

By PCL Date 9/30/2011 Client ENSO (RRF) Sheet 6 of 6

Chkd. By J.B. Description OPTION 2 - SECTION DD' Job No. 1008058

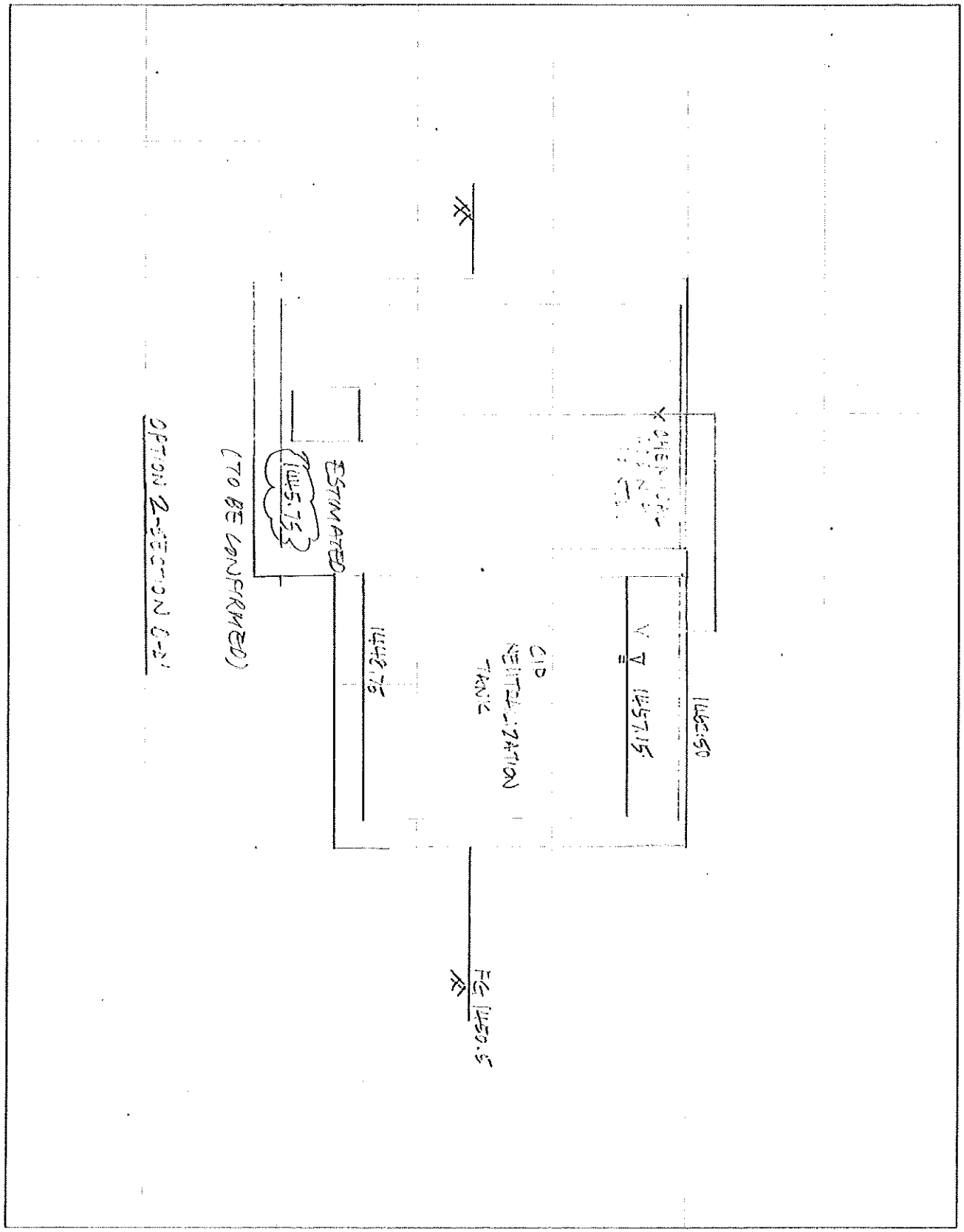

MODIFIED DESIGN
PER OCT 11, 2011 CONFERENCE CALL

Appendix 1-A

CDPH letter dated March 8, 2011

State of California—Health and Human Services Agency
California Department of Public Health

Howard Backer, MD, MPH
Interim Director

ARNOLD SCHWARZENEGGER
Governor

March 8, 2011

Jayne Joy, P.E.
Director Environmental and Regulatory Compliance
Eastern Municipal Water District
P.O. Box 8300
Perris, CA 92572-8300

Dear Ms. Joy:

**EASTERN MUNICIPAL WATER DISTRICT (EMWD), SYSTEM NO. 3310009
REJECT RECOVERY FACILITY AT THE PERRIS WATER FILTRATION PLANT –
COMMENTS ON THE CONCEPTUAL DESIGN APPROACH**

The Department has reviewed your letter dated June 16, 2010 presenting EMWD's revised conceptual design approach for the proposed reject recovery treatment facility at the Perris Water Filtration Plant (PWFP). The original reject recovery concept was previously accepted by the Department in our October 24, 2008 letter. The revised approach as described in your June 16, 2010 letter is a significant departure from the original concept, in that the treated reject water would not be sent to the headworks of the PWFP, but would instead bypass the filtration treatment at the PWFP.

The Department has considered the revised proposal and does not support the design concept as proposed in the letter and illustrated by Figure 2 in the letter, for these reasons:

1. The Department considers reject water to be equivalent to backwash water in character and quality, and the District office is upholding the surface water treatment design standard that all recycle flows must be treated for solids removal and returned to the headworks of the treatment plant.

2. The letter suggests that the reject water could have peak turbidity values in the range up to 70 NTU. The high expected reject water turbidity is due in part to the high recovery rate of 98% under which the membranes are being operated. Please note that the original demonstration reports submitted for the Zenon 500 membranes were based on tests conducted using better source water quality and operating at lower recovery rates, and therefore the Department does not have data showing the reliability of the membranes when operating under the proposed conditions. The Department may however consider the proposal in the future if a demonstration study is conducted and additional information is submitted for review by District office and the Water Treatment Committee. If

EMWD would like to undertake a demonstration study, it must first submit a study protocol to the Department for review and approval.

Any proposal to recycle the reject water generated from the ultrafiltration membrane treatment system at the Perris WFP must include the return of the treated reject water to the plant headworks. The design concept for a 3rd stage reject water treatment system as proposed in the letter and illustrated by Figure 3 in the letter is consistent with the above criteria and is therefore acceptable.

If you have any questions regarding this letter, please contact Jing Chao or me at (619) 525-4834.

Sincerely,

J. Steven Williams, P.E.
District Engineer

cc: Jamal Awad, MWH Americas, Inc., 175 W. Jackson Blvd., Suite 1900, Chicago, IL 60604-2814

Eugene Leung, Technical Programs Branch, CDPH County of Riverside,

Appendix 2-A

Membrane Selection Technical Memorandum (TM)

(See CD for TM Appendices)

TECHNICAL MEMORANDUM

MWH

BUILDING A BETTER WORLD

To:	Greg Kowalski, P.E. Jeff Allred, P.E.	**Date:**	November 22, 2010
From:	Jim Borchardt, P.E. Pei-Chin Low, P.E. Karla Kinser, P.E. Stephanie Sansom, P.E.	**Reference:**	Eastern Municipal Water District Perris Water Filtration Plant Reject Recovery Facility

Subject: Membrane Selection Technical Memorandum (TM)

As part of the design of the Eastern Municipal Water District (District) Perris Water Filtration Plant Reject Recovery Facility (PWFP RRF), a Request for Proposal (RFP) for the procurement of a Microfiltration/Ultrafiltration System Supplier (MFSS) was prepared and issued. This technical memorandum (TM) summarizes the information, discussions during workshops and recommendations during the procurement process, and includes the following sections:

- Pre-qualification;
- Request for Proposal;
- Bidding Results; and
- Recommendations.

PRE-QUALIFICATION

The District prequalified suppliers/manufacturers for the design of the PWFP RRF Microfiltration/Ultrafiltration (MF/UF) membrane system to expedite the membrane system procurement process. Pre-qualification letters were sent to eleven (11) membrane system manufacturers/suppliers on January 20, 2010. The pre-qualification of MFSS was based on the response to the formal questionnaire that was included as an attachment to the pre-qualification letter. The suppliers/manufacturers were requested to submit the following information by January 29, 2010:

- Years of membrane experience;
- Type of membrane system proposed (submerged/pressurized);
- Experience with design and operation of membrane projects to treat reject (backwash) water;

- Experience with operation of similar membrane plants;
- Location of service centers;
- Standard integrity monitoring method;
- Location of manufacturing facilities and annual production capacity; and
- Location of research and development center.

Summary of Responses

Six (6) manufacturers/suppliers provided responses to the questionnaire, four (4) manufacturers/suppliers declined to submit a response to the questionnaire, and one (1) manufacturer/supplier did not respond to the request for information. The responses from the suppliers/manufacturers are summarized in **Table 1**.

Table 1
Summary of Responses to Pre-Qualification Letter

Supplier/ Manufacturer	DOW	GE/Zenon	KCM	Kruger/ Norit	Pall	Toray
Design and Operational Experience with Reject (Backwash)	Shangxi, China	Olivenhain, CA	None	Inverness, UK	Yucaipa, CA	Hyogo, Japan
Satisfactory data provided?	Yes	Yes	No	Yes	Yes	No
Membrane Model Proposed	SFP-2860	ZeeWeed 500d	KCM 091009	SXL225	Aria/ Microzoa	LSU-1515
Service Centers in the US	Yes	Yes	Yes	Yes	Yes	Yes
Adequate Manufacturing Capacity	Yes	Yes	Yes	Yes	Yes	Yes
Research and Development Facility	Yes	Yes	Yes	Yes	Yes	Yes

1. Dow = Dow Water and Process Solutions
2. GE/Zenon = GE Water and Process Technologies
3. KCM = I Kruger Inc. – Ceramic Membrane
4. Kruger/Norit = I Kruger Inc. – Norit
5. Pall = Pall Corporation
6. Toray = Toray Membrane USA, Inc.

The summary of responses was reviewed during the February 11, 2010 workshop and it was agreed that Toray did not provide satisfactory data and was therefore not pre-qualified (see **Appendix A** for February 11, 2010 minutes). While Pall and Dow indicated experience in reject treatment and were pre-qualified for further evaluation, the information provided was incomplete and additional information was requested for further evaluation. Although KCM did not have the required experience in designing and operating reject systems, ceramic membranes are well-suited for high solids applications and KCM was pre-qualified for further evaluation (see **Appendix A** for March 5, 2010 minutes).

REQUEST FOR PROPOSAL

After the pre-qualification evaluation was completed, the RFP was issued to five suppliers (MFSSs). Sealed proposals were due on May 13, 2010, with all questions to be submitted in writing by May 6, 2010. The five pre-qualified suppliers included:

1. Dow
2. GE/Zenon
3. KCM – Kruger/Ceramic Membrane
4. Kruger/Norit
5. Pall

During the bid period, three responses to questions were issued (see **Appendix B** for a copy of the final RFP and the official Responses to Questions). The deadline for questions was extended to May 20, 2010 and the deadline for bid submittal was extended to May 27, 2010. H2O Innovations was also permitted, during the bid period, to submit a proposal using Dow membranes.

The RFP indicated that UF reject water and coagulant samples for both Colorado River Water and State Project Water would be made available to the MFSSs for bench scale testing. KCM, Kruger/Norit and Pall requested and received State Project Water reject and coagulant samples during the bid period. No MFSS requested for Colorado River Water reject sample when made available.

Commercial Requirements

During the development of the RFP, MWH worked with the District to review the existing front end specification documents. The District requested that their standard front end specifications be used, and agreed to modifications of the following sections:

- Indemnification;
- Limitation of Liability and Liquidated Damages;
- Indirect and Consequential Damages; and
- Defined and Implied Warranties.

In addition, MWH recommended that an additional clause be added to the RFP which states that if the contract between the District and the selected MFSS is not completed within 30 days of award, the District reserves the right to (1) mutually agree to extend the negotiation period, or (2) terminate negotiations and enter into negotiations with the next most qualified MFSS. The District agreed to include this clause.

Revisions were reviewed by Redwine and Sherrill, and included in the final RFP.

Technical Requirements

Each MFSS was required to submit information on equipment design, supply, delivery, review, checkout, startup testing, commissioning, training, and performance testing of the second and third stage MF/UF membrane systems, including support equipment, pumps, air systems, valves, instrumentation and control, and other accessories.

Relevant water quality data was included in the RFP. The RFP requested that the MFSS propose second and third stage MF/UF membrane systems to meet the following filtrate water quality requirements:

Table 2
Filtrate Water Quality Requirements

Parameter	Limit	Unit
Turbidity, Maximum	0.1[1]	NTU
Giardia Lamblia	>4	Log Reduction
Cryptosporidium	>4	Log Reduction

1. Minimum 95% success rate

The MFSS was required to meet 85% daily operating recovery at minimum design flow. The MFSS was to provide justification of their proposed maximum flux as described in Section 11400, Paragraph 1.3.C (**Appendix B**).

The MFSS was to incorporate the existing plant chemical storage tanks into their design and provide "value added engineering ideas" such as the reuse of existing on-site facilities and optimization of the facility layout. The MFSS was also required to fulfill membrane integrity testing requirements as described in USEPA's "Membrane Filtration Guidance Manual", November 2005 (USEPA Document 815-R-06-009). See Section 11400 of the RFP (**Appendix B**) for more details of the requirements.

Evaluation Criteria

The selection of a MFSS was based on an evaluation of cost and non-cost criteria to determine the best overall value to the District.

Cost Evaluation Criteria

The cost evaluation of the MFSS was based on the evaluation of Net Present Value (NPV). This evaluation included capital cost and warranties. The evaluated operation and maintenance present worth cost included chemical and power consumption. In order to conduct fair comparison of the bids, the RFP was specific in the definition of the input values and the equations used to develop cost information. Application of alternative methods would be considered non-responsive.

The total capital present worth cost includes:

- Capital cost of the total membrane system;

- Present value of the District's share of the 7-year extended membrane module warranty; and
- Non-warranty membrane replacement costs.

The total operation and maintenance present worth cost includes:

- Present worth for chemical usage (using a standard present worth factor);
- Present worth for power usage (using a standard present worth factor); and
- Cost of the performance and maintenance contract.

These numbers are added together to provide a total capital and operation and maintenance present worth cost. The calculation of these values is based upon the information provided by each bidder. Once the values are calculated for each bidder, these numbers can be directly compared, as they are based on the same project specific and economic assumptions (as provided in Section 00020 – Bidding Sheets).

Non-Cost Evaluation Criteria

The non-cost evaluation criteria and weighting as defined during the February 11, 2010 workshop is summarized in **Table 3**.

Table 3
Non Cost Evaluation Criteria

Non-Cost Evaluation Criteria	Weight
Compliance with Contract Terms	15
Technical Exceptions to Bid	20
Experience with Proposed Membrane on Reject Installations	20
Local Technical Support	10
Ease of Operation and Maintenance (O&M)	15
Footprint	10
Expandability	5
Constructability	5

BIDDING RESULTS

As discussed earlier, the RFP was issued to five MFSSs. Two MFSSs, GE/Zenon and H2O Innovation/Dow, submitted a proposal and three (3) MFSSs declined to bid. The reasons for no-bid are summarized in **Table 4**.

Table 4
Reasons for No-Bid

MFSS	Reasons for No-Bid
Kruger/Ceramic Membrane	• There is a lack of experience on reject installations. • Cannot estimate flux, power and chemical usage without pilot testing. • Cannot guarantee O&M costs. • Could not fit in required footprint. • Believe that the capital cost will be too high to be competitive.
Kruger/Norit	• Water quality (TSS) was too challenging based on range of water quality shown in RFP. • Conducted jar testing on the sample which did not provide adequate information. • Would have required a larger diameter fiber for this application and there are few installations with these membranes. •
Pall	• 3rd stage water quality was too aggressive for their hollow fiber membranes. • Requested pre-qualification of submerged and ceramic membranes during bid period, but these membranes were not submitted for prequalification, and therefore not eligible for consideration.

Upon review of the submitted proposals from H2O Innovation/Dow and GE/Zenon during the June 22, 2010 meeting, it was agreed that there were four (4) ways to move forward in response to the bids. The pros and cons/risks of each alternative are summarized in **Table 5**. During the same meeting it was agreed that Alternative 4 was most appropriate and requests were sent to both H2O Innovation/Dow and GE/Zenon for clarification and supplemental information.

Table 5
Alternatives Responding to Bids

Alternative		Pros	Cons/Risks
1	Select GE/Zenon and begin negotiations.	• Major supplier of membrane equipment. • Synergy between the operation and maintenance of the existing UF facility and the proposed reject facility. • No delay to schedule. • Exceptions taken in proposal appear negotiable. • Potential to reduce some costs. • Chemical usage remains consistent with one vendor. • MFSS Operation and maintenance visits for the existing and proposed plants can be combined.	• Cost is greater than 2009 estimate (~$1.6M vs. ~1M). • Some costs not accounted for (e.g. does not include sole source equipment).

Alternative		Pros	Cons/Risks
2	Select H2O Innovation / Dow and begin negotiations.	• No delay to schedule. • 2nd Stage bid price is ~$200K lower than GE/Zenon.	• Dow may not have sufficient similar experience. • In order to provide warranty and performance guarantees, Dow requested pilot testing. Pilot test results in potential 12-16 weeks delay [$140K-$190K][1]. • Additional engineering costs.
3	Reject both proposals and re-bid. Issues: • Allow pilot testing? • Re-emphasize that 3rd stage is optional? • Pre-qualify additional membrane systems?	• May attract more bids and/or better pricing.	• No assurance of more bids and/or better pricing. • Re-bid process results in 6-8 weeks delay [$70K-$95K][1]. • Pilot testing window may not be representative of CRW and SPW long term water quality. • Pilot test results in potential 12-16 weeks delay [$140K-$190K][1]. • Additional engineering costs. • Current bidders may or may not re-bid. • Current bidder(s) may protest. • Exceptions taken by new bidders may not be acceptable.
4	Request both GE/Zenon and Dow to provide supplemental information including pricing information and re-emphasize that 3rd stage is optional.	• Provides an opportunity for both bidders to supplement or refine proposals. • Allows better assessment of ultimate price.	• Results in a potential delay of 2 – 4 weeks [$23K-$48K][1].

1. Cost for delay is estimated as $1,690/day, based on discharging 0.5 mgd to PVRWRF and purchasing 0.5 mgd of water from Metropolitan Water District of Southern California (MWDSC). The total sewer operating cost for the PVRWRF is $1,891/MG per day and the water purchase cost from MWDSC is $484/acre-ft.

The following paragraphs summarize the bids, clarifications and supplemental information received from both H2O Innovation/Dow and GE/Zenon.

Summary of H2O Innovation/Dow Response

Summary of Submitted Bid

H2O Innovation submitted a proposal using Dow membranes. The submitted proposal was incomplete (with H2O Innovation indicating that they did not have sufficient time and information) and NPV could not be calculated. H2O Innovation took technical exceptions with the following information:

- Performance guarantees/warranties;
- Flux justification;
- References;
- Operational criteria; and
- Chemical dosing rates.

H2O Innovation had major performance issues with the RFP, including a lack of experience in facilities treating similar water quality. In addition, they indicated that they could not provide flux, chemical, warranty and performance guarantees without pilot testing.

H2O Innovation took two commercial exceptions including project schedule and taxes which were deemed to be limited in consequence.

Request for Clarification and Supplemental Information

In response to H2O Innovation's bid, a request for clarification and supplemental information was issued on June 22, 2010 (see **Appendix A**). The request for clarification and supplemental information and H2O Innovation's response are summarized in **Table 6**.

Table 6
H2O Innovation – Request for Clarification and Supplemental Information

Submittal Request	Response
All data required by the RFP and supplemental information considered relevant to the selection process.	H2O Innovation re-submitted Tables 2 – 8 of Section 00020, Bidding Sheets. All tables were completed with exception to Table 4 (Performance and Maintenance Contract Costs) and as a result, the operation and maintenance present worth cost and the NPV of H2O Innovation's proposed Dow membrane system could not be properly calculated.
Details on a recommended pilot testing plan, including objectives, timing and duration, and costs.	H2O Innovation strongly believed that pilot test is the only way that the necessary data could be obtained to confirm chemical and power usage and recommended two months minimum for an on-site pilot test.
Justification for the proposed flux.	Flux justification was provided, summarizing an evaluation of the design flux on all specified performance criteria of the proposed UF system, while meeting the requirements as outlined in the RFP.
Suggested modifications to the guarantee and warranty requirements in the RFP should a pilot test not be conducted.	In response to suggested modifications to the guarantee and warranty requirements, H2O Innovation provided two warranty sections – one for a contract with a pilot tested system and one without. Both warranty sections request the removal of the "Irreversible Flux Loss/Required Chemical Usage" and "20 Year Guaranteed Membrane Module Purchase Price" guarantees.
References of Dow membrane systems currently in operation.	H2O Innovation submitted three project references, but none of these reference facilities are treating

Submittal Request	Response
	reject water and only one reference facility treats TSS and turbidity similar to the PWFP RRF.
Suggestions on how submittals can be expedited to meet the schedule as indicated in the RFP.	Information on an expedited schedule on the part of H2O Innovation was not provided. They continued to take exception to Section 00100-3 of 4 of Article SC-4 of the contract documents.

Summary of GE/Zenon Response

Summary of Submitted Bid

GE/Zenon's submitted proposal was complete, including all the required information. NPV was calculated for both second and third stage membrane system as summarized in **Table 7**.

Table 7
GE/Zenon Cost Evaluation

	Second Stage	Third Stage
Total Capital Present Worth	$3.1 M	$0.78 M
Total O&M Present Worth	$0.72 M	$0.27M
Total Capital and O&M Present Worth	$3.8 M	$1.0M

GE/Zenon's bid item 4 - Cost of Year 1: Performance Contract / Agreement, bid item 5: Cost of Year 1: Scheduled Maintenance Contract / Agreement and bid item 6: Cost of Year 1: Annual Plant Evaluation Contract / Agreement were compared with their current contract with the District, as summarized in **Table 9** below, and could be negotiated if GE/Zenon is selected.

Table 8
Comparison of GE's Existing Contract with Proposal Information

ZenoTrac Monitor Serivce	Year 1	Year2	Year 3	Year 4	Year 5	Total	Comments
Existing Contract	$29,660	$29,660	$29,660			**$ 88,980**	
Proposed Contract	$14,740	$ 7,720	$ 7,720	$ 7,720	$ 7,720	**$ 45,620**	5 years; Does not include "MyZenon.com"
Revised Proposed Contract (7-9-10)	$14,740	$ 7,720	$ 7,720	$ 7,720	$ 7,720	**$ 45,620**	5 years; Does not include "MyZenon.com"
24/7 Emergency Telephone Support Service							
Existing Contract	$ 1,850	$ 1,850	$ 1,850			**$ 3,700**	
Proposed Contract	$ 2,470	$ 2,470	$ 2,470	$ 2,470	$ 2,470	**$ 12,350**	Optional item
Revised Proposed Contract (7-9-10)	$ 2,470	$ 2,470	$ 2,470	$ 2,470	$ 2,470	**$ 12,350**	Optional item
Service Visit - Days On Site/Annual Plant Evaluation Agreement							
Existing Contract	$10,240	$10,240	$10,240			**$ 30,720**	4 visits per year for 3 years (16 hours on site); $1,280/day
Proposed Contract	$ 5,320	$ 5,320	$ 5,320	$5,320	$5,320	**$ 26,600**	1 visit per year (3 days on site); see "Service Visit" on previous contract; $1,773/day
Revised Proposed Contract (7-9-10)	$5,320	$5,320	$5,320	$5,320	$5,320	**$ 26,600**	1 visit per year (3 days on site); see "Service Visit" on previous contract; $1,773/day

Scheduled Equipment Maintenance Agreement							
Proposed Contract	$ 102,910	$ 102,910	$ 102,910	$ 102,910	$ 102,910	**$ 514,550**	1 weekly visit for one year (2 hours each); 4 fiber repair visits (40 hours on site); not included on previous contract
Revised Proposed Contract (7-9-10)	$98,310	$98,310	$98,310	$98,310	$ 102,910	**$ 496,150**	1 weekly visit for one year (2 hours each); 4 fiber repair visits (40 hours on site); not included on previous contract

Service Visit - 1 Additional Day	
Existing Contract	$1,290
Proposed Contract	$1,480
Revised Proposed Contract (7-9-10)	$1,480

GE/Zenon took 38 commercial exceptions to the RFP requirements with the majority of exceptions taken to the following sections:

- Sections 00040/00520 – Bond (1)/Contract (2)
- Section 00700 – General Conditions (21)
- Section 00110, Paragraph SSC-12 – Supplementary Special Conditions, Membrane System Warranty (11)

Most of the exceptions were reasonable with the exception of the following six (6) that warrant further discussion:

Table 9
GE/Zenon – Commercial Exceptions

Section	GE/Zenon Response
Section 00520, Article 4.1 – Liquidated Damages	GE/Zenon requested cumulative liquidated damages of 10%
Section 00520, Article 6.2 – Assignment of Supplier's Contract to a General Contractor (GC)	GE/Zenon proposed that the District be responsible for payment if the GC fail to may payments
Section 00060 (Section D), Article D-24 – Foreign and Convict-Made Materials	GE/Zenon's proposed system uses ZW500d UF membrane modules which are manufactured in Hungary
Section 00100, Article SSC-12.D.10 – New Article	GE/Zenon proposed to add a new article indicating that upon completion of the 90-day operational period only equipment and membrane warranty provisions shall apply
Section 00110, Article SSC-12.E.1	GE/Zenon proposed to include wording that starts the extended membrane module warranty six (6) months after delivery to site
Section 00100, Article SSC-12.F.2.a-c	GE/Zenon proposed to guarantee the BMMPP for 20 years subject to adjustment based on inflation or a change in permeability of the membrane module (next generation design)

It is recommended that Redwine and Sherrill review the commercial exceptions to ensure that the proposed language is acceptable.

GE/Zenon took five (5) technical exceptions, two of which warrant further discussion as summarized below:

1. Concentration of solids / volumetric concentration factor (VCF) calculation: GE/Zenon guarantees 1.5 log removal for the 2nd stage and 0.75 log removal for the 3rd stage. This will not meet the filtrate water quality requirements listed in Table 2 of Section 11400 of the RFP.
2. Equipment proposed for the RRF did not include sole source equipment as listed in Appendix B of the RFP. GE/Zenon proposed to use equipment items that were used for the 1st stage system.

Request for Clarification and Supplemental Information

In response to GE/Zenon's bid, a request for clarification and supplemental information was issued on June 22, 2010 (see **Appendix B**). The request for clarification and supplemental information and H2O Innovation's response are summarized in **Table 10**.

Table 10
GE/Zenon – Request for Clarification and Supplemental Information

Submittal Request	Response
Clarifications how their recommendation would change should the District elect to proceed without a third stage membrane system.	GE/Zenon removed the cost of the third stage system from their bid sheets and slightly decreased the price for the scheduled maintenance contract.
Additional details on pricing on the proposed Schedule Equipment Maintenance Agreement.	Additional information was provided on how the scheduled maintenance contract would be modified. This included the assumption that the existing service agreement would be renewed and the number of site visits per year would be decreased.
Clarification on how bidding sheet items 3A and 3B would change if GE/Zenon were to provide equipment as per Appendices A and B of the RFP.	Revised pricing was provided to use materials from the District's approved materials list and sole source equipment list. The capital cost of the 2nd stage system increased by approximately $185,000 and the capital cost of the 3rd stage system increased by approximately $155,000.
Calculations of the VCF and log removals for the second and third stage systems..	VCF and log removal calculations were provided for review.
Comparable pricing for three (3) similar installations	Three additional project references were provided for review. A comparison of the ZW 500c membrane module pricing is included as **Figure 1**.
Clarification of exceptions.	GE/Zenon indicated that all contract items were negotiable to varying degrees.
Recommended modifications to the RFP that may provide cost savings.	Four (4) scenarios to reduce cost were submitted. These options require further input from the District and MWH to determine their feasibility.
Clarification on contract negotiation period.	GE/Zenon indicated that they would provide as much flexibility as possible to negotiate the contract during the specified negotiation period.
Supplemental information to the proposal.	No supplemental information was provided for review.

Figure 1
ZW 500d Price Comparison

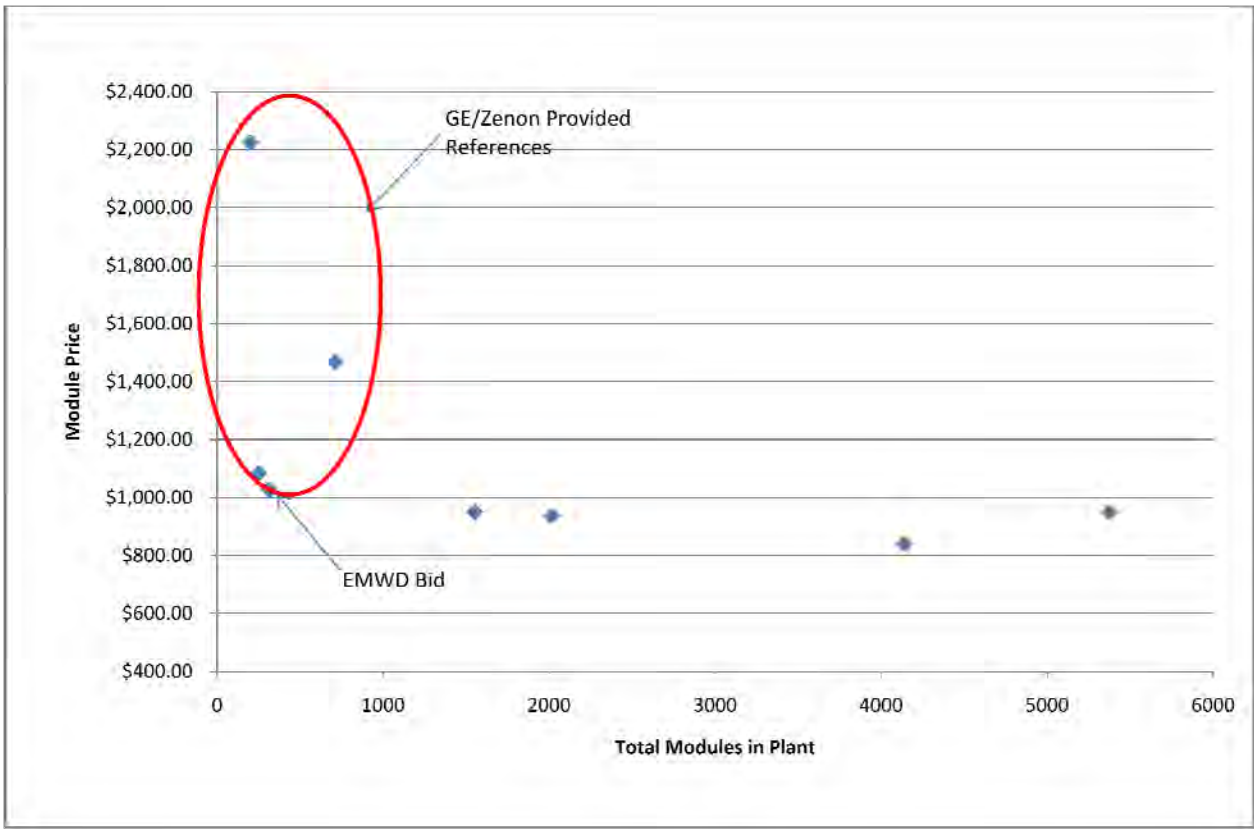

Evaluation

Non-Cost Evaluation

A summary of the non-cost evaluation criteria, based on submitted bids and responses to Requests for Clarification and Supplemental Information, is provided in **Table 11**.

Table 11
Non-Cost Evaluation Criteria

Non-Cost Evaluation Criteria	Weight	H2O Innovation/Dow	GE/Zenon
Compliance with Contract Terms	15	5	10
Technical Exceptions to Bid	20	5	15
Experience with Proposed Membranes on Reject Installations	20	5*	20
Local Technical Support	10	10	10
Ease of Operation and Maintenance	15	10	10
Footprint	10	10	10
Expandability	5	5	5
Constructability	5	5	5
Total	**100**	**55**	**85**

* Out of the three required project references, only one reference facility treats TSS and turbidity similar to PWRF RRF and response was deemed irresponsive. .

Although H2O Innovation/Dow submitted three project references, none of the reference facilities treat reject water, and only one reference facility treats TSS and turbidity similar to the PWFP RRF. Therefore, H2O Innovation/Dow is ranked low on the "Experience with Proposed Membranes on Reject Installations."

Most significantly, regardless if a pilot test is to be conducted, H2O Innovation/Dow requested the removal of the "Irreversible Flux Loss/Required Chemical Usage" and "20 Year Guaranteed Membrane Module Purchase Price" guarantees. The District will be placed in a disadvantageous position should this request be accommodated and this exception is therefore regarded as a fatal flaw in selecting H2O Innovation/Dow.

GE/Zenon took a technical exception in meeting the filtrate water quality requirements listed in **Table 2** of Section 11400 of the RFP and guarantees 1.5 log removal for the 2nd stage and 0.75 log removal for the 3rd stage. This exception, while limiting the District's ability to deliver filtrate to the disinfection, is not considered to be a fatal flaw, and further discussion and investigation are warranted.

Cost Evaluation

A summary of the cost evaluation is provided in **Table 12** and a summary of the NPV analysis of the bid is presented in **Table 13**.

H2O Innovation/Dow did not provide bid items 4, 5, and 6, which are the cost of Year 1: Performance Contract / Agreement; cost of Year 1: Scheduled Maintenance Contract / Agreement; and cost of Year 1: Annual Plant Evaluation Contract / Agreement respectively, per request for clarification and supplemental information. It is therefore not fair to compare the total bids as presented in **Table 12**.

RECOMMENDATION

Based on evaluation of the submitted bid documents and responses to requests for clarification and supplemental information using both non-cost and cost criteria, it was recommended that the District select and negotiate with GE/Zenon as the preferred bidder, taking into consideration that the GE/Zenon system will integrate smoothly with the existing system. GE/Zenon submitted a complete proposal with exceptions (both commercial and technical) that can be negotiated. In addition, GE/Zenon has submitted a price that results in a cost effective RRF installation.

The supply of a RRF by GE/Zenon also provides the following advantages:

- Synergy between the operation and maintenance of both the existing UF system and the proposed RRF.
- No delay to schedule.
- Less risk in integrating with the existing UF system, including the use of similar chemicals.

This recommendation was conditional upon a complete legal review of the GE/Zenon contract documents by the District to confirm that the commercial exceptions are negotiable within the 30 day contract negotiation period. The District agreed with MWH's recommendation to select and negotiate with GE/Zenon during July 28, 2010 workshop (see **Appendix A** for July 28, 2010 minutes).

Table 12
Summary of Cost Evaluation

Bid Item	Description	H2O Innovation/Dow		GE/Zenon	
		Original Submittal	Re-Submittal	Original Submittal	Re-Submittal
BIDDING SHEETS					
1	Furnish Approved Bonds and Insurance	$50,000	$50,000	$50,000	$50,000
2	Furnish Complete Shop Drawings and Design Support as specified in the Contract Documents	$50,000	$50,000	$50,000	$50,000
3	Furnish and Install a complete and operable MF/UF membrane filtration system for the treatment of reject water from an existing MF/UF membrane system				
3A	Second Stage Membrane System Includes Second Stage Membrane System and All Associated Ancillaries	$1,367,400	$1,367,400	$1,578,000[1]	$1,760,750[2]
3B	Third Stage Membrane System Includes Third Stage Membrane System Only	$132,400	$132,400	$310,000[1]	$465,815[2]
4	Cost of Year 1: Performance Contract / Agreement	Not Provided	Not Provided	$14,710	$14,710
5	Cost of Year 1: Scheduled Maintenance Contract / Agreement	Not Provided	Not Provided	$102,910	$98,310
6	Cost of Year 1: Annual Plant Evaluation Contract / Agreement	Not Provided	Not Provided	$5,320	$5,320
Total Bid		**$1,599,800**	**$1,599,800**	**$2,110,940[1]**	**$2,444,905[2]**

1. Not including the District's approved materials list (Appendix A of the RFP) and sole source materials list (Appendix B of the RFP).
2. Including the District's approved materials list (Appendix A of the RFP) and sole source materials list (Appendix B of the RFP).

Table 13
Summary of Net Present Value

Description	H2O Innovation/Dow			GE/Zenon			
	Original Submittal	Re-Submittal		Original Submittal		Re-Submittal	
		2nd Stage	3rd Stage	2nd Stage	3rd Stage	2nd Stage	3rd Stage
Total Capital Present Worth	--[1]	$3.3 M[2]	$0.6 M[2]	$3.8 M	$0.9 M	$4.0 M[3]	$1.1 M[3]
Total O&M Present Worth	--[1]	$0.5 M[2]	$0.2 M[2]	$0.7 M	$0.2 M	$0.7 M[4]	$0.2 M[4]
Total Capital and O&M Present Worth	--[1]	$3.8 M[2]	$0.8 M[2]	$4.5 M	$1.1 M	$4.7 M	$1.3 M

1. Original submittal did not contain enough information to calculate the NPV.
2. Does not take bid items 4, 5 and 6, which are the cost of Year 1: Performance Contract / Agreement, cost of Year 1: Scheduled Maintenance Contract / Agreement, and cost of Year 1: Annual Plant Evaluation Contract / Agreement respectively, per request for clarification and supplemental information, into account. Therefore, the NPV for H2O Innovation/Dow and GE/Zenon cannot be fairly compared.
3. Calculated using values provided in response to Q3 of the Request for Clarifications.
4. Calculated using values provided in response to Q1 of the Request for Clarifications.

Appendix 2-B

GE PID from Submittal #D-1.0 200515

Drawing Set for

EMWD PWFP REJECT
RECOVERY FACILITY

GE Water & Process Technologies

imagination at work

Project Number: 200515

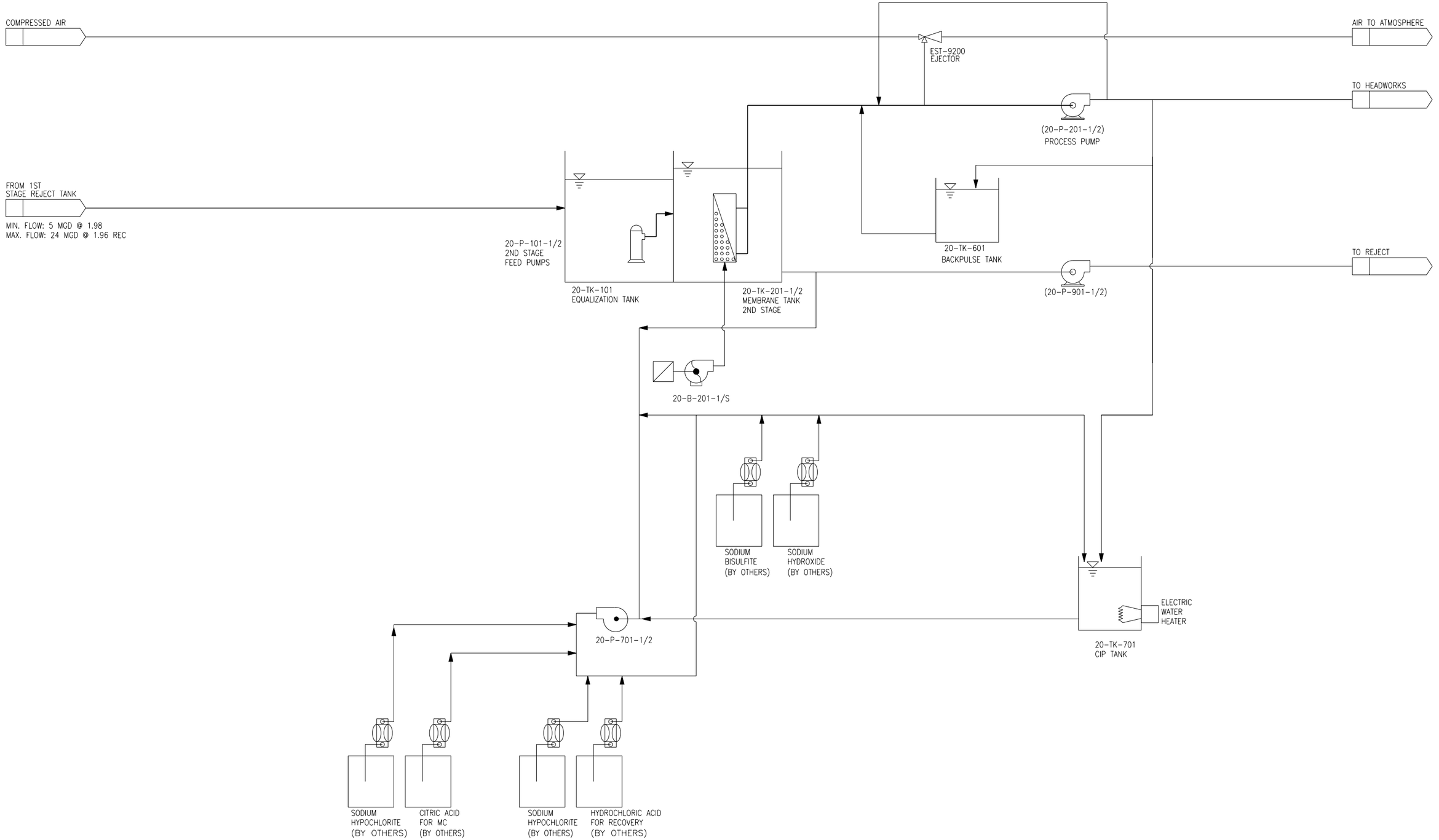

REV	DESCRIPTION	ECO	DWN	APVD	DATE	CHKD
0	ISSUED FOR APPROVAL		HR		04MAY11	R.P

TOLERANCES UNLESS NOTED
DECIMALS ANGLES
.X ± ±
.XX ± FRAC
.XXX ± ±
DIMENSIONS IN INCHES
DO NOT SCALE
THIRD ANGLE

		DATE
DRAWN BY	AK	28APR11
CHECKED BY	R.P	28APR11
APPROVED BY		DATE
APPROVED BY		DATE

GE
Water & Process Technologies
GLOBAL HEADQUARTERS : TREVOSE, PA USA +1-215-355-3300 WWW.GEWATER.COM

THIS DRAWING, THE DESIGN AND THE PATENTS IT COVERS, IS THE PROPERTY OF GENERAL ELECTRIC COMPANY AND ITS AFFILIATES AND THE INFORMATION CONTAINED HEREIN IS PROPRIETARY INFORMATION WHICH IS NOT TO BE DISCLOSED TO ANYONE WITHOUT PRIOR WRITTEN CONSENT OF SAID COMPANY. THIS DRAWING IS TO BE USED EXCLUSIVELY FOR THE PURPOSES EXPRESSLY AUTHORIZED BY GENERAL ELECTRIC COMPANY AND ITS AFFILIATES THROUGH ITS OFFICERS AND QUALIFIED REPRESENTATIVES AND FOR NO OTHER PURPOSE. NEITHER THIS DRAWING, NOR ANY PORTION THEREOF, SHALL BE REPRODUCED WITHOUT THE PRIOR WRITTEN CONSENT OF SAID COMPANY, AND ANY SUCH REPRODUCTION SHALL BEAR THIS NOTICE.

CLIENT/JOB: EMWD PWFP REJECT RECOVERY FACILITY

TITLE: PROCESS FLOW DIAGRAM

FILE: MICROSTATION

MATERIAL:

SIZE	DRAWING NO.	REV
D	200515-AM-01	0
PROJECT	200515	
SCALE N.T.S.	SHEET 1OF 1	

P/N 1161662-RHP01

CONTROL VALVE ACTUATORS

- PISTON DOUBLE ACTING
- PISTON SPRING TO OPEN
- PISTON SPRING TO CLOSE
- DIAPHRAGM DOUBLE ACTING
- DIAPHRAGM SPRING TO OPEN
- DIAPHRAGM SPRING TO CLOSE
- DIAPHRAGM DOUBLE BALANCING
- BACK PRESSURE CONTROL (EXTERNAL REGULATING)
- BACK PRESSURE CONTROL (INTERNAL REGULATING)
- PRESSURE REDUCING (EXTERNAL REGULATING)
- PRESSURE REDUCING (INTERNAL REGULATING)
- (M) ROTARY MOTOR ANALOG
- (M) ROTARY MOTOR DIGITAL
- I/P CONVERTER
- POSITIONER
- T TRAVEL STOP
- GEAR MANUAL GEAR WHEEL
- CHAIN MANUAL CHAIN WHEEL
- S SOLENOID
- S SOLENOID 3 WAY
- S SOLENOID 4 WAY

VALVE SYMBOLS

(VALVES NORMALLY OPEN EXCEPT WHEN SHADED)

- GATE (OR GENERIC)
- BALL
- BUTTERFLY
- NEEDLE
- GLOBE
- DIAPHRAGM
- ANGLE
- PLUG
- PINCH
- V-BALL
- K K KNIFE GATE
- UPWARD OPENING SLIDING GATE
- DOWNWARD OPENING SLIDING GATE
- MANUAL BLAST GATE
- BACKFLOW PREVENTER
- CHECK
- INJECTION QUILL
- FOOT
- FLOAT
- MUD
- 3 WAY
- 4 WAY
- 5 WAY
- 6 WAY
- 2 VALVE MANIFOLD
- 3 VALVE MANIFOLD
- 5 VALVE MANIFOLD
- SAMPLE

7

- PRESSURE SAFETY
- VACUUM SAFETY
- MULTIFUNCTION
- PRESSURE RUPTURE DISK
- VACUUM RUPTURE DISK
- AIR RELEASE
- VACUUM BREAKER
- VENT VENT
- GROUND
- DRAIN DRAIN

PUMPS, BLOWERS, & COMPRESSORS

- CENTRIFUGAL PUMP
- CENTRIFUGAL/ REGENERATIVE BLOWER
- PROPELLER PUMP
- ROTARY LOBE COMPRESSOR BLOWER
- METERING PUMP
- AIR OPERATED DOUBLE DIAPHRAGM PUMP
- VACUUM PUMP (DRY)
- POSITIVE DISPLACEMENT PUMP
- VACUUM PUMP LIQUID RING
- VERTICAL TURBINE PUMP
- AIR COMPRESSOR PISTON
- CAN PUMP
- AIR COMPRESSOR ROTARY SCREW
- WELL PUMP
- REFRIGERATED AIR DRYER
- DRUM PUMP
- FAN
- SUBMERSIBLE SUMP PUMP
- HP LP ERI PRESSURE EXCHANGER
- HP LP HYDRAULIC PRESSURE BOOSTER
- M MOTOR

FLOW ELEMENT

- PADDLE WHEEL
- ANNUBAR
- FLOW NOZZLE
- FLUME
- M MAGNETIC
- PITOT
- SONIC/ ULTRASONIC
- TURBINE
- VENTURI TUBE
- VORTEX
- MASS FLOW/ CORIOLIS
- ROTAMETER
- FG IN-LINE FLOW GLASS
- FLOW STRAIGHTENER
- FIXED ORIFICE
- ADJUSTABLE ORIFICE
- RESTRICTED ORIFICE
- RESTRICTED ORIFICE ANGLE
- ORIFICE PLATE QUICK-CHANGE

CONNECTIONS

- FLANGE
- FLANGE BLIND
- MECHANICAL COUPLING OR VICTAULIC
- MECHANICAL COUPLING OR VICTAULIC PLUG
- SANITARY
- SANITARY PLUG
- THREADED
- THREADED PLUG
- SOCKET
- UNION
- CAMLOCK
- CAMLOCK PLUG
- HOSE BARB
- WELDED PIPE CAP
- PLAIN END PIPE COUPLING
- REDUCER
- COMPRESSION FITTING
- COMPRESSION FITTING PLUG
- SPECTACLE BLIND OPEN
- SPECTACLE BLIND CLOSED

HEATING

- TANK HEATER
- HEAT EXCHANGER
- IN-LINE HEATER
- PLATE & FRAME HEAT EXCHANGER
- DESUPERHEATER

FILTERS

- FIXED SCREEN
- TOP HAT STRAINER
- BAR SCREEN
- HEPA FILTER
- Y STRAINER
- CONICAL STRAINER
- F FILTER
- PUMP SCREEN
- ST STEAM TRAP
- R/T RESIN TRAP

RO/UF

- FOUR PORT HOUSING
- TWO PORT HOUSING
- END PORT HOUSING
- MEMBRANE MODULE

VESSELS/TRIM

- CONICAL BOTTOM TANK
- TANK (CLOSED TOP)
- TANK (OPEN TOP)
- DOMED TANK
- PRESSURE VESSEL HORIZONTAL/ VERTICAL OR RECEIVER
- M PROPELLER AGITATOR
- VB VORTEX BREAKER
- VESSEL INSULATION
- LEVEL GLASS
- ELLIPTICAL MANWAY
- MANHOLE
- MANHOLE W/ DAVIT ARM
- VESSEL SIGHT GLASS
- WATER LEVEL
- LADDER/ PLATFORM

MISCELLANEOUS

- MUFFLER
- EDUCTOR
- STATIC MIXER
- EXPANSION JOINT
- SILENCER
- VIBRATION ISOLATOR
- HIGH PRESSURE FLEXIBLE CONNECTOR
- INJECTION SPARGER
- DIAPHRAGM SEAL/ GUAGE GUARD
- PULSATION DAMPENER
- SPRAYER NOZZLE
- DESICCANT AIR DRYER
- HYDROMETER POT
- COARSE BUBBLE DIFFUSER ELEVATION VIEW
- FINE BUBBLE DIFFUSER ELEVATION VIEW
- THERMOWELL
- TOP MOUNT LEVEL SWITCH
- ULTRASONIC LEVEL
- CALIBRATION COLUMN
- XXX XXX PIG TAIL
- ION EXCHANGE BOTTLE

SCOPE BREAK

- CLIENT/OTHER
- GEWPT
- MATERIAL BREAK
- MATERIAL A — MATERIAL B
- PIPE INSULATION/ DOUBLE CONTAINMENT
- PP 2" ("PP" INDICATES PERSONNEL PROTECTION –OPTIONAL)

LINE TYPES

- PRIMARY PROCESS
- SECONDARY PROCESS
- SAMPLE/DRAINS/ VENTS/ETC
- PRIMARY PROCESS (BY OTHERS)
- SECONDARY PROCESS (BY OTHERS)
- FUTURE
- EQUIPMENT LIMIT OR BOUNDARY LINE
- EQUIPMENT
- EQUIPMENT (BY OTHERS)
- FLEX HOSE/TUBING
- SOFTWARE–LINK
- ELECTRICAL
- ELECTROMAGNETIC OR SONIC SIGNAL (WIRELESS)
- PNEUMATIC
- HYDRAULIC SIGNAL
- CAPILLARY TUBING
- E HEAT–TRACING
- ST STEAM–TRACE
- ET ELECTRICAL–TRACE

MISCELLANEOUS LINE OBJECTS

- SLOPE
- CONTINUATION SYMBOL
- CONTINUATION SYMBOL
- CROSSOVER LINE
- REVISION CLOUD
- A REVISION TRIANGLE

REV	DESCRIPTION	ECO	DWN	APVD	DATE	CHKD
0	ISSUED FOR APPROVAL		AK		28APR11	R.P

TOLERANCES UNLESS NOTED
DECIMALS .X ± .XX ± .XXX ±
ANGLES ± FRAC ±
DIMENSIONS IN INCHES
DO NOT SCALE
THIRD ANGLE

DRAWN BY	AK	DATE 28APR11
CHECKED BY	R.P	DATE 28APR11
APPROVED BY		DATE
APPROVED BY		DATE

GE
Water & Process Technologies
GLOBAL HEADQUARTERS : TREVOSE, PA USA +1-215-355-3300 WWW.GEWATER.COM

THIS DRAWING, THE DESIGN AND THE PATENTS IT COVERS, IS THE PROPERTY OF GENERAL ELECTRIC COMPANY AND ITS AFFILIATES AND THE INFORMATION CONTAINED HEREIN IS PROPRIETARY INFORMATION WHICH IS NOT TO BE DISCLOSED TO ANYONE WITHOUT PRIOR WRITTEN CONSENT OF SAID COMPANY. THIS DRAWING IS TO BE USED EXCLUSIVELY FOR THE PURPOSES EXPRESSLY AUTHORIZED BY GENERAL ELECTRIC COMPANY AND ITS AFFILIATES THROUGH ITS OFFICERS AND QUALIFIED REPRESENTATIVES AND FOR NO OTHER PURPOSE. NEITHER THIS DRAWING, NOR ANY PORTION THEREOF, SHALL BE REPRODUCED WITHOUT THE PRIOR WRITTEN CONSENT OF SAID COMPANY, AND ANY SUCH REPRODUCTION SHALL BEAR THIS NOTICE.

CLIENT/JOB: EMWD PWFP REJECT RECOVERY FACILITY

TITLE: PIPING & INSTR DIAGRAM LEGENDS & SYMBOLS

FILE: MICROSTATION

MATERIAL:

SIZE	DRAWING NO.	REV
D	200515-AP-01	0

PROJECT 200515

SCALE N.T.S. SHEET 1OF2

P/N 1161662-RHP01

INSTRUMENT FUNCTIONS

FIRST LETTER	MEASURED OR INITIATING VARIABLE	A ALARM	A HIGH- HIGH ALARM	A HIGH ALARM	A LOW ALARM	A LOW-LOW ALARM	A SENSOR FAULT ALARM	C BLIND CONTROLLER	C INDICATING CONTROLLER	E SENSOR (PRIMARY ELEMENT)	G GLASS	I INDICATOR	L PILOT LIGHT	Q TOTALIZER	R RECORD	S SWITCH	S HIGH-HIGH SWITCH	S HIGH SWITCH	S LOW SWITCH	S LOW-LOW SWITCH	T BLIND TRANSMITTER	T INDICATING TRANSMITTER	Y SOLENOID VALVE (PILOT), RELAY, COMPUTATION, CONVERTER	V,Z CONTROL VALVE	V,Z VALVE	V,Z FINAL CONTROL ELEMENT	SPECIAL IDENTIFICATION SYMBOL	SPECIAL IDENTIFICATION DESCRIPTION
A	ANALYSIS	AA	AAHH	AAH	AAL	AALL	AAT	AC	AIC	AE		AI	AL		AR	AS	ASHH	ASH	ASL	ASLL	AT	AIT	AY	ACV	AV	AZ		
B	BURNER, COMBUSTION																											
C	USER'S CHOICE																											
D	USER'S CHOICE																											
E	VOLTAGE	EA	EAHH	EAH	EAL	EALL	EAT	EC	EIC	EE		EI	EL		ER	ES	ESHH	ESH	ESL	ESLL	ET	EIT	EY			EZ		
F	FLOW	FA	FAHH	FAH	FAL	FALL	FAT	FC	FIC	FE	FG	FI	FL	FQI	FR	FS	FSHH	FSH	FSL	FSLL	FT	FIT	FY	FCV	FV		FO	ORIFICE PLATE
FF	FLOW RATIO	FFA	FFAHH	FFAH	FFAL	FFALL		FFC	FFIC			FFI			FFR	FFS	FFSHH	FFSH	FFSL	FFSLL			FFY	FFCV				
G	USER'S CHOICE																											
H	HAND	HA						HC	HIC				HL			HS								HCV	HV		HMS	PUSHBUTTON SWITCH
I	CURRENT (ELECTRICAL)	IA	IAHH	IAH	IAL	IALL	IAT	IC	IIC	IE		II	IL		IR	IS	ISHH	ISH	ISL	ISLL	IT	IIT	IY			IZ		
J	POWER	JA	JSHH	JAH	JAL	JALL	JAT	JC	JIC	JE		JI	JL	JQI	JR	JS	JSHH	JSH	JSL	JSLL	JT	LIT	JY			JZ		
K	TIME SCHEDULE	KA										KI	KL			KS							KY					
KQ	TIME TOTAL	KQA	KQAHH	KQAH	KQAL	KQALL						KQI	KQL		KQR	KQS	KQSHH	KQSH	KQSL	KQSLL								
L	LEVEL	LA	LAHH	LAH	LAL	LALL	LAT	LC	LIC	LE	LG	LI	LL		LR	LS	LSHH	LSH	LSL	LSLL	LT	LIT	LY	LCV	LV			
M	MOTOR CONTROL															MS												
N	USER'S CHOICE																											
O	USER'S CHOICE																											
P	PRESSURE OR VACUUM	PA	PAHH	PAH	PAL	PALL	PAT	PC	PIC			PI	PL		PR	PS	PSHH	PSH	PSL	PSLL	PT	PIT	PIT	PY	PV		PSV	PRESSURE SAFETY VALVE
PD	PRESSURE DIFFERENTIAL	PDAP	PDAHH	PDAH	PDAL	PDALL	PDAT	PDC	PDIC			PDI	PDL		PDR	PDS	PDSHH	PDSH	PDSL	PDSLL	PDT	PDIT	PDY	PDCV				
Q	QUANTITY													QQI														
R	RADIATION																											
S	SPEED OR FREQUENCY	SA	SAHH	SAH	SAL	SALL	SAT	SC	SIC	SE		SI	SL		SR	SS	SSHH	SSH	SSL	SSLL	ST	SIT	SY	SCV		SZ	SK	SPEED CONTROL STATION
T	TEMPERATURE	TA	TAHH	TAH	TAL	TALL	TAT	TC	TIC	TE		TI	TL		TR	TS	TSHH	TSH	TSL	TSLL	TT	TIT	TY	TCV	TV	TZ	TW	THERMOWELL
U	MULTI-VARIABLE																											
V	VIBRATION OR MECH. ANALYSIS	VA	VAHH	VAH			VAT			VE		VI	VL		VR	VS	VSHH	VSH			VT	VIT	VY					
W	WEIGHT OR FORCE	WA	WAHH	WAH	WAL	WALL	WAT	WC	WIC	WE		WI	WL	WQI	WR	WS	WSHH	WSH	WSL	WSLL	WT	WIT	WY	WCV	WV	WZ		
X	UNCLASSIFIED																											
Y	EVENT, STATE OR PRESENCE	YA										YI	YL		YR	YS												
Z	POSITION OR DIMENSION	ZA	ZAQ=OPEN		ZAC=CLOSE		ZAT	ZC	ZIC	ZE	ZG	ZI	ZL		ZR	ZS	ZSO=OPEN		ZSC=CLOSE		ZT	ZIT	ZY	ZCV	ZV	ZZ		

INSTRUMENT SYMBOLS

- PANEL MOUNT INSTRUMENT
- FIELD MOUNT OR PRIMARY INSTRUMENT
- BEHIND PANEL INSTRUMENT
- PILOT LIGHT
- PLC FUNCTION WITH DISPLAY
- PLC FUNCTION, BLIND
- PLC INPUT/OUTPUT

DI _ DISCRETE INPUT
DO _ DISCRETE OUTPUT
AI _ ANALOG INPUT
AO _ ANALOG OUTPUT

FUNCTIONS

- I — UNDEFINED INTERLOCK LOGIC
- Σ — SUMMING

CONTINUATION ARROWS

SERVICE
A | SHEET X
FLOW:
PRESSURE:
TEMP:
FLOW-SINGLE DIRECTION

SERVICE
A | SHEET X
FLOW:
PRESSURE:
TEMP:
FLOW-BOTH DIRECTIONS

A
TRANSFER ARROW TO SAME SHEET

1 | PID NUMBER SHEET X
ELECTRICAL TRANSFER ARROW TO DIFFERENT PID DOCUMENT

1
ELECTRICAL TRANSFER ARROW TO SAME PID DOCUMENT

EQUIPMENT / INSTRUMENT TAGGING SCHEME

11-XXX-222A-3
- 11 — IDENTICAL SKID/TRAIN IDENTIFIER (IF NECESSARY)
- A — MULTIPLE INSTRUMENT IDENTIFIER (IF NECESSARY)
- 222 — EQUIPMENT NUMBER/ INSTRUMENT LOOP NUMBER
- XXX — EQUIPMENT ABBREVIATION/ INSTRUMENT FUNCTION
- 1 — PROCESS AREA

LINE IDENTIFIER

X"-XXPPPA-SNN
- X — LINE CLASS SPECIFICATION
- S — SCHEDULE (OPTIONAL)
- N — SERVICE DIFFERENTIATOR (OPTIONAL)
- NN — PR CODE (OPTIONAL)
- A — MATERIAL CODE
- PPP — PIPE SIZE

MATERIAL CODE	MATERIAL
CC	CONCRETE
	METALLIC
AUST	AUSTENITIC STAINLESS STEEL
AY	ALLOY 20
CI	CAST IRON
CS	CARBON STEEL
CU	COPPER
DI	DUCTILE IRON
DL	PVDF LINED
DUPL	DUPLEX STAINLESS STEEL
HC	HASTELLOY C
PL	POLYPROPYLENE LINED
SA	304, 304L STAINLESS STEEL
SB	AL-6XN
SC	254-SMO
SD	2205
SE	2507
SF	904L
SG	ZERON 100
SS	316, 316L STAINLESS STEEL
SUAU	SUPER AUSTENITIC STAINLESS STEEL
TL	PTFE LINED
	PLASTIC
CP	CPVC
FR	FIBER REINFORCED PLASTIC
PE	POLYETHYLENE
PP	POLYPROPYLENE
PV	PVC
PD	PVDF
PT	PTFE

PR CODE	CLASS
	METALLIC
125	ANSI CLASS 125
150	ANSI CLASS 150
300	ANSI CLASS 300
400	ANSI CLASS 400
600	ANSI CLASS 600
900	ANSI CLASS 900
	PLASTIC
040	SCHEDULE 40
080	SCHEDULE 80
120	SCHEDULE 120
D64	SDR 64
D41	SDR 41
D32	SDR 32.5
D26	SDR 26
D21	SDR 21
D17	SDR 17
D13	SDR 13.5
	MULTIPLE
P06	PN6
P10	PN10
P16	PN16
P20	PN20
P50	PN50
P68	PN68
P100	PN100
A00	ATMOSPHERIC
V00	VACUUM

EQUIPMENT ABBREVIATIONS

AB	ABSORBER
AC	AIR COMPRESSOR
ACF	ACTIVATED CARBON FILTER
AER	AERATOR
ARV	AIR RELEASE VALVE
B	BLOWER
BF	BAG FILTER
C	CENTRIFUGE, CYCLONE
CD	CONDENSER
CDM	CATALYTIC DESTRUCT MODULE
CF	CARTRIDGE FILTER
CH	CHILLER
CHL	CHLORINATOR
CIP	CLEAN-IN-PLACE
CL	CLARIFIER
CONV	CONVEYOR
CORS	CATALYTIC OXYGEN REMOVAL SYSTEM
CP	CONTROL PANEL
CR	CRYSTALIZER
CS	CHEMICAL SYSTEM
CT	COOLING TOWER, CARBON TOWER
CV	CHECK VALVE
DAF	DISSOLVED AIR FLOATATION
DO	DISSOLVED OXYGEN
DMF	DUAL MEDIA FILTER
DR	AIR DRIER
E	EDUCTOR
EAF	ENTRAPPED AIR FLOATATION
ED	ELECTRODIALYSIS
EDI	ELECTRODEIONIZATION
EDR	ELECTRODIALYSIS REVERSAL
EV	EVAPORATOR
F	FILTER
FAN	FAN
FC	FAIL CLOSE
FDA	FORCED DRAFT AERATOR, DEGASIFIER
FO	FAIL OPEN
FL	FAIL LAST
FP	FILTER PRESS
GF	GRAVITY FILTER
H	HEATER
HF	HEPA FILTER
HMI	HUMAN-MACHINE INTERFACE
HOA	HAND-OFF-AUTO
HPB	HYDRAULIC PRESSURE BOOSTER
HX	HEAT EXCHANGER
IAS	INSTRUMENT AIR SUPPLY
IQ	INJECTION QUILL, INJECTION CHECK VALVE
IX	ION EXCHANGER
LS	LIME SOFTENER
M	MOTOR
MBR	MEMBRANE BIOREACTOR
MCC	MOTOR CONTROL CENTER
MD	MEMBRANE DEGASIFIER
MF	MICROFILTRATION
ML	MUFFLER, SILENCER
MMF	MULTIMEDIA FILTER
MX	MIXER
NF	NANOFILTRATION
OC	OXYGEN CONCENTRATOR
ORP	OXYGEN-REDUCTION POTENTIAL
OZ	OZONATOR
OZG	OZONE GENERATOR
P	PUMP
PD	PULSATION DAMPENER
PLC	PROGRAMMABLE LOGIC CONTROLLER
PSE	RUPTURE DISC
PUV	MULTIFUNCTION VALVE
PX	PRESSURE EXCHANGER
RO	REVERSE OSMOSIS
RP	ROTARY PRESS
RT	RESIN TRAP
SC	SCRUBBER
SCP	SCRAPER
SCR	SCREEN
SFT	SOFTENER
SKM	SKIMMER
SM	STATIC MIXER, INLINE MIXER
ST	STEAM TRAP
STK	MEMBRANE STACK (ED, EDR, EDI, E-CELL)
STR	STRAINER
SV	SAMPLE VALVE
TK	TANK
TOC	TOTAL ORGANIC CARBON
TRB	TURBINE
UF	ULTRAFILTRATION
UPS	UNINTERRUPTIBLE POWER SUPPLY
UV	ULTRAVIOLET IRRADIATOR
VB	VACUUM BREAKER
VD	VACUUM DEGASIFIER

REV	DESCRIPTION	ECO	DWN	APVD	DATE	CHKD
0	ISSUED FOR APPROVAL		AK		28APR11	R.P

TOLERANCES UNLESS NOTED
DECIMALS: .X ± .XX ± .XXX ±
ANGLES ± FRAC ±
DIMENSIONS IN INCHES DO NOT SCALE
THIRD ANGLE

DRAWN BY AK DATE 28APR11
CHECKED BY R.P DATE 28APR11
APPROVED BY DATE
APPROVED BY DATE

GE Water & Process Technologies
GLOBAL HEADQUARTERS : TREVOSE, PA USA +1-215-355-3300 WWW.GEWATER.COM

THIS DRAWING, THE DESIGN AND THE PATENTS IT COVERS, IS THE PROPERTY OF GENERAL ELECTRIC COMPANY AND ITS AFFILIATES AND THE INFORMATION CONTAINED HEREIN IS PROPRIETARY INFORMATION WHICH IS NOT TO BE DISCLOSED TO ANYONE WITHOUT PRIOR WRITTEN CONSENT OF SAID COMPANY. THIS DRAWING IS TO BE USED EXCLUSIVELY FOR THE PURPOSES EXPRESSLY AUTHORIZED BY GENERAL ELECTRIC COMPANY AND ITS AFFILIATES THROUGH ITS OFFICERS AND QUALIFIED REPRESENTATIVES AND FOR NO OTHER PURPOSE. NEITHER THIS DRAWING, NOR ANY PORTION THEREOF, SHALL BE REPRODUCED WITHOUT THE PRIOR WRITTEN CONSENT OF SAID COMPANY, AND ANY SUCH REPRODUCTION SHALL BEAR THIS NOTICE.

CLIENT/JOB: EMWD PWFP REJECT RECOVERY FACILITY
FILE: MICROSTATION
MATERIAL:

TITLE: PIPING & INSTR DIAGRAM LEGENDS & SYMBOLS

SIZE	DRAWING NO.	REV
D	200515-AP-01	0
PROJECT	200515	
SCALE N.T.S.	SHEET 2 OF 2	

P/N 1161662-RHP01

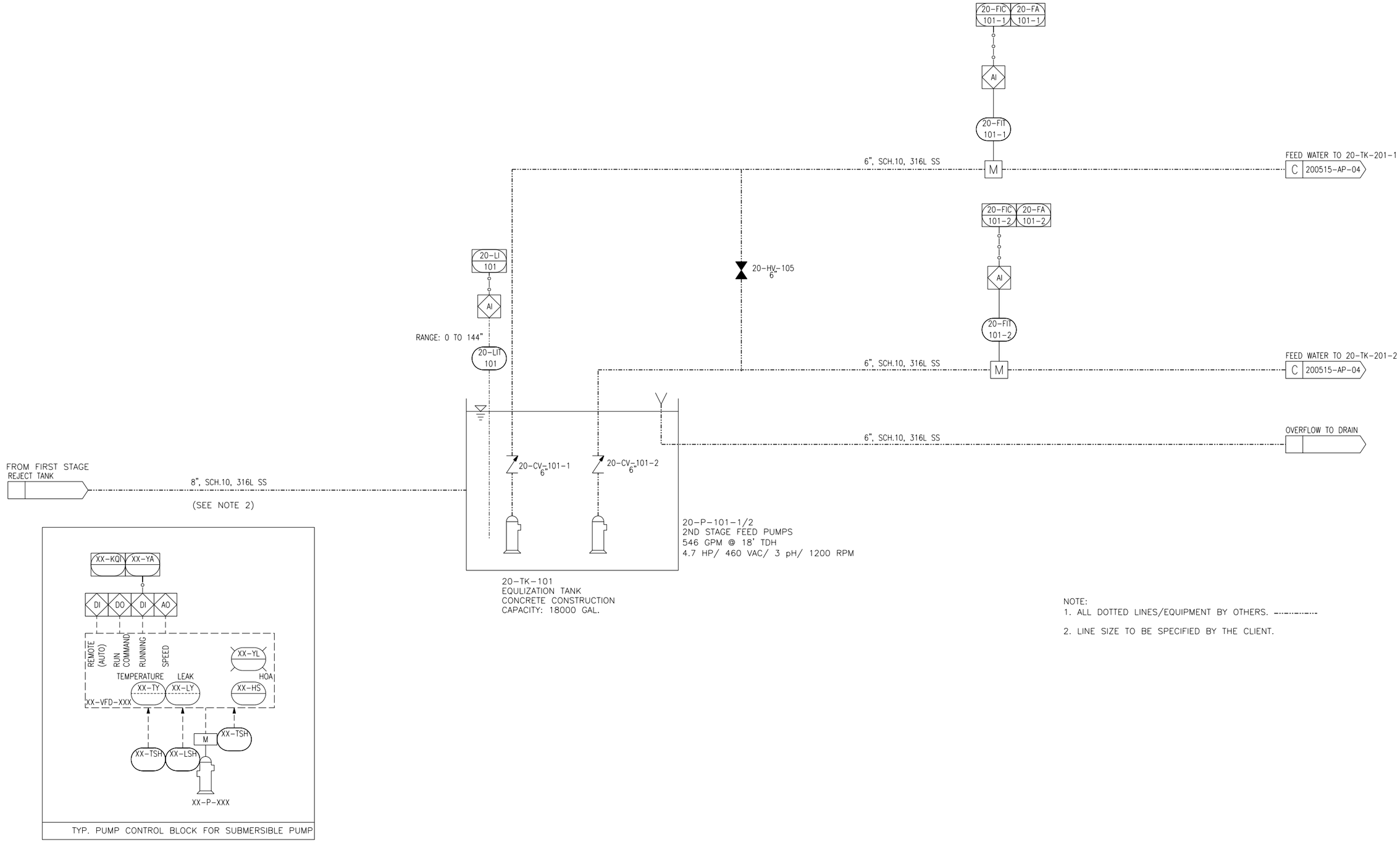

NOTE:
1. ALL DOTTED LINES/EQUIPMENT BY OTHERS. ----------

2. LINE SIZE TO BE SPECIFIED BY THE CLIENT.

REV	DESCRIPTION	ECO	DWN	APVD	DATE	CHKD
0	ISSUED FOR APPROVAL		HR		04MAY11	R.P

TOLERANCES UNLESS NOTED
DECIMALS .X ± .XX ± .XXX ±
ANGLES ± FRAC ±
DIMENSIONS IN INCHES DO NOT SCALE
THIRD ANGLE

DRAWN BY	AK	DATE 28APR11
CHECKED BY	R.P	DATE 28APR11
APPROVED BY		DATE
APPROVED BY		DATE

GE
Water & Process Technologies
GLOBAL HEADQUARTERS : TREVOSE, PA USA +1-215-355-3300 WWW.GEWATER.COM

THIS DRAWING, THE DESIGN AND THE PATENTS IT COVERS, IS THE PROPERTY OF GENERAL ELECTRIC COMPANY AND ITS AFFILIATES AND THE INFORMATION CONTAINED HEREIN IS PROPRIETARY INFORMATION WHICH IS NOT TO BE DISCLOSED TO ANYONE WITHOUT PRIOR WRITTEN CONSENT OF SAID COMPANY. THIS DRAWING IS TO BE USED EXCLUSIVELY FOR THE PURPOSES EXPRESSLY AUTHORIZED BY GENERAL ELECTRIC COMPANY AND ITS AFFILIATES THROUGH ITS OFFICERS AND QUALIFIED REPRESENTATIVES AND FOR NO OTHER PURPOSE. NEITHER THIS DRAWING, NOR ANY PORTION THEREOF, SHALL BE REPRODUCED WITHOUT THE PRIOR WRITTEN CONSENT OF SAID COMPANY, AND ANY SUCH REPRODUCTION SHALL BEAR THIS NOTICE.

CLIENT/JOB	EMWD PWFP REJECT RECOVERY FACILITY
FILE	MICROSTATION
TITLE	PIPING & INSTR DIAGRAM EQUALIZATION TANK
MATERIAL	

SIZE	DRAWING NO.	REV
D	200515-AP-02	0
PROJECT	200515	
SCALE N.T.S.	SHEET 1OF1	

P/N 1161662-RHP01

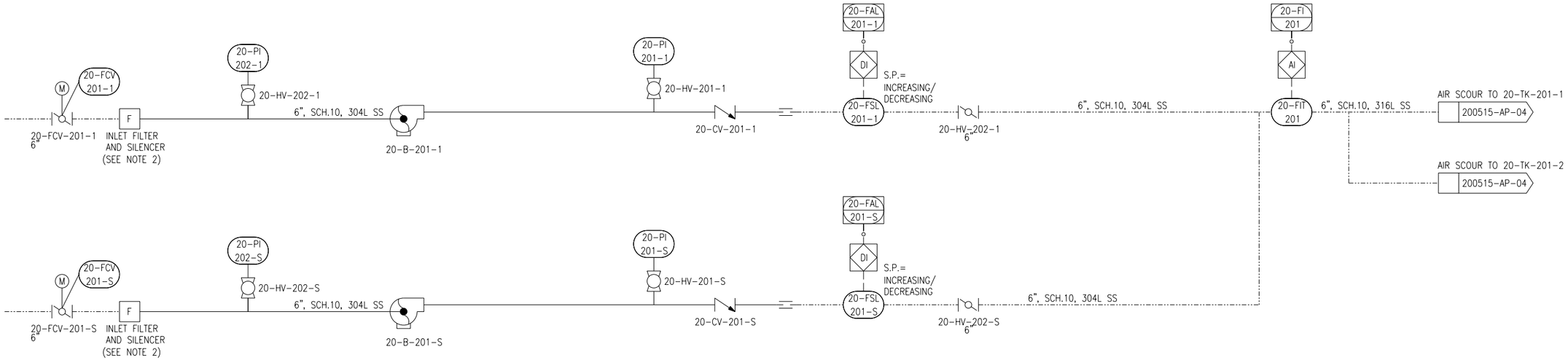

MEMBRANE AIR BLOWERS
75 HP/460 VAC/ 3 PH/ 60 Hz/ 3600 RPM
INITIAL PLANT STARTUP FLOW: 844 SCFM @ 4.9 PSIG
MAX FUTURE DESIGN FLOW: 1358 SCFM @ 4.9 PSIG

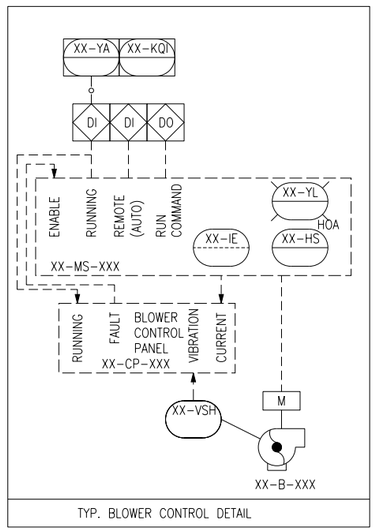

TYP. BLOWER CONTROL DETAIL

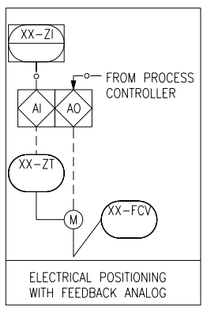

ELECTRICAL POSITIONING WITH FEEDBACK ANALOG

NOTE:

1. ALL DOTTED LINES/EQUIPMENT BY OTHERS.
2. LOCAL AIR INTAKE FOR BLOWER HAS BEEN ASSUMED.

REV	DESCRIPTION	ECO	DWN	APVD	DATE	CHKD
0	ISSUED FOR APPROVAL		HR		04MAY11	R.P

TOLERANCES UNLESS NOTED
DECIMALS ANGLES
.X ± ±
.XX ± FRAC
.XXX ± ±
DIMENSIONS IN INCHES
DO NOT SCALE
THIRD ANGLE

DRAWN BY	AK	DATE 28APR11
CHECKED BY	R.P	DATE 28APR11
APPROVED BY		DATE
APPROVED BY		DATE

GE Water & Process Technologies
GLOBAL HEADQUARTERS : TREVOSE, PA USA +1-215-355-3300 WWW.GEWATER.COM
THIS DRAWING, THE DESIGN AND THE PATENTS IT COVERS, IS THE PROPERTY OF GENERAL ELECTRIC COMPANY AND ITS AFFILIATES AND THE INFORMATION CONTAINED HEREIN IS PROPRIETARY INFORMATION WHICH IS NOT TO BE DISCLOSED TO ANYONE WITHOUT PRIOR WRITTEN CONSENT OF SAID COMPANY. THIS DRAWING IS TO BE USED EXCLUSIVELY FOR THE PURPOSES EXPRESSLY AUTHORIZED BY GENERAL ELECTRIC COMPANY AND ITS AFFILIATES THROUGH ITS OFFICERS AND QUALIFIED REPRESENTATIVES AND FOR NO OTHER PURPOSE. NEITHER THIS DRAWING, NOR ANY PORTION THEREOF, SHALL BE REPRODUCED WITHOUT THE PRIOR WRITTEN CONSENT OF SAID COMPANY, AND ANY SUCH REPRODUCTION SHALL BEAR THIS NOTICE.

CLIENT/JOB	EMWD PWFP REJECT RECOVERY FACILITY
TITLE	PIPING & INSTR DIAGRAM P.D BLOWERS & ASSOC. EQUP.
FILE	MICROSTATION
MATERIAL	
SIZE	D
DRAWING NO.	200515-AP-03
REV	0
PROJECT	200515
SCALE	N.T.S.
SHEET	1OF 1

P/N 1161662-RHP01

NOTES:

1. ALL DOTTED LINES/EQUIPMENT BY OTHERS. - - - - - - - -
2. DRAWING TYPICAL FOR ALL TRAINS.
3. AN OVERFLOW IS REQUIRED FOR EACH TRAIN.
4. A PORTION OF THE AIR HEADER NEEDS TO BE LOCATED ABOVE THE HIGHEST WATER LEVEL IN THE MEMBRANE TANK.
5. 5 PIPE DIAMETERS UPSTREAM, 3 PIPE DIAMETERS DOWNSTREAM, STRAIGHT PIPE RUN RECOMMENDED FOR MAXIMUM ACCURACY.
6. PIPE VENT TO MEMBRANE TANK OR OTHER SAFE LOCATION.
7. VENT VALVES MAY BE REQUIRED BASED ON PLANT LAYOUT AND HYDRAULIC REQUIREMENTS.

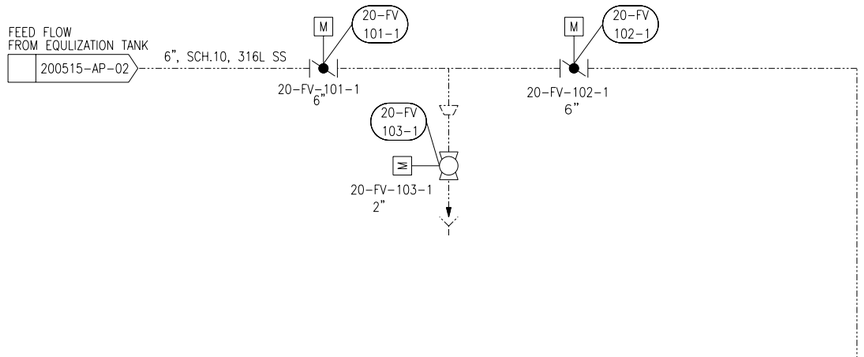

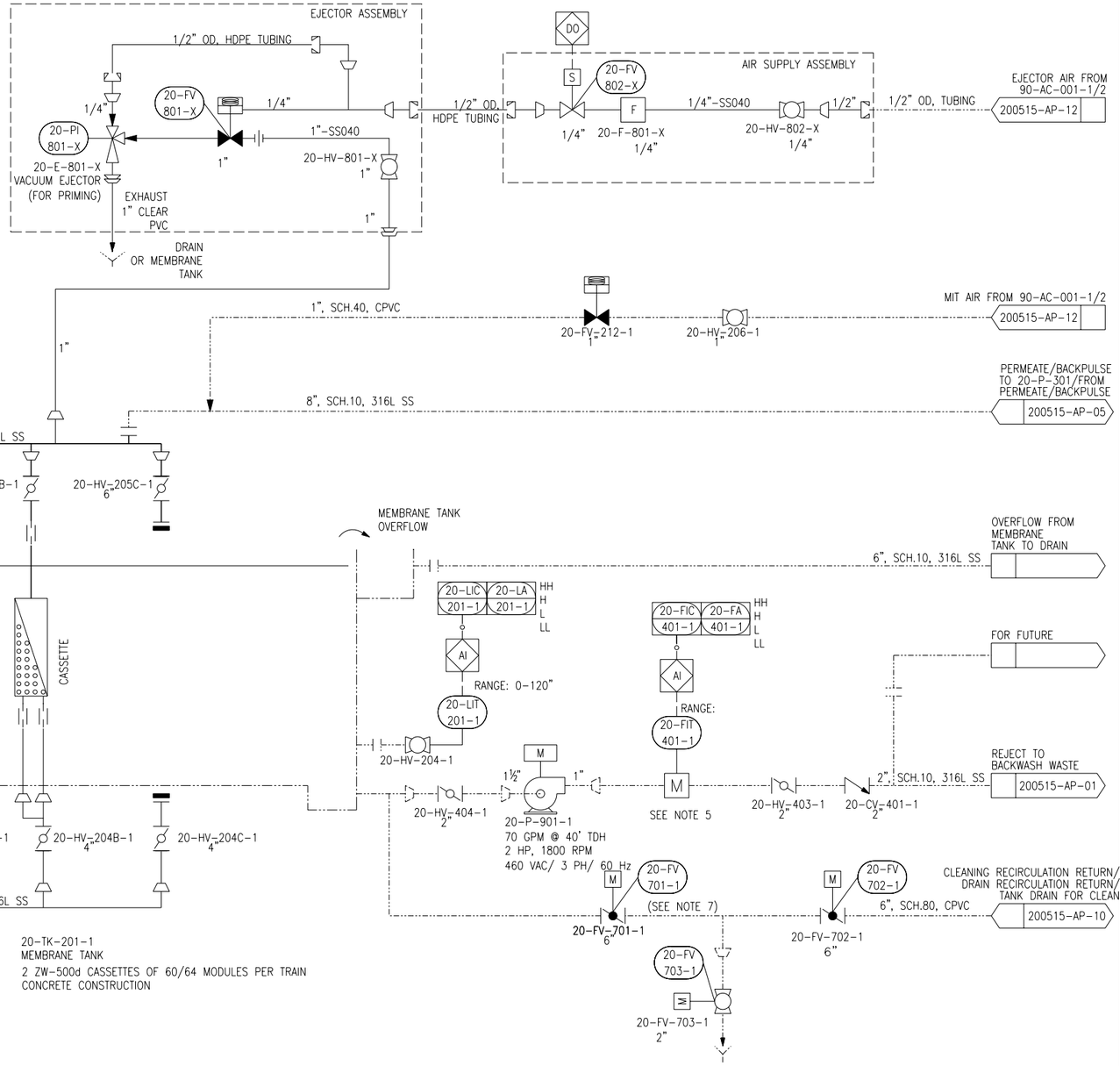

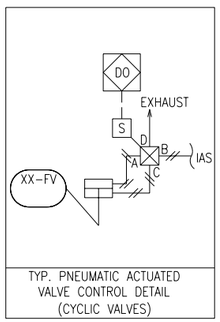

TYP. PNEUMATIC ACTUATED VALVE CONTROL DETAIL (CYCLIC VALVES)

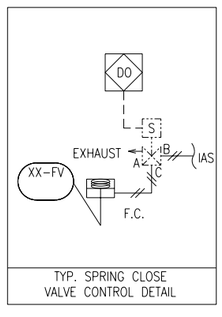

TYP. SPRING CLOSE VALVE CONTROL DETAIL

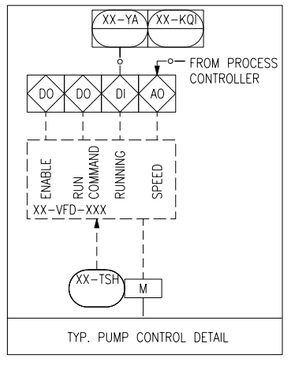

TYP. PUMP CONTROL DETAIL

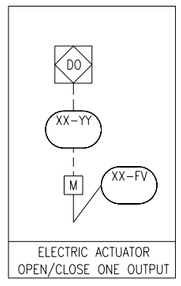

ELECTRIC ACTUATOR OPEN/CLOSE ONE OUTPUT

REV	DESCRIPTION	ECO	DWN	APVD	DATE	CHKD
0	ISSUED FOR APPROVAL		HR		04MAY11	R.P

TOLERANCES UNLESS NOTED
DECIMALS ANGLES
.X ± ±
.XX ± FRAC
.XXX ± ±
DIMENSIONS IN INCHES DO NOT SCALE
THIRD ANGLE

DRAWN BY	AK	DATE 28APR11
CHECKED BY	R.P	DATE 28APR11
APPROVED BY		DATE
APPROVED BY		DATE

GE Water & Process Technologies
GLOBAL HEADQUARTERS : TREVOSE, PA USA +1-215-355-3300 WWW.GEWATER.COM

THIS DRAWING, THE DESIGN AND THE PATENTS IT COVERS, IS THE PROPERTY OF GENERAL ELECTRIC COMPANY AND ITS AFFILIATES AND THE INFORMATION CONTAINED HEREIN IS PROPRIETARY INFORMATION WHICH IS NOT TO BE DISCLOSED TO ANYONE WITHOUT PRIOR WRITTEN CONSENT OF SAID COMPANY. THIS DRAWING IS TO BE USED EXCLUSIVELY FOR THE PURPOSES EXPRESSLY AUTHORIZED BY GENERAL ELECTRIC COMPANY AND ITS AFFILIATES THROUGH ITS OFFICERS AND QUALIFIED REPRESENTATIVES AND FOR NO OTHER PURPOSE. NEITHER THIS DRAWING, NOR ANY PORTION THEREOF, SHALL BE REPRODUCED WITHOUT THE PRIOR WRITTEN CONSENT OF SAID COMPANY, AND ANY SUCH REPRODUCTION SHALL BEAR THIS NOTICE.

CLIENT/JOB	EMWD PWFP REJECT RECOVERY FACILITY
TITLE	PIPING & INSTR DIAGRAM MEMBRANES & ASSOC. EQUIP.
FILE	MICROSTATION
MATERIAL	

SIZE	DRAWING NO.	REV
D	200515-AP-04	0
PROJECT	200515	
SCALE N.T.S.	SHEET 1OF 1	

P/N 1161662-RHP01

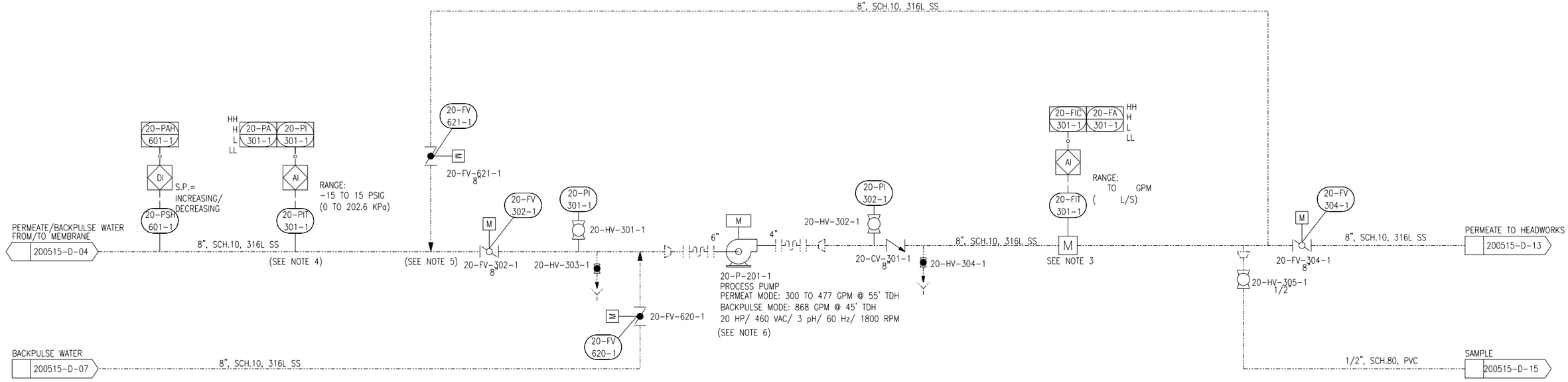

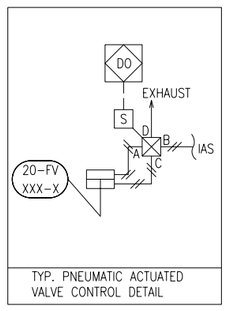

TYP. PNEUMATIC ACTUATED VALVE CONTROL DETAIL

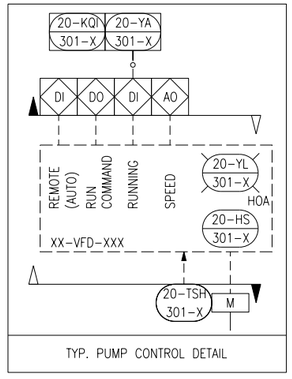

TYP. PUMP CONTROL DETAIL

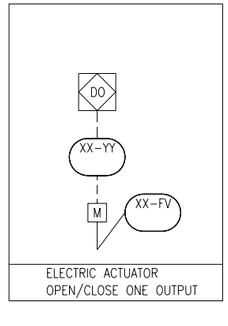

ELECTRIC ACTUATOR OPEN/CLOSE ONE OUTPUT

NOTES:

1. ALL DOTTED LINES/EQUIPMENT BY OTHERS
2. DRAWING TYPICAL FOR ALL TRAINS.
3. 5 PIPE DIAMETERS UPSTREAM, 3 PIPE DIAMETERS DOWNSTREAM, STRAIGHT PIPE RUN RECOMMENDED FOR MAXIMUM ACCURACY.
4. MOUNT IN SIDE OF PIPE.
5. VENT VALVES MAY BE REQUIRED BASED ON PLANT LAYOUT AND HYDRAULIC REQUIREMENTS.
6. TDH FOR BACK PULSE MODE TO BE FINALIZED LATER.

REV	DESCRIPTION	ECO	DWN	APVD	DATE	CHKD
0	ISSUED FOR APPROVAL		HR		04MAY11	R.P

TOLERANCES UNLESS NOTED
DECIMALS .X ± .XX ± .XXX ±
ANGLES ± FRAC ±
DIMENSIONS IN INCHES DO NOT SCALE
THIRD ANGLE

DRAWN BY	AK	DATE 28APR11
CHECKED BY	R.P	DATE 28APR11
APPROVED BY		DATE
APPROVED BY		DATE

GE Water & Process Technologies
GLOBAL HEADQUARTERS : TREVOSE, PA USA +1-215-355-3300 WWW.GEWATER.COM

THIS DRAWING, THE DESIGN AND THE PATENTS IT COVERS, IS THE PROPERTY OF GENERAL ELECTRIC COMPANY AND ITS AFFILIATES AND THE INFORMATION CONTAINED HEREIN IS PROPRIETARY INFORMATION WHICH IS NOT TO BE DISCLOSED TO ANYONE WITHOUT PRIOR WRITTEN CONSENT OF SAID COMPANY. THIS DRAWING IS TO BE USED EXCLUSIVELY FOR THE PURPOSES EXPRESSLY AUTHORIZED BY GENERAL ELECTRIC COMPANY AND ITS AFFILIATES THROUGH ITS OFFICERS AND QUALIFIED REPRESENTATIVES AND FOR NO OTHER PURPOSE. NEITHER THIS DRAWING, NOR ANY PORTION THEREOF, SHALL BE REPRODUCED WITHOUT THE PRIOR WRITTEN CONSENT OF SAID COMPANY, AND ANY SUCH REPRODUCTION SHALL BEAR THIS NOTICE.

CLIENT/JOB	EMWD PWFP REJECT RECOVERY FACILITY
FILE	MICROSTATION
TITLE	PIPING & INSTR DIAGRAM PROCESS PUMP & ASSOC. EQUIP.
MATERIAL	
SIZE	D
DRAWING NO.	200515-AP-05
REV	0
PROJECT	200515
SCALE	N.T.S.
SHEET	1OF1

P/N 1161662-RHP01

PERMEATE FROM SECOND STAGE
COMMON PERMEATE HEADER
200515-D-13

8", SCH.10, 316L SS (SEE NOTE 3)

20-FV
601

20-FV-601
8"

PORTABLE WATER FROM
PLANT SERVICE WATER SOURCE

2"(50mm), SCH.80 PVC

20-HV-601
2

SODIUM HYPOCHLORITE
FOR BIOGROWTH
PREVENTION BY OTHERS

1/2", SCH.80, CPVC

23-HV-240
1/2"

23-CV-240
1/2"

23-FV-250
1/2"

VENT
4"

20-LI
601

20-LA
601

HH
H
L
LL

AI

RANGE:
12" TO 100 IN (2540 mm)

20-LIT
601

10", SCH.10, 316L SS

20-HV-603
1-1/2" (40mm)

20-HV-602
10"

20-HV-604
8"

8", SCH.10, 316L SS

BACKPULSE WATER
TO 20-TK-201-1
200515-D-05

20-TK-601
BACKPULSE TANK
PE CONSTRUCTION
CAPACITY: 2000 GAL.
86" DIA X 100" HEIGHT

BACKPULSE WATER
TO 20-TK-201-2
200515-D-05

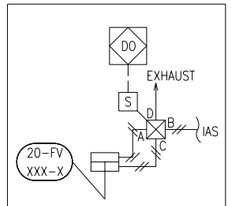

TYP. PNEUMATIC ACTUATED
VALVE CONTROL DETAIL

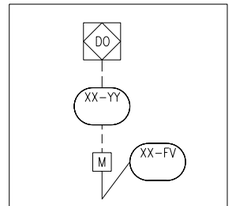

ELECTRIC OPEN/CLOSE
ONE OUTPUT

NOTES:

1. ALL DOTTED LINES/EQUIPMENT
   BY OTHERS. ----------
2. PIPE SPOOL FOR STRAINER MAINTENANCE /
   REMOVAL AND ISOLATION VALVE ACTUATION.
3. DEPENDING ON THE PRESSURE IN THE COMMON
   PERMEATE HEADER AND ITS ELEVATION WITH RESPECT TO
   THE BACKPULSE TANK, THIS LINE SIZE COULD BE REDUCED.

REV	DESCRIPTION	ECO	DWN	APVD	DATE	CHKD
0	ISSUED FOR APPROVAL		HR		04MAY11	R.P

TOLERANCES UNLESS NOTED
DECIMALS ANGLES
.X ± ±
.XX ± FRAC
.XXX ± ±

DIMENSIONS IN INCHES
DO NOT SCALE

THIRD ANGLE

DRAWN BY	AK	DATE 28APR11
CHECKED BY	R.P	DATE 28APR11
APPROVED BY		DATE
APPROVED BY		DATE

GE
Water & Process Technologies
GLOBAL HEADQUARTERS : TREVOSE, PA USA +1-215-355-3300 WWW.GEWATER.COM

THIS DRAWING, THE DESIGN AND THE PATENTS IT COVERS, IS THE PROPERTY OF GENERAL ELECTRIC COMPANY AND ITS AFFILIATES AND THE INFORMATION CONTAINED HEREIN IS PROPRIETARY INFORMATION WHICH IS NOT TO BE DISCLOSED TO ANYONE WITHOUT PRIOR WRITTEN CONSENT OF SAID COMPANY. THIS DRAWING IS TO BE USED EXCLUSIVELY FOR THE PURPOSES EXPRESSLY AUTHORIZED BY GENERAL ELECTRIC COMPANY AND ITS AFFILIATES THROUGH ITS OFFICERS AND QUALIFIED REPRESENTATIVES AND FOR NO OTHER PURPOSE. NEITHER THIS DRAWING, NOR ANY PORTION THEREOF, SHALL BE REPRODUCED WITHOUT THE PRIOR WRITTEN CONSENT OF SAID COMPANY, AND ANY SUCH REPRODUCTION SHALL BEAR THIS NOTICE.

CLIENT/JOB
EMWD PWFP
REJECT RECOVERY FACILITY

TITLE
PIPING & INSTR DIAGRAM
BACKPULSE TANK & ASSOC. EQUP

FILE MICROSTATION

MATERIAL

SIZE	DRAWING NO.	REV
D	200515-AP-07	0
PROJECT	200515	
SCALE N.T.S.	SHEET 1OF 1	

P/N 1161662-RHP01

NOTES:

1. ALL DOTTED LINES/EQUIPMENT BY OTHERS ----------
2. PROVIDE AIR GAP.
3. 5 PIPE DIAMETERS UPSTREAM, 3 PIPE DIAMETERS DOWNSTREAM, STRAIGHT PIPE RUN RECOMMENDED FOR MAXIMUM ACCURACY.
4. DEPENDING ON THE AVAILABLE PRESSURE IN THE COMMON PERMEATE HEADER AND ITS ELEVATION WITH RESPECT TO CIP TANK, THIS LINE SIZE COULD BE REDUCED.

CLEANING RETURN/DRAIN TO/FROM 20-TK-301 — 200515-AP-03

CLEANING RETURN/DRAIN TO/FROM 20-TK-201-N — 200515-AP-03

(MULTIPLE LINES)

20-FV-710 6" — 6", SCH.80, CPVC

20-HV-710-1 6" — 20-HV-712-1 1" — 20-HV-711-1 1/2" — 20-PI 701-1

20-P-701-1: 4" / 3" — 20-CV-701-1 6" — 20-HV-713-1 1/2" — 20-PI 701-2 — 20-HV-715-1 6" — 20-HV-714-1 1"

20-HV-710-2 6" — 20-HV-712-2 1" — 20-HV-711-2 1/2" — 20-PI 702-1

20-P-701-2: 4" / 3" — 20-CV-701-2 6" — 20-HV-713-2 1/2" — 20-PI 702-2 — 20-HV-715-2 6" — 20-HV-714-2 1"

20-P-701-2
CIP PUMPS
444 GPM @ 40 FT
10 HP/ 460 VAC / 3 PH / 60 HZ/ 1800 RPM

20-FIC 701 / 20-FA 701 — AI — RANGE: — 20-FIT 701 — MAG SEE NOTE 3

6", SCH.80, CPVC

20-FV-714 — 20-HV-720 — 20-HCV-720 — 20-HV-721 — 20-HCV-721

RESIDUAL CHLORINE ANALYZER RANGE: TO ppm — CR — AE 701 / AIT 701 — AI — HH H L LL — AA 701 / AI 701

AE 702 / AIT 702 — pH — AI — RANGE: 0 TO 14 — HH H L LL — AA 702 / AI 702

20-FV 715 — 20-FV-715 6"

23-HV-131 1¼" — 23-CV-130 1¼" — 23-HV-131 1¼" — F.C. — 23-FV-240 3/4" — 23-CV-240 3/4" — 23-HV-240 3/4" — 23-HV-510 1/2" — 23-CV-510 1/2" — 23-HV-511 1/2"

23-CV-530 1/2" — 23-HV-530 1/2" — 23-HV-531 1/2"

1¼", SCH.80, CPVC — SODIUM HYPROCHLORITE SOLUTION FOR RECOVERY CLEANS BY OTHERS

¾", SCH.80, CPVC — SODIUM HYPROCHLORITE SOLUTION FOR MAINTENANCE CLEANS BY OTHERS

1/2", SCH.80, CPVC — CITRIC ACID ACID SOLUTION FOR CLEANS BY OTHERS

1/2", SCH.80, CPVC — HYDROCHLORIC ACID ACID SOLUTION FOR CLEANS BY OTHERS

23-CV-710 1/2" — 23-HV-711 1/2" — 23-HV-710 1/2" — 1/2", SCH.80, CPVC — SODIUM BISULFATE FOR NEUTRALIZATION BY OTHERS

23-CV-610 1/2" — 23-HV-611 1/2" — 23-HV-610 1/2" — 1/2", SCH.80, CPVC — SODIUM HYDROXIDE FOR NEUTRALIZATION BY OTHERS

6", SCH.80, CPVC

20-FV 711 — 20-FV-711 6"

20-FV 712 — 20-FV-712 8"

PERMEATE FROM SECOND STAGE — 200515-AP-13 — 8", SCH.10, 316L SS (SEE NOTE 4)

20-KQI 701 / 20-YA 701 — DI DO DI — REMOTE (AUTO) — HEATER ON COMMAND — HEATER IS ON — 20-YL 701 — 20-TAH 701 — 20-YA 701 — RESET — 20-HS 701 — 20-HMS 701 — XX-JS-XXX — 20-TSH 701

20-FV 716 — 20-FV-716 6"

20-CV-702 6"

VENT — SEE NOTE 2 — 4"

20-TI 701 / 20-TA 701 — HH H L LL — AI — RANGE: 0 TO 122°F (50°C) — 20-TW 701 — 20-TIT 701

20-LSL 701 — 20-TSH 701 — S.P. 40°C INCREASING — 20-TW 701

20-LIC 701 / 20-LA 701 — HH H L LL — AI — RANGE: 0 TO 180 IN (4.6 M) — 20-LIT 701 — 20-HV-725

20-FV 713 — 20-FV-713 6" — 6", SCH.80, CPVC

20-TK-701
NEUTRALIZATION/ CLEANING TANK
PE CONSTRUCTION

20-H-701
CLEANING SOLUTION ELECTRIC HEATER
130 KW
CAPACITY: 9600 GAL
143" DIA X 173" HEIGHT

8", SCH.10, 316L SS — NEUTRALIZED CIP CIP SOLUTION TO SEWER/WASTE

20-KQI 701-X / 20-YA 701-X — DI DO DI AO — REMOTE (AUTO) — RUN COMMAND — RUNNING — SPEED — 20-YL 701-X — HOA — 20-HS 701-X — 20-VFD-701-X — 20-TSH 701-X — M

TYP. PUMP CONTROL DETAIL

DO — XX-YY — M — XX-FV

TYP. ELECTRIC OPEN/CLOSE ONE OUTPUT

DO — S — XX-FV — A B

TYP. SOLENOID VALVE CONTROL DETAIL

DO — S — EXHAUST — A B C — IAS — XX-FV — F.C.

TYP. SPRING CLOSE VALVE CONTROL DETAIL

REV	DESCRIPTION	ECO	DWN	APVD	DATE	CHKD
0	ISSUED FOR APPROVAL		HR		04MAY11	R.P

TOLERANCES UNLESS NOTED
DECIMALS: .X ± .XX ± .XXX ±
ANGLES ± FRAC ±
DIMENSIONS IN INCHES DO NOT SCALE
THIRD ANGLE

		DATE
DRAWN BY	AK	28APR11
CHECKED BY	R.P	28APR11
APPROVED BY		
APPROVED BY		

GE Water & Process Technologies
GLOBAL HEADQUARTERS : TREVOSE, PA USA +1-215-355-3300 WWW.GEWATER.COM

THIS DRAWING, THE DESIGN AND THE PATENTS IT COVERS, IS THE PROPERTY OF GENERAL ELECTRIC COMPANY AND ITS AFFILIATES AND THE INFORMATION CONTAINED HEREIN IS PROPRIETARY INFORMATION WHICH IS NOT TO BE DISCLOSED TO ANYONE WITHOUT PRIOR WRITTEN CONSENT OF SAID COMPANY. THIS DRAWING IS TO BE USED EXCLUSIVELY FOR THE PURPOSES EXPRESSLY AUTHORIZED BY GENERAL ELECTRIC COMPANY AND ITS AFFILIATES THROUGH ITS OFFICERS AND QUALIFIED REPRESENTATIVES AND FOR NO OTHER PURPOSE. NEITHER THIS DRAWING, NOR ANY PORTION THEREOF, SHALL BE REPRODUCED WITHOUT THE PRIOR WRITTEN CONSENT OF SAID COMPANY, AND ANY SUCH REPRODUCTION SHALL BEAR THIS NOTICE.

CLIENT/JOB	EMWD PWFP REJECT RECOVERY FACILITY
FILE	MICROSTATION
TITLE	PIPING & INSTR DIAGRAM RECIRC/NEUTRALIZATION SYSTEM
MATERIAL	

SIZE	DRAWING NO.	REV
D	200515-AP-10	0
PROJECT	200515	
SCALE N.T.S.	SHEET 1OF1	

P/N 1161662-RHP01

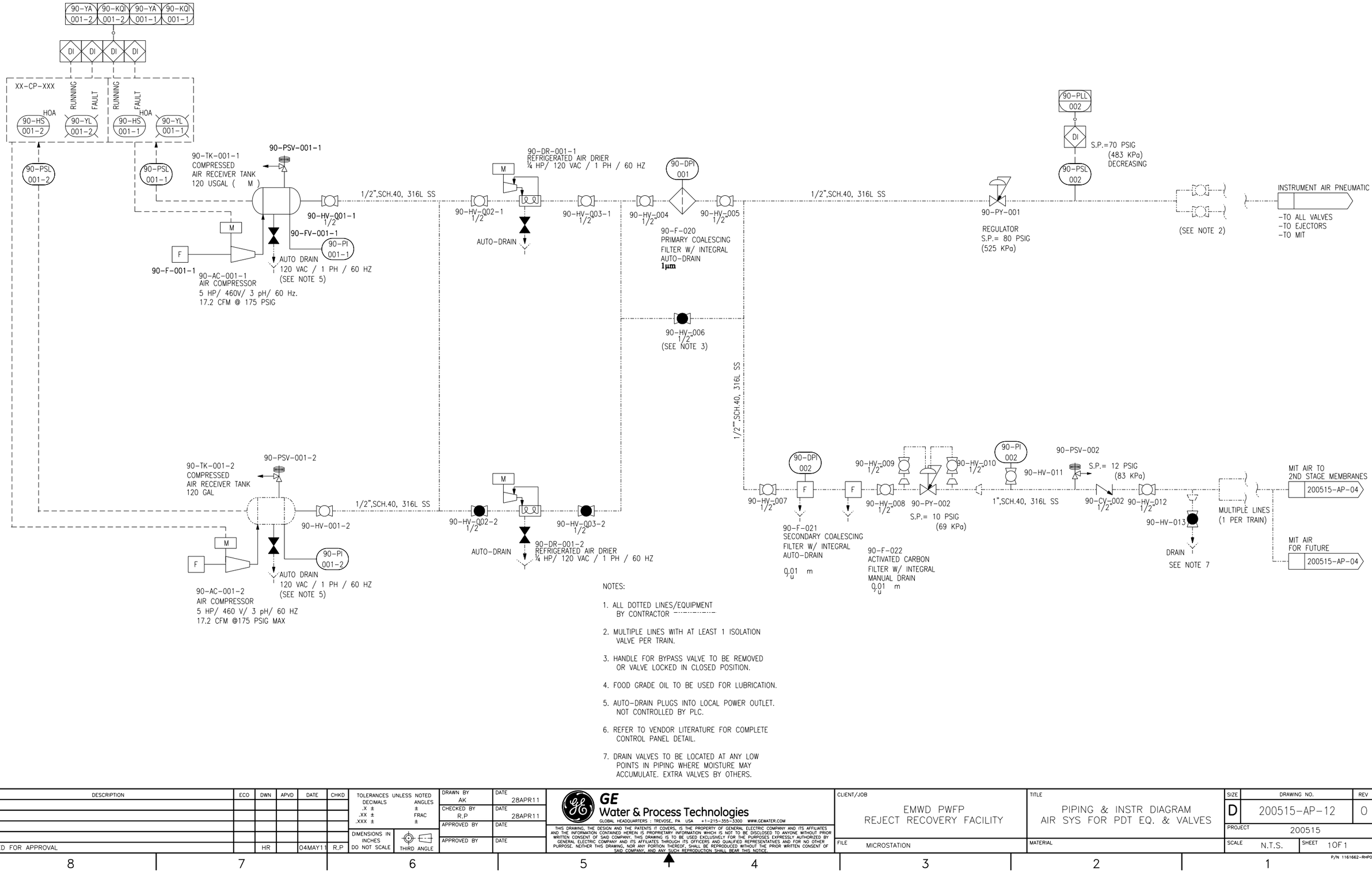

NOTES:

1. ALL DOTTED LINES/EQUIPMENT BY CONTRACTOR
2. MULTIPLE LINES WITH AT LEAST 1 ISOLATION VALVE PER TRAIN.
3. HANDLE FOR BYPASS VALVE TO BE REMOVED OR VALVE LOCKED IN CLOSED POSITION.
4. FOOD GRADE OIL TO BE USED FOR LUBRICATION.
5. AUTO-DRAIN PLUGS INTO LOCAL POWER OUTLET. NOT CONTROLLED BY PLC.
6. REFER TO VENDOR LITERATURE FOR COMPLETE CONTROL PANEL DETAIL.
7. DRAIN VALVES TO BE LOCATED AT ANY LOW POINTS IN PIPING WHERE MOISTURE MAY ACCUMULATE. EXTRA VALVES BY OTHERS.

REV	DESCRIPTION	ECO	DWN	APVD	DATE	CHKD
0	ISSUED FOR APPROVAL		HR		04MAY11	R.P

TOLERANCES UNLESS NOTED
DECIMALS ANGLES
.X ± ±
.XX ± FRAC
.XXX ± ±
DIMENSIONS IN INCHES
DO NOT SCALE
THIRD ANGLE

DRAWN BY	AK	DATE 28APR11
CHECKED BY	R.P	DATE 28APR11
APPROVED BY		DATE
APPROVED BY		DATE

GE
Water & Process Technologies
GLOBAL HEADQUARTERS : TREVOSE, PA USA +1-215-355-3300 WWW.GEWATER.COM
THIS DRAWING, THE DESIGN AND THE PATENTS IT COVERS, IS THE PROPERTY OF GENERAL ELECTRIC COMPANY AND ITS AFFILIATES AND THE INFORMATION CONTAINED HEREIN IS PROPRIETARY INFORMATION WHICH IS NOT TO BE DISCLOSED TO ANYONE WITHOUT PRIOR WRITTEN CONSENT OF SAID COMPANY. THIS DRAWING IS TO BE USED EXCLUSIVELY FOR THE PURPOSES EXPRESSLY AUTHORIZED BY GENERAL ELECTRIC COMPANY AND ITS AFFILIATES THROUGH ITS OFFICERS AND QUALIFIED REPRESENTATIVES AND FOR NO OTHER PURPOSE. NEITHER THIS DRAWING, NOR ANY PORTION THEREOF, SHALL BE REPRODUCED WITHOUT THE PRIOR WRITTEN CONSENT OF SAID COMPANY, AND ANY SUCH REPRODUCTION SHALL BEAR THIS NOTICE.

CLIENT/JOB	EMWD PWFP REJECT RECOVERY FACILITY
TITLE	PIPING & INSTR DIAGRAM AIR SYS FOR PDT EQ. & VALVES
FILE	MICROSTATION
MATERIAL	

SIZE	DRAWING NO.	REV
D	200515-AP-12	0
PROJECT	200515	
SCALE N.T.S.	SHEET 1OF 1	

P/N 1161662-RHP01

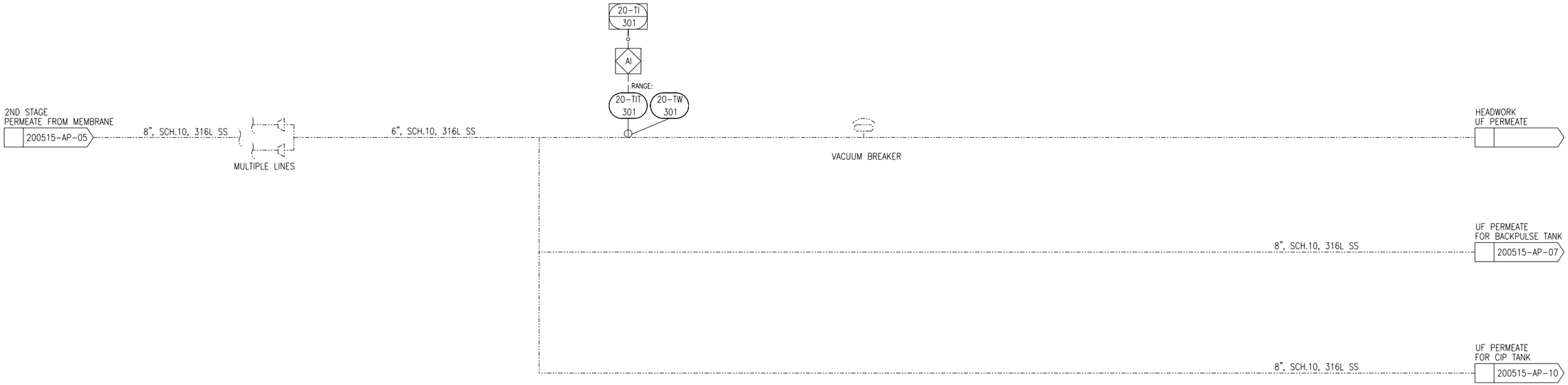

NOTE:

1. ALL DOTTED LINES/EQUIPMENT BY OTHERS

REV	DESCRIPTION	ECO	DWN	APVD	DATE	CHKD
0	ISSUED FOR APPROVAL		AK		28APR11	R,P

TOLERANCES UNLESS NOTED
DECIMALS ANGLES
.X ± ±
.XX ± FRAC
.XXX ± ±
DIMENSIONS IN INCHES DO NOT SCALE
THIRD ANGLE

DRAWN BY	AK	DATE 28APR11
CHECKED BY	R,P	DATE 28APR11
APPROVED BY		DATE
APPROVED BY		DATE

GE
Water & Process Technologies
GLOBAL HEADQUARTERS : TREVOSE, PA USA +1-215-355-3300 WWW.GEWATER.COM
THIS DRAWING, THE DESIGN AND THE PATENTS IT COVERS, IS THE PROPERTY OF GENERAL ELECTRIC COMPANY AND ITS AFFILIATES AND THE INFORMATION CONTAINED HEREIN IS PROPRIETARY INFORMATION WHICH IS NOT TO BE DISCLOSED TO ANYONE WITHOUT PRIOR WRITTEN CONSENT OF SAID COMPANY. THIS DRAWING IS TO BE USED EXCLUSIVELY FOR THE PURPOSES EXPRESSLY AUTHORIZED BY GENERAL ELECTRIC COMPANY AND ITS AFFILIATES THROUGH ITS OFFICERS AND QUALIFIED REPRESENTATIVES AND FOR NO OTHER PURPOSE. NEITHER THIS DRAWING, NOR ANY PORTION THEREOF, SHALL BE REPRODUCED WITHOUT THE PRIOR WRITTEN CONSENT OF SAID COMPANY, AND ANY SUCH REPRODUCTION SHALL BEAR THIS NOTICE.

CLIENT/JOB	EMWD PWFP REJECT RECOVERY FACILITY
FILE	MICROSTATION
TITLE	PIPING & INSTR DIAGRAM PERMEATE STORAGE TANK
MATERIAL	
SIZE	D
DRAWING NO.	200515-AP-13
REV	0
PROJECT	200515
SCALE	N.T.S.
SHEET	1OF 1

P/N 1161662-RHP01

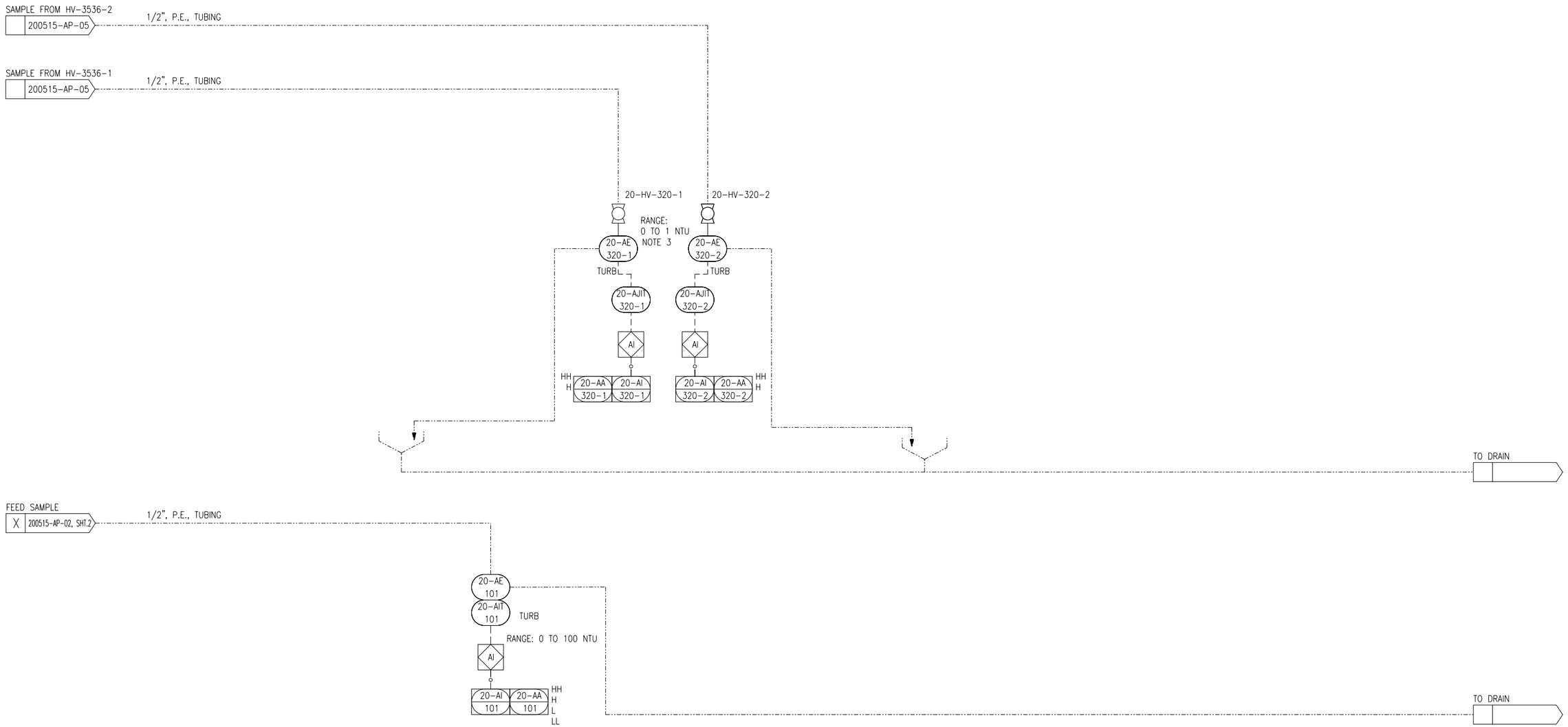

NOTES:

1. ALL DOTTED LINES/EQUIPMENT BY OTHERS
2. DRAWING TYPICAL FOR ALL TRAINS.
3. ONE DIGITAL CONTROLLER SERVICES TWO TURBIDITY SENSORS. IF AN ODD NO. OF TRAINS ARE SUPPLIED, THE LAST TRAIN WILL HAVE ONE SENSOR AND ONE CONTROLLER.

REV	DESCRIPTION	ECO	DWN	APVD	DATE	CHKD
0	ISSUED FOR APPROVAL		AK		29APR11	R.P

TOLERANCES UNLESS NOTED
DECIMALS: .X ±, .XX ±, .XXX ±
ANGLES ±
FRAC ±
DIMENSIONS IN INCHES DO NOT SCALE
THIRD ANGLE

DRAWN BY	AK
DATE	28APR11
CHECKED BY	R.P
DATE	28APR11
APPROVED BY	
DATE	
APPROVED BY	
DATE	

GE Water & Process Technologies
GLOBAL HEADQUARTERS : TREVOSE, PA USA +1-215-355-3300 WWW.GEWATER.COM

THIS DRAWING, THE DESIGN AND THE PATENTS IT COVERS, IS THE PROPERTY OF GENERAL ELECTRIC COMPANY AND ITS AFFILIATES AND THE INFORMATION CONTAINED HEREIN IS PROPRIETARY INFORMATION WHICH IS NOT TO BE DISCLOSED TO ANYONE WITHOUT PRIOR WRITTEN CONSENT OF SAID COMPANY. THIS DRAWING IS TO BE USED EXCLUSIVELY FOR THE PURPOSES EXPRESSLY AUTHORIZED BY GENERAL ELECTRIC COMPANY AND ITS AFFILIATES THROUGH ITS OFFICERS AND QUALIFIED REPRESENTATIVES AND FOR NO OTHER PURPOSE. NEITHER THIS DRAWING, NOR ANY PORTION THEREOF, SHALL BE REPRODUCED WITHOUT THE PRIOR WRITTEN CONSENT OF SAID COMPANY, AND ANY SUCH REPRODUCTION SHALL BEAR THIS NOTICE.

CLIENT/JOB	EMWD PWFP REJECT RECOVERY FACILITY
FILE	MICROSTATION
TITLE	PIPING & INSTR DIAGRAM PARTICLE COUNTER & TURBIDIMETER
MATERIAL	
SIZE	D
DRAWING NO.	200515-AP-15
REV	0
PROJECT	200515
SCALE	N.T.S.
SHEET	1OF1

P/N 1161662-RHP01

Appendix 2-C

Air Scour Blowers Technical Memorandum

MWH

BUILDING A BETTER WORLD

MEMO

618 Michillinda Avenue
Suite 200
Arcadia, CA 91007

TEL 626-796-9141
FAX 626-568-6101
www.mwhglobal.com

TO: Jeff Allred, EMWD

DATE: May 10, 2011

FROM: Jim Borchardt & Pei-Chin Low

FAX NO:

SUBJECT: RRF – Blower Comparison

At the Workshop meeting of May 9th, 2011, there was a request for a brief pros/cons analysis between the proposed use of Lamson centrifugal blowers and an alternate design using positive displacement (PD) blowers.

The pros and cons of the PD blowers are assessed, as follows:

PD BLOWERS

Pros	Cons
1. Lower installed horsepower	1. Not on preferred equipment list
2. Lower energy usage	2. Requires sound enclosures
3. Lower noise (with enclosure)	
4. Simple on/off operation (no adjustments or control loops)	
5. Lower installation and operating cost.	

Air flow from Lamson blowers is affected by ambient temperature and water level in the membrane tanks. Achieving a constant flow rate requires adjustment with a modulating inlet valve paced from a flow meter. The Lamson blowers are slightly more expensive and will require more energy, but are familiar to staff and are on the preferred equipment list.

Appendix 3-A

Site Selection Meeting Notes

(See attached CD)

Appendix 3-B

Site Survey

(See attached CD)

Appendix 3-C

Geotechnical Report (Supplemental and May 2004 investigations) and Soil Corrosivity Report

(See attached CD for May 2004 Investigation Report)

KLEINFELDER
Bright People. Right Solutions.

January 11, 2012
Project No. 110356

Mr. Ajit Bhamrah
MWH Americas, Inc.
618 Michillinda Avenue, Suite 200
Arcadia, California 91007

Subject: **Additional Geotechnical Recommendations/Report Update**
Proposed Reject Recovery Facility
Eastern Municipal Water District, Perris Water Filtration Plant
19750 Old Evans Road, Perris, California 92571

Reference: "Supplemental Geotechnical Investigation, Eastern Municipal Water District, Perris Water Filtration Plant, Proposed Reject Recovery Facility, 19750 Old Evans Road, Perris, California 92571", prepared by Kleinfelder, dated June 15, 2010

Dear Mr. Bhamrah:

Kleinfelder is pleased to present this letter summarizing additional geotechnical recommendations related to the proposed Reject Recovery Facility (RRF) project located within the Eastern Municipal Water District's (EMWD) Perris Water Filtration Plant, in Perris, California. The following sections describe project background, scope of our services, and our additional geotechnical recommendations pertaining to the design and construction of the project.

PROJECT BACKGROUND

Kleinfelder previously performed a limited geotechnical investigation and prepared a letter-report (referenced) summarizing our recommendations for the RRF to be located in a vacant area on the west side of the existing facility. Based on our recent conversations, we understand that the project has been changed since we prepared our supplemental report in 2010. The previous project scope for the proposed RRF included construction of a pre-engineering building (a small, single story, skid mounted structure supported on a concrete slab-on-grade).The new scope of this project will include design and construction of the following structures (in addition to a pre-engineering building):

Copyright 2012 Klein felder

KLEINFELDER 523 West 6th Street, Suite 620, Los Angeles, CA 90014 p | 213.622-3706 f | 213.612.4954

- 12-foot tall concrete membrane tanks that could potentially be embedded 6 feet below the surrounding grade;
- 12-foot tall concrete equalization tank that could potentially be embedded 6 feet below the surrounding grade; and
- A Chemical containment area that will be embedded 2 feet below the surrounding grade.

SCOPE OF SERVICES

Based on our understanding of site conditions and the proposed new structures described above, Kleinfelder has performed additional engineering analysis and prepared this letter report containing the following information.

- Seismic design parameters in accordance with the 2010 California Building Code (CBC).
- Allowable soil bearing pressures to be used in design of mat foundations for the proposed tanks.
- Settlement estimates relative to mat foundations for the proposed tanks and on-site soil conditions including differential seismic settlement.
- A recommended ultimate soil-to-concrete sliding friction coefficient and minimum factor of safety.
- Recommended active, passive, at-rest, and seismic lateral earth pressures for design of below-grade portions of the proposed tanks.

We note that our most recent field investigation was performed in 2010 and was not updated with confirming field investigation for this report. In preparing the recommendations contained in this report, we have assumed that soil and groundwater conditions will be similar to those encountered previously.

GEOTECHNICAL RECOMMENDATIONS

2010 CBC Seismic Design Parameters

Recommended Seismic Design Parameters per 2010 CBC are presented in Table 1.

Copyright 2012 Klein felder

KLEINFELDER 523 West 6th Street, Suite 620, Los Angeles, CA 90014 p | 213.622-3706 f | 213.612.4954

Table 1
2010 CBC Seismic Design Parameters

Site Classification (Table 1613.5.2)	D
S_s (Figure 1613.5(3)) (g)	1.5
S_1 (Figure 1613.5(4)) (g)	0.6
F_a (Table 1613.5.3(1))	1.0
F_v (Table 1613.5.3(2))	1.50
S_{MS} (Equation 16-36) (g)	1.5
S_{M1} (Equation 16-37) (g)	0.9
S_{DS} (Equation 16-38) (g)	1.0
S_{D1} (Equation 16-39) (g)	0.6

A Response Spectra based on the 2010 CBC is shown on Plate 1.

MAT FOUNDATIONS

The intent of a mat foundation is to distribute structural loads over the entire structure footprint area. For the purpose of mat design, the recommended net allowable bearing pressure is 2,500 psf with a minimum embedment depth of 12 inches below the lowest adjacent finished grade. The allowable bearing pressure applies to dead plus live loads. This value may be increased by 1/3 for short-term loading due to seismic forces. A coefficient of subgrade reaction, $k_{(1\ ft.\ x\ 1\ ft.)}$, of 255 kips per cubic foot (kcf) may be considered for design. The coefficient of subgrade reaction is not a constant for mat sizes, but depends on several factors including the length (L) and width (B) of the foundation The following formula may be used to estimate the coefficient of subgrade reaction, $k_{(B\ x\ L)}$, for a rectangular foundation having dimensions of B x L:

$$k_{(B\ x\ L)} = 170\ [(B+1)/2B]^2\ (1+B/L)$$

We recommend that the proposed mat foundation be underlain by at least 18 inches of engineered fill compacted to at least 95 percent relative compaction and extending beyond the perimeter of the foundation a minimum distance equal to the thickness of the engineered fill or at least 5 feet, whichever is greater. All areas to receive engineered fill should be scarified to a minimum depth of 8 inches, uniformly moisture-

Copyright 2012 Klein felder

KLEINFELDER 523 West 6th Street, Suite 620, Los Angeles, CA 90014 p | 213.622-3706 f | 213.612.4954

conditioned to near optimum moisture content, and compacted to at least 95 percent of the maximum dry density obtained in accordance with ASTM D1557.

Static settlements of a mat foundation constructed in accordance with the recommendations provided herein are expected to be primarily elastic with the majority of settlement occurring upon application of the load. Based on a mat pressure of approximately 2,500 psf and assuming that structural loads are uniformly distributed over the entire structure footprint area, we estimate post-construction static settlement less than 1 inch and differential settlement of less than ½ inch for non-seismic conditions. Based on results of our analyses presented previously in the referenced report, the seismically-induced settlement of saturated sandy soils due to strong ground shaking during a design-level seismic event could be on the order of 1 inch or less. Differential seismic settlement at this site is expected to be on the order of ½ inch or less. Based on our experience, these settlements are typically acceptable from the geotechnical and structural stand points and should not adversely affect the geologic stability of the subject site. To further evaluation of the structural integrity/behavior of the proposed mat foundation system and to verify that the mat is deflecting vertically and is not tilting, we recommend to model mat foundation by assuming a 1-inch of settlement at the edges and ½-inch at the center of the mat, and vice versa.

We recommend a soil-to-mat sliding friction coefficient of 0.4. A minimum sliding factor of safety of 1.0 is recommended for seismic load condition.

Lateral Earth Pressures

Active lateral earth pressures from horizontal backfills using recompacted on-site soils on walls that are free to rotate at least 0.1 percent of the wall height can be taken as equivalent to a fluid weighing of 40 pounds per cubic foot (pcf). Walls which are restrained at the top against movement or rotation should be designed for an at-rest equivalent fluid pressure of 60 pcf. These recommended earth pressures assume that drainage is provided behind the walls to prevent accumulation of hydrostatic pressures. If sufficient drainage is not provided, walls should be designed to resist an equivalent fluid pressure of 85 pcf in the active case and 95 pcf in the at-rest case. Additional loads on walls may be imposed by sloping backfill and surcharge conditions. An additional horizontal load equal to 50 percent of the surcharge load should be applied uniformly over the entire height of the wall. Sloping backfills are not anticipated at this time.

Copyright 2012 Klein felder

An increase in earth pressure due to an earthquake should be considered in the design of retaining walls. The Mononobe-Okabe seismic earth pressure method may be applied for walls that are free to rotate at least 0.1 percent of the wall height. The seismic incremental earth pressure based on Mononobe-Okabe method can be taken as an equivalent fluid weighing of 20 pounds per cubic foot (pcf). The seismic incremental pressure is in addition to the static earth pressures, and should be applied as an inverted triangular distribution with the point of application at a height of 0.6 H where H is the height of the wall.

The ultimate passive pressure available in engineered fill or undisturbed on-site soils may be taken as equivalent to the pressure exerted by a fluid weighing 450 pcf. The passive earth pressure should be limited to a maximum value of 2,500 psf. The upper one foot of passive pressure should be neglected unless the finish grade is covered by a pavement of slab. A suitable factor of safety should be applied for design purposes and should be determined by the project structural engineer. We recommend a minimum factor of safety of 1.5.

LIMITATIONS

This geotechnical letter-report has been prepared for the exclusive use of MWH Americas, Inc. and their agents for specific application to the proposed project described herein. The findings, conclusions and recommendations presented herein were prepared in accordance with generally accepted geotechnical engineering practice. No other warranty, express or implied, is made.

Recommendations contained in this letter-report are based on our previous field observations and subsurface explorations, limited laboratory tests, and our present knowledge of the proposed construction. It is possible that soil or groundwater conditions could vary from those previously encountered and between or beyond the points explored. If soil or groundwater conditions are encountered during construction that differ from those described herein, the client is responsible for ensuring that Kleinfelder is notified immediately so that we may reevaluate the recommendations of this report. If the scope of the proposed construction, including the locations of the improvements, changes from that described in this report, the conclusions and recommendations contained in this report are not considered valid until the changes are reviewed, and the conclusions of this report are modified or approved in writing, by Kleinfelder.

Copyright 2012 Klein felder

KLEINFELDER 523 West 6th Street, Suite 620, Los Angeles, CA 90014 p | 213.622-3706 f | 213.612.4954

Kleinfelder cannot be responsible for interpretation by others of this letter-report or the conditions encountered in the field. Kleinfelder must be retained so that all geotechnical aspects of construction will be monitored on a full-time basis by a representative from Kleinfelder, including site preparation, preparation of foundations, and placement of engineered fill and trench backfill. These services provide Kleinfelder the opportunity to observe the actual soil and groundwater conditions encountered during construction and to evaluate the applicability of the recommendations presented in this report to the site conditions. If Kleinfelder is not retained to provide these services, we will cease to be the geotechnical engineer of record for this project and will assume no responsibility for any potential claim during or after construction on this project. If changed site conditions affect the recommendations presented herein, Kleinfelder must also be retained to perform a supplemental evaluation and to issue a revision to our original report.

This letter-report may be used only by the client and only for the purposes stated, within a reasonable time from its issuance, but in no event later than one year from the date of the report. Land use, site conditions (both on site and off site) or other factors may change over time, and additional work may be required with the passage of time. Any party, other than the client who wishes to use this report shall notify Kleinfelder of such intended use. Based on the intended use of this report and the nature of the new project, Kleinfelder may require that additional work be performed and that an updated report be issued. Non-compliance with any of these requirements by the client or anyone else will release Kleinfelder from any liability resulting from the use of this report by any unauthorized party and the client agrees to defend, indemnify, and hold harmless Kleinfelder from any claims or liability associated with such unauthorized use or non-compliance.

Copyright 2012 Klein felder

KLEINFELDER 523 West 6th Street, Suite 620, Los Angeles, CA 90014 p | 213.622-3706 f | 213.612.4954

CLOSURE

We trust that this letter report satisfies your current needs. If you have any questions regarding this report or require additional information, please contact undersigned. We appreciate the opportunity to have been of service.

Respectively submitted,

KLEINFELDER WEST, INC.

Mariusz P. Sieradzki, Ph.D., P.E., G.E.
Principal Geotechnical Engineer

C. Eric Philips, P.E., G.E.
Senior Geotechnical Engineer

Plate 1 - Response Spectra, 2010 CBC

Copyright 2012 Klein felder

KLEINFELDER 523 West 6th Street, Suite 620, Los Angeles, CA 90014 **p** | 213.622-3706 **f** | 213.612.4954

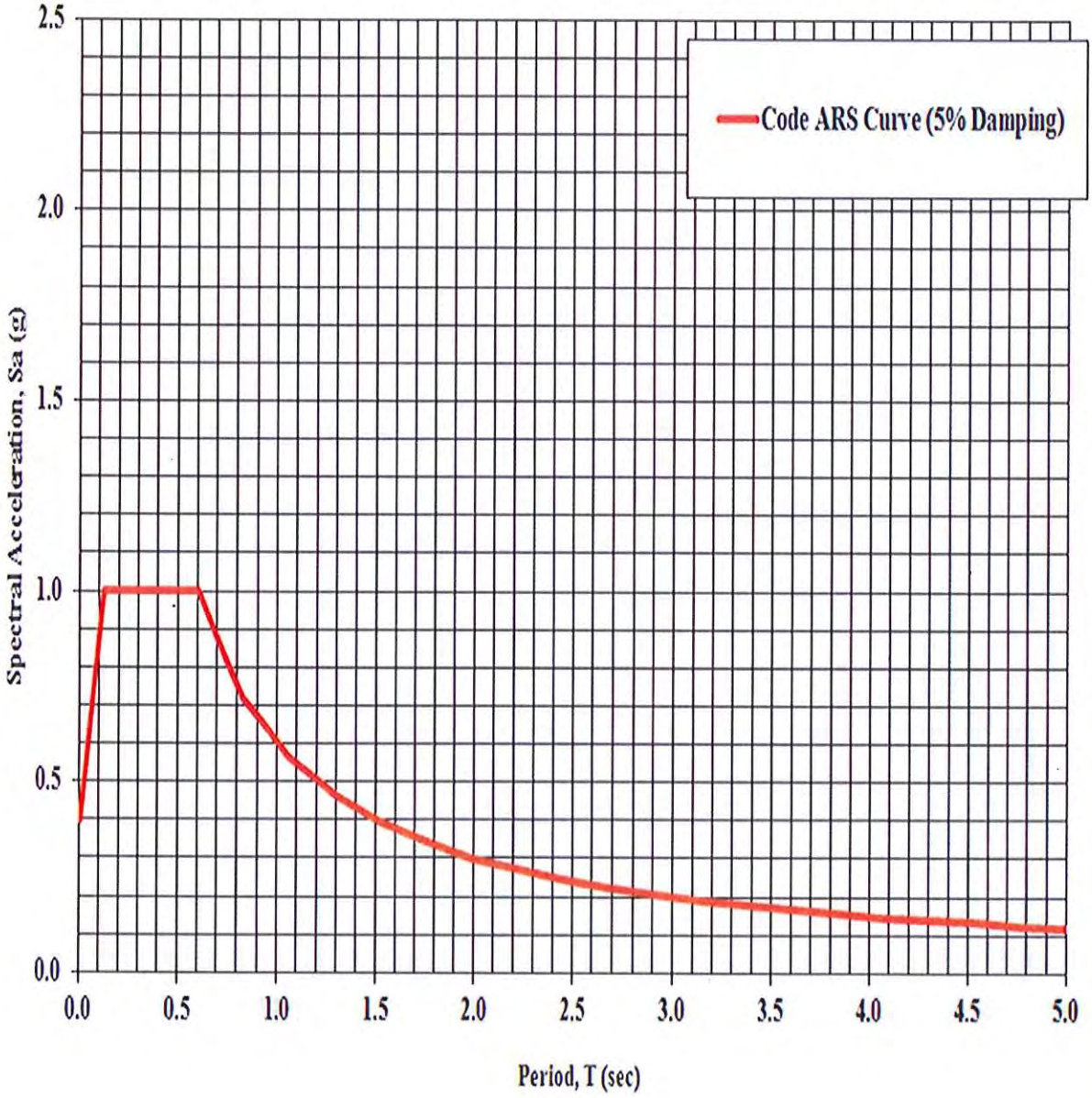

KLEINFELDER
Bright People. Right Solutions.

RESPONSE SPECTRA, 2010 CBC
Proposed Reject Recovery Facility
Perris Water Filtration Plant
19750 Old Evans Road
Perris, California

PLATE

1

June 15, 2010
Project No. 110356

Mr. Ajit Bhamrah
MWH Americas, Inc.
618 Michillinda Avenue, Suite 200
Arcadia, California 91007

Subject: **Supplemental Geotechnical Investigation**
Eastern Municipal Water District, Perris Water Filtration Plant
Proposed Reject Recovery Facility
19750 Old Evans Road, Perris, California 92571

References: **CH2MHILL (2004), "Geotechnical Recommendations for the Perris Water Filtration Plant Phase II Design," prepared for Eastern Municipal Water District, dated May, 2004**

Southern California Edison (2005), "As-built Plans for EMWD Perris Filtration Plant," dated May, 2005.

Dear Mr. Bhamrah:

As requested, Kleinfelder performed a supplemental geotechnical investigation at the site of the proposed Reject Recovery Facility (RRF – Project) within the Eastern Municipal Water District's (EMWD) Perris Water Filtration Plant in Perris, California. The purpose of our supplemental geotechnical investigation was to evaluate engineering characteristics of the near surface soils in the in the vicinity of the Project and provide supplemental recommendations regarding geotechnical aspects of design and construction of the project as appropriate. Based on the field and laboratory investigation we performed, it is our professional opinion that the recommendations presented in the referenced geotechnical report by CH2MHILL are valid for design and construction of the subject project unless otherwise stated herein.

PROJECT BACKGROUND AND DESCRIPTION

From the EMWD request for proposal for Membrane System and Services, dated April 13, 2010, "Perris Water Filtration Plant (PWFP) is an existing water treatment facility with capacity of 20 million gallons per day (MGD). PWFP is located at 19750 Old Evans Road near Rider Street, in Perris, California, in the County of Riverside. A separate project is underway to provide upgrades to PWFP to increase the capacity to 24 MGD. The anticipated construction schedule for the upgrades is six to ten months with a commencement date of summer 2010. The location of the proposed project is presented on Plate 1, Vicinity Map.

Copyright 2010 Kleinfelder

KLEINFELDER 523 West 6th Street, Suite 620, Los Angeles, CA 90014 **p |** 213.622-3706 **f |** 213.612.4954

EMWD retained CH2MHILL in 2004 to perform geotechnical investigations for design and construction of the PWFP upgrades mentioned above. During initial geotechnical investigations previously performed by CH2MHILL, four soil borings, H-1 thru H-4, were advanced to depths ranging from 11.5 to 51.5 feet below surface grade near the eastern half of the facility. CH2MHILL provided geotechnical recommendations for the PWFP upgrades in their report dated May, 2004, referenced above.

"The proposed RRF project involves the preliminary and final design of a low pressure membrane system and associated facilities to treat reject water from the existing PWFP facility. The RRF capacity will be up to 1.2 MGD, with 1.0 MGD initially installed. The treated reject water will be returned to the head of the plant and blended with the raw water. Concentrate from the RRF will be discharged to the sewer system.

The proposed site for the RRF is located in a vacant area on the west side of the existing PWFP. The vacant area is approximately 2,640 square feet in plan. It is our understanding through discussions with MWH Americas, Inc. that the proposed RRF will be located in this vacant area and will consist of a small, single-story, skid mounted structure and will be supported on a concrete slab-on-grade. Anticipated buried pipes will consist of the reject line from the PWFP facility, return line to the PWFP facility, tie-in to the sewer system, and electrical conduit. Piping material is anticipated to consist of PVC or C900 (plastic) material or possibly ductile iron with an appropriate coating(s). Existing site grades are anticipated to be near proposed finished grades. We anticipate less than two feet of cuts and fills in order to grade the site.

PURPOSE AND SCOPE OF WORK

The purpose of our scope of services was to evaluate surface and subsurface conditions in the vicinity of the proposed RRF and provide a letter report containing supplemental recommendations regarding the geotechnical aspects of design and construction of the project, as appropriate. Our study included field exploration, laboratory testing, engineering analysis, and preparation of this letter report. Specifically, our scope included:

- A site reconnaissance to locate exploratory borings and coordinate avoidance of known underground utilities through Underground Service Alert (USA).
- A supplemental subsurface exploration program consisting of two exploratory borings. The borings were drilled to depths on the order of 50 feet below existing ground surface (bgs). A Kleinfelder staff engineer, under supervision of a Registered Geotechnical Engineer, logged subsurface materials encountered within the explorations in general accordance with ASTM D2488. Bulk samples, disturbed and relatively undisturbed samples of the soils were collected from the auger flights and using California samplers.
- Laboratory testing was performed on selected samples obtained during exploration to evaluate pertinent engineering properties, including strength, density, moisture content, soil characteristics for classification, electrical resistivity, pH, and water soluble sulfates.

Copyright 2010 Kleinfelder

KLEINFELDER 523 West 6th Street, Suite 620, Los Angeles, CA 90014 **p |** 213.622-3706 **f |** 213.612.4954

- Preparation of this supplemental geotechnical investigation letter report including:
    - Vicinity map (Plate 1) and Site plan (Plate 2) showing the approximate boring locations;
    - A discussion of our supplemental field exploration/tests and near surface materials encountered at the locations of our supplemental explorations;
    - Logs of the exploratory borings and results of laboratory tests performed;
    - Conclusions regarding the applicability of the referenced report by CH2MHILL dated May, 2004; and
    - Coordinating the services of Schiff Associates, Consulting Corrosion Engineers, who have prepared a corrosion report for the Project.

FIELD EXPLORATION

Our supplemental subsurface exploration included drilling two borings using a Mobile B-61 truck-mounted drill rig equipped with an 8-inch hollow stem auger, provided by California Pacific Drilling of Calimesa, California. The depths of our test holes were on the order of 50 feet below ground surface (bgs). (We planned to drill one boring to approximately 50 feet bgs and one boring to approximately 20 feet bgs. We found it necessary to extend the proposed 20-foot boring to 50 feet bgs. The 20-foot boring was extended in order to re-sample soil from approximately 45 to 50 feet due to poor recovery at these sample intervals in our planned 50-foot boring). The borings were backfilled with soil cuttings. The locations of the supplemental borings are presented on Plate 2, Boring Location and Site Plan.

A Kleinfelder engineer supervised field operations and logged the borings. Selected bulk and drive samples were retrieved, sealed and transported to our laboratory for further evaluation. Our typical sampling interval within the borings was every 5 feet. We intentionally did not collect samples from approximately 20 to 40 feet in Boring B-2, to expedite resampling at depth intervals of approximately 45 feet and 50 feet as described above. Boring B-2 was the planned 20-foot deep boring described above. A Modified California sampler was used to obtain drive samples of the soil encountered. This sampler consists of a 3-inch O.D., 2.4-inch I.D. split barrel shaft that is pushed or driven a total of 18-inches into the soil at the bottom of the boring. The soil was retained in six 1-inch brass rings for laboratory testing. An additional 2 inches of soil from each drive remained in the cutting shoe and was usually discarded after visually classifying the soil. The sampler was driven using a 140-pound hammer falling 30 inches. The total number of blows required to drive the sampler the final 12 inches is termed blow count and is recorded on the Logs of Borings.

The Logs of Borings are attached to this letter and are presented as Plates A-2 and A-3. An explanation to the logs is presented as Plates A-1a and A-1b. The Logs of Borings describe the earth materials encountered, samples obtained and show field and laboratory tests performed. The logs also show the location, boring number, drilling date and the name of the drilling subcontractor. The borings were logged by a

Copyright 2010 Kleinfelder

Kleinfelder engineer using the Unified Soil Classification System, ASTM D2488. The boundaries between soil types shown on the logs are approximate because the transition between different soil layers may be gradual.

LABORATORY TESTING

Laboratory testing was performed on representative samples of soil collected from our borings to substantiate field classifications and provide engineering parameters for geotechnical design. Laboratory testing included the following.

- In-Situ Moisture Content
- In-Situ Dry Unit Weight
- Sieve Analysis
- Expansion Index
- Atterberg Limits
- Direct Shear
- Collapse Potential
- Corrosion Potential (by Schiff Associates)

Geotechnical laboratory testing was performed in accordance with one of the following references:

- ASTM Standards for Soil Testing, latest revisions
- California Test Methods 532 and 643
- California Test Method 417
- California Test Method 422

Laboratory Moisture and Dry Unit Weight Determinations

Moisture content and dry unit weight tests were performed on a number of samples recovered from the borings. Moisture contents were determined in general accordance with ASTM Test Method D 2216; dry unit weight was calculated using the entire weight of the samples collected. Results of these tests are presented on the logs of borings.

Sieve Analysis

Sieve analyses was performed on selected samples to evaluate the grain size distribution characteristics of the soils and to aid in their classification. Tests were performed in general accordance with ASTM Test Method D422. Plots of the sieve analysis tests are presented on Plate B-1, Grain Size Distribution.

Atterberg Limits

Atterberg limits testing was performed on selected samples to evaluate plasticity characteristics and to aid in the classification of the soil. The tests were performed in accordance with ASTM Standard Test Method D4318 and are summarized on Plate B-2, Plasticity Index.

Copyright 2010 Kleinfelder

KLEINFELDER 523 West 6th Street, Suite 620, Los Angeles, CA 90014 **p |** 213.622-3706 **f |** 213.612.4954

Direct Shear

Direct shear testing was performed on a selected, relatively undisturbed sample, to evaluate the soil shear strength parameters in general accordance with ASTM Standard Test Method D3080. The soil samples were soaked to near saturation prior to testing. The stress-strain plots of the direct shear tests are presented on Plate B-3, Direct Shear.

Collapse Potential

Collapse potential testing was performed on a selected, relatively undisturbed sample, to evaluate the magnitude of one-dimensional collapse that occurs when unsaturated soils are inundated with fluid. The soil sample was soaked to near saturation at a load of approximately 2 ksf. The testing was performed in accordance with ASTM Standard Test Method D5333 and is summarized on Plate B-4, Collapse Potential.

Expansion Index

Expansion index testing was performed on a selected sample to evaluate expansion characteristics of the near surface soils. The testing was performed in accordance with ASTM Standard Test Method D4829 and is summarized below in Table 1, Expansion Index Test.

Table 1
Expansion Index Test

Sample Location	Sample Depth (ft)	Initial Moisture (%)	Compacted Dry Density (pcf)	Final Moisture (%)	Volumetric Swell (in)	Expansion Index	Expansion Potential
B-1	0-5	6.6	119.9	12.2	0.0000	0	Very Low

SUBSURFACE CONDITIONS

Soil conditions in the vicinity of the project site are generally consistent with the materials presented on the soil boring logs by CH2MHILL. We encountered approximately 1 to 3 feet of artificial fill underlain by alluvial soils. The fill materials encountered in our borings consisted of silty sand with some fine to coarse gravel. The alluvial soils encountered below the fill soils, with drive sampling beginning at approximately 5 feet bgs, consisted predominantly of dense to very dense, fine to coarse grained silty and clayey sand with occasional interbedded layers of poorly graded sand. SPT sampling indicates medium dense sandy material at intervals of approximately 25, 30, and 35 feet bgs. In-situ moisture and dry density test results ranged from approximately 7.6 percent to approximately 11.7 percent, and approximately 126 pounds per cubic foot (pcf) to approximately 131 pcf, respectively.

Copyright 2010 Kleinfelder

KLEINFELDER 523 West 6th Street, Suite 620, Los Angeles, CA 90014 **p |** 213.622-3706 **f |** 213.612.4954

The upper approximately 6 to 10 feet of soils observed from sampling borings B-1 and B-2 consisted of silty sand. Based on the results of laboratory testing and our observations while drilling, the silty sand encountered is considered to have a very low expansion potential. Below the near surface silty sand layer, an approximately 10-foot thick layer of clayey sand was observed in our borings. One sample collected at a depth of approximately 6 feet bgs in Boring B-1 indicated approximately 1 percent swell under an overburden pressure of approximately 2,000 pounds per square foot (psf) rather than collapse. Based on the results of our laboratory testing and observations while drilling, this clayey sand layer has a potential for volumetric change if exposed to cyclic wetting and drying.

Ground water was encountered at depths of approximately 38.5 and 33.5 feet bgs in borings B-1 and B-2, respectively. According to the State of California (CDMG, 1997), the historic high groundwater level at the site has been mapped at a depth of approximately 30 feet bgs. Fluctuations of the groundwater level, localized zones of perched water, and soil moisture content should be anticipated during and following the rainy season.

2007 CBC SEISMIC DESIGN PARAMETERS

Based on our review of the referenced geotechnical report by CH2MHILL (2004), recommendations for seismic analysis was based on the 2001 California Building Code (CBC). Subsequent to CH2MHILL's report published in 2004, the 2007 CBC was adopted by the engineering community as standard of practice in January 2008. We reviewed the seismic parameters presented by CH2MHILL (2004) and performed an EQFault database search of known active and potentially active faults within the vicinity of the Project. Our review and database search resulted in generally consistent findings as presented by CH2MHILL (2004). Our findings indicate the San Jacinto Valley fault, capable of generating a maximum credible earthquake (MCE) of magnitude of 6.9, located approximately 7.4 miles from the site. The results of our review are presented in the conclusions and recommendations of this letter report. Recommended parameters presented herein are based on the U.S. Geological Survey Ground Motion Parameters computer program and the approximate location of the site at 33.83264^{o} N (latitude) and -117.201049^{o} W (longitude).

LIQUEFACTION

The term liquefaction describes a phenomenon in which saturated, cohesionless soils temporarily lose shear strength (liquefy) due to increased pore water pressures induced by strong, cyclic ground motions during an earthquake. Structures founded on or above potentially liquefiable soils may experience bearing capacity failures due to the temporary loss of foundation support, vertical settlements (both total and differential), and lateral spreading. The factors known to influence liquefaction potential include soil type, relative density, grain size, confining pressure, depth to groundwater, and the intensity and duration of the seismic ground shaking. The cohesionless soils most susceptible to liquefaction are loose, saturated sands and some silts. Because the site is considered to be located in a high liquefaction risk zone in Riverside County Land Information System

Copyright 2010 Kleinfelder

website, and the combination of ground water and presence of sandy alluvial deposits encountered at the site, we performed liquefaction analyses to evaluate liquefaction potential and assess the potential for seismically induced settlement at the site. We have presented a discussion of our liquefaction analysis and results in the conclusions and recommendations section of this letter report.

CONCLUSIONS AND RECOMMENDATIONS

It is our professional opinion that the recommendations presented in the referenced geotechnical report by CH2MHILL are valid for design and construction of the subject project unless otherwise stated herein. Based on the results of our field exploration, laboratory testing, and geotechnical analyses performed for this study, it is our professional opinion that the proposed project is geotechnically feasible, provided the conclusions and recommendations presented below are incorporated into the project design and construction.

2007 CBC Seismic Design Parameters

According to the 2007 CBC, every structure, and portion thereof, including non-structural components that are permanently attached to structures and their supports and attachments, shall be designed and constructed to resist the effects of earthquake motions in accordance with ASCE 7-05 (ASCE, 2006), excluding Chapter 14 and Appendix 11A. The seismic design category for a structure may be determined in accordance with Section 1613 of the 2007 CBC or ASCE 7-05. We have estimated settlement due to liquefaction to be on the order of 1 inch or less as discussed in the next section of this letter report. According to the 2007 CBC, sites subject to liquefaction should be classified as Site Class F, which requires a site response analysis. However, ACSE 7-05, which is the basis for the 2007 CBC, suggests that for a short period (less than ½ second) structure on liquefiable soils, Site Class D or E may be used instead of Site Class F to estimate design seismic loading on the structure. The selection of Site Class D or E is based on the assessment of the site soil profile assuming no liquefaction. We understand that the period of the proposed structures will be less than ½ second; therefore, the soil profile can be classified as Site Class D. CBC (2007) Seismic Design Parameters presented below are applicable for the subject project.

Table 2
2007 CBC Seismic Design Parameters

Site Classification (Table 1613A.5.2)	D
S_s (Figure 1613.5(3)) (g)	1.5
S_1 (Figure 1613.5(4)) (g)	0.6
F_a (Table 1613A.5.3(1))	1.0
F_v (Table 1613A.5.3(2))	1.50

Copyright 2010 Kleinfelder

KLEINFELDER 523 West 6th Street, Suite 620, Los Angeles, CA 90014 **p |** 213.622-3706 **f |** 213.612.4954

Table 2
2007 CBC Seismic Design Parameters

Site Classification (Table 1613A.5.2)	D
S_{MS} (Equation 16A-37) (g)	1.5
S_{M1} (Equation 16A-38) (g)	0.9
S_{DS} (Equation 16A-39) (g)	1.0
S_{D1} (Equation 16A-40) (g)	0.6

Liquefaction

To assess the potential for liquefaction of subsurface soils at the site, we used the simplified liquefaction analysis procedure recommended by NCEER (Youd and Idriss, 1997, 2001). For estimating the resulting ground settlements, we used the method proposed by Tokimatsu and Seed (1987) to estimate the amount of volumetric compaction or settlement during an earthquake.

According to the State of California (CDMG, 1997), the historic high groundwater level at the site has been mapped at a depth of approximately 30 feet bgs. Ground water was encountered at depths of approximately 38.5 and 33.5 feet bgs in borings B-1 and B-2, respectively. We used a groundwater depth of 30 feet bgs for our liquefaction analyses.

According to Section 1802 of the 2007 CBC, the peak ground acceleration (PGA) used in the liquefaction analysis may be estimated by dividing the SD_S presented in the table above, by 2.5. A PGA of 0.4g with an earthquake magnitude of 6.9 was used as a design-level seismic event for our liquefaction analyses.

We evaluated liquefaction potential at the site using the SPT and equivalent-SPT data. Based on boring data and our engineering analyses, it is our opinion that medium dense sandy soils below groundwater could be subject to liquefaction in the event of a major earthquake occurring on a nearby fault. Based on our analyses, we estimate that seismically-induced settlement of saturated sandy soils due to strong ground shaking during a design-level seismic event could be on the order of 1 inch or less. Because of variations in distribution, density, and confining conditions of the soils, seismic settlement is generally non-uniform and structural damage can occur due to differential settlement. The amount of differential settlement will depend on the uniformity of the subsurface profile. For relatively uniform subsurface conditions, differential settlement on the order of 50 percent of the total seismic settlement could be expected. For highly heterogeneous sites, differential settlements on the order of 75 to 100 percent of the total seismic settlement could be expected. Based on the soils encountered in our two test boring and in the previous borings by CH2M Hill, differential seismic settlement at this site is expected to be on the order of 0.5 inches or less over a horizontal distance of 30 feet.

Copyright 2010 Kleinfelder

KLEINFELDER 523 West 6th Street, Suite 620, Los Angeles, CA 90014 **p |** 213.622-3706 **f |** 213.612.4954

Expansive Soils

Based on our understanding of the subject project as presented above and the results of our fieldwork and laboratory testing, we do not anticipate that expansive soils will pose a significant impact the proposed project. However, soil conditions often vary between locations explored. Our conclusions and recommendations are based on limited information. Therefore, the conclusions and recommendations presented herein are based on implementation of the recommendations presented below and the following limitations section.

Additional Services

We recommend that Kleinfelder be given an opportunity to review the plans and specifications for this project before they are finalized. Such a review allows us to verify that our recommendations and concerns have been adequately incorporated in the design. It also gives us an opportunity to discuss those recommendations and concerns with other members of the design team so that we can clear up misunderstandings or ambiguities before the project reaches the construction stage. If we are not accorded the privilege of performing this review, we can assume no responsibility for misinterpretation of our recommendations.

The construction process is an integral design component with respect to the geotechnical aspects of a project. Because geotechnical engineering is an inexact science due to the variability of natural processes, and because we sample only a limited portion of the soils affecting the performance of the proposed structures, unanticipated or changed conditions can be disclosed during construction. Proper geotechnical observation and testing during construction is imperative to allow the geotechnical engineer the opportunity to verify assumptions made during the design process. Therefore, we recommend that Kleinfelder be retained during the construction of the proposed improvements to observe compliance with the design concepts and geotechnical recommendations, and to allow design changes in the event that subsurface conditions or methods of construction differ from those assumed while completing this study.

Our services are typically needed at the following stages of grading.

- Observation during overexcavation and recompaction;
- Observation during foundation excavations;
- Observation and testing of construction materials; and
- Observation and testing during utility trench excavation and backfill.

Copyright 2010 Kleinfelder

KLEINFELDER 523 West 6th Street, Suite 620, Los Angeles, CA 90014 **p |** 213.622-3706 **f |** 213.612.4954

LIMITATIONS

This geotechnical study has been prepared for the exclusive use of MWH Americas, Inc. and their agents for specific application to the proposed project described herein. The findings, conclusions and recommendations presented in this report were prepared in accordance with generally accepted geotechnical engineering practice. No other warranty, express or implied, is made.

The scope of services was limited to a background data review, field exploration, laboratory testing and analysis described above. It should be recognized that definition and evaluation of subsurface conditions are difficult. Judgments leading to conclusions and recommendations are generally made with incomplete knowledge of the subsurface conditions present due to the limitations of data from field studies. The conclusions of this assessment are based on our field exploration and laboratory testing programs, and engineering analyses.

Kleinfelder offers various levels of investigative and engineering services to suit the varying needs of different clients. Although risk can never be eliminated, more detailed and extensive studies yield more information, which may help understand and manage the level of risk. Since detailed study and analysis involves greater expense, our clients participate in determining levels of service, which provide information for their purposes at acceptable levels of risk. The client and key members of the design team should discuss the issues covered in this report with Kleinfelder, so that the issues are understood and applied in a manner consistent with the owner's budget, tolerance of risk and expectations for future performance and maintenance.

Recommendations contained in this report are based on our field observations and subsurface explorations, limited laboratory tests, and our present knowledge of the proposed construction. It is possible that soil or groundwater conditions could vary between or beyond the points explored. If soil or groundwater conditions are encountered during construction that differ from those described herein, the client is responsible for ensuring that Kleinfelder is notified immediately so that we may reevaluate the recommendations of this report. If the scope of the proposed construction, including the locations of the improvements, changes from that described in this report, the conclusions and recommendations contained in this report are not considered valid until the changes are reviewed, and the conclusions of this report are modified or approved in writing, by Kleinfelder.

The scope of services for this subsurface exploration and geotechnical report did not include environmental assessments or evaluations regarding the presence or absence of wetlands or hazardous substances in the soil, surface water, or groundwater at this site.

Copyright 2010 Kleinfelder

Kleinfelder cannot be responsible for interpretation by others of this report or the conditions encountered in the field. Kleinfelder must be retained so that all geotechnical aspects of construction will be monitored on a full-time basis by a representative from Kleinfelder, including site preparation, preparation of foundations, and placement of engineered fill and trench backfill. These services provide Kleinfelder the opportunity to observe the actual soil and groundwater conditions encountered during construction and to evaluate the applicability of the recommendations presented in this report to the site conditions. If Kleinfelder is not retained to provide these services, we will cease to be the geotechnical engineer of record for this project and will assume no responsibility for any potential claim during or after construction on this project. If changed site conditions affect the recommendations presented herein, Kleinfelder must also be retained to perform a supplemental evaluation and to issue a revision to our original report.

This report, and any future addenda or reports regarding this site, may be made available to bidders to supply them with only the data contained in the report regarding subsurface conditions and laboratory test results at the point and time noted. Bidders may not rely on interpretations, opinion, recommendations, or conclusions contained in the report. Because of the limited nature of any subsurface study, the contractor may encounter conditions during construction which differ from those presented in this report. In such event, the contractor should promptly notify the owner so that Kleinfelder's geotechnical engineer can be contacted to confirm those conditions. We recommend the contractor describe the nature and extent of the differing conditions in writing and that the construction contract include provisions for dealing with differing conditions. Contingency funds should be reserved for potential problems during earthwork and foundation construction.

This report may be used only by the client and only for the purposes stated, within a reasonable time from its issuance, but in no event later than one year from the date of the report. Land use, site conditions (both on site and off site) or other factors may change over time, and additional work may be required with the passage of time. Any party, other than the client who wishes to use this report shall notify Kleinfelder of such intended use. Based on the intended use of this report and the nature of the new project, Kleinfelder may require that additional work be performed and that an updated report be issued. Non-compliance with any of these requirements by the client or anyone else will release Kleinfelder from any liability resulting from the use of this report by any unauthorized party and the client agrees to defend, indemnify, and hold harmless Kleinfelder from any claims or liability associated with such unauthorized use or non-compliance.

Copyright 2010 Kleinfelder

KLEINFELDER 523 West 6th Street, Suite 620, Los Angeles, CA 90014 **p |** 213.622-3706 **f |** 213.612.4954

CLOSURE

We trust that this letter report satisfies your current needs. If you have any questions regarding this report or require additional information, please contact undersigned. We appreciate the opportunity to have been of service.

Respectively submitted,

KLEINFELDER WEST, INC.

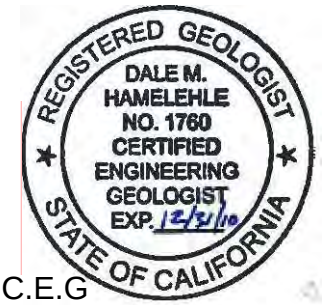

C. Eric Philips, P.E., G.E.
Senior Geotechnical Engineer

Dale Hamelehle, P.G., C.E.G
Project Manager

Attachments: References
Plate 1 – Vicinity Map
Plate 2 – Boring Location and Site Plan
Plate A-1 – Legend to Logs
Plates A-2 and A-3 - Logs of Borings B-1 and B-2
Plate B-1 – Grainsize Distribution
Plate B-2 – Plasticity Index Test
Plate B-3 – Direct Shear
Plate B-4 – Collapse Potential
Corrosion Study by Schiff Associates, dated June 10, 2010

Copyright 2010 Kleinfelder

KLEINFELDER 523 West 6th Street, Suite 620, Los Angeles, CA 90014 **p |** 213.622-3706 **f |** 213.612.4954

REFERENCES

REFERENCES

- American Society for Testing and Materials (ASTM). Annual Book of ASTM Standards.

- The Riverside County Land Information System, http://www3.tima.co.riverside.ca.us/pa/rclis/index.html

- Blake, Thomas F., 2000, EQFAULT: "A Computer Program for the Deterministic Prediction of Peak Horizontal Accelerations from Digitized California Faults."

- Boore, D.M., and Atkinson G. M., 2008, "Ground-Motion Prediction Equations for the Average Horizontal Component of PGA, PGV, and 5%-Damped PSA at Spectral Periods between 0.01 s and 10.0 s," Earthquake Spectra, Vol. 24, Issue No. 1, pp. 99-138, February 2008.

- Bryant, W.A., and Hart, E.W., 2007, Fault-rupture hazard zones in California - Alquist- Priolo Earthquake Fault Zoning Act with index to Earthquake Fault Zones maps: California Geological Survey Special Publication 42 (Interim Revision), 42 p., California Geological Survey web page ftp://ftp.consrv.ca.gov/pub/dmg/pubs/sp/Sp42.pdf.

- California Building Code (2007), California Code of Regulations, Title 24, Part 2, Volume 2.

- California Department of Water Resources (DWR), 2008, website: http://well.water.ca.gov/

- California Division of Mines and Geology (CDMG), 2000, Digital database of faults from the fault activity map of California and adjacent areas: California Department of conservation, Division of Mines and Geology DMG CD 2000-006.

- California Geological Survey, 2003, Seismic Shaking Hazard Maps, Peak Ground Acceleration, Web Site: http://www.consrv.ca.gov/cgs/rghm/psha/pga.htm.

- Campbell, K.W., and Bozorgnia, Y., 2008, "NGA Ground Motion Model for the Geometric Mean Horizontal Component of PGA, PGV, PGD and 5% Damped Linear Elastic Response Spectra for Periods Ranging from 0.01 to 10 s", Earthquake Spectra, Vol. 24, Issue No. 1, pp. 139-171, February 2008.

- Cao, T., M.D. Petersen, and Reichle, M.S., 1996, Seismic Hazard Estimate from Background Seismicity in Southern California, Bulletin of the Seismological Society of America, Vol. 86, 1372-1381.

Copyright 2010 Kleinfelder

KLEINFELDER 523 West 6th Street, Suite 620, Los Angeles, CA 90014 **p |** 213.622-3706 **f |** 213.612.4954

- CH2MHILL (2004), “Geotechinal Recommendations for the Perris Water Filtration Plant Phase II Design, ”prepared for Eastern Municipal Water District, dated May, 2004

- Chiou, B.S.-J., and Youngs, R.R, 2008, “An NGA Model for the Average Horizontal Component of Peak Ground Motion and Response Spectra,” Earthquake Spectra, Vol. 24, Issue No. 1, pp. 173-215, February 2008.

- Jennings, C.W., 1994, Fault Activity Map of California and Adjacent Areas with Locations and Ages of Recent Volcanic Eruptions, California Division of Mines and Geology, Geological Data Map No. 6, scale 1:750,000.

- Kennedy, M.P., 1977, Recency and Character of Faulting along the Elsinore Fault Zone in Southern Riverside County, California, California Division of Mines and Geology, Special Report 131

- Morton, D.M., 2003, Preliminary Geologic Map of the Perris 7.5’ Quadrangle, Riverside County, California, United States Geological Survey, Open File Report OF-03-270, scale 1:24000, version 1.0.

- Morton, D.M., and Miller, F.K., 2006, Geologic Map of the San Bernardino and Santa Ana 30’ X 60’ Quadrangle, California, United States Geological Survey, Open File Report OF-2006-1217, scale 1:100000.

- Norris, Robert M. and Webb, Robert W., 1990, Geology of California, 2nd Edition, John Wiley & Sons, 541 p.

- Petersen, M.D., Bryant, W.A., Cramer, C.H., Cao, T., Reichle, M.S., Frankel, A.D., Lienkaernper, J.J., McCrory, P .A., and Schwartz, D.P., 1996, Probabilistic Seismic Hazard Assessment for the State of California: Division of Mines and Geology Open File Report 96-08, p.59 fault parameters are available at web site: http://www.consrv.ca.gov/dmgishezp/fltindex.html.

- Petersen, M.D. et al, 1999, Seismic Shaking Hazards Maps of California, California Division of Mines and Geology Map She

- Southern California Edison (2005), “As-built Plans for EMWD Perris Filtration Plant, “dated May, 2005

- Sewel, R.T., 2001, A Short Course on Understanding and Applying Probabilistic Seismic Hazard Analysis (PSHA), Sponsored by Association of Engineering Geologists (AEG), Southern California Section and Southern California Earthquake Section (SCEC), Held at University of Southern California (USC).
- Standard Specifications for Public Works Construction (The “Greenbook”), 2009. Published by BNi Building News, Vista California.

Copyright 2010 Kleinfelder

KLEINFELDER 523 West 6th Street, Suite 620, Los Angeles, CA 90014 **p |** 213.622-3706 **f |** 213.612.4954

- Uniform Building Code (UBC), 2001.

- Google Earth Pro, San Diego Office.

- Youd, T.L., and Idriss, I.M., et al., 2001, Liquefaction Resistance of Soils: Summary Report from the 1996 NCEER and 1998 NCEER/NSF Workshops on Evaluation of Liquefaction Resistance of Soils, October

- Western Municipal Water District, 2008, Cooperative Well Measuring Program, Covering the Upper Santa Ana River Watershed, San Jacinto Watershed, and Santa Margarita Watershed, Spring 2008, dated July 2008.

Copyright 2010 Kleinfelder

KLEINFELDER 523 West 6th Street, Suite 620, Los Angeles, CA 90014 **p |** 213.622-3706 **f |** 213.612.4954

KLEINFELDER
Bright People. Right Solutions.

PLATES

REFERENCE:

GOOGLE EARTH PRO

NOT TO SCALE

The information included on this graphic representation has been compiled from a variety of sources and is subject to change without notice. Kleinfelder makes no representations or warranties, express or implied, as to accuracy, completeness, timeliness, or rights to the use of such information. This document is not intended for use as a land survey product nor is it designed or intended as a construction design document. The use or misuse of the information contained on this graphic representation is at the sole risk of the party using or misusing the information.

KLEINFELDER
Bright People. Right Solutions.
www.kleinfelder.com

PROJECT NO.	110356
DRAWN:	6/15/10
DRAWN BY:	JP
CHECKED BY:	DH
FILE NAME:	110356vic.MXD

VICINITY MAP

PERRIS WATER FILTRATION PLANT
REJECT RECOVERY FACILITY
PERRIS, CALIFORNIA

PLATE

1

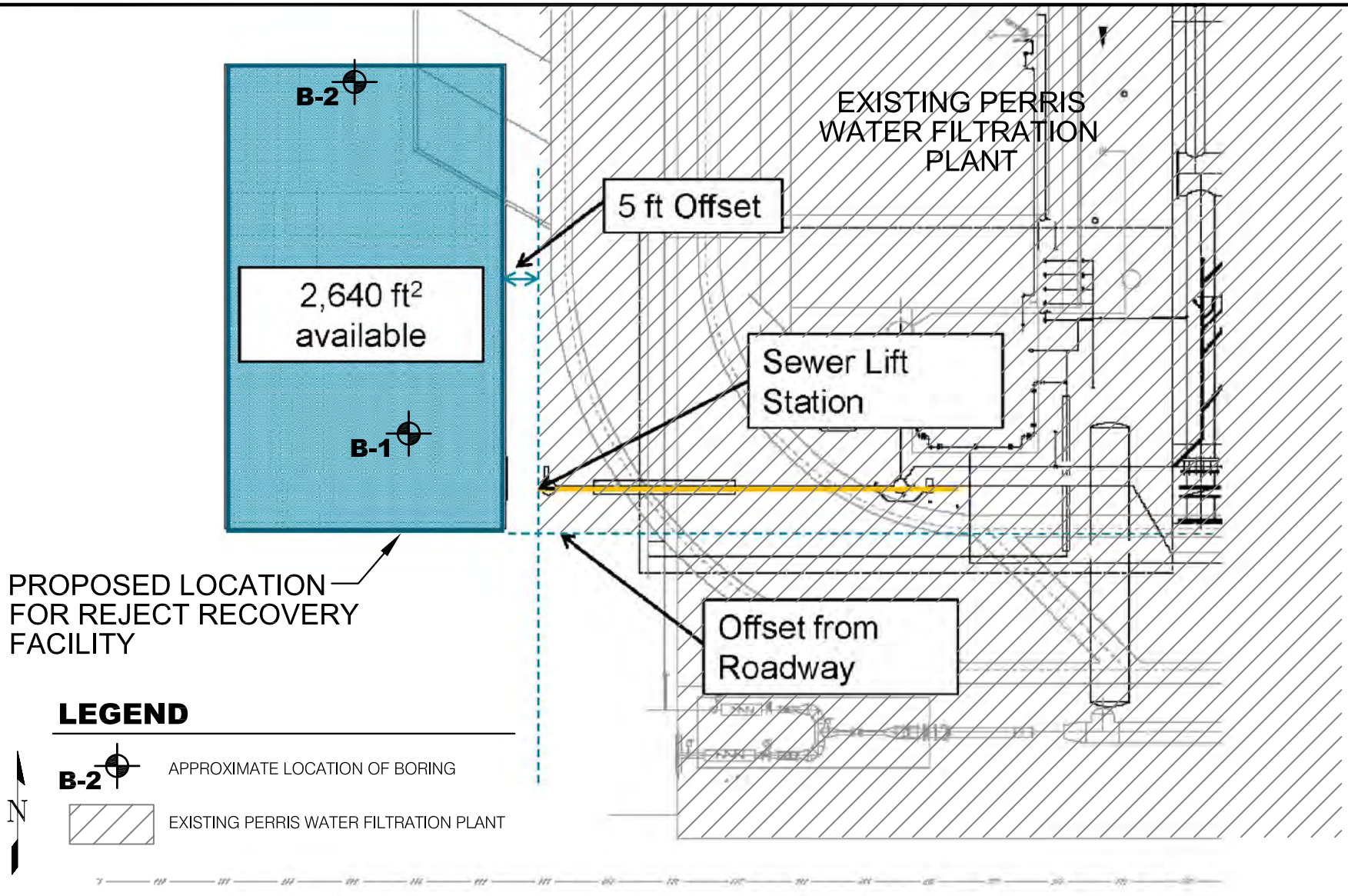

NOT TO SCALE

BASEMAP PROVIDED BY CLIENT

The information included on this graphic representation has been compiled from a variety of sources and is subject to change without notice. Kleinfelder makes no representations or warranties, express or implied, as to accuracy, completeness, timeliness, or rights to the use of such information. This document is not intended for use as a land survey product nor is it designed or intended as a construction design document. The use or misuse of the information contained on this graphic representation is at the sole risk of the party using or misusing the information.

KLEINFELDER
Bright People. Right Solutions.
www.kleinfelder.com

PROJECT NO.	110356
DRAWN:	6/11/10
DRAWN BY:	JP
CHECKED BY:	DH
FILE NAME:	110356bor.dwg

BORING LOCATION AND SITE PLAN

PERRIS WATER FILTRATION PLANT
REJECT RECOVERY FACILITY
PERRIS, CALIFORNIA

PLATE

2

EXPLORATORY BORINGS

UNIFIED SOIL CLASSIFICATION SYSTEM

MAJOR DIVISION		LTR	ID	DESCRIPTION
COARSE GRAINED SOILS	GRAVEL AND GRAVELLY SOILS	GW		Well-graded gravels, gravel-sand mixtures
		GP		Poorly-graded gravels, gravel-sand mixtures
		GM		Silty gravels, gravel-sand-silt mixtures
		GC		Clayey gravels, gravel-sand-clay mixtures
	SAND AND SANDY SOILS	SW		Well-graded sands, gravelly sands
		SP		Poorly-graded sands and gravelly sands
		SM		Silty sands, sand-silt mixture
		SC		Clayey sands, sand-clay mixture
FINE GRAINED SOILS	SILTS AND CLAYS LL < 50	ML		Inorganic silts and very fine sands, rock flour, silty or clayey fine sands
		CL		Inorganic clays of low to medium plasticity; gravelly clays silty clays,sandy clays, lean clays
		OL		Organic silts and organic silt-clays of low plasticity
	SILTS AND CLAYS LL > 50	MH		Inorganic silts, micaceous or diatomaceous fine sands or silts, elastic silts
		CH		Inorganic clays of medium to high plasticity
		OH		Organic clays of medium to high plasticity
	HIGHLY ORGANIC SOILS	Pt		Peat, muck and other highly organic soils

▼ Approximate water level observed in boring following drilling

SOIL SAMPLE

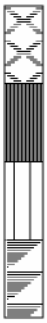

Bulk Sample

Drive Sample - California Sample

Shelby Tube Sample

Standard Penetration Test (SPT) Sample

ADDITIONAL TESTS

CN	- Consolidation
COR	- Corrosion
CP	- Collapse Potential
DS	- Direct Shear
EI	- Expansion Potential
MAX	- Maximum Dry Density
OC	- Organic Content
PI	- Plasticity Index
RV	- R-Value
SE	- Sand Equivalent
GS	- Grain Size Distribution

NOTES:

Blow counts represent the number of blows of a 140-pound hammer falling 30 inches required to drive a sampler through the last 12 inches of an 18-inch penetration, unless otherwise noted.

The lines separating strata on the logs represent approximate boundaries only. The actual transition may be gradual. No warranty is provided as to the continuity of soil strata between borings. Logs represent the soil section observed at the boring location on the date of drilling only.

KLEINFELDER
Bright People. Right Solutions.
1220 Research Drive, Suite B, Redlands, CA 92374
PH. (909) 793-2691 • FAX (909) 792-1704

LEGEND TO LOGS

PLATE
A-1

Date Drilled	5/10/10	Water Depth:	38.5 feet
Drilled By:	Cal Pac Drilling	Date Measured:	5/10/10
Drilling Method:	Mobile B-61, 6-inch HSA	Elevation:	1450 feet (approx.)
Logged By:	L.Hong	Datum:	MSL

Elevation (approx.) (feet) Depth	Sample Number	Blows per Foot	Sample Type	Graphic Log	USCS Description	GEOTECHNICAL DESCRIPTION AND CLASSIFICATION	Dry Unit Weight (pcf)	Moisture Content (%)	Additional Tests & Remarks
	1				SM	**Fill (Qaf): Silty Sand:** Olive brown, moist, fine to medium grained sand, some fine to coarse gravel to 3/4 inch in diameter, light drill chatter			Max; EI; DS
					SM	**Silty Sand with Gravel:** Olive brown, moist, fine to medium grained sand, with fine to coarse gravel to 1-1/2 inches in diameter			
1445 5	2	45			SM	**Very Old Alluvial Fan Deposits (Qvof): Silty Sand:** Olive brown, moist, fine to medium grained sand, trace fine gravel to 1/2 inch in diameter, sand is subangular	129.7	9.8	
						--yellowish brown, dense, weakly cemented, decrease in medium grained sand content, trace clay, sand is subrounded			
1440 10	3	48			SC	**Clayey Sand:** Yellowish brown to olive brown, moist, dense, fine to medium grained sand, some coarse grained sand, sand is subrounded	131.4	8.5	
1435 15	4	64				--olive yellow to light olive brown, very dense, weakly cemented, increase in fine grained sand content, decrease in clay content, with calcium carbonate, sand is subangular			

GEOTECH TEMECULA 110356 PWTP.GPJ KA_RDLND.GDT 5/28/10

KLEINFELDER
Bright People. Right Solutions.

PROJECT NO. 110356

Perris Water Filtration Plant
Reject Recovery Facility
Perris, California

LOG OF BORING B-1

PLATE
A-2a

Legend to Logs on Plate A-1

Note: The boundaries between soil and/or rock types shown on the logs are approximate as the transition between different soil layers may be gradual.

Elevation (approx.) (feet) Depth	Sample Number	Blows per Foot	Sample Type	Graphic Log	USCS Description	GEOTECHNICAL DESCRIPTION AND CLASSIFICATION *(Continued From Previous Page)*	Dry Unit Weight (pcf)	Moisture Content (%)	Additional Tests & Remarks
	5	40			SM	**Silty Sand:** Olive brown, dense, moist, fine to medium grained sand, trace coarse grained sand, trace clay, sand is subrounded			
1425 25	6	25			SP-SM	**Poorly Graded Sand with Silt:** Olive brown, moist, medium dense, fine to coarse grained sand, trace fine gravel to 1/4 inch in diameter, micaceous, sand is subangular --increase in sand grain size in cuttings			
1420 30	7	25			SC-SM	**Clayey Sand to Silty Sand:** Olive brown, moist, medium dense, fine to medium grained sand, trace coarse grained sand, sand is subrounded --with clay in cuttings			GS; PI
1415 35	8	30			SC	**Clayey Sand:** yellowish to olive brown, moist, medium dense to dense, fine to medium grained sand, trace coarse grained sand, with silt, sand is subrounded ▼ --ground water was encountered at approximately 38-1/2 feet			GS; PI
1410 40	9	39				--olive brown, moist to wet, dense, fine to coarse grained sand			

GEOTECH TEMECULA 110356 PWTP.GPJ KA_RDLND.GDT 5/28/10

KLEINFELDER
Bright People. Right Solutions.

PROJECT NO. 110356

Perris Water Filtration Plant
Reject Recovery Facility
Perris, California

LOG OF BORING B-1

PLATE
A-2b

Legend to Logs on Plate A-1

Note: The boundaries between soil and/or rock types shown on the logs are approximate as the transition between different soil layers may be gradual.

Elevation (approx.) (feet) Depth	Sample Number	Blows per Foot	Sample Type	Graphic Log	USCS Description	GEOTECHNICAL DESCRIPTION AND CLASSIFICATION *(Continued From Previous Page)*	Dry Unit Weight (pcf)	Moisture Content (%)	Additional Tests & Remarks
1405 45	10	44			SP	**Poorly Graded Sand:** Yellowish brown, wet, dense, medium grained sand, some silt, no sample recovery at 45 feet, sampler was lost inside the hole, only the waste barrel from the sampler was recovered			
1400 50	11	31				--no sample recovery, only slough in sampler, wet			
						Borehole was terminated at approximately 51-1/2 feet Ground water was encountered at approximately 38-1/2 feet Borehole was backfilled with soil cuttings			

KLEINFELDER
Bright People. Right Solutions.

PROJECT NO. 110356

Perris Water Filtration Plant
Reject Recovery Facility
Perris, California

LOG OF BORING B-1

PLATE
A-2c

Legend to Logs on Plate A-1

Note: The boundaries between soil and/or rock types shown on the logs are approximate as the transition between different soil layers may be gradual.

GEOTECH TEMECULA 110356 PWTP.GPJ KA_RDLND.GDT 5/28/10

Date Drilled	5/10/10	Water Depth:	33.5 feet
Drilled By:	Cal Pac Drilling	Date Measured:	5/10/10
Drilling Method:	Mobile B-61, 6-inch HSA	Elevation:	1447 feet (approx.)
Logged By:	L.Hong	Datum:	MSL

Elevation (approx.) (feet) Depth	Sample Number	Blows per Foot	Sample Type	Graphic Log	USCS Description	GEOTECHNICAL DESCRIPTION AND CLASSIFICATION	Dry Unit Weight (pcf)	Moisture Content (%)	Additional Tests & Remarks
					SM	**Fill (Qaf): Silty Sand:** Olive brown, moist, fine to medium grained sand, with fine to coarse gravel to 1 inch in diameter			
	1				SM	**Very Old Alluvial Fan Deposits (Qvof): Silty Sand:** Olive brown, moist, fine to medium grained sand, trace fine to coarse gravel to 3/4 inch in diameter, sand is subangular			COR
1445									
5	2	49				--yellowish brown, dense, fine grained sand, trace clay, trace calcium carbonate, sand is subrounded			
					SC	**Clayey Sand:** Yellowish brown, moist, dense, fine to medium grained sand	126.3	11.7	CP
1440									
10	3	69				--olive brown, very dense, weakly cemented, increase in silt content, with black color staining, trace clay	130.1	9.8	
1435									
15	4	82			SP-SM	**Poorly Graded Sand with Silt:** Olive, moist, very dense, weakly to moderately cemented, fine to coarse grained sand, trace clay, trace calcium carbonate, sand is subangular	129.0	7.6	
1430									

KLEINFELDER
Bright People. Right Solutions.

PROJECT NO. 110356

Perris Water Filtration Plant
Reject Recovery Facility
Perris, California

LOG OF BORING B-2

PLATE
A-3a

GEOTECH TEMECULA 110356 PWTP.GPJ KA_RDLND.GDT 5/28/10

Legend to Logs on Plate A-1

Note: The boundaries between soil and/or rock types shown on the logs are approximate as the transition between different soil layers may be gradual.

Elevation (approx.) (feet) Depth	Sample Number	Blows per Foot	Sample Type	Graphic Log	USCS Description	GEOTECHNICAL DESCRIPTION AND CLASSIFICATION *(Continued From Previous Page)*	Dry Unit Weight (pcf)	Moisture Content (%)	Additional Tests & Remarks
					SM	**Silty Sand:** Olive brown, moist, dense, fine grained sand, some medium grained sand, sand is subrounded	130.3	10.1	
1425					SM-SC	**Silty Sand to Clayey Sand:** Olive brown, moist, fine to medium grained sand, visual classification based on cuttings			
25									
1420									
30									
1415						--ground water was encountered at approximately 33-1/2 feet --soil is wet in the cuttings			
35									
1410									
40									
1405									

GEOTECH TEMECULA 110356 PWTP.GPJ KA_RDLND.GDT 5/28/10

KLEINFELDER
Bright People. Right Solutions.

PROJECT NO. 110356

Perris Water Filtration Plant
Reject Recovery Facility
Perris, California

LOG OF BORING B-2

PLATE
A-3b

Legend to Logs on Plate A-1

Note: The boundaries between soil and/or rock types shown on the logs are approximate as the transition between different soil layers may be gradual.

Elevation (approx.) (feet) Depth	Sample Number	Blows per Foot	Sample Type	Graphic Log	USCS Description	GEOTECHNICAL DESCRIPTION AND CLASSIFICATION *(Continued From Previous Page)*	Dry Unit Weight (pcf)	Moisture Content (%)	Additional Tests & Remarks
45	6	41			SP-SM	**Poorly Graded Sand with Silt:** Dark olive to yellowish brown, moist to wet, dense, medium to coarse grained sand, some fine grained sand, sand is subangular			
1400									
50	7	82				--very dense, trace clay, increase in coarse grained sand content			
						Borehole was terminated at approximately 51-1/2 feet Ground water was encountered at approximately 33-1/2 feet Borehole was backfilled with soil cuttings			

GEOTECH TEMECULA 110356 PWTP.GPJ KA_RDLND.GDT 5/28/10

KLEINFELDER
Bright People. Right Solutions.

PROJECT NO. 110356

Perris Water Filtration Plant
Reject Recovery Facility
Perris, California

LOG OF BORING B-2

PLATE
A-3c

Legend to Logs on Plate A-1

Note: The boundaries between soil and/or rock types shown on the logs are approximate as the transition between different soil layers may be gradual.

LABORATORY TESTING

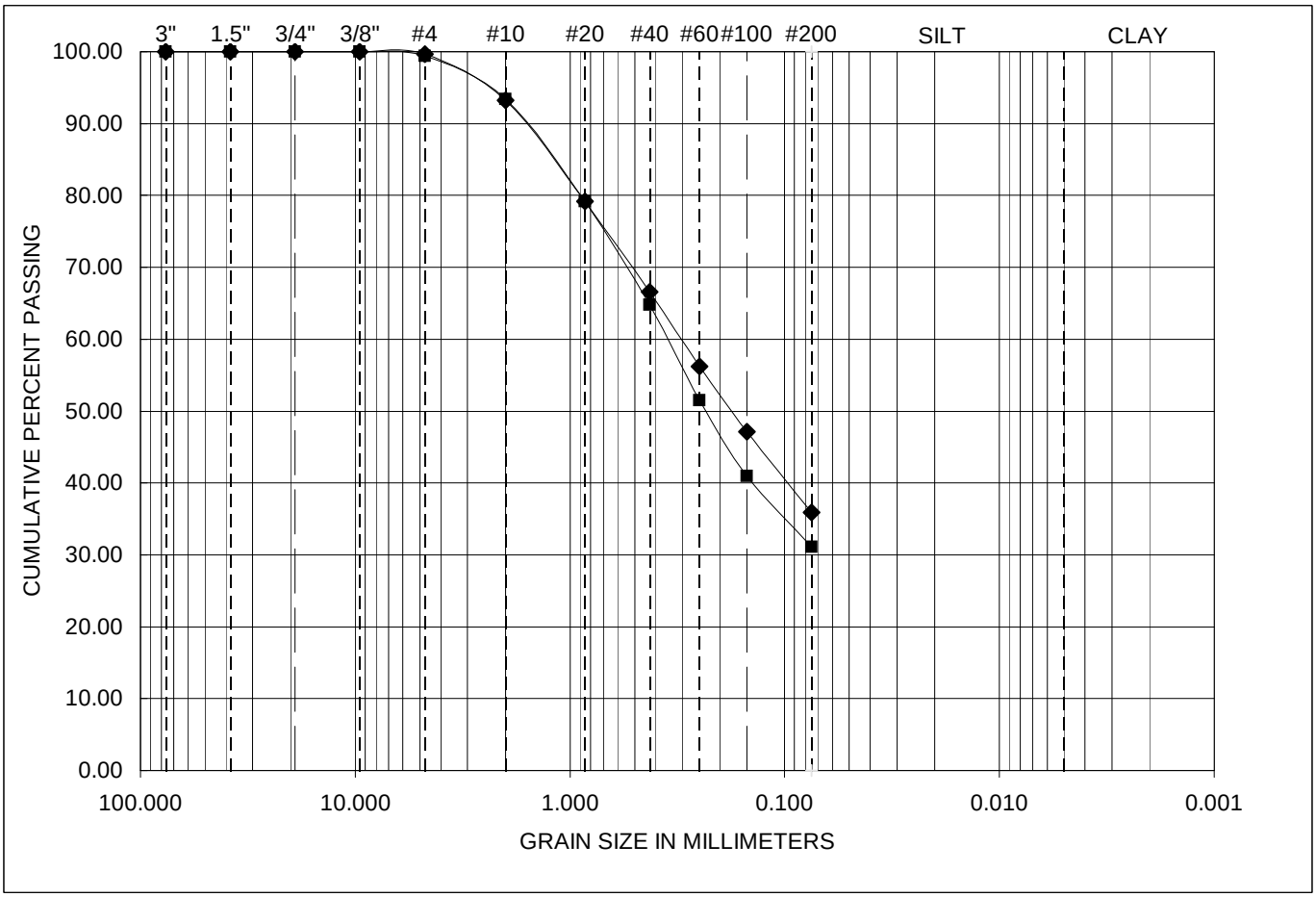

COBBLE	GRAVEL	SAND	SILT	CLAY

SYMBOL	SAMPLE IDENTIFICATION			PERCENTAGES			ATTERBERG LIMITS			SOIL CLASSIFICATION	USCS TOTAL SAMPLE
	BORING NO.	SAMPLE NO.	DEPTH (ft.)	GRAVEL	SAND	FINES	LL	PL	PI		
♦	B-1	7	30.0	0	64	35.9	21	15	6	Clayey Sand to Silty Sand	SC-SM
■	B-1	8	35.0	1	68	31.1	25	15	10	Clayey Sand	SC

KLEINFELDER
Bright People. Right Solutions.

PROJECT NO 110356

Perris Water Filtration Plant
Reject Recovery Facility

Perris, California

GRAIN SIZE DISTRIBUTION

PLATE

B-1

PLASTICITY CHART

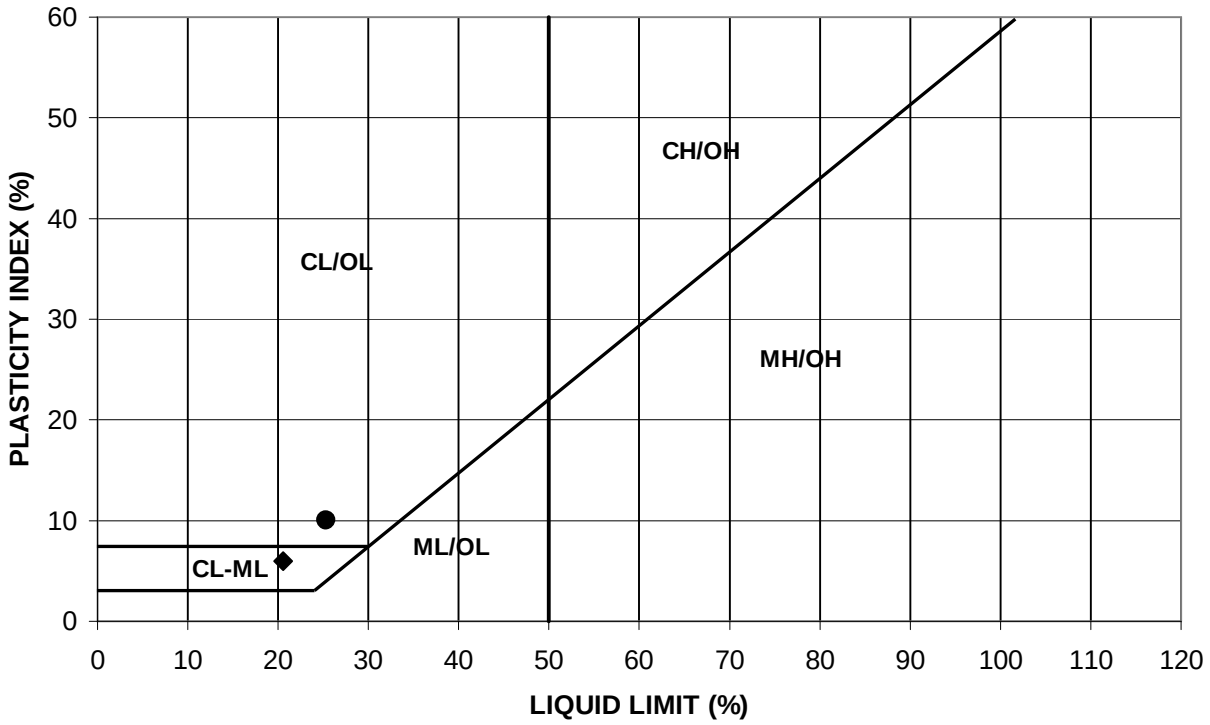

SYMBOL	SAMPLE IDENTIFICATION			ATTERBERG LIMITS			SOIL CLASSIFICATION	USCS TOTAL SAMPLE
	BORING NO.	SAMPLE NO.	DEPTH (ft)	LL	PL	PI		
♦	B-1	7	30	21	15	6	Clayey Sand to Silty Sand	SC-SM
●	B-1	8	35	25	15	10	Clayey Sand	SC

KLEINFELDER
Bright People. Right Solutions.

PROJECT NO. 110356

Perris Water Filtration Plant
Reject Recovery Facility

Perris, California

PLASTICITY INDEX TEST

PLATE

B-2

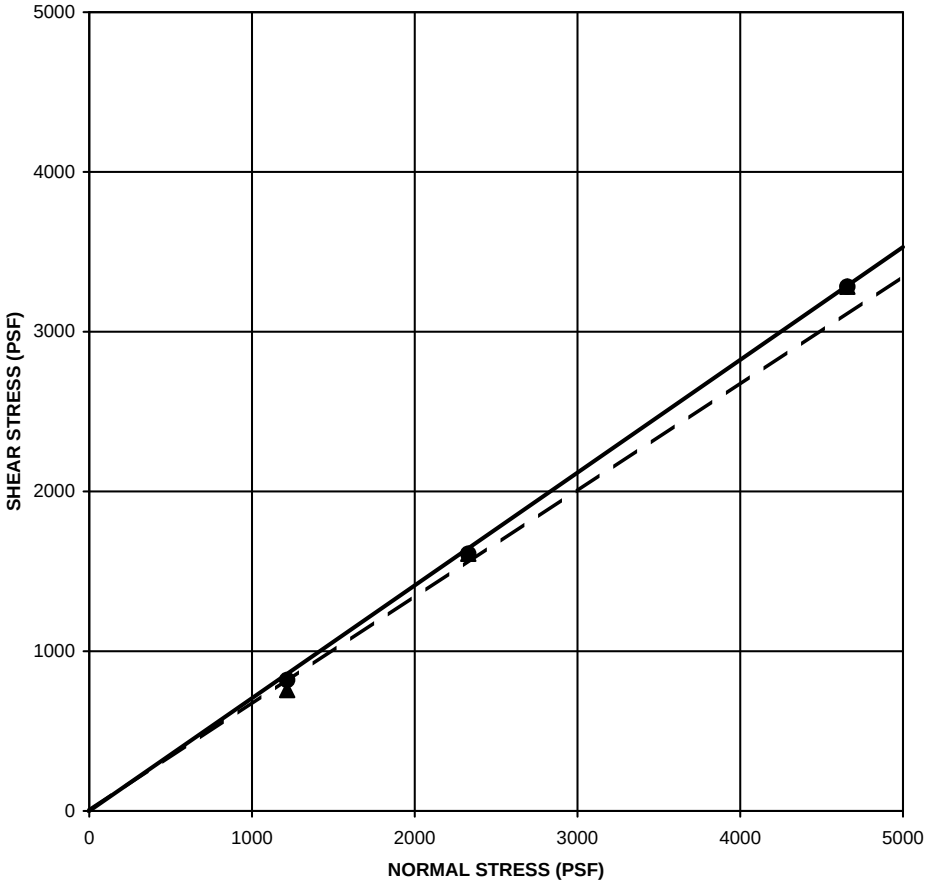

SYMBOL		BORING NO.	SAMPLE NO.	DEPTH (ft)	COHESION (psf)	FRICTION ANGLE (deg)	SOIL CLASSIFICATION	USCS TOTAL SAMPLE
PEAK*	●	B-1	1	0-5	0	35	Clayey Sand	SM
ULTIMATE*	▲	B-1	1	0-5	0	34	Clayey Sand	SM

INITIAL MOISTURE(%):	6.9
INITIAL DRY DENSTIY(PCF):	125.3
FINAL MOISTURE(%):	12.5

Normal Stress (psf)	1216	2329	4658
Peak Stress (psf)	820	1610	3282
Ultimate Stress (psf)	757	1610	3282

* Sample was remolded to 90% of the maximum dry density (ASTM D1557) at approximately the optimum moisture content

KLEINFELDER
Bright People. Right Solutions.

PROJECT NO. 110356

Perris Water Filtration Plant
Reject Recovery Facility

Perris, California

DIRECT SHEAR TEST

PLATE

B-3

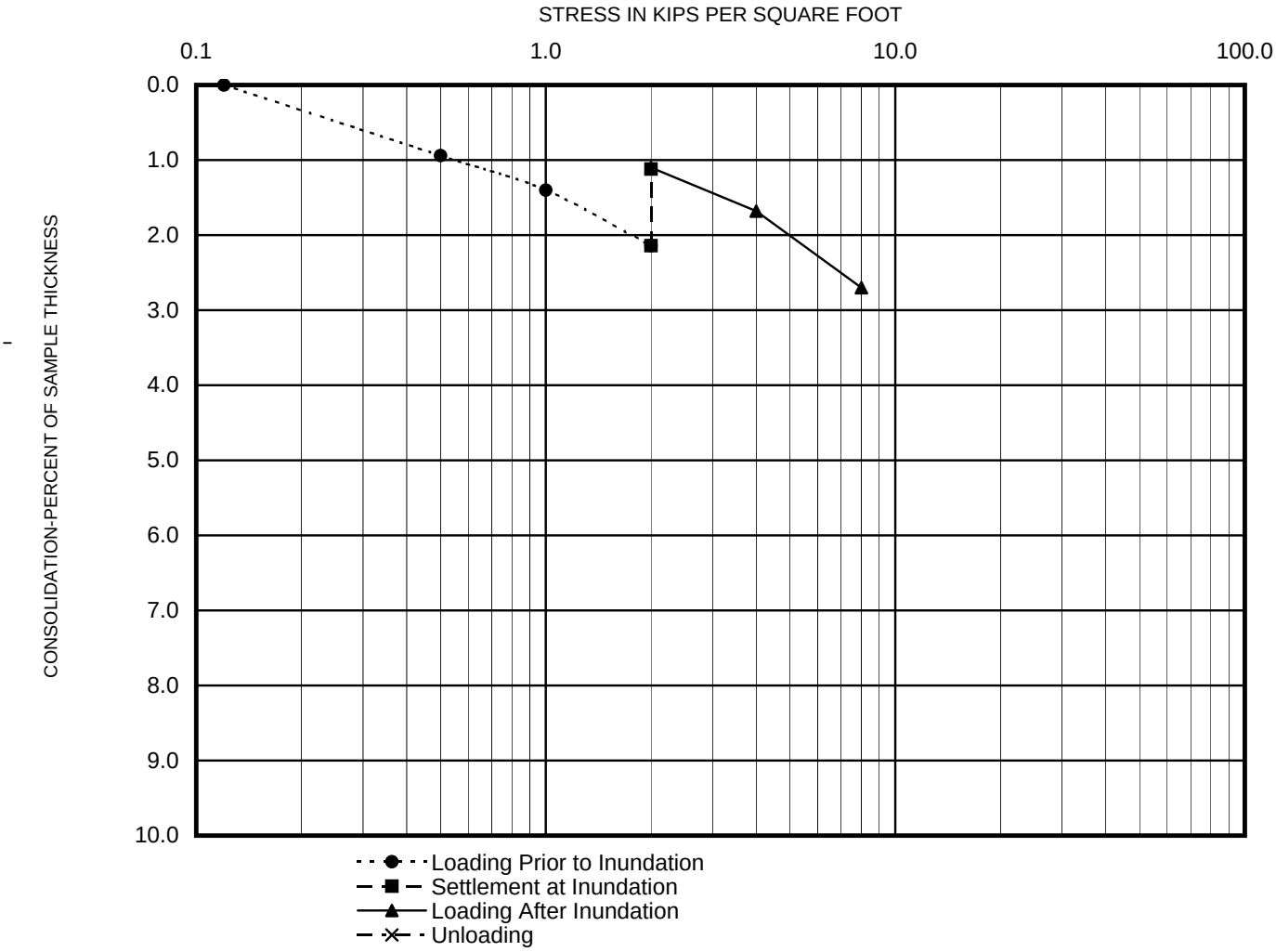

SAMPLE IDENTIFICATION			COLLAPSE POTENTIAL (%)	SOIL CLASSIFICATION	USCS TOTAL SAMPLE
BORING NO.	SAMPLE NO.	DEPTH (ft)			
B-2	2	6	0.0	Clayey Sand	SC

INITIAL MOISTURE (%): 11.7
INITIAL DRY DENSITY (PCF): 98.4
FINAL MOISTURE(%): 14.9

Testing performed in general accordance with ASTM D5333-03

KLEINFELDER
Bright People. Right Solutions.

PROJECT NO. 110356

Perris Water Filtration Plant
Reject Recovery Facility
Perris, California

COLLAPSE POTENTIAL TEST

PLATE

B-4

KLEINFELDER
Bright People. Right Solutions.

CORROSION REPORT

SCHIFF ASSOCIATES
FIFTY YEARS OF PROFESSIONALISM

www.schiffassociates.com
Consulting Corrosion Engineers – Since 1959

June 10, 2010 via email: Ephilips@kleinfelder.com

KLEINFELDER
5015 Shoreham Place
San Diego, CA 92122

Attention: Mr. Eric Philips

Re: Soil Corrosivity Study
Perris Filtration Plant, Reject
Recovery Facility
Perris, California
SA #10-0541SCS, K #110356

INTRODUCTION

Laboratory tests have been completed on two soil samples provided for the referenced project. The purpose of these tests was to determine if the soils might have deleterious effects on underground utility piping and concrete structures. Schiff Associates assumes that the samples provided are representative of the most corrosive soils at the site.

The proposed construction consists of a water filtration plant. The site is located at 19750 Old Evans Road in Perris, California. The water table was reportedly encountered at 38.5 and 33.5 feet deep during boring explorations and has historic high of 30 feet.

The scope of this study is limited to a determination of soil corrosivity and general corrosion control recommendations for materials likely to be used for construction. Our recommendations do not constitute, and are not meant as a substitute for, design documents for the purpose of construction. If the architects and/or engineers desire more specific information, designs, specifications, or review of design, Schiff Associates will be happy to work with them as a separate phase of this project.

LABORATORY SOIL CORROSIVITY TESTS

The electrical resistivity of each sample was measured in a soil box per ASTM G187 in its as-received condition and again after saturation with distilled water. Resistivities are at about their lowest value when the soil is saturated. The pH of the saturated samples was measured per CTM 643. A 5:1 water:soil extract from each sample was chemically analyzed for the major soluble salts commonly found in soil per ASTM D4327 and D513. Test results are shown in Table 1.

SOIL CORROSIVITY

A major factor in determining soil corrosivity is electrical resistivity. The electrical resistivity of a soil is a measure of its resistance to the flow of electrical current. Corrosion of buried metal is an electrochemical process in which the amount of metal loss due to corrosion is directly proportional to the flow of electrical current (DC) from the metal into the soil. Corrosion currents, following Ohm's Law, are inversely proportional to soil resistivity. Lower electrical resistivities result from higher moisture and soluble salt contents and indicate corrosive soil.

A correlation between electrical resistivity and corrosivity toward ferrous metals is:[1]

Soil Resistivity in ohm-centimeters	Corrosivity Category
Greater than 10,000	Mildly Corrosive
2,000 to 10,000	Moderately Corrosive
1,000 to 2,000	Corrosive
0 to 1,000	Severely Corrosive

Other soil characteristics that may influence corrosivity towards metals are pH, soluble salt content, soil types, aeration, anaerobic conditions, and site drainage.

Electrical resistivities were in the mildly corrosive category with as-received moisture. When saturated, the resistivities were in the moderately corrosive to corrosive categories. The resistivities dropped considerably with added moisture because the samples were dry as-received.

Soil pH value was 7.7. This value is mildly alkaline[2] and does not particularly increase soil corrosivity.

The soluble salt content of the samples was low.

The nitrate concentration was high enough to be deleterious to copper.

Tests were not made for sulfide and negative oxidation-reduction (redox) potential because these samples did not exhibit characteristics typically associated with anaerobic conditions.

This soil is classified as corrosive to ferrous metals.

---

[1] *Romanoff, Melvin. Underground Corrosion, NBS Circular 579. Reprinted by NACE. Houston, TX, 1989, pp. 166–167.*

[2] *Romanoff, Melvin. Underground Corrosion, NBS Circular 579. Reprinted by NACE. Houston, TX, 1989, p. 8.*

CORROSION CONTROL RECOMMENDATIONS

The life of buried materials depends on thickness, strength, loads, construction details, soil moisture, etc., in addition to soil corrosivity, and is, therefore, difficult to predict. Of more practical value are corrosion control methods that will increase the life of materials that would be subject to significant corrosion.

The following recommendations are based on the soil conditions discussed in the Soil Corrosivity section above. Unless otherwise indicated, these recommendations apply to the entire site or alignment.

Steel Pipe

Implement *all* the following measures:

1. Underground steel pipe with rubber gasketed, mechanical, grooved end, or other nonconductive type joints should be bonded for electrical continuity. Electrical continuity is necessary for corrosion monitoring and cathodic protection.
2. Install corrosion monitoring test stations to facilitate corrosion monitoring and the application of cathodic protection:
    a. At each end of the pipeline.
    b. At each end of all casings.
    c. Other locations as necessary so the interval between test stations does not exceed 1,200 feet.
3. To prevent dissimilar metal corrosion cells and to facilitate the application of cathodic protection, electrically isolate each buried steel pipeline per NACE Standard SP0286 from:
    a. Dissimilar metals.
    b. Dissimilarly coated piping (cement-mortar vs. dielectric).
    c. Above ground steel pipe.
    d. All existing piping.
4. Choose one of the following corrosion control options:

    OPTION 1

    a. Apply a suitable dielectric coating intended for underground use such as:
        i. Polyurethane per AWWA C222 *or*
        ii. Extruded polyethylene per AWWA C215 *or*
        iii. A tape coating system per AWWA C214 *or*
        iv. Hot applied coal tar enamel per AWWA C203 *or*
        v. Fusion bonded epoxy per AWWA C213.
    b. Apply cathodic protection to steel piping as per NACE Standard SP0169.

OPTION 2

a. As an alternative to dielectric coating and cathodic protection, apply a ¾-inch cement mortar coating per AWWA C205 or encase in concrete 3 inches thick, using any type of cement. Joint bonds, test stations, and insulated joints are still required for these alternatives.

NOTE: Some steel piping systems, such as for oil, gas, and high-pressure piping systems, have special corrosion and cathodic protection requirements that must be evaluated for each specific application.

Iron Pipe

Implement *all* the following measures:

1. Electrically insulate underground iron pipe from dissimilar metals and from above ground iron pipe with insulating joints per NACE Standard SP0286.
2. Bond all nonconductive type joints for electrical continuity. Electrical continuity is necessary for corrosion monitoring and cathodic protection.
3. Install corrosion monitoring test stations to facilitate corrosion monitoring and the application of cathodic protection:
    a. At each end of the pipeline.
    b. At each end of any casings.
    c. Other locations as necessary so the interval between test stations does not exceed 1,200 feet.
4. Choose one of the following corrosion control options:

    OPTION 1

    a. Apply a suitable coating intended for underground use such as:
        i. Polyethylene encasement per AWWA C105; *or*
        ii. Epoxy coating; *or*
        iii. Polyurethane; *or*
        iv. Wax tape.

        NOTE: The thin factory-applied asphaltic coating applied to ductile iron pipe for transportation and aesthetic purposes does not constitute a corrosion control coating.

    b. Apply cathodic protection to cast and ductile iron piping as per NACE Standard SP0169.

    OPTION 2

    a. As an alternative to dielectric coating and cathodic protection, concrete encase all buried portions of metallic piping so that there is a minimum of 3 inches of concrete cover provided over and around surfaces of pipe, fittings, and valves using any type of cement.

Copper Tubing

Protect buried copper tubing by *one* of the following measures:

1. Prevention of soil contact. Soil contact may be prevented by placing the tubing above ground or encasing the tubing using PVC pipe with solvent-welded joints.
2. Installation of a factory-coated copper pipe with a minimum 25-mil thickness such as Kamco's Aqua Shield™, Mueller's Streamline Protec™, or equal. The coating must be continuous with no cuts or defects.
3. Installation of 12-mil polyethylene pipe wrapping tape with butyl rubber mastic over a suitable primer. Protect wrapped copper tubing by applying cathodic protection per NACE Standard SP0169.

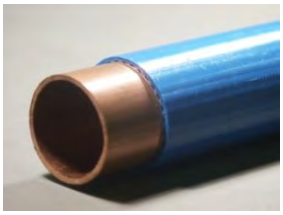

Plastic and Vitrified Clay Pipe

1. No special precautions are required for plastic and vitrified clay piping placed underground from a corrosion viewpoint.

2. Protect all metallic fittings and valves with wax tape per AWWA C217 or epoxy.

All Pipe

1. On all pipes, appurtenances, and fittings not protected by cathodic protection, coat bare metal such as valves, bolts, flange joints, joint harnesses, and flexible couplings with wax tape per AWWA C217 after assembly.

2. Where metallic pipelines penetrate concrete structures such as building floors, vault walls, and thrust blocks use plastic sleeves, rubber seals, or other dielectric material to prevent pipe contact with the concrete and reinforcing steel.

Concrete

1. From a corrosion standpoint, any type of cement may be used for concrete structures and pipe because the sulfate concentration is negligible, 0 to 0.1 percent.[3,4,5,6]
2. Standard concrete cover over reinforcing steel may be used for concrete structures and pipe in contact with these soils due to the low chloride concentration[7] found onsite.

---

[3] *1997 Uniform Building Code (UBC) Table 19-A-4*

[4] *2006 International Building Code (IBC) which refers to American Concrete Institute (ACI-318) Table 4.3.1*

[5] *2006 International Residential Code (IRC) which refers to American Concrete Institute (ACI-318) Table 4.3.1*

[6] *2007 California Building Code (CBC) which refers to American Concrete Institute (ACI-318) Table 4.3.1*

[7] *Design Manual 303: Concrete Cylinder Pipe. Ameron. p.65*

CLOSURE

Our services have been performed with the usual thoroughness and competence of the engineering profession. No other warranty or representation, either expressed or implied, is included or intended.

Please call if you have any questions.

Respectfully Submitted,
SCHIFF ASSOCIATES

Leobardo Solis

Ronald Z. Hodgman, P.E.

Enc: Table 1

10-0541SCS RPT LS

Table 1 - Laboratory Tests on Soil Samples

Kleinfelder
Perris Water Filtration Plant
Your #110356, SA #10-0541SCS
3-Jun-10

Sample ID			B-1 @ 0-5' SM	B-2 @ 6' SC
Resistivity		**Units**		
as-received		ohm-cm	32,400	48,000
saturated		ohm-cm	1,900	2,200
pH			7.7	7.7
Electrical Conductivity		mS/cm	0.13	0.11
Chemical Analyses				
Cations				
calcium	Ca^{2+}	mg/kg	41	28
magnesium	Mg^{2+}	mg/kg	9.4	7.3
sodium	Na^{1+}	mg/kg	69	85
potassium	K^{1+}	mg/kg	13	6.1
Anions				
carbonate	CO_3^{2-}	mg/kg	ND	ND
bicarbonate	HCO_3^{1-}	mg/kg	119	46
flouride	F^{1-}	mg/kg	2.8	6.3
chloride	Cl^{1-}	mg/kg	34	45
sulfate	SO_4^{2-}	mg/kg	56	78
phosphate	PO_4^{3-}	mg/kg	13	ND
Other Tests				
ammonium	NH_4^{1+}	mg/kg	ND	ND
nitrate	NO_3^{1-}	mg/kg	98	19
sulfide	S^{2-}	qual	na	na
Redox		mV	na	na

Electrical conductivity in millisiemens/cm and chemical analysis were made on a 1:5 soil-to-water extract.
mg/kg = milligrams per kilogram (parts per million) of dry soil.
Redox = oxidation-reduction potential in millivolts
ND = not detected
na = not analyzed

Appendix 4-A

EMWD's Approved Materials List

APPENDIX A

EMWD APPROVED MATERIALS LIST

Latest Revision:
October 1, 2009

EASTERN MUNICIPAL WATER DISTRICT
APPROVED MATERIALS LIST

C O N T E N T S

1. AIR VALVES 1
2. CAST IRON FITTINGS C-110 1
3. DUCTILE IRON FITTINGS C-153 2
4. FIRE HYDRANTS 2
5. FRAMES AND COVERS 2
6. METERS 3
7. METER BOXES 3
8. MISCELLANEOUS BRASS 4
9. PIPE 5
10. PRECAST MANHOLES - Manhole Shafts, Cones, Flat Tops & Grade Rings 24" - 48" 6
11. RESTRAINING JOINT DEVICES 7
12. VALVES 7
13. ZINC CAPS 11
14. WIRING 11
15. VFD's 11

APPENDIX “A”

EASTERN MUNICIPAL WATER DISTRICT
APPROVED MATERIALS LIST

If Contractor uses materials listed on this approved material list, no formal submittal will be required, except for pipe submittals. Contractor, however, must submit and identify that materials to be used on the project comply with the approved list.

1. AIR VALVES

Air Release and Vacuum Valve - EMWD Standard Drawing B-598 and B-367, Sizes 1" & 2"
- APCO VALVE COMPANY - Model 143C and 145C
- CRISPIN VALVE COMPANY - Model UL-10 and UL-20
- EMPIRE VALVE COMPANY - Model 940
- VALVMATIC VALVE COMPANY - Model 201-C and 202C
- CLA-VAL COMPANY - Model #361-CAV564B and #362-CAV332

Air Release and Vacuum Valve - EMWD Standard Drawing B-578, Sizes 4" & 6"
- APCO VALVE COMPANY - Model APCO 149-C & APCO 150-C
- CRISPIN VALVE COMPANY - Model UL-41 (4") and Model AL-61/PL-10 (6")
- CLA-VAL COMPANY - Model #364-CAV332 and #366-CAV732-3

Pump Air Valve
- ARMSTRONG MACHINE WORKS - Model 21

2. CAST IRON FITTINGS C-110

Cast Iron Flanged Fittings, Various Sizes -
- Shall conform to the latest revision of ASA Specification A21.10 (AWWA C110) Flanged Fittings. These fittings shall be cement lined in accordance with the latest revision of ASA Specification No. A21.4 and shall have standard machine finish.

Cast Iron Hub Fittings -
- Shall conform to the latest revision of AWWA C100.52 ASA 21-10250 PSI for Class 150 and 200 pipe, cement line in accordance with the latest revision of ASA Specification A21.4.
- Size, Joint size, and Pressure Rating shall be as specified on Purchase Orders, Construction plans, and Bid Sheets.

Cast Iron Fittings -
- Shall conform to latest revision of ASA Spec. A21.10 (AWWA C110) Flanged Fittings.

Fittings shall be cement lined, ASA Spec. A21.4, and shall have standard machine finish.
- SIGMA CORPORATION - Model Sigma/Nappco
- STAR PIPE PRODUCTS - Model Star Fittings
- TYLER PIPE - Model Tyler Fittings
- UNION FOUNDRY* - Model Union Fittings *(Domestic Fittings)
- SMITH COPPER - Model Flanged Fittings for 125# and 250#

APPENDIX "A"

3. DUCTILE IRON FITTINGS C-153

Fittings shall be Ductile Iron and conform to ANSI/AWWA C153/A21.53, ANSI/AWWA C111/A21.11 and ANSI/AWWA C110/A21.10.

Fittings shall be Mechanical Joints or Push-on Joints, Tar coated (Seal), and Cement-mortar lined per ANSI A21.4 (AWWA/C104).

- PACIFIC STATES
- SIP INDUSTRIES
- SIGMA CORPORATION
- STAR PIPE PRODUCTS
- TYLER PIPE COMPANY
- UNION FOUNDRY
- U.S. PIPE
- ONE BOLT INC. (ASTM/A536 Restraint Joint Fittings)
- PIPELINE COMPONENTS, INC. (M.J. Compact Fittings – All Sizes; M.J. Full Body Fittings – All Sizes and Push On Fittings – 4" – 8")

4. FIRE HYDRANTS

Super Hydrant (6" x 1-4 x 2-2 ½"), EMWD Standard Drawings B-516 & B-517.

- AVK – Series 24 – Model 90 (24-90)
- CLOW - Model: El Rancho 2060 Bronze and Model: 860
- JONES - Model: J-3765 Bronze
- LONG BEACH IRON - Model: LBIW 615
- LONG BEACH IRON - Model: Series 130 Bronze (New Pattern)

Standard Hydrant (6" x 1-4 x 1-2 ½"), EMWD Standard Drawings B-362 & B-356

- AVK - Series 24 – Model 70 (24-70)
- CLOW - Model: El Rancho 2050 Bronze and Model: Ranger 850, F850, F860 Cast Iron
- JONES - Model: J-3700 Bronze, Model: J4040, J4060 Cast Iron
- LONG BEACH IRON - Model: Series 125 Bronze - New Pattern and Model: 611 East Bay

Intermediate Hydrant (6" x 2-2 ½"), EMWD Standard Drawings B-360 & B-354.

- CLOW - Model: Clow Rich Ranger 945
- JONES - Model: J-3720
- LONG BEACH IRON - Model: 601-613 Rich East Bay

5. FRAMES AND COVERS

Manhole Covers & Frames - 24" & 36" - Standard Drawing SB-61

- ALHAMBRA FOUNDRY - Model: A-1251 & A-1254
- EVERETT ENTERPRISES - Model: GTS - Pont-A-Mousson
- FAMEX - B&W Precast Construction - Model: F-1251 & F-1254
- NEENAH FOUNDRY - Model: R-1593
- RIVERSIDE FOUNDRY - Model #1254 and #1251
- SOUTHBAY FOUNDRY - Model: SBF-1251 & SBF-1254. Model SBF-1348 with Pick Hole for EMWD Std. Dwg. SB #30.
- NORFOLK CASTING CORP. – Model #NC-254
- STAR PIPE PRODUCTS – Model #1254

Manhole Covers & Frames - Locking
- ALHAMBRA FOUNDRY - Model: A-1175
- FAMEX FOUNDRY - Model: F-1251
- NEENAH FOUNDRY - Model: R-1251
- SOUTHBAY FOUNDRY - Model: SBF-1251
- LONG BEACH IRON WORKS - Model RE85R3PD GTS
- Manhole Shafts, Cones, Flat Tops & Grade Rings - 24" - 48"
- AMERICAN PIPE
- ASSOCIATED CONCRETE
- B&W PRECAST CONSTRUCTION
- INLAND CONCRETE
- HOWARD ENTERPRISES
- MAR-CON PRODUCTS
- SAN DIEGO PRECAST
- SOUTHWEST CONCRETE

6. METERS

a. Propeller
   - McCROMETER - Model: MG-900 Series, MW-900 Series and MW-500 Series.

b. Magnetic (Sewer)

c. Small Domestic
   - PRECISION METER COMPANY - Bronze Multi-Jett (Domestic Use)

d. Compound Meters (cubic feet registers) (strainer required)
   Sensus Tech, Inc.
   - Omni C-2 3" – 8" Model Series SRH (Absolute Encoded Register and Pulse Output)

e. Turbine Meters (cubic feet registers) (strainer required)
   Sensus Tech, Inc.
   - Omni T-2 2" – 10" Model Series "W" (Absolute Encoded Register and Pulse Output)
   (Landscape Use Only)

7. METER BOXES

a. Concrete or Polymer Concrete EMWD Standard Drawing B-590, B-591, B-342, B-344
   - ARMORCAST PRODUCTS - 12" x 20", A6000485SA (No. 37) 5/8" Polymer Concrete
     13" x 24", A6001946PC-12 (No. 38) 1" Polymer Concrete
   - BROOKS PRODUCTS - 17" x 30", Model No. 66 and 30" x 48", Model No. 68
   - EISEL ENTERPRISES (H&C) - 17" x 30", Model # 666B and 30" x 48", Model # 68MB
   - J&R CONCRETE - 12"x20", Model No. 4½ (No. 37) Polymer Concrete
     13"x24", Model W5 ¼ "P" (No. 38) Polymer Concrete
     17" x 30", Model No. 6B
     30" x 48", Model No. 8
   - ASSOCIATED CONCRETE PRODUCTS –
     12" x 20", Cat #WPB111812C21 (#437) Polymer Concrete and Cat #WPC1118RLC11
     13" x 24", Cat #WPB132412A21 (#438) Polymer Concrete and Cat #WPC1324RLC11

b. Meter Boxes and Vaults - Cross Reference Chart

Valve Box Equals

BROOKS PRODUCTS	EISEL ENTERPRISES	J&R CONCRETE PRODUCTS
#1-RD	#1R-VB-CC	#1-R
#1-RT	#2VB-VC	#2-R
#3-RT	#10VB-VC	#3-R
#4-TT	#4TT VB-VC	#4-T
#1-SP	#1RVB-CC	#5-R

Utility Vault Equals

SIZE	BROOKS	EISEL ENTERPRISES	J&R CONCRETE PRODUCTS
4'x4'	#W-300 Series	#EM 4848	#4400-1W
4'x6'6"	#W-500 Series	#EM 4878	#4660-2W
4'6"x8'6"	#W-510 Series	#EM 60108	#4686-1W
4'x 7'9"	#W-600 Series	#EM 4896	#4700-1W
4'6"x10'6"	#W-610 Series	#EM 60132	#5106-1W
6'x8'	#W-680 Series	#EM 7296	n/a #5080W

c. Vaults
- BEST CONCRETE PRODUCTS - Model: MCT-4 and MCT-5
- ASSOCIATE CONCRETE - As approved by Engineering.
- ARMORCAST PRODUCTS - Polymer Concrete only.

d. Domestic Meter Box Lid Covers
- ARMORCAST PRODUCTS – Model # A6000484-H1
- JR CONCRETE – Model # PC 412 QRP

8. MISCELLANEOUS BRASS

a. Corp Stops
- FORD - F-1000 Series, F-600 Series, FB700 Series
- JONES - J-3401 Series, J-1500 Series, J-1505 Series, J-1929 Series, J-1930 Series,
- J-1935 Series
- McDONALD - 4701-T, 4701-22 and 4701
- MUELLER - H-15000 Series, H-15008 Series, H-15000(w/110), H-15013 (w/IPT),
- H-15023 (w/IPT) and H-15008

b. Curb Stops
- FORD - ZV-3W
- JONES - J-182
- MCDONALD – 10621S
- MUELLER - H-11026
- PUBCO - 2110

c. Elbows

d. Angle Stops
- FORD - KY43-444W, FV23-666W, FV23-777W, FV43-666W, FV43-777W
- JONES - J-4201, J-1973W, J-1975W
- - MUELLER - H-14258, H-14277, Mueller (110)
- - McDONALD - 4602-T and 4602-22

e. Brass Saddles

*Service Saddles for A.C. Pipe - 4" thru 12"
- JONES - Model: J-975, J-979

*Service Saddles for C-900 Pipe - 4" thru 12"
- JONES - Model: J-996R, J-996
- McDONALD - Model: 3805
- MUELLER – Model: H-13000
- ROMAC - Model: B-101, B-202
- FORD - Model S902 & S912 (Style B2 piece bolted design)
- CAMBRIDGE BRASS – #800 series hinged bronze saddle - ¾” - 2”

*Service Saddles for Ductile Iron Pipe - 4" thru 36"
- - FORD - Model: F-101, F-202
- - ROMAC - Model: Romac 101, Romac 202
- - SMITH-BLAIR - Model: Rockwell 311, Rockwell 313

*Tapping Saddles for A.C., C-900, and Ductile Iron Pipe. Size 4" - 24"
- - FORD - Model: Fast-Sleeve 18-8 All Stainless Steel
- - JCM IND. - Model: JCM-432 All Stainless Steel, JCM-452 All Stainless Steel 14" & above.
- - POWERSEAL PRODUCTS - Model: 3490 All Stainless Steel
- - ROMAC - Model: SST 18-8 All Stainless Steel
- - SMITH BLAIR INC. - #663 (4” – 24”) AND #665 (6” – 12”)

*NOTE: Size 10" & above require double strap.

9. PIPE

a. Cement Mortar Lined & Coated Pipe
- AMERON CONCRETE PIPE
- CONTINENTAL PIPE
- NORTHWEST PIPE & CASING
- ROSCOE-MOSS
- MID AMERICA PIPE

b. Ductile Iron Pipe - EMWD Spec. 15057 - AWWA C-600, AWWA C-151, AWWA C-150, & AWWA C-104
- PACIFIC STATES
- U.S. PIPE

c. High Density Polyethylene Pipe

J-M Manufacturing Company, Inc.
Chevron Phillips Chemical Company

d. Polyvinyl Chloride Pipe C-900/C-905

4" - 12" - C-900, EMWD Spec. 02768 & 15064
14" - 36" - C-905, EMWD Spec. 15064

- CARLON PIPE - Carlon
- CERTAIN-TEED CORP.
- JOHN-MANSVILLE COMPANY - JM
- PW PIPE
- VINYL-TECH - White Knight
- DIAMOND PLASTICS CORP. - 4" - 24"

e. PVC Pipe (Sewer) - Note: See 1.a (Fittings and pipe shall be from the same manufacturer when they make both. If only pipe is made, fittings from 1.a shall be used).
- ARMCO PIPE - Contech
- CARLON PIPE
- CERTAIN-TEED CORP.
- P.W. PIPE
- JOHNS-MANSVILLE COMPANY
- VINYL-TECH - White Knight
- DIAMOND PLASTICS CORP. - SDR 35 PVC
- SYRCO INC – SDR 35 PVC
- LAMSON VYLON - 21" thru 48"

f. PVC Sewer Fittings (4" - 8"), gravity use only
- GPK
- MULTI-FITTINGS CORP.
- JOHNS-MANSVILLE CO.

g. Reinforced Concrete Pipe (Sewer)
- AMERON
- HYDRO CONDUIT
- RIALTO PIPE

h. Vitrified Clay Pipe (Sewer) - Note: Fittings to be same as pipe.
- BUILDING PRODUCTS CO. (MCP) - JCP Compression Joints
- GLADDING McBEAN CO. - "Speed-Seal"
- MISSION CLAY PRODUCTS - "Band Seal"
- PACIFIC CLAY PRODUCTS - "Wedgelock"

10. PRECAST MANHOLES - Manhole Shafts, Cones, Flat Tops & Grade Rings 24" - 48"

- AMERICAN PIPE
- AMERICAN HIGHWAY PRODUCTS
- ASSOCIATED CONCRETE
- B&W PRECAST CONSTRUCTION
- HOWARD ENTERPRISES
- INLAND CONCRETE
- MAR-CON PRODUCTS
- SAN DIEGO PRECAST
- SOUTHWEST CONCRETE

APPENDIX "A"

11. RESTRAINING JOINT DEVICES

- EBBA IRON – 2000 PV Series - 4" - 24" (C-900 & C-905)
  1100 Series - 3" - 48"
  2100 Series - 4" - 12" (C-900)
  2800 Series – 14" – 36" (C-905)

- NAPPCO/SIGMA CORP. - Model: PV-LOK Model PVM - 2" - 12"
  PV-LOK Model PVP - 2" - 12"
  ONE LOK - 4" - 36"

- U.S. PIPE - Field Lok Gaskets - 4" - 12"

- FORD - Uni-flange Series No. 200, 900, 1300 & 1400
  Uni-flange Series 1500 restraint joint for PVC pipe - 4" - 12"
  Uni-flange Series 1390 restraint joint for PVC pipe

- ROMAC INDUSTRIES – Grip Ring – 4" – 12"
  RomaGrip PVC Restrainer 3" - 24".

- STAR - Allgrip 3600 - 4" - 12" for C900 and ductile iron pipe
  Series 1000 - 4" - 12" for C-900
  Series 1100 - 4" - 12" for C-900/C-905
  PVC Grip 3500 – 4" – 16" for C-900
  Stargrip 3000 – 4" – 36" for D.I.P.

12. VALVES

a. Gate Valves

Bronze Threaded - EMWD Standard Drawing B-590 thru B-344B
NRS - ½"

- HAMMOND VALVE COMPANY - Model: 606-125 psi
- MILWAUKEE VALVE COMPANY - Model: 105-200 psi
- STOCKHAM VALVE COMPANY - Model: B-103-200 psi

NRS - 3/4" - 1" - *To be used in customer side of meter installation only. EMWD Standard Drawing B-591

- AMERICAN VALVE COMPANY - Model: Milano, M-300
- FAIRBANKS VALVE - Model: 125-S 250
- *F&F VALVE - Model: 710-Brass
- *KITZ VALVE - Code No. 27 Fig. AKH
- MILWAUKEE VALVE - Model: 1105M & 105
- NIBCO VALVE - Model: T-113 Domestic
- *PIONEER ENTERPRISES - Model: GTI-0102 & 0103
- RED AND WHITE VALVE - Model: B-206
- STOCKHAM VALVE - Model: B-103
- WOLVERINE VALVE - Model: 50293

APPENDIX “A”

a. Gate Valves ***(continued)***

NRS 1-1/2" - 2"
- AMERICAN VALVE - Model: 3-F Bronze
- MILWAUKEE VALVE - Model: 1105M & 105
- NIBCO VALVE - Model: T-113, Domestic
- STOCKHAM VALVE - Model: B-103

Cast Iron with 2" Operating Nut - 2" Blow-offs
- IOWA VALVE - Model: List 14
- MUELLER VALVE - Model: A-2380-8 and A-2380-6
- CLOW VALVE
- RENSSELSER VALVE - Model: Ludlow, List 13A
- STOCKHAM VALVE

IBBM - Horizontal, Double-Disc IBBM with By-Pass - 24"
- AMERICAN FLOW SYSTEMS - Model: A.D. "50-Line"
- CLOW - Model: Clow F5070
- MUELLER VALVE COMPANY - Model: A-2380-6

Resilient Seat - Flanged
R.S.G.V. - AWWA C-509, AWWA C-515 and AWWA C-550.
To meet EMWD Spec. 15102, Size 4" - 36"
- AMERICAN AVK COMPANY - Model: 25 AVK
- AMERICAN FLOW CONTROL COMPANY - Model: AFC-500 for 4"-12" or Series 2500 for 4"-36"
- ACIPCO - Model: 82-200W-77785-7
- CLOW - Model: Clow RW, Class 150
- KENNEDY - Model: Kennedy RS, Class 150
- M&H - Model: M&H A-4067
- MUELLER COMPANY - Model: A-2360
- STOCKHAM COMPANY - Model: Stockham G700-0
- TYLER - DRS 250
- WATEROUS COMPANY - Model: Waterous #AFC-500
- U.S. PIPE - Model: Metroseal, RS Class 150

b. Butterfly Valves

EMWD Spec. 15103 - Class 150, AWWA C-504
- AMERICAN FLOW CONTROL - Model: A.D. 150, Size 4" - 48"
- CLOW - Model: Clow BFV, Class 150, Size 4" - 72"
- DEZURIK COMPANY - Model: Dezurik BFV, Class 150, Size 4" - 20"
- KENNEDY (Mueller Co.) - Model: Kennedy BFV, Class 150, Size 4" - 72"
- CRISPIN (Previously CMB Industries) - K-FLO Model 500 Series, 3"-20" and K-FLO 47 Series, 24” - 48"
- KUBOTA - Model: Kubota BFV, Class 150, Size 24" - 48"
- M&H COMPANY - Model: 4500, Class 150, Size 4" - 24"
  Model: 1450, Class 150B, Size 30" - 48"
- MUELLER COMPANY - Model: Mueller Lineseal III, Size 4" - 24"
  Model: Mueller Lineseal III, Size 30" - 48" (with Ductile Iron Disc)

- PRATT VALVE COMPANY -
  Model: Pratt Ground Hog BFV. Class 150 with no power operation allowed.
  Size 4" - 12"
  Model: Pratt Ground Hog with power operation allowed with knowledge of turns.
  Size 14" - 48"
  Model: Pratt Triton XR-70 with handwheel. Size 24" - 48"

Class 250
- DEZURIK - Model: Dezurik
- CRISPIN (Previously CMB Industries) - Model: K-FLO Model 500 series
- PRATT/WATTS - Model: H.P. 250

Coatings - All valves larger than 12" in diameter shall have all AWWA C-550 Ferrous parts epoxy coated thermosetting.

c. Check Valves - Bronze Threaded

Bronze Swing Check Valve - Threaded 3/4" thru 2"
- HAMMOND VALVE CO. - Model No. 946 Bronze
- MILWAUKEE VALVE CO. - Model No. 510 & 511
- STOCKHAM VALVE CO. - Model No. B-320

d. Check Valves Flanged

Check valves shall be single disc, swing type, with spring and lever when so specified on the Bidding Sheet. EMWD Spec. No. 15111
- -APCO VALVE CO.
- -CLOW CO.
- -KENNEDY VALVE CO.
- -M&H CO.
- -MUELLER CO.
- -STOCKHAM CO.

e. Ball Valves - AWWA C507
- LUNKENHEIMER COMPANY
- MARPAC, INC.
- VALVE TECHNOLOGY CO. - Models D-7410-7420 and D7421-7432 Series

Meter Ball Valves - with Handles
- A.Y. MCDONALD - Model 6101 MWH 3/4" and 1"
- THE FORD METER BOX CO., INC. - Model B13-332 W - 3/4"
  Model B13-444 - 1"
- JAMES JONES - Model J1908W - 3/4" and 1"

f. Detector Checks

Single Detector Check - Less By-Pass, EMWD Standard Drawing B-389, B-390, B-573 (4" - 10")
- AMES - Model: A113-225, A113-226
- Model: A113-227, A113-228
- Model: 1000 Epoxy Coated
- FEBCO - Model: 906-UL
- GLOBE - Model: B

- HERSEY - Model: EDC III
- KENNEDY - Model: Grinnell 1371-G
- PRATT-WATTS - Model: 07F-UL/FM approved.

Double Check Detector Assemblies - EMWD Standard Drawing B-657 (3/4" - 10")
PER LATEST EDITION OF USC – FOUNDATION FOR CROSS-CONNECTION CONTROL AND HYDRAULIC RESEARCH “LIST OF APPROVED BACKFLOW PREVENTION ASSEMBLIES.”

Reduced Pressure Detector Assemblies
- AMES - Model: 5000 RPDA
- FEBCO - Model: 826YD
- HERSEY - Model: 6CM-RPDA
- PRATT-WATTS - Model: 909DDCM2, 909DDC

g. Reduced Pressure Assemblies

(3/4" - 10") - For High Hazard Service
PER LATEST EDITION OF USC - FOUNDATION FOR CROSS-CONNECTION CONTROL AND HYDRAULIC RESEARCH "LIST OF APPROVED BACKFLOW PREVENTION ASSEMBLIES."

(2 ½" - 10") - For Automatic Fire Sprinkler Systems containing Toxic Substances
- AMES - Model: 5000 RPDA
- FEBCO - Model: 826YD
- HERSEY - Model: 6CM RPDA
- PRATT-WATTS - Model: 909 Series

h. Double Check Assemblies

(3/4" - 10") - For Non-Toxic Service
PER LATEST EDITION OF USC - FOUNDATION FOR CROSS-CONNECTION CONTROL AND HYDRAULIC RESEARCH "LIST OF APPROVED BACKFLOW PREVENTION ASSEMBLIES."

(4" - 10") - For Automatic Sprinkler Systems containing Non-Toxic Substance
- AMES - Model: 3000 DCDA, 3000 DCDC
- CLA-VAL - Model: 16
- FEBCO - Model: 806 YD
- MUELLER - Model: Hersey DDCII
- WATTS - Model: 709DDC
- WILKINS - Model: DCDA

Double Check Detector Assemblies - EMWD Standard Drawing B-657 (3/4" - 10")
PER LATEST EDITION OF USC - FOUNDATION FOR CROSS-CONNECTION CONTROL AND HYDRAULIC RESEARCH "LIST OF APPROVED BACKFLOW PREVENTION ASSEMBLIES."

i. Plug Valves

(3" - 24") - Ballcentric
- HENRY PRATT CO. - Pratt Keystone - 580 Series, #898

*Other Manufacturers as Approved by Engineering

13. ZINC CAPS

- RELIANCE ZINC CAPS
- MARS ZINC CAPS

14. WIRING

a. Telemetry Cable

ALCATEL DEDW - Telemetry wire, Double jacketed, filled polyethylene jacket for burial 5-mil copper shield, solid strand 6-pair, 19 gauge copper wire Alcatel DEDW. (Approximately 5,000 ft. Rolls)

Distributors - CLIFFORD OF VERMONT
Phone No. 1-800-451-4381

b. Telemetry Hardware

CHARLES INDUSTRIES - Pedestal Model No. CPLM8-1/GTE
ENTRELEC - Terminal Model No. M4/6.SNB 0115686.13
Terminal End Stop Model No. 114836.00
DIN Rail Model No. 101598.26
3M - Splice Kit Model No. 72-N2

Distributors - CHARLES INDUSTRIES
Phone No. (847) 806-6300

ESD ELECTRICAL
Phone No. (760) 747-2211

ROYAL WHOLESALE ELECTRIC
Phone No. (951) 683-6625

c. Locating Wire - EMWD Std. Drawing B-656#14-1 UF Black Copper- Insulated Locating Wire

d. Insulated CP Test Connections & Blow-Off Connections EMWD Std. Drawing B-582 & B-379 #4 HMW – Pe (High Molecular Wt-Polyethylene Coated) Stranded Wire Black #12 TW – Solid Wire – Green or Yellow

e. Variable Frequency Drive

15. VARIABLE FREQUENCY DRIVES (VFD’s)

Variable Frequency Drives
- ABB - Model ACS 600 Direct Torque Control up to 350 hp (Western Switch).
- ALLEN BRADLEY
- TOSHIBA

APPENDIX “A”

PAGE LEFT INTENTIONALLY BLANK

Appendix 4-B

EMWD's Sole Source List

APPENDIX "B"

Equipment and Material

Listed below are the equipment and material items to be furnished, with the name of the manufacturers. Acceptable manufacturers listed shall be used by the MFSS in the proposal. No substitution of the MFSS' listed manufacturer will be permitted without written justification and the approval of the District. Products of MFSS listed as equals to those specified must be submitted with the proposal for review and approval by the District.

Item	Manufacturer
Thermal Mass Flow Indicating Transmitter	FCI
Level Measurement – Ultrasonic	Miltronics Hydroranger
ANSI Horizontal End Suction Pump	Goulds
Chlorine Residual Analyzers	Rosemount
Slide Gates	Fontaine
Submersible Pumps	Pumpex
Blowers	Lamson
Vertical Turbine Pumps	Pumpex
Motorized Operators	AUMA
PLC	Allen Bradley
Variable Frequency Drives 100 Horsepower & Above	Toshiba
Variable Frequency Drives Below 75 Horsepower	Toshiba
Acoustical Enclosures	McGill Air Pressure

APPENDIX “B”

PAGE LEFT INTENTIONALLY BLANK

Appendix 4-C

MSDS of Hydrochloric Acid

MSDS Number: **H3886** * * * * * *Effective Date:* ***02/13/09*** * * * * * *Supercedes:* ***10/16/08***

MSDS Material Safety Data Sheet

From: Mallinckrodt Baker, Inc.
222 Red School Lane
Phillipsburg, NJ 08865

Mallinckrodt CHEMICALS J.T.Baker

24 Hour Emergency Telephone: 908-859-2151
CHEMTREC: 1-800-424-9300

National Response in Canada
CANUTEC: 613-996-6666

Outside U.S. and Canada
Chemtrec: 703-527-3887

NOTE: CHEMTREC, CANUTEC and National Response Center emergency numbers to be used only in the event of chemical emergencies involving a spill, leak, fire, exposure or accident involving chemicals.

All non-emergency questions should be directed to Customer Service (1-800-582-2537) for assistance.

HYDROCHLORIC ACID (10%-33%)

1. Product Identification

Synonyms: This MSDS applies to the concentrated standard used to make laboratory solutions and any solution that contains more than 10% but less than 33% Hydrochloric acid. For diluted product, see MSDS for Hydrochloric Acid (less than 10%).
CAS No.: 7647-01-0
Molecular Weight: 36.46
Chemical Formula: HCl in H2O
Product Codes:
J.T. Baker: 0323, 0327, 0365, 4654, 4657, 5618, 5619
Mallinckrodt: 2608, 2625, H151, H168, V035

2. Composition/Information on Ingredients

Ingredient	CAS No	Percent	Hazardous
Hydrogen Chloride	7647-01-0	10 - 33%	Yes
Water	7732-18-5	67 - 90%	No

3. Hazards Identification

Emergency Overview

POISON! DANGER! CORROSIVE. LIQUID AND MIST CAUSE SEVERE BURNS TO ALL BODY TISSUE. MAY BE FATAL IF SWALLOWED OR INHALED.

SAF-T-DATA(tm) Ratings (Provided here for your convenience)

Health Rating: 3 - Severe (Poison)
Flammability Rating: 0 - None
Reactivity Rating: 2 - Moderate
Contact Rating: 4 - Extreme (Corrosive)
Lab Protective Equip: GOGGLES & SHIELD; LAB COAT & APRON; VENT HOOD; PROPER GLOVES
Storage Color Code: White (Corrosive)

Potential Health Effects

Inhalation:
Corrosive! Inhalation of vapors can cause coughing, choking, inflammation of the nose, throat, and upper respiratory tract, and in severe cases, pulmonary edema, circulatory failure, and death.
Ingestion:
Corrosive! Swallowing hydrochloric acid can cause immediate pain and burns of the mouth, throat, esophagus and gastrointestinal tract. May cause nausea, vomiting, and diarrhea, and in severe cases, death.
Skin Contact:
Corrosive! Can cause redness, pain, and severe skin burns. Concentrated solutions cause deep ulcers and discolor skin.
Eye Contact:
Corrosive! Vapors are irritating and may cause damage to the eyes. Contact may cause severe burns and permanent eye damage.
Chronic Exposure:
Long-term exposure to concentrated vapors may cause erosion of teeth. Long term exposures seldom occur due to the corrosive properties of the acid.
Aggravation of Pre-existing Conditions:
Persons with pre-existing skin disorders or eye disease may be more susceptible to the effects of this substance.

4. First Aid Measures

Inhalation:
Remove to fresh air. If not breathing, give artificial respiration. If breathing is difficult, give oxygen. Get medical attention immediately.
Ingestion:
DO NOT INDUCE VOMITING! Give large quantities of water or milk if available. Never give anything by mouth to an unconscious person. Get medical attention immediately.
Skin Contact:
In case of contact, immediately flush skin with plenty of water for at least 15 minutes while removing contaminated clothing and shoes. Wash clothing before reuse. Thoroughly clean shoes before reuse. Get medical attention immediately.
Eye Contact:
Immediately flush eyes with plenty of water for at least 15 minutes, lifting lower and upper eyelids occasionally. Get medical attention immediately.

5. Fire Fighting Measures

Fire:
Not considered to be a fire hazard. May react with metals or heat to release flammable hydrogen gas.
Explosion:
Not considered to be an explosion hazard.
Fire Extinguishing Media:
Water or water spray. Neutralize with soda ash or slaked lime.
Special Information:
In the event of a fire, wear full protective clothing and NIOSH-approved self-contained breathing apparatus with full facepiece operated in the pressure demand or other positive pressure mode. Structural firefighter's protective clothing is ineffective for fires involving hydrochloric acid. Stay away from ends of tanks. Cool tanks with water spray until well after fire is out.

6. Accidental Release Measures

Ventilate area of leak or spill. Wear appropriate personal protective equipment as specified in Section 8. Isolate hazard area. Keep unnecessary and unprotected personnel from entering. Contain and recover liquid when possible. Neutralize with alkaline material (soda ash, lime), then absorb with an inert material (e. g., vermiculite, dry sand, earth), and place in a chemical waste container. Do not use combustible materials, such as saw dust. Do not flush to sewer! US Regulations (CERCLA) require reporting spills and releases to soil, water and air in excess of reportable quantities. The toll free number for the US Coast Guard National Response Center is (800) 424-8802.

J. T. Baker NEUTRASORB® acid neutralizers are recommended for spills of this product.

7. Handling and Storage

Store in a cool, dry, ventilated storage area with acid resistant floors and good drainage. Protect from physical damage. Keep out of direct sunlight and away from heat, water, and incompatible materials. Do not wash out container and use it for other purposes. When diluting, the acid should always be added slowly to water and in small amounts. Never use hot water and never add water to the acid. Water added to acid can cause uncontrolled boiling and splashing. When opening metal containers, use non-sparking tools because of the possibility of hydrogen gas being present. Containers of this material may be hazardous when empty since they retain product residues (vapors, liquid); observe all warnings and precautions listed for the product.

8. Exposure Controls/Personal Protection

Airborne Exposure Limits:
For Hydrochloric acid:
- OSHA Permissible Exposure Limit (PEL):
5 ppm (Ceiling)
- ACGIH Threshold Limit Value (TLV):
2 ppm (Ceiling), A4 Not classifiable as a human carcinogen

Ventilation System:
A system of local and/or general exhaust is recommended to keep employee exposures below the Airborne Exposure Limits. Local exhaust ventilation is generally preferred because it can control the emissions of the contaminant at its source, preventing dispersion of it into the general work area. Please refer to the ACGIH document, *Industrial Ventilation, A Manual of Recommended Practices*, most recent edition, for details.
Personal Respirators (NIOSH Approved):
If the exposure limit is exceeded and engineering controls are not feasible, a full facepiece respirator with an acid gas cartridge may be worn up to 50 times the exposure limit or the maximum use concentration specified by the appropriate regulatory agency or respirator supplier, whichever is lowest. For emergencies or instances where the exposure levels are not known, use a full-facepiece positive-pressure, air-supplied respirator. WARNING: Air purifying respirators do not protect workers in oxygen-deficient atmospheres.
Skin Protection:
Rubber or neoprene gloves and additional protection including impervious boots, apron, or coveralls, as needed in areas of unusual exposure to prevent skin contact.
Eye Protection:
Use chemical safety goggles and/or a full face shield where splashing is possible. Maintain eye wash fountain and quick-drench facilities in work area.

9. Physical and Chemical Properties

Appearance:
Clear, colorless liquid.
Odor:
Pungent odor.
Solubility:
Infinitely soluble.
Density:
1.05 @ 15 C (59 F)
pH:
For HCL solutions: 0.1 (1.0 N), 1.1 (0.1 N), 2.02 (0.01 N)
% Volatiles by volume @ 21C (70F):
100
Boiling Point:
101 - 103C (214 - 217F)
Melting Point:
No information found.
Vapor Density (Air=1):
No information found.
Vapor Pressure (mm Hg):
No information found.
Evaporation Rate (BuAc=1):
No information found.

10. Stability and Reactivity

Stability:
Stable under ordinary conditions of use and storage.
Hazardous Decomposition Products:
When heated to decomposition, emits toxic hydrogen chloride fumes and will react with water or steam to produce heat and toxic and corrosive fumes. Thermal oxidative decomposition produces toxic chlorine fumes and explosive hydrogen gas.
Hazardous Polymerization:
Will not occur.
Incompatibilities:
A strong mineral acid, concentrated hydrochloric acid is highly reactive with strong bases, metals, metal oxides, hydroxides, amines, carbonates and other alkaline materials. Incompatible with materials such as cyanides, sulfides, sulfites, and formaldehyde.
Conditions to Avoid:
Heat, direct sunlight.

11. Toxicological Information

Hydrochloric acid: Inhalation rat LC50: 3124 ppm/1H; Oral rabbit LD50: 900 mg/kg. Investigated as a tumorigen, mutagen, reproductive effector.

--------\Cancer Lists\----------

Ingredient	---NTP Carcinogen--- Known	Anticipated	IARC Category
Hydrogen Chloride (7647-01-0)	No	No	3
Water (7732-18-5)	No	No	None

12. Ecological Information

Environmental Fate:
When released into the soil, this material is not expected to biodegrade. When released into the soil, this material may leach into groundwater.
Environmental Toxicity:
This material is expected to be toxic to aquatic life.

13. Disposal Considerations

Whatever cannot be saved for recovery or recycling should be handled as hazardous waste and sent to a RCRA approved waste facility. Processing, use or contamination of this product may change the waste management options. State and local disposal regulations may differ from federal disposal regulations. Dispose of container and unused contents in accordance with federal, state and local requirements.

14. Transport Information

Domestic (Land, D.O.T.)

Proper Shipping Name: HYDROCHLORIC ACID
Hazard Class: 8
UN/NA: UN1789
Packing Group: II
Information reported for product/size: 200L

International (Water, I.M.O.)

Proper Shipping Name: HYDROCHLORIC ACID
Hazard Class: 8
UN/NA: UN1789
Packing Group: II
Information reported for product/size: 200L

15. Regulatory Information

```
--------\Chemical Inventory Status - Part 1\---------------------------------
Ingredient                                    TSCA  EC   Japan  Australia
----------------------------------------------  ----  ---  -----  ---------
Hydrogen Chloride (7647-01-0)                  Yes  Yes   Yes      Yes
Water (7732-18-5)                              Yes  Yes   Yes      Yes

--------\Chemical Inventory Status - Part 2\---------------------------------
                                                       --Canada--
Ingredient                                    Korea  DSL   NDSL  Phil.
----------------------------------------------  -----  ---   ----  -----
Hydrogen Chloride (7647-01-0)                  Yes   Yes   No     Yes
Water (7732-18-5)                              Yes   Yes   No     Yes

--------\Federal, State & International Regulations - Part 1\----------------
                                          -SARA 302-    ------SARA 313------
Ingredient                                RQ    TPQ     List  Chemical Catg.
----------------------------------------  ---   -----   ----  --------------
Hydrogen Chloride (7647-01-0)             5000  500*    Yes        No
Water (7732-18-5)                         No    No      No         No

--------\Federal, State & International Regulations - Part 2\----------------
                                                  -RCRA-    -TSCA-
Ingredient                                CERCLA     261.33     8(d)
----------------------------------------  ------     ------    ------
Hydrogen Chloride (7647-01-0)             5000       No         No
Water (7732-18-5)                         No         No         No


Chemical Weapons Convention:  No     TSCA 12(b):  No     CDTA:  Yes
SARA 311/312:  Acute: Yes      Chronic: Yes  Fire: No  Pressure: No
Reactivity: No          (Mixture / Liquid)
```

Australian Hazchem Code: 2R
Poison Schedule: None allocated.
WHMIS:
This MSDS has been prepared according to the hazard criteria of the Controlled Products Regulations (CPR) and the MSDS contains all of the information required by the CPR.

16. Other Information

NFPA Ratings: Health: **3** Flammability: **0** Reactivity: **0**
Label Hazard Warning:
POISON! DANGER! CORROSIVE. LIQUID AND MIST CAUSE SEVERE BURNS TO ALL BODY TISSUE. MAY BE FATAL IF SWALLOWED OR INHALED.
Label Precautions:
Do not get in eyes, on skin, or on clothing.
Avoid breathing vapor or mist.
Keep container closed.
Use with adequate ventilation.
Wash thoroughly after handling.
Label First Aid:
If swallowed, DO NOT INDUCE VOMITING. Give large quantities of water. Never give anything by mouth to an unconscious person. If inhaled, remove to fresh air. If not breathing, give artificial respiration. If breathing is difficult, give oxygen. In case of contact, immediately flush eyes or skin with plenty of water for at least 15 minutes. Remove contaminated clothing and shoes. Wash clothing before reuse. In all cases call a physician.
Product Use:
Laboratory Reagent.
Revision Information:
MSDS Section(s) changed since last revision of document include: 14.
Disclaimer:
****
Mallinckrodt Baker, Inc. provides the information contained herein in good faith but makes no representation as to its comprehensiveness or accuracy. This document is intended only as a guide to the appropriate precautionary handling of the material by a properly trained person using this product. Individuals receiving the information must exercise their independent judgment in determining its appropriateness for a particular purpose. MALLINCKRODT BAKER, INC. MAKES NO REPRESENTATIONS OR WARRANTIES, EITHER EXPRESS OR IMPLIED, INCLUDING WITHOUT LIMITATION ANY WARRANTIES OF MERCHANTABILITY, FITNESS FOR A PARTICULAR PURPOSE WITH RESPECT TO THE INFORMATION SET FORTH HEREIN OR THE PRODUCT TO WHICH THE INFORMATION REFERS. ACCORDINGLY, MALLINCKRODT BAKER, INC. WILL NOT BE RESPONSIBLE FOR DAMAGES RESULTING FROM USE OF OR RELIANCE UPON THIS INFORMATION.
****
Prepared by: Environmental Health & Safety
Phone Number: (314) 654-1600 (U.S.A.)

Appendix 4-D

EMWD's Symbol & Color Legend

Symbol & Color Legend

MOTORS

STOPPED

RUNNING

STARTING/STOPPING

NOT READY

FAULTED

VALVES

CLOSED

OPENED

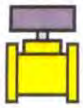
TRANSITION

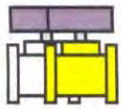
FAULTED

SYMBOLS

FLOW METER ELEMENT

PROCESS PIPING

- AMMONIA (NH3)
- BACKPULSE WATER (BPW)
- CIP FEED MEMBRANE TANKS
- CITRIC ACID (CA)
- FINISHED WATER (FW)
- PERMEATE WATER (PW)
- SERVICE WATER (W1 & W2)
- AIR
- RAW WATER (RW)
- REJECT WATER (RJT)
- SALT SOLUTION (SSOL)
- SAMPLE (SA)
- SODUM BISULFITE (SBS)
- SODIUM HYPOCHLORITE (NaOCl)
- SODUM HYDROXIDE (NaOH)
- WELL WATER (WLW)
- VACUUM/WATER (VAC)

ALARMS

UNACKD ALARM

ACKD ALARM

OPEN CHANNEL FLT

Appendix 6-A

Cost estimates classes defined by the Association for the Advancement of Cost Engineering

Classes of Cost Estimates as Defined by AACE

AACE International CLASS 5 Cost Estimate – Class 5 estimates are generally prepared based on very limited information, and subsequently have wide accuracy ranges. Typically, engineering is from 2% to 10% complete. They are often prepared for strategic planning purposes, market studies, assessment of viability, project location studies, and long range capital planning. Virtually all Class 5 estimates use stochastic estimating methods such as cost curves, capacity factors, and other parametric techniques. Expected accuracy ranges are from –20% to –50% on the low side and +30% to 100% on the high side, depending on technological complexity of the project, appropriate reference information, and the inclusion of an appropriate contingency determination. Ranges could exceed those shown in unusual circumstances.

AACE International CLASS 4 Cost Estimate – Class 4 estimates are generally prepared based on limited information and subsequently have fairly wide accuracy ranges. Typically, engineering is 10% to 40% complete. They are typically used for project screening, determination of feasibility, concept evaluation, and preliminary budget approval. Virtually all Class 4 estimates use stochastic estimating methods such as cost curves, capacity factors, and other parametric and modeling techniques. Expected accuracy ranges are from –15% to –30% on the low side and +20% to 50% on the high side, depending on the technological complexity of the project, appropriate reference information, and the inclusion of an appropriate contingency determination. Ranges could exceed those shown in unusual circumstances.

AACE International CLASS 3 Cost Estimate - Class 3 estimates are generally prepared to form the basis for budget authorization, appropriation, and/or funding. Typically engineering is from 10% to 40% complete, and would comprise a minimum of process flow diagrams, utility flow diagrams, preliminary piping and instrumentation diagrams, plot plan, developed layout drawings, and essentially complete engineered process and utility equipment lists. They are typically prepared to support full project funding requests, and become the first of the project phase "control estimates" against which all actual costs and resources will be monitored for variation to budget. Most Class 3 estimates involve more deterministic estimating methods than stochastic methods. Typical accuracy ranges for Class 3 estimates are from +/- 10% to 30% (sometimes higher), depending on the technological complexity of the project, appropriate reference information, and the inclusion of an appropriate contingency determination.

AACE International CLASS 2 Cost Estimate – Class 2 estimates are generally prepared to form a detailed control baseline against which all project work is monitored in terms of cost and progress control. For contractors, this class of estimate is often used as the “bid” estimate to establish contract value. Typically, engineering is from 30% to 70% complete, and would comprise at a minimum of the following: process flow diagrams, utility flow diagrams, preliminary piping and instrumentation diagrams, heat and material balances, final plot plan, final layout drawings, complete engineered process and utility equipment lists, single line diagrams for electrical, electrical equipment, and motor schedules, vendor quotations, detailed project execution plans, resourcing and work force plans, etc. Class 2 estimates always involve a high degree of deterministic estimating methods often involving thousands of unit cost line items. Typical accuracy ranges for Class 2 estimates are –5% to –15% on the low side, and +5 to +20% on the high side, depending on the technological complexity of the project.

AACE International CLASS 1 Cost Estimate – Class 1 estimates are generally prepared for discrete parts or sections of the total project rather than generating this level of detail for the entire project. These estimates may be prepared for to determine a fair price or bid check to evaluate claims and disputes. Typically engineering is 50% to 100% complete and would comprise of virtually all engineering and design documentation for the project and complete execution and commissioning plans. Expected accuracy ranges are –3% to –10% on the low side to +3% to + 15% on the high side depending on the technological complexity of the project, appropriate reference information and appropriate contingency determination.

APPENDIX D

GE Water and Process Technologies
Prenegotiated Proposal

[Page Left Intentionally Blank]

GE
Water & Process Technologies

Proposal for:

Eastern Municipal Water District (EMWD) PWFP Reject Recovery Facility Equipment Order Proposal

Submitted to:
Greg Kowalski, P.E.
Senior Civil Engineer
Eastern Municipal Water District

May 16, 2012

Proposal Number 217529 Rev.4

Submitted By:
Andrew Sparkes
GE Water
PH 905-465-3030 ext 3409

Local Representation by:
Bruce Zimmerman
Coombs Hopkins Company
PH 760 931-0555

GE Water & Process Technologies
Confidential and Proprietary Information

GE Water & Process Technologies Canada (SELLER) submits the information contained in this document for evaluation by CONTRACTOR only. CONTRACTOR agrees not to reveal its contents except to those in CONTRACTOR's organization necessary for evaluation. Copies of this document may not be made without the prior written consent of GE Water & Process Technologies management. If the preceding is not acceptable to CONTRACTOR, this document shall be returned to GE.

1 Introduction

ZENON Environmental Corporation c/o GE Water & Process Technologies Canada is pleased to offer this GE equipment order proposal in combination with the GE Final Submittal D-5.0 for the Eastern Municipal Water District (EMWD) PWFP Reject Recovery Facility. This proposal supersedes all other proposals submitted previously by GE. The resulting contract will facilitate the commencement of construction and determine the completion of the design engineering by SELLER and the construction tender documents by CONTRACTOR.

2 Scope of Supply

The mechanical and instrumentation Scope of Supply by GE is detailed in the Piping & Instrumentation Diagrams (P&IDs) and as per the Bill of Materials included with the GE Final Submittal D-5.0. For clarity, the P&IDs submitted with the GE Final Submittal D-5.0 are included in Appendix A of this proposal. Equipment shown in solid line and identified by a tag number is included in the Scope of Supply by GE whereas equipment shown in dotted line is by CONTRACTOR unless stated otherwise.

In addition, the following items, which are not listed in the GE Final Submittal D-5.0, are included in GE's Scope of Supply:

- ❑ Control System Equipment
- ❑ General Items
- ❑ Spare Parts
- ❑ Field Services – Commissioning

Control System Equipment

Control System Equipment	
Equipment	**Qty**
PLC system c/w HMI for equipment integral to the ZeeWeed® Membrane Filtration System. Enclosures with train panels rated NEMA 4X and master panel rated NEMA 12.	lot

General Items

General
Equipment General Arrangement and Layout Drawings
Operating & Maintenance Manuals
Equipment Delivery FOB Perris Water Filtration Plant Site, Perris, CA
Seven (7) Year Prorated Membrane Warranty (First two (2) years are Full Replacement Warranty)
Two (2) Year Mechanical Warranty
One (1) Year of Zenotrac™ Monitor Service (includes data acquisition computer and software set-up)

Spare Parts

Spare parts, as listed in the specifications Section 11400, page 13 of 44, Article 1.4, are included in the Total Contract Price.

Field Services - Commissioning

The following is a summary of the onsite Technical Support Services provided by GE and included in the Total Contract Price. Services will be provided by trained GE Commissioning Representatives or Manufacturer's Representative.

Task	No. of Person Days	No. of Trips
Pre-Commissioning Assistance	3	1
Plant Commissioning and Start-up Assistance	18	1
Operator Training	5	1
Assistance During Performance Testing or 90-Day Operational Testing	12	12
Total	**38**	**15**

The above summary meets or exceed the specified requirements. Based on years of experience GE has included typical services needed to meet the project requirements.

In addition to the on-site staffing of a minimum of one (1) day per week during the 90-Day Operational Testing period as requested by the RFP, GE will be available via telephone during regular business hours and accessible through the 24/7 support line during off hours.

Additional Commissioning Services

Additional Services required, beyond what has been included in the Field Services – Commissioning table above, are chargeable at the rates indicated in GE's prevailing Field Service Labor Rates Sheet. These rates are effective as of January 1st this year, and are subject to adjustment at yearly intervals on December 31st using the Consumer Price Index (CPI) for All Urban Consumers All Items, Los Angeles-Riverside-Orange County, California (1982-84=100). Please contact GE for more information.

Service Labor Rates - US Sites

All currency figures are in US dollars	Week Days		Weekend Days & Statutory Holidays	
On Site	**/ Hour**	**/ Day**	**/ Hour**	**/ Day**
Service Representative	$ 130	$ 1,300	$ 185	$ 1,850
Programmer or Process Engineer	$ 145	$ 1,450	$ 210	$ 2,100
Off Site - including trip preparation, travel time, telephone support, and reporting.				
Service Representative	$ 110		$ 155	
Programmer or Process Engineer	$ 145	$ 1,450	$ 210	$ 2,100

This rate sheet applies to short, unplanned work where time factors are constrained or unpredictable. For longer assignments and foreseen requirements, please request a Service proposal or a specific quotation.

Scheduling - Service requests for USA and international sites should be directed to our Oakville, Ontario office with one exception. Service requests specific to the western USA should be directed to our Vista office, located at 760 Shadowridge Drive, Vista, California, 92083-7986. Contact Seth Ginter, Manager – Technical Services at Ph (760) 305-0157 and Fx (760) 305-0173.

Terms

1) The On Site labor charges are based on a not-to-exceed 10-hour workday. Hours in excess of the 10-hour day will be invoiced at 1.5 times the applicable labor rate.
2) An Emergency Surcharge will be applied to any urgent call-out for unscheduled emergency work requiring immediate deployment and requiring disruption of already scheduled work. The Emergency Surcharge will be determined on a case-by-case basis.
3) Business hours for daytime Technical Support by telephone are 8:30 am to 5:00 pm from Monday to Friday for the time zone in which the support office is located.
4) Statutory Holiday rates will be applied based on the statutory holidays prevailing in the country where the work is being performed.
5) Delays due to site or schedule factors will be invoiced at the rates shown above.
6) For extended duration work, staff rotations are scheduled on a monthly basis and may be subject to travel expense charges.
7) Automobile mileage expenses will be invoiced at $ 0.48 per mile.
8) Hotel, airfares, flight change fees and related travel expenses will be invoiced at 1.15 times cost.
9) Meals, unless otherwise indicated, will be invoiced at $ 52.00 per day.
10) State taxes, Use taxes, withholding taxes and all other taxes are extra where applicable. The Client is responsible to provide any applicable tax exemption certificates with its purchase order or work order.
11) For preparation of Purchase Orders and checks, ZENON Environmental Corporation is the name of the legal entity providing services in the USA. ZENON Environmental Corporation is an affiliate of GE Water & Process Technologies Canada. All services provided are governed by the prevailing version of the GE Water & Process Technologies Terms and Conditions - Services.
12) Rates are valid through contract completion. Therefore, rates are subject to adjustment at yearly intervals on December 31st using the CPI for all Urban Consumers, All Items, Los Angeles-Riversisde-Orange County, CA (1982-84=100)

2.1 Scope of Supply by General Contractor

The following items are for supply by the Construction Contractor or OTHERS and will include, but are not limited to:

- ❑ Overall plant design;
- ❑ Review of equipment drawings and specifications;
- ❑ Unloading of delivered equipment at the FOB site including receiving, sign-off and safe storage of equipment at site until ready for installation. Construction Contractor to provide suitable warehousing at or near the site for storage of the materials.
- ❑ Storage of membrane cassettes on site, if necessary. Cassettes must be stored in a sheltered area, protected from direct sunlight and/or extreme heat(max temperature 95 Deg F), and sealed as shipped until ready for use. It is recommended that the cassettes not be stored longer than necessary prior to installation. Coordinate with GE W&PT for appropriate shipment times.
- ❑ Equipment installation (GE W&PT to provide installation instructions) including, but not limited to the following:
  - Installation of any other loose-shipped GE W&PT supplied equipment not listed specifically in the proposal;
  - Alignment of pumps;
  - Supply and installation of all required oil and lubrication for equipment start-up and initial operations as per the manufacturer's literature for the specific piece of equipment;
  - Flushing of all piping and membrane tanks and verification of removal of all residual debris from construction;
  - Installation & removal of suitable temporary screens on all process lines entering the membrane basins to prevent foreign construction related debris from coming in contact with the membranes. Debris found within the tank can potentially void membrane warranties or require immediate replacement of damaged cassettes;
  - Providing assistance where necessary to electrical trades in the accomplishment of functions requiring mechanical tradesmen (including pipe fitters and any other trade within the scope of this contract);
  - Touch up primer and finish paint surfaces on equipment as required at the completion of the project;
- ❑ Facilities for the disposal of raw water screening and pretreatment of feed water;
- ❑ Civil and structural works, provision of main plant structures, tank construction, buildings, equipment foundation pads etc. including, but not be limited to the following:
- ❑ Construction of foundation pads for the major process equipment;

- Equipment access platforms, walkways, stairs etc. (GE will provide removable membrane cassette access platform for service access)
- Equipment anchor bolts;
- Design, supply, installation and testing of process and utilities piping, pipe supports, hangers, valves etc. supplied by the general contractor including but not limited to the following:
- All piping shall be tested according to the project requirements
- All dotted piping as indicated on the GE W&PT P&IDs
- All small bore piping and tubing for instruments and loose shipped valves;
- Pipe supports, hangers etc. for all piping systems;
- Temporary piping systems required for the start-up and commissioning of the GE W&PT equipment. Typically the provision of a re-circulation loop between the permeate header and the tank inlet channel/pipe is required for the start-up of the GE W&PT system to allow for testing prior to delivery of water to the distribution system;
- Design, supply and installation of all power and instrumentation interconnecting wiring, optical fibers, conduit and appurtenances from the control panels, MCC's etc. to field mounted instruments, motors, valves/valve actuators and any other equipment supplied by GE W&PT including, but not limited to;
- Electrical wiring interconnections (including wiring, conduit and any other appurtenances required to provide power connections as needed) from the electrical power source to the PLC Panel(s) and the Motor Control Center(s);
- Electrical wiring interconnections (including wiring, conduit and any other appurtenances required to provide power connections needed) from the Motor Control Center to the various pumps, blowers and other equipment associated with the membrane filtration system;
- Instrumentation wiring, conduit and other appurtenances required to provide connections as needed between the various field mounted valves and instruments to the Local Panel(s) and between any Local Panels and the Master PLC Panel
- All junction boxes, disconnect switches and local operator controls required by the contract drawings and specifications, site standards and local codes and regulations
- Design, supply, programming and integration of plant SCADA system including interfacing with GE W&PT supplied control system. Supply and installation of the SCADA processor, all PLC code preparation, SCADA configuration, integration and testing.
- Supply and installation of miscellaneous materials for pneumatic instrumentation and valves including but not limited to; air/sample line tubing, fittings, isolating valves & mountings.
- Any backwash or wastewater processing facilities & equipment that may be required including but not limited to:

- ❑ Any additional required analyzing & monitoring instruments;
- ❑ Backwash/CIP wastewater re-pumping equipment, pipe and valves, if deemed necessary.
- ❑ Any Backwash/CIP wastewater processing & neutralization facilities and equipment
- ❑ Design, supply and installation of equipment for pumping the treated water to the distribution system;
- ❑ Any raw materials, and utilities during equipment start-up and operation including a supply of raw water feed that meets all design parameters for the successful commissioning of the membrane equipment;
- ❑ Chemical totes and any chemicals for operation;
- ❑ Laboratory services, operating and maintenance personnel required during equipment checkout, start-up and operation;
- ❑ Any on-site painting or touch-up painting of equipment supplied;
- ❑ Variable Frequency Drives (VFD) and Motor Control Centre (MCC);
- ❑ Overhead Travelling Beam Crane or Monorail(s) & Pulley/Hoist above the process tanks for installation and removal of the membrane cassettes from the membrane tanks. Weight of a wet cassette is **~6,000 lbs**.
- ❑ Collection and disposal offsite as applicable for spent water, including disposal of membrane rinse and flush waters. The rinse and flush water contains glycerine used as preservative. As this water can have a COD of 9,000 mg/L during the first flush cycle, planning and coordination with local authorities should be considered in advance. Typical volumes expected are three (3) full membrane tanks times the number of trains in the project.
- ❑ Electrical Distribution System:
  - The proposed GE W&PT system incorporates modern controls including programmable logic controller, operator interface, and many instruments. The electrical distribution system in the plant design can materially affect the reliability and performance of the equipment provided.
  - In order to ensure long-term reliable operation, GE W&PT recommends that the CONTRACTOR engage an industrial qualified electrical contractor who is able to design, install and set up the following functions:
  - Facility ground with a ground grid resistance less than 5 ohms;
  - Lightning protection integrated with the facility ground;
  - Transient suppression at point of entry;
  - Electrical distribution with single point grounding;
  - Load balancing to ensure a facility ground current of less than 5 amps;
  - Harmonics control to achieve a total harmonic distortion level of less than 5%.

- Detailed methods for implementing each of these functions are available upon request from GE W&PT. GE W&PT's recommended best practices are based on the best practices standards from IEEE and NEC or other national electrical code and ensure a good trade-off between initial installation costs and long-term system reliability.
- An adequate and continuous power supply is available that will enable all operation of all required equipment.
- The purchaser or owner shall supply competent operating, supervisory and maintenance staff, and necessary laboratory facilities with test equipment and personnel.

3 Schedule and Project Delivery

The schedule and project delivery is in accordance with Eastern Municipal Water District Specifiation No. 1169W PWFP Reject Recovery Facility GE Pre-Negotiated Membrane Supply Proposal (#217529) Section SSR*Supplemental Special Requirements (SSR)*, included in Appendix B of this proposal.

4 Commercial Offer

4.1 Pricing

The GE equipment order Total Contract Price for the Eastern Municipal Water District (EMWD) PWFP Reject Recovery Facility shall be as follows:

PWFP – RRF SPEC 1169W	Value w/o Taxes	Taxable	Value with Taxes
Shop Drawings Note 1 - *Tax Exempt* Note 1	$243,764	No	$243,764
PLC Programming *Custom programming services performed in connection with the sale of computer equipment* - *Tax Exempt* Note 1	$42,195	No	$42,195
Commissioning/Start-up *The performance of professional services* - *Tax Exempt* Note 1	$80,900	No	$80,900
Operator Training *The performance of professional services* - *Tax Exempt* Note 1	$9,965	No	$9,965
Freight *Separately stated charges for delivery, freight* - *Tax Exempt* Note 1	$37,440	No	$37,440
Cost of Year 1 Performance Contract / Agreement - *Tax Exempt* Note 1	$14,710	No	$14,710
Cost of 2-Year Extended Equipment Warranty - *Taxable* Note 1	$13,139	Yes	$14,157
Plant Equipment and Others Note 2 *California sales tax is imposed when making sales of tangible property in the state – Taxable* Note1	$1,265,492	Yes	$1,363,568
Adder for Plant Equipment and Others Note 3 - *Taxable* Note 1	$167,802	Yes	$180,807
Total Contract Price	$1,875,407		$1,987,506

Note 1: Must be shown as a separate line item on PO and invoice. Project Tax Rate is 7.75%.

Note 2: Price for Plant Equipment and Others as per the original proposal #217529.

Note 3: Includes previously negotiated adders/deducts for blowers, actuators, permeate pump, CIP delivery pump, reject pump, CIP waste pump, feed pumps, miscellaneous changes to instruments, deletion of chemical systems, inclusion of inlet baffles, access platform, tank filters, and the deletion of redundant PLCs.

4.2 Warranty

The membrane system equipment warranty, software warranty, system performance warranty, extended membrane module warranty , and the guaranteed membrane module purchase price (MMPP) associated with the GE equipment order Total Contract Price are in accordance with *Eastern Municipal Water District Specification No. 1169W, PWFP Reject Recovery Facility Project, Section SSR – Supplemental Special Requirements*, which can be found in Appendix B of this proposal.

In addition, the seven (7) year membrane warranty (two (2) years full-replacement followed by five (5) years prorated) as well as the membrane module replacement price can be found in the *Seller's Warranty – ZeeWeed® Membrane Modules Prorated Replacement* in Appendix C of this proposal.

The following statements on LRV and chemical addition provide a summary of the important warranty conditions GE will maintain for this project that are not included in the GE Final Submittal D-5.0, nor Appendix B or Appendix C, found at the end of this proposal.

LRV – Log Removal Value

Guaranteed Membrane Filtration System Performance – Water Quality

Membrane Filtration System Permeate Quality	
Turbidity (NTU) Note 1	≤ 0.1 NTU 95% of the time
LRV Notes 2 to 6	1.5 Log

Note 1: The turbidity guarantee stated above can only be guaranteed if proper maintenance and calibration of the turbidimeters is performed regularly, and in accordance with manufacturer's instructions.

Note 2: The LRV guarantee is set for a resolution of defects equal to or greater than 3 microns.

Note 3: The test pressures for the Integrity Test are based on third-party data obtained by GE for the contact angles used in the LRV calculations. The contact angles vary between 53° and 65° depending on the product supplied.

Note 4: The LRV calculations are to be done with actual operating parameters for the membranes at the time of the Membrane Integrity Test. The operating transmembrane pressure, flow rate, and water temperatures are to be used in the calculations.

Note 5: The VCF (Volumetric Concentration Factor) used in the LRV calculations is a maximum of 1.5 for deposition mode as per the third-party data obtained by GE. Other operating modes that are variations of the suspension modes are to use the theoretical average VCF of the system throughout the filtration cycle, not the maximum VCF value attained during the cycle.

Note 6: Due to the concentration of solids through the process, the effect of the volumetric concentration factor has to be taken into account in the LRV calculations. The VCF is 333.

Chemical Addition

The use of any chemicals added to the treatment process (e.g. polymers, flocculants, coagulants, coagulant aids, oxidants, hydrochloric and citric acids, bases...) that may come in contact with the ZeeWeed® membranes must be approved by SELLER prior to use as part of this proposal or at a subsequent date later on during plant operation. This includes, but is not limited to, chemicals used in the feed water to the membranes as well as processes outside of the SELLER system that may be recycled or transferred directly or indirectly to the SELLER system, such as in backwash waste or solids handling facilities. Pretreatment chemicals dosages should be properly optimized by the client based on feed water quality and membrane requirements.

See Appendix D for performance tables.

4.3 Terms of Payment

The Total Contract Price quoted in Section 4.1 of this proposal is based on the following payment terms, subject to approval of CONTRACTOR Credit (all payments are net 45 days). These payments terms apply to the CONTRACTOR:

Payment 1 - Special Engineering Services, Adder for Engineering Services, and PLC Programming

- ❑ 15% of Total Contract Price Upon Contractor Novation or Notice To Proceed (NTP);

Payment 2 - Plant Equipment and Others, Adder for Plant Equipment and Others, and Freight, excluding membranes

- ❑ 47.4% of Total Contract Price Upon Equipment Delivery (partial shipments permitted);

Payment 3 - Plant Equipment and Others, Adder for Plant Equipment and Others, and Freight, for membranes only

- ❑ 31.6% of Total Contact Price Upon Membrane Delivery;

Payment 4 - Commissioning/Start-Up and Operator Training

- ❑ 4.5% of Total Contract Price Upon Completion of Commissioning and Operator Training;

Payment 5 - Cost of Year 1 Performance Contract/Agreement and Cost of 2-Year Extended Equipment Warranty

- ❑ 1.5% of Total Contract Price Upon Plant Acceptance.

Equipment shipment is contingent on receipt of earlier milestone payments.

The payment terms listed were determined using values, with taxes, where applicable, at a tax rate of 7.75%, as detailed in Section 4.1 of this proposal.

4.4 Terms and Conditions

The terms and conditions associated with the GE equipment order Total Contract Price are in accordance with *Eastern Municipal Water District Specification No. 1169W PWFP Reject Recovery Facility and GE Pre-Negotiated Membrane Supply Proposal (#217529)*, Section SSR Suppemental Special Conditions which can be found in Appendix B of this proposal.

Appendix A – Piping and Instrumentation Diagrams (P&IDs)

Drawing Set for

EMWD PWFP REJECT
RECOVERY FACILITY

GE Water & Process Technologies

imagination at work

Project Number: 200515

CONTROL VALVE ACTUATORS

- PISTON DOUBLE ACTING
- PISTON SPRING TO OPEN
- PISTON SPRING TO CLOSE
- DIAPHRAGM DOUBLE ACTING
- DIAPHRAGM SPRING TO OPEN
- DIAPHRAGM SPRING TO CLOSE
- DIAPHRAGM DOUBLE BALANCING
- BACK PRESSURE CONTROL (EXTERNAL REGULATING)
- BACK PRESSURE CONTROL (INTERNAL REGULATING)
- PRESSURE REDUCING (EXTERNAL REGULATING)
- PRESSURE REDUCING (INTERNAL REGULATING)
- (M) ROTARY MOTOR ANALOG
- (M) ROTARY MOTOR DIGITAL
- I/P CONVERTER
- POSITIONER
- TRAVEL STOP
- GEAR MANUAL GEAR WHEEL
- CHAIN MANUAL CHAIN WHEEL
- S, A, B SOLENOID
- S, A, B, C SOLENOID 3 WAY
- S, D, A, B, C SOLENOID 4 WAY

VALVE SYMBOLS

(VALVES NORMALLY OPEN EXCEPT WHEN SHADED)

- GATE (OR GENERIC)
- BALL
- BUTTERFLY
- NEEDLE
- GLOBE
- DIAPHRAGM
- ANGLE
- PLUG
- PINCH
- V-BALL
- K KNIFE GATE
- UPWARD OPENING SLIDING GATE
- DOWNWARD OPENING SLIDING GATE
- MANUAL BLAST GATE
- BACKFLOW PREVENTER
- CHECK
- INJECTION QUILL
- FOOT
- FLOAT
- MUD
- 3 WAY
- 4 WAY
- 5 WAY
- 6 WAY
- 2 VALVE MANIFOLD
- 3 VALVE MANIFOLD
- 5 VALVE MANIFOLD
- SAMPLE

RELIEF

- PRESSURE SAFETY
- VACUUM SAFETY
- MULTIFUNCTION
- PRESSURE RUPTURE DISK
- VACUUM RUPTURE DISK
- AIR RELEASE
- VACUUM BREAKER
- VENT VENT
- GROUND
- DRAIN DRAIN

PUMPS, BLOWERS, & COMPRESSORS

- CENTRIFUGAL PUMP
- CENTRIFUGAL/ REGENERATIVE BLOWER
- PROPELLER PUMP
- ROTARY LOBE COMPRESSOR BLOWER
- METERING PUMP
- AIR OPERATED DOUBLE DIAPHRAGM PUMP
- VACUUM PUMP (DRY)
- POSITIVE DISPLACEMENT PUMP
- VACUUM PUMP LIQUID RING
- VERTICAL TURBINE PUMP
- AIR COMPRESSOR PISTON
- CAN PUMP
- AIR COMPRESSOR ROTARY SCREW
- WELL PUMP
- REFRIGERATED AIR DRYER
- DRUM PUMP
- FAN
- SUBMERSIBLE SUMP PUMP
- HP/LP ERI PRESSURE EXCHANGER
- HP/LP HYDRAULIC PRESSURE BOOSTER
- (M) MOTOR

FLOW ELEMENT

- PADDLE WHEEL
- ANNUBAR
- FLOW NOZZLE
- FLUME
- (M) MAGNETIC
- PITOT
- SONIC/ ULTRASONIC
- TURBINE
- VENTURI TUBE
- VORTEX
- MASS FLOW/ CORIOLIS
- ROTAMETER
- (FG) IN-LINE FLOW GLASS
- FLOW STRAIGHTENER
- FIXED ORIFICE
- ADJUSTABLE ORIFICE
- RESTRICTED ORIFICE
- RESTRICTED ORIFICE ANGLE
- ORIFICE PLATE QUICK-CHANGE

CONNECTIONS

- FLANGE
- FLANGE BLIND
- MECHANICAL COUPLING OR VICTAULIC
- MECHANICAL COUPLING OR VICTAULIC PLUG
- SANITARY
- SANITARY PLUG
- THREADED
- THREADED PLUG
- SOCKET
- UNION
- CAMLOCK
- CAMLOCK PLUG
- HOSE BARB
- WELDED PIPE CAP
- PLAIN END PIPE COUPLING
- REDUCER
- COMPRESSION FITTING
- COMPRESSION FITTING PLUG
- SPECTACLE BLIND OPEN
- SPECTACLE BLIND CLOSED

HEATING

- TANK HEATER
- HEAT EXCHANGER
- IN-LINE HEATER
- PLATE & FRAME HEAT EXCHANGER
- DESUPERHEATER

FILTERS

- FIXED SCREEN
- TOP HAT STRAINER
- BAR SCREEN
- HEPA FILTER
- Y STRAINER
- CONICAL STRAINER
- (F) FILTER
- PUMP SCREEN
- (ST) STEAM TRAP
- (R/T) RESIN TRAP

RO/UF

- FOUR PORT HOUSING
- TWO PORT HOUSING
- END PORT HOUSING
- MEMBRANE MODULE

VESSELS/TRIM

- CONICAL BOTTOM TANK
- TANK (CLOSED TOP)
- TANK (OPEN TOP)
- DOMED TANK
- PRESSURE VESSEL HORIZONTAL/ VERTICAL OR RECEIVER
- (M) PROPELLER AGITATOR
- (VB) VORTEX BREAKER
- VESSEL INSULATION
- LEVEL GLASS
- ELLIPTICAL MANWAY
- MANHOLE
- MANHOLE W/ DAVIT ARM
- VESSEL SIGHT GLASS
- WATER LEVEL
- LADDER/ PLATFORM

MISCELLANEOUS

- MUFFLER
- EDUCTOR
- STATIC MIXER
- EXPANSION JOINT
- SILENCER
- VIBRATION ISOLATOR
- HIGH PRESSURE FLEXIBLE CONNECTOR
- INJECTION SPARGER
- DIAPHRAGM SEAL/ GUAGE GUARD
- PULSATION DAMPENER
- SPRAYER NOZZLE
- DESICCANT AIR DRYER
- HYDROMETER POT
- COARSE BUBBLE DIFFUSER ELEVATION VIEW
- FINE BUBBLE DIFFUSER ELEVATION VIEW
- THERMOWELL
- TOP MOUNT LEVEL SWITCH
- ULTRASONIC LEVEL
- CALIBRATION COLUMN
- XXX / XXX PIG TAIL
- ION EXCHANGE BOTTLE

SCOPE BREAK

- CLIENT/OTHER
- GEWPT

MATERIAL BREAK

- MATERIAL A / MATERIAL B

PIPE INSULATION/ DOUBLE CONTAINMENT

- PP 2" ("PP" INDICATES PERSONNEL PROTECTION –OPTIONAL)

LINE TYPES

- PRIMARY PROCESS
- SECONDARY PROCESS
- SAMPLE/DRAINS/ VENTS/ETC
- PRIMARY PROCESS (BY OTHERS)
- SECONDARY PROCESS (BY OTHERS)
- FUTURE
- EQUIPMENT LIMIT OR BOUNDARY LINE
- EQUIPMENT
- EQUIPMENT (BY OTHERS)
- FLEX HOSE/TUBING
- SOFTWARE–LINK
- ELECTRICAL
- ELECTROMAGNETIC OR SONIC SIGNAL (WIRELESS)
- PNEUMATIC
- HYDRAULIC SIGNAL
- CAPILLARY TUBING
- HEAT–TRACING
- STEAM–TRACE
- ELECTRICAL–TRACE

MISCELLANEOUS LINE OBJECTS

- SLOPE
- CONTINUATION SYMBOL
- CONTINUATION SYMBOL
- CROSSOVER LINE
- REVISION CLOUD
- 1 REVISION TRIANGLE

REV	DESCRIPTION	ECO	DWN	APVD	DATE	CHKD
0	ISSUED FOR APPROVAL		AK		28APR11	R.P

TOLERANCES UNLESS NOTED
DECIMALS: .X ± .XX ± .XXX ±
ANGLES ± FRAC ±
DIMENSIONS IN INCHES
DO NOT SCALE
THIRD ANGLE

DRAWN BY	AK
DATE	28APR11
CHECKED BY	R.P
DATE	28APR11
APPROVED BY	
DATE	
APPROVED BY	
DATE	

GE Water & Process Technologies
GLOBAL HEADQUARTERS : TREVOSE, PA USA +1-215-355-3300 WWW.GEWATER.COM

THIS DRAWING, THE DESIGN AND THE PATENTS IT COVERS, IS THE PROPERTY OF GENERAL ELECTRIC COMPANY AND ITS AFFILIATES AND THE INFORMATION CONTAINED HEREIN IS PROPRIETARY INFORMATION WHICH IS NOT TO BE DISCLOSED TO ANYONE WITHOUT PRIOR WRITTEN CONSENT OF SAID COMPANY. THIS DRAWING IS TO BE USED EXCLUSIVELY FOR THE PURPOSES EXPRESSLY AUTHORIZED BY GENERAL ELECTRIC COMPANY AND ITS AFFILIATES THROUGH ITS OFFICERS AND QUALIFIED REPRESENTATIVES AND FOR NO OTHER PURPOSE. NEITHER THIS DRAWING, NOR ANY PORTION THEREOF, SHALL BE REPRODUCED WITHOUT THE PRIOR WRITTEN CONSENT OF SAID COMPANY, AND ANY SUCH REPRODUCTION SHALL BEAR THIS NOTICE.

CLIENT/JOB	EMWD PWFP REJECT RECOVERY FACILITY
FILE	MICROSTATION
TITLE	PIPING & INSTR DIAGRAM LEGENDS & SYMBOLS
MATERIAL	
SIZE	D
DRAWING NO.	200515-AP-01
REV	0
PROJECT	200515
SCALE	N.T.S.
SHEET	1OF2

P/N 1161662-RHP01

INSTRUMENT FUNCTIONS

FIRST LETTER	MEASURED OR INITIATING VARIABLE	A: ALARM	A: HIGH- HIGH ALARM	A: HIGH ALARM	A: LOW ALARM	A: LOW-LOW ALARM	A: SENSOR FAULT ALARM	C: BLIND CONTROLLER	C: INDICATING CONTROLLER	E: SENSOR (PRIMARY ELEMENT)	G: GLASS	I: INDICATOR	L: PILOT LIGHT	Q: TOTALIZER	R: RECORD	S: SWITCH	S: HIGH-HIGH SWITCH	S: HIGH SWITCH	S: LOW SWITCH	S: LOW-LOW SWITCH	T: BLIND TRANSMITTER	T: INDICATING TRANSMITTER	Y: SOLENOID VALVE (PILOT), RELAY, COMPUTATION, CONVERTER	V,Z: CONTROL VALVE	V,Z: VALVE	V,Z: FINAL CONTROL ELEMENT	SPECIAL IDENTIFICATION: SYMBOL	SPECIAL IDENTIFICATION: DESCRIPTION
A	ANALYSIS	AA	AAHH	AAH	AAL	AALL	AAT	AC	AIC	AE		AI	AL		AR	AS	ASHH	ASH	ASL	ASLL	AT	AIT	AY	ACV	AV	AZ		
B	BURNER, COMBUSTION																											
C	USER'S CHOICE																											
D	USER'S CHOICE																											
E	VOLTAGE	EA	EAHH	EAH	EAL	EALL	EAT	EC	EIC	EE		EI	EL		ER	ES	ESHH	ESH	ESL	ESLL	ET	EIT	EY			EZ		
F	FLOW	FA	FAHH	FAH	FAL	FALL	FAT	FC	FIC	FE	FG	FI	FL	FQI	FR	FS	FSHH	FSH	FSL	FSLL	FT	FIT	FY	FCV	FV		FO	ORIFICE PLATE
FF	FLOW RATIO	FFA	FFAHH	FFAH	FFAL	FFALL		FFC	FFIC			FFI			FFR	FFS	FFSHH	FFSH	FFSL	FFSLL			FFY	FFCV				
G	USER'S CHOICE																											
H	HAND	HA						HC	HIC				HL			HS								HCV	HV		HMS	PUSHBUTTON SWITCH
I	CURRENT (ELECTRICAL)	IA	IAHH	IAH	IAL	IALL	IAT	IC	IIC	IE		II	IL		IR	IS	ISHH	ISH	ISL	ISLL	IT	IIT	IY			IZ		
J	POWER	JA	JSHH	JAH	JAL	JALL	JAT	JC	JIC	JE		JI	JL	JQI	JR	JS	JSHH	JSH	JSL	JSLL	JT	LIT	JY			JZ		
K	TIME SCHEDULE	KA										KI	KL			KS							KY					
KQ	TIME TOTAL	KQA	KQAHH	KQAH	KQAL	KQALL						KQI	KQL		KQR	KQS	KQSHH	KQSH	KQSL	KQSLL								
L	LEVEL	LA	LAHH	LAH	LAL	LALL	LAT	LC	LIC	LE	LG	LI	LL		LR	LS	LSHH	LSH	LSL	LSLL	LT	LIT	LY	LCV	LV			
M	MOTOR CONTROL															MS												
N	USER'S CHOICE																											
O	USER'S CHOICE																											
P	PRESSURE OR VACUUM	PA	PAHH	PAH	PAL	PALL	PAT	PC	PIC			PI	PL		PR	PS	PSHH	PSH	PSL	PSLL	PT	PIT	PIT	PY	PV		PSV	PRESSURE SAFETY VALVE
PD	PRESSURE DIFFERENTIAL	PDAP	DAHH	PDAH	PDAL	PDALL	PDAT	PDC	PDIC			PDI	PDL		PDR	PDS	PDSHH	PDSH	PDSL	PDSLL	PDT	PDIT	PDY	PDCV				
Q	QUANTITY													QQI														
R	RADIATION																											
S	SPEED OR FREQUENCY	SA	SAHH	SAH	SAL	SALL	SAT	SC	SIC	SE		SI	SL		SR	SS	SSHH	SSH	SSL	SSLL	ST	SIT	SY	SCV		SZ	SK	SPEED CONTROL STATION
T	TEMPERATURE	TA	TAHH	TAH	TAL	TALL	TAT	TC	TIC	TE		TI	TL		TR	TS	TSHH	TSH	TSL	TSLL	TT	TIT	TY	TCV	TV	TZ	TW	THERMOWELL
U	MULTI-VARIABLE																											
V	VIBRATION OR MECH. ANALYSIS	VA	VAHH	VAH			VAT			VE		VI	VL		VR	VS	VSHH	VSH			VT	VIT	VY					
W	WEIGHT OR FORCE	WA	WAHH	WAH	WAL	WALL	WAT	WC	WIC	WE		WI	WL	WQI	WR	WS	WSHH	WSH	WSL	WSLL	WT	WIT	WY	WCV	WV	WZ		
X	UNCLASSIFIED																											
Y	EVENT, STATE OR PRESENCE	YA										YI	YL		YR	YS												
Z	POSITION OR DIMENSION	ZA	ZAO=OPEN		ZAC=CLOSE		ZAT	ZC	ZIC	ZE	ZG	ZI	ZL		ZR	ZS	ZSO=OPEN		ZSC=CLOSE		ZT	ZIT	ZY	ZCV	ZV	ZZ		

INSTRUMENT SYMBOLS

- PANEL MOUNT INSTRUMENT
- FIELD MOUNT OR PRIMARY INSTRUMENT
- BEHIND PANEL INSTRUMENT
- PILOT LIGHT
- PLC FUNCTION WITH DISPLAY
- PLC FUNCTION, BLIND
- PLC INPUT/OUTPUT

DI _ DISCRETE INPUT
DO _ DISCRETE OUTPUT
AI _ ANALOG INPUT
AO _ ANALOG OUTPUT

FUNCTIONS

- UNDEFINED INTERLOCK LOGIC (I)
- SUMMING (Σ)

CONTINUATION ARROWS

SERVICE
A | SHEET X
FLOW:
PRESSURE:
TEMP:
FLOW-SINGLE DIRECTION

SERVICE
A | SHEET X
FLOW:
PRESSURE:
TEMP:
FLOW-BOTH DIRECTIONS

A
TRANSFER ARROW TO SAME SHEET

1 | PID NUMBER SHEET X
ELECTRICAL TRANSFER ARROW TO DIFFERENT PID DOCUMENT

1
ELECTRICAL TRANSFER ARROW TO SAME PID DOCUMENT

EQUIPMENT / INSTRUMENT TAGGING SCHEME

11-XXX-222A-3

- 11 — IDENTICAL SKID/TRAIN IDENTIFIER (IF NECESSARY)
- XXX — MULTIPLE INSTRUMENT IDENTIFIER (IF NECESSARY)
- 222 — EQUIPMENT NUMBER/ INSTRUMENT LOOP NUMBER
- A — EQUIPMENT ABBREVIATION/ INSTRUMENT FUNCTION
- 3 — PROCESS AREA

LINE IDENTIFIER

X"-XXPPPA-SNN

- X" — LINE CLASS SPECIFICATION
- XX — SCHEDULE (OPTIONAL)
- PPP — SERVICE DIFFERENTIATOR (OPTIONAL)
- A — PR CODE (OPTIONAL)
- S — MATERIAL CODE
- NN — PIPE SIZE

MATERIAL CODE	MATERIAL
CC	CONCRETE
	METALLIC
AUST	AUSTENITIC STAINLESS STEEL
AY	ALLOY 20
CI	CAST IRON
CS	CARBON STEEL
CU	COPPER
DI	DUCTILE IRON
DL	PVDF LINED
DUPL	DUPLEX STAINLESS STEEL
HC	HASTELLOY C
PL	POLYPROPYLENE LINED
SA	304, 304L STAINLESS STEEL
SB	AL-6XN
SC	254-SMO
SD	2205
SE	2507
SF	904L
SG	ZERON 100
SS	316, 316L STAINLESS STEEL
SUAU	SUPER AUSTENITIC STAINLESS STEEL
TL	PTFE LINED
	PLASTIC
CP	CPVC
FR	FIBER REINFORCED PLASTIC
PE	POLYETHYLENE
PP	POLYPROPYLENE
PV	PVC
PD	PVDF
PT	PTFE

PR CODE	CLASS
	METALLIC
125	ANSI CLASS 125
150	ANSI CLASS 150
300	ANSI CLASS 300
400	ANSI CLASS 400
600	ANSI CLASS 600
900	ANSI CLASS 900
	PLASTIC
040	SCHEDULE 40
080	SCHEDULE 80
120	SCHEDULE 120
D64	SDR 64
D41	SDR 41
D32	SDR 32.5
D26	SDR 26
D21	SDR 21
D17	SDR 17
D13	SDR 13.5
	MULTIPLE
P06	PN6
P10	PN10
P16	PN16
P20	PN20
P50	PN50
P68	PN68
P100	PN100
A00	ATMOSPHERIC
V00	VACUUM

EQUIPMENT ABBREVIATIONS

AB	ABSORBER
AC	AIR COMPRESSOR
ACF	ACTIVATED CARBON FILTER
AER	AERATOR
ARV	AIR RELEASE VALVE
B	BLOWER
BF	BAG FILTER
C	CENTRIFUGE, CYCLONE
CD	CONDENSER
CDM	CATALYTIC DESTRUCT MODULE
CF	CARTRIDGE FILTER
CH	CHILLER
CHL	CHLORINATOR
CIP	CLEAN-IN-PLACE
CL	CLARIFIER
CONV	CONVEYOR
CORS	CATALYTIC OXYGEN REMOVAL SYSTEM
CP	CONTROL PANEL
CR	CRYSTALIZER
CS	CHEMICAL SYSTEM
CT	COOLING TOWER, CARBON TOWER
CV	CHECK VALVE
DAF	DISSOLVED AIR FLOATATION
DO	DISSOLVED OXYGEN
DMF	DUAL MEDIA FILTER
DR	AIR DRIER
E	EDUCTOR
EAF	ENTRAPPED AIR FLOATATION
ED	ELECTRODIALYSIS
EDI	ELECTRODEIONIZATION
EDR	ELECTRODIALYSIS REVERSAL
EV	EVAPORATOR
F	FILTER
FAN	FAN
FC	FAIL CLOSE
FDA	FORCED DRAFT AERATOR, DEGASIFIER
FO	FAIL OPEN
FL	FAIL LAST
FP	FILTER PRESS
GF	GRAVITY FILTER
H	HEATER
HF	HEPA FILTER
HMI	HUMAN-MACHINE INTERFACE
HOA	HAND-OFF-AUTO
HPB	HYDRAULIC PRESSURE BOOSTER
HX	HEAT EXCHANGER
IAS	INSTRUMENT AIR SUPPLY
IQ	INJECTION QUILL, INJECTION CHECK VALVE
IX	ION EXCHANGER
LS	LIME SOFTENER
M	MOTOR
MBR	MEMBRANE BIOREACTOR
MCC	MOTOR CONTROL CENTER
MD	MEMBRANE DEGASIFIER
MF	MICROFILTRATION
ML	MUFFLER, SILENCER
MMF	MULTIMEDIA FILTER
MX	MIXER
NF	NANOFILTRATION
OC	OXYGEN CONCENTRATOR
ORP	OXYGEN-REDUCTION POTENTIAL
OZ	OZONATOR
OZG	OZONE GENERATOR
P	PUMP
PD	PULSATION DAMPENER
PLC	PROGRAMMABLE LOGIC CONTROLLER
PSE	RUPTURE DISC
PUV	MULTIFUNCTION VALVE
PX	PRESSURE EXCHANGER
RO	REVERSE OSMOSIS
RP	ROTARY PRESS
RT	RESIN TRAP
SC	SCRUBBER
SCP	SCRAPER
SCR	SCREEN
SFT	SOFTENER
SKM	SKIMMER
SM	STATIC MIXER, INLINE MIXER
ST	STEAM TRAP
STK	MEMBRANE STACK (ED, EDR, EDI, E-CELL)
STR	STRAINER
SV	SAMPLE VALVE
TK	TANK
TOC	TOTAL ORGANIC CARBON
TRB	TURBINE
UF	ULTRAFILTRATION
UPS	UNINTERRUPTIBLE POWER SUPPLY
UV	ULTRAVIOLET IRRADIATOR
VB	VACUUM BREAKER
VD	VACUUM DEGASIFIER

REV	DESCRIPTION	ECO	DWN	APVD	DATE	CHKD
0	ISSUED FOR APPROVAL		AK		28APR11	R.P

TOLERANCES UNLESS NOTED
DECIMALS: .X ± .XX ± .XXX ±
ANGLES ±
FRAC ±
DIMENSIONS IN INCHES
DO NOT SCALE
THIRD ANGLE

DRAWN BY	AK	DATE 28APR11
CHECKED BY	R,P	DATE 28APR11
APPROVED BY		DATE
APPROVED BY		DATE

GE Water & Process Technologies
GLOBAL HEADQUARTERS : TREVOSE, PA USA +1-215-355-3300 WWW.GEWATER.COM

THIS DRAWING, THE DESIGN AND THE PATENTS IT COVERS, IS THE PROPERTY OF GENERAL ELECTRIC COMPANY AND ITS AFFILIATES AND THE INFORMATION CONTAINED HEREIN IS PROPRIETARY INFORMATION WHICH IS NOT TO BE DISCLOSED TO ANYONE WITHOUT PRIOR WRITTEN CONSENT OF SAID COMPANY. THIS DRAWING IS TO BE USED EXCLUSIVELY FOR THE PURPOSES EXPRESSLY AUTHORIZED BY GENERAL ELECTRIC COMPANY AND ITS AFFILIATES THROUGH ITS OFFICERS AND QUALIFIED REPRESENTATIVES AND FOR NO OTHER PURPOSE. NEITHER THIS DRAWING, NOR ANY PORTION THEREOF, SHALL BE REPRODUCED WITHOUT THE PRIOR WRITTEN CONSENT OF SAID COMPANY, AND ANY SUCH REPRODUCTION SHALL BEAR THIS NOTICE.

CLIENT/JOB: EMWD PWFP REJECT RECOVERY FACILITY
FILE: MICROSTATION
TITLE: PIPING & INSTR DIAGRAM LEGENDS & SYMBOLS
MATERIAL:

SIZE	DRAWING NO.	REV
D	200515-AP-01	0
PROJECT	200515	
SCALE N.T.S.	SHEET 2 OF 2	

P/N 1161662-RHP01

COMMUNICATED
INFLUENT FLOW SIGNAL

COMMUNICATED SIGNAL TO
SHUTDOWN THE SUBMERSIBLE
PUMPS 20-P-101-1/2

NO SECOND STAGE
TRAINS AVAILABLE

FROM FIRST STAGE
REJECT PUMP

10", CML & C

(SEE NOTE 2)

20-LIT
101

RANGE: 0 TO 144"

20-LI
101

AI

316L SS CPVC
6", SCH.10S, 316L SS

6", SCH.80, CPVC

20-HV-105
6"

20-FIC
101-1

20-FA
101-1

20-FIT
101-1

M

FEED WATER TO 20-TK-201-1

C 200515-AP-04

20-FIC
101-2

20-FA
101-2

20-FIT
101-2

FEED WATER TO 20-TK-201-2

C 200515-AP-04

OVERFLOW TO DRAINAGE

20-CV-101-1
6"

20-CV-101-2
6"

20-P-101-1/2
2ND STAGE FEED PUMPS
546 GPM @ 19' TDH
6.0 HP/ 460 VAC/ 3 pH/ 1200 RPM

20-TK-101
EQUALIZATION TANK
CONCRETE CONSTRUCTION
ACTIVE VOLUME: 18000 GAL.

200515-AP-15

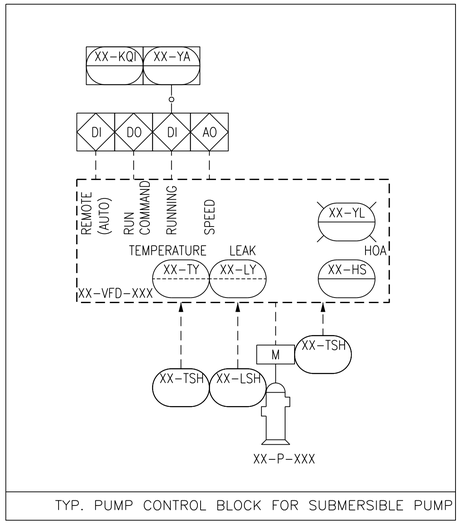

TYP. PUMP CONTROL BLOCK FOR SUBMERSIBLE PUMP

NOTES:
1. ALL DOTTED LINES/EQUIPMENT BY OTHERS.
2. LINE SIZE TO BE SPECIFIED BY THE CLIENT.

REV	DESCRIPTION	ECO	DWN	APVD	DATE	CHKD
3	REVISED AS NOTED		IB	MD	21FEB12	R.P
2	REVISED AS NOTED		IB	MD	24JAN12	R.P
1	REVISED AS NOTED		AK	MD	01AUG11	R.P
0	ISSUED FOR APPROVAL		HR	MD	04MAY11	R.P

TOLERANCES UNLESS NOTED
DECIMALS ANGLES
.X ± ±
.XX ± FRAC
.XXX ± ±
DIMENSIONS IN INCHES
DO NOT SCALE
THIRD ANGLE

		DATE
DRAWN BY	AK	28APR11
CHECKED BY	R.P	28APR11
APPROVED BY	M.D	28APR11
APPROVED BY		DATE

GE
Water & Process Technologies
GLOBAL HEADQUARTERS : TREVOSE, PA USA +1-215-355-3300 WWW.GEWATER.COM

THIS DRAWING, THE DESIGN AND THE PATENTS IT COVERS, IS THE PROPERTY OF GENERAL ELECTRIC COMPANY AND ITS AFFILIATES AND THE INFORMATION CONTAINED HEREIN IS PROPRIETARY INFORMATION WHICH IS NOT TO BE DISCLOSED TO ANYONE WITHOUT PRIOR WRITTEN CONSENT OF SAID COMPANY. THIS DRAWING IS TO BE USED EXCLUSIVELY FOR THE PURPOSES EXPRESSLY AUTHORIZED BY GENERAL ELECTRIC COMPANY AND ITS AFFILIATES THROUGH ITS OFFICERS AND QUALIFIED REPRESENTATIVES AND FOR NO OTHER PURPOSE. NEITHER THIS DRAWING, NOR ANY PORTION THEREOF, SHALL BE REPRODUCED WITHOUT THE PRIOR WRITTEN CONSENT OF SAID COMPANY, AND ANY SUCH REPRODUCTION SHALL BEAR THIS NOTICE.

CLIENT/JOB	EMWD PWFP REJECT RECOVERY FACILITY
TITLE	PIPING & INSTR DIAGRAM EQUALIZATION TANK
FILE	MICROSTATION
MATERIAL	
SIZE	D
DRAWING NO.	200515-AP-02
REV	3
PROJECT	200515
SCALE	N.T.S.
SHEET	1OF1

P/N 1161662-RHP01

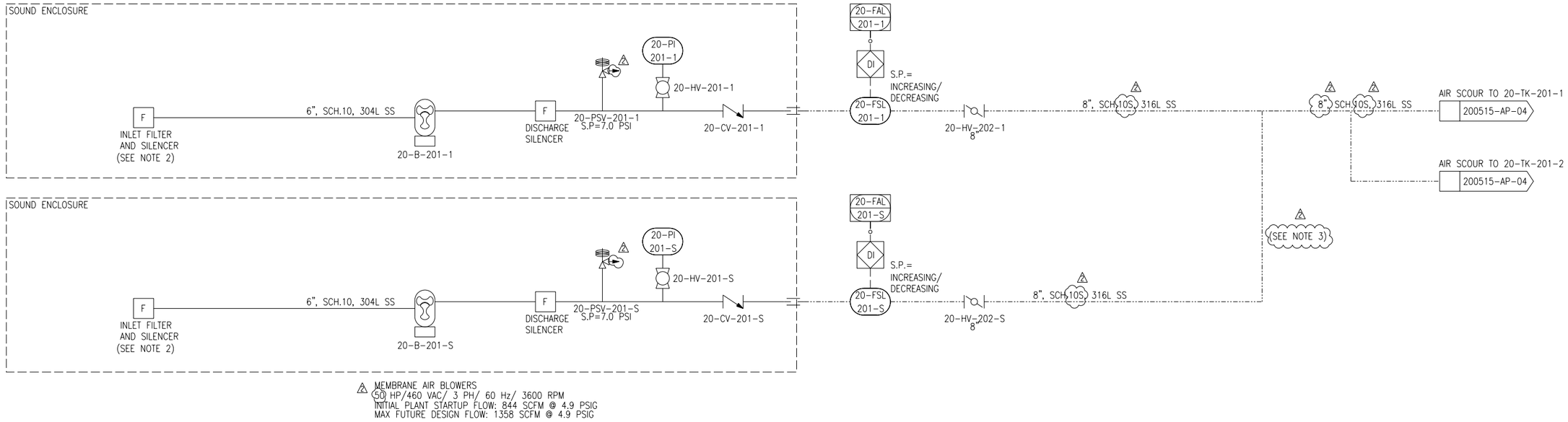

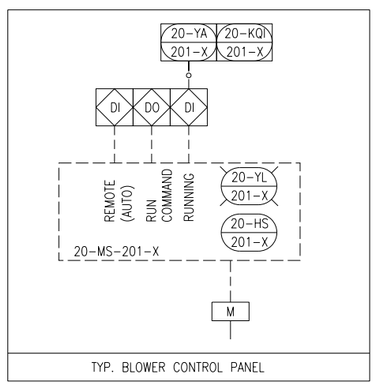

TYP. BLOWER CONTROL PANEL

△2

NOTES:

1. ALL DOTTED LINES/EQUIPMENT BY OTHERS.
2. LOCAL AIR INTAKE FOR BLOWER HAS BEEN ASSUMED. △2
3. INSULATE THE HEADER PIPE TO 8'-0" ELEVATION INDOORS AND OUTDOORS. SO THAT THE HOT SURFACE IS NOT ACCESSIBLE BY OPERATORS.

REV	DESCRIPTION	ECO	DWN	APVD	DATE	CHKD
2	REVISED AS NOTED		AK	MD	01AUG11	RP
1	REVISED AS NOTED		IB	MD	10JUN11	RP
0	ISSUED FOR APPROVAL		HR	MD	04MAY11	RP

TOLERANCES UNLESS NOTED
DECIMALS ANGLES
.X ± ±
.XX ± FRAC
.XXX ± ±
DIMENSIONS IN INCHES
DO NOT SCALE
THIRD ANGLE

DRAWN BY	AK	DATE 28APR11
CHECKED BY	R.P	DATE 28APR11
APPROVED BY	MD	DATE 28APR11
APPROVED BY		DATE

GE
Water & Process Technologies
GLOBAL HEADQUARTERS : TREVOSE, PA USA +1-215-355-3300 WWW.GEWATER.COM
THIS DRAWING, THE DESIGN AND THE PATENTS IT COVERS, IS THE PROPERTY OF GENERAL ELECTRIC COMPANY AND ITS AFFILIATES AND THE INFORMATION CONTAINED HEREIN IS PROPRIETARY INFORMATION WHICH IS NOT TO BE DISCLOSED TO ANYONE WITHOUT PRIOR WRITTEN CONSENT OF SAID COMPANY. THIS DRAWING IS TO BE USED EXCLUSIVELY FOR THE PURPOSES EXPRESSLY AUTHORIZED BY GENERAL ELECTRIC COMPANY AND ITS AFFILIATES THROUGH ITS OFFICERS AND QUALIFIED REPRESENTATIVES AND FOR NO OTHER PURPOSE. NEITHER THIS DRAWING, NOR ANY PORTION THEREOF, SHALL BE REPRODUCED WITHOUT THE PRIOR WRITTEN CONSENT OF SAID COMPANY, AND ANY SUCH REPRODUCTION SHALL BEAR THIS NOTICE.

CLIENT/JOB	EMWD PWFP REJECT RECOVERY FACILITY
TITLE	PIPING & INSTR DIAGRAM P.D BLOWERS & ASSOC. EQUP.
FILE	MICROSTATION
MATERIAL	
SIZE	D
DRAWING NO.	200515-AP-03
REV	2
PROJECT	200515
SCALE	N.T.S.
SHEET	1OF 1

P/N 1161662-RHP01

NOTES:

1. ALL DOTTED LINES/EQUIPMENT BY OTHERS. ----------
2. DRAWING TYPICAL FOR ALL TRAINS.
3. AN OVERFLOW IS REQUIRED FOR EACH TRAIN.
4. A PORTION OF THE AIR HEADER NEEDS TO BE LOCATED ABOVE THE HIGHEST WATER LEVEL IN THE MEMBRANE TANK.
5. 5 PIPE DIAMETERS UPSTREAM, 3 PIPE DIAMETERS DOWNSTREAM, STRAIGHT PIPE RUN RECOMMENDED FOR MAXIMUM ACCURACY.
6. PIPE VENT TO MEMBRANE TANK OR OTHER SAFE LOCATION.
7. VENT VALVES MAY BE REQUIRED BASED ON PLANT LAYOUT AND HYDRAULIC REQUIREMENTS.
8. PORTABLE ACCESS PLATFORM TO BE PROVIDED BY GE.

DO
XX-YY
M
XX-FV
ELECTRIC ACTUATOR OPEN/CLOSE ONE OUTPUT

EJECTOR ASSEMBLY
1/2" OD, HDPE TUBING
1/4"
20-FV 801-1
1/4"
20-PI 801-1
1"-SS040
1"
20-E-801-1 VACUUM EJECTOR (FOR PRIMING)
20-HV-801-1 1"
EXHAUST 1" CLEAR PVC
1"
1/2" OD, HDPE TUBING

DO
AIR SUPPLY ASSEMBLY
S
20-FV 802-1
F
1/4"
20-F-801-1 1/4"
1/4"-SS040
20-HV-802-1 1/4"
1/2"
1/2" OD, TUBING
EJECTOR AIR FROM 90-AC-001-1/2
200515-AP-12

DRAIN OR MEMBRANE TANK
1", SCH.40, 316L SS
1", SCH.40, 316L SS
20-FV-212-1 1"
20-HV-206-1 1"
MIT AIR FROM 90-AC-001-1/2
200515-AP-12
PERMEATE/BACKPULSE TO 20-P-301/FROM PERMEATE/BACKPULSE
200515-AP-05
8", SCH.10S, 316L SS
8", SCH.10S, 316L SS
20-HV-205A-1 8"
20-HV-205B-1 8"
20-HV-205C-1 8"
(SEE NOTE 8)
MEMBRANE TANK OVERFLOW TO CIP NEUTRALIZATION TANK

20-LIC 201-1 | 20-LA 201-1 — HH H L LL
AI
RANGE: 0-120"
20-LIT 201-1
20-HV-204-1
BAFFLE PLATE (BY GE)
CASSETTE
CASSETTE
20-HV-204A-1 4"
20-HV-204B-1 4"
20-HV-204C-1 4"
3", SCH.10S, 316L SS

20-FIC 401-1 | 20-FA 401-1 — HH H L LL
AI
RANGE:
20-FIT 401-1
2", SCH.10S, 316L SS
20-HV-403-1 2"
20-CV-401-1 2"
3", SCH.10S, 316L SS
REJECT TO NEUTRALIZATION TANK 20-TK-801
D 200515-AP-10_2
SEE NOTE 5
20-HV-404-1 3"
M 1.5"
REJECT PUMP
20-P-901-1
70 GPM @ 34' TDH
2 HP, 1800 RPM
460 VAC/ 3 PH/ 60 Hz

FEED FLOW FROM EQUALIZATION TANK
C 200515-AP-02
6", SCH.80, CPVC
M 20-FV 101-1
20-FV-101-1 6"
M 20-FV 102-1
20-FV-102-1 6"
20-FV 103-1
M
20-FV-103-1 2"

AIR SCOUR FROM 20-B-201-N
200515-AP-03
8", SCH.10S, 316L SS
(SEE NOTE 4)
SEE NOTE 4
20-FV-210-1 8"

8", SCH.80, CPVC
M 20-FV 804-1
(SEE NOTE 7)
20-FV-804-1 8"
20-FV 803-1
20-FV-803-1 2"
M 20-FV 805-1
20-FV-805-1 8"
TO CIP WASTE WET WELL
E 200515-AP-10_2
BY GRAVITY

M 20-FV 702-1
20-FV-702-1 6"
20-FV 703-1
M
20-FV-703-1 2"
M 20-FV 701-1
20-FV-701-1 6"
6", SCH.80, CPVC
FROM CIP TANK
200515-AP-10_1
BY 20-P-701-1/S

20-TK-201-1
MEMBRANE TANK
2 ZW-500d CASSETTES OF 60/64 MODULES PER TRAIN
CONCRETE CONSTRUCTION

XX-ZAO | XX-ZAC
DI DI DO
EXHAUST
XX-ZS
S
D
B
A
C
IAS
XX-FV
TYP. PNEUMATIC ACTUATED VALVE CONTROL DETAIL (CYCLIC VALVES)

DO
S
EXHAUST
A
B
C
IAS
XX-FV
F.C.
TYP. SPRING CLOSE VALVE CONTROL DETAIL

20-KQI 801-X | 20-YA 801-X
DI DO DI AO
REMOTE (AUTO)
RUN COMMAND
RUNNING
SPEED
20-YL 801-X
HOA
20-HS 801-X
20-VFD-801-X
20-TSH 801-X
M
TYP. PUMP CONTROL DETAIL

REV	DESCRIPTION	ECO	DWN	APVD	DATE	CHKD
4	REVISED AS NOTED		KVM	MD	16FEB12	R.P
3	REVISED AS NOTED		IB	MD	24JAN12	R.P
2	REVISED AS NOTED		AK	MD	01AUG11	R.P
1	REVISED AS NOTED		HR	MD	03JUN11	R.P
0	ISSUED FOR APPROVAL		HR	MD	04MAY11	R.P

TOLERANCES UNLESS NOTED
DECIMALS ANGLES
.X ± ±
.XX ± FRAC
.XXX ± ±
DIMENSIONS IN INCHES
DO NOT SCALE
THIRD ANGLE

		DATE
DRAWN BY	AK	28APR11
CHECKED BY	R.P	28APR11
APPROVED BY	MD	28APR11
APPROVED BY		DATE

GE Water & Process Technologies
GLOBAL HEADQUARTERS : TREVOSE, PA USA +1-215-355-3300 WWW.GEWATER.COM

THIS DRAWING, THE DESIGN AND THE PATENTS IT COVERS, IS THE PROPERTY OF GENERAL ELECTRIC COMPANY AND ITS AFFILIATES AND THE INFORMATION CONTAINED HEREIN IS PROPRIETARY INFORMATION WHICH IS NOT TO BE DISCLOSED TO ANYONE WITHOUT PRIOR WRITTEN CONSENT OF SAID COMPANY. THIS DRAWING IS TO BE USED EXCLUSIVELY FOR THE PURPOSES EXPRESSLY AUTHORIZED BY GENERAL ELECTRIC COMPANY AND ITS AFFILIATES THROUGH ITS OFFICERS AND QUALIFIED REPRESENTATIVES AND FOR NO OTHER PURPOSE. NEITHER THIS DRAWING, NOR ANY PORTION THEREOF, SHALL BE REPRODUCED WITHOUT THE PRIOR WRITTEN CONSENT OF SAID COMPANY, AND ANY SUCH REPRODUCTION SHALL BEAR THIS NOTICE.

CLIENT/JOB	EMWD PWFP REJECT RECOVERY FACILITY
FILE	MICROSTATION
MATERIAL	
TITLE	PIPING & INSTR DIAGRAM MEMBRANES & ASSOC. EQUIP.
SIZE	D
DRAWING NO.	200515-AP-04
REV	4
PROJECT	200515
SCALE	N.T.S.
SHEET	1OF1

P/N 1161662-RHP01

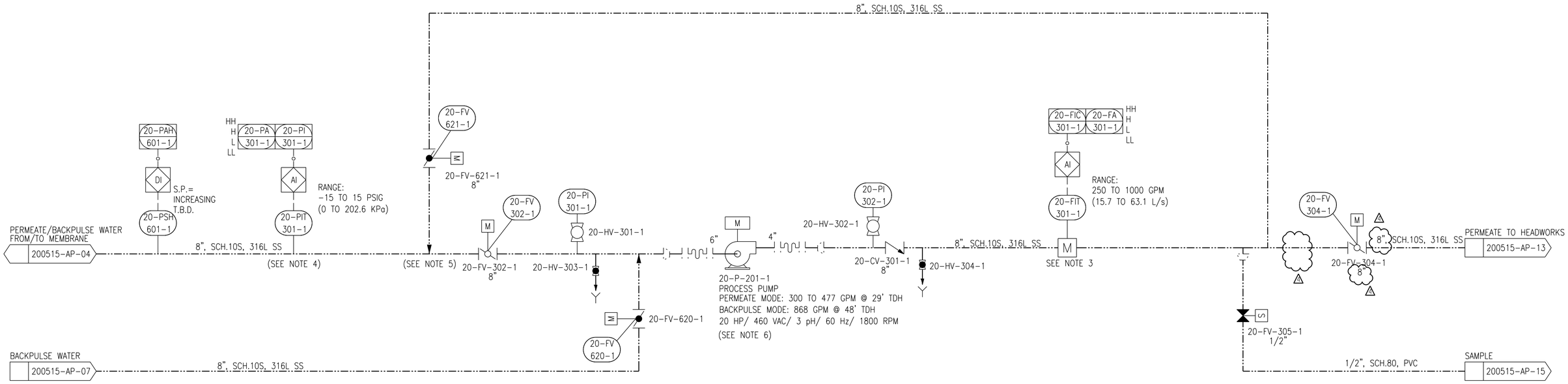

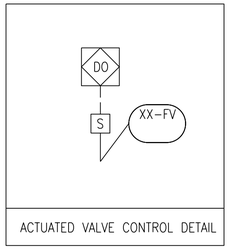

ACTUATED VALVE CONTROL DETAIL

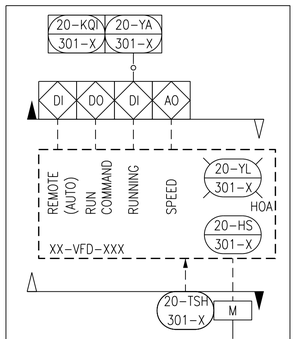

TYP. PUMP CONTROL DETAIL

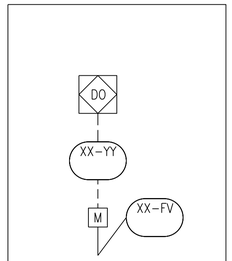

ELECTRIC ACTUATOR OPEN/CLOSE ONE OUTPUT

NOTES:

1. ALL DOTTED LINES/EQUIPMENT BY OTHERS
2. DRAWING TYPICAL FOR ALL TRAINS.
3. 5 PIPE DIAMETERS UPSTREAM, 3 PIPE DIAMETERS DOWNSTREAM, STRAIGHT PIPE RUN RECOMMENDED FOR MAXIMUM ACCURACY.
4. MOUNT IN SIDE OF PIPE.
5. VENT VALVES MAY BE REQUIRED BASED ON PLANT LAYOUT AND HYDRAULIC REQUIREMENTS.
6. TDH FOR BACK PULSE MODE TO BE FINALIZED LATER.

REV	DESCRIPTION	ECO	DWN	APVD	DATE	CHKD
4	REVISED AS NOTED		VI	MD	10FEB12	R.P
3	REVISED AS NOTED		GVK	MD	24JAN12	R.P
2	REVISED AS NOTED		AK	MD	01AUG11	R.P
1	REVISED AS NOTED		IB	MD	13JUN11	R.P
0	ISSUED FOR APPROVAL		HR	MD	04MAY11	R.P

TOLERANCES UNLESS NOTED
DECIMALS .X ± .XX ± .XXX ±
ANGLES ± FRAC ±
DIMENSIONS IN INCHES
DO NOT SCALE
THIRD ANGLE

DRAWN BY AK	DATE 28APR11
CHECKED BY RP	DATE 28APR11
APPROVED BY MD	DATE 28APR11
APPROVED BY	DATE

GE
Water & Process Technologies
GLOBAL HEADQUARTERS : TREVOSE, PA USA +1-215-355-3300 WWW.GEWATER.COM

THIS DRAWING, THE DESIGN AND THE PATENTS IT COVERS, IS THE PROPERTY OF GENERAL ELECTRIC COMPANY AND ITS AFFILIATES AND THE INFORMATION CONTAINED HEREIN IS PROPRIETARY INFORMATION WHICH IS NOT TO BE DISCLOSED TO ANYONE WITHOUT PRIOR WRITTEN CONSENT OF SAID COMPANY. THIS DRAWING IS TO BE USED EXCLUSIVELY FOR THE PURPOSES EXPRESSLY AUTHORIZED BY GENERAL ELECTRIC COMPANY AND ITS AFFILIATES THROUGH ITS OFFICERS AND QUALIFIED REPRESENTATIVES AND FOR NO OTHER PURPOSE. NEITHER THIS DRAWING, NOR ANY PORTION THEREOF, SHALL BE REPRODUCED WITHOUT THE PRIOR WRITTEN CONSENT OF SAID COMPANY, AND ANY SUCH REPRODUCTION SHALL BEAR THIS NOTICE.

CLIENT/JOB	EMWD PWFP REJECT RECOVERY FACILITY
FILE	MICROSTATION
TITLE	PIPING & INSTR DIAGRAM PROCESS PUMP & ASSOC. EQUIP.
MATERIAL	
SIZE	D
DRAWING NO.	200515-AP-05
REV	4
PROJECT	200515
SCALE	N.T.S.
SHEET	1OF 1

P/N 1161662-RHP01

NOTES:

1. ALL DOTTED LINES/EQUIPMENT BY OTHERS. —·—·—·—·—

2. PIPE SPOOL FOR WEDGEWIRE SCREEN MAINTENANCE/ REMOVAL.

3. DEPENDING ON THE PRESSURE IN THE COMMON PERMEATE HEADER AND ITS ELEVATION WITH RESPECT TO THE BACKPULSE TANK, THIS LINE SIZE COULD BE REDUCED.

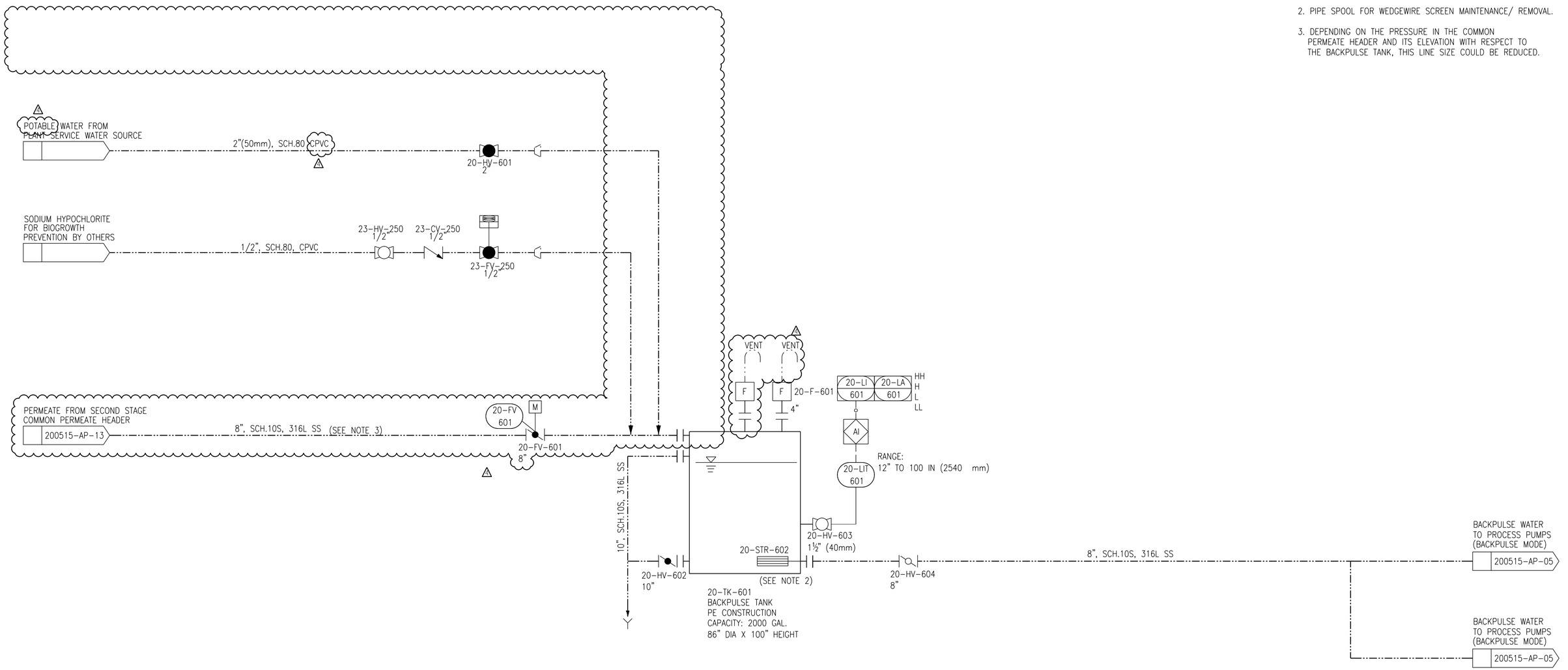

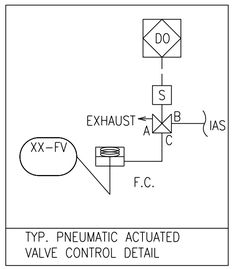

TYP. PNEUMATIC ACTUATED VALVE CONTROL DETAIL

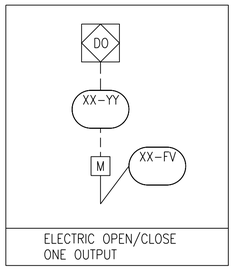

ELECTRIC OPEN/CLOSE ONE OUTPUT

REV	DESCRIPTION	ECO	DWN	APVD	DATE	CHKD
4	REVISED AS NOTED		IB	MD	21FEB12	R.P
3	REVISED AS NOTED		GVK	MD	24JAN12	R.P
2	REVISED AS NOTED		AK	MD	01AUG11	R.P
1	REVISED AS NOTED		HR	MD	03JUN11	R.P
0	ISSUED FOR APPROVAL		HR	MD	04MAY11	R.P

TOLERANCES UNLESS NOTED
DECIMALS ANGLES
.X ± ±
.XX ± FRAC
.XXX ± ±
DIMENSIONS IN INCHES
DO NOT SCALE
THIRD ANGLE

DRAWN BY AK	DATE 28APR11
CHECKED BY RP	DATE 28APR11
APPROVED BY MD	DATE 28APR11
APPROVED BY	DATE

GE Water & Process Technologies
GLOBAL HEADQUARTERS : TREVOSE, PA USA +1-215-355-3300 WWW.GEWATER.COM

THIS DRAWING, THE DESIGN AND THE PATENTS IT COVERS, IS THE PROPERTY OF GENERAL ELECTRIC COMPANY AND ITS AFFILIATES AND THE INFORMATION CONTAINED HEREIN IS PROPRIETARY INFORMATION WHICH IS NOT TO BE DISCLOSED TO ANYONE WITHOUT PRIOR WRITTEN CONSENT OF SAID COMPANY. THIS DRAWING IS TO BE USED EXCLUSIVELY FOR THE PURPOSES EXPRESSLY AUTHORIZED BY GENERAL ELECTRIC COMPANY AND ITS AFFILIATES THROUGH ITS OFFICERS AND QUALIFIED REPRESENTATIVES AND FOR NO OTHER PURPOSE. NEITHER THIS DRAWING, NOR ANY PORTION THEREOF, SHALL BE REPRODUCED WITHOUT THE PRIOR WRITTEN CONSENT OF SAID COMPANY, AND ANY SUCH REPRODUCTION SHALL BEAR THIS NOTICE.

CLIENT/JOB	EMWD PWFP REJECT RECOVERY FACILITY
FILE	MICROSTATION
TITLE	PIPING & INSTR DIAGRAM BACKPULSE TANK & ASSOC. EQUP
MATERIAL	
SIZE	D
DRAWING NO.	200515-AP-07
REV	4
PROJECT	200515
SCALE	N.T.S.
SHEET	1OF 1

P/N 1161662-RHP01

NOTES:

1. ALL DOTTED LINES/EQUIPMENT BY OTHERS
2. 5 PIPE DIAMETERS UPSTREAM, 3 PIPE DIAMETERS DOWNSTREAM, STRAIGHT PIPE RUN RECOMMENDED FOR MAXIMUM ACCURACY.
3. DEPENDING ON THE AVAILABLE PRESSURE IN THE COMMON PERMEATE HEADER AND ITS ELEVATION WITH RESPECT TO CIP TANK, THIS LINE SIZE COULD BE REDUCED.
4. TANK HEATER TO BE SUPPORTED INSIDE AND OUTSIDE TANK BY OTHERS.

PERMEATE FROM SECOND STAGE 200515-AP-13

20-FV-712 8"

8", SCH.10, 316L SS (SEE NOTE 3)

VENT

20-F-701 4"

20-TI 701 / 20-TA 701 HH H L LL — AI — 20-TW 701 — 20-TIT 701

RANGE: 0 TO 122°F (50°C)

20-LSL 701

20-TSH 702 — S.P. 40°C INCREASING

20-TW 702

20-KQI 701 / 20-YA 701 — DI DO DI

REMOTE (AUTO) — HEATER ON COMMAND — HEATER IS ON — 20-YL 701 — 20-TAH 701 — 20-YA 701 — RESET — 20-HS 701 — 20-HMS 701 — XX-JS-XXX

20-FV 713 — M — 6", SCH.80, CPVC — 20-FV-713 6"

RANGE: 0 TO 180 IN (4.6 M)

20-LIC 701 / 20-LA 701 HH H L LL — AI — 20-LIT 701 — 20-HV-725

(SEE NOTE 4)

20-HV-726 10"

20-TSH 701

10", SCH.80, CPVC — TO DRAIN SUMP

20-TK-701
CIP TANK
PE CONSTRUCTION
CAPACITY: 9600 GAL
143" DIA x 173" HEIGHT

20-H-701
CLEANING SOLUTION
ELECTRIC HEATER
130 KW

FROM RRF FACILITIES; BY OTHERS

SODIUM HYPROCHLORITE SOLUTION FOR RECOVERY CLEANS BY OTHERS — 1¼", SCH.80, CPVC — I-2

SODIUM HYPROCHLORITE SOLUTION FOR MAINTENANCE CLEANS BY OTHERS — ¾", SCH.80, CPVC — I-2

CITRIC ACID ACID SOLUTION FOR CLEANS BY OTHERS — 1/2", SCH.80, CPVC — I-2

HYDROCHLORIC ACID SOLUTION FOR CLEANS BY OTHERS — 1/2", SCH.80, CPVC — I-3

CIP SOLUTION TO 20-TK-201-N 200515-AP-04

6", SCH.80, CPVC

20-FIC 701 / 20-FA 701 — AI — 20-FIT 701 — RANGE:

20-PI 701-1 — 20-HV-711-1 1/2" — 20-HV-710-1 6" — 20-HV-712-1 1"

20-P-701-1 — M — 4" — 3"

20-PI 702-1 — 20-HV-713-1 1/2" — 20-CV-701-1 6" — 20-HV-714-1 1"

20-HV-715-1 6"

MAG SEE NOTE 2

23-HV-131 1¼" — 23-CV-130 1¼" — 23-FV-130 1¼"

23-HV-241 ¾" — 23-CV-240 ¾" — 23-FV-240 ¾"

23-HV-511 1/2" — 23-CV-510 1/2" — 23-FV-510 1/2"

F.C.

23-HV-531 1/2" — 23-CV-530 1/2" — 23-FV-530 1/2" — 1/2", SCH.80, CPVC

M — 20-FV 711 — 20-FV-711 6"

20-PI 701-S — 20-HV-711-S 1/2" — 20-HV-710-S 6" — 20-HV-712-S 1"

20-P-701-S — M — 4" — 3"

20-PI 702-S — 20-HV-713-S 1/2" — 20-CV-701-S 6" — 20-HV-714-S 1"

20-HV-715-S 6"

20-P-701-S
CIP PUMPS
444 GPM @ 34 FT
10 HP/ 460 VAC / 3 PH / 60 HZ/ 1800 RPM

SODIUM HYPO DEMAND FOR MC FROM GE TO PLANT PLC

SODIUM HYPO DEMAND FOR RC FROM GE TO PLANT PLC

SODIUM HYPO PUMP FAULT FROM GE TO PLANT PLC

HYDROCHLORIC ACID DEMAND FOR MC FROM GE TO PLANT PLC

HYDROCHLORIC ACID PUMP FAULT FROM GE TO PLANT PLC

CITRIC ACID DEMAND FROM GE TO PLANT PLC

CITRIC ACID PUMP FAULT FROM GE TO PLANT PLC

TYP. SPRING CLOSE VALVE CONTROL DETAIL

DO — S — EXHAUST — A B C — IAS — XX-FV — F.C.

TYP. ELECTRIC OPEN/CLOSE ONE OUTPUT

DO — XX-YY — M — XX-FV

TYP. SOLENOID VALVE CONTROL DETAIL

DO — S — A B — XX-FV

TYP. PUMP CONTROL DETAIL

20-KQI 701-X / 20-YA 701-X — DI DO DI AO

REMOTE (AUTO) — RUN COMMAND — RUNNING — SPEED — 20-YL 701-X — HOA — 20-HS 701-X — 20-VFD-701-X

20-TSH 701-X — M

REV	DESCRIPTION	ECO	DWN	APVD	DATE	CHKD
4	REVISED AS NOTED		IB	MD	21FEB12	R.P
3	REVISED AS NOTED		IB	MD	24JAN12	R.P
2	REVISED AS NOTED		AK	MD	01AUG11	R.P
1	REVISED AS NOTED		HR	MD	03JUN11	R.P
0	ISSUED FOR APPROVAL		HR	MD	04MAY11	R.P

TOLERANCES UNLESS NOTED
DECIMALS .X ± .XX ± .XXX ±
ANGLES ± FRAC ±
DIMENSIONS IN INCHES DO NOT SCALE
THIRD ANGLE

DRAWN BY AK	DATE 28APR11
CHECKED BY RP	DATE 28APR11
APPROVED BY MD	DATE 28APR11
APPROVED BY	DATE

GE Water & Process Technologies
GLOBAL HEADQUARTERS : TREVOSE, PA USA +1-215-355-3300 WWW.GEWATER.COM

THIS DRAWING, THE DESIGN AND THE PATENTS IT COVERS, IS THE PROPERTY OF GENERAL ELECTRIC COMPANY AND ITS AFFILIATES AND THE INFORMATION CONTAINED HEREIN IS PROPRIETARY INFORMATION WHICH IS NOT TO BE DISCLOSED TO ANYONE WITHOUT PRIOR WRITTEN CONSENT OF SAID COMPANY. THIS DRAWING IS TO BE USED EXCLUSIVELY FOR THE PURPOSES EXPRESSLY AUTHORIZED BY GENERAL ELECTRIC COMPANY AND ITS AFFILIATES THROUGH ITS OFFICERS AND QUALIFIED REPRESENTATIVES AND FOR NO OTHER PURPOSE. NEITHER THIS DRAWING, NOR ANY PORTION THEREOF, SHALL BE REPRODUCED WITHOUT THE PRIOR WRITTEN CONSENT OF SAID COMPANY, AND ANY SUCH REPRODUCTION SHALL BEAR THIS NOTICE.

CLIENT/JOB	EMWD PWFP REJECT RECOVERY FACILITY
TITLE	PIPING & INSTR DIAGRAM RECIRC/NEUTRALIZATION SYSTEM
FILE	MICROSTATION
MATERIAL	

SIZE	DRAWING NO.	REV
D	200515-AP-10	4
PROJECT	200515	
SCALE N.T.S.	SHEET 1OF2	

P/N 1161662-RHP01

D 200515-AP-04

20-LAH 802
DI
20-LSH 802
(SEE NOTE 2)

M 20-FV 815
20-FV-815
6"

M 20-FV 816
20-FV-816
6"

20-CV-816
6"

NEUTRALIZED CIP SOLUTION TO SEWER/WASTE

6", SCH.80, CPVC

I-3

3", SCH.80, CPVC
200515-AP-04

20-FV 813
M
8", SCH.80, CPVC
20-FV-813
8"

20-TK-802
NEUTRALIZATION TANK
CONCRETE CONSTRUCTION
20' L x 8' W x 8' SWD
CAPACITY: 9600 GAL

FOR FUTURE BISULFITE (FOR DE-CHLORINATION)

FROM EXISTING PWFP PLANT; BY OTHERS

SODIUM HYDROXIDE FOR NEUTRALIZATION BY OTHERS

23-CV-610
1/2"

23-FV-610
1/2"

23-HV-611
1/2"

1/2", SCH.80, CPVC

CIP SOLUTION RETURN
GRAVITY FLOW FROM MEMBRANE TANKS 20-TK-201-N

E 200515-AP-04

6", SCH.80, CPVC

20-LALL 801
20-LAH 801
DI
DI
RANGE:
RANGE:
20-LSLL 801
20-LSH 801

20-FIC 801
20-FA 801
AI
RANGE:
20-FIT 801
M
MAG
SEE NOTE 3

20-HV-813
6"

6", SCH.80, CPVC

S
B
A
20-FV-814

4", SCH.80, CPVC
4", SCH.80, CPVC

20-HV-820
20-HV-821
20-HCV-820
20-HCV-821

CT
AE 801
AIT 801
RESIDUAL CHLORINE ANALYZER RANGE: 0 TO 200 ppm

AE 802
AIT 802
pH
RANGE: 0 TO 14

AI
AI

HH
H
L
LL
AA 801
AI 801

HH
H
L
LL
AA 802
AI 802

4" 20-CV-801-S
4" 20-CV-801-1
3"
3"

20-P-801-1/S
CIP WASTE PUMPS
444 GPM @ 35' TDH
10 HP, 1800 RPM
460 VAC/ 3 PH/ 60 Hz

20-TK-801
CIP WASTE WET WELL
CONCRETE CONSTRUCTION
CAPACITY: TBD

20-KQI 801-X
20-YA 801-X
DI DO DI AO
REMOTE (AUTO) RUN COMMAND
RUNNING
SPEED
20-YL 801-X
HOAI
20-HS 801-X
20-VFD-801-X
20-TSH 801-X
M

TYP. PUMP CONTROL DETAIL

DO
XX-YY
M
XX-FV

TYP. ELECTRIC OPEN/CLOSE ONE OUTPUT

DO
XX-FV
S
A
B

TYP. SOLENOID VALVE CONTROL DETAIL

DO
S
EXHAUST
A
B
C
IAS
XX-FV
F.C.

TYP. SPRING CLOSE VALVE CONTROL DETAIL

SODIUM HYDROXIDE DEMAND FOR MC FROM GE TO PLANT PLC

SODIUM HYDROXIDE DEMAND FOR RC FROM GE TO PLANT PLC

SODIUM HYDROXIDE PUMP FAULT FROM GE TO PLANT PLC

NOTES:

1. ALL DOTTED LINES/EQUIPMENT BY OTHERS
2. PROVIDE AIR GAP.
3. 5 PIPE DIAMETERS UPSTREAM, 3 PIPE DIAMETERS DOWNSTREAM, STRAIGHT PIPE RUN RECOMMENDED FOR MAXIMUM ACCURACY.
4. DEPENDING ON THE AVAILABLE PRESSURE IN THE COMMON PERMEATE HEADER AND ITS ELEVATION WITH RESPECT TO CIP TANK, THIS LINE SIZE COULD BE REDUCED.
5. EYEWASH SHOWERS BY OTHERS.

REV	DESCRIPTION	ECO	DWN	APVD	DATE	CHKD
1	REVISED AS NOTED		IB	MD	21FEB12	R.P
0	REVISED AS NOTED		IB	MD	24JAN12	R.P

TOLERANCES UNLESS NOTED
DECIMALS .X ± .XX ± .XXX ±
ANGLES ±
FRAC ±
DIMENSIONS IN INCHES
DO NOT SCALE
THIRD ANGLE

		DATE
DRAWN BY	GVK	17JAN12
CHECKED BY	R.P	17JAN12
APPROVED BY	MD	17JAN12
APPROVED BY		DATE

GE
Water & Process Technologies
GLOBAL HEADQUARTERS : TREVOSE, PA USA +1-215-355-3300 WWW.GEWATER.COM

THIS DRAWING, THE DESIGN AND THE PATENTS IT COVERS, IS THE PROPERTY OF GENERAL ELECTRIC COMPANY AND ITS AFFILIATES AND THE INFORMATION CONTAINED HEREIN IS PROPRIETARY INFORMATION WHICH IS NOT TO BE DISCLOSED TO ANYONE WITHOUT PRIOR WRITTEN CONSENT OF SAID COMPANY. THIS DRAWING IS TO BE USED EXCLUSIVELY FOR THE PURPOSES EXPRESSLY AUTHORIZED BY GENERAL ELECTRIC COMPANY AND ITS AFFILIATES THROUGH ITS OFFICERS AND QUALIFIED REPRESENTATIVES AND FOR NO OTHER PURPOSE. NEITHER THIS DRAWING, NOR ANY PORTION THEREOF, SHALL BE REPRODUCED WITHOUT THE PRIOR WRITTEN CONSENT OF SAID COMPANY, AND ANY SUCH REPRODUCTION SHALL BEAR THIS NOTICE.

CLIENT/JOB	EMWD PWFP REJECT RECOVERY FACILITY
TITLE	PIPING & INSTRUMENT DIAGRAM NEUTRALIZATION SYSTEM
FILE	MICROSTATION
MATERIAL	

SIZE	DRAWING NO.	REV
D	200515-AP-10	1
PROJECT	200515	
SCALE	NONE	SHEET 2 OF 2

P/N 1161662-RHP01

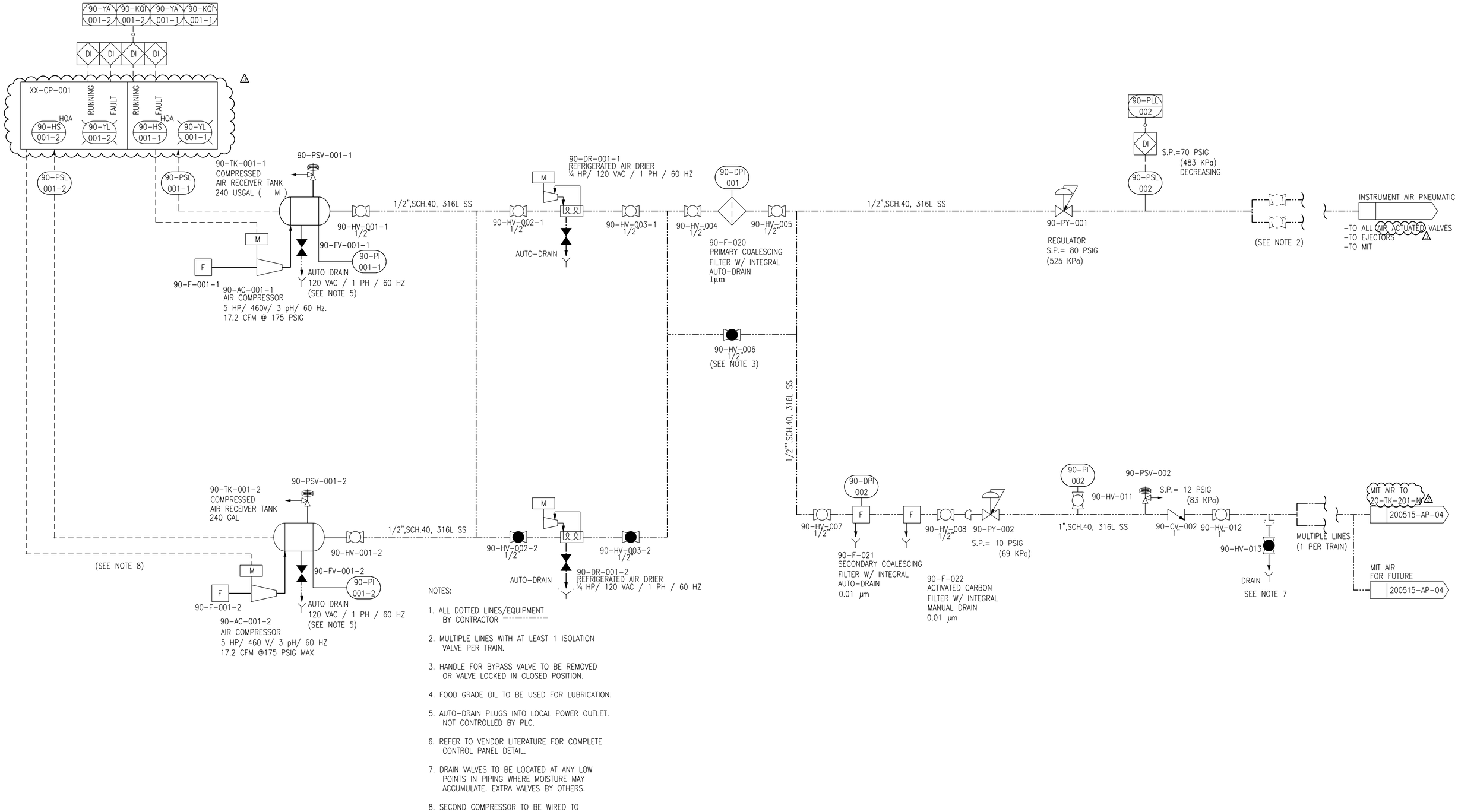

NOTES:

1. ALL DOTTED LINES/EQUIPMENT BY CONTRACTOR
2. MULTIPLE LINES WITH AT LEAST 1 ISOLATION VALVE PER TRAIN.
3. HANDLE FOR BYPASS VALVE TO BE REMOVED OR VALVE LOCKED IN CLOSED POSITION.
4. FOOD GRADE OIL TO BE USED FOR LUBRICATION.
5. AUTO-DRAIN PLUGS INTO LOCAL POWER OUTLET. NOT CONTROLLED BY PLC.
6. REFER TO VENDOR LITERATURE FOR COMPLETE CONTROL PANEL DETAIL.
7. DRAIN VALVES TO BE LOCATED AT ANY LOW POINTS IN PIPING WHERE MOISTURE MAY ACCUMULATE. EXTRA VALVES BY OTHERS.
8. SECOND COMPRESSOR TO BE WIRED TO THE DUPLEX CONTROL PANEL BY THE CONTRACTOR.

REV	DESCRIPTION	ECO	DWN	APVD	DATE	CHKD
3	REVISED AS NOTED		GVK	MD	24JAN12	R.P
2	REVISED AS NOTED		AK	MD	01AUG11	R.P
1	REVISED AS NOTED		HR	MD	03JUN11	R.P
0	ISSUED FOR APPROVAL		HR	MD	04MAY11	R.P

TOLERANCES UNLESS NOTED
DECIMALS .X ± .XX ± .XXX ±
ANGLES ± FRAC ±
DIMENSIONS IN INCHES
DO NOT SCALE
THIRD ANGLE

DRAWN BY AK	DATE 28APR11
CHECKED BY RP	DATE 10JUN11
APPROVED BY MD	DATE 28APR11
APPROVED BY	DATE

GE Water & Process Technologies
GLOBAL HEADQUARTERS : TREVOSE, PA USA +1-215-355-3300 WWW.GEWATER.COM

THIS DRAWING, THE DESIGN AND THE PATENTS IT COVERS, IS THE PROPERTY OF GENERAL ELECTRIC COMPANY AND ITS AFFILIATES AND THE INFORMATION CONTAINED HEREIN IS PROPRIETARY INFORMATION WHICH IS NOT TO BE DISCLOSED TO ANYONE WITHOUT PRIOR WRITTEN CONSENT OF SAID COMPANY. THIS DRAWING IS TO BE USED EXCLUSIVELY FOR THE PURPOSES EXPRESSLY AUTHORIZED BY GENERAL ELECTRIC COMPANY AND ITS AFFILIATES THROUGH ITS OFFICERS AND QUALIFIED REPRESENTATIVES AND FOR NO OTHER PURPOSE. NEITHER THIS DRAWING, NOR ANY PORTION THEREOF, SHALL BE REPRODUCED WITHOUT THE PRIOR WRITTEN CONSENT OF SAID COMPANY, AND ANY SUCH REPRODUCTION SHALL BEAR THIS NOTICE.

CLIENT/JOB	EMWD PWFP REJECT RECOVERY FACILITY
FILE	MICROSTATION
TITLE	PIPING & INSTR DIAGRAM AIR SYS FOR PDT EQ. & VALVES
MATERIAL	
SIZE	D
DRAWING NO.	200515-AP-12
REV	3
PROJECT	200515
SCALE	N.T.S.
SHEET	1OF1

P/N 1161662-RHP01

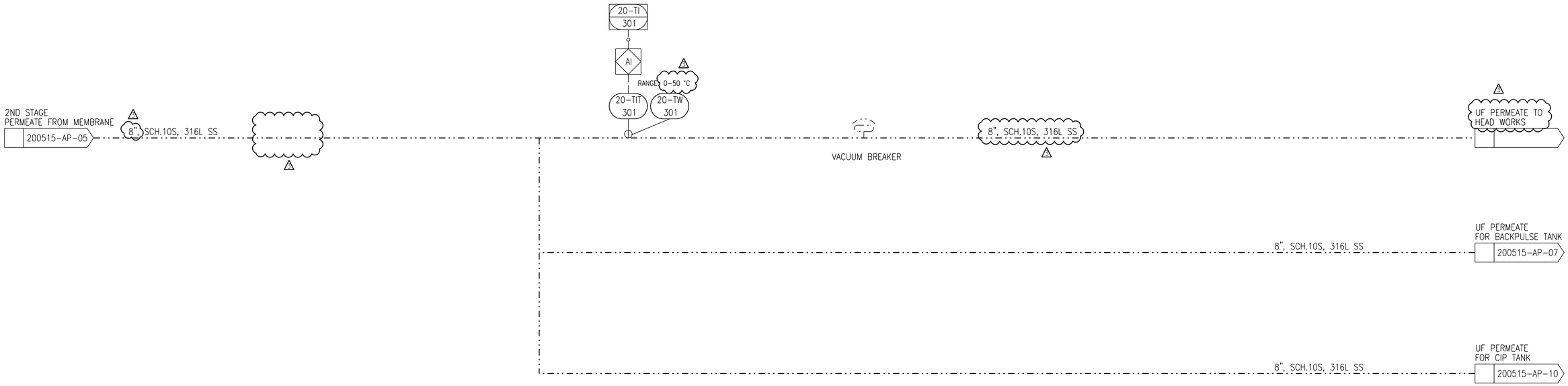

NOTE:

1. ALL DOTTED LINES/EQUIPMENT BY OTHERS

REV	DESCRIPTION	ECO	DWN	APVD	DATE	CHKD
3	REVISED AS NOTED		VI	MD	10FEB12	R.P
2	REVISED AS NOTED		AK	MD	01AUG11	RP
1	REVISED AS NOTED		IB	MD	13JUN11	RP
0	ISSUED FOR APPROVAL		HR	MD	28APR11	RP

TOLERANCES UNLESS NOTED
DECIMALS ANGLES
.X ± ±
.XX ± FRAC
.XXX ± ±
DIMENSIONS IN INCHES
DO NOT SCALE
THIRD ANGLE

DRAWN BY AK	DATE 28APR11
CHECKED BY R.P	DATE 28APR11
APPROVED BY MD	DATE 28APR11
APPROVED BY	DATE

GE
Water & Process Technologies
GLOBAL HEADQUARTERS : TREVOSE, PA USA +1-215-355-3300 WWW.GEWATER.COM
THIS DRAWING, THE DESIGN AND THE PATENTS IT COVERS, IS THE PROPERTY OF GENERAL ELECTRIC COMPANY AND ITS AFFILIATES AND THE INFORMATION CONTAINED HEREIN IS PROPRIETARY INFORMATION WHICH IS NOT TO BE DISCLOSED TO ANYONE WITHOUT PRIOR WRITTEN CONSENT OF SAID COMPANY. THIS DRAWING IS TO BE USED EXCLUSIVELY FOR THE PURPOSES EXPRESSLY AUTHORIZED BY GENERAL ELECTRIC COMPANY AND ITS AFFILIATES THROUGH ITS OFFICERS AND QUALIFIED REPRESENTATIVES AND FOR NO OTHER PURPOSE. NEITHER THIS DRAWING, NOR ANY PORTION THEREOF, SHALL BE REPRODUCED WITHOUT THE PRIOR WRITTEN CONSENT OF SAID COMPANY, AND ANY SUCH REPRODUCTION SHALL BEAR THIS NOTICE.

CLIENT/JOB	EMWD PWFP REJECT RECOVERY FACILITY
FILE	MICROSTATION
TITLE	PIPING & INSTR DIAGRAM PERMEATE STORAGE TANK
MATERIAL	
SIZE	D
DRAWING NO.	200515-AP-13
REV	3
PROJECT	200515
SCALE	N.T.S.
SHEET	1OF1

P/N 1161662-RHP01

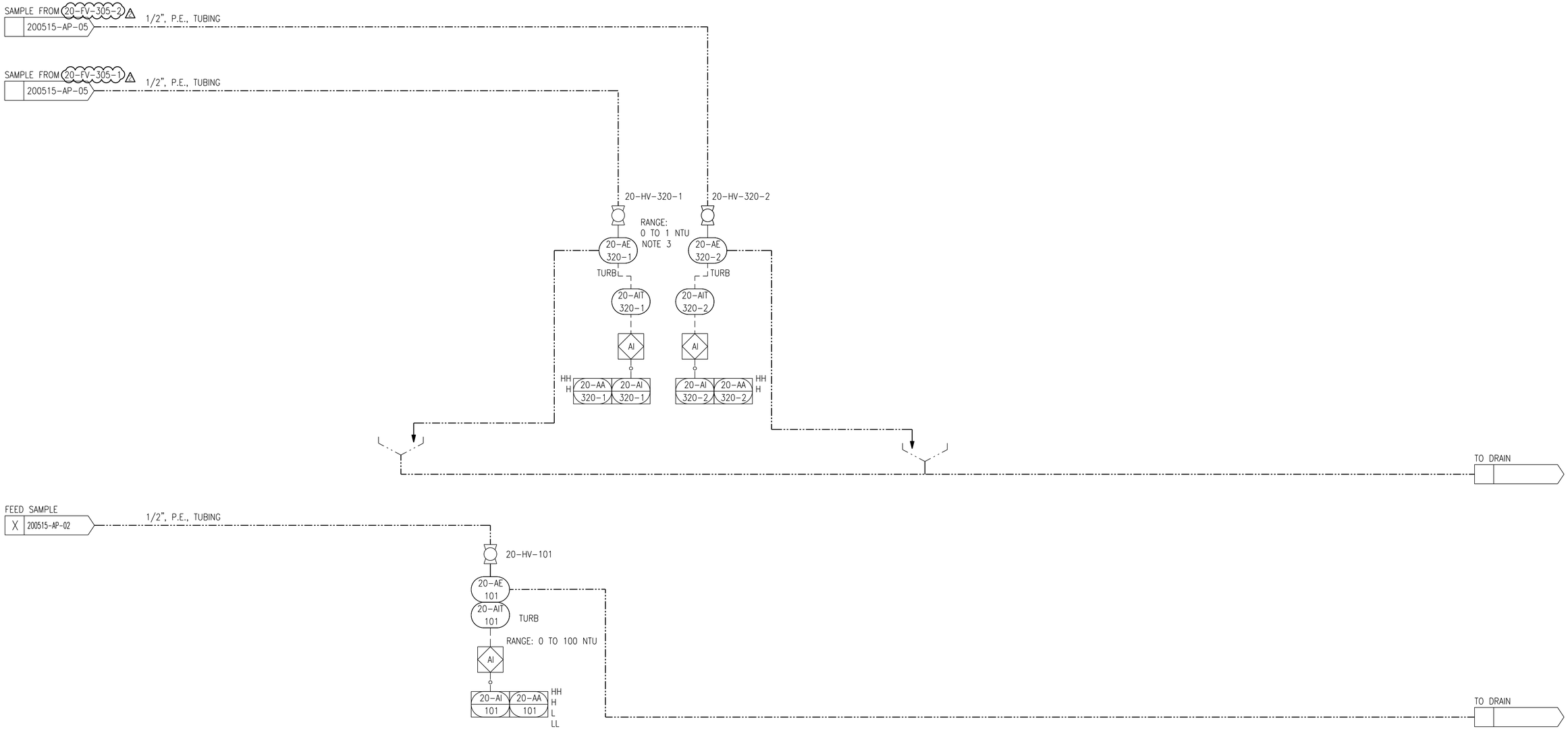

NOTES:

1. ALL DOTTED LINES/EQUIPMENT BY OTHERS ----·----·----
2. DRAWING TYPICAL FOR ALL TRAINS.
3. ONE DIGITAL CONTROLLER SERVICES TWO TURBIDITY SENSORS. IF AN ODD NO. OF TRAINS ARE SUPPLIED, THE LAST TRAIN WILL HAVE ONE SENSOR AND ONE CONTROLLER.

REV.	DESCRIPTION	ECO	DWN	APVD	DATE	CHKD
2	REVISED AS NOTED		GVK	MD	24JAN12	R.P
1	REVISED AS NOTED		AK	MD	01AUG11	R.P
0	ISSUED FOR APPROVAL		AK	MD	29APR11	R.P

TOLERANCES UNLESS NOTED
DECIMALS: .X ± .XX ± .XXX ±
ANGLES ±
FRAC ±
DIMENSIONS IN INCHES
DO NOT SCALE
THIRD ANGLE

DRAWN BY	AK	DATE 28APR11
CHECKED BY	R.P	DATE 28APR11
APPROVED BY	MD	DATE 28APR11
APPROVED BY		DATE

GE Water & Process Technologies
GLOBAL HEADQUARTERS : TREVOSE, PA USA +1-215-355-3300 WWW.GEWATER.COM

THIS DRAWING, THE DESIGN AND THE PATENTS IT COVERS, IS THE PROPERTY OF GENERAL ELECTRIC COMPANY AND ITS AFFILIATES AND THE INFORMATION CONTAINED HEREIN IS PROPRIETARY INFORMATION WHICH IS NOT TO BE DISCLOSED TO ANYONE WITHOUT PRIOR WRITTEN CONSENT OF SAID COMPANY. THIS DRAWING IS TO BE USED EXCLUSIVELY FOR THE PURPOSES EXPRESSLY AUTHORIZED BY GENERAL ELECTRIC COMPANY AND ITS AFFILIATES THROUGH ITS OFFICERS AND QUALIFIED REPRESENTATIVES AND FOR NO OTHER PURPOSE. NEITHER THIS DRAWING, NOR ANY PORTION THEREOF, SHALL BE REPRODUCED WITHOUT THE PRIOR WRITTEN CONSENT OF SAID COMPANY, AND ANY SUCH REPRODUCTION SHALL BEAR THIS NOTICE.

CLIENT/JOB	EMWD PWFP REJECT RECOVERY FACILITY
FILE	MICROSTATION
TITLE	PIPING & INSTR DIAGRAM PARTICLE COUNTER & TURBIDIMETER
MATERIAL	
SIZE	D
DRAWING NO.	200515-AP-15
REV	2
PROJECT	200515
SCALE	N.T.S.
SHEET	1 OF 1

P/N 1161662-RHP01

Appendix B – Contract Documentation

- ❑ *Supplemental Special Requirements*, with modifications
- ❑ *Section 11400 – Membrane System*, with modifications

[Page Left Intentionally Blank]

EASTERN MUNICIPAL WATER DISTRICT

SPECIFICATION NO. 1169W
PWFP REJECT RECOVERY FACILITY
GE Pre-Negotiated Membrane Supply Proposal (# 217529)
SECTION SSR
SUPPLEMENTAL SPECIAL REQUIREMENTS (SSR)

SCOPE: These special conditions amend or supplement the GE Pre-Negotiated Membrane Supply Proposal (#217529) Documents as indicated herein. All provisions which are not so amended or supplemented remain in full force and effect.

SSR-1. Intent

The intent of this document is to serve as a pre-negotiated proposal from GE Water (GE) to supply the membrane system for the Perris Water Filtration Plant Reject Recovery Project.
After the construction contract is awarded, the construction contractor will issue a PO for the GE membrane supply proposal, and the resulting contract will be between GE and the construction contractor.

All parties shall recognize the intent of these documents (including the Supplementary Special Requirements and Section 11400) is to provide a pre-negotiated membrane equipment proposal that will be executed between the MFSS and the construction contractor. The documents are included so that all parties are aware of design and contractual requirements.

The order of precedence of the documents within the proposal is as follows: 1) Appendix B - Supplementary Special Conditions, 2) Appendix B - Section 11400, 3) Balance of GE proposal No 217529.

SSR-2. Definitions

i. The word Owner or District shall be synonymous with Eastern Municipal Water District.

ii. The word ENGINEER or CHIEF ENGINEER shall mean the individual, partnership, corporation, joint-venture, or other legal entity named as such by the District. The Engineer of record named for these Contract Documents is MWH Americas, Inc.

iii. The words MICROFILTRATION/ULTRAFILTRATION SYSTEM SUPPLIER or MFSS or Seller or Supplier shall mean the firm providing the pre-negotiated proposal to the Contractor for the furnishing of articles or materials in accordance with these specifications, and the legal representatives of said party, or the agent appointed to act for said party in the performance of the contract. Said party is referred to throughout the contract documents as if of the singular number and the masculine gender. The MFSS named for these contract documents is Zenon Environmental Corporation d/b/a GE Water & Process Technologies (GE or GE Water).

iv. The word CONTRACTOR or CONSTRUCTION CONTRACTOR shall mean the general engineering construction contractor firm, duly licensed by the State of California, entering into a contract with the District for the General Construction Work of providing and installing the MF/UF membrane system and appurtenances. The CONSTRUCTION CONTRACTOR will issue a PO to the MFSS for the pre-negotiated MFSS proposal.

v. The phrase ARTICLES OR MATERIALS shall be construed to embrace machinery, manufactured articles, materials of construction, whether fabricated or otherwise, equipment, supplies, and any other classes of commodities to be furnished in connection with the contract, except where a more limited meaning is indicated by the context.

SSR-3. Indemnification.

Supplier shall indemnify and hold harmless District, and its officers, directors, shareholders, partners, employees, agents, consultants, contractors and subcontractors from any and all claims, costs, losses, and demands or judgments for damages for claims (including but not limited to fees and charges of engineers, architects, attorneys and other professionals and all court or arbitration or other dispute resolution costs) caused by, arising out of or relating to a negligent act or omission, reckless, or willful misconduct, or the breach of any obligation under this agreement by GE Water, or its officers, directors, shareholders, partners, employees, agents, consultants, contractors or subcontractors, or anyone for whom GE Water is responsible, provided that any such claim, cost, loss, or damage: Is caused in whole or in part by any negligent act or omission of GE Water or any individual or entity directly or indirectly employed to furnish any of the work or special services or anyone for whose acts GE Water may be liable and is attributable to bodily injury, sickness, disease, or death, or to injury to or destruction of tangible property of third parties (other than the Goods or Special Services themselves) but only to the extent such damages are attributable to GE Water.

SSR-4. Limitation of Liability.

Supplier's Limit of Liability

Notwithstanding anything else contained in this Agreement, to the maximum extent permitted by law, and regardless of whether a claim is based in contract (including warranty or indemnity), extracontractual liability, tort (including negligence or strict liability), statute, equity or any other legal theory:

(a) THE TOTAL LIABILITY OF THE SUPPLIER FOR ALL CLAIMS ARISING OUT OF OR RELATING TO THE PERFORMANCE OR BREACH OF THIS AGREEMENT OR USE OF ANY EQUIPMENT OR SERVICES SHALL NOT EXCEED THE TOTAL PRICE PAID BY THE CONTRACTOR UNDER THIS AGREEMENT OR (IN THE CASE OF AN AGREEMENT FOR SERVICES WITH A TERM OF MORE THAN ONE YEAR) THE ANNUAL PRICE PAYABLE BY THE CONTRACTOR UNDER THIS AGREEMENT;

(b) IN NO EVENT SHALL SUPPLIER BE LIABLE FOR ANY LOSS OF PROFIT

OR REVENUES, LOSS OF PRODUCTION, LOSS OF USE OF EQUIPMENT OR SERVICES OR ANY ASSOCIATED EQUIPMENT, INTERRUPTION OF BUSINESS, COST OF CAPITAL, COST OF REPLACEMENT WATER OR POWER, DOWNTIME COSTS, INCREASED OPERATING COSTS, CLAIMS FOR SUCH DAMAGES, OR FOR ANY SPECIAL, CONSEQUENTIAL INCIDENTAL, INDIRECT PUNITIVE OR EXEMPLARY DAMAGES;

(c) ALL LIABILITY ON THE PART OF SUPPLIER SHALL TERMINATE AT THE EXPIRY OF THE APPLICABLE WARRANTY PERIOD.

For the purposes of this article, "Supplier" shall mean Supplier, its affiliates, subcontractors and suppliers of any tier, and their respective agents and employees, individually or collectively. If Construction Contractor is supplying Supplier's Equipment or Services to a third party, Contractor shall require the third party to agree to be bound by this clause. If Construction Contractor does not obtain this agreement for Supplier's benefit for any reason, he shall indemnify and hold Supplier harmless from all liability arising out of claims made by the third party in excess of the limitations and exclusion of this clause.

SSR-5. Project Completion Schedule and Liquidated Damages.

TIME IS OF THE ESSENCE with regard to the performance of the WORK, specifically including, but not limited to, any intermediate milestones and phase submittals. The contract period shall commence fifteen (15) calendar days from the date of the Notice of Award. This project has four (4) completion milestones as noted in the following table.

The MFSS's obligation to pay liquidated damages pursuant to this Article SSR-5 for all delays attributable to MFSS, including failure to meet Guaranteed Operation and Maintenance Costs shall be limited to an amount equal to twenty percent (20%) of the MFSS's contract price. The Contractor shall have the right to deduct the liquidated damages from any money in its hands, otherwise due, or to become due, to SUPPLIER, or to initiate applicable dispute resolution procedures and recover liquidated damages for nonperformance of this Contract within the time stipulated. The liquidated damages set forth in this Article SSR-5 shall constitute sole and exclusive remedy for delay by Supplier in achieving completion of the Work within the time specified in this Article SSR-5. Supplier's obligation to pay liquidated damages pursuant to this Article SSR-5, including Supplier's failure to meet performance guarantee criteria, shall be limited to an amount equal to twenty percent (20%) of the price for the Work as set forth in Supplier's contract.

The final completion dates, excluding the delivery of design documents, shall be as agreed upon between the Construction Contractor and MFSS upon Notice of Award for Construction Contract assignment of Contract. The MFSS accepts and acknowledges the following tentative schedule as acceptable for agreement with the Construction Contractor:

Item	Early Start	Late Start

Award of Construction Contract	Q3, 2012	Q4, 2012
Factory Acceptance Testing/Delivery	Q4, 2012	Q1, 2013
Commissioning	Q1, 2013	Q2, 2013
Performance Warranty Test	Q2, 2014	Q3, 2014

Additional schedule requirements are provided in Section SSR-11, Delivery Schedule.

Completion Milestone	Completion Date	Liquidated Damages ($/calendar day)
Final Shop Drawing Submittal	60 days from NTP for Construction Contractor [1]	$1,500
Factory Acceptance Testing and Delivery	TBD based on Agreement with General Contractor	$1,500
Performance Warranty Testing		$1,500

Notes:

1. Liquidated damages assessed from comment return date unless and until submittal is accepted and marked "No Exceptions Taken" or "Make Corrections Noted". Conformed shop drawings shall be provided per specification.

In case of failure on the part of the MFSS to deliver the product and/or service within the time specified, or within such additional time as may be granted by the formal action of the Construction Contractor, the MFSS shall pay liquidated damages to the Construction Contractor in the amount specified in the above table.

Any liquidated damages shall be considered as reimbursement, in part, to the Construction Contractor for the loss of the use of the items agreed to in this document. The liquidated damages shall be deducted from the next invoice from the MFSS or billed to the MFSS directly.

Liquidated damages may also be applied to compensate the Construction Contractor for undue delays in the completion of punch list items, site clean-up, demobilization, and miscellaneous contract obligations after a notice of Substantial Completion has been filed. The cost for administration, inspection, mileage, and other similar items would be extremely difficult to determine. For that reason, additional liquidated damages, known as Administrative Delay Liquidated Damages shall be imposed in the amount of **$100** per day, effective **30** days after the Substantial Completion date is filed or the Revised Completion date is reached, whichever is later. Charges will be assessed until the Final Completion date is issued by the Inspector.

SSR-6. Standard of Performance.

MFSS shall perform the WORK in a manner consistent with that degree of care and skill ordinarily exercised by members of the same profession currently practicing under similar circumstances in the region where the project ("Project") is located. MFSS acknowledges that the MFSS design services provided were for the development of the plans and specifications of the District's new Reject Recovery Facility which (i) plans and specifications were independently

designed by Engineer based, in part, upon the MFSS design contributionand (ii) the equipment and materials to be supplied by the MFSS to the extent incorporated in the design and used by Engineer for the Project. Engineer reasonably relied upon materials, specifications, and performance criteria developed and delivered as part of the MFSS's design, in Engineer's specifications which are part of this proposal (GE Proposal #217529) as it relates to the design and construction of the new Reject Recovery Facility.

The initial design drawings submitted by the MFSS have been used as a basis for the contract documents. The MFSS shall submit construction submittals per the requirements in the contract documents.

SSR-7. Force Majeure.

MFSS shall be excused from performance hereunder during the time and to the extent that it is prevented from obtaining, delivering, or performing in the customary manner, by acts of God, fire, war, loss or shortage of transportation facilities, lockout or commandeering of raw materials, products, plants or facilities by the government or other cause beyond the reasonable control of the MFSS. MFSS shall provide satisfactory evidence that non performance is due to cause other than fault or negligence on its part.

SSR-8. Design Drawings and Calculations.

MFSS shall employ an Engineer licensed in the State of California to sign and seal all drawings and design calculations, including seismic and anchorage drawings and design calculations.

SSR-9. Control System.

MFSS shall match District standards for control system symbols, colors and tagging.

SSR-10. Shipping Terms: F.O.B Destination.

MFSS prices are based on freight on board (F.O.B.) Destination and MFSS shall hold title to the equipment until such time as they are delivered to, and signed for by an authorized Contractor representative.

The MFSS shall deliver all equipment and materials F.O.B. to the project site (located at 19750 Old Evans Road near Rider Street) as defined in the delivery schedule specified in this SSR-11. The Construction Contractor shall prepare a listing of the materials or equipment received and sign for the receipt of all items. A detailed packing slip or delivery ticket shall be provided by the MFSS with any equipment to be delivered in conjunction with this project. The packing slip shall be attached to the shipping carton(s) that contain the items and shall be made available to the Contractor's authorized representative during delivery. The packing slip or delivery ticket shall include, at a minimum, the following information: purchase order number; date of order; a complete listing of items being delivered; and back-order quantities and estimated delivery of back-orders if applicable. The Construction Contractor shall take immediate custody of all materials and equipment received in good condition and shall thereafter be solely responsible for any damage or theft until final acceptance of the work. It shall be the Construction

Contractor's responsibility alone to obtain settlement of damages caused by others. The Construction Contractor shall replace all materials and equipment that are lost or damaged while in the custody of the Construction Contractor.

The Construction Contractor shall be responsible for the equipment once truck unloading has commenced at the job site.

The MF/UF System is subject to inspection and acceptance by Engineer and District staff. The Construction Contractor shall open all crates upon receipt for inspection. The Construction Contractor and a MFSS representative shall inspect for defects, damages and shortages all the equipment upon the Construction Contractor taking possession, custody or control of the same. Any non-conformance in the equipment shall be immediately reported to the MFSS. Any item rejected by Construction Contractor for shipping defect or non-compliance with the contract resultant from this solicitation, shall be held, transported, or stored at the sole expense of the MFSS. The MFSS shall replace rejected items within thirty (30) days of written notification.

The Construction Contractor shall handle all equipment and materials carefully to prevent damage or loss, shall store them in an orderly manner, shall keep adequate and convenient records of their location, and shall keep a continuously accurate inventory record

SSR-11. Delivery Schedule.

The MFSS shall certify that delivery of the MF/UF membrane system conforms to the tentative schedule, and other requirements, as defined in, Paragraph SSR-5. All deliveries shall be made in accordance with good commercial practice and all required delivery timeframes shall be adhered to by the MFSS(s); except in such cases where the delivery will be delayed due to acts of nature, strikes, or other causes beyond the control of the MFSS. In these cases, the MFSS shall notify the Construction Contractor of any delays in advance of the original delivery date so that a revised delivery schedule can be appropriately negotiated.

After review and acceptance of technical manuals for MF/UF Membrane System equipment by District or its designee, the final technical manuals shall be delivered to the project site at least thirty (30) days prior to operator training and clean water testing.

Delivery, handling, storage, and protection instructions for equipment shall be furnished upon delivery of the equipment. The Construction Contractor shall adhere to the delivery, handling, storage, and protection instructions supplied by the MFSS for the MF/UF Membrane System equipment and materials.

SSR-12. Back Order Delays in Delivery Shall Not be Allowed.

The Construction Contractor shall not allow any late deliveries attributed to product back order situations under this contract. Accordingly, the MFSS is required to deliver all equipment within the time specified in this solicitation and resultant contract; and no grace period because of back order situations shall be honored, unless written authorization is issued by the Construction Contractor, and a new delivery date is mutually established.

SSR-13. Compliance with Federal and State Standards.

All items to be purchased under this contract shall be in accordance with all United States governmental standards, to include, but not be limited to, those issued by the Occupational Safety and Health Administration (OSHA), the National Institute of Occupational Safety Hazards (NIOSH), the National Fire Protection Association (NFPA), and the California Occupational Safety and Health Administration (Cal-OSHA).

SSR-14. Modifications to Project Designs.

Any errors, omissions, ambiguities, and/or discrepancies, which are identified by the MFSS on the drawings or in the specifications during the course of the design work, shall be brought to the attention for resolution and response by the Engineer. Further, any discrepancies between the drawings and specifications which the MFSS failed to bring to the attention of the District before submitting its bid shall be interpreted by the Engineer. The MFSS hereby understands and agrees to abide by the Engineer's interpretation and agrees to complete the work in accordance with the decision of the Engineer. If the specifications are not complete as to any minor detail of a required system or equipment, but there exists an accepted manufacturing standard, such details shall be deemed to have been implied and required by the specifications in accordance with such standard.

SSR-15. Record Drawings.

Failure to submit complete as-built drawings as described in Section 01300 – Submittals will enact the liquidated damages clause for interim record drawing submittals described in this SSR-5. In addition, final payment may be withheld until as-built drawings are received from the MFSS.

SSR-16. Security Requirements at Project Site.

MFSS will comply with all local, state and national security and safety (OSHA) regulations applicable to the site of the work.

SSR-17. Service Facilities Shall be Provided by MFSS in the State of California.

MFSS shall provide and maintain service facilities or service agents located in the State of California which can provide parts and repairs.

SSR-18. Material Warranty.

The MFSS hereby acknowledges and agrees that all materials, except where recycled content is specifically requested, supplied by the MFSS in conjunction with this project shall meet the specifications for a period of two (2) years following Substantial Completion and the final acceptance of the equipment as defined in Specification Section 11400, Paragraph 4.2 or thirty

(30) months from the date of delivery of the last major piece of rotating equipment, whichever occurs earliest. MFSS's warranties are as specified in the MFSS's proposal and are in lieu of and exclude all other warranties, statutory, express or implied.

In the event any of the materials supplied by the MFSS are found to be defective or do not conform to specifications: (1) the materials may be returned to the MFSS at the MFSS's expense and the contract cancelled or (2) require the Vendor to repair or replace the materials at the MFSS's expense.

SSR-19. <u>Membrane System Warranty</u>.

A. DEFINITIONS

1. Substantial Completion of the Commissioning Test is defined as the review and acceptance of the Commissioning Test Report by the Engineer.

2. Ninety (90)-Day Operational Period is the ninety (90) days following Substantial Completion that the Construction Contractor shall be responsible for operation and maintenance of the Membrane System.

3. Final Acceptance is defined as the successful completion of the Commissioning Test, including the review and acceptance of the Commissioning Test Report by the Engineer.

B. GENERAL

1. All warranty certificates for membrane system membrane modules, equipment, software and membrane system performance shall be furnished to the District at the time Substantial Completion. Warranties shall commence on the date of Substantial Completion or one hundred twenty (120) days from the date of delivery of membranes, whichever occurs earliest.

2. The MFSS shall provide manufacturer's warranty certificates for the membrane modules and individual equipment as specified in individual equipment specification sections, in a form acceptable to the District, simultaneously with the initial shop drawing submittals for the membrane system and individual equipment.

C. MEMBRANE SYSTEM EQUIPMENT AND SOFTWARE WARRANTY

1. For a period of two (2) years, commencing from the date of Substantial Completion, or thirty (30) months from the date of delivery of the last major piece of rotating equipment, whichever occurs earliest, the MFSS guarantees the following:

    a. <u>Membrane System Equipment Warranty</u>. That all work, materials,

equipment and products provided by the MFSS, exclusive of the membrane modules, will be free from faulty materials, workmanship, or defect at the time of delivery, provided that the equipment is used, cleaned and maintained in accordance with the procedures defined in the MF/UF membrane system operation and maintenance technical manuals.

b. Programmable Logic Controller (PLC) Software Warranty. That the MFSS will make necessary changes and implement upgrades to the PLC software relating to providing solutions to all membrane system programming defects or deficiencies encountered during testing and operation of the membrane system for the operation of the MFSS's systems only.

2. The MFSS shall make, or have made at the expense of the MFSS, repairs, adjustments, replacements, or other corrective work necessary to restore or bring into full compliance with the requirements of the specifications any part of the work, materials, or equipment, which during the warranty period is found to be deficient with respect to any provision of the Specification, provided that the equipment is used, cleaned and maintained in accordance with the procedures defined in the MF/UF membrane system operation and maintenance technical manuals.

3. In the event that initial operation and testing, system operation and commissioning, performance testing, or operation during the two (2) year warranty period disclose latent defects or failure to meet the contract requirements, the MFSS, upon notification, shall proceed at once to furnish, such new materials and equipment or parts as may be necessary to conform to specification requirements, and shall perform, arrange for or reimburse District or Contractor for disassembly and reassembly costs resulting from defects or failure. The MFSS shall receive no additional compensation therefore.

4. If, in the performance testing or operation of the equipment after installation, District finds latent defects or finds that equipment and/or software programming fails to meet any requirements of the Specifications, District shall have the right to make reasonable use of such equipment until it can be shut down for correction of defects without injury to District; provided that the period of such operation pending the correction of defects shall not exceed 6 months without the written consent of the MFSS.

5. Malfunction of material and equipment occurring more than once during the two (2) year warranty period shall be cause for equipment and/or software programming replacement and an extension of the warranty period to a date of one (1) year beyond the original two (2) year warranty period on that component.

6. Prior to the expiration of the warranty period, the MFSS shall provide a hard copy of documentation of the updated system software to the District.

D. SYSTEM PERFORMANCE WARRANTY

1. For a period of two (2) years, commencing from the date of Substantial Completion, or thirty (30) months from the date of delivery of membranes, whichever occurs earliest, the MFSS shall warrant that the membrane equipment and ancillary systems when operated within conditions specified in the contract will meet the Performance Criteria as specified in Section 11400 – Membrane System.

2. A one (1)-year performance warranty test shall be performed nine (9) months after the completion of the Ninety (90)-Day Operational Period to verify that long-term performance of the membrane system is operating within five percent (5%) of the original specified performance criteria. In the event that the warranty test does not meet the original specified performance criteria, the MFSS shall repair or replace the faulty materials at the MFSS's expense. If the feed water quality to the MF/UF membrane system does not fall within the range specified Section 11400, the District and Engineer will evaluate feed water quality at the time of the one (1)-year performance warranty test and provide the MFSS with acceptance guidelines based on the new water quality.

    a. The MFSS shall furnish the services of qualified technical personnel for up to five (5) Person-days at the site to perform the one (1)-year warranty test and system cleaning.

    b. The one (1)-year performance warranty test will be satisfactorily completed when performance requirements have been met for a continuous operational period of forty-eight (48) hours and accepted by the District according to the Commissioning and Testing requirements as modified below:

        i. Review and acceptance of the Commissioning Report Test supplement.

3. The performance warranty period shall be extended by 12 months if:

    a. The MF/UF membrane system fails to meet the Performance Criteria satisfactorily within the one (1) year System Performance Warranty period per Appendix D .

    b. System requires operational changes or cleaning beyond the operation and maintenance per Appendix D.

4. District shall make available to the MFSS electronic records of historical performance for the MFSS's review.

5. Within seven (7) calendar days of notification of unsatisfactory performance of

the membrane system, the MFSS shall take the necessary actions, to restore the performance of the membrane system in accordance with the membrane performance requirements set out in Section 11400 – Membrane System.

6. The MFSS is responsible for all costs associated with corrective actions taken, including material increases in power or chemical consumption over the ten (10) year total present worth (TPW) period when compared to Guaranteed Operation and Maintenance Present Worth Cost.

7. Where actual membrane performance falls or is anticipated to fall below the values set out in the Net Present Worth Cost in Appendix D during the performance warranty period, the District shall immediately notify the MFSS. The District shall make available to the MFSS electronic records of historical performance for the MFSS's review. Within seven (7) calendar days of notification by the District of unsatisfactory performance of the membrane system, the MFSS shall troubleshoot the performance failure and take one or more of the following corrective actions in order to restore the membrane system to performance as specified in Section 11400 – Membrane System.

    a. Review and optimize system operation as appropriate

    b. Repair modules

    c. Perform additional cleaning

    d. Replace modules with new modules

    e. Add modules into expansion slots

    f. Replace modules with new modules of different version, acceptable to the District and the California Department of Health, which offer technological advantages

    g. Repair or replace other malfunctioning MF/UF membrane system equipment or ancillary systems

8. The MFSS is responsible for all costs associated with corrective actions taken.

9. The MFSS specified maximum temperature corrected flux (gfd) and maximum TMP pressure (psi) in Appendix D shall not invalidate the System Performance Warranty. Operation and maintenance costs directly associated with the period of time when the operating flux exceeds the design flux shall be factored out of the Actual Operation and Maintenance Present Worth Cost when compared to Guaranteed values provided in Appendix D .

E. EXTENDED MEMBRANE MODULE WARRANTY

1. The MFSS shall provide an Extended Membrane Module Warranty. The Extended Membrane Module Warranty shall commence upon completion of the Ninety (90)-Day Operational Period or one hundred twenty (120) days from the date of delivery of membranes, whichever is earliest. For a period of seven (7) years, the MFSS guarantees that the membrane modules will be free from defects in materials and workmanship. Defects shall be as defined in Paragraph SSR-19, E.9.

2. The MFSS shall provide a warranty certificate, in a form acceptable to the District, to secure the MFSS's performance of its obligations herein. Certificate shall be submitted for District's review and approval simultaneously with the initial shop drawing submittals for the MF/UF membrane system (See Section 11400 – Membrane System).

3. At all times during the Extended Membrane Module Warranty period, the District shall be responsible for pulling, transferring, and returning defective modules to and from the preservation solution and the membrane unit (skid). The District shall provide the MFSS with notification of any defect at least seven (7) calendar days in advance of its intent to remove the membrane module(s) from service to preservation. The MFSS shall have the option during such advance notice period to send a technician to witness the membrane module(s) in operation prior to removal at no cost to the District. The seven (7)-day advance notice shall be waived by the MFSS if immediate membrane module removal and replacement is required to meet capacity requirements.

4. During the first two (2) years of the Extended Membrane Module Warranty period, repair and replacement of defective membrane modules shall be the sole responsibility of the MFSS. The MFSS shall be responsible for services and one hundred percent (100%) of costs required to repair and replace defective modules, including labor, materials, tools, packaging, shipping, and shipping coordination. The MFSS shall repair or replace defective membrane module(s) within fourteen (14) calendar days of notification of defect by the District.

    a. The District will return to the MFSS the entire defective membrane module with the serial number to qualify for a replacement module.

5. During the remaining five (5)-year term of the Extended Membrane Module Warranty, the MFSS shall be compensated on a pro-rata basis for replacement membrane modules supplied under the terms of this Extended Membrane Module Warranty to replace modules originally installed as part of the project. The MFSS shall ship and deliver to the site of the project, replacement membrane modules and supplies for module repairs for installation by the District within twenty-eight (28) calendar days of notification of defect by the District. The amount to be paid to the MFSS shall be determined in accordance with the following price calculation formula:

    Price = $\frac{\text{(Module Failure Date – Warranty Start Date)}}{}$ X (actual MMPP)

Total Warranty Period (84 months)

(MMPP - Membrane Module Purchase Price)

a. Actual MMPP at time of purchase shall be determined per Paragraph E, below.

6. The District shall be responsible for pulling, transferring, and returning modules to and from the preservation solution and the skid within the twenty-eight (28) calendar days of notification of defect as specified in Paragraph 5 above.

7. Membrane modules that serve as replacement modules under the terms of the Extended Membrane Module Warranty shall be free from defects in materials and workmanship as described herein.

8. District shall provide the MFSS with notification of any defect at least seven (7) calendar days in advance of its intent to remove the membrane module(s) from service to preservation. The MFSS shall have the option during such advance notice period to send in a technician to witness the membrane module(s) in operation prior to removal. During the last five (5) years of the warranty term, the MFSS shall ship and deliver to the site of the project, replacement membrane modules and supplies for module repairs for installation by District. The seven (7)-day advance notice shall be waived by the MFSS if immediate membrane module removal and replacement is required to meet capacity requirements.

9. Defects in materials and workmanship are as defined herein:

   a. Integrity Failure Defects: Membrane integrity testing shall be established to meet the Design and Performance Criteria from Section 11400, Paragraph 2.1 for each membrane module and for each membrane unit (skid). Membrane modules shall be considered to have integrity failure defects under the following conditions:

      i. If a module fails the membrane integrity test, and cannot be repaired.

      ii. If for a single membrane module more than 0.50 percent (one-half of one percent) of the fibers have required repair (i.e., by pinning or gluing) during the Extended Membrane Module Warranty period, then that module shall be considered to be defective. An individual fiber shall be defined as requiring repair if it has been determined that it is causing the system to fail the membrane integrity test as specified in the Performance Criteria (Section 11400 – Membrane System, Paragraph 2.1.D).

      iii. If for an entire membrane cassette more than ten percent (10%) of the membrane modules fail the membrane integrity test in a

continuous three (3)-month period, then all of the membrane modules in that membrane unit shall be replaced. In lieu of replacing the entire cassette membrane modules, the MFSS has the option to demonstrate to the satisfaction of the District that the failure is isolated to a production or a shipping unit rather than several batches. In that case, replacement will be required of the entire production or shipping unit.

b. Irreversible Flux Loss Failure Defects: During Commissioning Testing, the lowest observed ten (10) minute average clean-membrane permeability will be recorded. This observed value will be the benchmark to determine whether future operational permeability (corrected for temperature to 20°C) are within the specified allowance for determination of membrane module operational life (measured on a skid basis). Permeability will be temperature-corrected based on the following formula:

$$\text{Permeability } 20°C = \text{Permeability Observed} * e^{(-0.0239*(\text{TObserved}-20))}$$

Provided that the equipment is used, cleaned and maintained in accordance with the procedures defined in the MF/UF membrane system operation and maintenance technical manuals, the membrane module's operational life (as measured on a train basis) will be deemed to have ended and require replacement when one (1) of the following conditions occurs:

i. The permeability post CIP must be within 50% of the lowest observed 10-minute average clean-membrane permeability observed at the end of the 9-month testing period of the 1-year performance warranty test.;

ii. The temperature-corrected permeability becomes greater than the maximum allowable permeability as stated by the MFSS in Appendix D over the entire Extended Membrane Module Warranty period;

iii. The required chemical use exceeds the annual values as stated by the MFSS by twenty percent (20%) or more.

iv. For the duration of the extended warranty, the actual maximum operating clean-membrane TMP must be within 50% of the of the maximum TMP recorded at the end of the 9-month testing period of the 1-year performance warranty test.

10. The MFSS specified maximum temperature corrected flux (gfd) and maximum TMP pressure (psi) as specified in Appendix D shall not invalidate the Extended

Membrane Module Warranty.

F. GUARANTEED MEMBRANE MODULE PURCHASE PRICE (MMPP)

1. The Baseline Membrane Module Purchase Price (BMMPP) shall be the value, in U.S. Dollars, for one membrane module listed in the MFSS's Proposal No 217529. BMMPP is quoted FCA, GE manufacturing facility, with packaging, freight and taxes excluded. As of June 1, 2012, GE's additional cost for packaging, freight and taxes (FOB) to Perris, CA is $108 per module, regardless of quantity shipped. GE will provide packaging, freight and taxes on modules covered under the extended membrane module warranty at cost.

2. The actual MMPP at the time of purchase (during the Extended Membrane Module Warranty period) shall be based on the following:

    a. The BMMPP subject to an increase using the Consumer Price Index ("CPI"). The CPI shall be the CPI for All Urban Consumers, All Items, Los Angeles-Riverside-Orange County, California (1982-84=100). The baseline for calculation of upward adjustments to the CPI shall be the CPI index published as of the date of Substantial Completion of the general construction contract. The CPI adjustment will be the latest CPI index published as of the date when a module purchase order is made by the District, adjusted from the CPI value as of the date of Substantial Completion of the general construction contract.

3. The MFSS shall guarantee the above MMPP determination in writing as the maximum purchase price per module for twenty (20) years following the date of Substantial Completion of the general construction contract for installation of the membrane system and shall submit this guarantee to the District upon Substantial Completion of the general construction contract. MMPP applies to module replacement only.

[END OF SECTION]

[PAGE LEFT INTENTIONALLY BLANK]

EASTERN MUNICIPAL WATER DISTRICT
SPECIFICATION NO. 1169W
PWFP REJECT RECOVERY FACILITY
GE PRE-NEGOTIATED MEMBRANE SUPPLY PROPOSAL (# 217529)

SECTION 11400

MEMBRANE SYSTEM

PART 1 -- GENERAL

1.1 GENERAL REQUIREMENTS

A. PURPOSE

1. The Microfiltration/Ultrafiltration System Supplier (MFSS) shall furnish a complete and operable second stage Microfiltration/Ultrafiltration (MF/UF) membrane system for the treatment of reject water from an existing MF/UF membrane system.

   a. The Reject Recovery System shall be installed at the Perris Water Filtration Plant (PWFP) located at 19750 Old Evans Road near Rider Street in Perris, California in the County of Riverside.

2. INCORPORATION INTO MAIN PROJECT CONSTRUCTION CONTRACT

   a. The District intends to retain the services of a General Engineering Construction Contractor (Construction Contractor) for the construction of the PWFP Reject Recovery Facility.

   b. The MF/UF Membrane System shall be incorporated into the Main Project Contract as a fixed cost pre-negotiated proposal from the MFSS, and shall be the basis of a Subcontract or Purchase Order between the Construction Contractor and the MFSS. The MFSS agrees that the Construction Contractor shall be wholly responsible under the Main Project Construction Contract for the purchase and installation of the MF/UF Membrane System, and the administration of the Agreement.

B. Abbreviations and Definitions Used in This Section.

1. Reject Water: Concentrate from the existing GE-Zenon ZeeWeed® ultrafiltration membranes.

2. Membrane Module: The smallest component of a membrane system in which a specific membrane surface area is housed in a device with a filtrate outlet structure.

3. Membrane Skid/Cell: A group of membrane modules that share common valving, that provide filtration as a unit, and that can be isolated as a group for testing, cleaning or repair.

4. Membrane Train: A group of membrane skids/cells and process equipment that provides independent filtration of water at a fraction of the total treatment plant design flow rate.

5. Net filtrate production capacity: Equal to the membrane filtrate flow minus backwash supply water flow, CIP water flow and other demands that do not contribute to usable treated water, including Membrane Integrity Testing.

6. Maximum instantaneous flux: Maximum membrane throughput at any moment in time of operation, expressed as flow per unit of membrane feed water side area in units of gallons per square foot per day (gfd).

7. Daily Operating Recovery: The ratio of net filtrate production to feed flow calculated per day.

8. MFSS: The Microfiltration/Ultrafiltration equipment manufacturer/supplier awarded to supply, deliver, inspect, start up, and commission the MF/UF Membrane System. The MFSS for these contract documents is Zenon Environmental Corporation d/b/a GE Water & Process Technologies (GE).

9. MF/UF: Microfiltration/Ultrafiltration.

10. MW: Maintenance Wash (synonymous with Maintenance Clean, Chemically Enhanced Backwash and Enhanced Flux Maintenance) – a short duration, frequent and automatic cleaning process of the membranes in-situ, typically using chlorine or citric acid, and occurring typically daily.

11. CBOD: Carbonaceous Biological Oxygen Demand.

12. CIP: Chemical Clean in Place (synonymous with Chemical Clean) – the periodic application of a chemical solution (or series of solutions) to a membrane unit in-situ for the intended purpose of removing foulants and restoring permeability and resistance to baseline levels.

13. VCP: MFSS Control Panel.

14. HMI: Human-Machine Interface.

15. PLC: Programmable Logic Controller.

16. SCADA: Supervisory Control and Data Acquisition.

17. VFD: Variable Frequency Drive.

18. Construction Contractor: General Engineering Construction Contractor, A License, to oversee overall construction of the reject recovery treatment system.

19. District: The public agency or authority, otherwise known as Eastern Municipal Water District (EMWD), with whom the Construction Contractor enters into a contract for the overall construction of the PWFP Reject Recovery Facility.

20. Engineer: The individual, partnership, corporation, joint-venture, or other legal entity named as such by the District. The Engineer of record named by the District for these Contract Documents is MWH Americas, Inc.

C. Summary of Section: This section specifies the MFSS requirements for the second stage MF/UF membrane system. Generally, requirements include equipment design, supply, delivery, review, checkout, start-up testing, commissioning, training and performance testing the MF/UF membrane system, and support equipment, pumps, air systems, valves, instrumentation and control and other accessories. All system components shall be complete and operable, sized to treat the required flow rate of the specified water quality and perform in accordance with the requirements established herein. The MFSS is responsible to provide a fully functional second stage MF/UF membrane system. Requirements and materials not specified herein or elsewhere in the contract documents shall be selected by the MFSS for the specified performance requirements and environmental conditions, based on standard practice.

D. MFSS Responsibilities:

1. The second stage MF/UF membrane system shall be furnished by a single MFSS who shall provide all of the services, equipment and appurtenances required to achieve a complete, fully integrated and operational system meeting all the design conditions and testing requirements, as specified herein. Equipment warranties and performance warranties shall be provided and serviced by the MFSS for the duration of the warranty period.

2. The MFSS shall be responsible for furnishing the complete second stage MF/UF membrane system and for coordination, proper sizing, and performance of all system components, except as specifically noted otherwise herein. The MFSS shall also provide contractor or construction submittals, inspection, start-up testing, commissioning, training, performance testing, technical manuals and warranties as required herein in the contract documents.

3. The MF/UF membrane system shall be delivered as a complete package including two (2) MF/UF membrane units for the second stage. One set of associated ancillaries shall be provided to support the second stage MF/UF membrane units where possible. The MF/UF membrane system layout shall conform to the area designated on the proposed site layout. Any skid mounted equipment shall be provided with all piping, valving, fittings, instruments, pumps and other components, so as to provide a complete system that will be fully functional once interconnecting piping and wiring is installed by the Construction Contractor.

4. The MFSS's scope includes the following supply and special services:

   a. Feed or vacuum pumps and motor systems.

   b. Second stage membrane filtration units.

   c. Backwash system.

d. Chemical cleaning systems, to include Clean-in-Place (CIP) and/or maintenance wash systems as required.

e. Chemical waste neutralization system (to be completed in membrane neutralization tank).

f. Where applicable, all interconnecting control cable and power wire, cable, and conduits between the skid-mounted MFSS control panels and the skid-mounted components.

g. Membrane integrity testing system.

h. Valves and actuators required for operation of the MF/UF membrane system.

i. Compressed Air and/or Blower Systems.

j. Water quality instrumentation and membrane performance monitoring systems.

k. Documentation of Material Selection with Corrosion Certification.

l. Specialized tools and maintenance equipment.

m. Spare parts.

n. Control System and Control Panels for membranes and support equipment including Allen Bradley ControlLogix Programmable Logic Controls (PLCs) with ability to communicate with Intellution “Fix 32” SCADA software. MFSS shall provide screen submittals to verify conformance with the District’s standard.

o. Designing all required equipment pads, equipment supports, fasteners, anchor bolts, seismic restraint systems, and appurtenances for the skid mounted equipment in accordance with the site-specific structural design. Drawings and design calculations, including seismic and anchorage drawings and design calculations, shall be provided in the MFSS’s Construction Shop Drawing submittal, signed and sealed by an Engineer licensed in the State of California.

p. Detailed construction shop drawings.

q. Engineering, Start-up, Commissioning and Warranty Services specified herein.

r. Operations and maintenance manuals (before plant start-up), and field training during the commissioning period.

s. All other goods and services required in these contract documents.

t. Membrane module performance warranty.

u. Membrane system performance warranty.

5. A list of equipment and responsibilities that is not included in the MFSS scope of work is included in GE Proposal 217529.

E. Construction Contractor Responsibilities:

1. Work prior to and succeeding MF/UF membrane system process and the following scope of work with relation to the MF/UF membrane system will be furnished by the Construction Contractor.

2. All equipment valves, appurtenances, anchorage, nuts and bolts, piping, etc. not specifically indicated to be provided by the MFSS necessary for a complete and operable system as described and indicated in these Contract Documents shall be provided by the Construction Contractor. The Construction Contractor is responsible for installation of all equipment, including but not limited to, valves, piping, and appurtenances, instrument wiring, conduit, control panels, motor control centers, VFDs, and other process, mechanical, electrical, and instrumentation and control materials and equipment.

3. Installation of the entire second stage MF/UF membrane system, including membrane system ancillary equipment, interconnecting piping between ancillary equipment and membrane trains shall be performed by the Construction Contractor.

4. Installation of interconnecting wiring and conduit, controls and instrumentation between ancillary equipment and membrane trains shall be performed by the Construction Contractor.

5. The Construction Contractor shall provide second stage equalization tanks.

6. The Construction Contractor shall provide all anchorage of equipment and skids on foundations based on the MFSS's furnished anchor system design. Anchorage calculations shall be submitted for approval prior the commencement of construction of any foundations.

7. The Construction Contractor shall be responsible for all anchor bolts and similar hardware required for complete installation of equipment, and for all temporary piping required to test and successfully commission the membrane system.

8. The Construction Contractor shall install the MF/UF membrane system per the MFSS's requirements. The Construction Contractor shall install membrane modules in accordance with the MFSS's procedures and as shown in the contract documents.

F. Single Supplier: Pre-qualified Membrane System Suppliers, No Equal:

1. Submerged System:

a. GE Water & Process Technologies

1.2 QUALITY ASSURANCE

A. Standards and Specifications: Reference to standards, specifications, manuals or codes of any technical society, organization or association, or to the laws or regulations of any governmental authority, whether such reference be specific or by implication, shall mean the standard, specification, manual, code or laws or regulations in effect on the last day for receipt of Bids.

B. Applicable Standards: Unless otherwise specified, the equipment covered by this specification shall be designed, manufactured and tested in accordance with the latest applicable standards of:

1. American National Standards Institute (ANSI)
2. American Society for Testing and Materials (ASTM)
3. Institute of Electrical and Electronics Engineers (IEEE)
4. National Electrical Code (NEC)
5. International Building Code (IBC)
6. National Electrical Manufacturer's Association (NEMA)
7. OSHA (Federal) and Cal-OSHA (California)
8. National Sanitation Foundation (NSF)
9. Hydraulic Institute (HI)
10. American Waterworks Association (AWWA)
11. Instrument Society of America (ISA)
12. Underwriter's Laboratories, Inc. (UL)
13. ASME Boiler and Pressure Vessel Code
14. American Welding Society (AWS)
15. Steel Structure Painting Council (SSPC)
16. Other applicable local jurisdictions and codes.

C. MFSS's Quality Assurance/Quality Control Program:

1. The MFSS shall have in-place a dedicated quality control quality assurance program.

2. The MFSS's Project Engineer Qualifications: The MFSS shall assign a project engineer for the duration of the project through Commissioning Testing. The project engineer shall be a single source of contact for the MFSS.

1.3 SUBMITTAL REQUIREMENTS

A. Submittals shall be provided in accordance with Section 01300 – Submittal Procedures. Specifically, submittals shall be provided as specified herein. The various types of submittals required and required contents are specified below.

1. MFSS Engineering: MFSS shop drawings shall be submitted under the seal and signature of a Professional Engineer registered in the state of California.

B. The District may consider waiving certain submittal requirements for certain equipment components if:

1. The MFSS notifies the District that the MFSS considers the requested information to be proprietary or covered by a patent; and

2. The District determines that the requested information is not required for the evaluation of the Contractor's Bid. If the District determines that the requested information is required, the requested information shall be submitted by the MFSS and protected by the District.

.

C. Construction Submittals: MFSS shall submit shop drawings, which it intends to use to fabricate the equipment. This includes, but is not limited to, arrangement, layout, and dimensions of all components of the membrane units, spool drawings, internal piping and wiring, cross sections, internal details, structural details, pumps, valves and a parts list. Drawings shall show sufficient details and information to connect equipment to wires, pipes, vents, drains, conduits, anchors, supports, and all other items, either MFSS-furnished, Construction Contractor-furnished or District-furnished, required to make the membrane system fully operational.

1. Drawings shall include, but not be limited to: wire terminal designations and numbers, field wiring diagram showing all required interconnections labeled consistently with terminal markings, opening sizes and connection type, elevations, dimensions, manufacturer's recommendations, anchorage details, and electrical information. Additionally, drawings shall show sufficient detail for the Engineer/Construction Contractor to design, fabricate, support, anchor, and install piping not furnished by the MFSS. This shall include, but not be limited to: dimensions, coordinates, linings, coatings, connections, layout, isometrics, support, anchorage, openings, materials, tie-in locations, thicknesses, standard connection details, reference size and fluid according to drawing abbreviations and symbols, reference drawing sheet number where piping is shown or is located, slope, elevation, and details. The MFSS's proposed method of pipeline construction shall be outlined. The drawings shall also include MFSS-verified locations of all tie-in points.

2. Product Information: MFSS shall submit original manufacturer's literature showing all drawings and descriptive data and brochures of each item of equipment and technical information for the item including, but not limited to, catalog or manufacturer's number, ordering information, figures and diagrams, materials, options, dimensions performance and electrical information. Electrical information shall include a wiring diagram and operational description.

3. Design drawings shall be provided and must comply with technical specifications and include but not be limited to the following:

    a. Membrane trains;

    b. Feed pumps and motors;

    c. Backwash system (if required);

    d. Chemical waste neutralization system, including tanks and pumps;

    e. Membrane integrity testing system;

    f. Valves and actuators required for operation of MF/UF membrane system;

    g. Water quality instrumentation and membrane performance monitoring systems;

    h. Blowers; and

    i. Air compressors.

4. Final drawings and calculations of all required fasteners, anchor bolts, and appurtenances for the skid mounted equipment. Calculations for mounting anchorage, and support of membrane skids and ancillary equipment and piping systems, including any required seismic restraint systems, shall be stamped and signed by a registered engineer licensed in the State of California.

5. The drawings shall be "Guaranteed," meaning that the MFSS agrees that it will not make any changes to the membrane system design details that may affect other equipment and materials not furnished by the MFSS following the District’s final review.

6. Hydraulic headloss through the membrane system at typical scenarios.

7. Electrical Single Line Diagram: An electrical single line diagram (SLD) shall show motors and other electrical loads for the membrane systems. The motors and other loads are to be identified so that their location within the building can be determined. Provide the following information: horsepower, volts, amps, number of phases, etc., in tabular format.

8. MFSS shall quantify heat loads and include such information with submittals.

9. Control Panel Fabrication and Wiring Details. MFSS shall submit information and shop drawings of the panel's interior and exterior elevations, drawn to scale, and detailing all equipment in or on the panel. The panel layout drawings shall also include a fully executed Bill of Materials, including manufacturer names and full model numbers. Also include information on, nameplates, conduit access locations, mounting provision, anchorage details, panel construction and details, manufacturers' model numbers, and color selection. The MFSS shall provide manufacturer's catalog sheets for each type of equipment, provided with the panel.

10. Special Tools and Spare Parts. The MFSS shall submit a listing of all special tools and/or spare parts required to be supplied with the equipment as specified herein. Additionally, the MFSS shall provide a listing of other available spare parts not provided with the equipment but recommended to be kept on hand. The listing will include: spare part names, catalog numbers, prices, shipping information, diagrams, distributor's sales contact and phone number.

D. Installation Manual. MFSS shall submit detailed written instructions, procedures, recommendations, and drawings required to install the membrane system. The installation manual shall be sufficient for the Construction Contractor to properly place, anchor, install, and connect all membrane system ancillary and support equipment both to each other and to other equipment not furnished by the MFSS. The installation manual shall include as a minimum the following: unloading, handling, storage, installation sequence, connection procedures, alignment requirements, plumbness requirements, assembly of shipped loose components, protection of components, wiring and termination requirements, checkout procedures, etc. for all MFSS-furnished equipment. MFSS shall submit the installation manual within forty-five (45) days of Notice to Proceed for manufacturing and material procurement.

E. Shop Drawing Submittals. MFSS shall submit a complete set of shop drawings,. This includes, but is not limited to, arrangement, layout, and dimensions of all components of the membrane units, spool drawings, internal piping and wiring, cross sections, internal details, structural details, pumps, valves, and a parts list. Drawings shall show sufficient details and information to connect equipment to wires, pipes, vents, drains, conduits, anchors, supports, and all other items, either MFSS-furnished, Construction Contractor-furnished, or District-furnished, required to make the membrane system fully operational.

1. All submittals shall be in accordance with Section 01300.

2. Corrosion Resistance Certification: The MFSS shall submit certification that the materials and/or coatings will not corrode or deteriorate and that their performance will not be adversely affected by the fluids and/or operating environment for at least ten (10) years. Notwithstanding the generality of the foregoing, the corrosion resistance certificate shall exclude the membrane modules and the gasket/seal interfaces between the membrane modules and membrane system piping (which are subject to separate express warranties) and normal consumables and wear items (such as pump seals).

3. Seismic Certification. MFSS shall submit certification, prepared by a civil or structural engineer registered in California, together with stamped calculations supporting his written certification, that the Membrane System meets the seismic

requirements for the plant location. MFSS shall meet seismic requirements as specified in Specification Section 00064 – General Conditions.

4. Electrical Loads: A list of all electrical loads associated with the membrane system. This shall include, but not be limited to, pumps, compressors, chemical feed pumps, valve actuators, clean-in-place solution heaters and mixers, instrumentation and control systems, etc. This information shall be provided in tabular format.

F. Commissioning Submittals.

1. Submit membrane factory testing representative batch wet test results prior to delivery of membranes. Equipment shall not be shipped until test results are approved by the Engineer. Factory testing of membrane system and control system panels shall be witnessed by up to two (2) District representatives and all costs associated with travel will be borne by the District.

2. Factory acceptance testing certification for individual membrane units prior to shipping.

3. Submit a list and quantities of chemicals, lubricants or other substances that will require disposal during installation and commissioning. The Construction Contractor shall be responsible for coordination of disposal and disposal of all such materials in accordance with all District and regulatory requirements, including obtaining any necessary permits for such disposal.

4. Submit complete protocols for all membrane system performance testing a minimum of sixty (60) days prior to start of any field testing procedures which shall include at a minimum the following items related to the membrane system to be prepared by the MFSS.

   a. Complete protocols for all membrane system performance and testing.

5. System Outage Requests: Submit requests for shutdown of existing systems as necessary to test or start up new facilities. Shutdown requests shall be submitted no later than 14 calendar days in advance of requested shutdown date(s)and in accordance with the contract documents.

6. Records and Documentation: Where required by the specifications, submit equipment installation certifications under those sections.

7. Certifications of Proper Installation: The MFSS and all other MF/UF membrane system equipment suppliers shall visit the project site following installation of the MF/UF membrane system to inspect the installation of the entire system (including all miscellaneous instrumentation and valves). If any problems or mistakes are found in the installation of the equipment, the errors shall be corrected. Once all identified installation errors have been corrected and re-examined by the MFSS and all other MF/UF membrane system equipment suppliers, the MFSS and all other MF/UF membrane system equipment suppliers shall submit Certifications of Proper Installation stating that its equipment has been properly installed in accordance with the its recommendations and directions, that it has been serviced with the proper

initial lubricants (if applicable), that the proper electrical and mechanical connections have been made, and that the complete system is ready for functional testing. Certification shall include Verification of proper earthing (grounding) of all electrical work or systems, if required. This certification shall be provided prior to the beginning of any functional testing of the equipment.

8. Commissioning Schedule and Startup Plan: Submit a commissioning schedule and startup plan that will be used as a guideline for the commissioning of the MF/UF Membrane System. The commissioning schedule and startup plan shall identify all of the commissioning requirements for all of the MFSS supplied equipment including but not limited to membrane systems, pumps, compressors, blowers, tanks, instrumentation controls and electrical systems.

9. Instrumentation Calibration Reports and Schedule.

10. Commissioning Test Report format: Submit the Commissioning Test Report format for information at least thirty (30) days before testing is scheduled to commence.

11. Commissioning Test Report: Submit the Commissioning Test Report for review by the Engineer within seven (7) calendar days following completion of the Commissioning Test in accordance with Section 01660 – Startup, Commissioning and Training.

12. Commissioning Test Report Supplement: Submit the Commissioning Test Report Supplement for review by the Engineer within seven (7) calendar days after completion of the ninety (90) Day Operational Period test.

13. Submit the membrane module location and Serial Number Warranty for each membrane module installed.

14. Submit startup records in accordance with the requirements of Section 01660 – Startup, Commissioning and Training.

15. Submit training documents and training schedule no less than 30 calendar days in advance of proposed training dates.

G. PLC Software Documentation Submittal: The MFSS shall furnish District with an electronic copy of the updated membrane systems' PLC and HMI programs, along with one copy of the PLC and HMI development software licensed to District, with full documentation and original CDs, at the time of Substantial Completion of the construction contract.

1.4 SPARE PARTS AND SPECIAL TOOLS

A. **General**: Spare parts and special tools shall be provided by the Construction Contractor prior to commissioning of the system. Spare parts shall be individually labeled and each box labeled with the contents

B. The following spare parts and special tools are to be provided for the MF/UF membrane system in addition to spare parts and special tools specified elsewhere in the Contract

Specifications. MFSS shall expand this list based on the specific requirements and configurations of their proposed MF/UF membrane system

1. Membrane systems: One shelf spare filtrate or booster pump.

2. One complete set of O-rings specific to each type of membrane system provided.

3. One complete set of O-rings specific to all components of each chemical feed system.

4. MFSS recommended spare parts for service of custom fabricated membrane components.

5. One of each type of gauge.

6. MFSS recommended special tools required for maintenance of the membrane system as a whole. This shall include any specialized equipment required for fiber replacement, fiber plugging and manipulation of the membrane modules.

7. One hand-held protocol calibration device with all attachments and modules necessary to interface with all protocol instruments supplied.

8. One magnetic flow meter calibration verification device to be used with all membrane system magnetic flow meters and as supplied by the magnetic flow meter manufacturer.

9. One spool piece for each size of magnetic flow meter supplied. The spool shall be of uniform thickness and constructed of material chemically inert to the process material but suitable to meet the pipeline performance characteristics.

10.

11. Spare PLC Input/Output module per Division 17 specifications.

12. One spare ultrasonic level transmitter.

13. Two-pressure switches for each range of pressure switch provided and one spare pressure switch for every ten (10) supplied.

14. Two spare control system network fiber optic transceivers (configuration to be selected by the Project Manager at the time of submittal).

15. One spare turbidity analyzer and transmitter.

16. Two spare 24VDC power supplies.

17. Three spare surge suppressors of each type.

18. Ten spare panel fuses for each range.

19. Quantity of spare terminal block relays – twenty percent (20%) of total field supply.

20. Quantity of spare ice cube relays – twenty percent (20%) of total field supply.

21. Quantity of spare interposing relays – twenty percent (20%) of total field supply.

22. Quantity of spare corrosion inhibitor capsules – twenty percent (20%) of total field supply.

PART 2 -- PRODUCTS

2.1 MEMBRANE SYSTEM DESIGN AND PERFORMANCE REQUIREMENTS

A. General:

1. Environmental Conditions

a. The second stage MF/UF membrane system shall be located an in enclosed building as indicated in the Contract Documents and as outlined below:

1) Ambient indoor temperatures will range from thirty degrees Fahrenheit (30°F) to one hundred and ten degrees Fahrenheit (110°F). Relative humidity will range from twenty percent to ninety percent (20% to 90%).

2) Chemical day tanks and feed equipment. Building shall be ventilated; the MFSS to design systems for indoor relative humidity as high as ninety percent (90%) and temperature as high as one hundred and ten degrees Fahrenheit (110°F) due to potential failure or no-operation of the building ventilation system, for a duration of up to seventy two (72) hours.

3) Mechanical equipment (pumps, blowers and compressors) requiring sound attenuation shall be enclosed in a room within the newly constructed building. Building shall be ventilated; the MFSS to provide systems for indoor relative humidity as high as ninety percent (90%) and temperature as high as one hundred and ten degrees Fahrenheit (110°F) due to potential failure or no-operation of the building ventilation system, for a duration of up to seventy two (72) hours.

4) When in operation, no single piece of equipment shall exceed the OSHA noise level requirement of 85 dBA for one hour exposure per day, as measured within three-feet in any direction, and excluding background noise.

b. Unless otherwise indicated, all components of the second stage MF/UF membrane system shall be installed on concrete slabs with adequate space between and around components to provide operation and maintenance access. All buildings and slab sections containing components of the second stage MF/UF membrane system shall be contiguous.

c. All electrical motors and other equipment shall be properly derated by the MFSS for the site elevation. Elevation shall be adjusted to current applicable coordinate system.

1) The PWFP Reject Recovery Facility is located at the Perris Water Filtration Plant at 19750 Old Evans Road near Rider Street, in Perris, California in the County of Riverside at an elevation of approximately one thousand four hundred and fifty (1,450) feet above mean sea level.

2. The second stage MF/UF membrane system must be designed to operate unattended 24 hours per day at maximum capacity.

3. The MFSS shall provide a membrane system sized and configured to meet the Operating Conditions specified herein and under the projected feed water quality and pre-treatment conditions described herein.

4. The second stage MF/UF membrane system shall be designed to filter reject water from the existing GE-Zenon ZeeWeed® membranes. The following feed water quality data table contains selected historic parameters and values from the District's existing supply. These are composite reject water quality values for Colorado River Water and State Project Water and these values shall be assumed as the MFSS's basis of design for the second stage MF/UF membrane system.

5. MFSS is responsible for complying with the water quality parameters summarized in Table 2 for the design of the second stage system.

6. The table below provides background information for the PWFP which may provide feed water parameters to the main PWFP (including raw water quality parameters for CRW and SPW). There may be soluble components in the water which will not be concentrated in the reject water from the existing GE-Zenon ZeeWeed® membranes.

Table 2. Composite Reject Second Stage Feed Water Quality Values for Colorado River Water and State Project Water

FEED WATER CONSTITUENT	UNITS	MINIMUM	MEDIAN	MAXIMUM
GENERAL				
pH	pH units	5.15	7.54	8.73
Temperature	°C	8.0	17.6	27.0
Total Alkalinity	mg/L ($CaCO_3$)	65.0	148.0	180.0
Total Dissolved Solids	mg/L	230	638	650
Total Organic Carbon	mg/L	7.0	22.2	67.0
Total Suspended Solids	mg/L	7	212	615
Turbidity	NTU	24.2	100	300
UVT at 254 nm	%	75.9	83.1	88.3

1. Source: CH2M Hill, 2009. Perris Water Filtration Plant and Hemet Water Filtration Plant Reject Characterization.

Note: The proposed MF/UF membrane system is expected to meet all operational criteria specified herein under the water quality conditions indicated in Table 2. In accordance with the

Submittal requirements of Paragraph 1.3.C, the MFSS shall indicate which feed water quality parameter(s) and values will void warranties if exceeded for review by the Engineer and District.

7. Commissioning Testing shall be conducted with the District's existing feed water supply. Testing on both raw Colorado River Water and State Project Water will be conducted.

8. Pre-Treatment and Other Chemicals:

    a. The membrane system performance requirements specified herein shall be met regardless of the fact that several treatment chemicals may be added to the feed water by the District upstream of the membrane process. The District may add any or all of the following treatment chemicals at the doses as follows:

        1) Aluminum Chloro Hydrate (ACH): 0 – 10 mg/L as needed for coagulation to achieve the UVT goal for disinfection.

        2) Ferric Chloride ($FeCl_3$): 0 – 10 mg/L as needed for coagulation to achieve the UVT goal for disinfection.

        3) Sodium Triphosphate ($Na_5P_3O_{10}$): 0 – 3 mg/L as needed to prevent calcium carbonate deposition.

    b. Other Chemicals: The MFSS shall provide a list of standard water/wastewater treatment chemicals and/or chemical concentrations that are not compatible with the proposed membrane systems and that will void the warranty if used by the District.

    c. The MFSS shall provide required dosage rates for any chemical required for pre- and post-treatment for the second stage MF/UF membrane system. Polymer or polymer blends shall not be used at any time.

B. Manufacturer Qualifications: Unless specified elsewhere, all equipment furnished under this specification shall be new and shall be the standard product of a manufacturer who is fully experienced, reputable, qualified and have proven experience in the manufacture of the equipment to be furnished.

C. MF/UF Membrane System Design Criteria:

1. Second Stage Membrane Units

    a. Number of Primary Units (Trains): = two (2) x 0.60 MGD (product water volume) skids configured as two (2) duty plus zero (0) standby, sized to provide a combined 1.2 MGD average daily product water flow. Installed membrane capacity shall be 0.50 MGD for each skid, for a combined 1.0 MGD average daily product water flow.

    b. Allowance for installation of ten percent (10%), or 0.10 MGD, additional membrane capacity in each train. The addition of a new train to obtain this additional capacity is not allowed.

D. MF/UF Membrane System Performance Criteria, no exceptions allowed:

1. Performance Criteria are applicable to the second stage MF/UF membrane systems, except where noted.

2. Daily Operating Recovery

    a. 85% at minimum design flow

3. Design instantaneous flux as guaranteed by the MFSS is located in GE Proposal No 217529, Appendix D. Instantaneous flux shall be based on an integrity test frequency of once every 24 hours.

4. Only one (1) set of MF/UF membrane system ancillaries shall be provided to support both the second stage membrane systems.

5. CIP Requirements

    a. Furnish a complete integral, automatic, membrane cleaning system designed to maintain membrane system performance by reducing the TMP to near clean-membrane conditions. The system shall be arranged such that control panels, pumps, motors, and associated components as indicated in the contract documents. The system shall be designed to clean the membranes in-place without requiring their removal from the tanks. The CIP system shall be sized to clean one membrane skid at a time and allow all other skids to remain in production.

    b. Provided that the MF/UF membrane system is used, cleaned and maintained in accordance with the procedures defined in the MF/UF membrane system operation and maintenance technical manuals, a CIP must not be necessary more frequently than once every thirty (30) calendar days of continuous system operation for the duration of the warranty period.

    c. Provided that the MF/UF membrane system is used, cleaned and maintained in accordance with the procedures defined in the MF/UF membrane system operation and maintenance technical manuals, a Chemical Wash must not be necessary more frequently than once every twenty four (24) hours of continuous operation for the duration of the warranty period.

6. Membrane Integrity Testing Requirements

    a. Direct membrane integrity testing shall occur utilizing the Pressure Decay Test conforming to the test method described in USEPA's "Membrane Filtration Guidance Manual", November 2005 (USEPA Document 815-R-06-009), with the exception that testing will be conducted at a minimum of every four hours and a maximum of every 24 hours. Bubble Testing conforming to the test method in the above referenced USEPA document shall be utilized as a follow-up to the Pressure Decay Test to identify specific breaches.

b. Indirect integrity testing with turbidimeters shall be continuous. One laser turbidimeter per membrane unit (skid) shall be provided to continuously monitor the filtrate water quality from that unit (upstream of blending) for integrity testing purposes. One laser turbidimeter shall be provided on the common filtrate line to continuously monitor the filtrate water quality from the membrane system for integrity testing purposes.

7. Filtrate water quality as measured via continuous monitoring instrumentation furnished and installed downstream of blending from all MF/UF membrane units shall meet the limits as specified in the following table.

Table 3. Filtrate Water Quality Requirements

Parameter	Limit	Unit
Turbidity, Maximum	0.1[1]	NTU
Giardia Lamblia	> 1.5	Log Reduction
Cryptosporidium	> 1.5	Log Reduction

1. Minimum 95% success rate

8. Hydraulic Requirements. The hydraulic conditions to be used for the design of the membrane system shall be as follows:

   a. Second Stage Membrane Units

      1) System shall be hydraulically capable of pumping, transferring and supporting 0.6 MGD of filtrate flow per train at the MFSS's recommended maximum TMP and with the initially installed membrane area. Filtrate flow per skid shall be measured by a dedicated flow meter mounted on each skid.

      2) The feed water supply to the MF/UF membrane system will be from a new equalization tank to be supplied by others.

      3) The pressure at the outlet of the MF/UF membrane system shall be assumed at a minimum 10 psig to ensure delivery to the head of the plant or to downstream disinfection processes. This pressure is subject to verification.

   b. MFSS to allow for headloss through the proposed membrane system.

9. Corrosion Resistance: The Construction Contractor shall be responsible for ensuring proper material selection for all membrane system components and piping provided by the Construction Contractor and for providing protective coatings in accordance with the requirements of the Corrosion Resistance Certification. The membrane system components, materials and/or coatings shall not be adversely affected by the below-specified fluids and/or operating environment for at least 10 years. Notwithstanding the generality of the foregoing, the corrosion resistance

certificate shall exclude the membrane modules and the gasket/seal interfaces between the membrane modules and membrane system piping (which are subject to expressed warranties) and normal consumables and wear items (such as pump seals).

a. Fluids:

1) Feed water of the quality as specified herein.

2) Membrane filtrate will be used for system service water such as backwashing and chemical cleaning.

3) Chemical solutions as required by the MFSS as part of a fully functional system.

b. Operating Environment:

1) Membrane system and ancillary equipment shall not be adversely affected by Environmental Conditions as specified in these Contract Documents.

2.2 SYSTEM EQUIPMENT REQUIREMENTS

A. The following system equipment requirements apply to both the second stage MF/UF membrane systems. Only one set of ancillary systems and one CIP system shall be provided to support both the second stage MF/UF membrane systems.

B. General

1. Where possible, materials listed on the District's Approved Materials List shall be used throughout fabrication and construction. The blowers shall be Aerzen positive displacement style, no equal. Valves in contact with chlorine above a concentration of 10 mg/L shall have Viton seats. All valves shall be DeZurik with electric actuators, no equal. The manufacturer of all centrifugal end suction pumps, consists of filtrate (permeate), backpulse and CIP pumps, shall be Goulds, no equal. Chlorine analyzers shall be Hach CI-17, no equal.

2. The existing plant chemical storage tanks shall be incorporated into the project as indicated in the contract documents. If the MFSS requires additional (or alternate) chemicals for the operation of the membrane system, chemical storage tanks and all associated feed system ancillaries for these additional chemicals shall be included as part of the scope of supply.

3. Where ancillary mechanical equipment is shared between two or more membrane units, the Construction Contractor shall provide at least one stand-by item of equipment. The additional stand-by item of equipment shall have a capacity greater than or equal to the largest duty item of equipment, to provide for redundancy for the system as a whole.

4. Equipment motor starters, MCC service and interfaces with PLCs shall be provided and coordinated by the Construction Contractor.

5. Where utilized, VFDs shall be supplied and installed by the Construction Contractor.

6. Equipment and surfaces shall be coated by the MFSS in accordance with the requirements of the Corrosion Resistance Certification (Paragraph 2.1.D.9) prior to shipment to the site.

C. **Submerged Membranes**: The MFSS shall supply complete all membrane modules, piping, valves and controls internal to the cells. The Construction Contractor will construct concrete tanks to the tolerances required for GE's high intensity design.

D. **Membrane Units**: All units provided for plant operation shall be fitted with the same number of membrane modules. Space in the membrane tanks shall be provided for the future addition of 10% extra membrane modules.

E. Frame: The support frame shall be designed to resist the static and dynamic loads imposed from the piping and equipment supported from the frame and from external forces.

1. Submerged Membrane Assembly: All membrane modules, piping, instrumentation, and other appurtenances shall be supported on a structural frame. All metals at or below the water line shall be Type 316L stainless steel.

2. Membrane Access: Platforms, access and egress to facilitate membrane maintenance shall be provided and shall be constructed of materials similar to or compatible with the module.

3. Membrane tanks shall incorporate removable covers and protective features to prevent exposure and damage to membranes during regular operation and maintenance activities.

4. All instruments, valves and any skid-mounted items shall be located within five feet of the finished floor elevation, where practical.

5. MF/UF membrane system train permeate pumps shall be provided with discharge check valves, suction and discharge isolation valves, and all other mechanical, electrical and instrumentation components required for a complete installation.

6. Each train shall be provided with a sample tap with manual isolation valve for collecting water samples from the feed water, filtrate, bleed or reject water, and backwash waste piping lines. Drains from sample taps shall be routed by the Construction Contractor to the floor drain system. The sample taps shall be easily accessible without any special tools or ladders.

F. **Pumps**: A complete feed and filtrate pumping system including pumps (duty only), air separation columns, air removal vacuum pumps, and all associated valves, instruments and appurtenances shall be provided. One (1) shelf spare pump shall be provided.

G. **CIP System**: The MFSS shall furnish a complete integral, automatic, membrane cleaning system designed to maintain membrane system performance by reducing the transmembrane pressure to clean-membrane conditions.

1. Hard-piped connections between the CIP system and membrane trains shall be completed by the Construction Contractor. The systems shall have all control panels, pumps, motors, and associated components located as indicated in the contract documents. All wiring required between pieces of the commonly mounted equipment shall be supplied, installed, and terminated by the MFSS. The system shall be designed to clean the membranes in-place without requiring their removal from the membrane tanks. The CIP system shall be sized to clean one membrane train at a time and allow the other train to remain in production. To prevent the contamination of filtrate related to cleaning operations, equipment shall be provided to include fully automated double block and bleed valves to provide an air gap so trains can be fully isolated.

2. Piping manifolds, complete with chemical injection points shall be provided with appropriate valving to divert the cleaning solution to and from all of the membrane elements. All conduit and wire required between pieces of commonly mounted equipment shall be supplied, installed, and terminated. The CIP system shall include double-walled FRP chemical mixing and solution tanks, heaters (if required), strainers (if required), and circulating pumps of sufficient capacity to clean all membrane elements in a single train at one time. Two (2) CIP pumps shall be provided in a duty/standby arrangement.

3. Equipment to prevent calcium carbonate or other precipitation during CIP shall be provided.

4. The CIP system equipment shall be shipped loose for Construction Contractor installation.

H. **Backwash System**: The MFSS shall furnish a backwash (or backpulse) system as necessary for operation of the MF/UF membrane system.

1. The scope of supply shall include all equipment and materials necessary to provide a fully operable backwashing system, including backwash pumps, piping, valves, tanks, chemical dosing equipment as necessary, appurtenances, instrumentation and controls.

2. Hard-piped connections between the backwash system and membrane trains shall be completed by the Construction Contractor. Piping manifolds complete with chemical injection points shall be provided with appropriate valving to divert the backwash supply and waste to and from all of the membrane elements. All conduit and wire required between pieces of commonly mounted equipment shall be supplied, installed, and terminated by the MFSS. Where backwash pumps operate independently within the membrane system, two (2) backwash pumps in a duty/standby arrangement shall be provided by the MFSS.

I. **Air Compressors and Receivers:** The MFSS shall supply air compressors and receivers to be used for the membrane integrity system and membrane system

pneumatic valves. Compressed air systems shall be complete, with fully automatic control. Two (2) air compressors shall be provided in a duty/standby arrangement. Additional requirements for the compressed air system include:

1. Two (2) (1+1) rotary screw type compressed air systems with receivers shall be provided.

2. Air Compressor and receiver requirements are as follows:

    a. 460 volt, 3 phase, 60 Hz.

    b. Each compressor shall be sized for one hundred percent (100%) of the required capacity at 150 psig discharge pressure.

    c. The compressed air system equipment shall be shipped loose for Construction Contractor installation.

    d. Provide acoustical enclosures for compressors that are available from the same manufacturer as the compressor.

J. **Blowers:** The MFSS shall design and supply blowers to be used for air scour of the membranes, if required for the proper operation of the MF/UF membrane system. Blower systems shall be complete, with fully automatic control. Two (2) blowers shall be provided in a duty/standby arrangement. Additional requirements for the blower system include:

1. Two (2) (1+1) blowers shall be provided.

2. Blower requirements are as follows:

    a. 460 volt, 3 phase, 60 Hz.

    b. Each blower shall be sized for one hundred percent (100%) of the required capacity.

    c. The blowers shall be shipped loose for Construction Contractor installation.

    d. Provide acoustical enclosures for each blower that are available from the same manufacturer as the compressor.

K. **Piping Coordination**: The Construction Contractor shall provide engineering (submittals to be stamped by a registered California Professional Engineer), drafting, materials and fabrication for the installation, testing, cleaning and commissioning of all interconnecting piping not supplied by the MFSS. This includes pipe and fittings, pipe supports, vents, drains, drip legs, steam and condensate traps, steam trap piping, drains to the floor drains and all required accessories, in accordance with acceptable industrial standards and subject to MFSS and Engineer approval. The Construction Contractor shall be responsible for providing appropriate diameter flanges for connecting to all flanges provided by the MFSS at each train or other equipment requiring such

connection. Any modifications to piping sizes or layout shall be subject to review by the Engineer.

L. Piping for membrane units shall be constructed of 316/316L stainless steel or Schedule 80 CPVC as specified by the MFSS with flanged valve or equipment connections. Unions or Victaulic couplings shall be provided to allow for the removal of valves, meters and other equipment requiring maintenance.

M. MF/UF membrane system trains shall be provided with discharge check valves, suction and discharge isolation valves, and all other mechanical, electrical and instrumentation components required for a complete installation. All valves that require automatic control shall be provided with pneumatic or electric actuators furnished by the MFSS and installed by the Contractor.

N. MFSS to provide all specialized tools and maintenance equipment as specified herein.

O. MFSS to provide sufficient spare parts for at least one year of routine operating and maintenance requirements for the membrane system.

P. Contractor to provide provided each train with a sample tap with isolation valve for collecting water samples from the feedwater, filtrate for each train, bleed or reject water for each skid/cell piping, and backwash waste piping. The Construction Contractor shall provide 316 stainless steel panel around tap. Drain line from sample tap and panel will be connected by the Construction Contractor to a floor drain system. The sample panel or tap shall be so equipped to prevent splashing and to provide adequate drainage of sample fluid and be easily accessible without any special tools or ladders. All sample taps to be chrome material with no threads.

Q. **Instrumentation:** Mechanical gauges, flow meters and analytical equipment necessary for automatic operation, routine maintenance and trouble shooting of the MF/UF membrane system shall be provided by MFSS. At a minimum, on-line analytical measurement devices shall be included to measure the following parameters, with measurements continuously recorded and monitored by the membrane system PLC:

1. Common headers

    a. Feed water turbidity

    b. Filtrate turbidity

2. Per Train

    a. Tank level transmitter Feed water flow

    b. Filtrate flow rate

    c. Filtrate pressure

    d. Filtrate turbidity

e. Reject flow rate (as applicable)

f. Backwash feed flow (as applicable)

g. Backwash pressure (as applicable)

h. CIP flow rate

i. Backwash and CIP waste flow

j. Air scour flow (flow switch)

k. Air scour pressure (indicator)

N. **Membrane Integrity Testing System**: Each membrane train shall include equipment provided by the MFSS to verify the integrity of the membrane barrier. Integrity verification systems shall include equipment and controls to perform air pressure decay (pressure hold) tests, and bubble testing to assist operators in locating an individual failed membrane module and fiber and isolate compromised modules. Air pressure decay tests shall be able to be initiated either manually or automatically at regular adjustable intervals. When pressure decay tests are conducted automatically, the MF/UF membrane control system shall place the skid back in service following completion of a test with a passing result. Skids/cells shall remain shut down following completion of a test with a failing result. All equipment that is necessary to identify and repair a compromised or broken fiber using bubble point testing must be provided by the MFSS.

1. The Pressure Decay and Bubble Tests shall conform to the test methods described in USEPA's "Membrane Filtration Guidance Manual", November 2005 (EPA Document 815-R-06-009). The air pressure decay test shall provide:

   a. Resolution: Responsive to an integrity breach of three (3) microns or less.

   b. Sensitivity: To exceed 1.5 log.

   c. Frequency: Adjustable from four (4) hours to 24 hours.

2. The applied set point air pressure shall be based on manufacturer's system specific bubble point model calculations, and as approved by the Engineer and the California Department of Health.

3. Threshold for acceptable pressure decay rate (psi/minute) shall be determined based on manufacturer's membranes and applied pressure, and as approved by the Engineer and the California Department of Health.

4. The integrity verification system shall have the flexibility to be performed at a resolution responsive to an integrity breach of three (3) microns or less.

2.3 MEMBRANE CONTROL SYSTEM

A.

B. The membrane control system shall consist of, but not be limited to, the following principal hardware components.

1. NEMA-4 316 stainless steel enclosure with fan, fan switch, air conditioned/climate control, and filtered louvers.

2. Master processor with auto switchover and redundant power supplies.

3. All necessary I/O cards to provide a complete automated control system for the membrane system.

4. UPS to provide backup power for two (2) hours, and a manual transfer switch between normal supply and UPS supply.

5. 25% spare I/O of each type installed per contract documents (See Division 17 specifications),, spare power supply, spare communications card.

6. Hardwire control contacts for backwash pumps (if required).

7. Ethernet data connection to the existing plant control system Allen Bradley Programmable Logic Controller (PLC).

8. Allen Bradley PLC, complete with power supply and I/O cards. Allen Bradley PLC's shall communicate using ControlNet.

9. Panic stop button located on the control panel and contacts for a remote stop button.

C. The membrane control system shall be provided with, but not limited to, the following principal software components.

1. An Allen Bradley ControlLogix PLC program in conventional ladder logic to provide a complete automatic operation of the membranes, including automatic backwash, startup, shutdown, emergency shutdown on equipment failure, and stopping and restarting on a power outage.

2. Interlocks and control logics for backwash systems, air scour systems, and clean-in-place.

3. Communication with the existing plant Intellution (Fix32) SCADA system to send and receive commands to control all equipment pertinent to the membrane functions on an Ethernet data connection.

4. Set of graphics screens to load onto the existing plant control system workstation to show operating data and control points for each membrane unit using Intellution (Fix32) software.

5. Programming and configuration of the proposed PLC, existing main PLC, and graphics software and screens to match and integrate with existing District standards.

6. The MFSS shall provide, but not be limited to, the following documentation:

    a. Descriptive copy of the ladder logic (hard and electronic copies) and screens.

    b. A manual providing an operating description of each control point and data point for the membrane control graphic screens.

    c. Wiring and loop diagrams.

PART 3 -- EXECUTION

3.1 MEMBRANE SYSTEM ENGINEERING

A. Required Services during Shop Drawing and Construction: The MFSS shall provide the services of competent and experienced personnel led by the MFSS's Project Engineer, who have complete knowledge of the proper design, installation, programming, operation and maintenance of the MF/UF membrane system equipment for the entire duration of the engineering design, construction, start-up and commissioning periods.

B. Required Services During SCADA System Integration: The MFSS shall provide the services of competent and experienced personnel, led by the MFSS's project engineer, who have complete knowledge of proper programming and operation of the membrane system equipment during the graphics meeting to help coordinate the HMI graphics development. The MFSS's service personnel will attend three (3) site visits, each working day on-site during the SCADA System Integration period to meet with the Engineer and District to review the SCADA System Integration documents.

    1. The MFSS is required to coordinate with the Construction Contractor and District regarding integration of the additional SCADA screens being added to the existing plant-wide Allen Bradley software. The SCADA System Integration documents shall be submitted prior to factory acceptance testing, allowing the Engineer and District thirty (30) days to review, and prior to testing.

    2. The MFSS shall submit all requirements for graphic interface screens, along with a narrative, explaining each screen and the functions associated with it. Final HMI to be supplied and installed by a programmer retained by the District.

    3. A graphical network diagram shall be submitted to the Engineer, illustrating all PLC, HMI, and SCADA network connections, along with their associated node addressing. A fully documented PLC program shall be submitted to the Engineer, prior to factory acceptance testing of any panels.

3.2 PRODUCT DELIVERY, STORAGE AND HANDLING

A. The MFSS shall submit documentation that clearly delineates how the equipment shall be delivered, handled, and stored once delivered to site. This documentation shall be submitted thirty (30) days prior to the equipment delivery.

B. The Construction Contractor shall be responsible for the storage of all equipment delivered to site in accordance with the MFSS's instructions.

C. All parts shall be properly protected so that no damage or deterioration will occur during a prolonged delay from the time of shipment until installation is completed, and the units and equipment are ready for operation.

D. Finished surfaces of all exposed openings shall be protected.

3.3 INSTALLATION

A. Mechanical installation work by the Construction Contractor of the fabricated membrane units and remote assemblies shall be installed in conformance with the MFSS's recommended procedures, instructions, and approved Shop Drawings.

B. The position of each membrane element shall be recorded by element serial number by the MFSS. If the MFSS has specified a loading order based on element type or test data, the elements shall be installed in that order.

C. Following installation and prior to any testing, the MFSS shall inspect the MF/UF membrane system installation and certify that the membranes, cassettes, and remote assemblies were correctly installed. The MFSS shall submit final certification of installation to the Engineer.

PART 4 -- GENERAL – MEMBRANE SYSTEM COMMISSIONING AND TESTING

4.1 PURPOSE

A. The purpose of the pre-commissioning period is to test, operate and optimize the MF/UF membrane system settings prior to the Commissioning Test.

B. The pre-commissioning period and satisfactory completion of the Commissioning Test shall be completed in accordance with this and other Sections of the Contract Specifications. The purpose of the Commissioning Test is to confirm that the MF/UF membrane system can perform within specifications during a specified operational period, and to verify that both the System and each membrane unit are properly installed, operational, capable of completing various operational cycles without fault, and that the system components are free from cavitation, overheating, overloading, vibration, or other operating problems.

C. The purpose of the ninety (90)-day Operational Period testing is to immediately address any operational issues and make adjustments to the MF/UF membrane system to

ensure that the performance criteria are met for the first ninety (90) days of operation. Operational Period testing shall demonstrate that the MF/UF membrane system is meeting operation and maintenance requirements as specified in Table 3 and Appendix D .

4.2 DEFINITIONS

A. Startup is defined as testing, demonstrations, and other activities as required to achieve Substantial Completion. Startup includes pre-commissioning and commissioning activities, manufacturer's services including training, certifications of readiness for testing, and troubleshooting, checkout, and shakedown activities.

B. Pre-commissioning is the systematic demonstration through testing and extended operation that major equipment and ancillary systems, including related components, sub-systems, and systems operate properly and consistent with their intended function. Pre-commissioning involves balancing, adjustments, calibration, loop checks, and loop validation. Pre-commissioning shall simulate shutdown conditions, failure conditions, power fail and restart, bypass conditions, and failure resets. Pre-commissioning will not be considered complete until successful results and documentation of tests and manufacturer's certifications required by the Contract Documents are submitted and accepted by the Engineer. Pre-commissioning of all portions of the project shall be successfully completed prior to starting Commissioning.

C. Commissioning is the verification that the complete project functions on an extended basis in full conformance with the Contract requirements.

D. Substantial Completion of the Commissioning Test is defined as the review and acceptance of the Commissioning Test Report by the Engineer.

E. Performance Testing is the verification of previous Commissioning Testing, as defined in this Section.

F. Ninety (90)-Day Operational Period is the ninety (90) days following Substantial Completion that the Construction Contractor shall be responsible for operation and maintenance of the Membrane System.

G. Final Acceptance is defined as the successful completion of the Commissioning Test, including the review and acceptance of the Commissioning Test Report by the Engineer.

H. For purposes of furnishing manufacturers' services, the following definitions shall apply:

1. MFSS's or Manufacturer's Representative: Employee of MFSS or other respective equipment manufacturer who is factory-trained and knowledgeable in technical aspects of their products and systems. Local or regional sales staff is not considered as an acceptable substitute for the manufacturer's representative specified herein.

2. Person-Day or Instructor-Day: One person for eight (8) hours straight time, on the project site, exclusive of Saturdays, Sundays, or holidays. Does not include travel time, or lunch or meal times.

4.3 GENERAL

A. Prior to initiating any testing, the Construction Contractor shall submit a Startup and Testing Plan in accordance with Section 01660 – Startup, Commissioning and Training.

B. All testing in this section shall be coordinated by the Construction Contractor and under observation by the Engineer. All temporary equipment, piping, valves or other materials required to complete testing and commissioning in accordance with this section shall be furnished by the Construction Contractor. The District shall provide water, power and chemicals for use during testing.

C. Commissioning Test and Operational Period testing shall be completed using the District's existing feed water supply. For testing, the membrane feed water and the required membrane filtrate water characteristics are as indicated in Table 2 – Composite Reject Water Quality Values for Colorado River Water and State Project Water and Table 3 – Filtrate Water Quality Requirements. Testing will be completed on raw water feeds of Colorado River Water and State Project Water.

D. Membrane filtrate generated during all testing shall be wasted in accordance with the District's requirements and local regulations. The location for wasted membrane filtrate shall be defined by the District prior to testing.

E. The Construction Contractor shall observe the requirements of the MFSS Operation and Maintenance Manual and the District's Plant Safety and OSHA rules at all times.

F. For all tests, sound pressure levels shall be measured for each piece of equipment in operation to confirm the specified maximums are not exceeded.

G. Testing of the membrane system shall not proceed without approval from the Engineer of the Startup and Testing Plan.

H. In the event that pre-commissioning, Commissioning, Performance Testing or 90-Day Operational Period testing, or operation during the one (1) year warranty period disclose failure to meet the contract requirements, the MFSS and/or Construction Contractor shall furnish and install such new materials and equipment or parts as may be necessary to conform to specification requirements at no additional cost to the District.

4.4 TRAINING QUALIFICATIONS

A. Only those MFSS's or manufacturers' representatives receiving acceptance by the Engineer, shall act to fulfill the specified training services. Resumes shall be submitted to the Engineer in writing for acceptance a minimum of fourteen (14) calendar days prior to providing training services.

B. If MFSS's or manufacturers' representatives are found deficient in training or experience by the Engineer, the MFSS shall furnish alternative representatives after acceptance of resumes of proposed replacement representatives.

PART 5 -- COMMISSIONING AND TESTING – PRODUCTS

5.1 GENERAL

A. The MFSS shall provide all additional instruments including analyzers and meters, chemicals, and other supplies necessary for conducting the commissioning and ninety (90)-Day Operational tests.

PART 6 -- COMMISSIONING AND TESTING – EXECUTION

6.1 GENERAL

A. The MFSS shall observe the requirements of the Operation and Maintenance Manual and the Plant Safety and OSHA rules at all times.

B. For all tests, sound pressure levels shall be measured for each piece of equipment in operation to confirm the specified maximums are not exceeded (if required).

C. Testing of the membrane system shall not proceed without prior written approval from the MFSS Project Engineer of the proposed test procedures.

6.2 PRE-COMMISSIONING

A. Membrane System Pre-Commissioning Services:

1. The Construction Contractor shall conduct pre-commissioning testing in accordance with the approved Startup and Testing Plan.

2. The MFSS shall provide the services of competent and experienced personnel led by the MFSS Project Engineer, who have complete knowledge of proper installation, programming, operation and maintenance of the MF/UF membrane system equipment for the entire duration of the start-up and commissioning period.

3. The MFSS's service personnel will at a minimum:

a. Inspect the completed membrane system installation. Prior to performing the Commissioning Test, the Construction Contractor will correct any deficiencies (noted by the MFSS) in the installation of MFSS-furnished components.

b. Provide direction to the Construction Contractor during the Commissioning Test.

B. Testing Protocol:

1. The proposed testing protocol to be performed during the pre-commissioning period shall be submitted as part of the Startup and Testing Plan. The testing protocol shall include a test program for all individual components and devices. Testing protocol shall also include sample data collection sheets, schedule, tasks, etc.

2. During the pre-commissioning period, the MFSS shall be on-site to assist with completing the testing protocol tasks and to establish steady-state operation required for the Commissioning Test.

3. Representatives of the Construction Contractor and the Engineer will also be in attendance during the pre-commissioning period and Commissioning Test. Prior to performing the Commissioning Test, all components of the membrane system, including membrane modules, shall be flushed and operated as required by the MFSS.

C. Commissioning Test Prerequisites:

1. Prior to performing the Commissioning Test, the Construction Contractor shall perform optimization of any pretreatment and flow control process(es) upstream and downstream of the MF/UF membrane system.

2. The MFSS shall complete the following Commissioning Test prerequisite items prior to commencing the Commissioning Test:

a. Flushing, calibration and operation, as applicable, of all MF/UF membrane system components and subsystems before installation of the membranes. The MFSS shall certify that the system is ready for membrane loading.

b. Confirm that the Construction Contractor has satisfactorily completed installation of all MFSS-furnished components not otherwise specified to be installed by the MFSS. Confirm that proper flushing of these systems has occurred.

c. Installation and/or inspection of membrane modules: The location and serial number of each membrane module shall be provided using a Microsoft Excel spreadsheet. This information will be used to document Membrane Warranty replacement. Membrane module information shall be collated and submitted to the Engineer as part of the Commissioning Test Report. Additionally, membrane module information shall be provided in a “map membrane” that visually shows where all modules are located in the system by number and spatial location.

d. Inline flow instruments, which are factory calibrated and supplied with the factory calibration certification, do not require additional field calibration. The MFSS shall calibrate pressure, temperature, level, and analyzer transmitters to appropriate standards of National Institute of Standards and Technology (NIST). The MFSS shall furnish calibration reports to the Engineer.

1) Calibration reports shall be submitted to the Engineer as part of the Commissioning Test Report.

2) The District and Engineer may be present to observe the MFSS’s calibration work

e. Installation and testing of all required software.

f. Operation and optimization of the MF/UF membrane system.

g. Confirm all alarm conditions are verified to be working properly.

h. Perform a Membrane Integrity Test (MIT) on all of the trains before the start of, and at the end of, the Commissioning Test in accordance with the MFSS's instructions and procedures. Submit MIT results certifying each skid/cell has passed the MIT as part of the Commissioning Test Report.

1) All individual fibers identified as failing to meet MIT requirements shall be repaired or isolated prior to initiating the Commissioning Test. If for a single membrane module more than 0.50 percent (one-half of one percent) of the fibers have required repair prior to or over the Commissioning Test period, then that module shall be considered to be defective and replaced prior to acceptance of the Commissioning Test.

i. If required by the MFSS, the membrane modules shall be chemically cleaned with acid or other chemicals prior to initiation of the Commissioning Test.

j. Notify the Engineer, in writing, that all of the Commissioning Test prerequisites are complete.

k. Arrange a mutually agreeable date to begin the Commissioning Test with the Engineer.

l. Arrange for sufficient MFSS personnel to be at the site to adjust and calibrate all MF/UF membrane system components as needed during the Commissioning Test.

D. COMMISSIONING TEST:

1. **Duration of Commissioning Test**: The MF/UF membrane system shall be started-up and operated for 7 consecutive days (168 hours) at design conditions.

2. **Commissioning Test Conditions**: The MF/UF membrane system shall be tested under the following conditions. These conditions must be maintained during the entire performance test.

a. Filtrate Flow:

1) Second Stage: 1.0 MGD

b. Recovery:

1) Second Stage: 85%

c. Membrane feed water quality shall be as listed in Table 2.

3. Commissioning Test Elements:

a. The Construction Contractor shall operate pre-and post-treatment processes (as applicable) to operate the MF/UF membrane system at the designated flow rate. The Construction Contractor shall determine the appropriate plan for testing all skids/cells with respect to water availability and include this proposal in the Startup and Testing Plan.

b. The Engineer and MFSS will perform tests to confirm all equipment shown on the MFSS's P&ID and electrical drawings is functioning properly and continuously during the Commissioning Test. The MFSS shall be on site during the commissioning test period to assist the Construction Contractor to complete the testing.

c. The purpose of these tests is to verify that both the MF/UF membrane system and each membrane unit are:

    1) Properly installed

    2) Operational

    3) Capable of completing an operating cycle free of problems. An operating cycle is defined as the completion of a run cycle, CIP, backwash, neutralization and any additional operating cycles as defined in the MFSS bid.

    4) Free from pump or valve cavitation, overheating, overloading, vibration, or other operating problems.

d. During the Commissioning Test, the lowest observed ten (10) minute average clean-membrane permeability will be recorded for each train. This observed value will be the benchmark to determine whether future operational permeability (corrected for temperature to 20° Celsius) are within the specified allowance. Permeability will be adjusted based on the following formula:

$$\text{Permeability}_{20^\circ C} = \text{Permeability Observed} * e^{(-0.0239*(T\text{Observed}-20))}$$

e. The Guaranteed Maximum Operating Clean-Membrane TMP shall be documented.

f. The MF/UF membrane system shall continuously produce filtrate that meets the requirements of Table 3 - Filtrate Water Quality Requirements.

g. The MF/UF membrane system shall satisfactorily pass all integrity tests.

h. All components and support systems of the MF/UF membrane system shall continuously function as required.

i. If the feedwater temperature changes over the period of the Commissioning Test to such an extent to cause a change in the operating condition, the MF/UF membrane system performance requirements will be changed to reflect the appropriate new operating condition.

j. Membrane System shall continuously produce filtrate that meets the production requirements at the design flux for the appropriate operating condition.

k. All individual fibers identified as failing to meet MIT requirements have been repaired (i.e., by pinning or gluing) prior to acceptance of the Commissioning Test. If for a single membrane module more than one-half of one percent (0.50%) of the fibers have required repair over the Commissioning Test period, then that module shall be considered to be defective and replaced prior to acceptance of the Commissioning Test.

E. Commissioning Test Termination:

1. The Commissioning Test will be terminated and repeated in its entirety at no additional cost to the District if:

a. The MF/UF membrane system does not meet performance requirements.

b. Any of the MF/UF membrane system equipment malfunctions.

2. If the feedwater temperature changes over the period of the Commissioning Test to such an extent to cause a change in the Operating Condition, the MF/UF membrane system performance requirements may be changed to reflect the appropriate new Operating Condition based on an evaluation by the Engineer as long as the temperature remain in the range of typical operation parameters.

3. Commissioning Test terminations due to malfunctions in MFSS-furnished equipment or other issues directly related to the furnished MF/UF membrane system shall necessitate a complete repeat of the Commissioning Test at no additional expense to the District.

4. One repeat of the Commissioning Test shall be performed at no additional expense to the District if the Commissioning Test is terminated for one or more of the following reasons:

a. Malfunctions in District-furnished equipment required for the satisfactory operation of the MF/UF membrane system.

b. District orders the test terminated for reasons of its own convenience.

c. District cannot provide the necessary quantity and/or quality of feedwater to the MF/UF membrane system.

d. District cannot provide the necessary electric power to the MF/UF membrane system.

5. If additional repeats of the Commissioning Test are required to be performed for any of the reasons listed in Item 4 above, the cost of the additional tests will be paid by District.

6. If additional repeats of the Commissioning Test are required to be performed for any reason other than those listed above, the cost will be paid for by the MFSS.

F. Data Collection During Commissioning Test

1. Data collection during the Commissioning Test shall meet the requirements of Section 01660 – Startup, Commissioning and Training and the approved Startup and Testing Plan.

G. **Test Report**: In accordance with the requirements of this Section, Section 01660 – Startup, Commissioning and Training and the approved Startup and Testing Plan, the Construction Contractor shall submit five (5) copies of a "Commissioning Test Report" to the Engineer documenting the results of the Commissioning Test. The proposed format for this report shall be submitted prior to testing in accordance with Paragraph 1.3 of this Section. If requested by the Engineer, the MFSS shall modify the form of the report, accordingly. The MFSS shall submit the completed "Commissioning Test Report" within seven (7) calendar days after satisfactory completion of the Commissioning Test. Report shall contain detailed test plans and results for all activities performed during testing. Results from all testing shall be tabulated and graphed as appropriate. Analysis of testing, along with conclusions and recommendations, shall be presented in the test report. The results of all laboratory analyses shall be bound into the report as appendices.

1. Concurrently with the preparation of the Commissioning Test Report, the Engineer will conduct a parallel review of the data regarding the acceptability of the findings, and determine deficiencies identified by the testing program. If required by the Engineer due to apparent deficiencies, the Construction Contractor shall repeat the Commissioning Test at no additional cost to the District.

H. **Commissioning Test Completion**: Successful completion of Commissioning Test is defined as the review and acceptance of the Commissioning Test Report by the Engineer.

6.3 NINETY (90)-DAY OPERATIONAL PERIOD TEST

A. Notice to Proceed with the ninety (90)-Day Operational Period shall be issued at the completion of Commissioning testing.

B. Construction Contractor shall be responsible for operating and maintaining the membrane system throughout the ninety (90)-Day Operational Period.

C. Construction Contractor shall monitor power and chemical usage and provide an analysis of the data to determine if the guaranteed power and chemical consumption has been met or exceeded. The data shall be included in the Commissioning Test Report Supplement.

D. The MFSS on-site staffing of the facility shall include, as a minimum, one person eight (8) hours per day, one (1) day per week during the ninety (90)-Day Operational Period. Additional staffing shall immediately be provided if needed to maintain operational performance and system maintenance.

E. The MFSS shall evaluate the MF/UF membrane system for operational issues and compliance with performance criteria. The MFSS shall download and review operational data at least once per week. The downloaded data shall be included in the Commissioning Test Report Supplement.

F. A minimum of two (2) Clean-in-Place (CIP) operations shall be performed during the ninety (90)-Day Operational Period and shall incorporate hands on training of District's personnel.

G. If operation of the membrane system is halted for any period of time due to malfunctions in MF/UF membrane system equipment or other issues directly related to the furnished MF/UF membrane system, including failure to maintain the performance of the system to meet performance criteria, the ninety (90)-Day Operational Period shall restart at no additional cost to the District.

H. Data Collection During 90-Day Operational Period

1. Data collection during the ninety (90)-Day Operational Period shall meet the requirements of Section 01660 – Startup, Commissioning and Training and the approved Startup and Testing Plan.

I. **Test Reports**: Five (5) copies of supplements to the Commissioning Test Report shall be submitted to the Engineer within seven (7) calendar days after completion of the ninety (90)-Day Operational Period. Supplements shall document all activities during the operational period and performance testing, test results, analysis of testing, and conclusions and recommendations. Formatting shall be similar to that of the original Commissioning Test Report.

J. **Acceptance:** Successful completion of Ninety (90)-Day Operational Period is defined as:

1. Ninety (90) days of continuous operation following Notice to Proceed meeting all operating performance requirements,

2. Completion of MF/UF membrane system training, and

3. Review and acceptance of the Commissioning Test Report Supplement.

6.4 DATA COLLECTION AND REPORTING

A. Data collection during the Commissioning Test shall be performed by the MFSS. Documentation shall be on MFSS provided calibration and data sheets.

B. Data collection during the ninety (90)-Day Operational Period shall be recorded in the MFSS's PLC and plant SCADA system, or completed manually by MFSS in the event that recording by the PLC or SCADA system is not feasible. The District shall either perform or pay for any analytical tests required during the Operational Period test.

C. The performance of the membrane system during all testing will be measured as specified for the Commissioning Test and meet requirements as specified herein.

1. All MF/UF membrane system instrumentation shall be calibrated and documented as such prior to the beginning of Commissioning testing, and calibration shall be verified prior to the beginning of the the ninety (90)-Day Operational Period. Calibration and re-calibration shall be in accordance with the procedures and frequency supplied by the equipment manufacturer. Documentation shall be on MFSS-furnished calibration sheets.

2. The operational parameters measured and recorded in the plant SCADA for the MF/UF membrane system shall be measured and recorded on the frequency specified by the MFSS. The MFSS shall submit a list, in writing, of the parameters to be measured and recorded in the Startup and Testing Plan. The list shall include at a minimum:

    a. Feed water temperature

    b. Feed water flow rate

    c. Feed water pressure

    d. Feed water turbidity

    e. TMP

    f. Filtrate pH

    g. Filtrate flow rate

    h. Filtrate pressure

    i. Filtrate turbidity

    j. Backwash water flow rate

    k. Recovery

    l. Particle log removal through membrane system (by calculations via MFSS's PLC program)

3. The MFSS shall select the following set points, alarms, etc. to be entered into the MFSS's PLC program and plant SCADA system, at a minimum. Once selected, the values shall not be modified for the duration of Commissioning testing and the Operational Period testing. The selected set points, alarms, etc. shall be included in the Commissioning Test Report and Commissioning Test Report Supplement.

    a. Backwash frequency

    b. Backwash duration

    c. Backwash rest period

d. Filtrate flow rate

e. TMP

f. Number of membrane elements on-line

g. Number of skids/cells on-line

h. Operational recovery

4. The following water quality parameters shall be measured on the feed water supply common to all membrane units, combined filtrate flow from all membrane units, and the reject flow from each individual membrane unit. Samples shall be taken one hour following the start of the Commissioning Test and daily thereafter throughout the Commissioning Test period, unless agreed upon otherwise by the Engineer. The District shall either perform or pay for analytical tests required to monitor the following water quality parameters. Water quality results shall be included in the Commissioning Test Report Supplement.

   a. pH

   b. Temperature

   c. Calcium, mg/L

   d. Total Hardness, mg/L as $CaCO_3$

   e. Alkalinity, mg/L as $CaCO_3$

   f. Turbidity, NTU

   g. Total Iron, mg/L

   h. Total Manganese, mg/L

   i. Total Dissolved Solids, mg/L

   j. Total Suspended Solids, mg/L

   k. Total Organic Carbon, mg/L

   l. Silica, mg/L

6.5 ACCEPTANCE

A. The OWNER shall provide the MFSS and the Construction Contractor with a letter of "Satisfactory Completion of Commissioning Test" upon completion of:

   1. Review and acceptance of the Commissioning Test Report.

B. The OWNER shall provide the MSS and the Construction Contractor with a letter of "Satisfactory Completion of Ninety (90) Day Operational Period" upon completion of:

1. Ninety (90) days of continuous operation following Notice to Proceed with Ninety (90) Day Operational Period.

2. Training requirements.

3. Review and acceptance of the Commissioning Test Report supplement.

6.6 ONE-YEAR WARRANTY PERFORMANCE TEST

A. A one (1)-year warranty performance test shall be performed as described in Section Supplemental Special Requirements, Paragraph SSR-19.

PART 7 -- MEMBRANE SYSTEM TRAINING

7.1 The Construction Contractor shall furnish the services of qualified MFSS personnel for up to five (5) Instructor-days at the site to instruct the District's personnel on proper operation, installation, sampling, cleaning, and maintenance for the membrane system. One day shall be scheduled to coincide with a CIP.

A. The training program shall cover the contents of the Operation and Maintenance Technical manual prepared and furnished by the Construction Contractor for the MF/UF membrane system. The training shall also cover general theory, systems operation, data collection, data interpretation, automatic and manual operations, control strategies, safety, and maintenance of the complete system. Training of the MF/UF membrane control system shall cover the specific PLC and graphic interface configuration provided for this project. The training shall also include data communications configuration specific to this project, the PLC program code and graphic interface object and maintenance/future programming options.

PART 8 -- PERFORMANCE SUPPORT AND MAINTENANCE CONTRACTS / AGREEMENTS

8.1 GENERAL REQUIREMENTS

A. The MFSS is required to have competent local representation to be able to attend to requirements onsite.

B. The Performance Support Contract/Agreement shall consist of the following items:

1. System Performance Warranty and PLC Software Warranty.

2. Process support: Process performance shall be monitored through on-site monitoring and analysis of the plant data and via periodic communication with the operators.

3. All plant data for monitoring and analysis is to be retrieved on-site. Transmission of data offsite via communications networks will not be permitted.

4. Monthly operating reports shall be generated which include trending graphs, tabular summaries of results, and an assessment of the cleaning needs of the plant.

5. Establish the frequency and concentrations of the cleaning required.

6. Establish and monitor all set points required for the process.

7. Replace or add membrane modules to meet performance requirements.

8. The MFSS shall make necessary changes and implement upgrades to the PLC software relating to providing solutions to all membrane system programming defects or deficiencies encountered during operation of the membrane system for the operation of the MFSS's systems only.

C. The Scheduled Maintenance Contract/Agreement shall consist of the following items:

1. Quarterly membrane fiber repair.

2. Monthly evaluation of MF/UF membrane system major equipment for purposes of identifying equipment that is broken, not operating correctly, or in need of preventative maintenance. Recommendation of maintenance or replacement of necessary equipment. Implementation of the recommended maintenance within two (2) weeks of recommendation.

3. Weekly evaluation of MF/UF membrane system for purposes of identifying items that are broken, not operating correctly, or in need of preventative maintenance. Examples of such items include replacement of pump oil, valve maintenance, etc. Recommendation of maintenance or replacement of necessary equipment. Implementation of the recommended maintenance/replacement within one (1) week of recommendation.

D. The Annual Plant Evaluation Agreement shall consist of the following items:

1. Provide an annual plant service checkout, to consist of no less than three (3) days in duration.

2. Perform routine membrane maintenance as required for proper operation, to include membrane fiber repair.

3. Issue report with recommendations for maintenance or replacement of MF/UF system equipment. Perform maintenance and replacement of equipment or provide costs for additional services, where services are not included for in existing contract.

END OF SECTION

[PAGE LEFT INTENTIONALLY BLANK]

Appendix C - Seller's Warranty - ZeeWeed® Membrane Modules Prorated Replacement

This schedule sets out the warranty with respect to ZeeWeed® Membrane Modules ("Membrane Modules"). No other warranties, expressed or implied are made in connection with the sale of these products, including, without limitation, warranties as to fitness for any particular purpose or use or merchantability of these products. The warranty provided herein will be the exclusive and sole remedy of the Buyer, and in no event will the Seller be liable for any special, direct, indirect or consequential damages, including, without limitation, loss of profits. This warranty is not transferable.

1 Product

This warranty applies to only the Membrane Modules supplied under the Contract of Sale. Membrane Module means a complete Membrane Module. This warranty does not cover air piping to the Membrane Module, permeate piping from the Membrane Module, piping connection fittings, connecting hardware and cassette frames with their associated components including but not limited to spacers, aerator tubes, aerator assemblies, screen, module dummies or module blanks.

Identification: Membrane Modules are shipped by the Seller with a serial number identification which confirms their place in the cohort set of Membrane Modules covered by this Membrane Module warranty.

2 Seller

ZENON Environmental Corporation is the name of the Seller and is the Seller offering this warranty. The Seller may assign this warranty to other GE affiliates.

3 Buyer

Buyer means **EMWD Construction Contractor.**

4 Project

Project means **Eastern Municipal Water District (EMWD) PWFP Reject Recovery Facility Contract of Sale.**

Contract of Sale means the sales contract governing the sale of Membrane Module(s) between the Buyer and the Seller or its GE affiliate.

5 Scope of Warranty

The Seller warrants that its Membrane Module(s) will be free of defects due to faulty materials or errors in manufacturing workmanship.

Regular Membrane Module inspection and normal fiber repair shall be the responsibility of the Buyer.

All replacement Membrane Modules will be shipped in accordance with Section SSR-19, Item E4 & 5..

During the Prorated Warranty Period all ancillary costs including but not limited to bagging, boxing, crating, freight, freight insurance, applicable taxes, import duties, brokerage, receiving, forklift services, storage at site, re-attachment hardware, hose/clamp/camlock replacement, crane services, installation, fiber repair materials, glycerin flushing, commissioning and waste disposal are the responsibility of the Buyer, as applicable per SSR-19, Item E4 & 5.

Full Replacement – Full Replacement means that in the case of a valid warranty claim for a Membrane Module failure, the Buyer receives a replacement Membrane Module and does not pay for the value of use of the Membrane Module prior to failure.

Prorated Replacement – Prorated Replacement means the Buyer pays for actual use of a membrane module from which the Buyer has derived value over time. See Section 11 Membrane Module Replacement Price – Prorated Replacement for

the formula for calculating the prorated amount payable. Prorated Replacement allows the Seller to pay reasonable compensation under warranty for any product use not enjoyed by the Buyer due to premature failure.

The ratio of Full Replacement to Prorated Replacement in this Warranty is set out in Section 7 Warranty Duration.

6 Warranty Start Date

This warranty will start on the earlier of:

a) The date that installation of the original Membrane Module(s) has been substantially completed, or

b) Six months from the date of shipment of the original Membrane Module(s) to the Buyer.

7 Warranty Duration

Total Warranty Duration: a total of **Eighty-four (84) Months** composed of a Base Period and an Extended Period.

Base Period with Full Replacement: **Twenty-Four (24) Months**

All purchasers of ZeeWeed Membrane Modules are entitled to this Base Period of Full Replacement warranty coverage without purchasing an extended Seller's Warranty.

Extended Period with Prorated Replacement: a total of **Sixty (60) Months** following the Base Period

Replacement Membrane Modules are covered by warranty only for the balance of the warranty of the original Membrane Module which has been replaced. At all events, this warranty shall expire and be of no force or effect **Eighty-four (84) Months** following the Warranty Start Date.

8 Notification of Claim

All claims filed under this warranty shall be made in writing by the Buyer within 30 days of identifying a defect.

The Buyer shall provide the following information:

1) A description of the defect giving rise to the claim;
2) Photographs showing the manufacturing defect;
3) The serial number(s) of the Membrane Module(s) which is (are) the subject of the warranty claim; and
4) Operating data and repair history for the life of Membrane Modules which are the subject of a warranty claim.

9 Verification of Claim

After receipt of written notification of a defect, the Seller will promptly undertake such investigations as, in the Seller's opinion, are necessary to verify whether a defect exists. The Seller reserves the right to require additional data as necessary to validate claims. The Buyer may, in the course of these investigations, be requested to return Membrane Module(s) to the Seller for examination. The Seller may also conduct reasonable tests and inspections at the Buyer's plant or premises. If the results of the investigation do not validate the defect claimed, the Buyer will reimburse the Seller for all reasonable expenses associated with said investigation, including expenses for all tests, inspections, and associated travel.

10 Satisfaction of Claims

The Seller will have the right to satisfy claims under this warranty in a flexible manner. Such flexibility may include the repair of existing Membrane Modules or changes in operating protocols or Membrane Module replacement or by upgrading failed Membrane Modules with newer Membrane Module(s) that may embody design and efficiency improvements. The Buyer consents to the supply of replacement Membrane Modules which may be of a different design than original Membrane Modules.

11 Membrane Module Replacement Price – Prorated Replacement

The base Membrane Module Replacement Price (MMRP) used to calculate the prorated amount to be paid by the Buyer to replace defective Membrane Modules under warranty shall be **USD$ 1,027.00** + adjustment for inflation. The inflation adjustment will be calculated according to changes in the Consumer Price Index, US City Average, All Urban Consumers,

All Items less Food and Energy, as published by the US Bureau of Labor Statistics for the period from March, 2012 through to the latest available CPI Index report.

For Membrane Modules supplied under valid warranty claims, the prorated share that the Buyer will pay is calculated as follows:

$$\text{Prorated Share of Price} = \frac{\text{Number of whole months elapsed between the Membrane Module Replacement Date \& the Warranty Start Date}}{\text{Warranty Duration in Months}} \times \text{Membrane Module Replacement Price} \times \text{Changes in CPI Index}$$

Note - This Membrane Module Replacement Price (MMRP) is not applicable for Membrane Modules requested for purchase by Buyer for any non-warranty or other purposes, including but not limited to flux reduction, or plant hydraulic capacity increases. Modules purchased under these or other scenarios will be sold to Buyer by Seller at the list price in effect at the time of order.

12 Operating Information

To maintain the Membrane Module warranty, membrane system operation records from initial start-up date until claim must be maintained by the Buyer and made available to the Seller upon request. Records must be provided in sufficient detail to verify uninterrupted compliance with the Seller's Operations and Maintenance Manual prepared by the Seller and supplied to the Buyer as part of the Contract. At a minimum, operation data must include information on feedwater quality, temperatures, flows, trans-membrane pressures, aeration rates, permeate quality, cleaning intervals, cleaning chemical concentrations, elapsed time since start-up, relevant analytical data and reporting of any screen bypass events.

The Buyer shall maintain and share access to a single reference copy in electronic form of a Membrane Module map containing the history of activity by Membrane Module. The Buyer shall log its procedures performed related to a Membrane Module including relocation of Membrane Modules, repairs, replacements and any other noteworthy events.

The Buyer authorizes the Seller to conduct any reasonable review of operation and maintenance records or to inspect facilities where Membrane Modules are installed, upon reasonable notice to the Buyer. Such reviews and/or inspections are intended to also assist the Seller and the Buyer in detection of membrane system faults and to optimize the care and operation of the Membrane Modules.

13 Limitation of Warranties

Occurrence of any of the following as reasonably determined by the Seller will void this warranty:

a. A material failure to operate the membrane system in accordance with Seller's Operations and Maintenance Manual supplied to the Buyer as part of the Contract, including material failure to adhere to the Seller's specified Membrane Module cleaning procedures and the use of anything other than Seller-approved Membrane Module cleaning agents.

b. Failure to adhere to the preventive maintenance program as presented in the Seller's Operations and Maintenance Manual.

c. Failure to ensure correct operation and/or functioning of the screening equipment.

d. Introduction of destructive foreign materials into the Membrane Module tanks. Destructive foreign materials may include natural or man-made materials that are introduced into the membrane system influent channel or tanks originating from construction and maintenance activities or from inadequate pretreatment or from aquatic species including clams and snails or from damage to the tank or tank coating. Sand and other materials that are naturally present in the influent will not be considered destructive foreign materials. The Buyer shall be responsible to maintain correct function of the screen mechanism and to flush tanks of accumulated sand at the tank bottom.

e. Failure to install and maintain operating data acquisition and electronic data transmission functions at the plant.

f. Physical abuse or misuse, incorrect removal or installation of Membrane Modules by non-Seller personnel including fiber damage caused by operator error in handling of Membrane Modules or cassettes.

g. Unauthorized alteration of any components or parts originally supplied by the Seller.

h. Intentional damage.

14 Return Procedure

In the event that the return of a Membrane Module is required pursuant to this warranty, the Buyer will first obtain a Return Goods Authorization (RGA) number from the Seller. Membrane Module(s) shipped to the Seller for warranty examination must be shipped freight prepaid. If the Buyer desires temporary replacement Membrane Module(s) to replace those alleged to be defective and returned to the Seller for warranty examination, the Buyer shall be responsible for the cost associated with any such replacements until examination of the returned Membrane Modules pursuant to this warranty is complete. Any Membrane Module examined by Seller as part of a warranty claim where the Membrane Module is subsequently found to be performing as warranted or where a Membrane Module failure is not covered under the warranty will be returned to the Buyer, freight collect. In the event membrane modules are determined to be defective, seller will reimburse buyer the full cost packaging, shipping, handling, insurance etc.

Appendix D – Bidding Sheets

[Page Left Intentionally Blank]

Table 1: Economic Assumptions

Variable	Variable Name	Input Value	Units
Filtrate Flow Rate	JJ	1.0	mgd
Recovery	KK	85	%
Temperature	LL	25	C
Capitalization Period	MM	10	Years
Membrane Life	NN	7	Years
Power Annual Percent Increase		4	%/annum
Present Worth Factor (Power)	OO	8.1109	
Chemical Annual Percent Increase		2	%/annum
Present Worth Factor (Chemical)	PP	8.9826	
Power Cost	QQ	0.12	$/kW-hrs
Wire to Water Pump Efficiency	RR	70	%
Chemical Cost			
Sodium Hypochlorie	AA	0.9	$/lb Cl
Citric Acid	BB	1.15	$/lb Citric
Sulfuric Acid	CC	0.58	$/lb H_2SO4
Caustic Soda	EE	0.28	$/lb NaOH
Sodium Bisulfite	FF	0.46	$/lb Bisulfite

Table 2: Cost Variables

Membrane System Capital Cost				
Variable Name	**Quantity**	**Unit Cost $**	**Total Cost $**	**Variable Description and Units of Measure**
A				Feed Pumps ($)
B				Second Stage Membrane System ($)
~~C~~				~~Third Stage Membrane System ($)~~
D				Backwash Equipment ($)
E				Blowers and air compressors ($)
F				CIP System ($)
G				Other ancillaries (indicate type) ($)
TMS				Total Membrane System ($) = A + B + D + E + F + G Scope of supply as described in the contract documents.
H				Present Value of District's share of 7 Year Extended Membrane Module Warranty ($) (from Table 7). In the event of a discrepancy with Table 8, the results of calculations in Table 8 shall prevail.
I				Number of Skids per Train
J				Number of Modules per Skid
K				Baseline Membrane Module Purchase Price (BMMPP).
Power Cost Variables				
	43, 700	0.12	5244	Permeate Pumps
P1	6.6			Feed water pressure (feet)
P2	27.7			Max TMP (feet)
P3	7.9			Discharge water pressure residual (feet) – See Note 1
P4				Dynamic Losses in Membrane Suppliers Equipment and Inherent Pipework (feet).
L	1, 363	0.12	164	Backwash System – Estimated Annual Electrical Load (kW-hrs per Year) (calculated in Table 6)
M	171, 635	0.12	20596	Blower System – Estimated Annual Electrical Load (kW-hrs per Year) (calculated in Table 6)
O	485	0.12	58	CIP Pumps – Estimated Annual Electrical Load (kW-hrs per Year) (calculated in Table 6)
P	104, 560	0.12	12547	Baseline/Additional Power Requirements – Estimated Annual Electrical Load (kW-hrs per Year) (calculated in Table 6)

Note 1: Remaining pressure based on the agreed upon TDH values, as included in the contractor bid package.

Table 3: Performance and Maintenance Contract Costs

Membrane System Performance and Maintenance Cost						
Variable Name	**Year 1 $**	**Year 2 $**	**Year 3 $**	**Year 4 $**	**Year 5 $**	**Variable Description and Units of Measure**
A	$14,710	$7,720	$7,720	$7,720	$7,720	Performance Support Contract ($)
B						Scheduled Maintenance Contract ($)
C						Annual Plant Evaluation ($)

MFSS to complete the information requested in Tables 4 and 5 regarding the chemical washing and chemical cleaning of the membrane filtration equipment. The value placed in the table, where appropriate, represents the annual average value based on the design requirements listed in Section 11400. MFSS to indicate type of chemical required.

Table 4: Chemical Washing Information

	Units		Chemical 1	Chemical 2	Chemical 3	Chemical 4
General Washing Information – Maintenance Cleaning						
Chemical Wash Interval	Days		6/week	1/week		
Total time each Membrane Skid is offline per Chemical Wash	Min		58	58		
Chemical Wash Online Factor	%		96%	96%		
Number of Chemical Washes per year	#		312	52		
Volume of Filtrate Chemical Solution Make-up per Wash per Skid	Gal		6556	6556		
Volume of Filtrate for rinsing per Wash per Skid	Gal		203	203		
Total Volume of Filtrate per Skid per Chemical Wash	Gal		6759	6759		
Volume of Feedwater per Skid per Chemical Wash	Gal		6556	6556		
Total Volume of Waste Solution per Skid per Chemical Wash	Gal		13315	13315		
Total Volume of Filtrate required for Chemical Washing	Gal	per year	4247558	707926		
Total Volume of Feedwater lost during Chemical Washing	Gal	per year	4083975	680663		
Total Volume of Wastewater generated during Chemical Washing	Gal	per year	8331533	1388589		
Chemical Wash Chemical						
Chemical Name			NaOCl	Citric Acid		
Associated Chemical Unit Cost	$/lb	From Table 1	0.9	1.15		
Molecular Weight	g/mol					
Percentage of all Chemical Washes using this chemical	%		86	14		
Concentration for Chemical Washing	mg/L		100	2500		
Concentration as Delivered (100% if solid used)	% (w/w)		10.3	50		
Specific Gravity as delivered solution	-		1.168	1.240		
Quantity of chemical required per Chemical Wash per Skid	Lbs		5.5	137		
Percentage of Active Chemical consumed by the Chemical Wash	%		--	--		
Neutralization Chemical						
Chemical Name			NaHSO3	NaOH		
Associated Chemical Unit Cost	$/lb	From Table 1	0.46	0.28		
Molecular Weight	g/mol		--	--		
Molar Ratio of Neutralization			1.47	0.625		
Concentration as Delivered (100% if solid used)	% (w/w)		35	50		
Specific Gravity as delivered solution	-		1.29	1.52		
Quantity of Neut Chemical required to neutralize Waste Chem from Chemically Washing 1 Skid	Lbs		5.7	59.8		

Note 1: Chemical washing includes Chemically Enhanced Backwash and Enhanced Flux Maintenance and Maintenance Clean/Wash.

Table 5: Chemical Cleaning Information

	Units		Chemical 1	Chemical 2	Chemical 3	Chemical 4
General Cleaning Information – Recovery Clean						
Chemical Clean Interval	Days		1/month	1/month		
Total time each Membrane Skid is offline per Chemical Clean	Min		359	359		
Chemical Clean Online Factor	%		--	--		
Number of Chemical Cleanings per year	#		12	12		
Volume of Filtrate Chemical Solution Make-up per Clean per Skid	Gal		6556	6556		
Volume of Filtrate for rinsing per Clean per Skid	Gal		203	203		
Total Volume of Filtrate per Skid per Chemical Clean	Gal		6759	6759		
Volume of Feedwater per Skid per Chemical Clean	Gal		6556	6556		
Total Volume of Waste Solution per Skid per Chemical Clean	Gal		13315	13315		
Total Volume of Filtrate required for Chemical Cleaning	Gal	per year	162112	162112		
Total Volume of Feedwater lost during Chemical Cleaning	Gal	per year	157235	157235		
Total Volume of Wastewater generated during Chemical Cleaning	Gal	per year	319347	319347		
Chemical Clean Chemical						
Chemical Name			NaOCl	Citric Acid		
Associated Chemical Unit Cost	$/lb	From Table 1	0.9	1.15		
Molecular Weight	g/mol		--	--		
Percentage of all Chemical Cleanings using this chemical	%		86	14		
Concentration for Chemical Cleaning	mg/L		500	2500		
Concentration as Delivered (100% if solid used)	% (w/w)		10.3	50		
Specific Gravity as delivered solution	-		1.168	1.240		
Quantity of chemical required per Chemical Clean per Skid	Lbs		27.4	137		
Percentage of Active Chemical consumed by the Chemical Clean	%		--	--		
Neutralization Chemical						
Chemical Name			NaHSO3	NaOH		
Associated Chemical Unit Cost	$/lb	From Table 1	0.46	0.28		
Molecular Weight	g/mol		--	--		
Molar Ratio of Neutralization			1.47	0.625		
Concentration as Delivered (100% if solid used)	% (w/w)		35	50		
Specific Gravity as delivered solution	-		1.29	1.52		
Quantity of Neut Chemical required to neutralize Waste Chem from Chemically Cleaning 1 Skid	Lbs		28.5	59.8		

Note 1: Chemical cleaning includes Cleaning-in-Place.

Table 6: Power Consumption

	Equipment	Flow	Pressure (feet)	HP	kW[1]	Total Units	Duty Units	Runtime		kW-hr/year
								per day	per year	
1	Permeate Pumps	407	21.4	20	3.2	2	2	90%	90%	43, 700
2	Backwash Pumps	668	21.9	20	4.6	2	2	4%	4%	1, 363
3	Blowers at standard ATM conditions	817	10.1	50	25.8	2	1	95%	95%	171, 635
4	CIP Pumps	437	10	2	1.5	2	1	4%	4%	485
	Baseline/Additional Power Requirements as listed below									
5	Second Stage Feed Pumps	464	17.4	6	3.6	2	2	94%	94%	28,869
6	Reject Pumps	57	34	1	0.7	2	2	90%	90%	9, 616
7	CIP Heater				128	1	1	3%	3%	36, 919
8	Compressor			5		1	2	--	--	3, 989
9										
10										

Note 1: Additional equipment on attached sheet as necessary to account for power usage.

Table 7: Present Value of Membrane Module Replacement ("H" in Table 2)

Year (n)	MMPP Escalation Factor[1]	Actual MMPP[2]	% Modules Replaced	# Modules Replaced[3]	Pro-rata Share[6]		District's Annual Cost[4]	Present Value (P/F, 4%, n)[5]
					MFSS, %	District, %		
1	1.020	$1,048	6	14	100	0	-	-
2	1.061	$1,090	13	31	100	0	-	-
3	1.103	$1,133	20	48	64	36	$19,574	$17,746
4	1.147	$1,178	23	55	50	50	$32,512	$28,342
5	1.193	$1,225	20	48	36	64	$37,638	$31,549
6	1.241	$1,275	12	29	21	79	$28,998	$23,271
7	1.291	$1,326	6	14	7	93	$17,756	$13,760
			100	240			$136,478	$114,768

Notes:

1 Based on Mid-Year, 4% annually
2 Actual MMPP = MMPP Escalation Factor * K, where "K" is from Table 2
3 # Modules Replaced = Total Number of Modules * % Modules Replaced,
Where Total Number of Modules = # of Trains * # Skids per Train (I) * # of Modules per Skid (J)
4 District's Annual Cost = Actual MMPP * # Modules Replaced * % District's Share (to be completed by District)
5 Present Value = District's Annual Cost / (1+0.04)^(Years – 0.5). Based on Mid-Year. (to be completed by District)
6 Based on Mid-Year

Table 8: Flux Table

	Design	Minimum	Maximum	Units
Net Flow	1.00	0.37	1.20[1]	MGD
Net Flux	12.3	3.0[2]	12.3	gfd
Instantaneous Flux[3]	14.4	4.0[2]	14.4	gfd

Notes:

1. Hydraulic capacity only; additional membranes are required to meet this flow.
2. Based on three (3) fully populated cassettes at the minimum capacity.
3. Based on the anticipated downtime and filtrate consumption for the membrane system. Variations from the anticipated values will result in variations in the instantaneous flux required to meet the capacity.