ID	ALG	STA	OFFSET	LT/RT	NORTHING	EASTING	SHEET S-2.2		
							A	B	C
FM-MC1-1	MC1	342+73.05	0	Rt	846226.37	622539.15	5'	2.71	6.46
FM-MC2-1	MC2	231+32.02	0	Rt	849243.99	612440.08	7'	1.96	6.71
FM-MC21N-1	MC2-1N	500+28.00	0	Rt	849119.29	611133.91	6'	1.14	5.39
FM-MC21N-2	MC2-1N	537+97.00	0	Rt	851483.40	609740.18	4'	2.99	6.24
FM-MC21S-1	MC2-1S	400+92.39	0	Rt	849027.06	611161.46	5'	2.28	6.03
FM-MC22N-1	MC2-2N	800+43.48	0	Rt	849287.70	612491.42	7'	1.11	5.86
FM-MC22N-2	MC2-2N	826+00.70	0	Rt	851782.75	612429.42	5'	2.9	6.65
FM-MC3-3	MC3	665+98.08	0	Rt	854506.52	608895.77	4'	2.95	6.2
FM-MC31N-3	MC3-1N	714+33.05	0	Rt	855807.62	611152.20	4'	2.46	5.71
FM-MC31N-4	MC3-1N	715+44.00	0	Rt	855918.57	611151.42	4'	1.74	4.99
FM-MC32N-1	MC3-2N	900+30.00	0	Rt	855787.54	611122.33	5'	2.35	6.1
FM-MC32N-2	MC3-2N	914+55.14	0	Rt	855824.84	609774.92	3'	2.13	4.88
FM-MC33N-1	MC3-3N	0+45.00	0	Rt	854550.72	608921.92	4'	2.92	6.17
TOFM-MC1-1	MC-1	309+83.49	45	Lt	843975.26	621023.43	5'	5.21	8.96
TOFM-MC1-2	MC-1	315+70.73	45	Lt	843974.46	621533.43	6'	9.87	14.12
TOFM-MC1-3	MC-1	342+32.063	45	Lt	846165.96	622531.37	6'	2.63	6.88
TOFM-MC2-1	MC-2	179+31.23	45	Lt	849273.51	617520.90	3'	6.08	8.83
TOFM-MC2-2	MC-2	196+71.25	35	Lt	849276.93	615900.91	4'	4.4	7.65
TOFM-MC2-3	MC-2	206+41.27	35	Lt	849279.06	614930.89	4'	5.29	8.54
TOFM-MC2-4	MC-2	219+41.27	35	Lt	849281.84	613630.90	4'	2.66	5.91
TOFM-MC2-5	MC-2	233+66.38	35	Lt	849087.90	612326.63	3'	2.63	5.38
TOFM-MC21N-1	MC-2-1N	536+90.74	35	Rt	851448.53	609787.27	3'	3.18	5.93
TOFM-MC21S-2	MC-2-1S	400+50.00	35	Rt	849069.63	611126.66	3'	0.1	2.85
TOFM-MC21S-3	MC-2-1S	400+40.00	NA	NA	849229.49	611154.45	3'	1.84	4.59
TOFM-MC22N-1	MC-2-2N	825+73.15	106	Rt	851888.75	612456.43	4'	1.43	4.68
TOFM-MC22N-2	MC-2-2N	0+00.00	0	Rt	851888.75	612526.43	4'	0.66	3.91
TOFM-MC22N-3	MC-2-2N	824+85.00	35	Lt	851729.21	612456.44	4'	2.63	5.88
TOFM-MC3-1	MC-3	604+00.00	35	Lt	854360.15	614947.53	3'	3.03	5.78
TOFM-MC3-2	MC-3	654+12.02	59	Lt	854320.25	609951.96	3'	3.92	6.67
TOFM-MC3-3	MC-3	655+66.24	35	Rt	854543.79	609927.53	3'	4.05	6.8
TOFM-MC3-4	MC-3	656+72.20	35	Rt	854543.54	609821.57	3'	2.84	5.59
TOFM-MC3-5	MC-3	674+35.90	35	Lt	854073.15	608454.02	3'	1.92	4.67
TOFM-MC3-6	MC-3	690+20.14	35	Lt	854347.48	607165.20	3'	2.06	4.81
TOFM-MC3-7	MC-3	690+20.14	35	Rt	854382.46	607130.18	3'	2.32	5.07
TOFM-MC31N-1	MC3-1N	707+00.00	35	Lt	855074.89	611109.89	3'	2.79	5.54
TOFM-MC31N-2	MC3-1N	715+00.03	35	Lt	855874.35	611116.73	3'	1.99	4.74
TOFM-MC32N-1	MC3-2N	913+24.34	59	Lt	855900.07	609892.09	3'	-0.22	2.53
TOFM-WSIF-1	WS-IF	127+91.27	35	Rt	844022.45	617524.15	3'	1.3	4.05
TOFM-WSIE-2	WS-IF	1015+25.00	35	Rt	845261.55	620206.35	3'	3.48	6.23
TOFM-WSIE-3	WS-IE	1028+00.00	35	Rt	846536.53	620212.96	3'	3.57	6.32
TOFM-WSIE-4	WS-IE	1041+50.00	35	Rt	847886.51	620219.94	3'	3.69	6.44
TOFM-WSIE-5	WS-IE	1056+45.96	35	Rt	849241.29	619898.43	3'	3.82	6.57
TOFM-WSIE-6	WS-IE	1093+35.00	35	Rt	852018.17	617497.67	3'	3.4	6.15
TOFM-WSIE-7	WS-IE	1121+86.52	35	Rt	854187.42	615646.54	3'	3.32	6.07
TOFM-WSIE-8	WS-IE	1130+97.05	35	Rt	854787.86	615123.88	3'	4.18	6.93
TOFM-WSIE-9	WS-IE	1153+97.05	35	Rt	856522.83	613625.51	3'	3.95	6.7
TOFM-WSIE-10	WS-IE	1171+97.05	35	Rt	857884.78	612448.61	3'	4.89	7.64
TOFM-WSIE-11	WS-IE	1194+19.09	35	Rt	859547.46	611018.56	3'	6.01	8.76
TOFM-WSIE-12	WS-IE	1206+47.05	35	Rt	859643.70	609798.93	3'	5.21	7.96
TOFM-WSIE-13	WS-IE	1219+47.05	35	Rt	859637.86	608498.36	3'	3.6	6.35
TOFM-WSIF-2	WS-IF	140+11.27	35	Rt	845242.45	617526.06	3'	1.48	4.23
TOFM-WSIF-3	WS-IF	146+41.27	35	Rt	845872.45	617526.95	3'	3.17	5.92
TOFM-WSIF-4	WS-IF	159+41.27	35	Rt	847172.35	617527.08	3'	3.87	6.62
TOFM-WSIF-5	WS-IF	165+86.27	35	Rt	847817.35	617526.29	3'	5.58	8.33
TOFM-WSIF-6	WS-IF	175+91.27	35	Rt	848822.51	617529.73	3'	5.67	8.42

Rev	Date	Description	By

Job No. 647979
Designed MFM
Drawn JD
Checked JZ
Reviewed JZ
Approved JZ
Reg. No. 25118
Plot Date 12-18-14

60% SUBMITTAL NOT FOR CONSTRUCTION

PREPARED BY:
PARSONS
222 SOUTH MILL AVENUE
SUITE #220
TEMPE, ARIZONA 85281
(602)852-9195
(602)952-9303 fax

PIMA MARICOPA IRRIGATION PROJECT
P.O. BOX C
192-A SOUTH ROUTE A STREET
SACATON, AZ 85147
(520)562-6700
(520)562-6791 FAX

REACHES WS-1E AND WS-1F

FLOW METER IN MANHOLE TABLE SHEET
SHEET 2 OF 2

DRAWING NAME
S-2.3

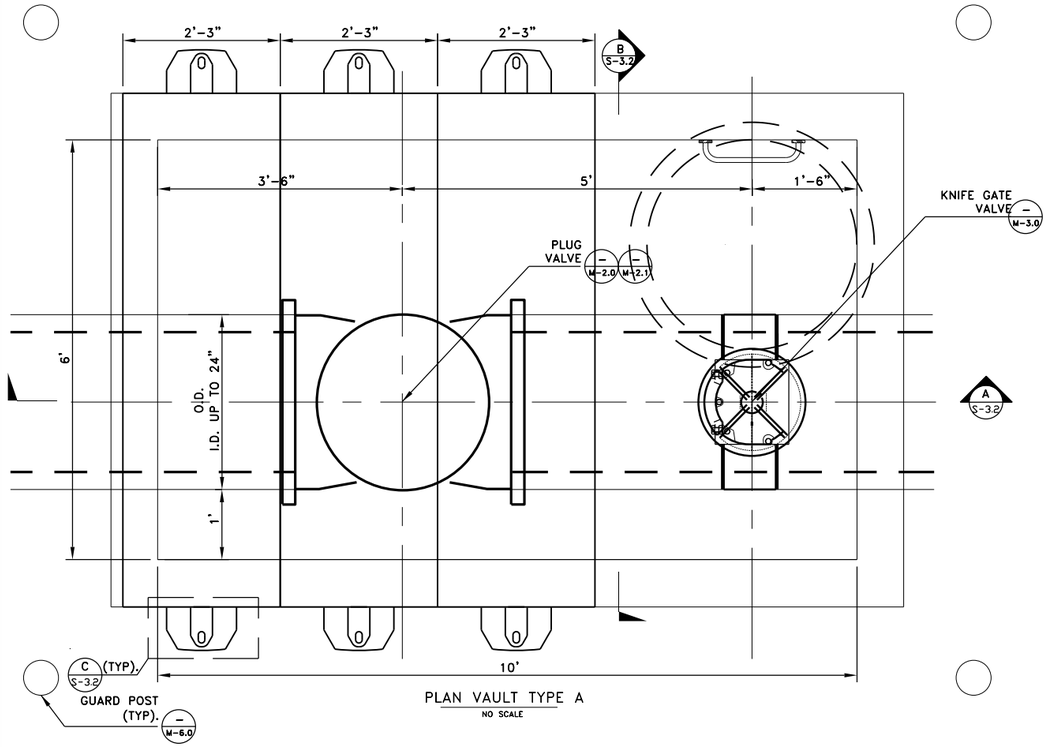

PLAN VAULT TYPE A
NO SCALE

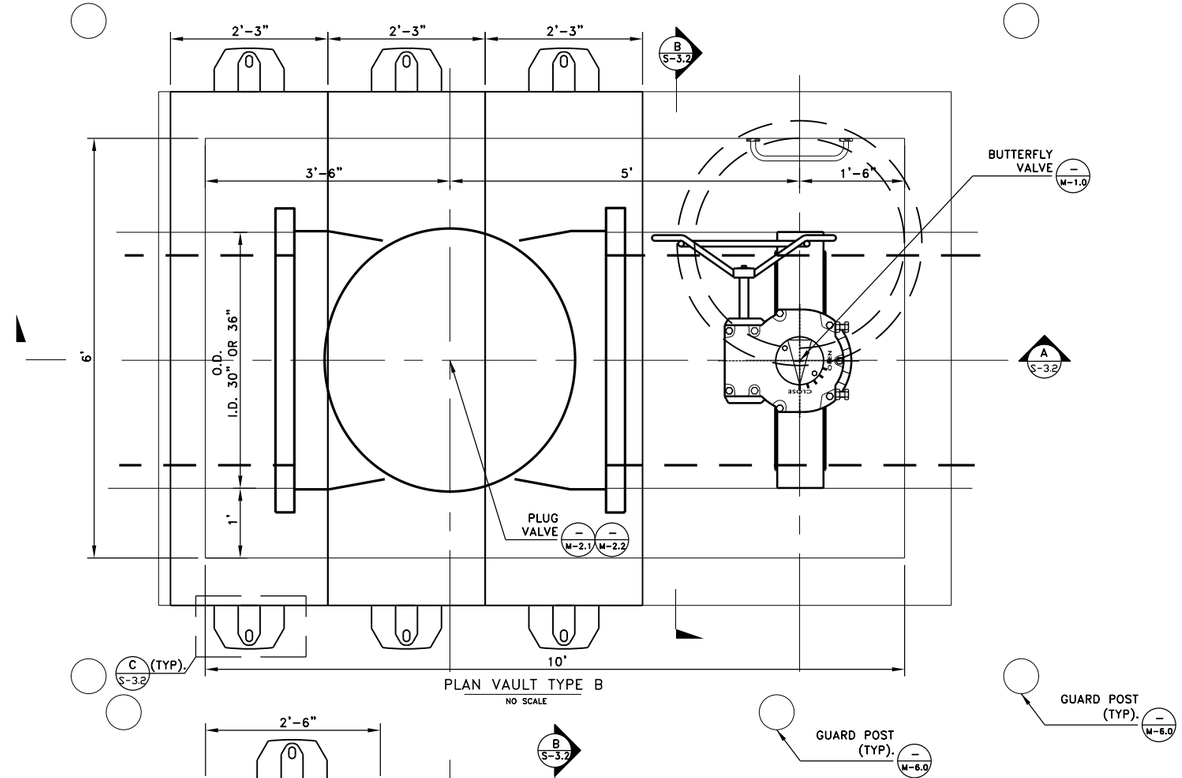

PLAN VAULT TYPE B
NO SCALE

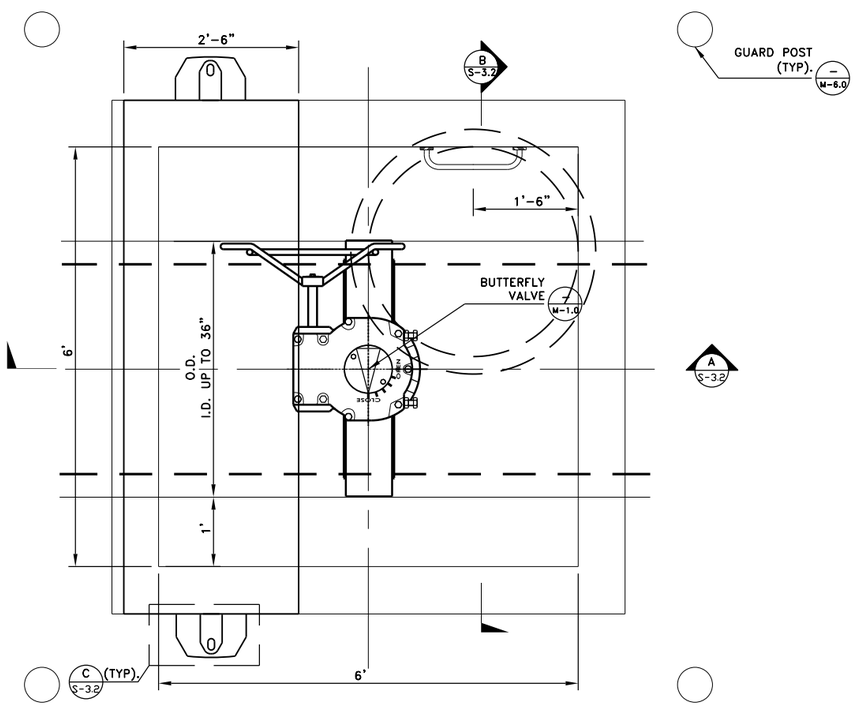

PLAN VAULT TYPE D
NO SCALE

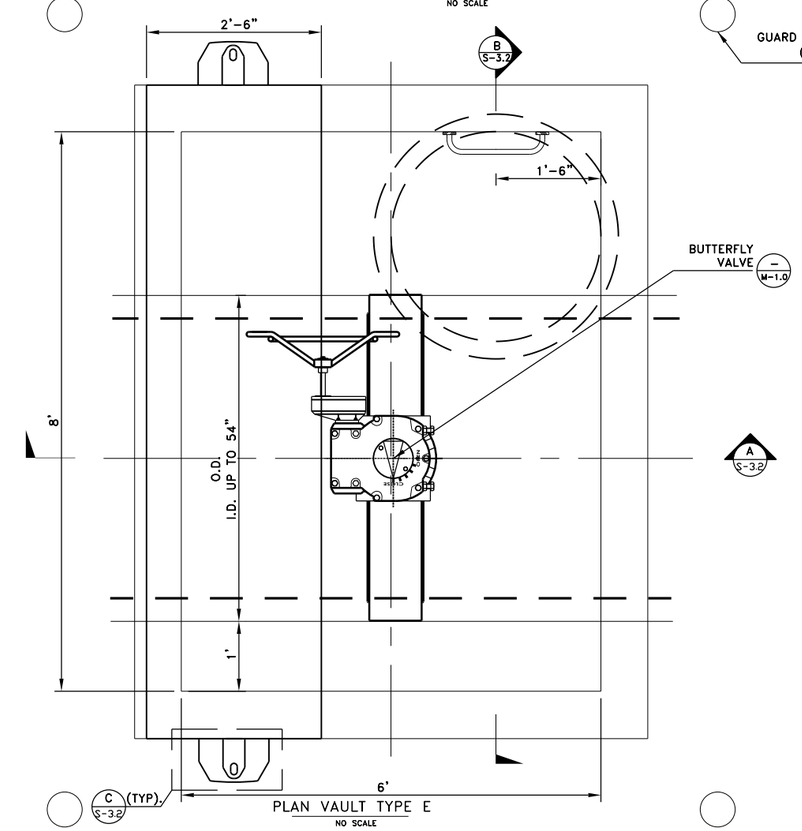

PLAN VAULT TYPE E
NO SCALE

Rev	Date	Description	By

Job No. 647979
Designed MFM
Drawn JD
Checked JZ
Reviewed JZ
Approved JZ
Reg. No. 25118
Plot Date 12-18-14

60% SUBMITTAL NOT FOR CONSTRUCTION

PREPARED BY:
PARSONS
222 SOUTH MILL AVENUE
SUITE #220
TEMPE, ARIZONA 85281
(602)852-9195
(602)952-9303 fax

PIMA MARICOPA IRRIGATION PROJECT
GILA RIVER INDIAN COMMUNITY ARIZONA 1939

192-A SOUTH ROUTE A STREET
SACATON, AZ 85147
(520)562-6700 (520)562-6791 FAX

REACHES WS-1E AND WS-1F

VAULT PLAN TYPES A, B, D, E

DRAWING NAME
S-3.0

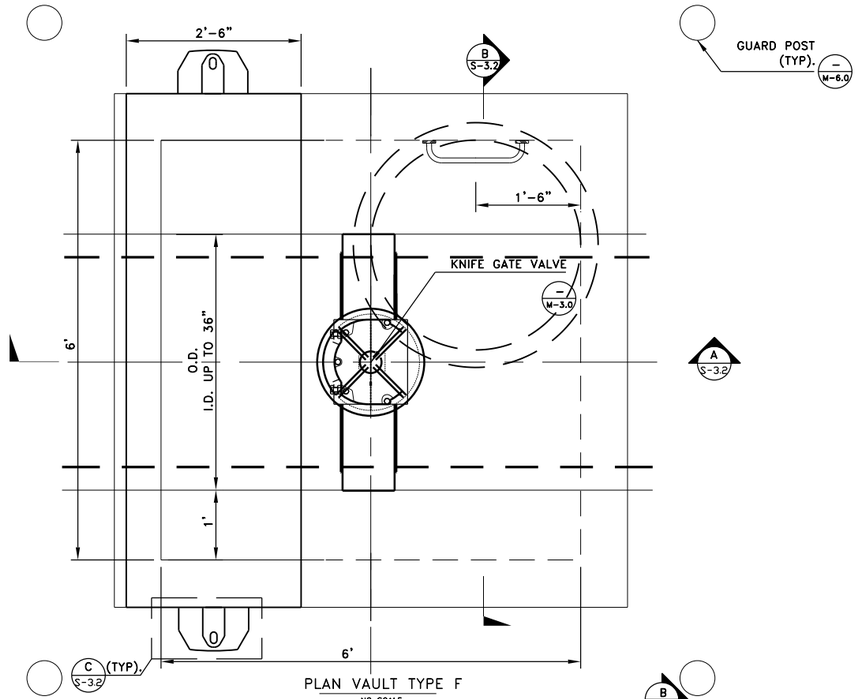

PLAN VAULT TYPE F
NO SCALE

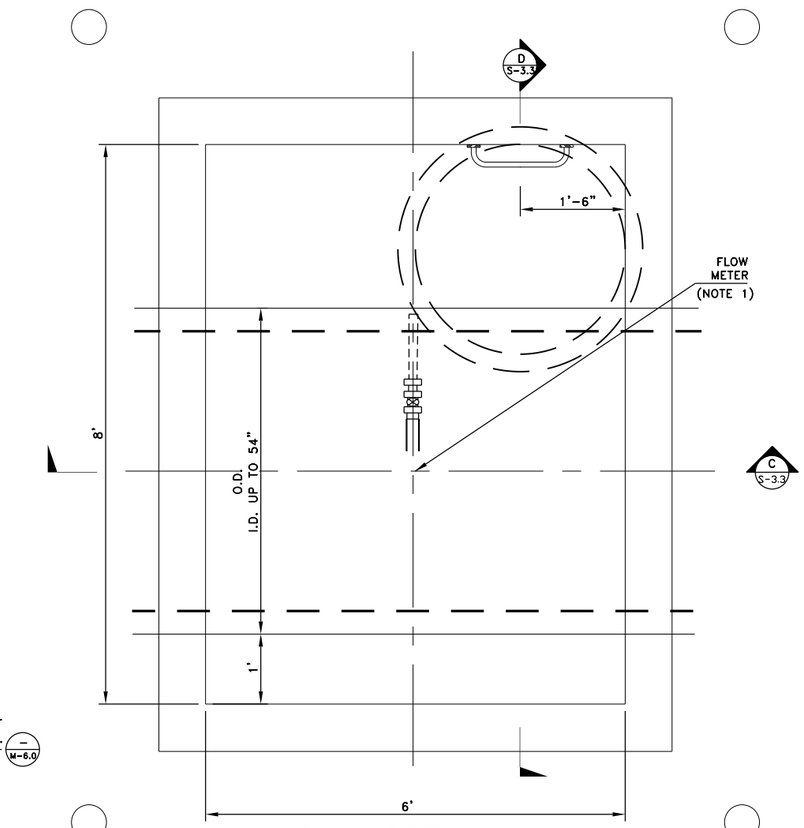

PLAN VAULT TYPE H
NO SCALE

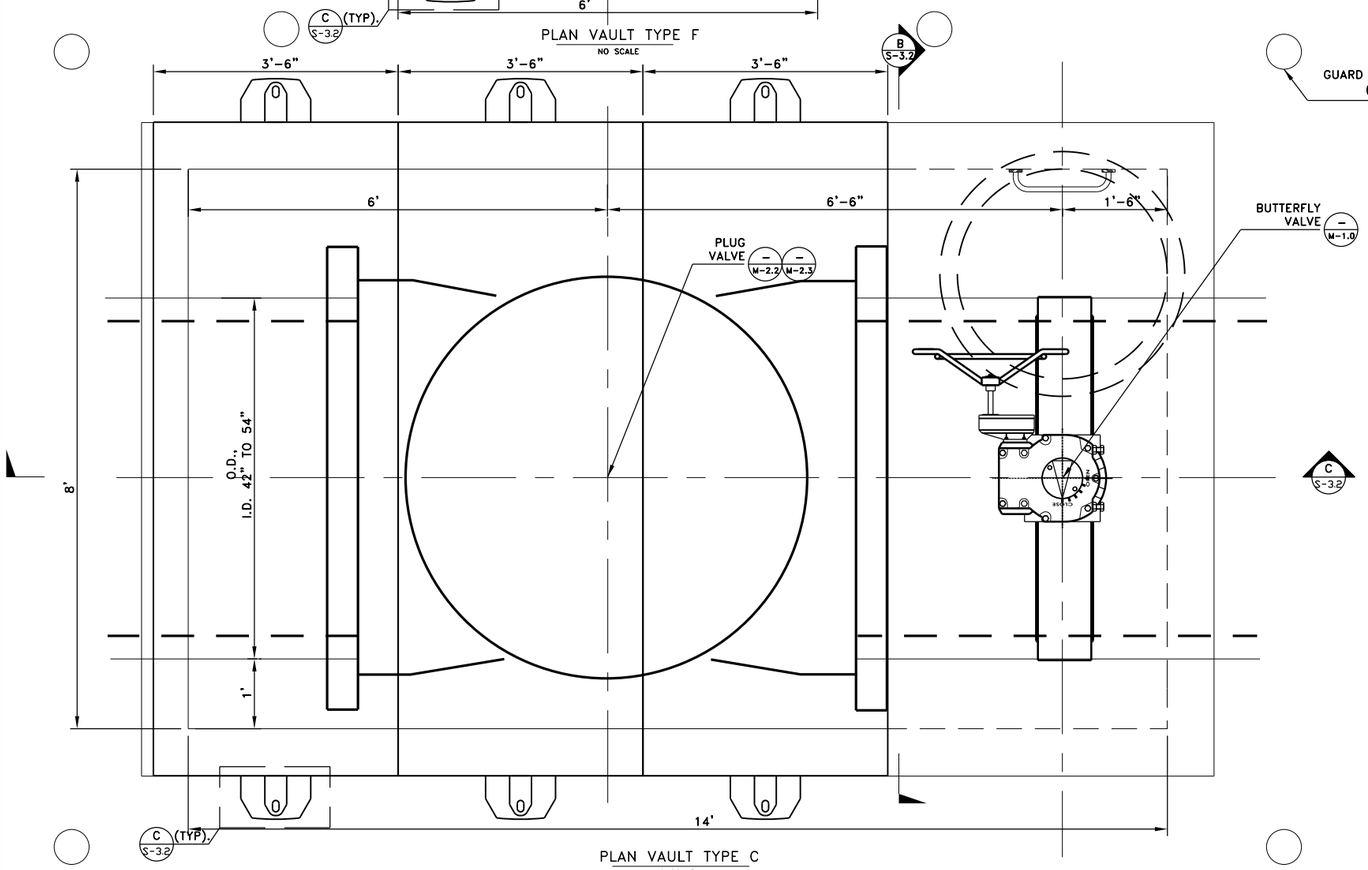

PLAN VAULT TYPE C
NO SCALE

NOTES:
1. SEE SPEC, SEC. 16724 FOR FLOWMETER SPECIFICATIONS.

Rev	Date	Description	By

Job No. 647979
Designed MFM
Drawn JD
Checked JZ
Reviewed JZ
Approved JZ
Reg. No. 25118
Plot Date 12-18-14

60% SUBMITTAL
NOT FOR CONSTRUCTION

PREPARED BY:
PARSONS
222 SOUTH MILL AVENUE
SUITE #220
TEMPE, ARIZONA 85281
(602)852-9195
(602)952-9303 fax

GILA RIVER INDIAN COMMUNITY ARIZONA 1939

PIMA MARICOPA IRRIGATION PROJECT
P.O. BOX C
192-A SOUTH ROUTE A STREET
SACATON, AZ 85147
(520)562-6700
(520)562-6791 FAX

REACHES WS-1E AND WS-1F

VAULT PLAN TYPES C, F, H

DRAWING NAME
S-3.1

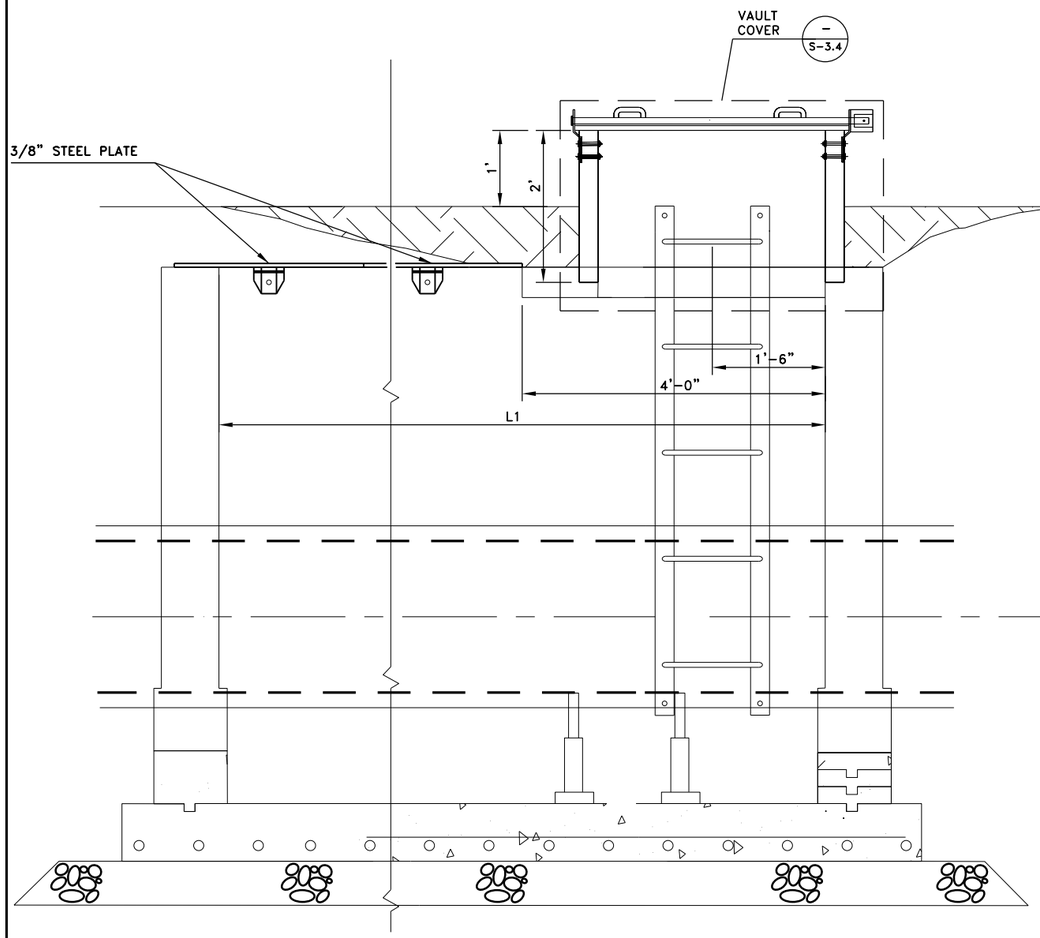

A — VAULT SECTION
NO SCALE

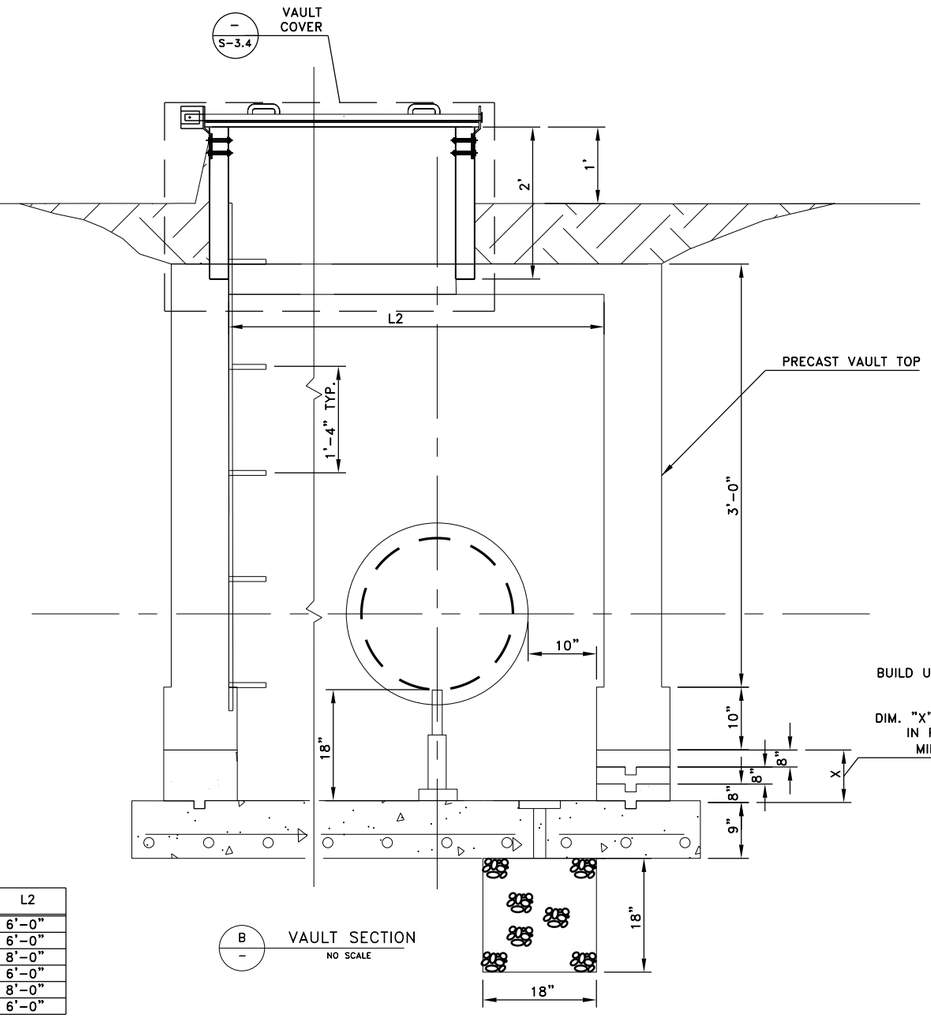

B — VAULT SECTION
NO SCALE

VAULT	L1	L2
TYPE A	10'-0"	6'-0"
TYPE B	10'-0"	6'-0"
TYPE C	14'-0"	8'-0"
TYPE D	6'-0"	6'-0"
TYPE E	6'-0"	8'-0"
TYPE F	6'-0"	6'-0"

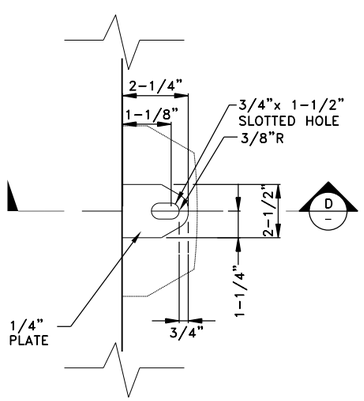

C — COVER LATCH PLATE DETAIL
NOT TO SCALE

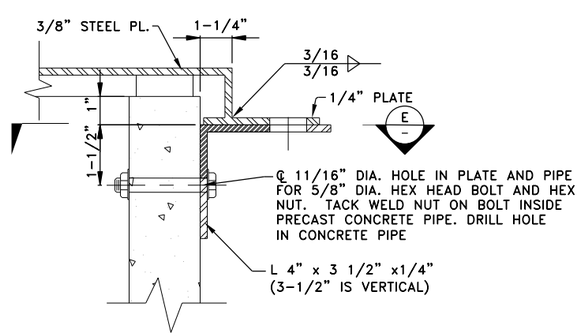

D — SECTION
NOT TO SCALE

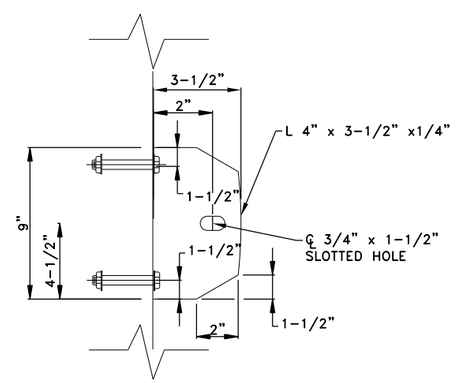

E — BASE LATCH PLATE DETAIL
NOT TO SCALE

Rev	Date	Description	By

Job No. 647979
Designed MFM
Drawn JD
Checked JZ
Reviewed JZ
Approved JZ
Reg. No. 25118
Plot Date 12-18-14

60% SUBMITTAL NOT FOR CONSTRUCTION

PREPARED BY:
PARSONS
222 SOUTH MILL AVENUE
SUITE #220
TEMPE, ARIZONA 85281
(602)852-9195
(602)952-9303 fax

PIMA MARICOPA IRRIGATION PROJECT
P.O. BOX C
192-A SOUTH ROUTE A STREET
SACATON, AZ 85147
(520)562-6700
(520)562-6791 FAX

REACHES WS-1E AND WS-1F

VAULT SECTIONS

DRAWING NAME
S-3.2

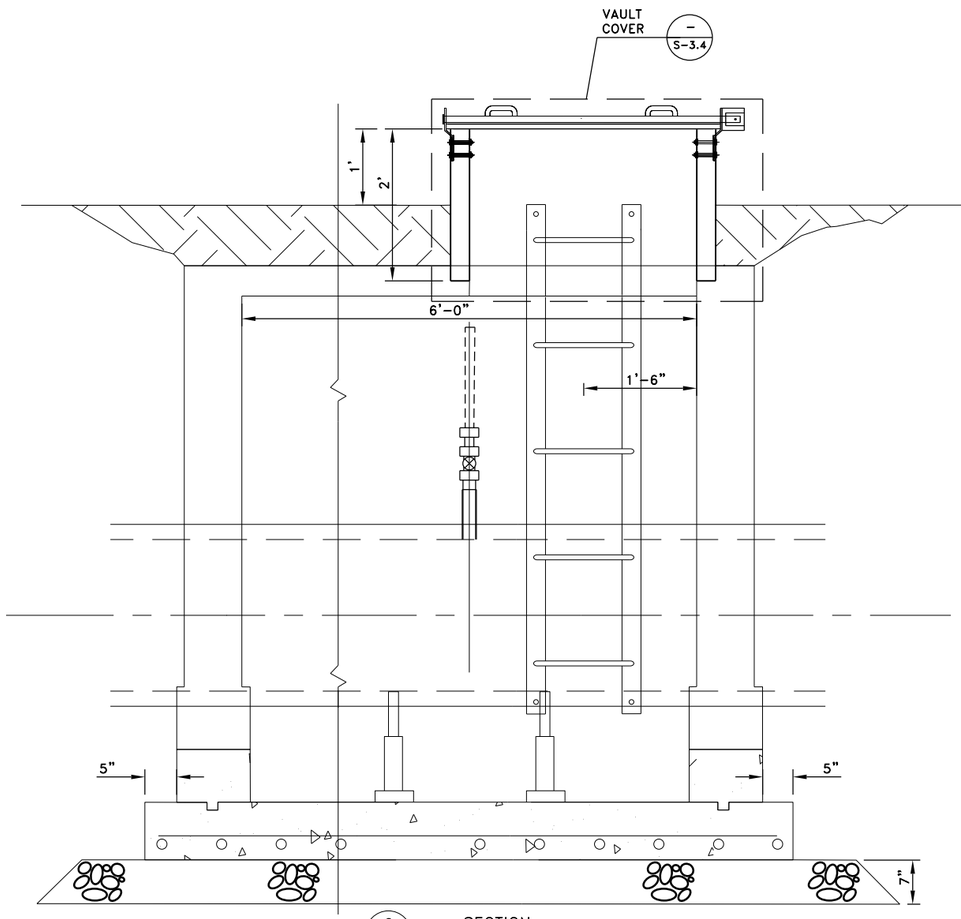

C — SECTION
NO SCALE

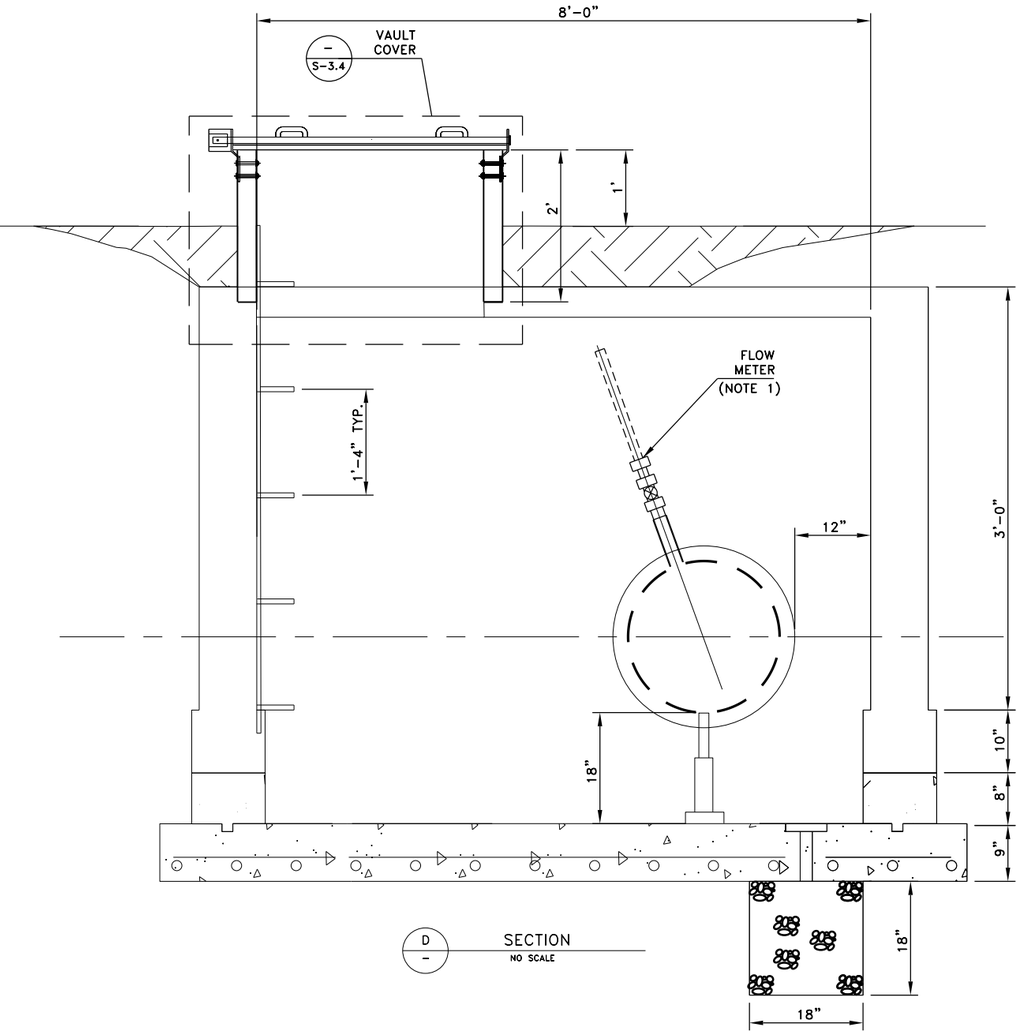

D — SECTION
NO SCALE

NOTES:
1. SEE SPEC, SEC. 16724 FOR FLOWMETER SPECIFICATIONS.

Rev	Date	Description	By

Job No. 647979
Designed MFM
Drawn JD
Checked JZ
Reviewed JZ
Approved JZ
Reg. No. 25118
Plot Date 12-18-14

60% SUBMITTAL NOT FOR CONSTRUCTION

PREPARED BY:
PARSONS
222 SOUTH MILL AVENUE
SUITE #220
TEMPE, ARIZONA 85281
(602)852-9195
(602)952-9303 fax

GILA RIVER INDIAN COMMUNITY ARIZONA 1933

PIMA MARICOPA IRRIGATION PROJECT
P.O. BOX C
192-A SOUTH ROUTE A STREET
SACATON, AZ 85147
(520)562-6700
(520)562-6791 FAX

REACHES WS-1E AND WS-1F

VAULT SECTIONS

DRAWING NAME
S-3.3

NOTES:

1. ALL MATERIAL IS ALUMINUM UNLESS OTHERWISE NOTED.
2. GALVANIZE ALL FERROUS METALWORK AFTER FABRICATION. MINIMUM ZINC COATING THICKNESS OF 2 OUNCES PER SQUARE FOOT.
3. LID SHALL OPEN DOWNSTREAM

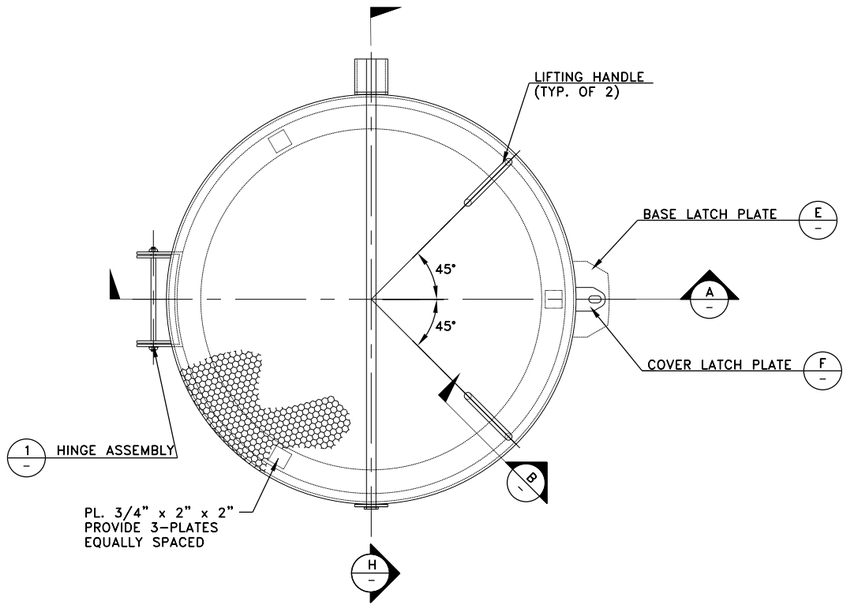

COVER PLATE – PLAN
SCALE: 1 1/2"=1'-0"

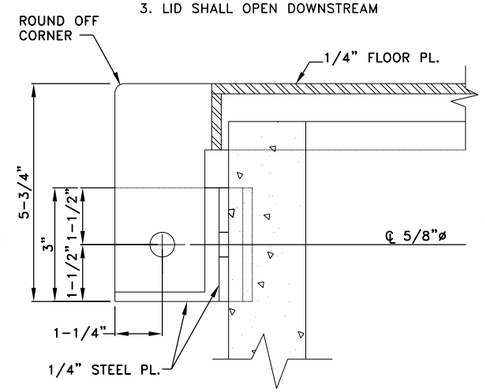

C SECTION–COVER PLATE CONNECTION
NOT TO SCALE

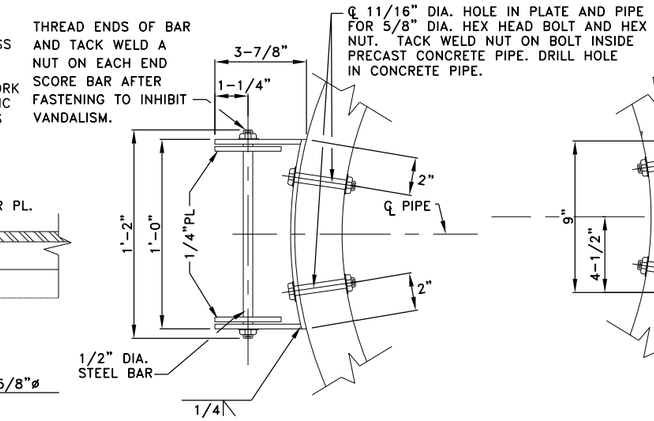

D SECTION
NOT TO SCALE

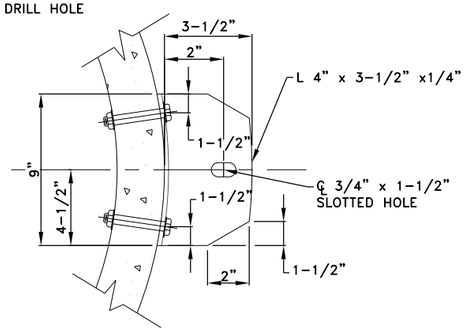

E BASE LATCH PLATE DETAIL
NOT TO SCALE

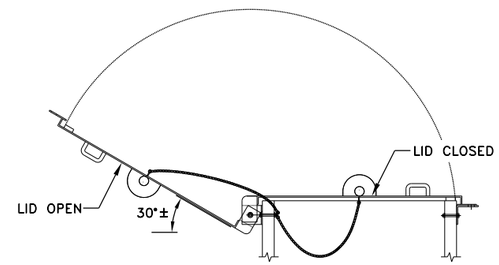

3 CHAIN STOP DETAIL
NOT TO SCALE

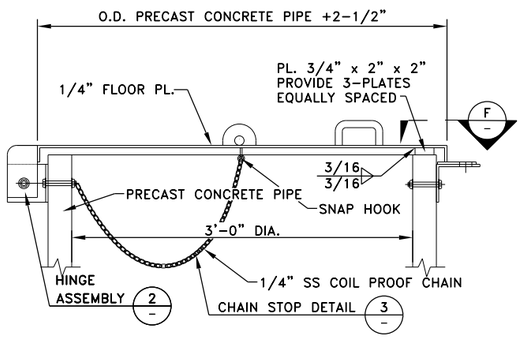

A SECTION
SCALE: 1 1/2"=1'-0"

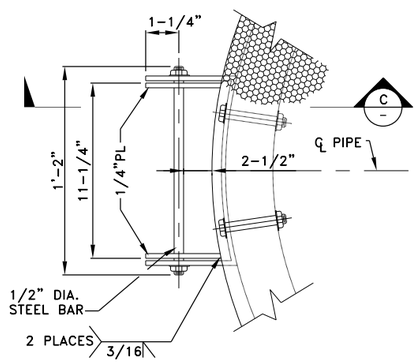

1 DETAIL
NOT TO SCALE

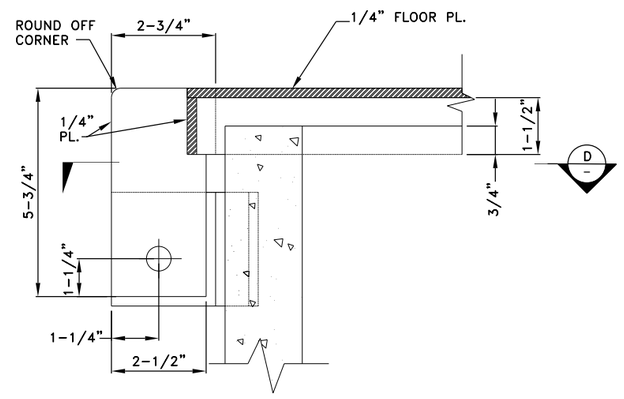

2 DETAIL–PIPE WALL CONNECTION
NOT TO SCALE

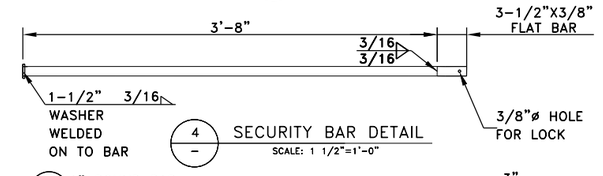

4 SECURITY BAR DETAIL
SCALE: 1 1/2"=1'-0"

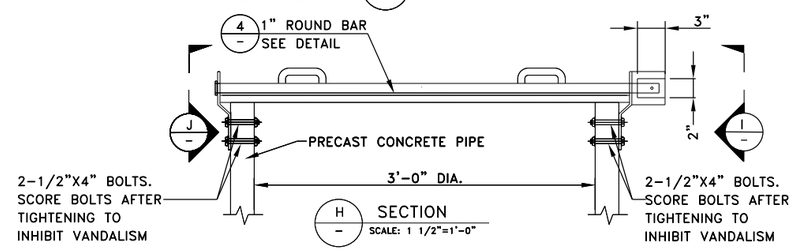

H SECTION
SCALE: 1 1/2"=1'-0"

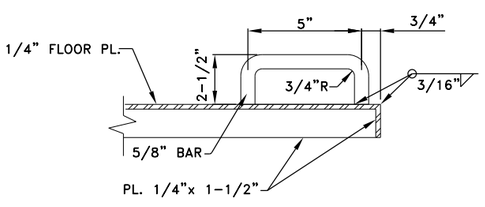

B LIFTING HANDLE SECTION
NOT TO SCALE

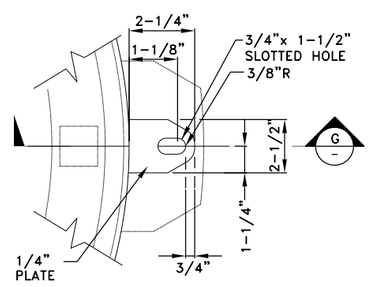

F COVER LATCH PLATE DETAIL
NOT TO SCALE

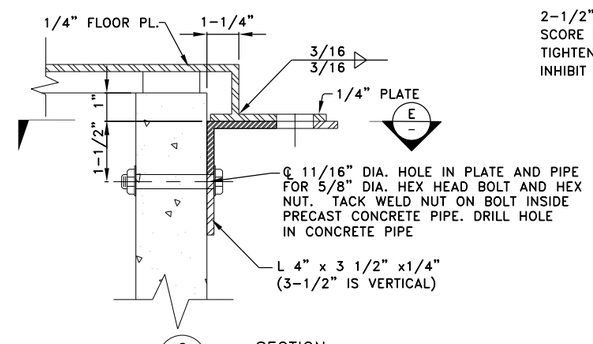

G SECTION
NOT TO SCALE

I SECTION
SCALE: 3"=1'-0"

J SECTION
SCALE: 3"=1'-0"

Rev	Date	Description	By

Job No. 647979
Designed MFM
Drawn JD
Checked JZ
Reviewed JZ
Approved JZ
Reg. No. 25118
Plot Date 12-18-14

60% SUBMITTAL NOT FOR CONSTRUCTION

PREPARED BY:
PARSONS
222 SOUTH MILL AVENUE
SUITE #220
TEMPE, ARIZONA 85281
(602)852-9195
(602)952-9303 fax

GILA RIVER INDIAN COMMUNITY ARIZONA 1939

PIMA MARICOPA IRRIGATION PROJECT
P.O. BOX C
192-A SOUTH ROUTE A STREET
SACATON, AZ 85147
(520)562-6700
(520)562-6791 FAX

REACHES WS-1E AND WS-1F

VAULT COVER PLAN, SECTIONS, AND DETAILS

DRAWING NAME
S-3.4

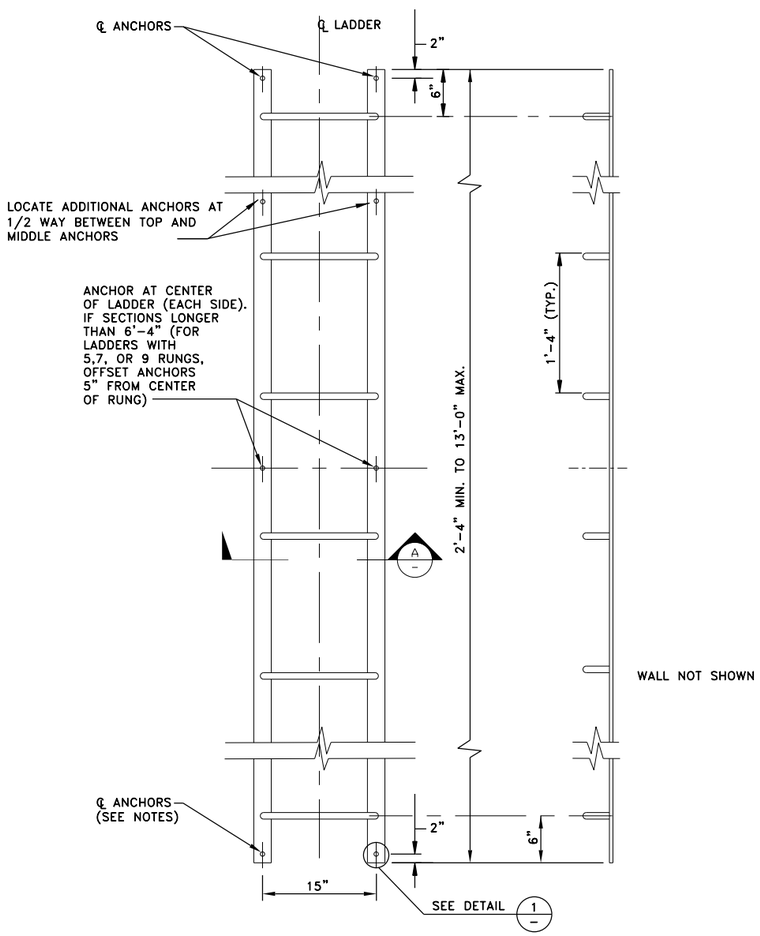

LADDER ELEVATION DETAILS

SCALE: 1-1/2" = 1'-0"

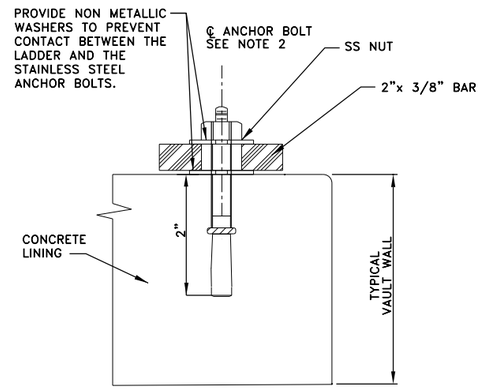

1 ANCHOR DETAIL

NO SCALE

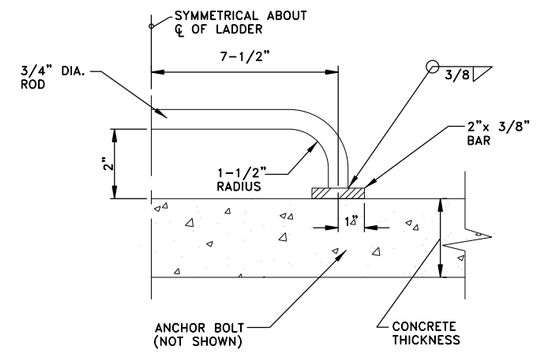

A SECTION

NO SCALE

NOTES:

1. LADDERS SHALL BE FABRICATED FROM ASTM A36 STEEL.
2. 3/8" DIAM. SS ANCHORS WITH SIMPSON STRONG TIE SET ADHESIVE (ICBO ER-5279) OR EQUAL AS APPROVED BY ENGINEER. DRILL HOLE MIN. 2-1/4". DO NOT USE HAMMER TO SET HOLE.
3. LADDERS SHALL BE PAINTED WITH TRAFFIC YELLOW PAINT PER SPECIFICATIONS.

Rev	Date	Description	By

Job No. 647979
Designed MFM
Drawn JD
Checked JZ
Reviewed JZ
Approved JZ
Reg. No. 25118
Plot Date 12-18-14

60% SUBMITTAL NOT FOR CONSTRUCTION

PREPARED BY:
PARSONS
222 SOUTH MILL AVENUE
SUITE #220
TEMPE, ARIZONA 85281
(602)852-9195
(602)952-9303 fax

GILA RIVER INDIAN COMMUNITY ARIZONA 1939

PIMA MARICOPA IRRIGATION PROJECT
P.O. BOX C
192-A SOUTH ROUTE A STREET
SACATON, AZ 85147
(520)562-6700
(520)562-6791 FAX

REACHES WS-1E AND WS-1F

VAULT DETAILS - LADDER

DRAWING NAME
S-3.5

HP 150#-48"(MSS)

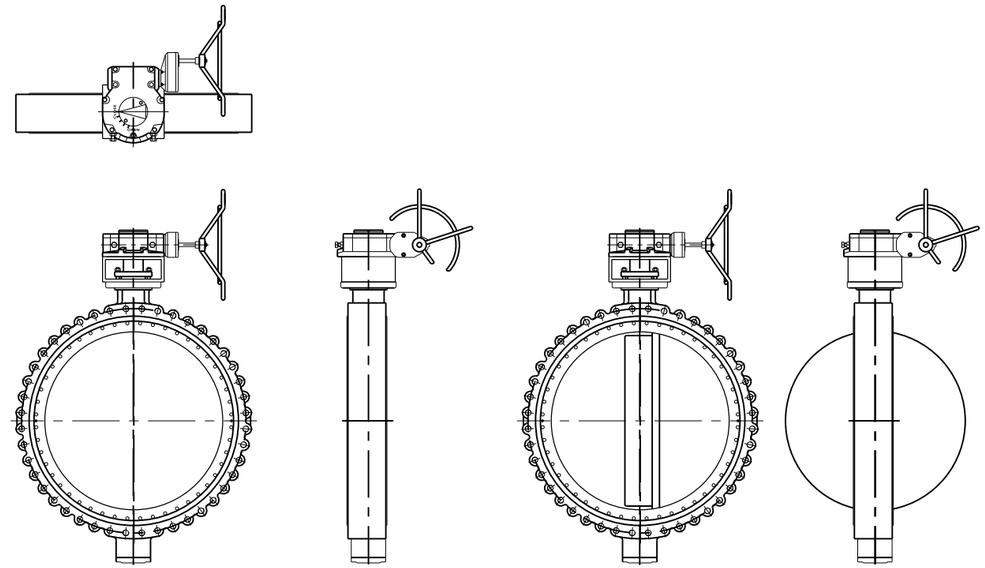

HP 150#-36"(MSS)

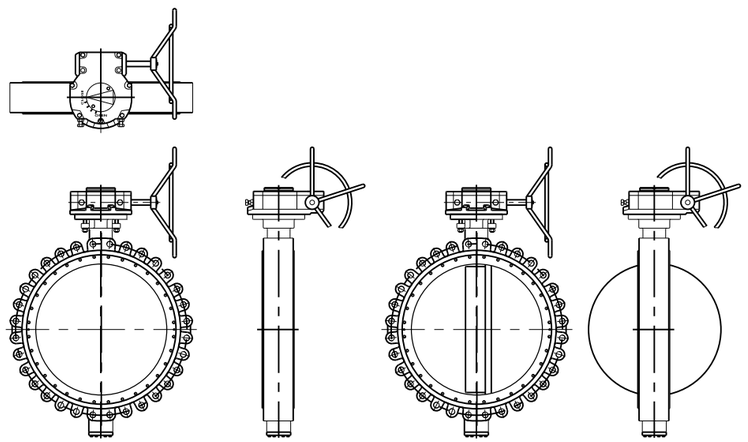

HP 150#-42"(MSS)

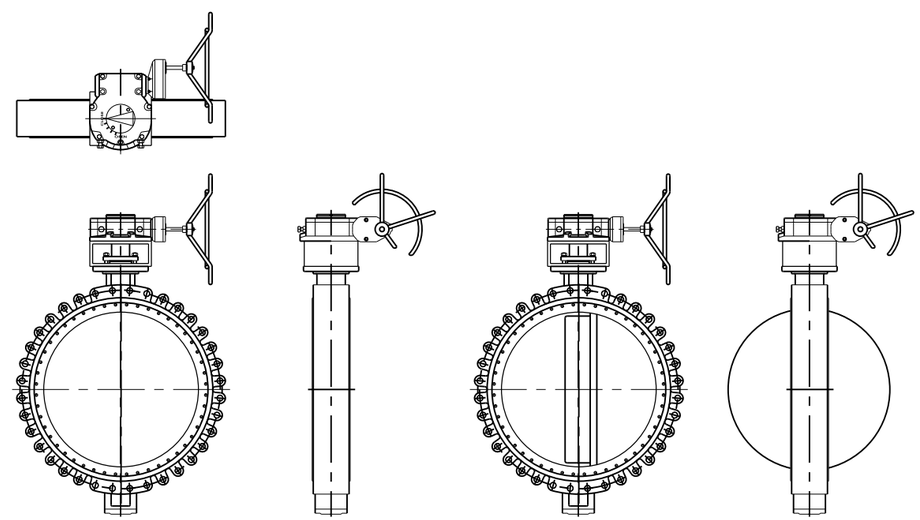

HP 150#-30"(MSS)

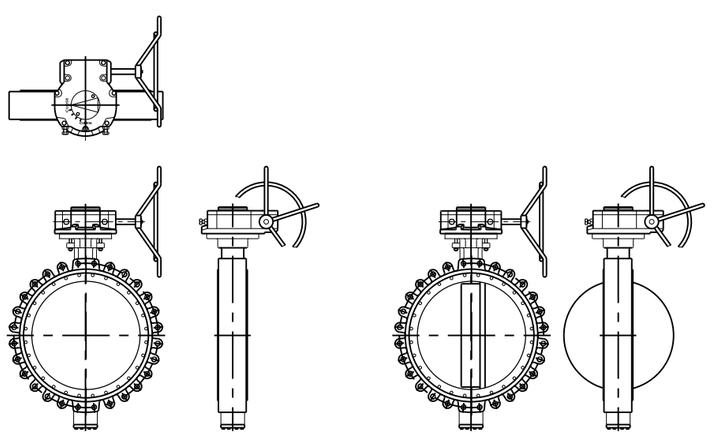

NOTES:

1. MANUFACTURER'S DATA SHEET TO BE PROVIDED AT 90%.

Rev	Date	Description	By

Job No. 647979
Designed MFM
Drawn JD
Checked JZ
Reviewed JZ
Approved JZ
Reg. No. 25118
Plot Date 12-18-14

60% SUBMITTAL NOT FOR CONSTRUCTION

PREPARED BY:
PARSONS
222 SOUTH MILL AVENUE
SUITE #220
TEMPE, ARIZONA 85281
(602)852-9195
(602)952-9303 fax

PIMA MARICOPA IRRIGATION PROJECT
P.O. BOX C
192-A SOUTH ROUTE A STREET
SACATON, AZ 85147
(520)562-6700
(520)562-6791 FAX

REACHES WS-1E AND WS-1F

BUTTERFLY VALVE

DRAWING NAME
M-1.0

NOTES:

1. MANUFACTURER'S DATA SHEET (HENRY PRATT COMPANY)

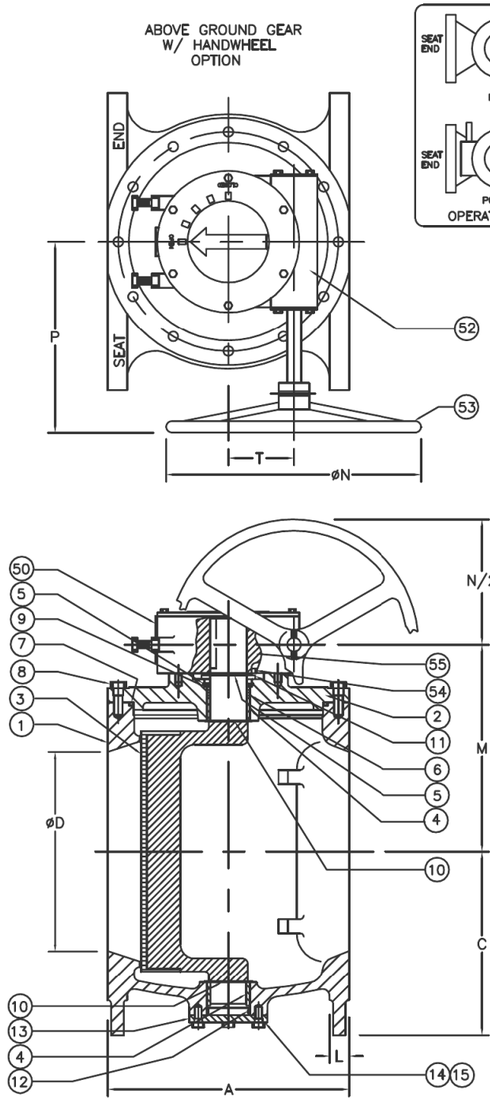

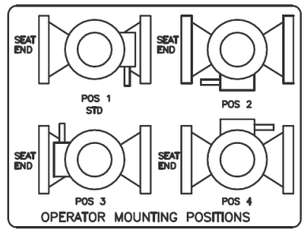

VALVE SIZE	A	C	D	E	F	G	H	J	K	L	M	N	P	T	FLANGE STYLE	GEAR SIZE
14	17	13	14	18.75	21	1.13	8	1	4	1.13	15.06	18	11.63	4.75	CL125	M80
16	17.75	14	16	21.25	23.25	1.13	8	1	8	1.44	15.81	18	11.63	4.75	CL125	M80
18	21.50	15	18	22.75	25	1.25	8	1.13	8	1.56	17	18	11.63	4.75	CL125	M80
20	23.50	16	20	25	27.50	1.25	12	1.13	8	1.69	20.44	18	11.63	4.75	CL125	M80

REFERENCE ONLY

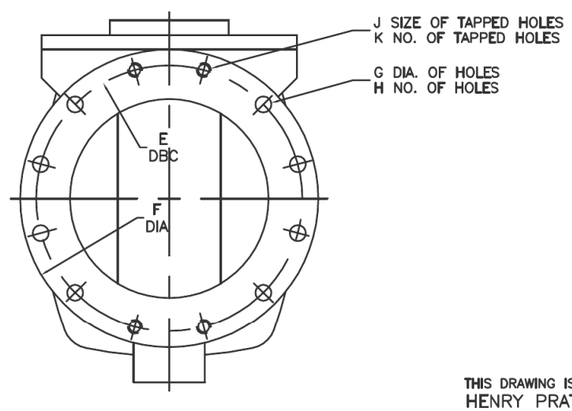

ITEM	QTY.	DESCRIPTION	MATERIAL
55	1	QUADRANT	DUCTILE IRON
54	2	SLEEVE BEARING	BRONZE
53	1	HANDWHEEL	DUCTILE IRON
52	1	WORM GEAR	STEEL
50	1	HOUSING	CAST IRON
15	AR	LOCKWASHER	STEEL/ZINC
14	AR	CAP SCREW	STEEL/ZINC
13	1	TRUNION COVER	CAST IRON
12	1	O RING	ELAS. AS SPEC.
11	1	SUPPORT WASHER	STEEL
10	2	WASHER	PTFE
9	1	WASHER	BRASS
8	AR	CAP SCREW	STEEL/ZINC
7	1	O RING	ELAS. AS SPEC.
6	2	U CUP SEALS	ELAS. AS SPEC.
5	2	RETAINING RING	SPRING STEEL
4	2	SLEEVE BEARING	316 STN. STEEL
3	1	PLUG ELASTOMER AS SPEC.	DUCTILE IRON
2	1	CAP	A126 CL B
1	1	BODY	A126 CL B

PRATT
Henry Pratt Company

REV.	DATE	REVISIONS	BY

BY	DATE	SCALE
CR	10/95	NONE
CHK'D		DIMENSIONS INCHES

TITLE: 14"–20" PLUG VALVE FLANGED GEAR OPERATED W/ HANDWHEEL

DWG. NO. HP49036

THIS DRAWING IS THE PROPERTY OF HENRY PRATT COMPANY AND MUST NOT BE USED IN ANY WAY PREJUDICIAL TO THEIR INTERESTS

Rev	Date	Description	By

Job No. 647979
Designed MFM
Drawn JD
Checked JZ
Reviewed JZ
Approved JZ
Reg. No. 25118
Plot Date 12-18-14

60% SUBMITTAL
NOT FOR CONSTRUCTION

PREPARED BY:
PARSONS
222 SOUTH MILL AVENUE
SUITE #220
TEMPE, ARIZONA 85281
(602)952-9195
(602)952-9303 fax

GILA RIVER INDIAN COMMUNITY ARIZONA 1933

PIMA MARICOPA IRRIGATION PROJECT
P.O. BOX C
192-A SOUTH ROUTE A STREET
SACATON, AZ 85147
(520)562-6700
(520)562-6791 FAX

REACHES WS-1E AND WS-1F

PLUG VALVE 18"

DRAWING NAME
M-2.0

NOTES:

1. MANUFACTURER'S DATA SHEET (HENRY PRATT COMPANY)

REFERENCE ONLY

DRAWINGS ARE FOR INFORMATION PURPOSES ONLY; PLEASE REQUEST CERTIFIED DRAWINGS BEFORE PREPARING PIPING DIAGRAMS

VALVE SIZE	A	B	C	D	E	F	G	H	L
24	42	19.38	21.63	24	30.00	31.50	0.88	16	1.88
30	51	23.44	24.75	30	36.88	39.13	1.13	20	2.12

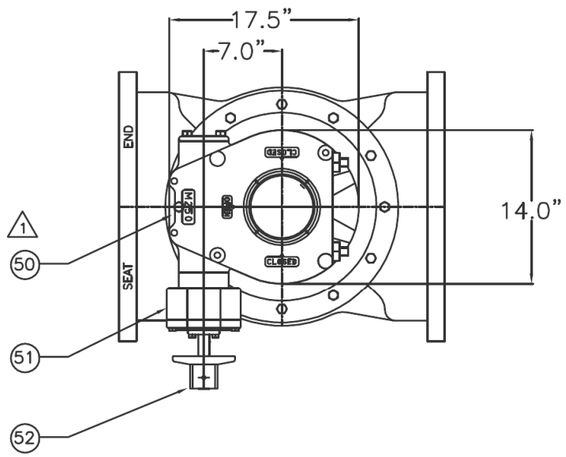

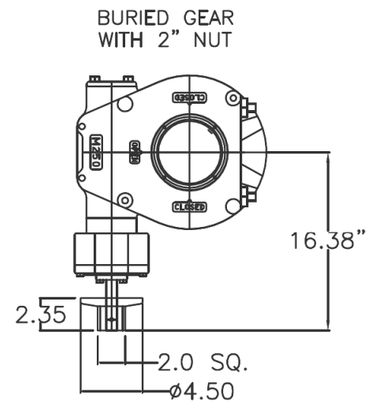

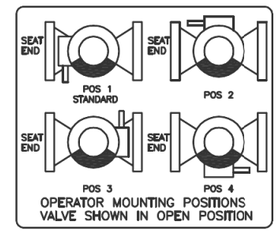

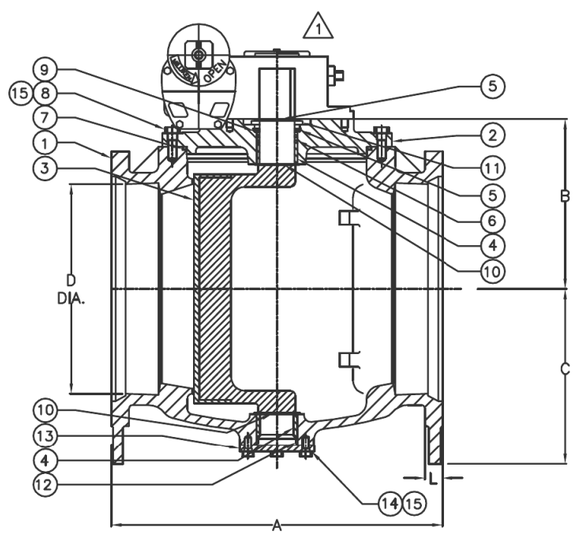

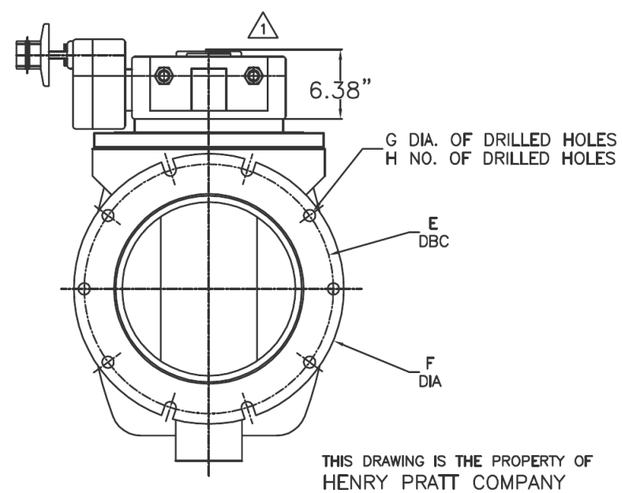

ITEM	QTY.	DESCRIPTION	MATERIAL
52	1	2" NUT	DUCTILE IRON
51	1	SPUR GEAR	–
50	1	GEAR OPERATOR	–
15	AR	LOCKWASHER	STEEL/ZINC
14	AR	CAP SCREW	STEEL/ZINC
13	1	TRUNION COVER	A 126 CL B
12	1	O RING	ELAS. AS SPEC.
11	1	SUPPORT WASHER	STEEL
10	2	GRIT SEAL	PTFE
9	1	WASHER	STEEL
8	AR	CAP SCREW	STEEL/ZINC
7	1	O RING	ELAS. AS SPEC.
6	2	U CUP SEALS	ELAS. AS SPEC.
5	2	RETAINING RING	SPRING STEEL
4	2	SLEEVE BEARING	BRONZE/SS
3	1	PLUG ELASTOMER AS SPEC.	A 126 CL B
2	1	CAP	A 126 CL B
1	1	BODY	A 126 CL B

THIS DRAWING IS THE PROPERTY OF HENRY PRATT COMPANY AND MUST NOT BE USED IN ANY WAY PREJUDICIAL TO THEIR INTERESTS

PRATT
HENRY PRATT COMPANY

ISSUE NUMBER	DATE	REVISIONS	BY
1	07/09	REVISED GEAR & ADDED 30" VALVE DIMENSIONS [ECR# 164]	JC

BY | DATE 06/09 | SCALE NONE
CHK'D | DIMENSIONS INCHES

TITLE: 24"–30" PLUG VALVE, MJ ENDS MIN. 80% PORT w/ M250 GEAR

DWG. NO. HP49858

Rev	Date	Description	By

Job No. 647979
Designed MFM
Drawn JD
Checked JZ
Reviewed JZ
Approved JZ
Reg. No. 25118
Plot Date 12-18-14

60% SUBMITTAL NOT FOR CONSTRUCTION

PREPARED BY:
PARSONS
222 SOUTH MILL AVENUE
SUITE #220
TEMPE, ARIZONA 85281
(602)852-9195
(602)952-9303 fax

PIMA MARICOPA IRRIGATION PROJECT
P.O. BOX C
192-A SOUTH ROUTE A STREET
SACATON, AZ 85147
(520)562-3701
(520)562-6791 FAX

REACHES WS-1E AND WS-1F

PLUG VALVE 24" AND 30"

DRAWING NAME
M-2.1

NOTES:

1. MANUFACTURER'S DATA SHEET (HENRY PRATT COMPANY)

REFERENCE ONLY

DRAWINGS ARE FOR INFORMATION PURPOSES ONLY; PLEASE REQUEST CERTIFIED DRAWINGS BEFORE PREPARING PIPING DIAGRAMS

VALVE SIZE	A	B	C	D	E	F	G	H	L
36	60	27.63	29	36	43.75	46	1.13	24	2
42	72	27.63	29	42	50.63	53	1.38	28	2

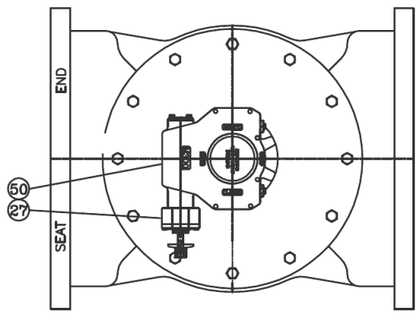

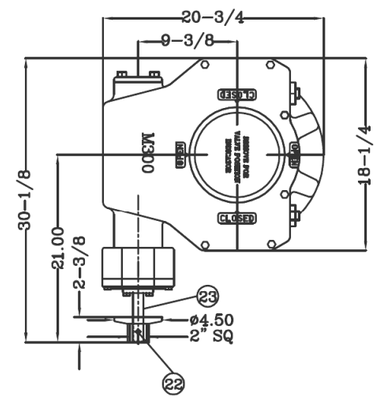

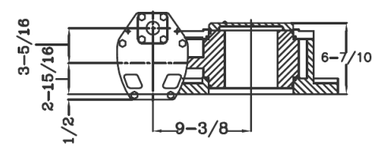

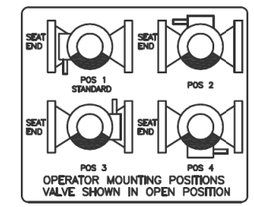

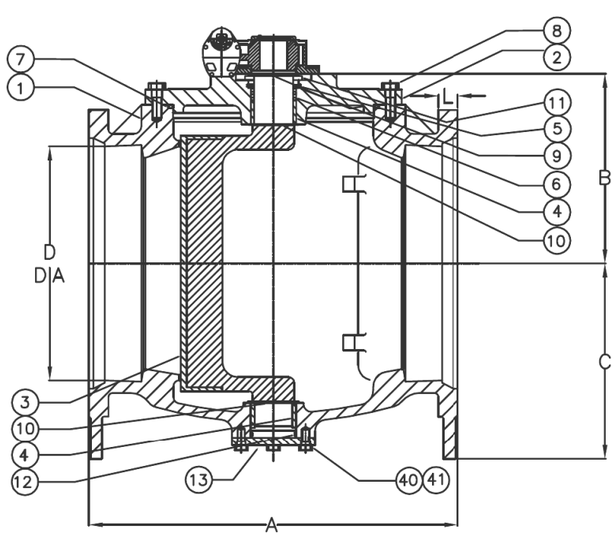

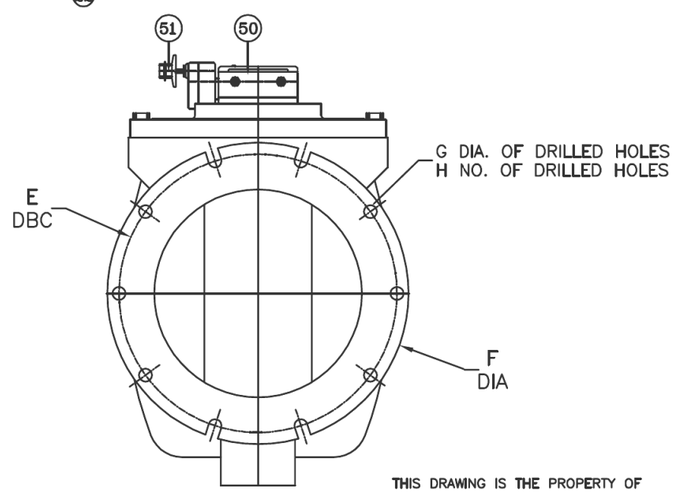

ITEM	QTY.	DESCRIPTION	MATERIAL
51	1	2" NUT	DUCTILE IRON
50	1	M-BURIED GEAR	-
41	AR	LOCKWASHER	STEEL/ZINC
40	AR	CAP SCREW	STEEL/ZINC
27	2	SPUR GEAR	-
23	1	GEAR STEM	STEEL SAE 1045
22	1	SPRINGPIN	STEEL
17	2	O-RING	BUNA-N
13	1	TRUNION COVER	CAST IRON
12	1	O RING	ELAS. AS SPEC.
11	1	SUPPORT WASHER	STEEL
10	2	WASHER	PTFE
9	1	WASHER	STEEL
8	AR	CAP SCREW	STEEL/ZINC
7	1	O RING	ELAS. AS SPEC.
6	2	U CUP SEALS	ELAS. AS SPEC.
5	2	RETAINING RING	SPRING STEEL
4	2	SLEEVE BEARING	BRONZE/SS
3	1	PLUG ELASTOMER AS SPEC.	A126 CL B
2	1	CAP	A126 CL B
1	1	BODY	A126 CL B

PRATT VALVE CO.

REV.#	DATE	REVISIONS	BY

BY JC | DATE 09/09 | SCALE NONE
CHK'D | DIMENSIONS INCHES

TITLE: 36" AND 42" MJ ENDS, w/ M300 GEAR AND 2" NUT

DWG. NO. HP 49725

THIS DRAWING IS THE PROPERTY OF HENRY PRATT VALVE COMPANY AND MUST NOT BE USED IN ANY WAY PREJUDICIAL TO THEIR INTERESTS

Rev	Date	Description	By

Job No. 647979
Designed MFM
Drawn JD
Checked JZ
Reviewed JZ
Approved JZ
Reg. No. 25118
Plot Date 12-18-14

60% SUBMITTAL NOT FOR CONSTRUCTION

PREPARED BY:
PARSONS
222 SOUTH MILL AVENUE
SUITE #220
TEMPE, ARIZONA 85281
(602)852-9195
(602)952-9303 fax

PIMA MARICOPA IRRIGATION PROJECT
P.O. BOX C
192-A SOUTH ROUTE A STREET
SACATON, AZ 85147
(520)562-6700
(520)562-6791 FAX

REACHES WS-1E AND WS-1F

PLUG VALVE 36" AND 42"

DRAWING NAME
M-2.2

NOTES;

1. MANUFACTURER'S DATA SHEET (HENRY PRATT COMPANY)

REFERENCE ONLY

VALVE SIZE	A	D	E	F	G
48	84.00	48	56.00	59.50	1-5/8
54	96.00	54	62.75	66.25	1-7/8

ABOVE GROUND SERVICE GEAR
WITH ROTORK HANDWHEEL
WGR700AG

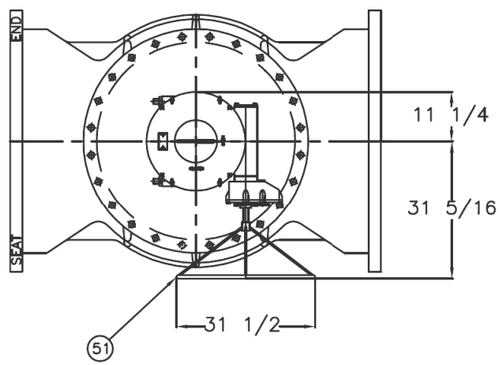

BURIED SERVICE GEAR
WITH 2" ROTORK AWWA NUT

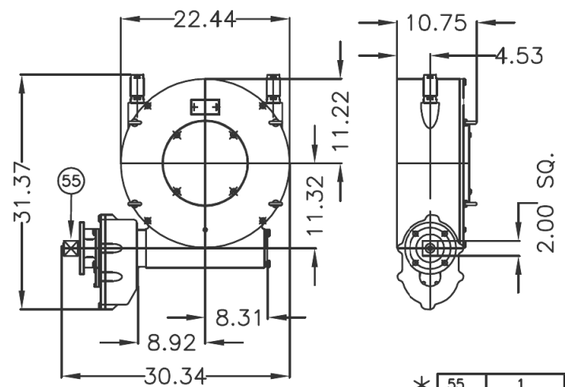

WGR700BG
PICTORIAL VIEW

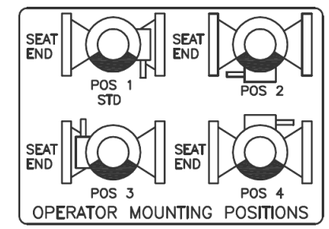

DRAWINGS ARE FOR
INFORMATION PURPOSES ONLY;
PLEASE REQUEST CERTIFIED DRAWINGS
BEFORE PREPARING PIPING DIAGRAMS

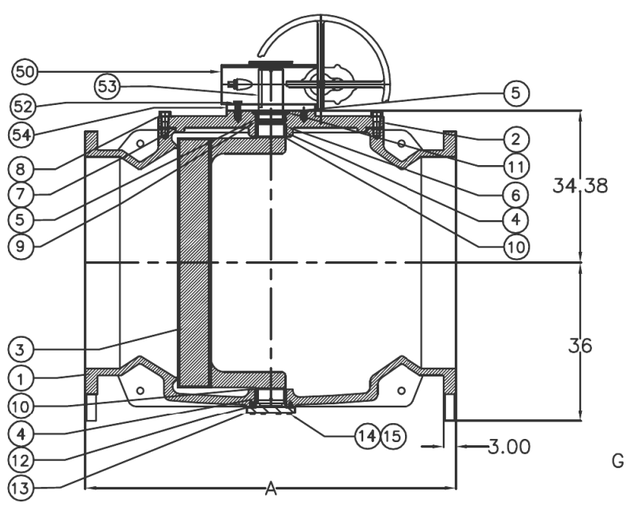

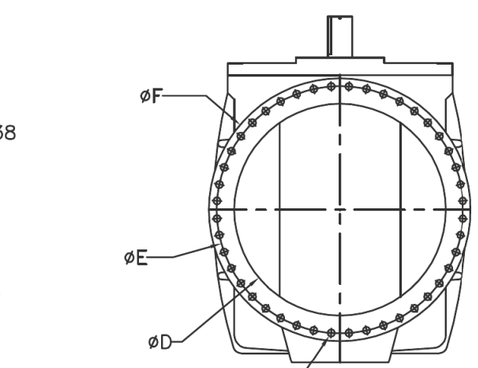

(44) THRU HOLES
G DIA. OF THRU HOLES

* AS REQUIRED

ITEM	QUANTITY	DESCRIPTION	MATERIAL
* 55	1	2" AWWA NUT	DUCTILE IRON
54	1	RISER RING	STEEL
53	1	KEY	STEEL
52	AR	SHCS	A574 STEEL
* 51	1	HANDWHEEL	–
50	1	GEAR (SEE DRAWING)	–
15	AR	LOCKWASHER	☐STEEL ☐STN. STEEL
14	AR	H.H. CAP SCREW	☐STEEL ☐STN. STEEL
13	1	TRUNION COVER	DUCTILE IRON A536 GR. 65-45-12
12	1	"O" RING	ELASTOMER AS SPEC.
11	1	SUPPORT WASHER	STEEL
10	2	GRIT SEAL	PTFE
9	1	SEAL RETAINING RING	STEEL
8	AR	H.H. CAP SCREW	☐STEEL ☐STN. STEEL
7	1	"O" RING	ELASTOMER AS SPEC.
6	2	U CUP SEALS	ELASTOMER AS SPEC.
5	2	SNAP RING	SPRING STEEL
4	2	SLEEVE BEARING	STAINLESS STEEL
3	1	PLUG (ELASTOMER AS SPEC.)	CAST IRON A126 CLASS B
2	1	BONNET (CAP)	CAST IRON A126 CLASS B
1	1	BODY	CAST IRON A126 CLASS B

MATERIAL LIST

THIS DRAWING IS THE PROPERTY OF
HENRY PRATT CO.
AND
MUST NOT BE USED IN ANY WAY
PREJUDICIAL TO THEIR INTERESTS

DRAWN	J. COLPAN
CHECKED	A. JACKSON
APPROVED	B. JACKSON
DATE	03/10/2010
REF. DWG	–

TITLE:
48"-54" PLUG VALVE, FLANGED
w/ ROTORK WGR700AG OR WGR700BG GEARS
ABOVE GROUND SERVICE WITH HANDWHEEL OR
BURIED SERVICE WITH 2" AWWA NUT OPTION

TYPE: 4800/5400-601N1AG/BG

DRAWING NO.: HP46319

REVISIONS

ISSUE	CHANGE NO. OR DESCRIPTION	DATE	BY
1	ADDED 54" VALVE SIZE	04/29/13	AA
2	–	–	–
3	–	–	–
4	–	–	–

Rev	Date	Description	By

Job No. 647979
Designed MFM
Drawn JD
Checked JZ
Reviewed JZ
Approved JZ
Reg. No. 25118
Plot Date 12-18-14

60% SUBMITTAL
NOT FOR
CONSTRUCTION

PREPARED BY:
PARSONS
222 SOUTH MILL AVENUE
SUITE #220
TEMPE, ARIZONA 85281
(602)852-9195
(602)952-9303 fax

GILA RIVER INDIAN COMMUNITY ARIZONA 1939

PIMA MARICOPA IRRIGATION PROJECT
P.O. BOX C
192-A SOUTH ROUTE A STREET
SACATON, AZ 85147
(520)562-6700
(520)562-6791 FAX

REACHES WS-1E AND WS-1F

PLUG VALVE 48" AND 54"

DRAWING NAME
M-2.3

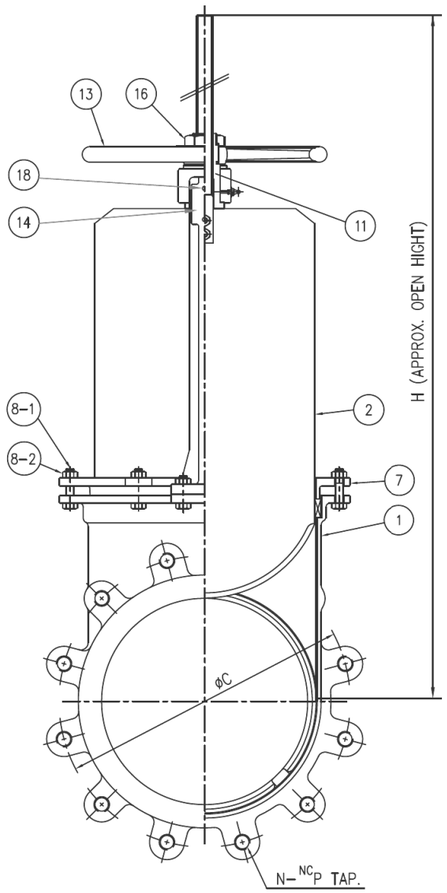

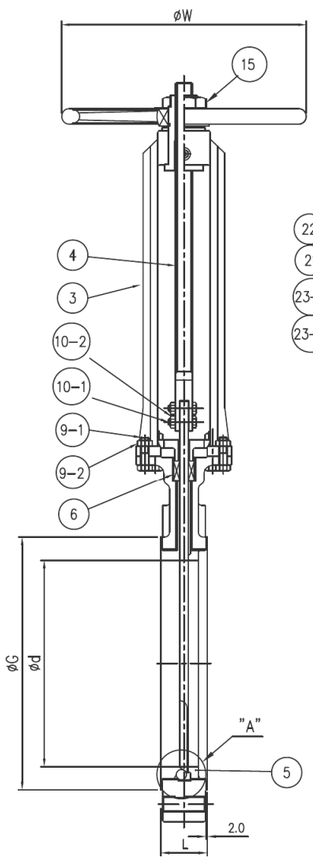

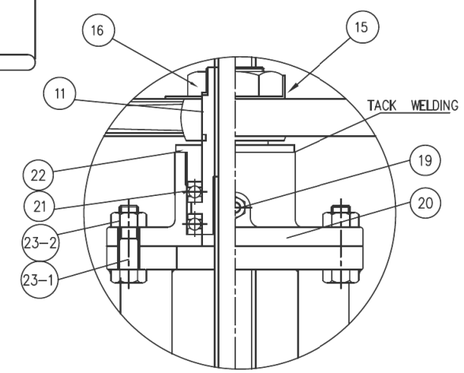

FOR SIZES 18" AND LARGER

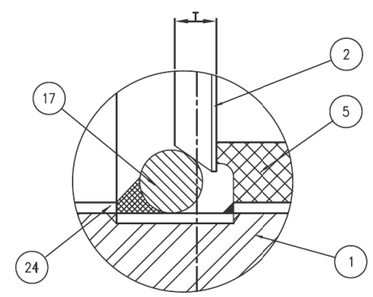

DETAIL "A"

NOTES:

1. MANUFACTURER'S DATA SHEET (FMW™)

Dimensions (inches)

Size	L	Ød	ØG	ØC	N	NCP	T	ØW	H
3	2.00	2.68	5.00	6.00	4	5/8"-11	0.236	7.09	15.75
4	2.00	3.54	6.18	7.50	8	5/8"-11	0.276	7.87	18.90
6	2.25	5.43	8.50	9.50	8	3/4"-10	0.315	9.84	24.41
8	2.75	7.32	10.63	11.75	8	3/4"-10	0.315	11.81	31.50
10	2.75	9.21	12.76	14.25	12	7/8"-9	0.394	13.78	37.80
12	3.00	11.10	15.00	17.00	12	7/8"-9	0.394	15.75	43.31
14	3.00	12.72	16.26	18.75	12	1"-8	0.472	17.72	48.82
16	3.50	14.25	18.50	21.25	16	1"-8	0.472	19.69	53.94
18	3.50	16.22	20.98	22.75	16	1-1/8"-7	0.472	19.69	60.24
20	4.50	18.19	22.99	25.00	20	1-1/8"-7	0.591	21.65	67.72
24	4.50	21.85	27.24	29.50	20	1-1/4"-7	0.591	21.65	79.13

Rev	Date	Description	By

Job No. 647979
Designed MFM
Drawn JD
Checked JZ
Reviewed JZ
Approved JZ
Reg. No. 25118
Plot Date 12-18-14

60% SUBMITTAL NOT FOR CONSTRUCTION

PREPARED BY:
PARSONS
2223 SOUTH MILL AVENUE
SUITE #220
TEMPE, ARIZONA 85281
(602)952-9195
(602)952-9303 fax

GILA RIVER INDIAN COMMUNITY ARIZONA 1939

PIMA MARICOPA IRRIGATION PROJECT
P.O. BOX C
192-A SOUTH ROUTE A STREET
SACATON, AZ 85147
(520)562-6700
(520)562-6791 FAX

REACHES WS-1E AND WS-1F

KNIFE GATE VALVE

DRAWING NAME
M-3.0

NOTES:

1. MANUFACTURER'S DATA SHEET (CLA-VAL™)

Series 33A

Sizes 1" - 2" - 3" - 4" - 6"

Air Release & Vacuum Breaker Valve (Threaded & Flanged)

Threaded

Flanged

- **Automatically Eliminates Air Pockets**
- **Easily Serviced Without Removal from Pipeline**
- **Simple, Effective Patented Design**
- **Corrosion Resistant Materials of Construction**
- **Engineered For Lasting Service**

Designed to protect pipelines and vertical turbine pump applications on offshore platforms from air lock and vacuum collapse, the Cla-Val Model 33A Air Release and Vacuum Breaker Valve eliminates air and prevents vacuum formations in pipelines. A large venting orifice and large float clearances freely exhaust or admits air during pipeline filling or draining.

During normal pipeline operation, air accumulation and buoyancy cause the float ball to lower or lift. As the water level lowers inside the valve, small amounts of accumulated air are released through the small orifice. Once air is released, the patented float poppet system closes drip tight.

Valve servicing is simple because the entire float poppet system, can be replaced without removal of the valve body from the pipeline.

Typical Applications

- **Standard Max. D.W.P. 300 psi (For Higher Operating Pressures Consult Factory)**
- **Transmission Pipeline High Points**
- **Water Treatment Plant Piping High Points**
- **Offshore Platforms**
- **Vertical Turbine Pump Discharge**

Installation

Series 33A Air Release and Vacuum Breaker Valves are typically installed at high points in pipelines for air release, or at anticipated pipeline vacuum occurrence locations. Install Series 33A at regular intervals (approximately 1/2 mile) along uniform grade line pipe. Mount the unit in the vertical position on top of the pipeline, and include an isolation/shutoff valve.

Series 33A is often installed upstream of check valves in pump discharges to vent air during start-up and to allow air reentry when the pump stops.

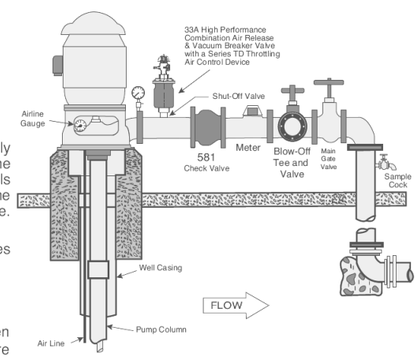

Operation

Air Release Mode—Valve is normally open.
When line is filled or pump started, air is exhausted through the normally open 33A valve. As liquid fills the valve, float ball rises to form a drip-tight closure and remaining air is exhausted through small orifice.

Vacuum Prevent Mode When line pressure drops below positive pressure and the liquid level lowers, the float drops, unseating the valve and allowing air into the line, thus preventing a vacuum.

Note: Available for Sea Water Service See Material Specifications

Dimensions (In Inches)

MODEL 33A - 1", 2", 3", 4" and 6" Sizes

	33A Pressure Class 300 Lb Threaded					33A Pressure Class 150 Lb Flanged (INLET)			
Valve Size	1"	2"	3"	4"		2"	3"	4"	6"
A	9.10	12.44	12.75	12.75		13.88	15.56	15.75	16.38
B	6.25	7.50	9.00	9.00		7.50	9.25	9.25	11.00
E	—	—	—	—		.62	.75	.94	1.00
Inlet (ANSI)	1" NPT	2" NPT	3" NPT	4" NPT		2"	3"	4"	6"
Outlet (NPT)	1" NPT	2" NPT	3" NPT	4" NPT		2"	3"	4"	6"
Number of Holes	—	—	—	—		4	4	8	8
Diameter of Bolts	—	—	—	—		.63	.63	.75	.75
Shipping Wt. (Lb.)	25	29	38	40		39	48	50	70

Pressure Ratings

Valve Size	Orifice Dia.	Standard Maximum Pressure	Materials of Construction
1"	.076"	300 psi	• Ductile Iron ASTM A536 65-45-12 • Epoxy Coated Cast Steel ASTM A 216WCB • ASTM B61 Naval Bronze • ASTM B 148 NI Aluminum Bronze • 316 Stainless Steel • Duplex Stainless Steel • Super Duplex Stainless Steel
2"	.076"	300 psi	
3" & 4"	.125"	300 psi	
3" & 4"	.076"	300 psi	
6"	.076"	300 psi	
Note: Higher Pressures Available upon Request			

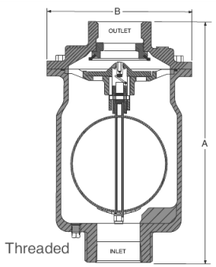

Threaded

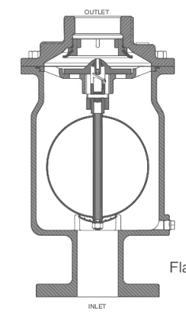

Flanged

Specifications

Standard Internals
Float: Stainless Steel 304SS Standard, T316 or Monel optional (extra cost)
Balance internals parts Stainless Steel and Delrin
Seals Nitrile Rubber or Viton® (extra cost)

Temperature Range
Water to 180° F

Optional:
1. Fusion epoxy lined and coated
2. For Well Service Throttling Device on the Outlet Specify Model TD

When Ordering, Please Specify

1. Catalog No.
2. Valve Size
3. Pressure Rating
4. Materials

Valve Sizing Selection

Large Orifice Air-Vacuum Capacity

Determine anticipated water flow and allowable pressure differential for the pipeline application. Select valve from chart to exhaust or admit air at the same rate as water filling or draining (in CFS). For larger flows, two or more Model 33A's may be installed in parallel

Large Orifice

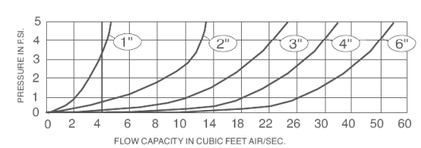

Note: For sizing made easy request:
Cla-Val Selector Slide Rule

Small Orifice Capacity

During pressurized pipeline operation, small pockets of entrapped air will be released through the float actuated 0.076 or .125 inch orifice. Use chart to determine discharge capacity.

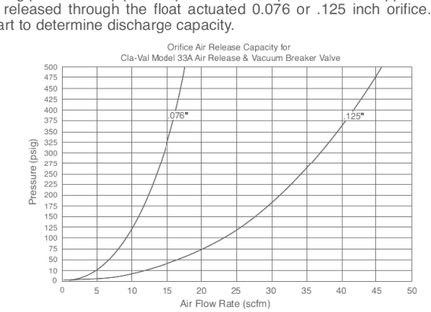

CLA-VAL P.O. Box 1325 • Newport Beach, CA 92659-0325 • Phone: 949-722-4800 • Fax: 949-548-5441 • E-mail: claval@cla-val.com • Website cla-val.com
©Copyright Cla-Val 2013 Printed in USA Specifications subject to change without notice.

Rev	Date	Description	By

Job No. 647979
Designed MFM
Drawn JD
Checked JZ
Reviewed JZ
Approved JZ
Reg. No. 25118
Plot Date 12-18-14

60% SUBMITTAL
NOT FOR CONSTRUCTION

PREPARED BY:
PARSONS
222 SOUTH MILL AVENUE
SUITE #220
TEMPE, ARIZONA 85281
(602)852-9195
(602)952-9303 fax

GILA RIVER INDIAN COMMUNITY
GILA PIMA
1936

PIMA MARICOPA IRRIGATION PROJECT
P.O. BOX C
192-A SOUTH ROUTE A STREET
SACATON, AZ 85147
(520)562-3200
(520)562-6791 FAX

REACHES WS-1E AND WS-1F

ARV

DRAWING NAME
M-4.0

Dimensional Data

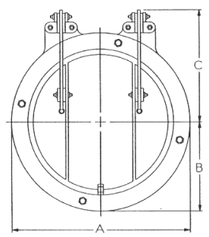

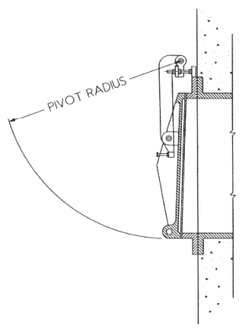

Model 50C Round Opening for Heads to 50 Ft

Opening Size Dia. (In.)	Dimensions (In.)			Pivot Radius (In.)
	A	B	C	
4	9.00	4.50	5.25	7.31
6	11.00	5.50	8.25	11.75
8	13.50	6.75	9.50	14.00
10	16.00	8.00	9.75	15.25
12	19.00	9.50	10.25	16.75
14	21.25	10.63	12.50	19.75
15	22.25	11.13	12.50	20.31
16	23.50	11.75	13.00	21.25
18	24.75	12.50	15.75	25.00
20	27.50	13.75	16.25	26.25
21	28.00	14.00	16.50	27.38
24	32.00	16.00	19.25	31.25
27	34.75	17.38	21.25	36.00

Opening Size Dia. (In.)	Dimensions (In.)			Pivot Radius (In.)
	A	B	C	
30	38.75	19.38	23.25	38.50
36	46.00	23.00	27.50	45.50
42	53.00	26.50	32.50	53.50
48	59.50	29.75	37.75	61.75
54	66.25	33.25	39.75	67.25
60	73.00	36.50	46.00	76.00
66	80.00	40.00	50.00	83.00
72	86.50	43.25	54.25	90.00
78	93.50	46.75	58.25	97.00
84	100.00	50.00	62.25	104.25
90	106.50	53.25	65.50	111.25
96	113.25	56.63	65.50	117.25
108	125.00	62.50	75.13	129.75

Figure 6-2
Heavy-Duty Flap Gate (Model 50C)

Model 50 Square and Rectangular Openings for Heads to 50 Ft

Opening Dia. (In.)	Dimensions (In.)			Pivot Radius (In.)
	A	B	C	
12 x 12	18.00	9.00	11.25	18.25
18 x 18	25.00	12.50	15.75	25.00
24 x 24	32.00	15.00	19.25	31.25
30 x 18	37.00	12.50	15.75	25.00
30 x 30	40.50	18.75	25.75	40.25
36 x 24	44.00	16.00	21.00	31.25
36 x 36	44.00	22.00	27.50	45.25
42 x 30	52.00	19.25	23.25	38.25
42 x 42	52.00	25.00	32.50	53.25
48 x 24	56.00	16.00	19.00	29.25
48 x 36	56.00	22.00	27.50	46.50
48 x 48	58.00	29.00	37.75	61.75
54 x 36	63.00	22.50	27.50	47.50
54 x 54	64.00	32.00	39.75	66.75
60 x 30	68.00	19.00	24.25	39.75

Opening Dia. (In.)	Dimensions (In.)			Pivot Radius (In.)
	A	B	C	
60 x 36	70.00	23.00	29.00	48.75
60 x 48	70.00	29.00	37.75	61.75
60 x 60	70.00	35.00	45.75	75.75
66 x 42	76.00	26.00	32.75	53.50
66 x 66	76.00	38.00	52.00	85.00
72 x 48	82.00	29.00	37.75	61.75
72 x 60	82.00	35.00	45.75	75.75
72 x 72	82.00	41.00	54.75	90.50
84 x 60	94.00	35.00	46.00	75.75
84 x 84	94.00	47.00	62.25	104.00
96 x 60	108.00	36.00	46.00	76.00
96 x 84	108.00	48.00	62.50	104.00
96 x 96	108.00	54.00	69.00	117.00
108 x 108	120.00	60.00	76.00	138.00
120 x 120	132.00	60.00	81.00	149.00

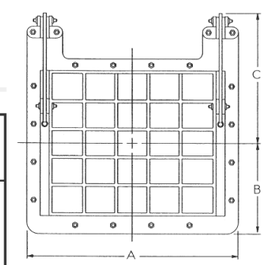

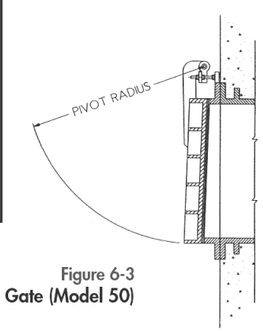

Figure 6-3
Heavy-Duty Flap Gate (Model 50)

NOTES:

1. MANUFACTURER'S DATA SHEET (HYDRO GATE)

Rev	Date	Description	By

Job No. 647979
Designed MFM
Drawn JD
Checked JZ
Reviewed JZ
Approved JZ
Reg. No. 25118
Plot Date 12-18-14

60% SUBMITTAL NOT FOR CONSTRUCTION

PREPARED BY:
PARSONS
222 SOUTH MILL AVENUE
SUITE #220
TEMPE, ARIZONA 85281
(602)852-9195
(602)952-9303 fax

GILA RIVER INDIAN COMMUNITY ARIZONA 1939

PIMA MARICOPA IRRIGATION PROJECT
P.O. BOX C
192-A SOUTH ROUTE A STREET
SACATON, AZ 85147
(520)562-6700
(520)562-6791 FAX

REACHES WS-1E AND WS-1F

FLAP GATE DETAIL

DRAWING NAME
M-5.0

TYPICAL POST DIMENSIONS								
FABRIC HEIGHT	CORNER, END, INTERMEDIATE, GATE, LATCH AND PULL POSTS				LINE POSTS			
		ROUND	ROLL FORMED			ROUND		ROLL FORMED
	LENGTH	(OD)	⌊	⊡	LENGTH	(OD)	H-SECTION	⊡
72"	9'-0"	2.375'	3.50"x3.50"	2.25"x1.70"	8'-6"	1.900"	1.875"x1.625"	1.875"x1.625"

TYPICAL GATE DIMENSIONS		
GATE LEAF WIDTH	VERTICAL BRACES	GATE POST SIZE
H		OD
3' TO 8'	0	2.8750"
8' TO 16'	1	4.0000"

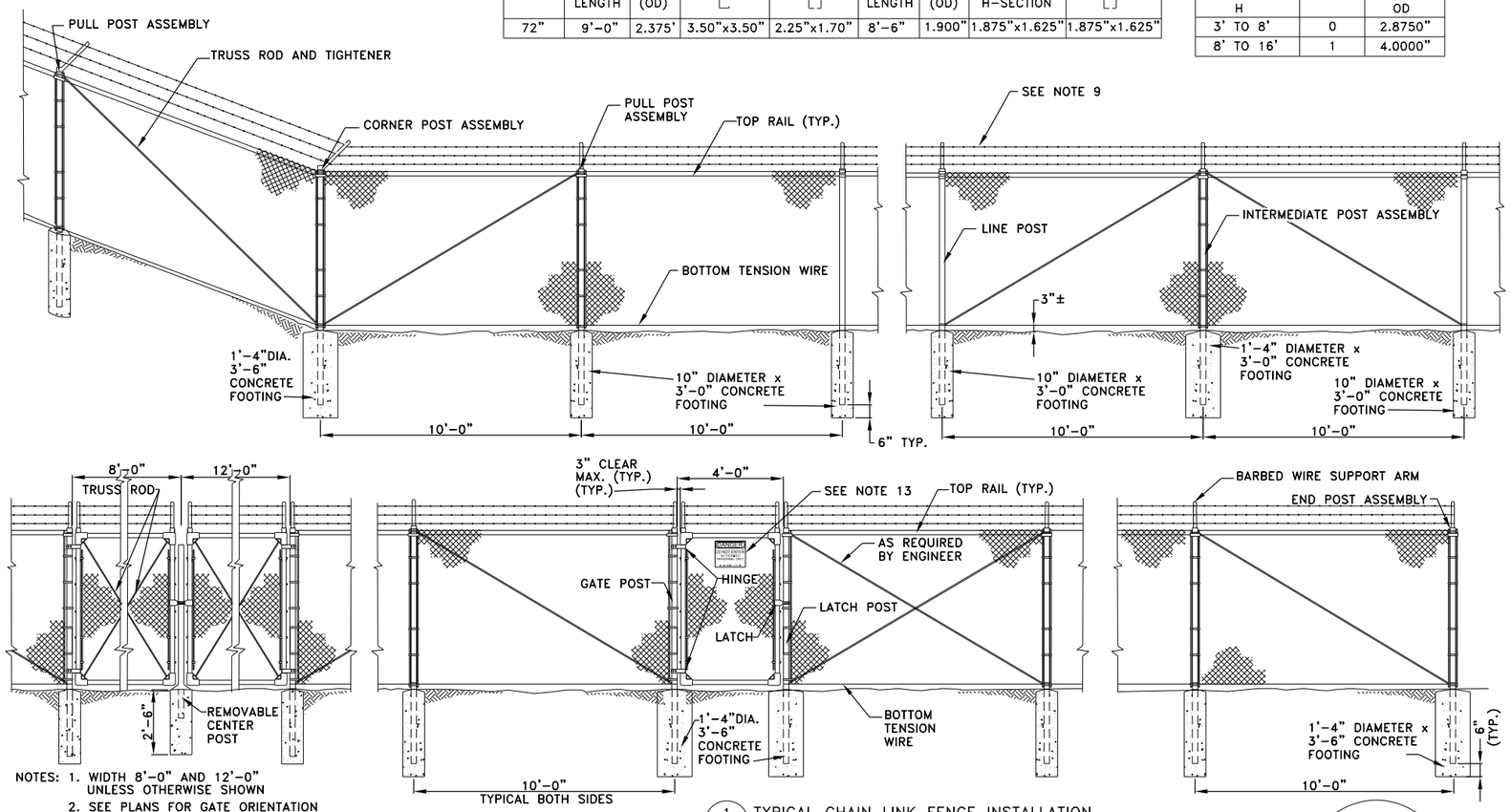

NOTES: 1. WIDTH 8'-0" AND 12'-0" UNLESS OTHERWISE SHOWN
2. SEE PLANS FOR GATE ORIENTATION

2 — DOUBLE SWING GATE DETAIL
SCALE: 3/8"=1'-0"

1 — TYPICAL CHAIN LINK FENCE INSTALLATION
SCALE: 3/8"=1'-0"

GENERAL NOTES:

1. POSTS SHALL BE ROUND, H-SECTION, OR ROLL-FORMED AND SHALL CONFORM TO THE NORMAL DIMENSIONAL REQUIREMENTS SHOWN. DIMENSIONAL TOLERANCES FOR TOLERANCES FOR ALL SHAPES SHALL BE ACCORDING TO ASTM A-500. IN ADDITION, THE MATERIAL OF WHICH POSTS ARE FABRICATED SHALL HAVE A NOMINAL THICKNESS, BEFORE GALVANIZING, OF NOT LESS THAN 0.111" FOR LINE POSTS AND 0.130" FOR TERMINAL POSTS.
2. CHAIN LINK FABRIC SHALL BE EITHER ZINC-COATED OR ALUMINUM-COATED STEEL WIRE FENCE FABRIC. ZINC-COATED STEEL FABRIC SHALL CONFORM TO THE REQUIREMENTS OF ASTM A392, CLASS 1 COATING. ALUMINUM-COATED STEEL FABRIC SHALL CONFORM TO THE REQUIREMENTS OF ASTM A491, WITH A MINIMUM WEIGHT OF COATING OF 0.40 OUNCE PER SQUARE FOOT OF WIRE SURFACE AREA. FABRIC SHALL BE 9 GAUGE.
3. TENSION WIRES SHALL BE 7 GAUGE (0.177 INCH DIAMETER) COIL SPRING STEEL WIRE WITH A MINIMUM TENSILE STRENGTH OF 75,000 PSI AND SHALL BE ZINC-COATED OR ALUMINUM-COATED.
4. ADJUSTABLE TRUSS RODS SHALL BE 3/8 INCH DIAMETER. TRUSS TIGHTENERS SHALL HAVE A STRAP THICKNESS OF NOT LESS THAN 1/4 INCH.
5. STRETCHER BARS SHALL BE 3/16 INCH BY 3/4 INCH STEEL FLAT BARS. STRETCHER BAR BANDS SHALL BE 1/8 INCH BY ONE INCH PREFORMED STEEL BANDS.
6. BOTTOM TENSION WIRE SHALL BE 3 INCHES FROM TOP OF CROWN ON CONCRETE FOOTINGS.
7. INTERMEDIATE POST ASSEMBLIES SHALL BE SPACED AT 500 FOOT INTERVALS OR MIDWAY BETWEEN PULL POSTS WHEN THE DISTANCE BETWEEN SUCH POSTS IS LESS THAN 1,000 FEET AND MORE THAN 500 FEET.
8. CONCRETE DESIGN STRENGTH: f'c = 3,000 PSI MIN.
9. BARBED WIRE FOR USE WITH CHAIN LINK FENCE SHALL BE 3 STRANDS OF 12 1/2 GAUGE STEEL WIRE WITH 4 POINT 14 GAUGE BARBS SPACED 5 INCHES APART AND SHALL BE ZINC-COATED. ZINC-COATED STEEL WIRE SHALL CONFORM TO THE REQUIREMENTS OF ASTM A121, CLASS 1 COATING. SEE SPEC. 02444 ART 2.04.A. RODS SEE SPEC. SECTION 02444 ART 2.04.E.
10. BARBED WIRE SUPPORT ARM SHALL BE FABRICATED FROM COMMERCIAL QUALITY STEEL, AND SHALL BE ZINC-COATED IN ACCORDANCE WITH THE REQUIREMENTS OF AASHTO M111.
11. THE TYPICAL STRUCTURE CONNECTION DETAILS APPLY AT THE HEADWALLS OF INVERTED SIPHONS, RECTANGULAR INCLINE DROP STRUCTURES, AND CHECK STRUCTURE.
12. FENCE OVERHANGS SHALL BE LOCATED AT ENDS OF CHAIN LINK FENCE AROUND STRUCTURES. FENCE OVERHANGS AT UPSTREAM END OF STRUCTURES SHALL BE LOCATED OR AS SHOWN ON PLANS.
13. (– / M-13.0) FOR SIGN DETAILS.
14. INSTALL CHAIN LINK FENCE OFF OF LINING OR STRUCTURE WALLS AS SHOWN
15. ANTI-THEFT SLATS THROUGH CHAIN LINK FENCE ARE REQUIRED
16. SCORE BOLTS AFTER TIGHTENING TO PREVENT VANDALISM
17. FENCE SHALL BE GROUNDED USING EMBEDDED PLATES, RODS OR OTHER APPROVED MEANS.

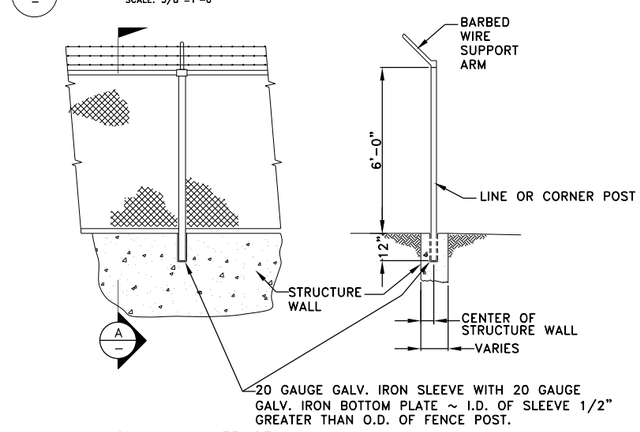

3 — CHAIN LINK FENCE – TYPICAL STRUCTURE CONNECTION (FOR WALLS ≥ 10" THICKNESS ONLY)
SCALE: 3/8"=1'-0"

A — SECTION
SCALE: 3/8"=1'-0"

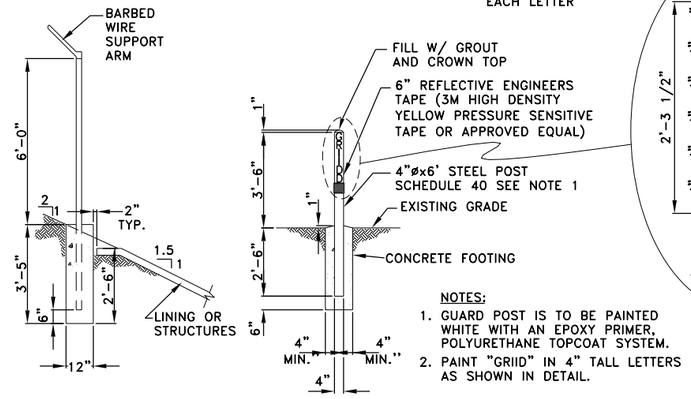

NOTES:
1. GUARD POST IS TO BE PAINTED WHITE WITH AN EPOXY PRIMER, POLYURETHANE TOPCOAT SYSTEM.
2. PAINT "GRIID" IN 4" TALL LETTERS AS SHOWN IN DETAIL.

4 — TYPICAL FENCE POST INSTALLATION ADJACENT TO LINING OR STRUCTURES
SCALE: 3/8"=1'-0"

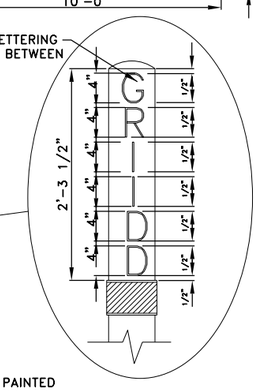

5 — TYPICAL GUARD POST
SCALE: 3/4"=1'-0"

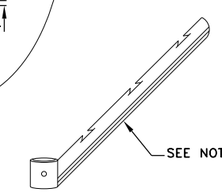

6 — BARBED WIRE SUPPORT ARM
NO SCALE

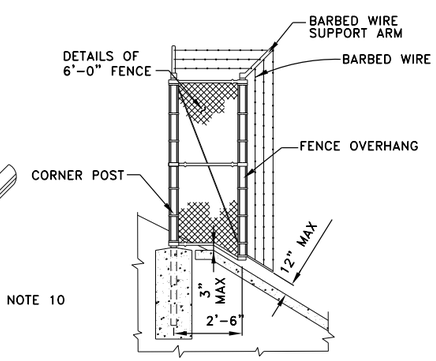

7 — TYPICAL FENCE OVERHANG
SCALE: 3/8"=1'-0"

Rev	Date	Description	By

Job No. 647979
Designed MFM
Drawn JD
Checked JZ
Reviewed JZ
Approved JZ
Reg. No. 25118
Plot Date 12-18-14

60% SUBMITTAL NOT FOR CONSTRUCTION

PREPARED BY:
PARSONS
222 SOUTH MILL AVENUE
SUITE #220
TEMPE, ARIZONA 85281
(602)852-9195
(602)952-9303 fax

GILA RIVER INDIAN COMMUNITY ARIZONA

PIMA MARICOPA IRRIGATION PROJECT
P.O. BOX C
192-A SOUTH ROUTE A STREET
SACATON, AZ 85147
(520)562-6700
(520)562-6791 FAX

REACHES WS-1E AND WS-1F

CHAIN LINK FENCE AND GUARD POST DETAIL

DRAWING NAME
M-6.0

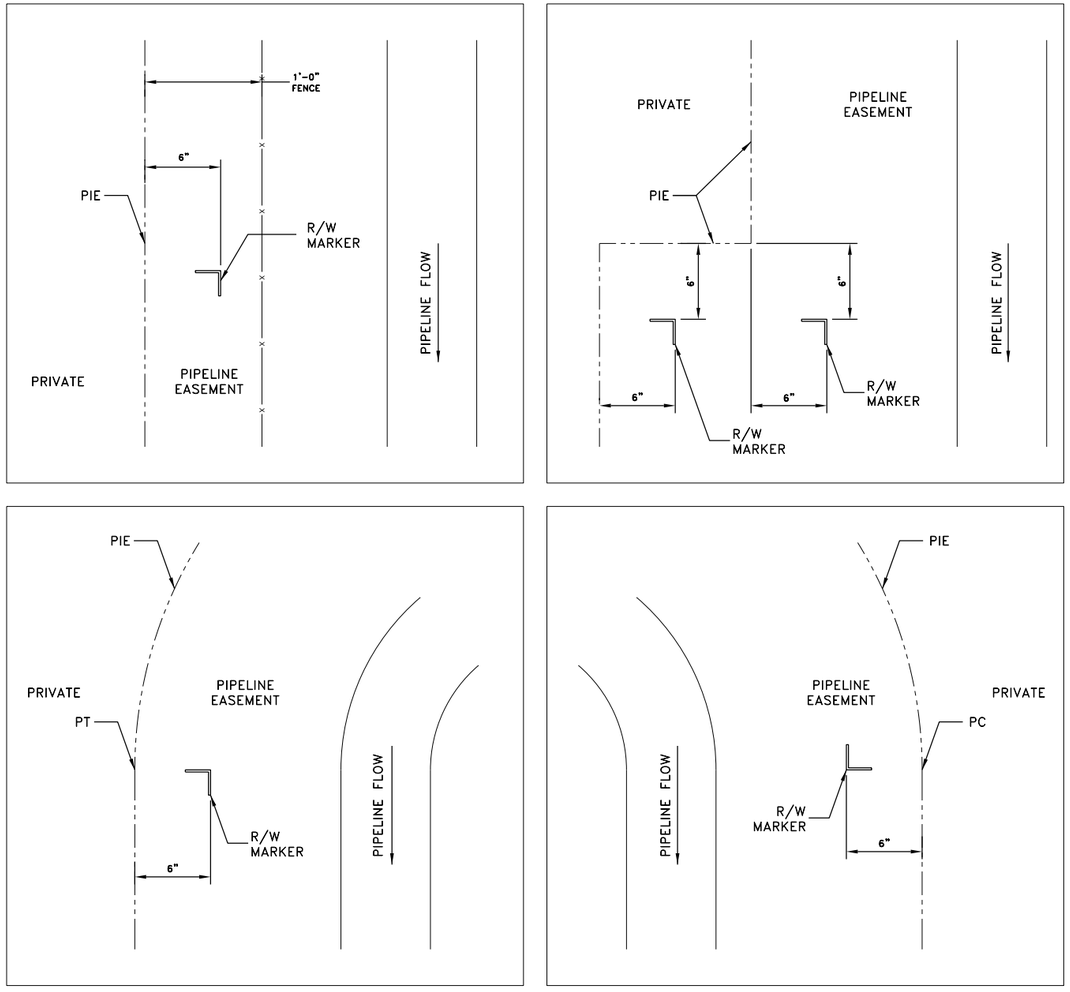

R/W MARKER PLACEMENT

SCALE: NONE

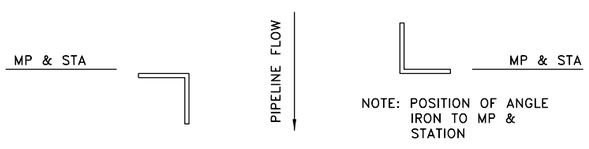

R/W MARKER LAYOUT

SCALE: NONE

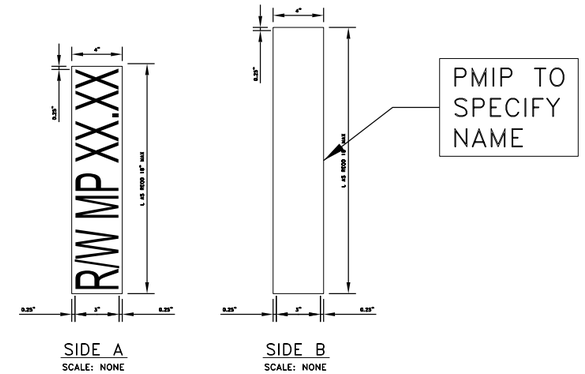

SIDE A

SCALE: NONE

SIDE B

SCALE: NONE

PIE MARKER STENCILING

SCALE: NONE

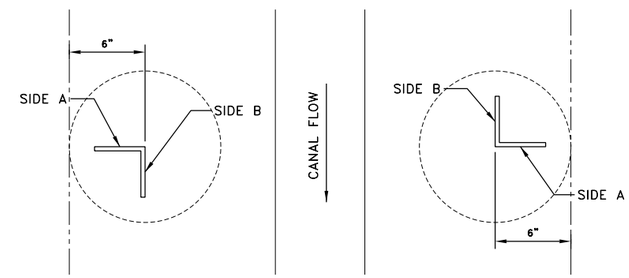

PIE MARKER ORIENTATION

SCALE: NONE

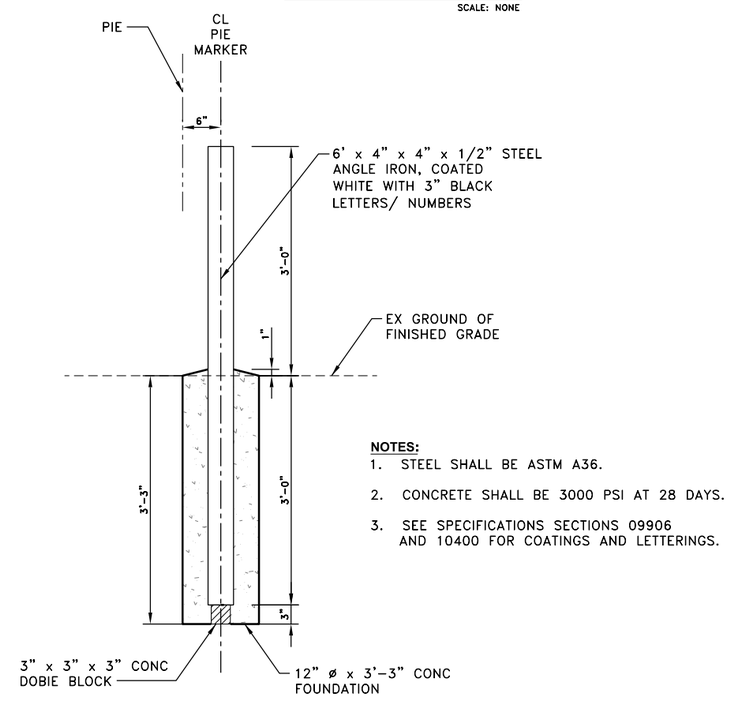

NOTES:

1. STEEL SHALL BE ASTM A36.
2. CONCRETE SHALL BE 3000 PSI AT 28 DAYS.
3. SEE SPECIFICATIONS SECTIONS 09906 AND 10400 FOR COATINGS AND LETTERINGS.

PIE MARKER DETAILS

SCALE: NONE

Rev	Date	Description	By

Job No. 647979
Designed MFM
Drawn JD
Checked JZ
Reviewed JZ
Approved JZ
Reg. No. 25118
Plot Date 12-18-14

60% SUBMITTAL NOT FOR CONSTRUCTION

PREPARED BY:
PARSONS
222 SOUTH MILL AVENUE
SUITE #220
TEMPE, ARIZONA 85281
(602)852-9195
(602)952-9303 fax

GILA RIVER INDIAN COMMUNITY ARIZONA 1939

PIMA MARICOPA IRRIGATION PROJECT
P.O. BOX C
192-A SOUTH ROUTE A STREET
SACATON, AZ 85147
(520)562-6700
(520)562-6791 FAX

REACHES WS-1E AND WS-1F

REACHES WS1E & WS1F PIE MARKER
SHEET 1 OF 2

DRAWING NAME
M-7.0

PIE MARKER SCHEDULE

TYPE	MARKER STATION	NO. MARKERS (LEFT AND RIGHT)
P.O.B.		
PC		
PT		
PC		
PT		
PC		
PT		
PC		
PT		
PC		
PT		
PC		
PT		
PC		
PT		
PC		
PT		
PC		
PT		
PI		
PI		
PC		
PT		
PC		
PT		
PC		
PT		
P.O.E.		
	TOTAL	

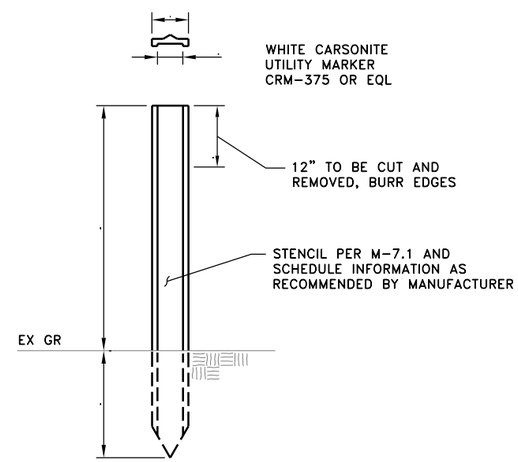

FLEX MARKER
SCALE: NONE

NOTES:
1. SEE THIS SHEET FOR ALL PIE FLEXMARKER DETAILS.
   SEE SHEET M-7.1 FOR STANDARD PIE MARKER DETAILS.
2. FLEX MARKER USED ONLY WHERE INDICATED WITH
   IN SCHEDULE.

Rev	Date	Description	By

Job No. 647979
Designed MFM
Drawn JD
Checked JZ
Reviewed JZ
Approved JZ
Reg. No. 25118
Plot Date 12-18-14

60% SUBMITTAL
NOT FOR
CONSTRUCTION

PREPARED BY:
PARSONS
222 SOUTH MILL AVENUE
SUITE #220
TEMPE, ARIZONA 85281
(602)852-9195
(602)952-9303 fax

PIMA MARICOPA IRRIGATION PROJECT
P.O. BOX C
192-A SOUTH ROUTE A STREET
SACATON, AZ 85147
(520)562-6700
(520)562-6791 FAX

REACHES WS-1E AND WS-1F

REACHES WS1E & WS1F PIE MARKER
SHEET 2 OF 2

DRAWING NAME
M-7.1

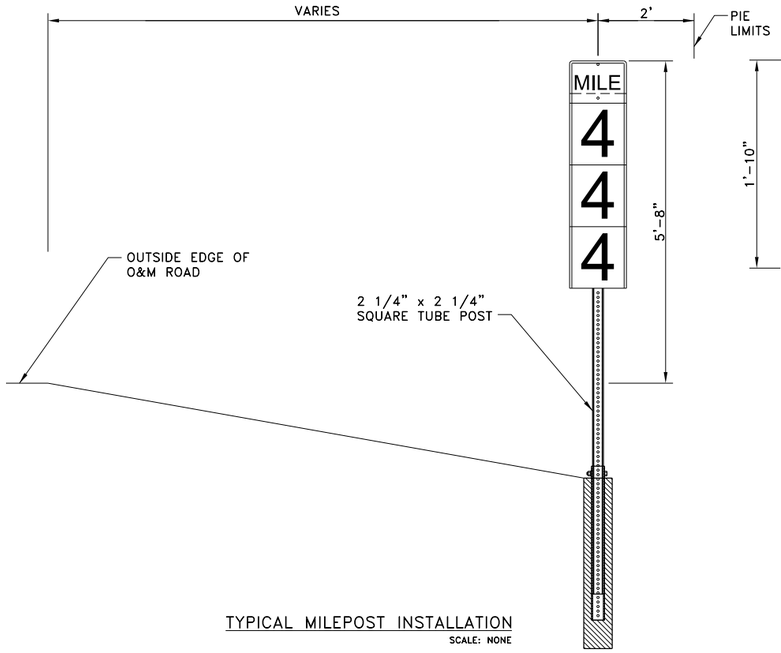

TYPICAL MILEPOST INSTALLATION
SCALE: NONE

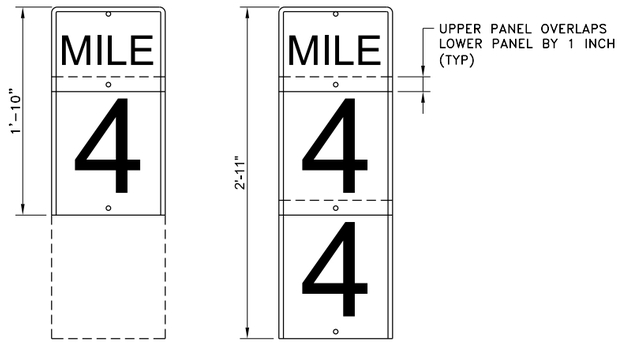

STANDARD NUMERAL POSITION
SCALE: NONE

NOTES:

1. ALL DIMENSIONS ARE IN INCHES EXCEPT AS NOTED.
2. MILEPOSTS SHALL BE PLACED ON THE RIGHT SIDE OF THE ROADWAY WITH PANELS FACING PERPENDICULAR TO CANAL CENTERLINE. IF THEY CAN NOT BE PLACED WITHIN 100 FOOT ACCURACY, THEY SHALL BE OMITTED.
3. THERE SHALL BE 2 MARKERS PER POST AT EACH INSTALLATION LOCATION WITH TEXT FACING OUTWARD.
4. ANY NEW MILEPOST SHALL BE INSTALLED IN THE SAME LONGITUDINAL LOCATION AS THE CORRESPONDING EXISTING MILEPOST.
5. MILEPOST PLATES SHALL BE FABRICATED FROM 0.062" THICK 3003-H14. 5052-H38, OR 6061-T6 ALUMINUM.
6. ALL SURFACES TO BE COVERED WITH REFLECTIVE SHEETING SHALL BE PREPARED IN ACCORDANCE WITH THE RECOMMENDATIONS OF THE SHEETING MANUFACTURER.
7. ALL LETTERS SHALL BE 4" C-SERIES. ALL NUMERALS SHALL BE 10" C-SERIES.
8. PANEL SURFACES NOT COVERED WITH SHEETING SHALL BE ETCHED TO REDUCE GLARE FROM REFLECTED SUNLIGHT.
9. POSTS SHALL BE PERFORATED SQUARE-TUBE FORMED FROM 0.105" ASTM A-366 COLD ROLLED CARBON STEEL. THE SQUARE TUBES SHALL BE WELDED DIRECTLY IN THE CORNERS BY HIGH-FREQUENCY RESISTANCE WELDING OR EQUAL. POSTS SHALL BE EXTERNALLY SCORED TO CONFORM TO STANDARD CORNER RADII OF 7/16" AND SHALL BE GALVANIZED TO CONFORM TO THE REQUIREMENTS OF ASTM A-525 COATING DESIGN G-90.
10. PANELS SHALL BE ATTACHED TO POSTS USING 7/16" SLOTTED HEAD BOLTS WITH HEX NUT, FLAT WASHER, LOCK WASHER, AND NYLON WASHER. FACE OF BOLT AND NYLON WASHER SHALL BE THE SAME COLOR AS THE MILEPOST PANEL. THE MAXIMUM OUTSIDE DIAMETER OF ALL WASHERS SHALL BE 7/8".
11. ALL HARDWARE SHALL CONFORM TO THE REQUIREMENTS OF ASTM A-307, CLASS A.
12. ALL CONCRETE SHALL BE UTILITY GRADE OR BETTER.

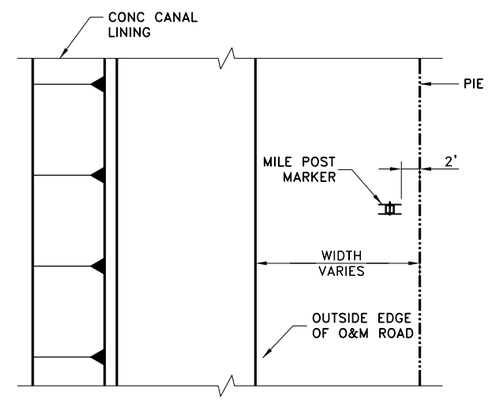

TYPICAL MILE POST INSTALLATION
SCALE: NONE

TYPICAL MILE POST MARKER SCHEDULE

CANAL STATION	MILE NUMBER
*	*
*	*
*	*
*	*

*LOCATIONS TO BE DETERMINED MAXIMUM OF 4 REQ'D

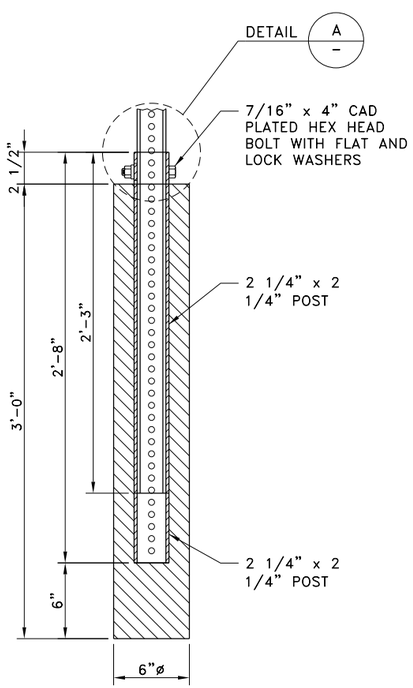

FOUNDATION DETAILS
SCALE: NONE

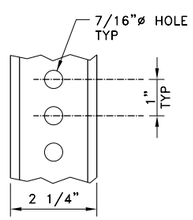

TYPICAL POST DETAIL
SCALE: NONE

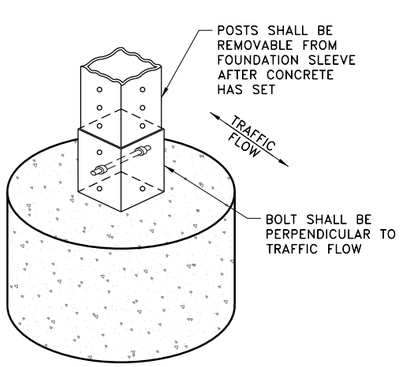

A DETAIL
SCALE: NONE

MILE POST MARKER
SCALE: NONE

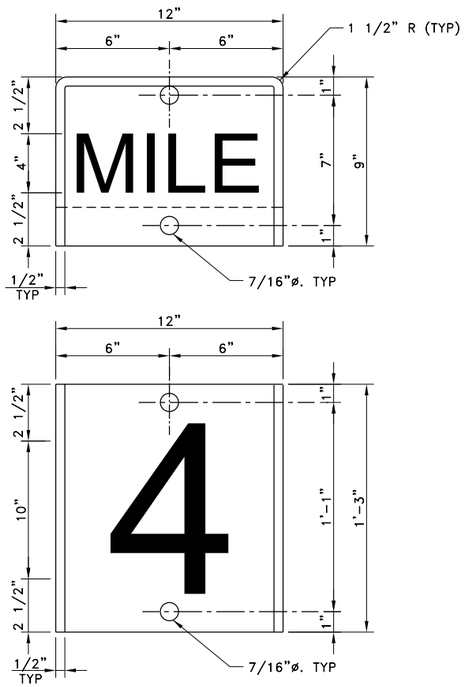

PANEL DETAILS
SCALE: NONE

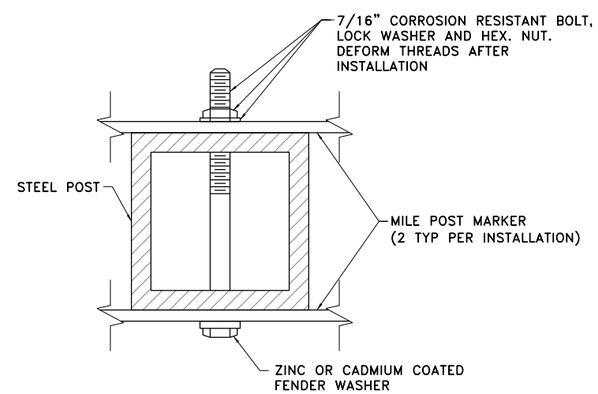

TYPICAL MOUNTING DETAIL FOR BACKPLATE
SCALE: NONE

Rev	Date	Description	By

Job No. 647979
Designed MFM
Drawn JD
Checked JZ
Reviewed JZ
Approved JZ
Reg. No. 25118
Plot Date 12-18-14

60% SUBMITTAL NOT FOR CONSTRUCTION

PREPARED BY:
PARSONS
223 SOUTH MILL AVENUE
SUITE #220
TEMPE, ARIZONA 85281
(602)952-9195
(602)952-9303 fax

GILA RIVER INDIAN COMMUNITY ARIZONA 1939

PIMA MARICOPA IRRIGATION PROJECT
P.O. BOX C
192-A SOUTH ROUTE A STREET
SACATON, AZ 85147
(520)562-6700
(520)562-6791 FAX

REACHES WS-1E AND WS-1F

MILE POST MARKER

DRAWING NAME
M-8.0

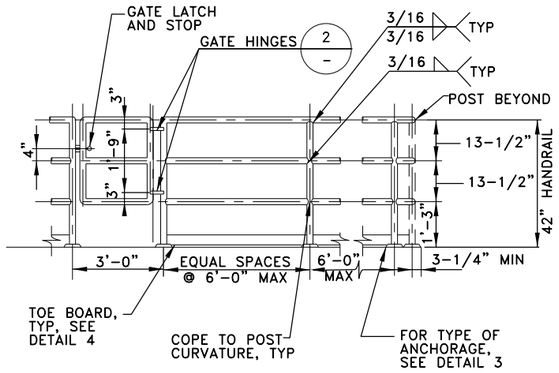

ELEVATION

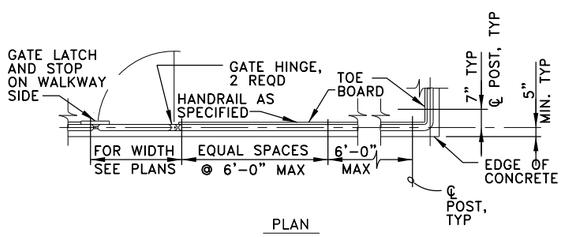

PLAN

1 THREE-RAIL HANDRAIL
NOT TO SCALE

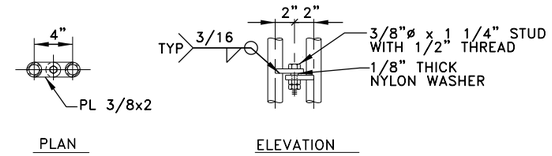

PLAN ELEVATION

NOTES:

AT CONTRACTOR'S OPTION FABRICATE HINGES OR PROVIDE OTHER HINGES AS SPECIFIED. FINISH AFTER ALL WELDING AS SPECIFIED.

2 HINGE
NOT TO SCALE

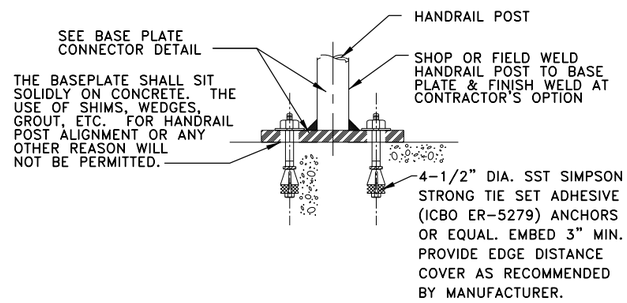

3 HANDRAIL POST ANCHORAGE
NOT TO SCALE

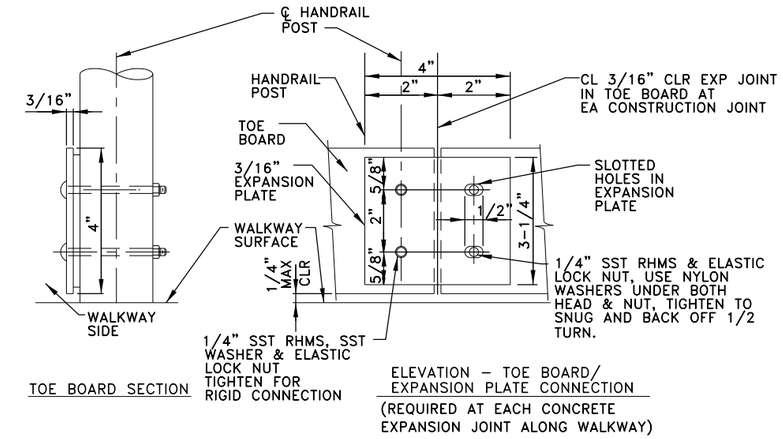

TOE BOARD SECTION

ELEVATION – TOE BOARD/ EXPANSION PLATE CONNECTION
(REQUIRED AT EACH CONCRETE EXPANSION JOINT ALONG WALKWAY)

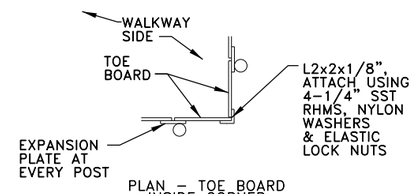

PLAN – TOE BOARD INSIDE CORNER
(OUTSIDE CORNER SIMILAR)

NOTES:

1. WHERE BOLTED BASE PLATE EXTENDS ABOVE WALKWAY SURFACE, NOTCH TOE BOARD TO FIT AROUND BASE PLATE WITH MAXIMUM OF 1/4" GAP.
2. TOE BOARD TO BE MOUNTED ON WALKWAY SIDE OF HANDRAIL.
3. RHMS = ROUND HEAD MACHINE SCREW AS SPECIFIED, SST.
4. TOE BOARD REQ'D ON WALKWAYS ONLY.

4 HANDRAIL TOE BOARD
NOT TO SCALE

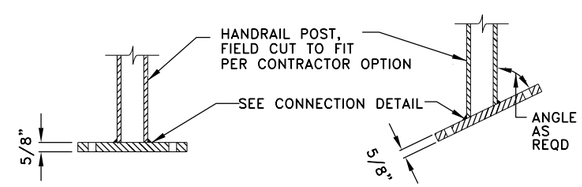

SECTION STAIR SECTION

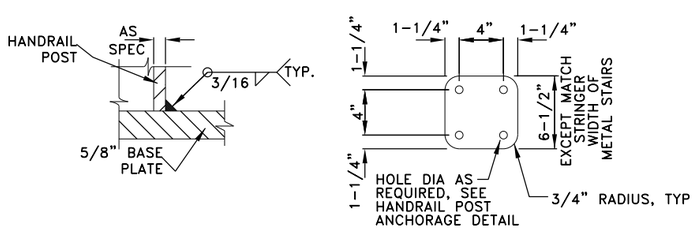

CONNECTION DETAIL BASE PLATE

5 HANDRAIL POST CONNECTOR FOR BOLTED BASE PLATE
NOT TO SCALE

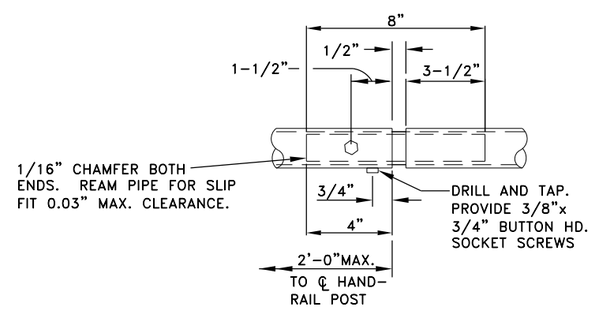

SPLICE
(REQUIRED AT EACH CONCRETE EXPANSION JOINT)

6
NOT TO SCALE

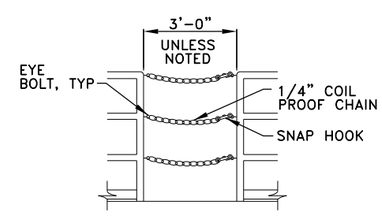

NOTES:

1. SPLICE HANDRAILS AS REQUIRED WITH SPLICE LOCKS. PROVIDE SPLICE LOCK SUITABLE FOR EXPANSION JOINT AT 50 FT. CENTERS MAXIMUM, AND AT EXPANSION JOINTS IN THE CONCRETE.
2. CONTRACTOR MUST HAVE OPTIONS FOR POST CONNECTIONS APPROVED BY ENGINEER FOR EACH SITE.

7 SAFETY CHAIN
NOT TO SCALE

Rev	Date	Description	By

Job No. 647979
Designed MFM
Drawn JD
Checked JZ
Reviewed JZ
Approved JZ
Reg. No. 25118
Plot Date 12-18-14

60% SUBMITTAL NOT FOR CONSTRUCTION

PREPARED BY:
PARSONS
222 SOUTH MILL AVENUE
SUITE #220
TEMPE, ARIZONA 85281
(602)852-9195
(602)952-9303 fax

GILA RIVER INDIAN COMMUNITY ARIZONA 1939

PIMA MARICOPA IRRIGATION PROJECT
P.O. BOX C
192-A SOUTH ROUTE A STREET
SACATON, AZ 85147
(520)562-6700
(520)562-6791 FAX

REACHES WS-1E AND WS-1F

HANDRAIL DETAILS

DRAWING NAME
M-9.0

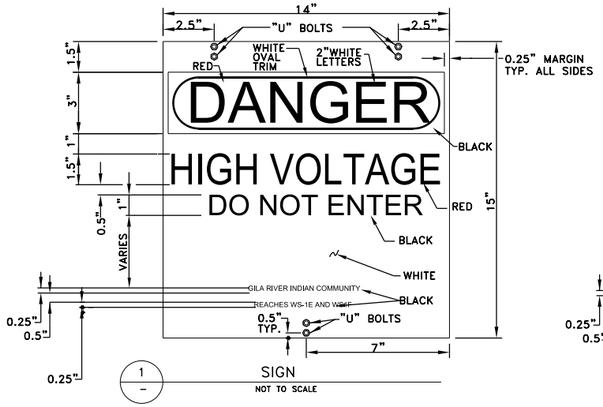

1 SIGN
NOT TO SCALE

SIGN SHALL BE INSTALLED ON EACH FACE OF ELECTRICAL BUILDING AND ON EACH CHAIN LINK FENCE GATE AT EACH ELECTRICAL FENCE ENCLOSURE. (SEE NOTE 1)

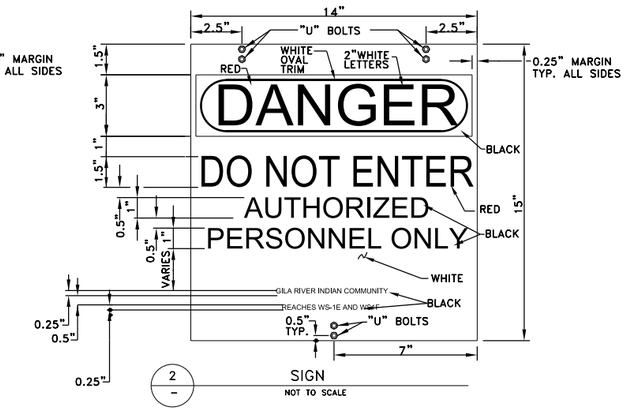

2 SIGN
NOT TO SCALE

SIGN SHALL BE INSTALLED ON EACH CHAIN LINK FENCE GATE. (SEE NOTE 1)

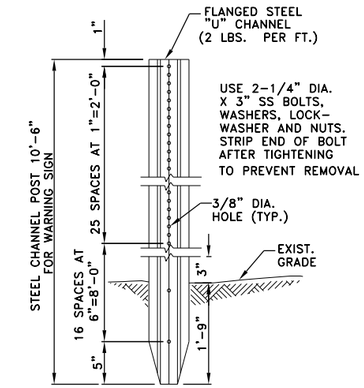

3 SIGN BASE – DETAIL
NOT TO SCALE

POST SHALL BE INSTALLED AT ALL O&M ROAD ENTRANCES. SIGNS IN DETAILS 4 AND 5 SHALL BE ATTACHED TO POST.

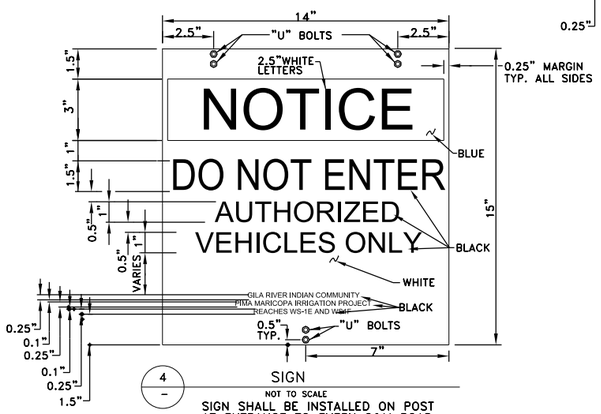

4 SIGN
NOT TO SCALE

SIGN SHALL BE INSTALLED ON POST AT ENTRANCE TO EVERY O&M ROAD

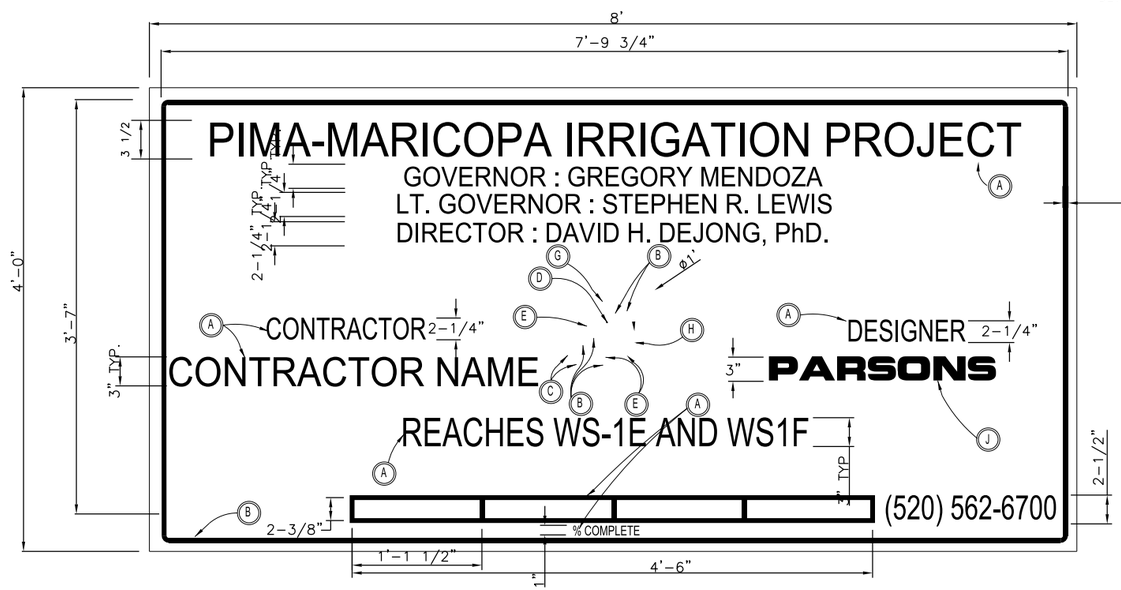

5 PROJECT SIGN
NOT TO SCALE

SIGNS SHALL BE INSTALLED PER INSTRUCTION OF ENGINEER. (SEE NOTE 3)

COLOR TABLE	
A	DARK BROWN
B	LIGHT BROWN
C	YELLOW
D	GOLD
E	KELLY GREEN
F	DARK GREEN
G	SKY BLUE
H	MINT GREEN
I	MAROON
J	PANTONE 108

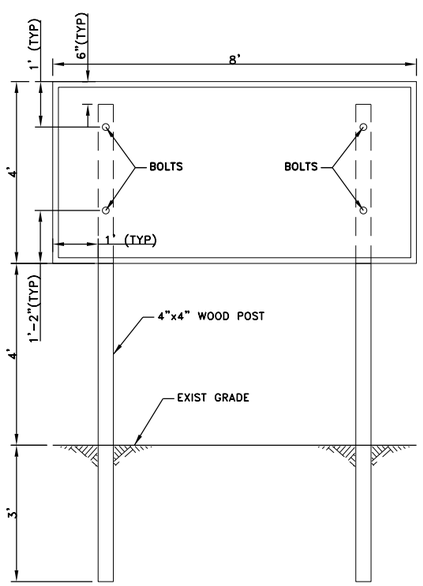

6 PROJECT SIGN BASE DETAIL
NOT TO SCALE

1. SIGNS SHALL BE ATTACHED TO FENCE GATE WITH 3- 1/4" PIPE "U" BOLTS, FLAT WASHERS, LOCK WASHERS, AND NUTS. BOLTS, NUTS, AND WASHERS SHALL BE ZINC COATED AND LOCATED AS SHOWN ON DETAIL. TOP OF SIGN SHALL BE 5' FROM GROUND ELEVATION. BOLTS SHALL BE SCORED AFTER NUT INSTALLATION TO PREVENT REMOVAL. MAXIMUM LENGTH OF PROTRUDING BOLT AFTER NUT INSTALLATION SHALL BE 1/4".
2. BOLT ATTACHMENTS SHALL NOT COVER SIGN LETTERING.
3. LABELING FOR REACH DESIGNATION ON PROJECT IDENTIFICATION SIGNS SHALL BE PER ENGINEER INSTRUCTIONS. CONTRACTOR SHALL PROVIDE A TOTAL OF 2 PROJECT SIGNS.

Rev	Date	Description	By

Job No. 647979
Designed MFM
Drawn JD
Checked JZ
Reviewed JZ
Approved JZ
Reg. No. 25118
Plot Date 12-18-14

60% SUBMITTAL NOT FOR CONSTRUCTION

PREPARED BY:
PARSONS
222 SOUTH MILL AVENUE
SUITE #220
TEMPE, ARIZONA 85281
(602)852-9195
(602)952-9303 fax

GILA RIVER INDIAN COMMUNITY ARIZONA

PIMA MARICOPA IRRIGATION PROJECT
P.O. BOX C
192-A SOUTH ROUTE A STREET
SACATON, AZ 85147
(520)562-6700
(520)562-6791 FAX

REACHES WS-1E AND WS-1F

PROJECT IDENTIFICATION AND MISCELLANEOUS SIGN DETAILS

DRAWING NAME
M-10.0

TO BE DEVELOPED

FOR 90% SUBMITTAL

Job No.	647979
Designed	MFM
Drawn	JD
Checked	JZ
Reviewed	JZ
Approved	JZ
Reg. No.	25118
Plot Date	12-18-14

Rev	Date	Description	By

60% SUBMITTAL
NOT FOR CONSTRUCTION

PREPARED BY:
PARSONS
222 SOUTH MILL AVENUE
SUITE #220
TEMPE, ARIZONA 85281
(602)852-9195
(602)952-9303 fax

PIMA MARICOPA IRRIGATION PROJECT
P.O. BOX G
192 A SOUTH ROUTE A STREET
SACATON, AZ 85147
(520)562-6700
(520)562-6791 FAX

REACHES WS-1E AND WS-1F

TRAFFIC CONTROL SCHEMATIC

DRAWING NAME
TC-1.1

TO BE DEVELOPED

FOR 90% SUBMITTAL

Rev	Date	Description	By

Job No. 647979
Designed MFM
Drawn JD
Checked JZ
Reviewed JZ
Approved JZ
Reg. No. 25118
Plot Date 12-18-14

60% SUBMITTAL
NOT FOR CONSTRUCTION

PREPARED BY:
PARSONS
222 SOUTH MILL AVENUE
SUITE #220
TEMPE, ARIZONA 85281
(602)852-9195
(602)952-9303 fax

GILA RIVER INDIAN COMMUNITY
ARIZONA 1933

PIMA MARICOPA IRRIGATION PROJECT
P.O. BOX G
192 A SOUTH ROUTE A STREET
SACATON, AZ 85147
(520)562-6700
(520)562-6791 FAX

REACHES WS-1E AND WS-1F

TRAFFIC CONTROL QUANTITIES

DRAWING NAME
TC-1.2

TO BE DEVELOPED

FOR 90% SUBMITTAL

Job No.	647979
Designed	MFM
Drawn	JD
Checked	JZ
Reviewed	JZ
Approved	JZ
Reg. No.	25118
Plot Date	12-18-14

Rev	Date	Description	By

60% SUBMITTAL
NOT FOR CONSTRUCTION

PREPARED BY:
PARSONS
222 SOUTH MILL AVENUE
SUITE #220
TEMPE, ARIZONA 85281
(602)852-9195
(602)952-9303 fax

PIMA MARICOPA IRRIGATION PROJECT
P.O. BOX G
1152 SOUTH ROUTE A STREET
SACATON, AZ 85147
(520)562-6700
(520)562-6791 FAX

REACHES WS-1E AND WS-1F

TRAFFIC CONTROL DETAILS

DRAWING NAME
TC-1.3

TO BE DEVELOPED

FOR 90% SUBMITTAL

Job No.	647979
Designed	MFM
Drawn	JD
Checked	JZ
Reviewed	JZ
Approved	JZ
Reg. No.	25118
Plot Date	12-18-14

Rev	Date	Description	By

60% SUBMITTAL
NOT FOR CONSTRUCTION

PREPARED BY:
PARSONS
222 SOUTH MILL AVENUE
SUITE #220
TEMPE, ARIZONA 85281
(602)852-9195
(602)952-9303 fax

PIMA MARICOPA IRRIGATION PROJECT
P.O. BOX G
1152 A SOUTH ROUTE A STREET
SACATON, AZ 85147
(520)562-6700
(520)562-6791 FAX

REACHES WS-1E AND WS-1F

TRAFFIC CONTROL

DRAWING NAME
TC-1.4

TO BE DEVELOPED

FOR 90% SUBMITTAL

Job No.	647979
Designed	MFM
Drawn	JD
Checked	JZ
Reviewed	JZ
Approved	JZ
Reg. No.	25118
Plot Date	12-18-14

Rev	Date	Description	By

60% SUBMITTAL
NOT FOR CONSTRUCTION

PREPARED BY:
PARSONS
222 SOUTH MILL AVENUE
SUITE #220
TEMPE, ARIZONA 85281
(602)852-9195
(602)952-9303 fax

PIMA MARICOPA IRRIGATION PROJECT
P.O. BOX G
1392 A SOUTH ROUTE A STREET
SACATON, AZ 85147
(520)562-6700
(520)562-6791 FAX

REACHES WS-1E AND WS-1F

TRAFFIC CONTROL

DRAWING NAME
TC-1.5

TO BE DEVELOPED

FOR 90% SUBMITTAL

Job No.	647979
Designed	MFM
Drawn	JD
Checked	JZ
Reviewed	JZ
Approved	JZ
Reg. No.	25118
Plot Date	12-18-14

Rev	Date	Description	By

60% SUBMITTAL
NOT FOR CONSTRUCTION

PREPARED BY:
PARSONS
222 SOUTH MILL AVENUE
SUITE #220
TEMPE, ARIZONA 85281
(602)852-9195
(602)952-9303 fax

PIMA MARICOPA IRRIGATION PROJECT
P.O. BOX G
1152 A SOUTH ROUTE A STREET
SACATON, AZ 85147
(520)562-6700
(520)562-6791 FAX

REACHES WS-1E AND WS-1F

TRAFFIC CONTROL

DRAWING NAME
TC-1.6

BORING NO. 1

DATE DRILLED: 7-22-14
LOCATION: N 33.3194°, W 112.1776°
ELEVATION: Not Determined
EQUIPMENT TYPE: CME-75
DRILLING TYPE: 7" H.S.A
FIELD ENGINEER: A. Collinwood

MOISTURE CONTENT (%DRY WT)	DRY DENSITY (LBS/CU FT)	SAMPLE TYPE	BLOWS/FT.	DEPTH (FEET)	USCS	SOIL DESCRIPTION
		G			CL-ML	Sandy SILT and CLAY; trace gravel, brown, very stiff, damp
9.9	91	R	27			
6.9	97	R	58	5		hard, light to moderate cementation
10.4	91	R	50-6"	10		
		N	45	15		
		N	14	20	SM	Silty SAND; grayish brown, medium dense, damp
						Boring Terminated at 21.5 ft Depth

N- STANDARD SAMPLER
R- RING SAMPLER
M- OPEN SAMPLER (NO RINGS)
G- GRAB SAMPLE
B- BUCKET SAMPLE

NOTES: Groundwater Not Encountered

THIS SUMMARY APPLIES ONLY AT THIS LOCATION AND AT THE TIME OF LOGGING. CONDITIONS MAY DIFFER AT OTHER LOCATIONS AND MAY CHANGE AT THIS LOCATION WITH TIME. DATA PRESENTED IS A SIMPLIFICATION.

Geotechnical Environmental Inspections Materials — Western Technologies Inc. The Quality People Since 1955

PROJECT: GRIC P-MIP REACH WS-IE AND WS-IF
PROJECT NO.: 2124IA083

BORING LOG

PLATE A-4

BORING NO. 2

DATE DRILLED: 7-22-14
LOCATION: N 33.3194°, W 112.1730°
ELEVATION: Not Determined
EQUIPMENT TYPE: CME-75
DRILLING TYPE: 7" H.S.A
FIELD ENGINEER: A. Collinwood

MOISTURE CONTENT (%DRY WT)	DRY DENSITY (LBS/CU FT)	SAMPLE TYPE	BLOWS/FT.	DEPTH (FEET)	USCS	SOIL DESCRIPTION
		G			CL-ML	Sandy SILT and CLAY; some gravel, tan, stiff, slightly damp
4.2	101	R	14			
10.0	90	R	33	5		very stiff, damp
9.5	100	R	68	10		hard, light cementation
		N	30	15		very stiff
				20		
						Boring Terminated at 16.5 ft Depth

N- STANDARD SAMPLER
R- RING SAMPLER
M- OPEN SAMPLER (NO RINGS)
G- GRAB SAMPLE
B- BUCKET SAMPLE

NOTES: Groundwater Not Encountered

THIS SUMMARY APPLIES ONLY AT THIS LOCATION AND AT THE TIME OF LOGGING. CONDITIONS MAY DIFFER AT OTHER LOCATIONS AND MAY CHANGE AT THIS LOCATION WITH TIME. DATA PRESENTED IS A SIMPLIFICATION.

Geotechnical Environmental Inspections Materials — Western Technologies Inc. The Quality People Since 1955

PROJECT: GRIC P-MIP REACH WS-IE AND WS-IF
PROJECT NO.: 2124IA083

BORING LOG

PLATE A-5

BORING NO. 3

DATE DRILLED: 7-22-14
LOCATION: N 33.3257°, W 112.1701°
ELEVATION: Not Determined
EQUIPMENT TYPE: CME-75
DRILLING TYPE: 7" H.S.A
FIELD ENGINEER: A. Collinwood

MOISTURE CONTENT (%DRY WT)	DRY DENSITY (LBS/CU FT)	SAMPLE TYPE	BLOWS/FT.	DEPTH (FEET)	USCS	SOIL DESCRIPTION
		G			SC-SM	Clayey Silty SAND; with gravel, tan, dense, damp
10.1	96	R	45			
		R	50-6"	5		very dense
9.9	91	R	50	10		light cementation
		N	27	15		medium dense
				20		
						Boring Terminated at 16.5 ft Depth

N- STANDARD SAMPLER
R- RING SAMPLER
M- OPEN SAMPLER (NO RINGS)
G- GRAB SAMPLE
B- BUCKET SAMPLE

NOTES: Groundwater Not Encountered

THIS SUMMARY APPLIES ONLY AT THIS LOCATION AND AT THE TIME OF LOGGING. CONDITIONS MAY DIFFER AT OTHER LOCATIONS AND MAY CHANGE AT THIS LOCATION WITH TIME. DATA PRESENTED IS A SIMPLIFICATION.

Geotechnical Environmental Inspections Materials — Western Technologies Inc. The Quality People Since 1955

PROJECT: GRIC P-MIP REACH WS-IE AND WS-IF
PROJECT NO.: 2124IA083

BORING LOG

PLATE A-6

BORING NO. 4

DATE DRILLED: 7-22-14
LOCATION: N 33.3194°, W 112.1750°
ELEVATION: Not Determined
EQUIPMENT TYPE: CME-75
DRILLING TYPE: 7" H.S.A
FIELD ENGINEER: A. Collinwood

MOISTURE CONTENT (%DRY WT)	DRY DENSITY (LBS/CU FT)	SAMPLE TYPE	BLOWS/FT.	DEPTH (FEET)	USCS	SOIL DESCRIPTION
		G			CL-ML	Sandy SILT and CLAY; trace gravel, tan, medium dense, slightly damp
4.5	100	R	12			
9.9	95	R	32	5		dense, damp
9.4	107	R	87-11"	10		very dense
		N	29	15		medium dense to dense
				20		
						Boring Terminated at 16.5 ft Depth

N- STANDARD SAMPLER
R- RING SAMPLER
M- OPEN SAMPLER (NO RINGS)
G- GRAB SAMPLE
B- BUCKET SAMPLE

NOTES: Groundwater Not Encountered

THIS SUMMARY APPLIES ONLY AT THIS LOCATION AND AT THE TIME OF LOGGING. CONDITIONS MAY DIFFER AT OTHER LOCATIONS AND MAY CHANGE AT THIS LOCATION WITH TIME. DATA PRESENTED IS A SIMPLIFICATION.

Geotechnical Environmental Inspections Materials — Western Technologies Inc. The Quality People Since 1955

PROJECT: GRIC P-MIP REACH WS-IE AND WS-IF
PROJECT NO.: 2124IA083

BORING LOG

PLATE A-7

BORING NO. 5

DATE DRILLED: 7-22-14
LOCATION: N 33.3194°, W 112.1862°
ELEVATION: Not Determined
EQUIPMENT TYPE: CME-75
DRILLING TYPE: 7" H.S.A
FIELD ENGINEER: A. Collinwood

MOISTURE CONTENT (%DRY WT)	DRY DENSITY (LBS/CU FT)	SAMPLE TYPE	BLOWS/FT.	DEPTH (FEET)	USCS	SOIL DESCRIPTION
		G			CL	Sandy CLAY; light brown, very stiff, damp
9.6	95	R	29			
7.0	97	R	28	5		
10.4	93	R	73	10		hard, light cementation
		N	25	15		very stiff
				20		
						Boring Terminated at 16.5 ft Depth

N- STANDARD SAMPLER
R- RING SAMPLER
M- OPEN SAMPLER (NO RINGS)
G- GRAB SAMPLE
B- BUCKET SAMPLE

NOTES: Groundwater Not Encountered

THIS SUMMARY APPLIES ONLY AT THIS LOCATION AND AT THE TIME OF LOGGING. CONDITIONS MAY DIFFER AT OTHER LOCATIONS AND MAY CHANGE AT THIS LOCATION WITH TIME. DATA PRESENTED IS A SIMPLIFICATION.

Geotechnical Environmental Inspections Materials — Western Technologies Inc. The Quality People Since 1955

PROJECT: GRIC P-MIP REACH WS-IE AND WS-IF
PROJECT NO.: 2124IA083

BORING LOG

PLATE A-8

BORING NO. 6

DATE DRILLED: 7-22-14
LOCATION: N 33.3229°, W 112.1864°
ELEVATION: Not Determined
EQUIPMENT TYPE: CME-75
DRILLING TYPE: 7" H.S.A
FIELD ENGINEER: A. Collinwood

MOISTURE CONTENT (%DRY WT)	DRY DENSITY (LBS/CU FT)	SAMPLE TYPE	BLOWS/FT.	DEPTH (FEET)	USCS	SOIL DESCRIPTION
		G			CL	Sandy CLAY; light brown, very stiff, moist
11.1	93	R	33			
7.4	100	R	37	5		damp, light cementation
7.6	104	R	75-11"	10		hard
		N	48	15		
				20		
						Boring Terminated at 16.5 ft Depth

N- STANDARD SAMPLER
R- RING SAMPLER
M- OPEN SAMPLER (NO RINGS)
G- GRAB SAMPLE
B- BUCKET SAMPLE

NOTES: Groundwater Not Encountered

THIS SUMMARY APPLIES ONLY AT THIS LOCATION AND AT THE TIME OF LOGGING. CONDITIONS MAY DIFFER AT OTHER LOCATIONS AND MAY CHANGE AT THIS LOCATION WITH TIME. DATA PRESENTED IS A SIMPLIFICATION.

Geotechnical Environmental Inspections Materials — Western Technologies Inc. The Quality People Since 1955

PROJECT: GRIC P-MIP REACH WS-IE AND WS-IF
PROJECT NO.: 2124IA083

BORING LOG

PLATE A-9

BORING NO. 7

DATE DRILLED: 7-22-14
LOCATION: N 33.3245°, W 112.1865°
ELEVATION: Not Determined
EQUIPMENT TYPE: CME-75
DRILLING TYPE: 7" H.S.A
FIELD ENGINEER: A. Collinwood

MOISTURE CONTENT (%DRY WT)	DRY DENSITY (LBS/CU FT)	SAMPLE TYPE	BLOWS/FT.	DEPTH (FEET)	USCS	SOIL DESCRIPTION
		G			CL	Sandy CLAY; trace gravel, light brown, very stiff, moist
11.5	94	R	38			
8.6	92	R	35	5		
11.7	86	R	50	10		hard
		N	75	15		
				20		
						Boring Terminated at 16.5 ft Depth

N- STANDARD SAMPLER
R- RING SAMPLER
M- OPEN SAMPLER (NO RINGS)
G- GRAB SAMPLE
B- BUCKET SAMPLE

NOTES: Groundwater Not Encountered

THIS SUMMARY APPLIES ONLY AT THIS LOCATION AND AT THE TIME OF LOGGING. CONDITIONS MAY DIFFER AT OTHER LOCATIONS AND MAY CHANGE AT THIS LOCATION WITH TIME. DATA PRESENTED IS A SIMPLIFICATION.

Geotechnical Environmental Inspections Materials — Western Technologies Inc. The Quality People Since 1955

PROJECT: GRIC P-MIP REACH WS-IE AND WS-IF
PROJECT NO.: 2124IA083

BORING LOG

PLATE A-10

BORING NO. 8

DATE DRILLED: 7-23-14
LOCATION: N 33.3278°, W 112.1863°
ELEVATION: Not Determined
EQUIPMENT TYPE: CME-75
DRILLING TYPE: 7" H.S.A
FIELD ENGINEER: A. Collinwood

MOISTURE CONTENT (%DRY WT)	DRY DENSITY (LBS/CU FT)	SAMPLE TYPE	BLOWS/FT.	DEPTH (FEET)	USCS	SOIL DESCRIPTION
		G			SC-CL	Clayey SAND; brown, dense, slightly damp
6.0	98	R	53			light to moderate cementation
11.4	93	R	50	5		damp
7.7	84	R	10	10		loose
		N	23	15		medium dense
				20		
						Boring Terminated at 16.5 ft Depth

N- STANDARD SAMPLER
R- RING SAMPLER
M- OPEN SAMPLER (NO RINGS)
G- GRAB SAMPLE
B- BUCKET SAMPLE

NOTES: Groundwater Not Encountered

THIS SUMMARY APPLIES ONLY AT THIS LOCATION AND AT THE TIME OF LOGGING. CONDITIONS MAY DIFFER AT OTHER LOCATIONS AND MAY CHANGE AT THIS LOCATION WITH TIME. DATA PRESENTED IS A SIMPLIFICATION.

Geotechnical Environmental Inspections Materials — Western Technologies Inc. The Quality People Since 1955

PROJECT: GRIC P-MIP REACH WS-IE AND WS-IF
PROJECT NO.: 2124IA083

BORING LOG

PLATE A-11

By	Description	Date	Rev

Job No. 647979
Designed
Drawn
Checked
Reviewed
Approved
Reg. No. 25118
Plot Date 12-18-14

60% SUBMITTAL NOT FOR CONSTRUCTION

PREPARED BY:

WESTERN TECHNOLOGIES INC.
1173 E. Rio Salado Parkway
Phoenix, AZ 85040-2964
(602) 437-3737 FAX
(602) 437-3097

GILA RIVER INDIAN COMMUNITY ARIZONA 1859

PIMA MARICOPA IRRIGATION PROJECT

P.O. BOX C
192-A SOUTH ROUTE A STREET
SACATON, AZ 85147
(520)562-6700
(520)562-6791 FAX

REACHES WS-1E AND WS-1F

SOIL BORING AND LOG

DRAWING NAME
SB-1.0