RECLAMATION

Managing Water in the West

Risk Management and Dam Safety

Jeanne Major, P.E.
Civil Engineer
Geotechnical Engineering Group 2

U.S. Department of the Interior
Bureau of Reclamation

Reclamation Played a Pivotal Role in Developing Major River Basins in the Western United States

RECLAMATION

Reclamation is . . .

- The nation's largest wholesale water supplier
- Second largest producer of hydroelectric power in the 17 Western States
- Responsible for more than 600 dams and reservoirs, including Hoover Dam on the Colorado River and Grand Coulee Dam on the Columbia River

RECLAMATION

- 1874 – Williamsburg Dam, MA failed
- 139 killed
- Internal erosion / seepage carried away fill, embankment sliding, then collapse of masonry core wall
- Massachusetts enacted legislation regulating dam construction

RECLAMATION

- St. Francis Dam, CA
  Failed in 1928
- 450 killed
- California and neighboring states established dam safety laws in 1929

RECLAMATION

Dam Safety

1976 Failure of Teton Dam

1978 Reclamation Safety of Dams Act

1979 Federal Guidelines for Dam Safety

1997 and 2003 Guidelines for Achieving Public Protection in Dam Safety Decision Making

RECLAMATION

Reclamation's Dam Safety Program

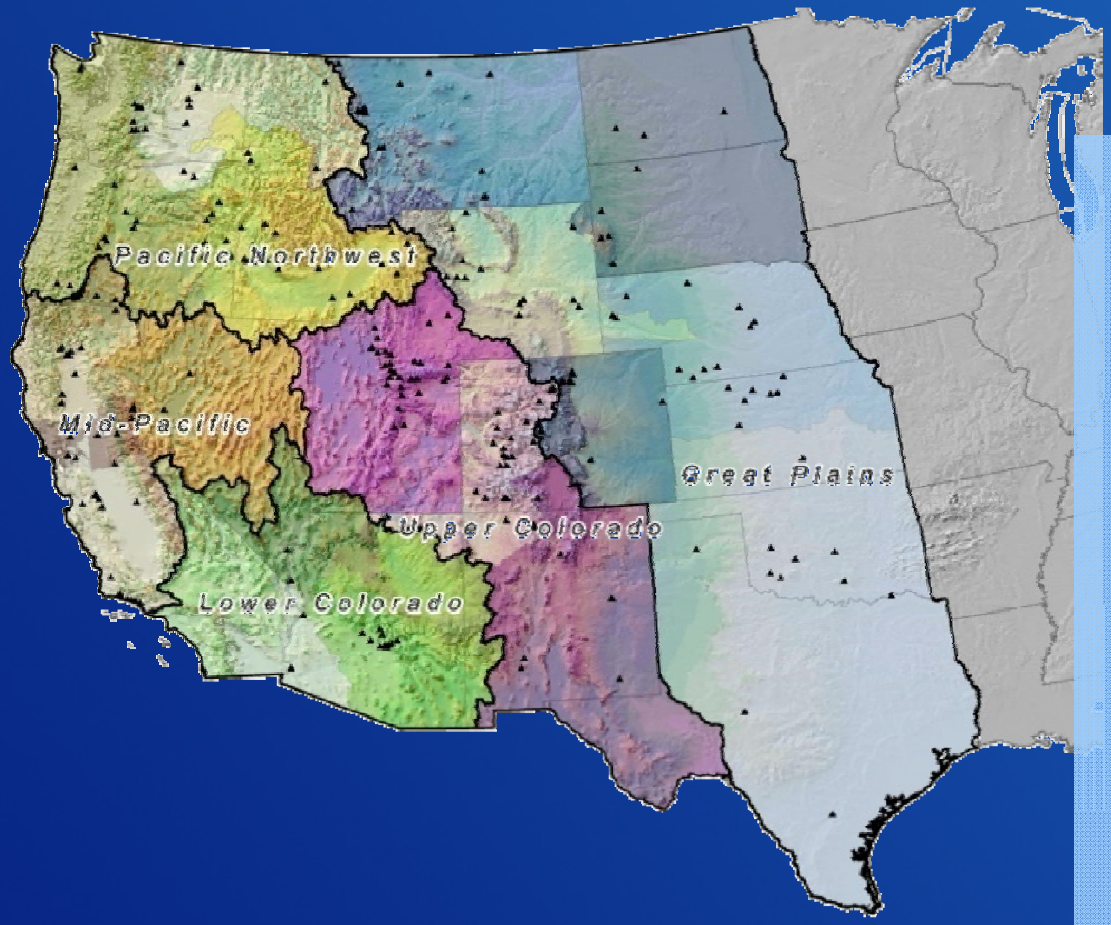

Reclamation manages 477 dams and dikes

371 High or Significant Hazard dams and dikes would cause loss of life or significant damages if they would fail **and form the core of the Dam Safety Program**

RECLAMATION

Reclamation's Portfolio of Dams

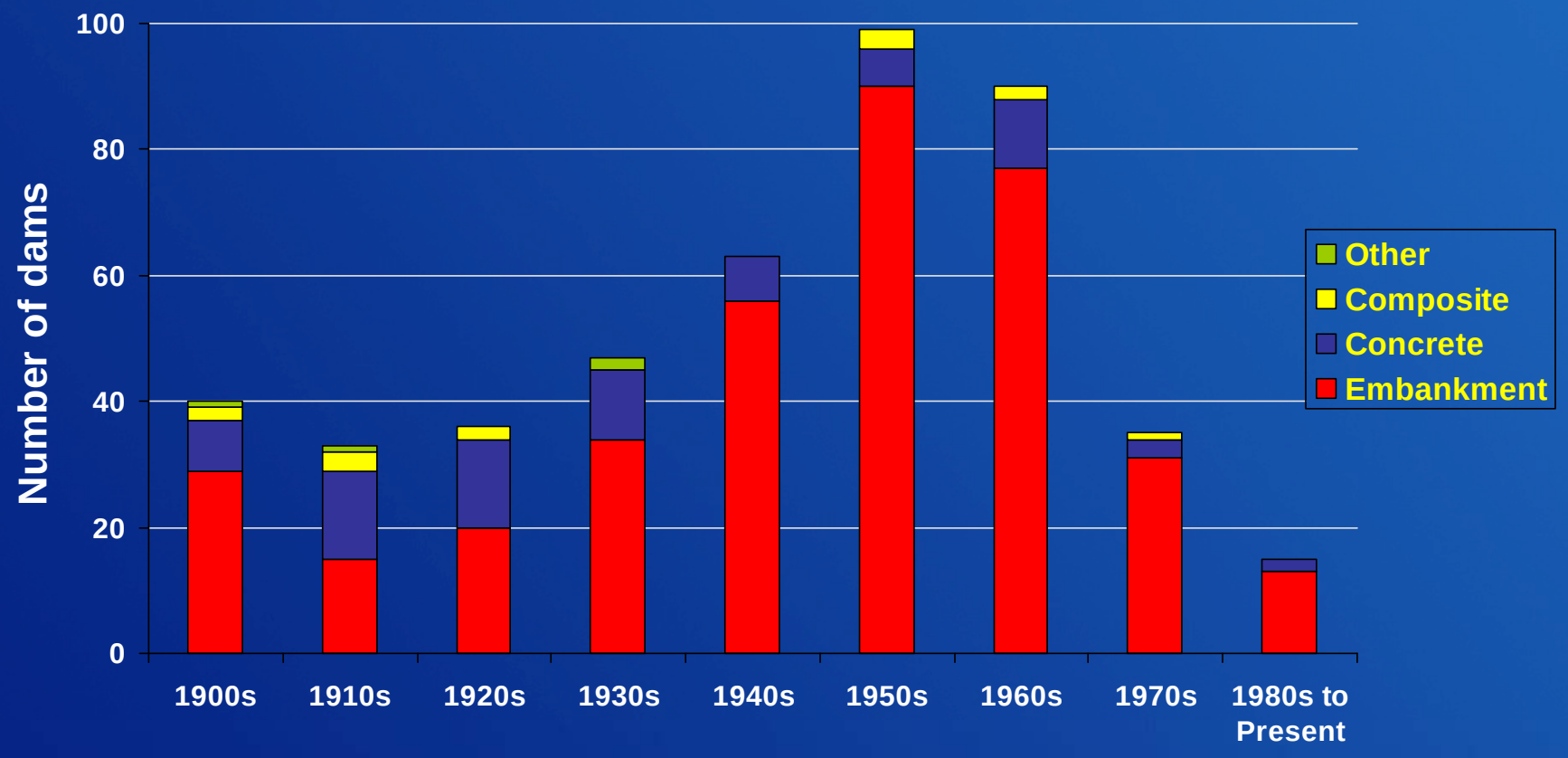

RECLAMATION

Dam Safety and Reclamation

- Reclamation has 371 **high** and **significant** hazard dams
- Over 50 % of these dams are more than 50 years old (oldest 100 years old)
- Potential loading conditions (floods and earthquakes) have increased for many of the dams
- Populations growing downstream of dams

RECLAMATION

The age of our dams means many have out-dated design and construction practices

RECLAMATION

Reclamation's Dam Safety Program

Dam Safety Mission

To ensure that Reclamation facilities do not present unreasonable risks to the public, public safety, property, and/or the environment.

Risk Based Decision Making
Risk Management Process

- Use of quantitative risk assessment to inform decision making and to prioritize activities since the 1990's

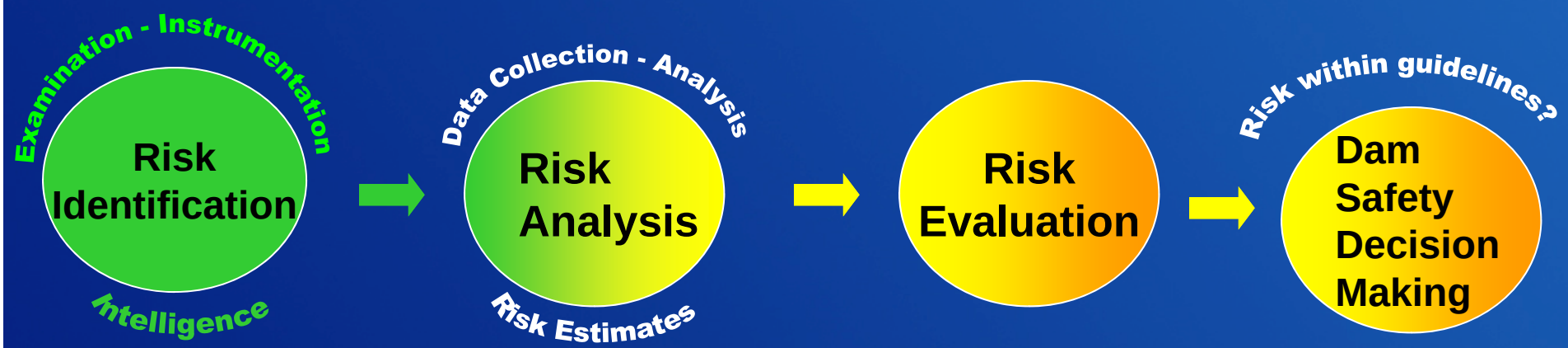

RECLAMATION

Reclamation's Dam Safety Process

- Ongoing Activities/Risk Identification
  - Examinations
  - Monitoring
  - Comprehensive Facility Reviews
- Issue Evaluations
- Corrective Action Study
- Modifications or other actions

RECLAMATION

Ongoing Activities

- Operations
- Maintenance
- Site Visits
  - Routine monitoring
  - Annual exams
  - 3 year interval facility reviews

RECLAMATION

Ongoing Activities

- Dam instrumentation monitoring and data collection
- Evaluation of instrumentation data
- Responses to incidents and poor performance

RECLAMATION

Ongoing Activities - Comprehensive Facility Reviews

- Performed once every 6 years
- Evaluation of analysis, design and construction
- Identification of potential failure modes
- Review of the performance of the dam
- Development of performance parameters
  - *Monitoring program to look for possible development of a failure mode.*

RECLAMATION

Comprehensive Facility Reviews

- Review of static, hydrologic and seismic loading conditions at the dam
- *Risk analysis*
- Field examination team
- Underwater & mechanical examinations
- Recommendations

RECLAMATION

What Is Risk Analysis?

- Risk can be evaluated by answering…
  - What undesired event could occur?
  - How likely is it?
  - What would happen if it did?

RECLAMATION

$$\text{Risk} = (P_{event})(P_{response})(\text{consequences})$$

LOAD
Floods
Earthquake
Normal

RESPONSE
Failure
Non-failure

CONSEQUENCES
Life Loss
Economic
Environment
Cultural

RECLAMATION

Risk Analysis used in Dam Safety for…

- Gaining a better understanding of what can cause the dam to fail
- Quantifying the engineering judgments (need to build the case to support the estimates)
- Identifying need for additional studies
- Setting priorities. Should corrective action take place immediately, next year, in 6 years, etc?
  - Identifying most cost effective means to reduce risk

RECLAMATION

The typical steps of a dam safety risk analysis…

- Identify failure modes
- Determine frequency of loads of concern
- Estimate likelihood of failure
- Estimate potential life loss
- Compute risk and identify uncertainties
- Examine the conclusions
- Make recommendations

RECLAMATION

Identify Failure Modes:

- **Familiar w/ Reclamation and dam building/operation history:**

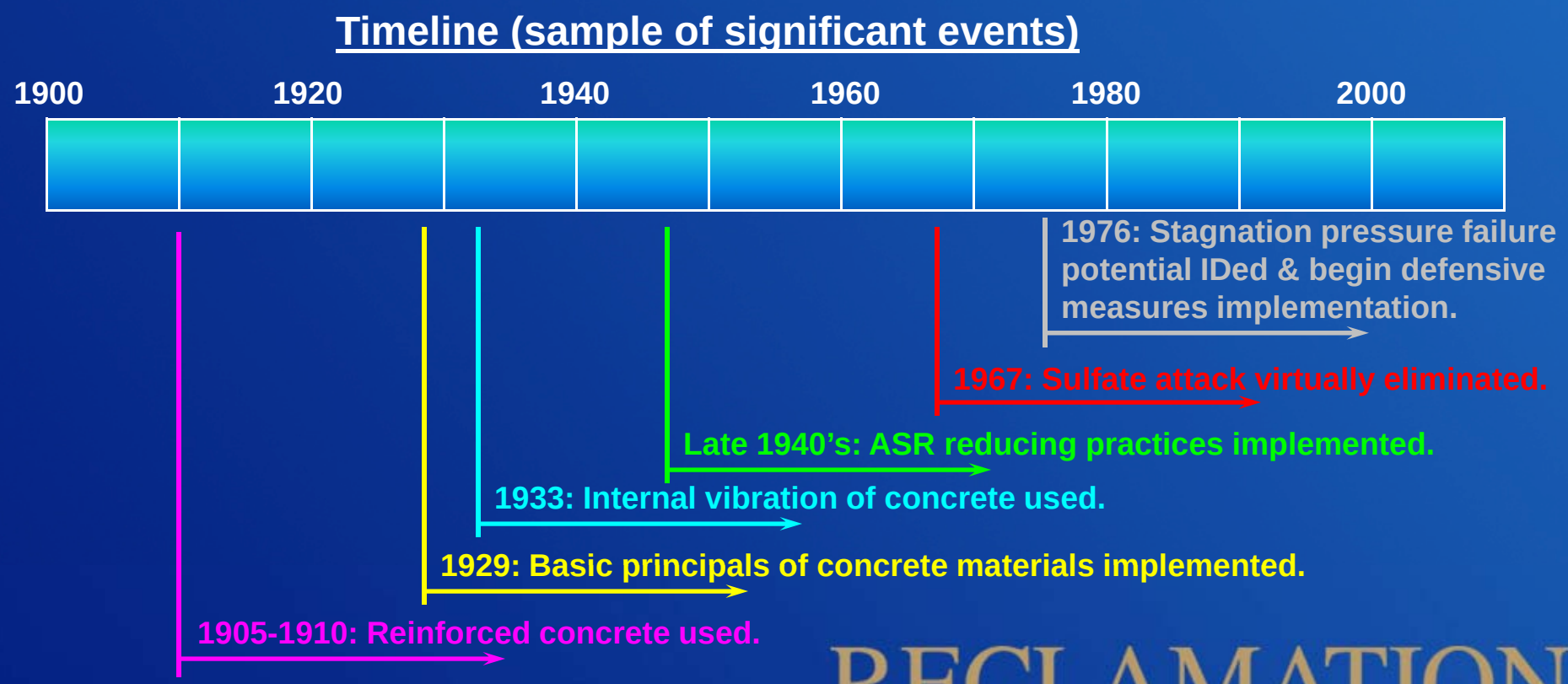

RECLAMATION

Identify Failure Modes

Normal loads

Internal Erosion

RECLAMATION

Normal Loads (continued)

Foundation Failure

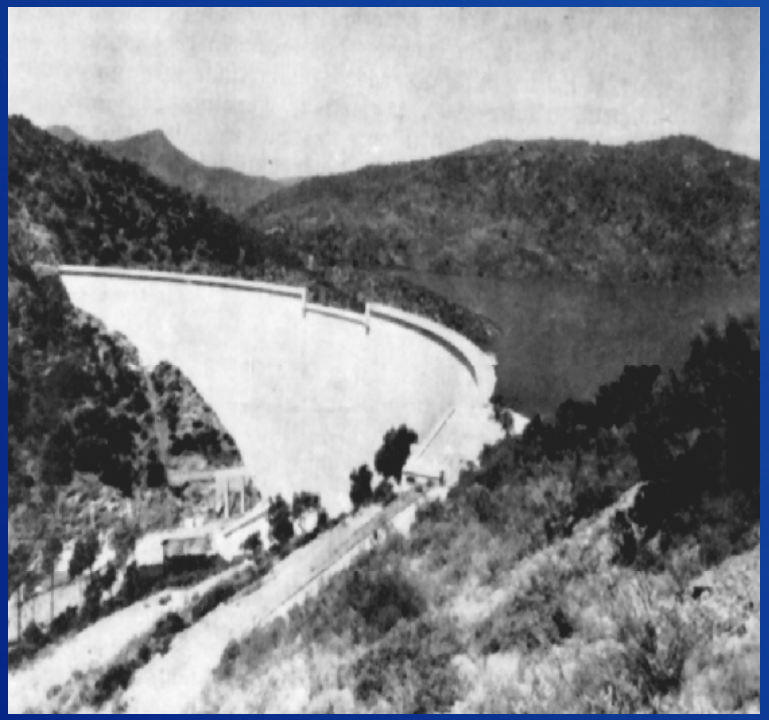

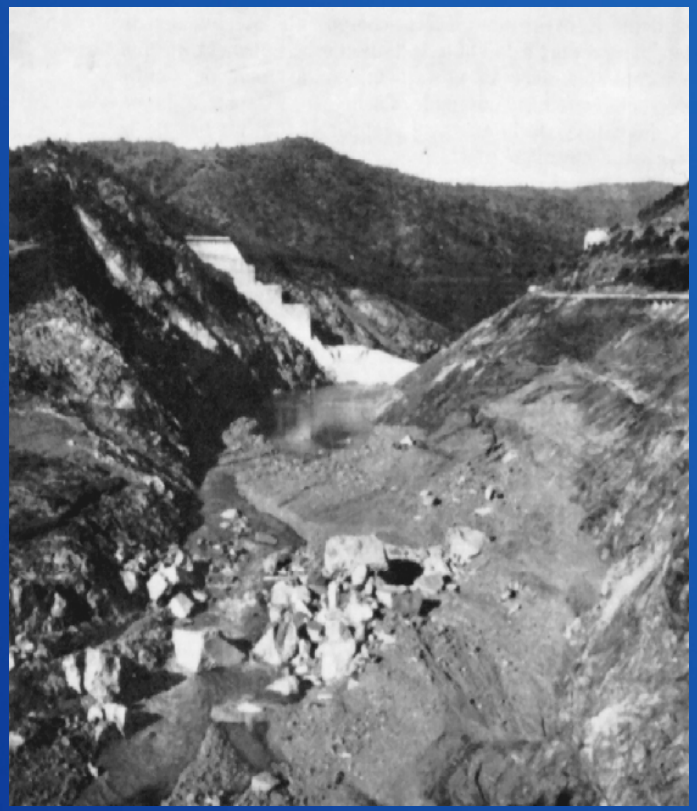

RECLAMATION

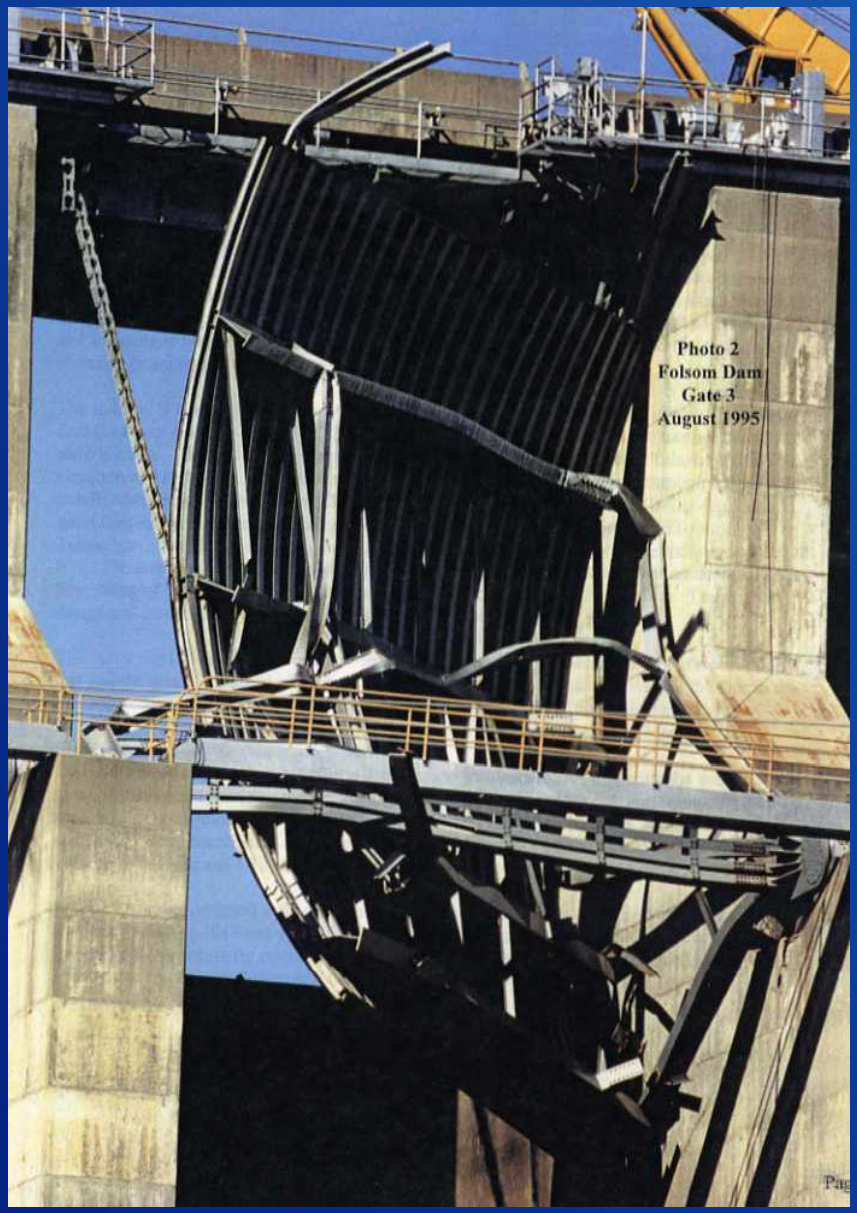

Normal Loads (cont.)

Spillway Gate Failure

RECLAMATION

Flood Loads

Dam
Overtopping

RECLAMATION

Ricobayo Dam Spillway Erosion

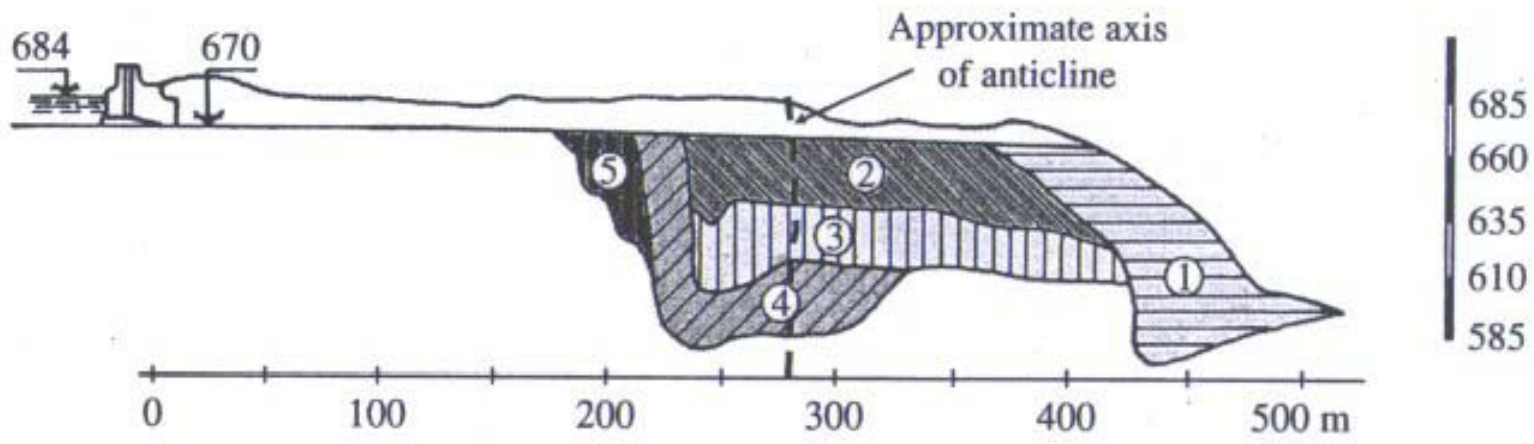

1 - January 1934, 2 - March 1934, 3 - March 1935, 4 - March 1936, 5 - January 1939

Figure 10.7 Scour history: flood events and progressions of scour as a function of time.

RECLAMATION

Chute Wall Overtopping

RECLAMATION

RECLAMATION

Earthquake Loads – Fault Displacement

RECLAMATION

Upstream Pier Failure

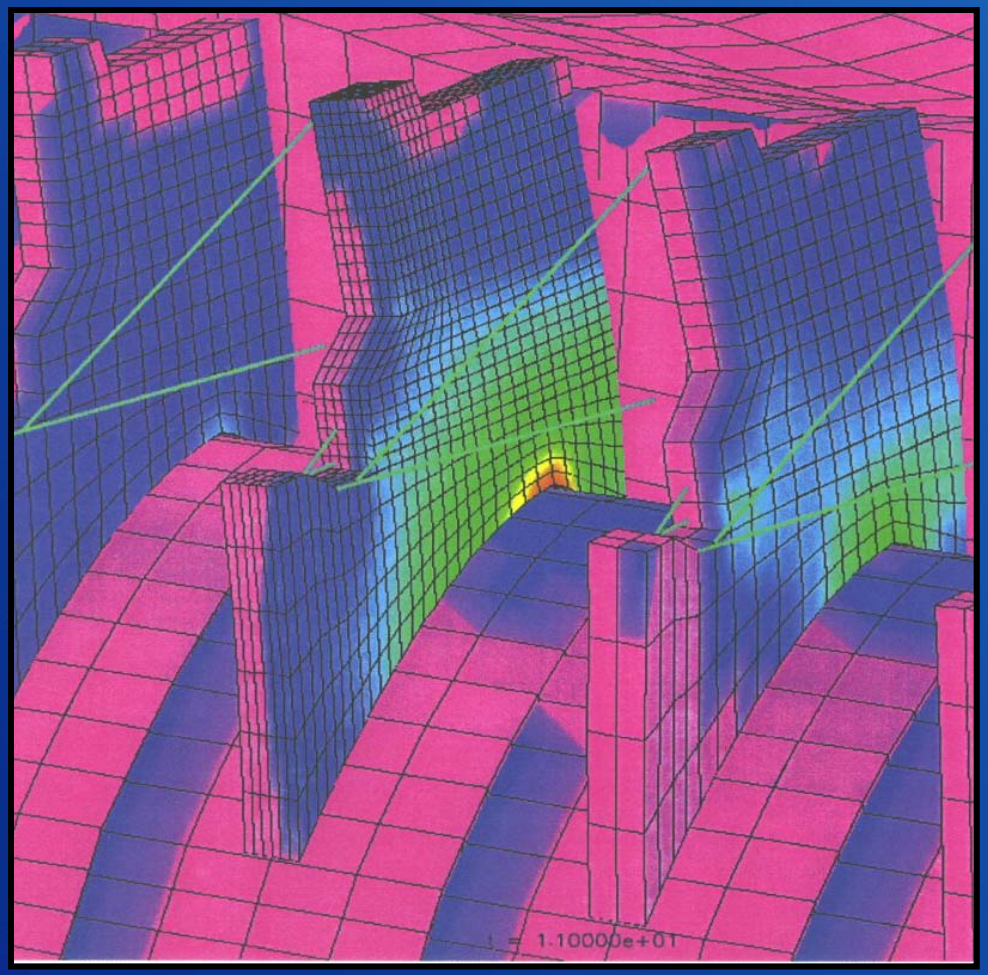

RECLAMATION

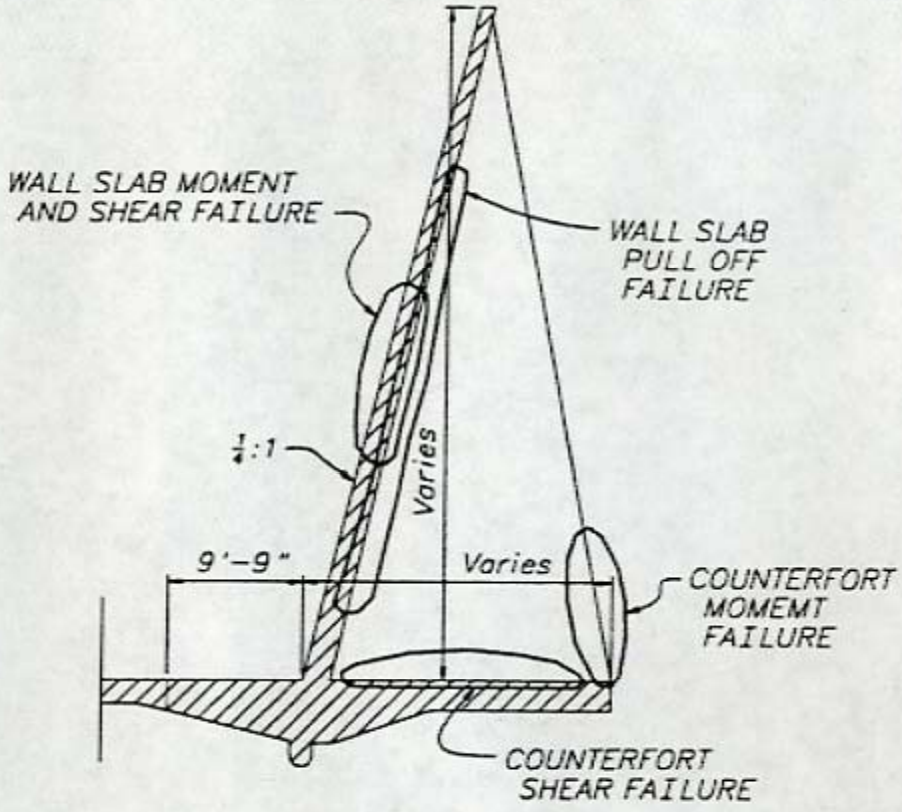

FAILURE LOCATIONS FOR CHUTE WALL

Counterforted Wall Failure

RECLAMATION

Foundation Liquefaction

RECLAMATION

Spillway Radial Gate Failure

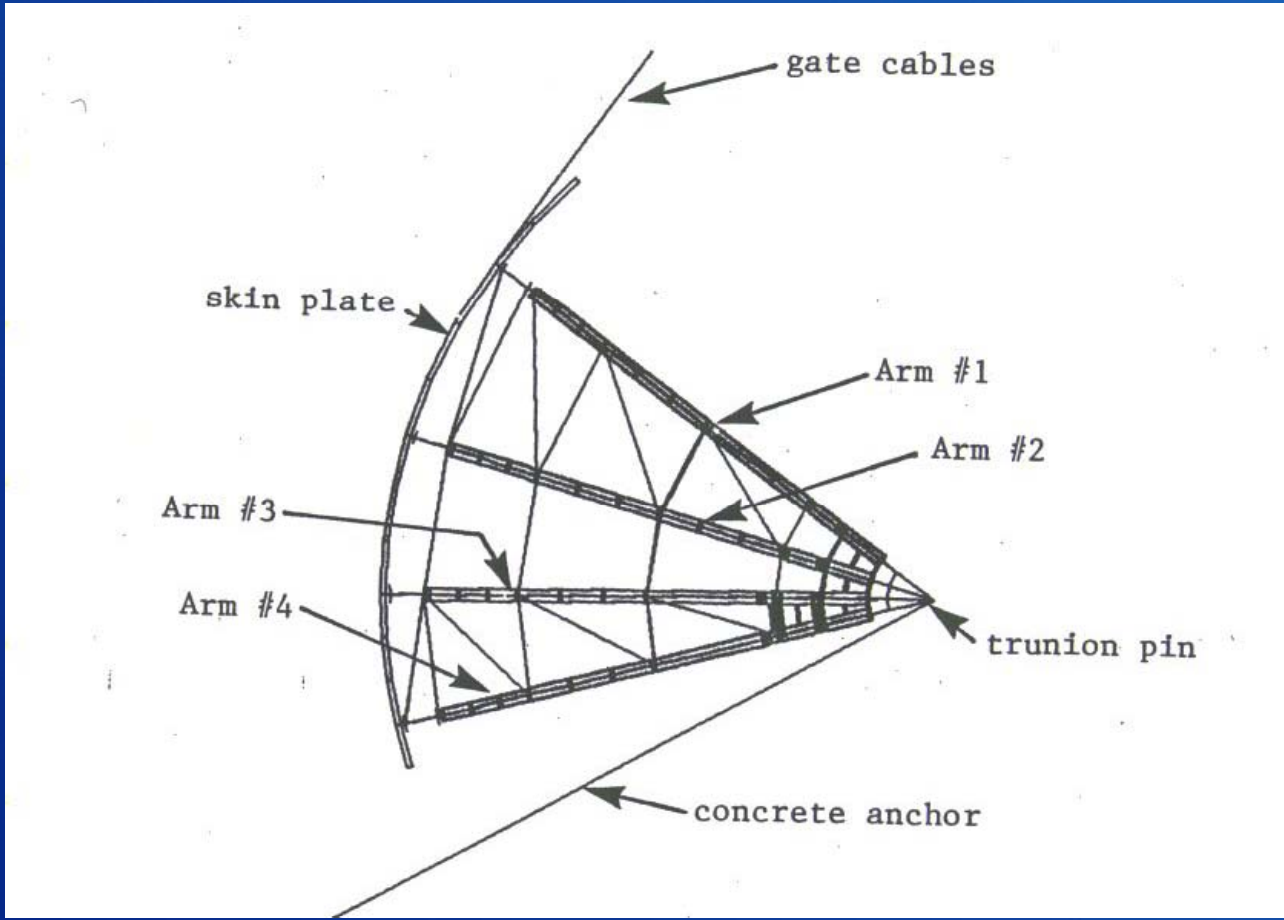

RECLAMATION

Estimate Load Probability

- Look at full range of loading conditions, not just extreme loads

- Provided by specialists
  - Flood frequency analysis
  - Probabilistic seismic hazard analysis

RECLAMATION

Dam Overtopping

- Starting reservoir water surface elevation
- Flood load ranges
- Dam Overtops
- Headcutting leads to breach and uncontrolled release of reservoir

RECLAMATION

Embankment Dam Overtopping Event Tree

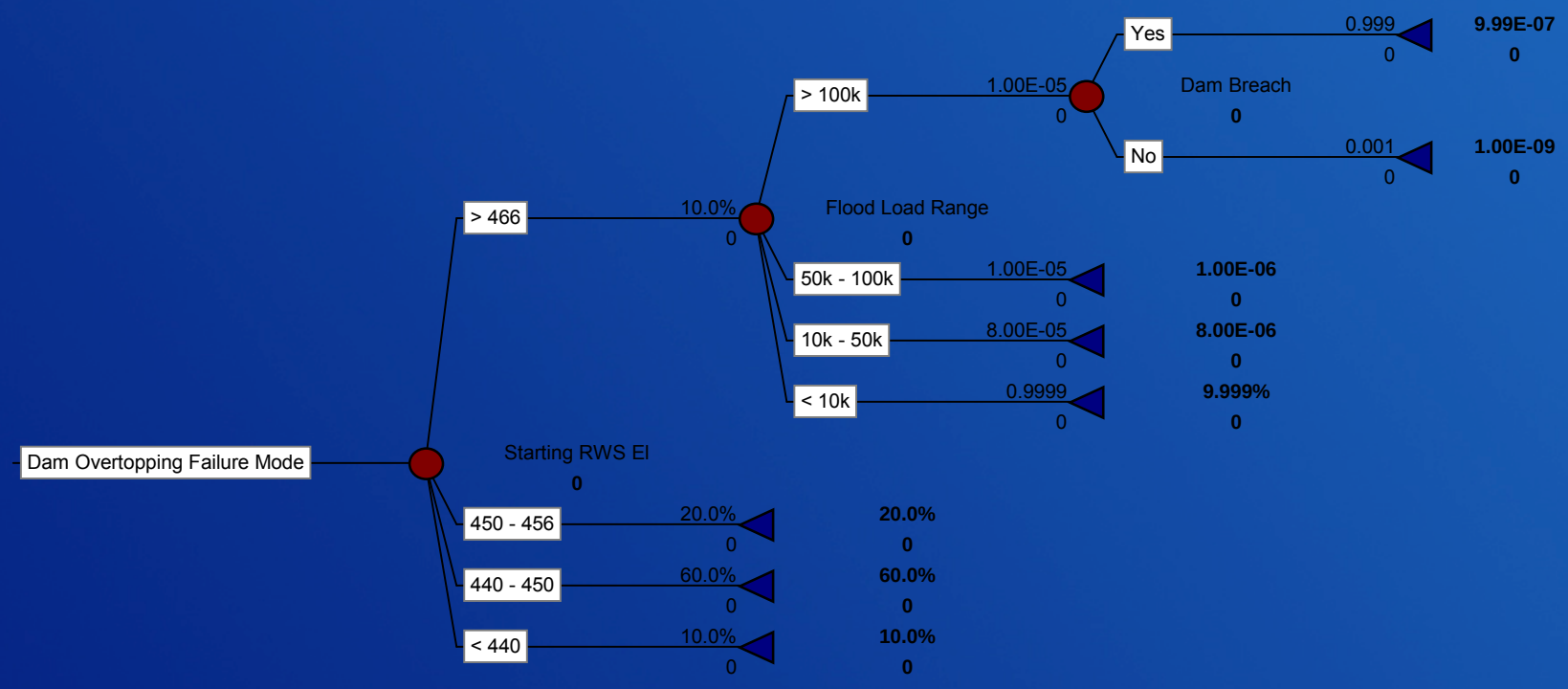

RECLAMATION

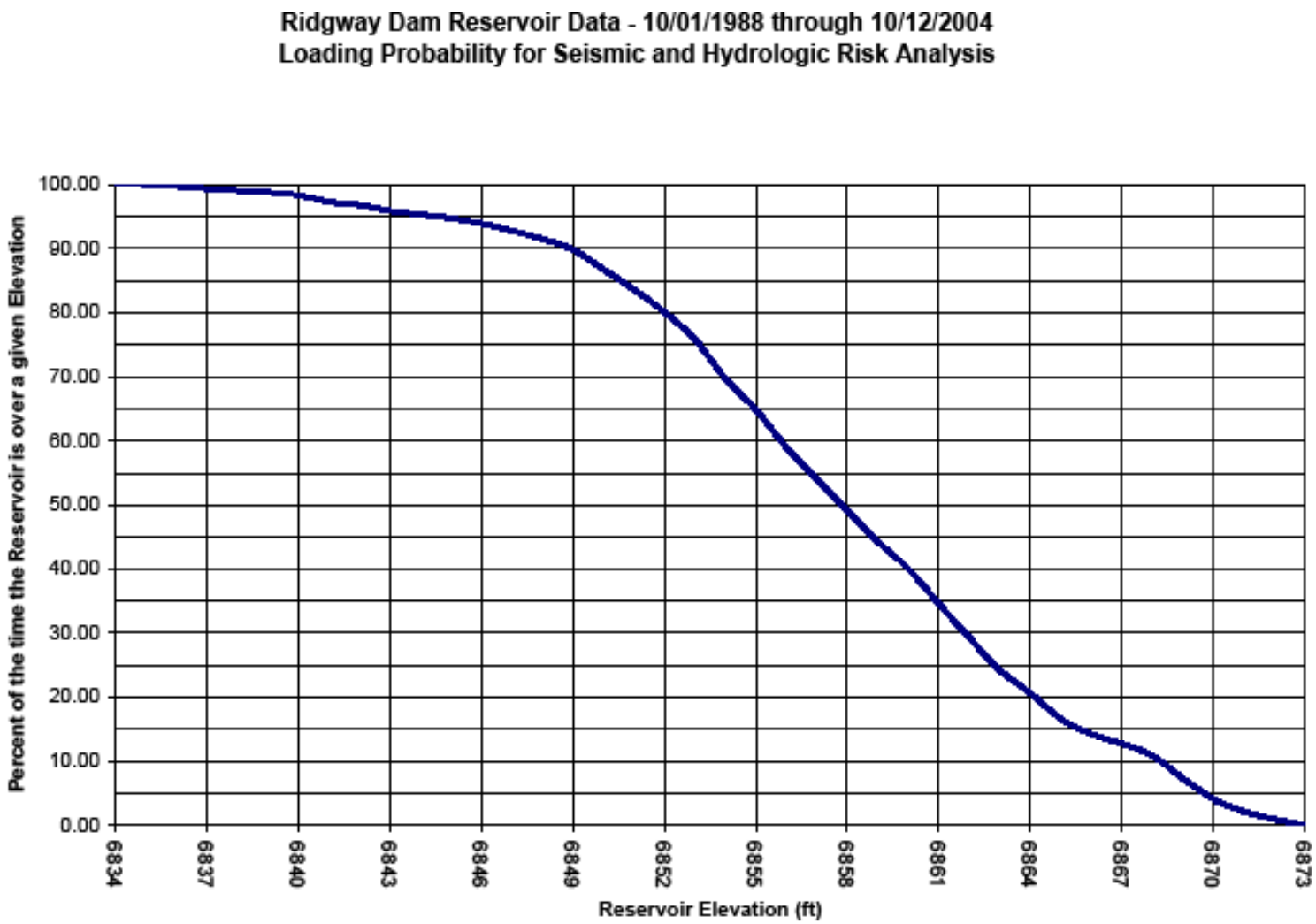
Ridgway Dam Reservoir Data - 10/01/1988 through 10/12/2004
Loading Probability for Seismic and Hydrologic Risk Analysis
Percent of the time the Reservoir is over a given Elevation
100.00
90.00
80.00
70.00
60.00
50.00
40.00
30.00
20.00
10.00
0.00
6834
6837
6840
6843
6846
6849
6852
6855
6858
6861
6864
6867
6870
6873
Reservoir Elevation (ft)

State-of-the-Art Flood Frequency Curves

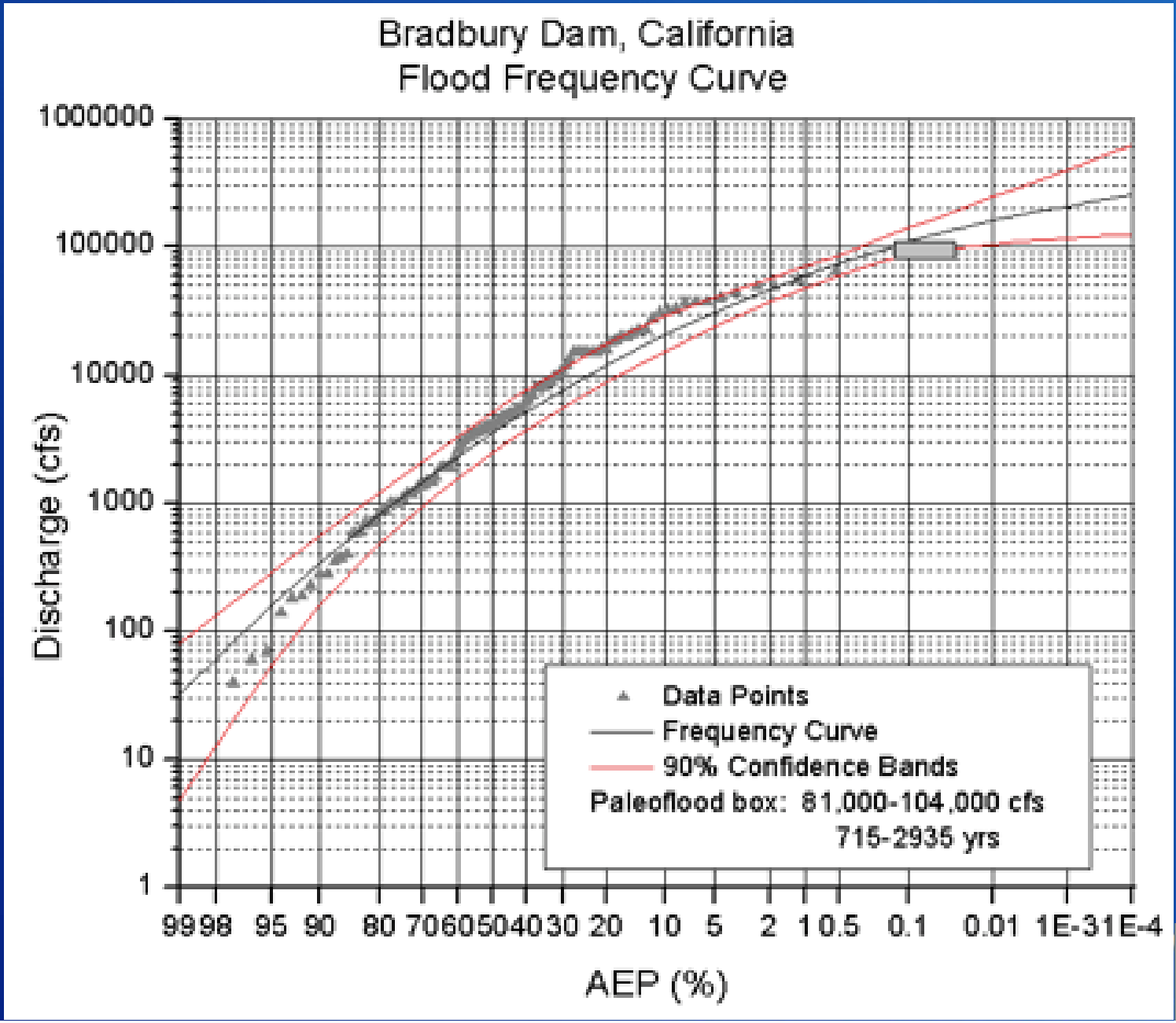

Event Tree

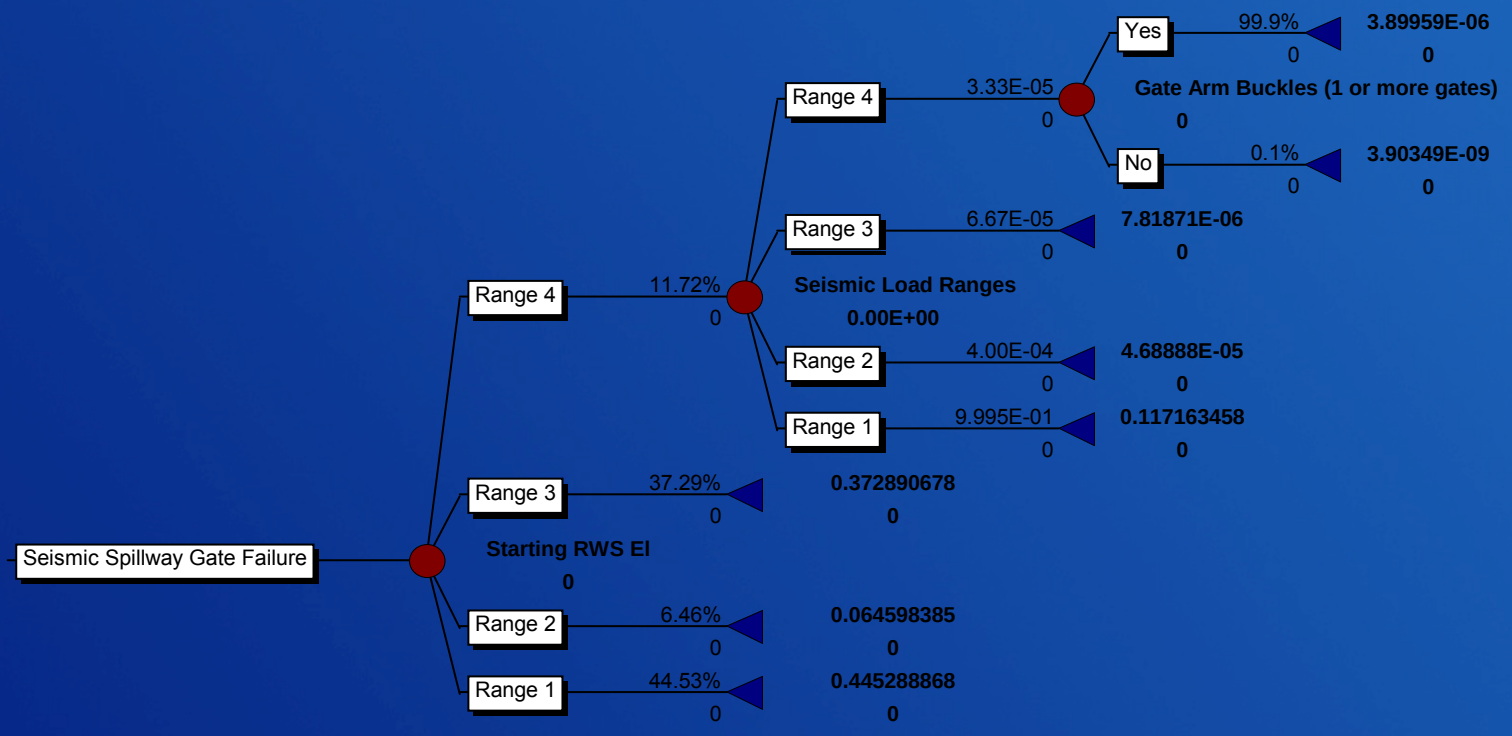

Figure 15-2 - Example Event Tree

RECLAMATION

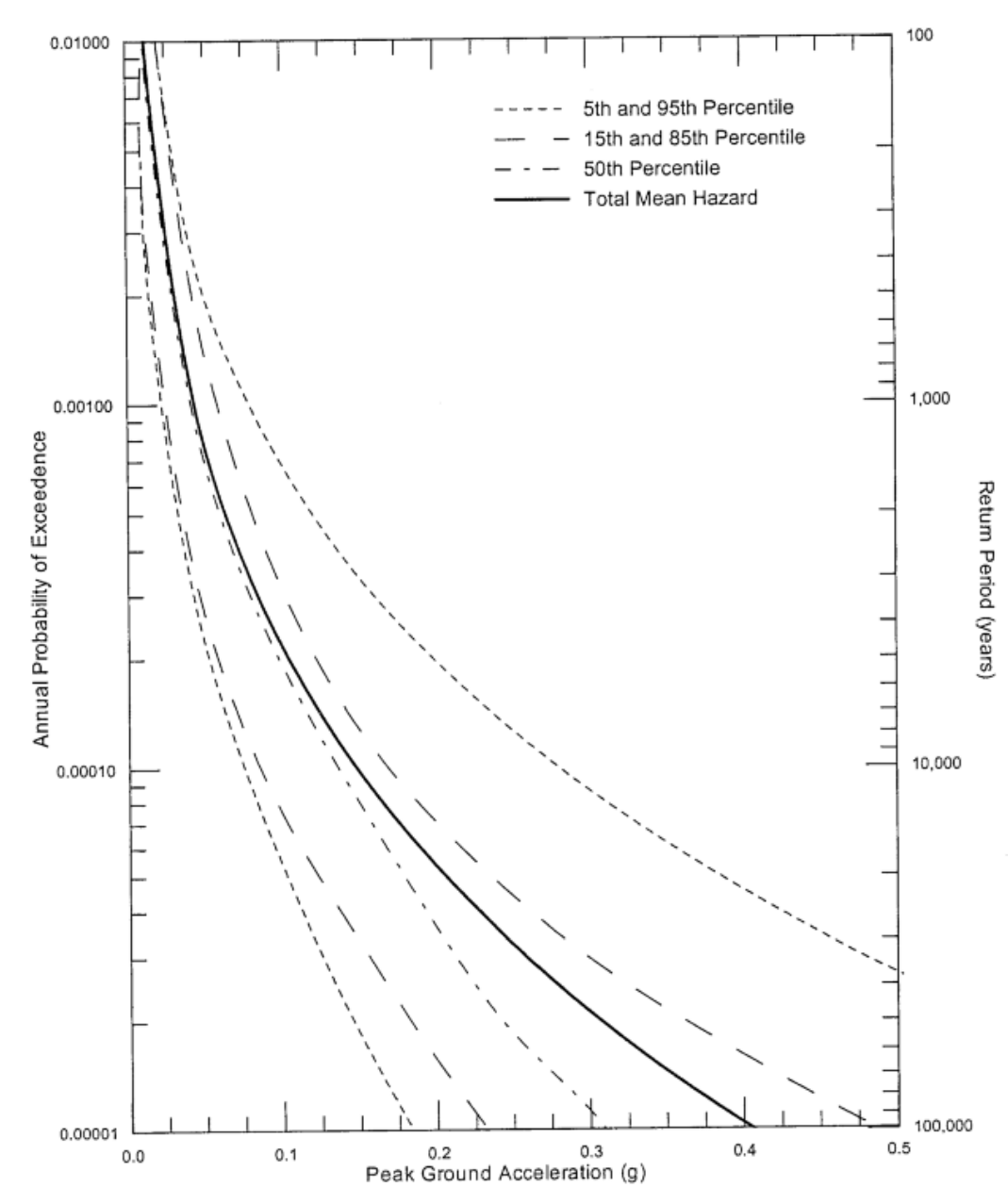

RECLAMATION

Estimate Response Probabilities

- Requires the most effort in risk analysis meeting
- Made by those most familiar with the behavior of the dam (experts/operators)
- The overall dam response is broken into smaller steps that are easier to understand and estimate (event tree)
- Analysis results are used when available
- Case histories are valuable in making estimates

RECLAMATION

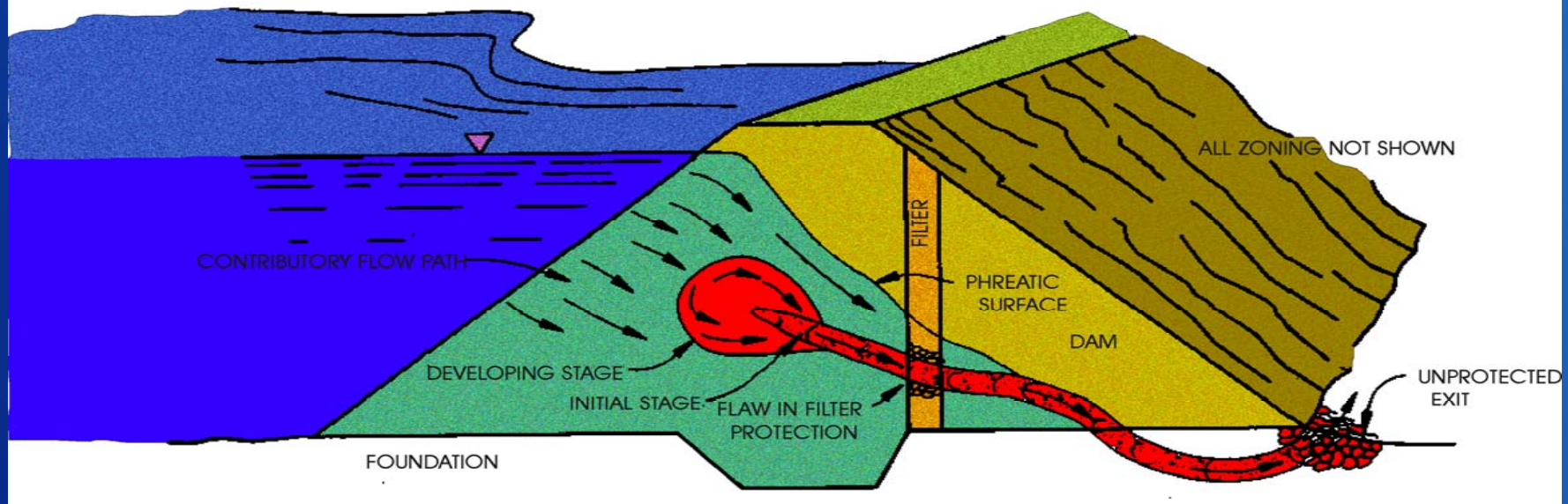

MECHANISM - 1
THROUGH EMBANKMENT

RECLAMATION

Static – Internal Erosion of Embankment Material

- Reservoir at or above threshold level
- Initiation – Erosion starts
- Continuation – Unfiltered or inadequately filtered exit exists
- Progression – Roof forms to support a pipe
- Progression – Upstream zone fails to fill crack
- Progression – Constriction or upstream zone fails to limit flows
- Intervention fails to prevent “break-through”
- Dam breaches

RECLAMATION

Risk Analysis Estimates

- Estimates are often limited by lack of information or analyses and studies – creates uncertainty
- Sensitivity studies can be performed to evaluate the impact of variability in key nodes

RECLAMATION

Risk Analysis Estimates

- Summarize What is Known and Not Known
- More Likely and Less Likely Factors are Identified
- A range of estimates is made for a given node

RECLAMATION

Static – Internal Erosion of Embankment Material

- Reservoir at or above threshold level
- Initiation – Erosion starts
- Continuation – Unfiltered or inadequately filtered exit exists
- Progression – Roof forms to support a pipe
- Progression – Upstream zone fails to fill crack
- Progression – Constriction or upstream zone fails to limit flows
- Intervention fails to prevent “break-through”
- Dam breaches

RECLAMATION

Static – Unfiltered or inadequately filtered exit exists

- More Likely Factors
  - Placement techniques may have resulted in segregation
  - Fines content greater than 10% and may allow a sustained crack
- Less Likely Factors
  - Gradation analysis indicates filter meets no erosion filter criteria
  - Multiple tests exist for both filter and base materials

RECLAMATION

Risk Estimates

- Virtually Certain – 0.999
- Very Likely – 0.99
- Likely – 0.9
- Neutral – 0.5
- Unlikely – 0.1
- Very Unlikely – 0.01
- Virtually Impossible – 0.001

RECLAMATION

Estimate Consequences

- Potential loss of life
  - Based primarily on affected downstream population, available warning time, and estimated severity of the flood wave
  - Better methods are needed for large populations with limited warning

RECLAMATION

Estimating Loss of Life

- Population at Risk can increase over time, which will likely increase loss of life estimates
- Loss of life for large population centers is difficult to estimate
  - Evacuation routes
  - Mobility of residents
  - Effectiveness of Emergency Action Plans
- Estimates are based on predicting human behavior

RECLAMATION

Identify Uncertainties and Estimate Risks

- Just as important to portray what we do **not** know
- Use ranges for estimates
- Review results. Do they make sense?
- **Build the Case**

$$\text{Risk} = (P_{event})(P_{response})(\text{consequences})$$

RECLAMATION

Risk Assessment

- Compare risk analysis results to available guidelines or criteria
- Reclamation has developed “Dam Safety Public Protection Guidelines”
- Identifies the highest components of risk
- Helps decide a prudent course of action

RECLAMATION

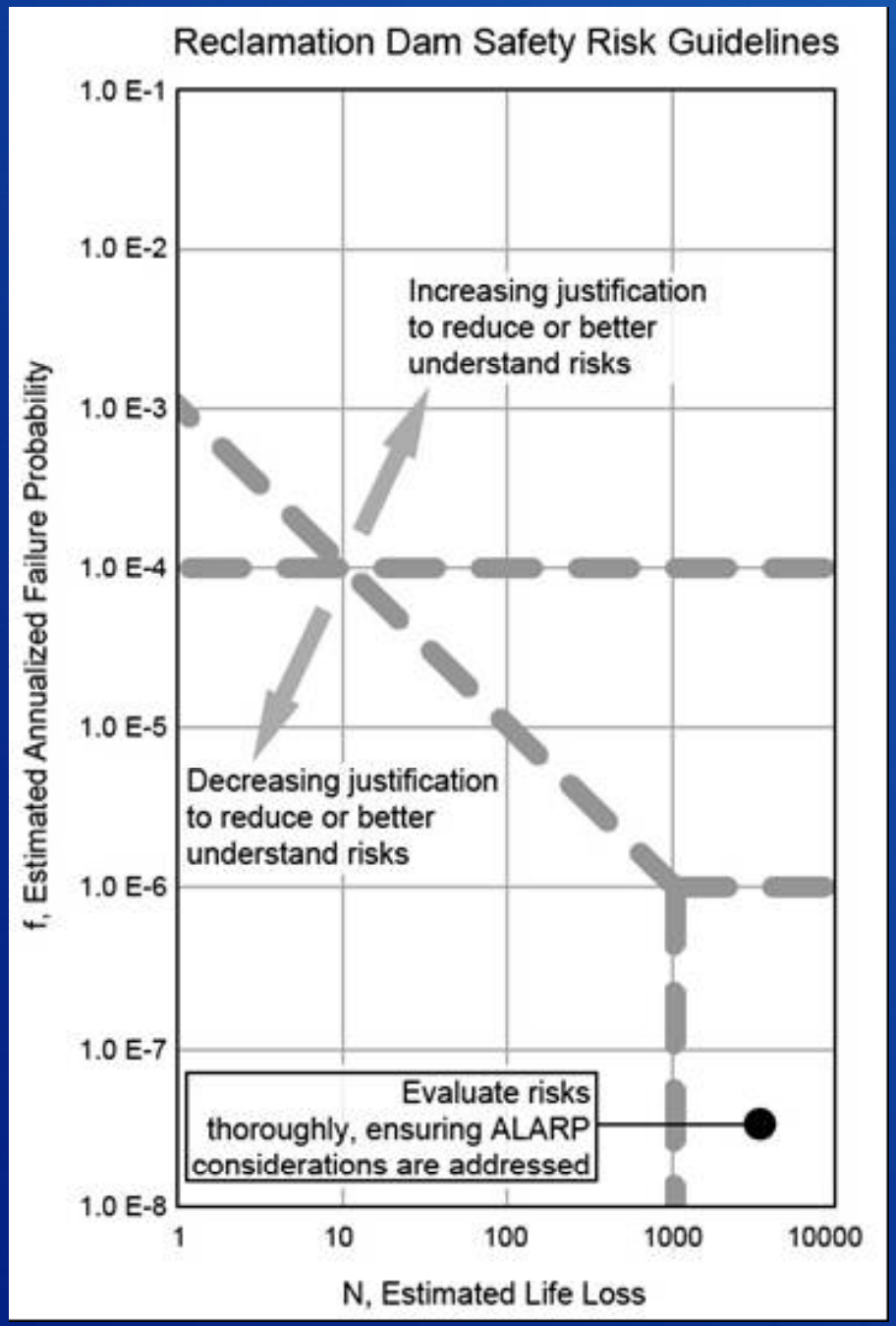

Reclamation Public Protection Guidelines

RECLAMATION

f-N Chart

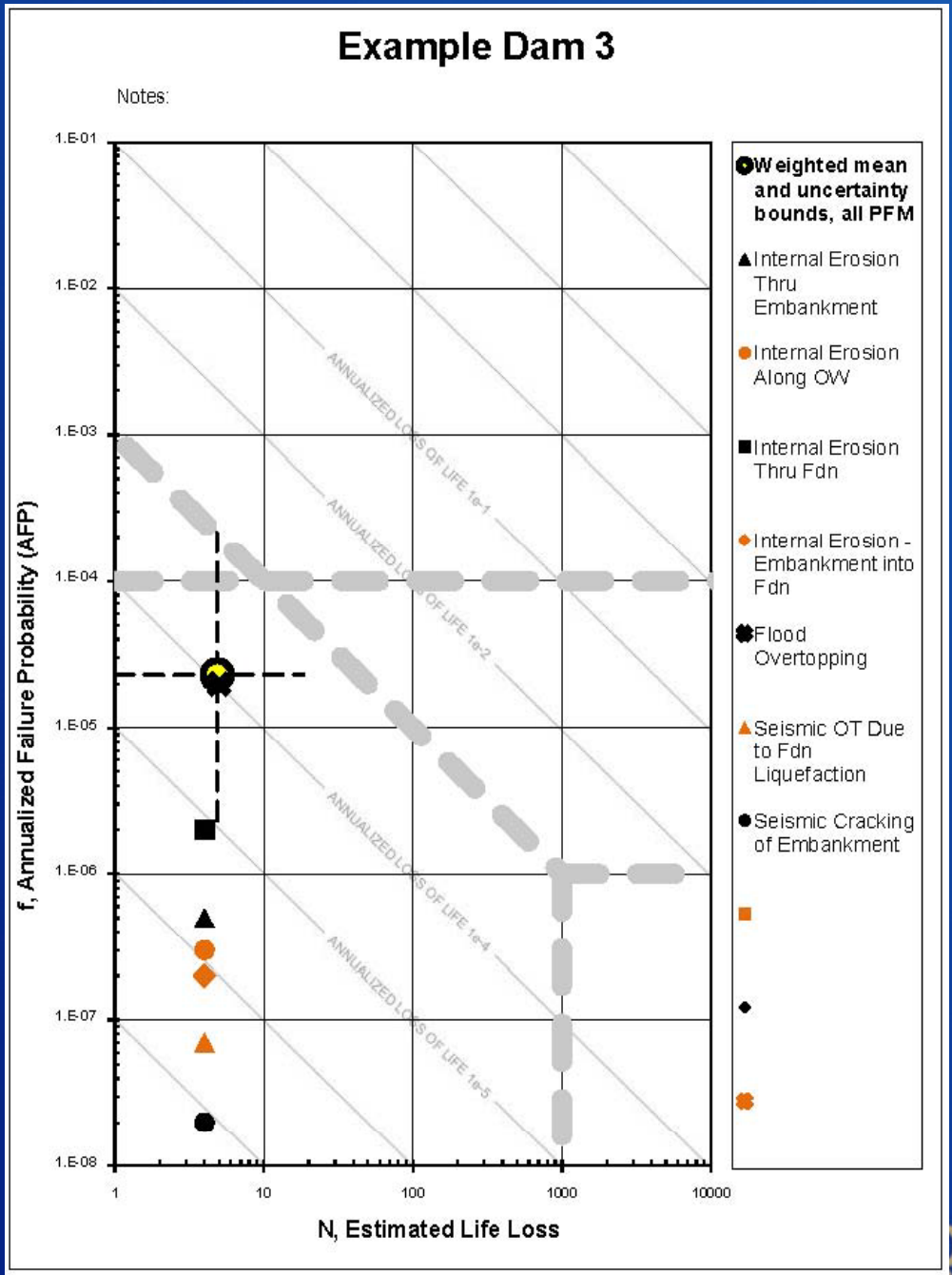

RECLAMATION

Benefits of Risk Based Decisions

- Helps prioritize actions, resulting in greatest reduction of public risk for funds expended
- Improves understanding of the problem
- Shows where key information may be missing
- Identify the corrective actions to take to reduce risk

RECLAMATION

More information about the
Bureau of Reclamation
can be found at:

Internet Website
www.usbr.gov

International Affairs
www.usbr.gov/international/

RECLAMATION