Northwest Area Water Supply

Minot Water Treatment Plant Improvements Project

Predesign Report
Specific Authorization No. 16

September 2007

MWH

NORTHWEST AREA WATER SUPPLY

MINOT WATER TREATMENT PLANT IMPROVEMENTS PROJECT

PREDESIGN REPORT
SPECIFICATION AUTHORIZATION No. 16

September 2007

TABLE OF CONTENTS

Description	Page No.
EXECUTIVE SUMMARY	**ES-1**
Introduction and Purpose	ES-1
Report Outline	ES-1
Phased Construction Approach for Minot WTP Improvements	ES-2
Key Facilities Decisions	ES-3
Recommended Design Criteria	ES-4
Opinion of Total Construction Costs and Total Project Costs	ES-4
SECTION 1 – PROJECT BACKGROUND AND PROJECT OBJECTIVE	1-1
SECTION 2 – EXISTING AND ANTICIPATED FUTURE SAFE DRINKING WATER ACT REQUIREMENTS AND REGULATIONS	2-1
2.1 Introduction	2-1
2.2 Source Water Quality Characterization	2-2
2.2.1 Raw Water Quality	2-2
2.2.2 Lake Audubon Water Source	2-2
2.3 Summary of 1997 Regulatory Audit	2-6
2.4 2004-2005 Regulatory Audit	2-9
2.4.1 Interim Enhanced Surface Water Treatment Rule (IESWTR)	2-9
2.4.2 Long Term 2 Enhanced Surface Water Treatment Rule (LT2ESWTR)	2-11
2.4.3 Stage 2 Disinfectants/Disinfection By-Products Rule	2-13
2.4.4 Filter Backwash Recycling Rule (FBRR)	2-15
2.4.5 Arsenic Rule	2-16
2.4.6 Radiologic Contaminants	2-16
2.4.7 Federally Monitored Unregulated Contaminants	2-17
2.5 Summary of Current Regulatory Impacts	2-18
SECTION 3 – PROCESS AUDIT AND INTEGRATION OF THE EXISTING MINOT WTP WITH NEW NAWS WATER SUPPLY	3-1
3.1 Introduction	3-1
3.2 Summary of 1997 Process Audit	3-1
3.3 2004-2005 Process Audit	3-3
3.3.1 Lake Sakakawea as Source of Supply	3-4
3.3.2 Treatment Process Modifications	3-5
3.3.3 Use of Selected Groundwater Wells as Backup/Emergency Supply	3-8
3.3.4 Ultraviolet Disinfection at the Minot WTP	3-8
3.3.5 Clearwell and High Service Pump Station(s)	3-9
3.3.6 Filter-to-Waste	3-10
3.3.7 Backwash Supply	3-11
3.4 Summary of Process Audit Issues and Recommendations	3-12

Table of Contents (continued)

Description	Page No.
SECTION 4 – RECOMMENDED WTP FACILITY IMPROVEMENTS	4-1
4.1 Background	4-1
4.1.1 Recommended Minot WTP Improvements	4-2
4.1.2 Recommended Design Criteria	4-3
4.2 Plant Hydraulics	4-3
4.2.1 Description of Existing Plant and Hydraulic Capacity	4-3
4.2.2 Current Operations Strategy and Hydraulic constraints	4-3
4.2.3 New NAWS Water Supply at High Pressure	4-9
4.2.4 Water Surface Elevation for New Clarifier	4-9
4.2.5 20-Inch Outlet Pipes on Existing Clarifier Create Hydraulic Restriction at 26 mgd	4-10
4.2.6 Effects of Backwash Water Requirements and New UV System on Existing Clearwell Storage	4-10
4.3 Influent Flow Control Facilities and Flash Mix	4-11
4.3.1 Description	4-12
4.3.2 Sleeve Type Pressure Reducing Valve	4-12
4.3.3 Basket Strainers for Construction Debris	4-13
4.3.4 Bypass Assembly for Sleeve Valve Maintenance	4-13
4.3.5 Flash Mix System	4-13
4.4 Pretreated Water Conveyance Improvements; Yard Piping and Indoor Piping	4-13
4.4.1 Description	4-13
4.4.2 Raw Water Pipeline Modifications Inside Building	4-14
4.4.3 Demolish Existing Aeration Systems	4-15
4.5 Chemical Feed Systems	4-15
4.5.1 Description	4-15
4.5.2 Primary Coagulant & Coagulant Aid	4-17
4.5.3 Lime Softening Clarification	4-17
4.5.4 Tetra Sodium Pyrophosphate	4-20
4.5.5 Carbon Dioxide / Recarbonation	4-21
4.5.6 Chlorine Gas and Hypochlorite	4-21
4.5.7 Polyphosphate; Sodium Silicofluoride; Ammonium Sulfate	4-21
4.5.8 Potassium Permanganate and Sodium aluminate	4-22
4.6 New Softening / Clarifier Facility	4-22
4.6.1 Background on Line Softening Process	4-22
4.6.2 Existing Recarbonation Systems	4-23
4.6.3 New Recarbonation System	4-24
4.6.4 New 10 mgd Softening-Clarifier	4-24
4.7 Filtration and Filter Backwash System Upgrades	4-28
4.7.1 Existing Filter system Description	4-28
4.7.2 Filter System Modifications and Recommendations	4-28
4.7.3 Filter-to-Waste Improvements	4-30
4.8 Equalization Basin Improvements	4-31
4.8.1 Description of Existing Facilities	4-31

Table of Contents (continued)

Description	Page No.
4.8.2 Evaluation of the Existing EQB	4-31
4.8.3 Determine of FBW Volumes/Day	4-32
4.8.4 Capacity of Existing EQB is Below Industry Standard	4-33
4.8.5 Capacity of Existing EQB Pumps and Piping	4-34
4.9 New Finished Water Reservoir and High Service Pump Station (HSPS) Facility	4-36
4.9.1 Description	4-36
4.9.2 New Finished Water Reservoir Alternative Locations	4-37
4.9.3 Locating New MP UV Facility in Existing Sub-Basement	4-37
4.9.4 Decision Matrix Comparison of Alternatives	4-38
4.9.5 Recommendation for New Reservoir / HSPS Site	4-38
4.9.6 Conceptual Layout of New Reservoir / HSPS and UV Facility	4-38
4.10 Post-Filtration UV Disinfection System Options	4-40
4.10.1 Current UV Manufacturers	4-40
4.10.2 UV System Design Approach	4-41
4.11 Location Options for New UV Disinfection System	4-43
4.11.1 Option A. New UV System Installed in New Reservoir / HSPS Facility	4-44
4.11.2 Option B. New MP UV System Installed in Existing Basement Area	4-44
4.12 Solids Dewatering and Disposal	4-45
4.12.1 Description of Existing Facilities	4-45
4.12.2 Excess Lime Softening & Magnesium Carbonate Hardness Removal	4-46
4.12.3 Predesign Evaluation of Existing Solids Dewatering and Disposal Processes	4-47
4.12.4 Estimate Sludge Generation Quantities from Existing Local Aquifer Supplies and Proposed Lake Sakakawea Supply	4-47
4.12.5 Evaluation of Plate & Frame Press Cycle time and Operations	4-49
4.12.6 Comparison of Operations and Annual O&M Costs for Sludge Dewatering & Disposal	4-52
4.12.7 Summary of Predesign Evaluation and Recommendations	4-55
4.13 Plant Electrical System Improvements	4-55
4.13.1 Background / Existing Facilities	4-55
4.13.2 New Facilities	4-57
4.14 SCADA System Improvements	4-59
4.15 Wellfield Improvements for Reliable Emergency Source	4-60
4.16 Souris River Pump Station Improvements	4-61
4.17 Additional Administrative and Operator Work Space	4-61
4.18 Plant HVAC Improvements	4-61
4.19 Civil Site and Plant Access Improvements	4-62

Table of Contents (continued)

Description	Page No.
SECTION 5 – CONSTRUCTION PHASING PLAN & COST OPINIONS	5-1
5.1 Introduction	5-1
5.2 Minot WTP Phase 1 Improvements Project	5-2
5.3 Minot WTP Phase 2 Improvements Project	5-4
5.4 Minot WTP Phase 3 Improvements Project	5-7
5.5 Annual WTP Operations Costs	5-9

APPENDIX A – Filter Backwash, EQB and FTW Calculations
APPENDIX B – Department of Interior Letters

Table of Contents (continued)
LIST OF TABLES

Table No.	Description	Page No.
ES-1	Phase 1, 2 & 3 Preliminary Design Criteria	ES-5
ES-2	Construction Cost Opinion	ES-11
ES-3	Comparisons of WTP Operations Costs on Current GW Supply vs. Future Sakakawea Supply	ES-15
2-1	Lake Audubon and Lake Sakakawea Raw Water Sample Results	2-3
2-2	Lake Audubon Contaminants Above Regulatory Levels	2-6
2-3	(Same as Table 3-4 of the 1997 WTP Evaluation Report) Summary of Anticipated Regulatory Impacts of the Missouri River Supply for Treatment at the Minot WTP	2-8
2-4	LT2ESTR Treatment Requirements for Conventional Plants	2-12
2-5	Radiologic Contaminants and Maximum Contaminant Levels	2-17
2-6	Unregulated Contaminant Monitoring Rule Monitoring List	2-18
4-1	Phases 1, 2 and 3 Preliminary Design Criteria	4-4
4-2	Treatment Chemical Summary	4-16
4-3	Lime Consumption at Various Flow Rates and Dosage Rates	4-19
4-4	Estimated No. of Filter Backwash Volumes Required per Day	4-33
4-5	New Reservoir/UV System Alternatives Decision Matrix Issues	4-39
4-6	New Reservoir/UV System Alternatives Decision Matrix Weighted Score	4-39
4-7	Yr 2003, Minot WTP Solids Generation Estimates (Current Estimates Based upon WTP Treating Existing Groundwater Well Supplies)	4-48
4-8	Yr 2003, Minot WTP Solids Generation Estimates (Assumes NAWS Project in Operation and WTP Treating Lake Sakakawea Water)	4-50
4-9	Future Minot WTP Solids Generation Estimates (Assumes NAWS Project in Operation and WTP Treating Lake Sakakawea Water)	4-51
4-10	Annual O&M Costs to Dewater & Dispose of Sludge	4-57
5-1	Construction Cost Opinion for Phase 1 Improvements Project	5-3
5-2	Construction Cost Opinion for Phase 2 Improvements Project	5-5
5-3	Construction Cost Opinion for Phase 3 Improvements Project	5-8
5-4	Comparison of WTP Operations Costs on Current Groundwater Supply vs. Future Lake Sakakawea Supply	5-10

Table of Contents (continued)
LIST OF FIGURES

Figure No.	Description	Following Page No.
4-1	Process Flow Diagram - 1	4-2
4-2	1.0 Million Gal East Side Reservoir Process Flow Diagram - 2	4-2
4-3	New Influent flow control Facility Concept Plan	4-9
4-4	Existing 12 mgd Clarifier & Recarbonation Train Hydraulic Profile	4-9
4-5	New Clarifier & Recarbonation Train Option 1 – Hydraulic Profile	4-9
4-6	East Side Reservoir Alternative No. 1 Hydraulic Profile w/UV in Existing Basement	4-10
4-7	East Side Reservoir Alternative No. 1 Hydraulic Profile w/UV Next to Reservoir	4-10
4-8	New IFCF & Clarifier Building alternative 1 – Site Plan	4-14
4-9	New IFCF & Clarifier Building Alternative 2 – Site Plan	4-14
4-10	New IFCF & Clarifier Building Alternative 1 - Plan	4-24
4-11	New IFCF & Clarifier Building Alternative 2 - Plan	4-24
4-12	New IFCF & Clarifier Building Alternative 1 - Sections	4-27
4-13	Existing Filter Profile	4-28
4-14	Influence of Limiting Unit Filter Run Volume and Unit Backwash Volume on Production Efficiency	4-32
4-15	Reservoir Alternatives Site Plan	4-36
4-16	Existing HS Pump Station Basement Area MP UV System Layout Alternative	4-37
4-17	East Side Reservoir Alternative No. 1A Plan	4-38
4-18	East Side Reservoir Alternative 1A Upper Level Plan	4-38
4-19	East side Reservoir Alternative 1A Lower Level Plan	4-38
4-20	East Side Reservoir Alternative 1A Section	4-40

Executive Summary

MINOT WTP IMPROVEMENTS PROJECT

EXECUTIVE SUMMARY

INTRODUCTION AND PURPOSE

The purpose of this predesign report is to present the results of predesign engineering and design criteria development for the Minot Water Treatment Plant (Minot WTP) to be used as the basis for preparing final design bid documents. The report is based on the information drafted in December, 1997 that addressed the issues and opportunities for incorporating the Minot WTP into the Northwest Area Water Supply (NAWS) project as the regional water treatment plant. That document – *Northwest Area Water Supply Project Minot WTP Evaluation and Facilities Plan – Specific Authorization No. 19* was developed to describe the existing facilities at the Minot WTP, provide a Regulatory, Process and Situation Audit of the plant, and provide a conceptual Facility Plan for the changes required to accommodate the NAWS production requirements and the proposed new water supply.

Since the preparation of the SA No. 19 report in 1997, a number of regulatory and plant conditions have changed that affect the Minot WTP Improvements Project. Regulatory changes include revisions to the Safe Drinking Water Act (SDWA) rules, including introduction of the Long Term 1 Enhanced Surface Water Treatment Rule (LT1ESWTR) and the subsequent LT2ESWTR. Also, criteria on disinfection by-products have been modified per the Stage 2 Disinfection Byproduct Rules.

Plant changes include upgrades to some equipment at the Minot WTP. The Minot WTP is now eight years older and some of the equipment that was evaluated in 1997 has been replaced. Also, Lake Sakakawea was selected as the best Missouri River source water for the NAWS project based upon water quality and engineering treatment criteria.

This report provides a review and compilation of SA No. 19 and subsequent draft Technical Memoranda that have been distributed for review and comment. This report also documents the revisions necessary to bring the previous analyses, for the three audit areas (Regulatory, Process, and Existing Situation Audits), up to date with the facility's current conditions as well as the current regulations. Finally, this report provides preliminary design criteria and preliminary drawings of new major facilities recommended such that the Minot WTP will be able to reliably serve as the NAWS regional water treatment facility.

REPORT OUTLINE

This report is divided into five sections that cover the following:

Section 1 – Project Background and Objectives

Section 2 – Existing and Anticipated Future Safe Drinking Water Act Requirements and Regulations

Section 3 – Process Audit and Integration of the Existing WTP with the new NAWS Water Supply

Section 4 – Recommended WTP Facility Improvements

Section 5 – Construction Phasing Plan & Construction Cost Opinions

PHASED CONSTRUCTION APPROACH FOR MINOT WTP IMPROVEMENTS

Implementing the modifications and additions to the Minot WTP necessary for treatment of the new Lake Sakakawea pretreated water supply requires a phased construction approach to meet the growing water supply needs of the participants and to match the financial and service area constraints of the NAWS project. These project needs and improvements are organized into three construction phases as described below.

Minot WTP Phase 1 Improvements Project. Construct a new finished water reservoir and High Service Pump Station (HSPS) facility to provide 18 mgd of treated water service capacity to the City of Minot and a limited number of NAWS contract users. Minot's current groundwater supplies will be used to meet these demands prior to completion of the Phase 2 Improvements Project. Major new facilities associated with this Phase 1 project include:

- Construct a new 1.0 to 2.0 million gallon clearwell / reservoir located on east side of 16th street. Designing for a reservoir volume over 1.5 million gallons will require either relocation of an existing 18/24-inch potable water transmission pipeline (depending upon the limits of the city property at this site) or designing the clearwell to greater depths requiring structural underdrain systems and possible foundation shoring to protect the railroad easement.
- Construct a new HSPS facility to consist of a set of vertical turbine pumps for the City of Minot distribution system (approximately 90 psig) and a set of vertical turbine pumps for the NAWS distribution system (approximately 150 psig). This HSPS will include independent surge control facilities for both systems, new electrical service, and an approximate 7,600 sq ft building to house the pumps, surge control facilities, and electrical equipment / MCC gear for the new pumps.
- The HSPS will be designed to include space for a potential 26 mgd UV disinfection system in the lower level of the building.

Minot WTP Phase 2 Improvements Project. Construct high-priority necessary plant modifications to improve plant reliability and to make the transition to be able to treat 18 mgd of Lake Sakakawea water. Major new facilities associated with this Phase 2 project include:

- A new Influent Flow Control Facilities (IFCF) including new sleeve valve, plant flash mix system and flow metering system to receive pretreated water from the NAWS supply pipeline.

- A new 11,500 sq ft IFCF & Clarifier Building to house the Phase 3 new 10 mgd conventional clarifier and new centralized coagulation and polymer chemical feed facilities.
- Yard piping improvements including new 30-inch pretreated NAWS supply yard pipe and new 30-inch pretreated raw water pipe to existing well water supply pipe.
- Filter system improvements including new dual media, underdrains, filter gallery pipe and valve replacement, and new filter-to-waste capabilities.

Minot WTP Phase 3 Improvements Project. Construct lower-priority plant modifications to improve plant reliability and construct the plant expansion modification to treat the ultimate peak day flow of 26 mgd using Lake Sakakawea water. Major new facilities associated with this Phase 3 project include:

- New 10 mgd clarifier facility (concrete exterior shell constructed as part of Phase 2 project.)
- New CO_2 sidestream injection systems for all three clarifiers
- Modifications to existing lime feed system / addition of new recirculating closed-loop lime slurry system.
- Addition of one more vertical turbine pump to each of the two sets of high service pumps, to bring firm capacity of the system up to 26 mgd.

Sections 4 and 5 provide further details of construction components included in each of these project phases.

KEY FACILITIES DECISIONS

For several of the new treatment processes and facilities, we have evaluated different alternatives, providing pros and cons and cost comparisons for each alternative. The following list provides a summary of key decisions that need to be made by the project team (i.e., North Dakota State Water Commission, the City of Minot, and the project design engineers) prior to beginning final design of that specific phase:

For Phase 1 Improvements Project, key decisions include:

- Desired volume of new reservoir (1.0 MG vs. 1.5 MG vs. 2.0 MG)?
- Desired location of possible new UV system (east side of 16th St. vs. existing sub-basement)?
- Desired location of new NAWS Control Room (new control room in upper level of new reservoir / HSPS or in new building addition area near entrance to main WTP)?
- Desired routing of new 13.8 kV electrical service to new reservoir / HSPS transformer (south of plant overhead, south of plant underground parallel to 42” pipe, north of plant overhead, or north of plant underground.)? (This decision will require project team meeting with Xcel Energy to understand their perspective.)

For Phase 2 Improvements Project, key decisions include:

- Desired type of new 10 mgd softening clarifier (low-rate conventional vs. high-rate DensaDeg type unit.)? Concrete exterior walls of clarifier at minimum must be built as part of Phase 2 project – along with pipe spools for inlet, outlet, drains)?
- Install new clarifier mechanism (inlet zone, launders, mixing turbine, rack arms and drive, sludge pump(s), etc) as part of Phase 2 project or Phase 3 project?
- Desired location of new main electrical switchgear / MCC for plant (inside new IFCF clarifier building at southeast corner or remain in location of existing filter area and main plant entrance)?
- Finalize conceptual layout for building modification needs to south entrance of plant (what type of new administrative and control room facilities, and what square footage desired for each.)?

For Phase 3 Improvements Project, key decisions include:

- Utilize the 2002 existing volumetric W&T paste slakers with minor adjustment to feed new lime slurry tank(s) vs. go to complete new gravimetric slaker system with total dust containment? (Both of these would feed new recirculating lime slurry tank / pump system.)
- Finalize on which of existing wells are best to maintain as backup supply and whether or not backup emergency generator power should be provided to these wells or not? (Engine generator at the well head or portable engine generator stored in shop location.)
- Where to haul dewatered sludge? (lined cell at the existing City of Minot landfill or new newly developed sludge pits on south side of water shed divide) (This decision is not critical to designing Phase 3 Improvements, and can be made any time during or after completion of Phase 3 project.)

RECOMMENDED DESIGN CRITERIA

Table ES-1 provides a summary of MWH / HE's recommended Preliminary Design Criteria for all phases of the Minot WTP Improvements Project. This design criteria will form the engineering basis for final design of all plant improvements. It is important that the design criteria be carefully reviewed by all parties and any required changes to the criteria be made before the initiation of final design work.

OPINION OF TOTAL CONSTRUCTION COSTS AND TOTAL PROJECT COSTS

For each of the three project phases, Table ES-2 provides a predesign level opinion of Total Construction Cost and Total Project Cost for the Minot WTP Improvements Projects. These cost opinions are given in current third quarter 2005 dollars, and are not escalated to account for the actual timing of each construction phase. The Total Construction Cost opinions include a 10 percent estimating and construction contingency. The Total Project Cost Opinions include an

TABLE ES-1

MINOT WTP IMPROVEMENTS PROJECT
PHASE 1, 2 & 3 PRELIMINARY DESIGN CRITERIA

	Units	Phases 1 & 2	Phase 3	Comments
Plant Design Flow Capacities				
Max. Day Flow	mgd	18	26	
Avg. Day Flow	mgd	-	10.5	
Min. Day Flow	mgd	4	4	
Raw Water Supplies				
Primary Surface Water Supply				**New**
Source Lake	-	Sakakawea	Sakakawea	
Total Pump Capacity	mgd	18	26	
Backup Groundwater Supply				Existing
Source Aquifer	-	Sundre/Minot	Sundre/Minot	(14 wells)
Total Well Pump Capacity	mgd	17.7	17.7	
Influent Flow Control Facilities				**New**
Control Valve Type	-	Sleeve	Sleeve	Bailey or equal
Valve Diameter	in	18	18	
Static Pressure @ 0 Flow	psig	150	150	
Pres Reduction @ Max Flow	psig	~95	~70	
Pres Reduction @ Min Flow	psig	150	150	
Bypass Pipe Dia.	in	18	18	
Bypass Max. Velocity	fps	12	12	Prevent Cavitation
Bypass Max. Velocity Flow	mgd	13.4	13.4	
Flash Mix (Pressurized Side Stream)				**New**
% of Max Day Flow	%	4	4	Gravity Flow
Flow	gpm	500	725	Adjustable
Mixing Intensity, G	1/sec	~1,000	~1,000	
Influent Flow Meters				
NAWS Lake Sakakawea	in	30	30	**New - Mag**
Sundre & Minot Aquifers	in	30	30	Existing
Wells 5 and 6	in	12 or 18?	12 or 18?	Existing
Souris River	in	Abandon	Abandon	
Aeration Towers		Remove	Remove	

TABLE ES-1

MINOT WTP IMPROVEMENTS PROJECT
PHASE 1, 2 & 3 PRELIMINARY DESIGN CRITERIA

	Units	Phases 1 & 2	Phase 3	Comments
Accelator Softening Clarifier & Recarb Basin				Exist., Conventional
Dimensions	ft x ft	60 x 60	60 x 60	
Water Depth	ft	16.75	16.75	
Trough Effective Rise Area	sq ft	2,620	2,620	
Design Flow	mgd	6.0	5.0	
Surface Loading Rate	gpm/sf	1.60	1.33	
Volume	gal	320,000	320,000	
Detention Time	min	77	92	
Recarbonation Basin				Existing
Dimensions (w x l)	ft x ft	15 x 46	15 x 46	
Water Depth	ft	14	14	
Volume	gal	72,000	72,000	
Design Flow	mgd	6	5	
Detention Time	min	17.3	20.7	Theoretical plug flow
Walker Softening Clarifier & Recarb Basin				Exist., Conventional
Dimensions	ft x ft	84.5 x 86.5	84.5 x 86.5	
Water Depth	ft	19	19	
Trough Effective Rise Area	sq ft	6,050	6,050	
Design Flow	mgd	12.0	11.0	
Surface Loading Rate	gpm/sf	1.38	1.26	
Volume	gal	600,000	600,000	
Detention Time	min	72	78	
Recarbonation Basin				Existing
Dimensions (w x l)	ft x ft	14 x 84	14 x 84	
Water Depth	ft	14	14	
Volume	gal	123,000	123,000	
Design Flow	mgd	12.0	11.0	
Detention Time	min	14.8	16.1	Theoretical plug flow
New Softening Clarifier (Conventional, Low-Rate Option)				**New**
Dimensions	ft x ft	-	78' x 78'	Conventional
Water Depth	ft	-	19.33	
Trough Effective Rise Area	sq ft	-	5,560	
Design Flow	mgd	-	10.0	

TABLE ES-1

MINOT WTP IMPROVEMENTS PROJECT
PHASE 1, 2 & 3 PRELIMINARY DESIGN CRITERIA

	Units	Phases 1 & 2	Phase 3	Comments
Surface Loading Rate	gpm/sf	-	1.25	
Volume	gal	-	~560,000	
Detention Time	min	-	81	
New Softening Clarifier (DensaDeg, High-Rate Option)				**New**
Dimensions	ft x ft	-	42' x 39'	IDI Model 10 or Eq.
Water Depth	ft	-	19.44	
Settling Tube Rise Area	sq ft	-	930	
Design Flow	mgd	-	10.0	
Settling Tube Loading Rate	gpm/sf	-	7.50	
Volume	gal	-	~300,000	
Detention Time	min	-	43	
New Recarbonation Basin				**New**
Dimensions (w x l)	ft x ft	-	8 x 34	
Water Depth	ft	-	18	
Volume	gal	-	35,000	
Design Flow	mgd	-	10.0	
Detention Time	min	-	5.0	Theoretical plug flow
Filters				Existing
Type	-	Granular Media, Gravity, Rate-of-Flow		
Number	No.	12	12	
Dimensions	ft x ft	20 x 18	20 x 18	
Surface Area	sq ft/filt	360	360	
Total Surface Area	sq ft	4,320	4,320	
Filter Media				**New**
Anthracite				
Depth	in	20	20	
Effective Size, d_{10}	mm	1.0 to 1.1	1.0 to 1.1	
Specific Gravity	-	1.62	1.62	
Uniformity Coef.	-	< 1.4	< 1.4	
Sand				

TABLE ES-1

MINOT WTP IMPROVEMENTS PROJECT
PHASE 1, 2 & 3 PRELIMINARY DESIGN CRITERIA

	Units	Phases 1 & 2	Phase 3	Comments
Depth	in	10	10	
Effective Size, d_{10}	mm	0.45 to 0.55	0.45 to 0.55	
Specific Gravity	-	2.65	2.65	
Uniformity Coef.	-	< 1.4	< 1.4	
Filtration Rate				**New**
Flow Rate per Filter	mgd	1.50	2.17	All in Service
All in Service	gpm/sf	2.9	4.2	
One Out of Service	gpm/sf	3.2	4.6	
Filter Backwash Pumps				**New**
Type	-	End-Suction Centrifugal		Constant Speed
No.	No.	2	2	1 duty + 1 standby
Pump Capacity	gpm	6,800	6,800	at 18.8 gpm/sf BWR
Backwash Rate at 3C	gpm/sf	16.5	16.5	
Backwash Rate at 20C	gpm/sf	18.8	18.8	
Duration	min	7 to 8	7 to 8	
Volume Per Filter BW	gal	50,400	50,400	19 gpm/sf for 7 min
TDH	ft	40	40	
Pump Horsepower (ea)	hp	100	100	
Surface Wash				Existing
Type	-	(Rotating Arm)		
Wash Rate	gpm/sf	0.7	0.7	
Duration	min	3 to 4	3 to 4	
Volume Per Filter BW	gal	750	750	0.7 gpm/sf for 3 min
Filter-to-Waste				**New**
Duration	min	20	20	
Volume Per Filter BW	gal	21,600	21,600	3 gpm/sf for 20 min
Backwash Equalization Basin				Existing
Washwater Holding Tank	No.	1	1	Round w/2 Cells
Diameter	ft	32	32	
Max Water Depth	ft	18	18	
Volume on Recycle Side	gal	81,000	81,000	
Volume on Sludge Side	gal	24,000	24,000	

TABLE ES-1

MINOT WTP IMPROVEMENTS PROJECT
PHASE 1, 2 & 3 PRELIMINARY DESIGN CRITERIA

	Units	Phases 1 & 2	Phase 3	Comments
Volume per Backwash	gal	72,000	72,000	Includes FTW
Backwashes Held	No.	1.5	1.5	
Recycle Pumps (RP) to Influent				**New**
RP-1 Capacity	gpm	300	300	Constant Speed
RP-2 Capacity	gpm	530	530	Constant Speed
RP-3 Capacity	gpm	530	530	Constant Speed
Time to Empty Recycle Tank	hrs	1.6	1.6	(RP-3 in standby)
Sludge Pumps (SP) to Thickener				**New**
SP-1 Capacity	gpm	175	260	New Pumps Phase 3
SP-2 Capacity	gpm	175	260	New Pumps Phase 3
Time to Empty Sludge Tank	hrs	2.3	1.5	(SP-2 in standby)
Clearwell (Under Filters)				Existing
Dimensions	ft x ft	64 x 132	64 x 132	
Min. Water Depth	ft	4.0	4.0	Set by UV weir
Max. Water Depth	ft	10.2	10.2	
Vol. Available for BW	gal	130,000	130,000	
Vol. Available for HS Pumps	gal	400,000	400,000	at max. water depth
UV Disinfection Facility (LP or MP)				**New**
No. of Reactors	No.	2	2	1 duty + 1 standby
Flow Capacity per Reactor	mgd	26	26	
Max Headloss at Design Flow	inches	7	10	
Design UV Transmittance	%	90	90	*
* may be significantly lower from Nov. 2005 Bench Scale Study Results - finalize during design				
UV Dose @ EOLL + Fouling	mJ/cm^2	32	32	
End of Lamp Life (EOLL)	-	0.75	0.75	
~ Power Draw per LP Reactor	kw	21	30	at EOLL
~ Power Draw per MP Reactor	kw	55	80	at EOLL
HS Pump Station Reservoir (1 MG Option)				**New**
No. of Cells	No.	2	2	
Dimensions Ea. Cell	ft x ft	50 x 90	50 x 90	
Min. Water Depth	ft	2	2	WSEL 1547.0
Max. Water Depth	ft	15	15	WSEL 1560.0

TABLE ES-1

MINOT WTP IMPROVEMENTS PROJECT
PHASE 1, 2 & 3 PRELIMINARY DESIGN CRITERIA

	Units	Phases 1 & 2	Phase 3	Comments
Storage at Min Water Depth	gal	67,000	67,000	per cell
Storage at Max. Water Depth	gal	505,000	505,000	per cell
High Service Pumps (to Existing Minot Distribution)				**New**
Type	-	Vert. Turbines	Vert. Turbines	
No.	No.	4	4	3-duty + 1 stand-by
Total Firm Pumping Capacity	mgd	9.6	9.6	duty pumps only
Design Head	ft	208	208	90 psig
No. of Large Pumps	No.	2	2	1 stand-by
Large Pump Capacity (ea)	mgd	6.2	6.2	4,300 gpm ea
Large PumpHorsepower (ea)	hp	300	300	4,160 VAC, constant sp
No. of Small Pumps	No.	2	2	0 stand-by
Small Pump Capacity (ea)	mgd	2.0	2.0	1,400 gpm ea
Small Pump Horsepower (ea)	hp	100	100	480 VAC, constant sp.
High Service Pumps (to new NAWS Distribution)				**New**
Type	-	Vert. Turbines	Vert. Turbines	
No.	No.	4	5	3,4-duty +1 stand-by
Total Firm Pumping Capacity	mgd	10.2	16.4	duty pumps only
Design Head	ft	346	346	150 psig
No. of Large Pumps	No.	2	3	1 stand-by
Large Pump Capacity (ea)	mgd	6.2	6.2	4,300 gpm ea
Large PumpHorsepower (ea)	hp	500	500	4,160 VAC, constant sp
No. of Small Pumps	No.	2	2	0 stand-by
Small Pump Capacity (ea)	mgd	2.0	2.0	1,400 gpm ea
Small Pump Horsepower (ea)	hp	150	150	480 VAC, constant sp.

TABLE ES-2

MINOT WTP IMPROVEMENTS PROJECT
CONSTRUCTION COST OPINION

PHASE 1 PROJECT CONSTRUCTION COMPONENTS	2005 COST OPINION*
1. New 1.0 MG Clearwell & Lower Mechanical Room	$1,800,000
2. New 7,600 sf HSPS and Electrical Building (upper level only) at $140/sf (includes HVAC, building electrical; Excludes pump & surge facilities, process equipment, piping, and I&C)	$1,060,000
3. New HSPS Mechanical w/ Surge Tanks, (includes vertical pumps w/ space for 5th future pump on NAWS facilities)	$1,200,000
4. New 24-inch TW transmission line interconnection pipeline	$60,000
5. New 30-inch Minot potable line from HSPS to new intertie	$30,000
6. New 42-inch clearwell penetration and sub-basement piping	$100,000
7. New 42-inch FW yard piping and 16th Street crossing (Jack & Bore) to New Clearwell / HSPS	$350,000
8. New 36-inch NAWS potable line from HSPS to north edge of Minot WTP property (prior to river crossing)	$100,000
9. New high voltage 13.8 kV service to HSPS transformer area	Cost not included.
10. 1 New 2.0 to 2.3 MVA, 13.8 kV to 4,160 VAC Pad Transformer & 1 New 0.3 to 0.4 MVA 13.8 kV to 480 V Pad Mount Transformer	$120,000
11. New 5 kV Switchgear, MCC and soft starters for 8 pumps	$480,000
12. Backup 1.0 MW Generator for HSPS and associated Switchgear (run ~ half of total pump load)	$500,000
13. Demolish existing HSPS Equipment and Piping (after new clearwell and PS is operational)	$60,000
14. Replace 36" filter inlet channel tee and modify piping as necessary	$100,000
15. Electrical Sitework / General	$350,000
16. Civil / Sitework (includes paving new access road to HSPS)	$400,000
17. 2 New end-suction Backwash Pumps w/valves & piping; Demo existing pump and valves and necessary piping	$300,000
18. Instrumentation and SCADA Improvements (include new LCP for BW pumps)	$350,000
Phase 1 Subtotal of Construction Cost Opinion (2005)*:	**$7,360,000**
Construction Contingency (10% of Subtotal CCO)	$740,000
Phase 1 Total Construction Cost Opinion (2005):**	**$8,100,000**

TABLE ES-2 (Continued)

PHASE 2 PROJECT CONSTRUCTION COMPONENTS	2005 COST OPINION*
1. New UV Disinfection System	$1,100,000
2. New 11,000 sf IFCF & Clarifier Building at $140/sf (includes HVAC, building electrical; Excludes IFCF & process mechanical equipment, piping, clarifiers, and process electrical and I&C)	$1,540,000
3. All subgrade concrete (walls & floor) for IFCF & Clarifier Building	$550,000
4. New Settled Water Channel to Filter Inlet Channel and New IFCF Building Connection Corridor	$200,000
5. New IFCF Bailey Polyjet Sleeve Valve (or equal)	$110,000
6. New IFCF Facilities including Basket Strainers, Flash Mix, Bypass, Inlet 24" Pipe to Clarifier & piping, valves, and Flow Meters	$300,000
7. New IFCF Facility monorail system	$30,000
8. New Centralized Coagulation and Polymer chemical feed facilities for all Clarifiers	$500,000
9. New 30-inch pretreated water pipes to new ICFC inlet and to existing 30-inch raw water line from wells	$250,000
10. Yard pipe connection (new 30-inch pretreated water to exist 30-inch well supply; 1 new buried isolation butterfly valve)	$50,000
11. New 10-inch recycle pipe from EQ basin to new IFCF & Clarifier Bldg.	$50,000
12. New elect. actuators on RW valves in existing basement & misc. piping modifications	$50,000
13. Remove existing Aeration towers and associated piping	$50,000
14. Demo existing Chlorine Gas System	$50,000
15. Add new NaOCl liquid storage and feed system	$150,000
16. New 16-inch Filter inlet pipes & isolation valves	$300,000
17. New Filter Media, Underdrains, & and Air Scour Wash Modifications	$1,200,000
18. Filter Gallery Piping, Valves, FTW Improvements	$1,500,000
19. Equalization Basin Improvements (total of 3 new recycle pumps, and 2 new solids pumps, w/valves and piping modifications)	$350,000
20. Civil/Sitework	$500,000
21. Souris River Pump Station Modification to Decant Pump Station	$150,000
22. New MCC and site electrical for new IFCF and Clarifier Bldg.	$350,000
23. Sakakawea pretreated RW Quality Monitoring Systems (turbidity, total chlorine, pH, & temp.)	$80,000
24. Instrumentation and SCADA Improvements (New Chemical Feed PLC)	$200,000
25. New Filtered Water Turbidity Monitors (replace 12 yr old IFE & CFE turbidimeters with new units, 13 total)	$90,000
26. Electrical System Upgrades to existing MCCs, etc.	$500,000
Phase 2 Subtotal of Construction Cost Opinion (2005)*:	**$10,200,000**
Construction Contingency (10% of Subtotal CCO)	$1,020,000
Phase 2 Total Construction Cost Opinion (2005):**	**$11,220,000**

TABLE ES-2 (Continued)

PHASE 3 CONSTRUCTION COMPONENTS	2005 COST OPINION*
1. New 10 mgd Conventional Clarifier Mechanism	$800,000
2. New 5-min. Recarbonation Basin accessories for new Clarifier	$200,000
3. New CO_2 Sidestream Injection Systems for all 3 Clarifiers (including removal of existing CO2 diffusers and feeders)	$300,000
4. New Sodium Pyrophosphate feed to new Clarifier Effluent	$50,000
5. Modifications to existing Lime Feed system and addition of new recirculating lime slurry system, demo of existing trough systems	$350,000
6. New Mill & misc. Yard Piping (sludge lines, UW lines, etc.)	$100,000
7. Sludge Pumping and Piping Improvements	$70,000
8. Sludge Hauling Washdown Improvements	$100,000
9. Wellfield Improvements for Reliable Backup Supply	$300,000
10. Building HVAC System Improvements	$250,000
11. Add 1 new NAWS HS vertical turbine pump and misc. I&C to HSPS	$160,000
12. Civil/Sitework	$100,000
13. Electrical equip. for new Clarifier and Chemical Feed Equipment only	$200,000
14. Additional Administrative & Work Space for WTP	$250,000
15. Structural Improvements to Existing Buildings	$250,000
16. Instrumentation and SCADA Improvements	$150,000
Phase 3 Subtotal of Construction Cost Opinion (2005)*:	**$3,630,000**
Construction Contingency (10% of Subtotal CCO)	$370,000
Phase 3 Total Construction Cost Opinion (2005):**	**$4,000,000**

TOTAL CONSTRUCTION COST OPINION FOR PHASES 1, 2 & 3:	**$23,320,000**
Project Eng., CMS Service's, Client Admin. (18% of Total CCO)	$4,200,000
TOTAL PROJECT COST OPINION FOR PHASES 1, 2 & 3:	**$27,520,000**

*Cost Opinions does include Contractor's mob/demob. costs, administration costs, insurance, and bonding costs.
**Costs do not include project engineering, construction management services, nor Owner's administration costs.
All costs are in 2005 dollars and are not escalated to reflect costs at actual time of construction.

Cost Opinions presented have been prepared for guidance in project evaluation and implementation from the level of design and market information available at this time (August, 2005). The final project costs will depend upon actual labor and material costs, actual site conditions, actual competitive market conditions, and the final project schedule and scope of work. As a result, the final project costs will vary from the cost opinion presented above. As a result, funding needs must be carefully reviewed prior to making specific financial decisions and establishing final budgets.

estimate of the costs of final design engineering, construction management services (CMS), and the Owner administration costs.

The total estimated construction cost for all three phases of the recommended improvements is $23,180,000 in third-quarter, 2005 dollars.

ANNUAL MINOT WTP OPERATIONS COSTS

The major items in the plant's operations budget that are expected to be significantly affected by the switch to the Lake Sakakawea raw water supply are chemical use, sludge dewatering and disposal costs, and electricity. Table ES-3 provides a summary of these operations costs on the current groundwater supply and on the new surface water supply from Lake Sakakawea.

(Table ES-3 does not include cost of Operator manpower at the plant nor make predictions relative to the number of Operators required to run and maintain the new improved WTP as compared to the current WTP.) Table ES-2 shows that, for an average annual production level of 6.3 mgd, the total annual operations costs are expected to decline by almost 50 percent from a current level of about $1.16 million/yr to a new level of about $0.6 million/yr. This reduction in operations costs is significant and due to the following primary reasons:

- Significantly lower chemical doses of lime, carbon dioxide, chlorine, and ammonia will be required at the plant with treatment of the new raw water supply from Lake Sakakawea. (The lime and carbon dioxide dosages decrease due to the significantly lower hardness of the Sakakawea water supply. Chlorine and ammonia dosages are expected to fall significantly because of the requirements imposed on Lake Sakakawea water for disinfection / pretreatment of the water prior to reaching the watershed divide. Current plans are for the addition of chloramines at the Max Booster pump station to achieve 3-log Giardia inactivation and 4-log virus inactivation.
- Significantly lower sludge production and disposal costs due to the lower hardness, alkalinity and lower lime doses compared to local groundwater.
- Lower high-service pumping electrical costs due to expected gains in efficiency of the new vertical turbine high-service pumps.
- No raw water pumping from the groundwater wells will be required once the NAWS raw water supply is operational.
- Possibly enhanced filter performance with the new media, underdrains, backwash and air-scour wash improvements.

TABLE ES-3

MINOT WTP IMPROVEMENTS PROJECT
COMPARISON OF WTP OPERATIONS COSTS ON CURRENT GW SUPPLY VS. FUTURE SAKAKAWEA SUPPLY*
(For Avg Annual Flow of: 6.3 mgd)

Chemicals	Unit Costs (1)		Average Dose (mg/L)		Annual Cost ($/yr)	
			Current GW	Sakakawea	Current GW	Sakakawea
Primary Coagulant (Alum Blend)	$0.34	$/lb (2)	3.5	5.0	$22,800	$32,600
Floc Aid Polymer (Anion/Nonionic)	$1.85	$/lb (2)	0.07	0.10	$2,400	$3,500
Lime (as CaO)	$76	$/ton CaO	430	130	$313,300	$94,700
Tetra-Sodium Pyrophosphate ($1.25/lb at 69%)	$1.81	$/lb PO_4	1.5	1.5	$52,000	$52,000
Carbon Dioxide	$93	$/ton CO_2 (2)	50	35	$44,500	$31,200
Chlorine Gas	$621	$/ton Cl_2 (2)	10.3	0.0	$61,300	$0
Sodium Hypochlorite ($1.2/gal at 12.5%)	$1.20	$/lb Cl_2	0.0	1.5	$0	$34,500
Ammonium Sulfate ($0.28/lb at 24%)	$1.17	$/lb NH_3	2.5	0.5	$56,000	$11,200
Sodium Silicofluoride ($0.34/lb at 74%)	$0.46	$/lb F	1.9	1.0	$16,700	$8,800
				Subtotal:	**$569,000**	**$268,500**

(1) Bulk unit costs provided by js at plant - 8-05-05
(2) Pure bulk chemical, 100% purity

Sludge Handling & Disposal	Unit Costs		Dewatered Cake Prod. (tons/yr)		Annual Cost ($/yr)	
			Current GW	Sakakawea	Current GW	Sakakawea
P&F Press Dewatering Costs	$7.45	$/ton	19,100	4,800	$142,200	$35,700
Cake Hauling to Landfill	$3.65	$/ton	19,100	4,800	$69,700	$17,500
Landfill Tipping Fee (Unlined Cell)	$8.00	$/ton	19,100	0	$152,800	$0
Landfill Tipping Fee (Lined Cell)	$25.30	$/ton	0	4,800	$0	$121,400
				Subtotal:	**$364,700**	**$174,600**

Electricity & Misc.	Unit Costs		Avg. Energy Use (kwh/yr)		Annual Cost ($/yr)	
			Current GW	Sakakawea	Current GW	Sakakawea
Plant Misc. Elect (Est. 50 kw)	$0.05	$/kwh	438,000	438,000	$21,900	$21,900
Groundwater Pumping (Est. e=0.70 overall)	$0.05	$/kwh	1,192,300	0	$59,600	$0
Split Case FW Pumps (Est. e=0.65 overall)	$0.05	$/kwh	2,853,500	0	$142,600	$0
Vert. Turbine FW Pumps (Est. e=0.77 overall)	$0.05	$/kwh	0	2,408,800	$0	$120,400
UV Disinfection (LP reactors at 32 mJ/cm2)	$2,000	$/mgd/yr	-	-	$0	$12,600
(Includes maint. on reactors & replacement parts)				**Subtotal:**	**$224,100**	**$154,900**

SUBTOTAL ANNUAL OPERATIONS COSTS*:	**$1,157,800**	**$598,000**

* Does not include Operator's salary & OH Costs nor equipment maintenance costs

Section 1

SECTION 1

PROJECT BACKGROUND AND PROJECT OBJECTIVES

The objective of Specific Authorization No. 16 (SA-16) is to complete the preliminary design for the Minot Water Treatment Plant (Minot WTP) Improvements Projects that assures meeting the ultimate 26 mgd peak flow requirements of the Northwest Area Water Supply (NAWS) Project. This predesign effort also focuses on satisfying Federal and State of North Dakota regulatory water quality mandates for the NAWS water supply.

The Northwest Area Water Supply (NAWS) project was formulated to provide a reliable and high quality water supply to the City of Minot, the Minot Water Treatment Plant (WTP) service area, and other communities located adjacent to the NAWS raw water supply pipeline. The project will replace poor quality groundwater supply used by most communities in the project area with a higher quality water source from the Missouri River. The current plan is to divert water from Lake Sakakawea either by modifying one of the existing bays in the Bureau of Reclamation Snake Creek Pumping Plant, or by constructing a new intake and pump station in the vicinity of the Snake Creek Facility.

The Missouri River raw water would receive pretreatment and be transferred by pump stations and pipelines to the City of Minot WTP for final treatment. Potable water would then be distributed to the City of Minot, surrounding communities, the Minot Airforce Base, and the northern tier communities and rural water systems.

As a condition of the final NEPA document and to maintain operating conditions for the pipeline, the raw water will be treated with free chlorine followed by ammonia addition to create chloramines prior to crossing the drainage divide between the Missouri River and Hudson Bay water basins. The purpose of this pretreatment is to:

1. Reduce the transfer of potentially non-indigenous biological species between drainage basins by providing at least 3-log Giardia and 4-log virus inactivation
2. To reduce the growth of biological films within the walls of the pretreated water pipeline.

The objective of this predesign report is to develop design criteria and process recommendations for the Minot WTP to provide treatment of the Missouri River water supply for the NAWS system. The report is partly based on information finalized in the March, 2003 evaluation and facilities plan report that addressed the issues and opportunities for incorporating the Minot WTP into the NAWS project as the regional water treatment plant. That document titled Northwest Area Water Supply Project Minot WTP Evaluation and Facilities Plan (Specific Authorization No. 19) was developed to describe the existing facilities at the Minot WTP, and provide a regulatory, process, and situation audit of the current Minot WTP. That report provided a conceptual Facility Plan for the changes required to accommodate the NAWS flow and proposed new water source.

Since finalizing the SA No. 19 report, a number of plant process and equipment modifications have occurred. Also changes and amendments in the Safe Drinking Water Act (SDWA) regulations have occurred that will influence the process requirements for treating the new surface water supply.

The U.S. Environmental Protection Agency (USEPA) have made revisions to the drinking water standards and treatment requirements that are discussed in detail in this report. Proposed future rule-making was also taken into account in the development of proposed revisions to the plant. Since the initial plant equipment and facilities evaluation performed in 1997, some of the older equipment has been modified or replaced. Also, since the initial evaluation, Lake Sakakawea was selected as the best Missouri River water source for the NAWS project. This document provides a revision to the earlier studies to update the previous analyses with current information. In addition, it describes in detail the recommended improvements required to allow the Minot WTP to serve as the regional water treatment facility for the NAWS project.

This report presents a compilation of seven separate technical memorandum that were developed over the course of the project to describe the key recommendations for process modifications and additions. Pertinent information from these memoranda has been compiled into Sections 4 and 5 of this report. This information along with additional predesign efforts address the following issues for the Minot WTP and its integration into the NAWS project:

- The affect of the new NAWS Missouri River water supply on treatment and operation requirements of the Minot WTP.

- Recommended treatment modifications and improvements to the following Minot WTP processes:

  - Plant hydraulics
  - Influent flow control facilities (IFCF)
  - Chemical storage and chemical feed facilities
  - Water softening facilities
  - Water filtration facilities
  - Filter backwash water handling and equalization basin facilities
  - Finished water storage and high service pump station facilities
  - UV irradiation disinfection options
  - Solids processing, dewatering and disposal (truck hauling) facilities

- Recommended existing WTP system improvements that address:

  - Plant electrical system improvements
  - SCADA system and instrumentation improvements
  - Wellfield improvements for a reliable emergency source
  - Souris River pump station modifications
  - Additional Administrative and Operator work space modifications
  - Plant heating, ventilation and air conditioning improvements
  - Civil site and plant access improvements

- Prepared a phased project implementation schedule and an opinion of capital costs for each project phase.

- Prepared a comparison of estimated annual operations costs for the existing facilities using current ground water supplies relative to the proposed facilities using the Lake Sakakawea water supply. Major operations cost categories include:

  - Chemical usage
  - Sludge dewatering and disposal
  - Electricity usage

Each of these major elements are developed in detail in this report. Due to project budget limitations, the recommended improvements to the WTP are scheduled in series into three (3) separate construction projects. This phased construction plan addresses the timing of water supply needs ranging from maintaining current levels of service to future full implementation of the NAWS water supply requirements. Details of this phased construction plan are provided in the Executive Summary and in Section 5 of this report.

Finally, for some of the major processes and/or facilities (including softening clarifier alternatives and the volume of the new finished water reservoir), there are important final design decisions that need to be addressed by the Owners of the facilities and the project team. Our engineering recommendation for each of these decisions are clearly identified and discussed throughout Sections 4 and 5. The Executive Summary also provides an overview of these important decisions that need to be made prior to beginning final design work.

Section 2

SECTION 2

EXISTING AND ANTICIPATED FUTURE SAFE DRINKING WATER ACT REQUIREMENTS AND REGULATIONS

2.1 INTRODUCTION

The objective of this section of the evaluation is to ensure that the resulting capital improvement recommendations for the Minot WTP are both comprehensive and effective in meeting water quality and regulatory requirements This analysis was divided into two elements that provide the background and rationale for the initiation of the Minot WTP Predesign.

These include a review of the water quality in both Lake Sakakawea and Lake Audubon and an update of the regulatory audit. initially conducted and addressed as part of the SA No. 19 - WTP Evaluation and Facilities Plan Report completed in 1997. This section incorporates the revisions that have occurred at the Minot WTP since 1997. The updated findings provide background and the basis for recommending the NAWS improvements found in this document.

Four changes of special note that have occurred since the completion of the 1997 report that directly relate to audit process and the resulting recommended improvements. These changes include the following:

- Lake Sakakawea was selected as the source of the Missouri River supply verses Lake Audubon;
- Ozonation/chloramines was replaced by free chlorine/chloramines as the raw water pretreatment disinfection process at the Booster Pump Station site near the Town of Max;
- Ultraviolet (UV) irradiation process was added post filtration at Minot WTP; and
- The City's existing groundwater source will be maintained and improved to serve as the NAWS Project emergency source of supply.

The decision to use Lake Sakakawea as the source water will result in more stable water quality, less-challenging plant operations and lower operating costs. This raw water source has lower dissolved solids (TDS) including sodium, chloride, sulfate and hardness, lower total organic carbon (TOC) content, and somewhat lower treatment operating costs compared to water withdrawn from Lake Audubon.

The raw water pretreatment process currently planned to be incorporated at the Max Booster Pumping Station, will use a free chlorine dose of 4.5 mg/L followed by a minimum of 5 minutes of contact time prior to ammonia addition at approximately a 4.5:1 chlorine-to-ammonia ratio. This disinfection process will achieve at least 3 logs of *Giardia* inactivation and 4 logs of virus inactivation prior to the point where the pretreated water pipeline crosses the Hudson Bay/Missouri River divide, according to data presented in the Chloramine Challenge Study completed in 1995. This process will result in chloramine concentrations at the inlet to the

Minot WTP ranging from approximately 2.0 to 4.0 mg/L depending on flow and water quality conditions.

UV irradiation of water at the Minot WTP was added to the project as another microbial disinfection process. The physical location of the UV process is controlled by hydraulic constraints and space limitations at the Minot WTP.

Additionally, the Minot WTP has in the past treated water from the Souris River as well as from local groundwater supplies. In 1999, the Minot WTP stopped using the Souris River as a supplemental source due to quality and quantity concerns, and now uses groundwater exclusively. Therefore, the Minot WTP is currently classified as a groundwater treatment plant and compliance with any of the surface water treatment rules is not required. Chlorine dioxide is no longer used as a primary disinfectant at the Minot WTP. The current disinfection practice includes free chlorine addition at the inlet to the recarbonation basins followed by ammonia addition at the clearwell to form chloramines for maintenance of a distribution disinfection residual. With the proposed use of Lake Sakakawea as the new raw water supply for the Minot WTP, the Minot WTP and the water system will have to comply with all surface water treatment rule requirements. The City of Minot's existing groundwater supply system will be maintained as an emergency backup supply for the proposed new NAWS surface water supply.

The following discussion presents the findings of the regulatory audit process which reviewed the current (2004-2005) USEPA drinking water regulations and the resulting impact to the Minot WTP.

2.2 SOURCE WATER QUALITY CHARACTERIZATION

2.2.1 Raw Water Quality

Two primary Missouri River water diversion sites have been identified for obtaining the NAWS water supply. These include Lake Sakakawea and Lake Audubon. Historic water quality records of Lake Audubon will be used to characterize Lake Sakakawea water where actual information is not available. A complete water quality parameter scan was completed for Lake Audubon in 1966 as a part of the Water Quality Sampling Program Results report, completed in March 1999. A water quality sampling program was initiated under a cooperative agreement between the State Water Commission and the USGS in 1996 to characterize the water quality in Lake Sakakawea. This program is continuing as of the date of this report.

2.2.2 Lake Audubon Water Source

Lake Audubon water quality has been studied in detail since 1996 as a possible source of MR&I water for the Minot service area. The evaluation consisted of analysis of inorganics, organics, physical parameters, radiological parameters, algae and study concerns regarding disinfection by-products and biota transfer prevention (disinfection). Lake Audubon water quality characterization was conducted primarily to identify potential contaminants and constituents of concern for pretreatment and final water treatment process operation, for producing a high

quality MR&I water supply and to better understand the biota transfer pretreatment requirements.

Lake Audubon receives water from the Snake Creek Pumping Plant through an intake from an arm of Lake Sakakawea. The Snake Creek pump station has been in operation since 1978. The water quality of Lake Audubon is generally lower than that found in Lake Sakakawea.

The water quality concentration for constituents in Lake Audubon, above the minimum detection limit (MDL), are summarized in Table 2-1. Information for Lake Sakakawea is limited in comparison to Lake Audubon. The results did not indicate any major water quality issues or that any constituent varied appreciably from the previous limited sampling results. Recent monitoring by the USGS from 1998 to 2004 indicates that water quality in both Lake Sakakawea and Lake Audubon has remained relatively constant. Recent monitoring near the Snake Creek Pumping Plant intake forebay by the USGS indicates high readings of sulfates, TOC and other parameters from the lower depths of the water column. This is suspected to be caused by groundwater entering this area at colder temperatures and being held near the bottom of the lake by density stratification. Current averages of the USGS data is reported in Table 2-1 for the raw Lake Sakakawea column.

Water quality parameters in the Lake Audubon and in the Lake Sakakawea supply, that may have implications on treated water quality or on water treatment process selection, are discussed in the following section.

TABLE 2-1

LAKE AUDUBON AND LAKE SAKAKAWEA
RAW WATER SAMPLE RESULTS
(above MDL)

Contaminants	Units	October 1996 Sample Raw Lake Audubon	1996-2004 USGS Averages Raw Lake Sakakawea
Alkalinity	mg/l	205	167
Anion Sum	meq/l	9.78	--
Bromide	mg/l	0.095	--
Calcium	mg/l	45	51
Cation Sum	meq/l	10.2	--
Chloride	mg/l	15	9
Free CO2	mg/l	1.25	--
Carbonate	mg/l	6.42	--
Apparent Color	ACU	3	--
Specific Conductance	µmho/cm	865	654
Fluoride	mg/l	0.64	0.55

TABLE 2-1 (Continued)

LAKE AUDUBON AND LAKE SAKAKAWEA
RAW WATER SAMPLE RESULTS
(above MDL)

Contaminants	Units	October 1996 Sample Raw Lake Audubon	1996-2004 USGS Averages Raw Lake Sakakawea
Total Hardness	mg/l as $CaCO_3$	264	210
Bicarbonate	mg/l	248	--
Potassium	mg/l	6.1	3.9
Langlier Index	None	1.2	--
Surfactants	mg/l	0.15	--
Magnesium	mg/l	37	21
Manganese	µg/l	5.6	1.6
Sodium	mg/l	110	59
Odor	TON	2	--
Hydroxide	mg/l	0.068	--
Lab pH	units	8.6	8.3
pH of CaCO3 Saturation (25°C)	units	7.4	--
pH of CaCO3 Saturation (60°C)	units	7.0	--
Sulfate	mg/l	255	165
Total Dissolved Solids	mg/l	530	430
Total Organic Carbon	mg/l	5.9	4.2
Turbidity	NTU	2.0	9.2
Semivolatiles			
Di-n-Butylphthalate	µg/l	0.6	
Gross Alpha and Beta Radiation			
Alpha, Gross	pCi/l	2.5	
Alpha, Two Sigma Error	pCi/l	2.3	
Alpha, Min Detectable Activity	pCi/l	2.5	
Beta, Gross	pCi/l	2.8	
Beta, Two Sigma Error	pCi/l	1.8	
Beta, Min Detectable Activity	pCi/l	2.1	
Herbicides			
2,4-D	µg/l	0.10	
Inorganics			
Arsenic	µg/l	3.0	
Barium	µg/l	80	

TABLE 2-1 (Continued)

LAKE AUDUBON AND LAKE SAKAKAWEA
RAW WATER SAMPLE RESULTS
(above MDL)

Contaminants	Units	October 1996 Sample Raw Lake Audubon	1996-2004 USGS Averages Raw Lake Sakakawea
Cadmium	µg/l	0.64	
Copper	µg/l	6.8	
Iron	µg/l	67	
Lead	µg/l	6.9	
Zinc	µg/l	15	
Trihalomethanes (12-hr chloramine formation test)			
Bromoform	µg/l	2.2	
Chloroform	µg/l	142	
Dibromochloromethane	µg/l	23.0	
Bromodichloromethane	µg/l	48.6	
Total Trihalomethanes	µg/l	216	
Haloacetic (12-hr chloramine formation test)			
Bromochloroacetic acid	µg/l	19	
Bromodichloroacetic acid	µg/l	10	
Chlorodibromomacetic acid	µg/l	3	
Dibromoacetic acid	µg/l	5	
Dichloroacetic acid	µg/l	42	
Monobromoacetic acid	µg/l	2	
Tribromoacetic acid	µg/l	2	
Trichloroacetic acid	µg/l	20	
D/DBP Haloacetic Acids	µg/l	69	
Volatile Organic Compounds			
m+p-Xylenes	µg/l	0.5	

As shown in Table 2-2, Lake Audubon exceeds current Federal SDWA standards (primary and/or secondary) for four of the constituents that were evaluated. For Lake Sakakawea, the only areas of concern are the formation potentials for trihalomethanes and haloacetic acids.

Total potential trihalomethane formation will require control of the disinfection process to hold the formation below the anticipated Stage I maximum contaminant level (MCL) of 80µg/l. Future regulations under the Stage II D/DBP (Phase 2) Rule will possibly establish the MCL at

40 or 60 µg/l. The proposed Stage I DBP Rule also changes the sampling locations to those within the distribution system.

Total potential haloacetic acids formation is projected to be near the Stage 1 MCL of 60 µg/l. Control of the disinfection process will be required to maintain levels below regulatory limits.

TABLE 2-2

LAKE AUDUBON
CONTAMINANTS ABOVE REGULATORY LEVELS

Contaminant	Units	Federal Drinking Water MCL[1]	Secondary Standard	Raw Lake Audubon
Total Potential Trihalomethanes	µg/l	80[2]	-	216[3]
Total Potential Haloacetic Acids	µg/l	60[2]	-	69[3]
Sulfate	mg/l	500	250	255
Total Dissolved Solids	mg/l	-	500	530

Notes:
1. MCL = maximum contaminant level
2. Stage 1 MCL.
3. Concentrations are total "potential" values determined by bench analysis utilizing chloramine disinfection over a 12 hr contact time.

Sulfate levels in Lake Sakakawea average 165 mg/l over the periods 1997 through 2004. Sulfate levels are below the MCLs for both the primary and secondary regulatory limits of 500 and 250 mg/l, respectively. However, in the historical data, there are several (~5) sample spikes that were collected from the bottom of the lake that exceed the secondary limits. These samples are assumed to be influenced by cold groundwater inflow being held near the bottom of the lake by density stratification.

Total dissolved solids (TDS) in Lake Sakakawea average 430 mg/l which is below the secondary standard limit of 500 mg/l. Spikes in TDS samples were seen in the record of data corresponding to the sample dates and depths that sulfate spikes were recorded.

2.3 SUMMARY OF 1997 REGULATORY AUDIT

The SA No. 19 report section entitled “REGULATORY AUDIT” reviewed and evaluated the impact of then current and proposed future drinking water regulations on the integration and treatment of Missouri River water at the Minot WTP. The following regulations were reviewed in the 1997 report:

- National Primary Drinking Water Regulations (NPDWR, 1975)
- Secondary drinking water regulations (EPA, 1979, 1991)
- Trihalomethane regulation (EPA, 1979);
- Phase I VOCs regulations adopted in July 1987.
- Surface Water Treatment Rule (SWTR) final June 29, 1989.
- Revised Total Coliform Rule (TCR), final June 29, 1989
- Phase II SOCs and IOCs regulations which were final January 30, 1991
- Lead and Copper Rule which was final June 7, 1991;
- Phase V SOCs and IOCs regulations which were final on July 17, 1992;
- Information Collection Rule effective June 18, 1996;
- Disinfectants/Disinfection By-Products Rule (D/DBP) - Proposed
- Interim Enhanced Surface Water Treatment Rule (IESWTR) - Proposed
- Enhanced Surface Water Treatment Rule (ESWTR) - Proposed
- Radionuclides - Proposed
- Arsenic - Proposed
- Sulfate - Proposed
- Phase VIB - Proposed
- Chemical Monitoring Reform – Proposed

Based on the review of regulations in 1997, the potential impacts to the Minot WTP were summarized as presented in Table 2-3. Based on the 1997 Regulatory Audit, the major issues requiring resolution for the Minot WTP upgrade and expansion at that time included:

- Selection of raw water source (either Lake Sakakawea or Lake Audubon) to allow further treatment process definition and to focus on additional raw water quality monitoring;
- Measurement of *Cryptosporidium* concentrations in the raw water to determine possible need for enhanced disinfection, either at the Pretreatment Facility or at the Minot WTP;
- Measurement of Total Organic Carbon (TOC) concentrations in the raw water to determine if enhanced coagulation/softening is required to provide 15 to 25% TOC removal in the Minot WTP;
- Measurement of arsenic concentrations in the raw water, which may require removal if the Arsenic Rule requires a finished water concentration < 2 ppb and not the 10 ppd currently anticipated; and
- Potential compliance problems with the Coliform Rule and Lead and Copper Rule (for the City of Minot and other NAWS contract users) during transition from

existing groundwater supplies to the new surface water supply, due to changes in water quality and water chemistry.

These issues require review and updating, based on the current drinking water regulations and also due to changes and decisions made since the 1997 report was completed. A discussion to the potential issues which were updated for this report is presented in the next section.

TABLE 2-3

SUMMARY OF ANTICIPATED REGULATORY IMPACTS OF THE MISSOURI RIVER SUPPLY FOR TREATMENT AT THE MINOT WTP

Regulations	Impact of Missouri River Supply
Existing Regulations:	
NPDWR	No Impact.
Secondary Standards	Sulfate and TDS levels may occasionally exceed secondary MCLs, but significantly less frequently than with current supply.
THM Regulation	No Impact.
Phase I, II & V Rules	No Impact.
SWTR	Primary disinfection provided at Pretreatment Facility; no CT credit required at plant.
Total Coliform Rule	Potential problems during transition to new supply.
Lead and Copper Rule	Potential problems during transition to new supply.
Information Collection Rule	Not Applicable to NAWS contract users.
Future Regulations:	
D/DBP Rule	The plant may be required to achieve 15 to 25 percent TOC removal with "enhanced coagulation/softening" which may necessitate the need for metal coagulant addition.
IESWTR	No Impact.
ESWTR	Possible impact under the most stringent disinfection regulatory scenarios (> 1 log *Crypto* inactivation). In this case, alternative treatment technology (UV irradiation or ozone) may be required at the Minot WTP. The potential exists to apply UV irradiation at the pretreatment facility.
Radionuclides	No impact.
Arsenic	No impact. May be problematic if future MCL established below 2 µg/L.
Sulfate	No impact at expected MCL of 500 mg/L. Lake Sakakawea should have lower sulfate concentrations than current supplies.

2.4 2004-2005 REGULATORY AUDIT

This update specifically addresses new and pending EPA regulations that have changed since completion of the SA No. 19 report in 1997, and include the following:

- Interim Enhanced Surface Water Treatment Rule
- Long-Term 2 Enhanced Surface Water Treatment Rule
- Stage 2 Disinfectants/Disinfection Byproducts Rule
- Filter Backwash Recycling Rule
- Arsenic Rule
- Radionuclide Contaminants
- Federally Monitored Unregulated Contaminants

Each of these regulations is discussed in the following paragraphs as they relate to the Lake Sakakawea raw water supply followed by the implications for the Minot WTP.

2.4.1 Interim Enhanced Surface Water Treatment Rule (IESWTR)

The IESWTR was promulgated in 2001 as a precursor to the Long-Term Enhanced Surface Water Treatment Rule, which is discussed in the next section but has not yet been officially promulgated. The requirements of the IESWTR will remain in effect once the Long-Term ESWTR is enacted.

All public water systems using surface water sources are required to comply treatment performance and disinfection requirements. The State of North Dakota Department of Health (State DOH) does not require anything more stringent than required by Federal drinking water requirements. Four specific areas are addressed within the IESWTR including:

- Overall filtration performance,
- Individual filtration performance,
- Disinfection performance, and
- Disinfection profiling and benchmarking.

These are discussed in detail below.

Overall Filtration Performance. Filtration performance standards require that the turbidity measurements from the combined filter effluent must be measured in four-hour intervals by grab sampling or continuous monitoring. Ninety-five percent of these turbidity readings must be less than or equal to 0.3 NTU, and may never exceed 1.0 NTU. In addition, treatment strategies, in combination with disinfection, must consistently remove/inactivate 99.9 percent (3-log) of *Giardia*, 99.99 percent (4-log) of viruses and 99 percent (2-log) removal of *Cryptosporidium*. Each utility is required to submit a report to the State on a monthly basis and identify any exceptions (violations).

Individual Filter Performance. Continuous, on-line measurement of turbidity for each individual filter is required. This data must be recorded every fifteen minutes. If there is a failure in the turbidity monitoring equipment, the system may conduct grab sampling every 4 hours, but for not more than five working days following the failure. Each utility is required to submit a report to the State on a monthly basis and identify any exceptions. Exceptions (violations) occur when:

1. Individual filter effluent turbidity exceeds 1.0 NTU in two consecutive measurements, 15 minutes apart at any time during the filter operation.
2. Individual filter effluent turbidity exceeds 0.5 NTU in two consecutive measurements, 15 minutes apart, after 4 hours of operation following backwash.
3. If the individual filter effluent turbidity exceeds 1.0 NTU in two consecutive measurements, 15 minutes apart, at any time during the filter operation for three consecutive months.
4. If the individual filter effluent turbidity exceeds 2.0 NTU in two consecutive measurements, 15 minutes apart, at any time during the filter operation for two consecutive months.

The purpose of establishing these individual filter performance criteria is to ensure that an individual filter that could be performing poorly is not being masked by being blended with the effluent of other individual filters. The criteria were set up such that there are "triggers" in the period right after backwashing as well as any time the filter is in operation. Other "triggers" are set to ensure that some abnormal event does not create a compliance violation, but that consistently poor filter performance is recognized and addressed.

Disinfection Performance. The IESWTR requires all utilities served by a surface water supply to achieve a minimum of 99.9 percent (3-log) reduction in *Giardia lamblia* cysts, 99.99 percent (4-log) reduction in viruses and 99 percent (2-log) removal of *Cryptosporidium* cysts during drinking water treatment. Removal credit is awarded to plants based on the types of processes provided by the plants. For softening plants such as the Minot WTP, a 2.5-log, 2.0-log and 2.0-log removal credit is usually achieved for *Giardia lamblia*, viruses and *Cryptosporidium*, respectively. The remaining reduction in pathogenic organisms must come in the form of disinfection and/or inactivation. For the Minot WTP, an additional minimum of 0.5-log inactivation of *Giardia* and 2.0-log inactivation of viruses is required; *Giardia* inactivation typically governs disinfection through the WTP.

In order to determine the level of inactivation achieved during chemical disinfection, the EPA developed the "CT" concept. "CT" is the product of disinfectant residual measured at the outlet of a disinfection section and the time in which 10 percent (by volume) of an added tracer passes through the section, known as the T_{10}. To remain in compliance with disinfection performance standards, the following criteria must be met:

1. Disinfection residual must be continuously recorded at the entry point to the distribution system, and must never fall below 0.2 mg/L.

2. CT must be calculated every day. To ensure that the values are conservative, the highest flow rate and minimum clearwell volume recorded for the day must be used in the calculation; tracer studies should be used to verify hydraulic efficiencies through the various treatment trains.
3. CT must be sufficient to meet the needed removal/inactivation levels.
4. The residual disinfectant concentration in the distribution system cannot be undetectable in more than 5 percent of the samples. For simplicity, samples should be collected at coliform bacteria monitoring points.

Disinfection Profiling and Benchmarking. The purpose of disinfection profiling and benchmarking is to develop a process to assure that there is no significant reduction in microbial protection as a result of major disinfection process modifications. Disinfection process modification may be driven by the need to meet the new MCLs for total trihalomethane (TTHMs) and five haloacetic acids (HAA_5) from the recently adopted Disinfectants/Disinfection By-products Rule. Surface water systems serving 10,000 people or more were required to develop four quarters of TTHM and HAA_5 data by April 2001. If the observed TTHM or HAA_5 exceed 80-percent of the new MCLs (≥64 µg/l and/or ≥48 µg/l for TTHM and HAA_5, respectively), a disinfection profile will need to be developed. The impact of this for the Minot WTP is presented and discussed in the Disinfectant/Disinfection By-product portion of this regulatory review.

IESWTR Implications for the Minot WTP. The regulations permit and the State DOH indicated that disinfection credit would be given for the pretreatment process to meet the Bin 1 requirements discussed with LT2ESWTR. The Minot WTP will have to meet the requirements of the IESWTR once Lake Sakakawea water is introduced into the plant. The plant will have to begin submitting monthly reports to the State DOH which demonstrate compliance with the filtration and disinfection requirements.

Disinfection profiling/benchmarking will also need to be completed in consultation with the State. It is not likely that compliance with the DBP Rule will be an issue due to the use of chloramines, but further testing is required.

The individual filter performance requirements of the IESWTR imply that filter-to-waste (FTW) should be implemented to protect against possible violations of turbidity standards (especially after backwashing a filter), but the regulations do not specifically require every surface water plant to have FTW.

2.4.2 Long-Term 2 Enhanced Surface Water Treatment Rule (LT2ESWTR)

The purpose of the Enhanced Surface Water Treatment Rule (ESWTR) is to further improve the control of microbial pathogens in drinking water, especially *Cryptosporidium*. The ESWTR was split into two phases: Long-Term 1 and Long-Term 2. The final Long-Term 1 ESWTR was published in November 2000. The Long-Term 1 ESWTR only applies to public water systems serving less than 10,000 people and therefore does not effect the Minot WTP. The Long-Term 2 ESWTR was proposed in 2001, but has yet to be finalized. It is currently anticipated that it will be finalized and promulgated in late 2005 after EPA responds to numerous public comments.

The requirements of the IESWTR will also remain in effect when the LT2ESWTR is promulgated.

Many revisions to the LT2ESWTR have been made since the first publication. The most recent requirements that apply to the Lake Sakakawea supply and to the Minot WTP include:

- Increase filtration and disinfection performance criteria for all systems; disinfection criteria based on system (i.e. raw water) vulnerability to microbial contaminants. Incorporate raw water *Cryptosporidium* into sampling regimen.
- Potential *Cryptosporidium* inactivation requirements.
- Incorporation of a multi-barrier disinfection strategy.

To quantify system vulnerability, a 24-month intensive monitoring program for *Cryptosporidium* will be required to help classify plants into different source water concentration ranges (or "bins"); monitoring will need to begin as soon as the rule is promulgated. The State Water Commission initiated the *Cryptosporidium* monitoring but, due to technical difficulties, it was discontinued. Initial results were negative. Table 2-4 presents the proposed additional treatment requirements for conventional filtration plants based on results from the monitoring program.

TABLE 2-4

LT2ESWTR TREATMENT REQUIREMENTS FOR CONVENTIONAL PLANTS

Bin Number	Cryptosporidium Results (# oocyst/L Raw Water)	Treatment Requirements
Bin #1	< 0.075	No Additional Treatment Required
Bin #2	0.075 – <1.0	1-log Reduction
Bin #3	1.0 – 3.0	2-log reduction (1-log from disinfection)
Bin #4	> 3.0	2.5-log reduction (1-log from disinfection)

Non-disinfection related reduction can be achieved through one or more alternatives presented in the LT2ESWTR "Toolbox", are provided below:

- Watershed control - 0.5 log.
- Alternative source/intake management - can get lower bin assignment.
- Off-stream storage - 0.5 log or 1.0 log based on hydraulic residence time.
- Pre-sedimentation basin (w/ coagulation) - 0.5 log
- Lime softening - 0.5 log
- Lower finished water turbidity - 0.5 log for combined filter effluent of 0.15 NTU 95% of the time, or 1.0 log for individual filter effluent less than/equal to 0.10 NTU 95% of the time.

- Membranes - Challenge tests (particle counts) to demonstrate higher pathogen removal

Surface water systems serving >10,000 people will need to conduct 24-months of continuous monitoring plus one additional month, to determine the source water concentration of *Cryptosporidium* for a given system. In addition, the rule requires that two samples be submitted during the first round of sampling: a field sample and a matrix "spike". The matrix spike is a one-time sample used to quantify the methods detection level for a particular water quality. The effectiveness of the method will vary according to raw water quality such as alkalinity, pH, and turbidity. This sample is "spiked" with a known concentration of *Giardia*/C*ryptosporidium*, and the recovery levels measured (the assumption is that the "background" levels of *Giardia*/C*ryptosporidium* are the same between the field and matrix "spike").

In addition to raw water monitoring requirements, the LT2ESWTR requires all systems to perform disinfection profiling. Disinfection profiling will be required for public water systems that measured TTHM or HAA5 levels in excess of 80-percent of the new MCLs (≥0.064 mg/L and/or ≥0.048 mg/L for TTHM and HAA_5, respectively), during preliminary testing as part of the Interim ESWTR.

Implications for the Minot WTP. In order to determine the "bin classification" for Lake Sakakawea, continuous 24 months of monitoring for *Giardia/Cryptosporidium* will be required using the approved protocol. This has been verified with the State DOH. This sampling should begin as soon as feasible and should be coordinated with other water quality sampling recommended herein.

The results of the source monitoring will have a direct impact on the treatment process and operating requirements for the Minot WTP. If the sampling indicates high enough *Cryptosporidium* concentrations to be classified in either Bin 3 or Bin 4, then disinfection of *Cryptosporidium* will be required in addition to operational enhancements at the Minot WTP. Since the addition of UV disinfection is currently planned at the Minot WTP, the UV system would be designed to provide this level of disinfection.

As also discussed under the IESWTR requirements, disinfection profiling/benchmarking will also need to be completed in consultation with the State, once Lake Sakakawea water is introduced into the plant. It is not likely that compliance with the DBP Rule will be an issue due to the use of chloramines, but further testing is required.

2.4.3 Stage 2 Disinfectants/Disinfection By-Products Rule

The Stage 2 Disinfectants/Disinfection By-Products (D/DBP) Rule was published in 2003 by the EPA in the Federal Register. Full promulgation is anticipated in late 2004 after EPA responds to numerous public comments. The purpose of the Rule is to further reduce the health risks associated with DBPs. The Rule establishes new and more stringent requirements for sampling and reporting DBPs within municipal drinking water distribution systems, although actual Maximum Contaminant Levels (MCLs) for both total trihalomethanes (TTHMs) and the five haloacetic acids (HAA_5) have not changed from the original Stage 1 D/DBP Rule. Over the next

7 to 10 years, public water systems around the U.S. must conduct detailed evaluations and potentially alter existing treatment and/or disinfection processes to remain in compliance with drinking water regulations.

The proposed Stage 2 DBP Rule will require changes in the sampling locations and compliance calculations to better reflect the maximum DBP concentrations that occur within a distribution system. Instead of using a system-wide running annual average (RAA) calculation method as currently required, the Stage 2 Rule will require calculating locational running annual averages (LRAA) representative of "worst-case" locations within the distribution system.

The implementation of this rule will be in two phases. Phase 1 will require sampling at new locations as required per the Initial Distribution System Evaluation (IDSE) methodology, but will increase the THM and HAA limits to 120 µg/l and 80 µg/l MCLs, respectively. Phase 2 will reduce the THM and HAA back to the current 80 µg/l and 60 µg/l MCLs, respectively, using the new IDSE sample locations. Compliance with Phase 2 is expected to be required within the next 8 to 10 years.

The bromate MCL is recommended to remain at 0.010 mg/L. The current maximum disinfectant residual concentrations leaving a plant will also likely remain at current levels (for example, the maximum chloramine concentration is 4.0 mg/L).

Implications for the Minot WTP. Based upon the previous bench-scale studies, the proposed pre-treatment process using a very short free chlorine contact time (5 minutes) followed by ammonia addition to form chloramines should result in low concentrations of THMs and DBPs, especially if the chloramine residual remains through the Minot WTP and into the distribution systems of Minot and the northern-tier communities with little additional chlorine addition. The lime softening process at the Minot WTP will also be capable of removing some TOC and DBP precursors to ensure compliance with the current DBP Rule.

However, the distance that the water has to travel, with the concurrent required chlorine addition, longer contact times, causes some concern that the Stage 2 D/DBP Rule can be met in all locations, especially at the end of the northern transmission pipeline. The water age and chlorine contact time could approach 15 to 20 days. This will require additional evaluation.

It is recommended that bench-scale DBP formation testing be conducted to mimic the proposed pre-treatment process and the long contact times to accurately predict THM and HAA concentrations prior to implementing the proposed plant improvements. If possible, the softening process should also be tested using bench-scale techniques to properly assess the impact of the Minot WTP on ultimate DBP concentrations.

Once the Stage 2 D/DBP Rule is promulgated and once the Lake Sakakawea supply is introduced into the plant, the ISDE sampling requirements will have to be developed in consultation with the State DOH.

2.4.4 Filter Backwash Recycling Rule (FBRR)

The FBRR is intended to improve public health protection by assessing and changing, where needed, recycling practices for improved contaminant control, particularly microbial contaminants. The Rule was last revised in June 2001 and the final Rule began taking effect in December 2003. The Rule applies to all conventional and direct filtration plants which treat surface water or groundwater under the influence of surface water, that recycle filter backwash water, thickener supernatant, or liquids from dewatering processes. Since the existing Minot WTP treats groundwater, it does not have to comply with this rule now, but it will when Lake Sakakawea water is introduced into the plant.

In December 2002, EPA released a Technical Guidance Manual to support implementation of the Filter Backwash Rule. The EPA rule contains no requirement to treat recycle water. Decisions requiring treatment or approval of an alternate recycle location are left to the State primacy agency.

The critical deadlines and requirements for compliance with the FBRR included the following:

- **December 8, 2003**. Submit recycle notification to the State. Notification includes: a plant schematic showing the origins of recycled flows, how these flows are conveyed, and the return location of recycled flows. Historical recycle flow data including average recycle flows, previous year's peak recycle flow and design flow (State-approved operating capacity) for the plant will also be required.
- **June 8, 2004**. Return recycle flows through all of the processes of a system's existing conventional or direct filtration system or an alternate recycle location approved by the State.
- **June 8, 2006**. Complete capital improvements associated with relocating the recycle return location, if necessary.

Implications for the Minot WTP. The Minot WTP currently recycles flows from many processes to the head of the plant and planned improvements will retain similar recycle features. It is not anticipated that this Rule will alter operations at the Minot WTP or cause changes to be made to the recycle processes for the NAWS upgrade and expansion. All recycle flows are returned to the head of the plant prior to coagulant addition and softening and this will likely be approved by the State DOH without requiring changes. It is recommended that the plant keep accurate flow records on file for future use including: daily list of all recycle flows and frequency with which they are returned, average and maximum backwash flowrates and durations, as well as filter run length data. In addition, several operational parameters should be tracked including: typical and maximum hydraulic loading rates through the sludge thickener and through the sludge dewatering system, the types of treatment chemicals used (average dose, frequency of use) and the frequency that solids are removed from the plant process train.

If filter-to-waste (FTW) is incorporated at the Minot WTP, then the return location of FTW water needs to be determined; options include to the head of the plant or to the filter influent channel. FTW water is relatively clean, since it has been filtered, compared to spent backwash water or other recycle streams. Hence, it may not be necessary to return FTW water to the head

of the plant, if there are other less-costly or more feasible options available. Further discussion with the State DOH is required if FTW is implemented at the Minot WTP.

2.4.5 Arsenic Rule

The Arsenic Rule was federally issued in June 2000 with the final regulation issued January 2001. The new Federal Arsenic Rule reduced the MCL for arsenic from 0.050 mg/L to 0.010 mg/L. The proposed 0.002 mg/L standard was not implemented at this time. Compliance with the new MCL is required by January 2006.

Implications for the Minot WTP. The Arsenic Rule should not cause any compliance concerns or treatment process modifications. The expected arsenic concentrations in Lake Sakakawea are less than 0.005 mg/L and the softening process is capable of removing arsenic to less than 0.010 mg/L if elevated levels are found. The Lake should be routinely monitored for arsenic to verify that low concentrations exist.

The existing Minot groundwater supply, part of which is planned for use as an emergency backup supply for the NAWS project, does not have significant concentrations of arsenic according to City staff.

2.4.6 Radiologic Contaminants

The original MCLs from the National Primary Drinking Water Regulations (NPDWR) are still in effect today. These rules were revised in October 2002 to include new MCLs for Uranium, Tritium and Strontium, and to clarify and modify monitoring requirements. Together, these established MCLs seek to minimize the cancer risk associated with long-term exposure to six natural and man-made radiologic contaminants.

Monitoring requirements and MCLs for Radiologic Contaminants are contained in Table 2-5. Monitoring for radionuclides is required once every four years from surface water sources. If gross alpha is measured below 5 picocuries per liter (pCi/L), no radium analyses are required. Additionally, only systems with elevated risks (i.e. impacts by man-made radiation sources) must sample for beta/photon radiation.

TABLE 2-5

RADIOLOGIC CONTAMINANTS AND MAXIMUM CONTAMINANT LEVELS

Contaminant	MCL	Sampling Frequency
Gross Alpha	15 pCi/L	4 years
Beta particle/photon activity	4 mrem/yr	4 years
Iodine-131	3 pCi/L	4 years
Radium-226 + 228[1]	5 pCi/L[1]	4 years
Strontium 90	8 pCi/L	4 years
Tritium	20,000 pCi/L	4 years
Uranium	30 ugh/L	

1. Not necessary if gross alpha less than 5 pCi/L.

Implications for Minot WTP. Previous samples taken from Lake Audubon indicated that gross alpha is consistently less than 5 pCi/L. The regulations concerning radiologic contaminants should not cause any compliance concerns or treatment process modifications. Also, the softening process is capable of removing some radiologic compounds if elevated levels are experienced.

Lake Sakakawea should be routinely monitored for gross alpha and uranium to verify that low concentrations exist, especially considering the new regulations for Uranium, Strontium and Tritium (we have assumed Lake Sakakawea concentrations would also be less than 5 pCi/L based on Lake Audubon sample levels, this needs to be confirmed).

2.4.7 Federally Monitored Unregulated Contaminants

The Final Unregulated Contaminant Monitoring Rule was published by the EPA in the March 12, 2002, *Federal Register*. The 1996 Amendments to the SDWA required EPA to promulgate revisions to the existing monitoring requirements for unregulated contaminants every 5 years. This Rule will be enforced by the EPA.

The Unregulated Contaminant Monitoring Rule includes a new list of contaminants to be monitored, procedures for selecting a national representative sample of public water systems and procedures for incorporating the monitoring results into the National Contaminant Occurrence Database. The contaminants for monitoring are divided into three lists; see Table 2-6. List 1 contaminants are to be monitored by all public water systems serving over 10,000 people and a smaller group of public water systems serving less than 10,000 people. List 2 contaminants are to be monitored by a representative group of 300 randomly chosen public water systems. List 3 is to be monitored at 200 “vulnerable” systems across the country.

TABLE 2-6

UNREGULATED CONTAMINANT MONITORING RULE MONITORING LIST

LIST 1 Assessment Monitoring of Contaminants with Available Methods	LIST 2 Screening Survey of Contaminants Projected to have Methods by Date of Program Implementation	LIST 3 Pre-Screen Testing of Contaminants Needing Research on Methods
(1) 2,4-dinitrotoluene	(13) Diuron	(29) Algae and toxins
(2) 2,6-dinitrotoluene	(14) Linuron	(30) Echoviruses
(3) DCPA mono acid	(15) Prometon	(31) Coxsackieviruses
(4) DCPA di acid	(16) 2,4,6-trichlorophenol	(32) Helicobacter pylori
(5) 4,4'-DDE	(17) 2,4-dichlorophenol	(33) Microsporidia
(6) EPTC	(18) 2,4-dinitrophenol	(34) Caliciviruses
(7) Molinate	(19) 2-methyl-1-phenol	(35) Adenoviruses
(8) MTBE	(20) Alachlor ESA	(36) Lead-210
(9) Nitrobenzene	(21) 1,2-diphenylhydrazine	(37) Polonium-210
(10) Terbacil	(22) Diazinon	
(11) Acetochlor	(23) Disulfoton	
(12) Perchlorate	(24) Fonofos	
	(25) Terbufos	
	(26) Aeromonas Hydrophila	
	(27) Polonium	
	(28) RDX	

For chemical contaminants, surface water systems shall monitor quarterly for one year and ground water systems shall monitor two times six months apart. For microbiological contaminants, systems shall monitor twice, six months apart. For all chemical constituents in Lists 1 and 2, monitoring shall be conducted at the entry point to the distribution system. For microbiological contaminants in List 1, monitoring would be conducted near the end of the distribution system and at a representative site within the distribution system. Sampling was to be conducted over a year long period from 2001 to 2003. The Rule will be revised again in late 2004 according to the current timetable.

Implications for Minot WTP. Further discussions will have to be held with EPA and the State DOH whether any List 2 and List 3 contaminants need to be monitored, once Lake Sakakawea water is introduced into the plant. It may be appropriate to begin sampling for List 2/List 3 contaminants now, based on feedback from EPA and the State DOH.

2.5 SUMMARY OF CURRENT REGULATORY IMPACTS

The potential impacts of current drinking water regulations with respect to the proposed Minot WTP are listed below:

- Identify concentrations of *Cryptosporidium* in Lake Sakakawea water to determine Bin classification per the LT2ESWTR and to establish disinfection and removal criteria for the Minot WTP and the pretreatment process;

- Identify TOC concentrations in Lake Sakakawea water to determine if TOC removal is required via enhanced coagulation/softening at the Minot WTP;
- Determine DBP formation potential via the proposed pretreatment and Minot WTP processes, over very long contact times, to better understand compliance with the upcoming Stage 2 D/DBP Rule;
- Plan to add filter-to-waste at the Minot WTP to ensure compliance with the IESWTR for individual filter turbidity performance. Continue discussions and resolve FTW return point issue with the State DOH; and
- Determine whether the pretreatment disinfection process or the disinfection process(es) at the Minot WTP will be used to verify disinfection compliance with the IESWTR (this requires determination of *Cryptosporidium* concentrations in Lake Sakakawea before resolution).

Based on these issues, the following action items are recommended for implementation:

1. Conduct additional water quality sampling at Lake Sakakawea, preferably at the Snake Creek Pumping Plant when it operates:

    - *Cryptosporidium/Giardia* – monthly for at least 24 months per current approved methodology
    - Total Organic Carbon (TOC) – monthly for at least 12 months
    - General Minerals and Turbidity – monthly for at least 12 months
    - Arsenic – quarterly for at least 12 months
    - Radionuclides – at least annually, but verify frequency and analyses in consultation with the State DOH and/or EPA
    - Unregulated Contaminants – determine which contaminants and frequency in consultation with the State DOH and/or EPA

2. Conduct bench-scale disinfection and DBP formation tests with Lake Sakakawea water to simulate the proposed pretreatment and softening processes with contact times that simulate distribution of the water to the northern tier communities of NAWS project participants:

    - THM and HAA formation
    - Chloramine speciation and residual decay
    - Potential reduction of chloramine residual and ammonia in the softening, recarbonation and filtration processes
    - Specific DBP analyses

    At least two sets of tests should be conducted to simulate cold water and warm water conditions.

Section 3

SECTION 3

PROCESS AUDIT AND INTEGRATION OF THE EXISTING MINOT WTP WITH THE NEW NAWS WATER SUPPLY

3.1 INTRODUCTION

In 1997, a Process Audit (SA No. 19) was prepared which evaluated the process capabilities and hydraulic capacity of the major unit processes and treatment support systems in place at the Minot WTP to determine the possible operational impact(s) and potential issues and limitations for treating Lake Sakakawea surface water. Since this 1997 audit, a number of key decisions regarding process and equipment changes and modifications have been made and are summarized in the March, 2005 report titled "Minot Water Treatment Plant Predesign Audit Report Specific Authorization No. 16". Brief summaries of the findings from both of these reports are provided in this section.

3.2 SUMMARY OF 1997 PROCESS AUDIT

Chapter 4 of the SA No. 19 report entitled "PROCESS AUDIT" reviewed and evaluated the impact of delivering pretreated Missouri River water (Lake Audubon or Lake Sakakawea) to the Minot WTP. The Audit identified the major impacts of converting from groundwater to treatment of Missouri River water. In general, the Missouri River supply was determined to require a similar treatment approach as the existing groundwater supplies and therefore few treatment processes would be substantially affected by the source change. The Missouri River supply (Lake Sakakawea or Lake Audubon) is expected to be an easier and less costly water supply to treat due to lower hardness and total dissolved solids than the existing groundwater supplies.

Hydraulic Gradeline. The pressure in the NAWS raw water pipeline to the Minot WTP will be significantly higher than the current hydraulic gradeline (HGL) of the treatment plant. Pressure reduction and rate of flow control will be required to integrate the Missouri River water supply with the existing plant's HGL.

Aeration. Aeration is not required for effective treatment of Missouri River water since dissolved hydrogen sulfide gas removal will no longer be an issue.

Reactor-Clarifiers. Reactor-clarifier performance is not expected to be significantly impacted by the Missouri River supply if Lake Sakakawea is selected; however, greater solids carryover may occur with treatment of Lake Audubon water due to its higher ratio of magnesium-to-calcium hardness compared to Lake Sakakawea. Using a conventional reactor-clarifier, a reduction in the current maximum allowable hydraulic loading rate (gpm/ft^2) would be recommended to help prevent excess solids carry over and improve filter operation. In meeting the proposed increased NAWS flow requirements, additional reactor-clarifier capacity will be required.

Recarbonation. No significant impact on existing recarbonation requirements or performance is anticipated. However, a new recarbonation basin and carbon dioxide feeders will be required with the new clarifier.

Filtration. No significant impact in filter performance or finished water quality is expected. However, peak filtration rates will have to be increased by 44 percent in order to provide 26 mgd. Rebuilding of the filter underdrain, media, piping and appurtenances is recommended due to the increased filter production rates. The reality of achieving a sustainable filtration rate of 4.6 gpm/ft^2 will have to be evaluated by testing and approved by the State DOH.

Primary Disinfection. Primary disinfection will be achieved at the booster pump station/pretreatment facility near Max, ND and it should not normally be necessary to provide additional disinfection at the treatment plant. If the existing groundwater supplies are used only during a emergency shutdown of the Missouri River supply, no pretreatment will be required (ozone and chloramine were planned for providing pretreatment for Souris River water), but in-plant disinfection of the groundwater (chloramination) will be necessary.

Secondary Disinfection. Secondary disinfection with chloramines will continue to be required at the plant to maintain residual levels in the distribution system; this is not expected to be impacted by the Missouri River supply. However, we would expect that the chloramine carryover from pretreatment would be sufficient to satisfy the majority of the distribution requirement. Little or no additional chloramine application should be required, except during emergency use of groundwater supply when primary chloramine addition will be required.

Chemical Feed. 1) Missouri River water will require significantly lower lime doses to meet finished water hardness goals. Doses are expected to decrease from the current average of 450 mg/L (as CaO) to approximately 170 (Lake Sakakawea) to 270 mg/L (Lake Audubon). 2) Chlorine dioxide feed will no longer be necessary, thus the sodium chlorite feed system and chlorine dioxide generator leases can be terminated. 3) Lower (or no additional) ammonia and chlorine doses will be necessary due to the presence of ammonia from chloramination at the pretreatment facility. 4) A soda ash feed system will be required if Lake Audubon is selected as the Missouri River supply. 5) If "enhanced coagulation/softening" is required under the D/DBP Rule, addition of a metal coagulant such as sodium aluminate or ferric chloride may be necessary to increase total organic carbon (TOC) removal during softening. 6) Lower doses of sodium silicofluoride will be required because the Missouri River supply has an approximate background fluoride concentration of 0.5 mg/L.

Clearwell. No impact in performance is anticipated in Phase I although additional clearwell capacity will be required during the Phase II plant expansion to 26 mgd.

High Service Pump Station. The existing 18 mgd (rated) high service pump station has a maximum theoretical capacity of approximately 14.7 mgd due to what appears to be hydraulic limitations in the finished water transmission system. Since the plant must be capable of meeting the Phase I NAWS project goal of 18 mgd, the transmission system should be upgraded to achieve higher flows. This pipeline system upgrade can also serve as the initial portion of the NAWS contract users transmission pipeline.

Sludge Thickening/Dewatering. Significantly less hardness will need to be removed from the Missouri River supply, thereby reducing sludge production (estimated to be 40-50 percent of current solids production levels).

Backwash Equalization. No impact in existing performance would be anticipated.

Water Quality Monitoring. On-line monitoring of plant influent water chlorine residual, pH and filter and finished water turbidity will be required for the pretreated Missouri River supply. Further, the plant must develop the ability to monitor ammonia levels.

Distribution System. The switch to the new Missouri River supply may destabilize (dissolve) solids which have accumulated on interior pipe surfaces due to the change in general mineral quality (solubility) of the new supply. Sloughing of these solids into the distribution system may cause a temporary increase in customer complaints of dirty water, higher bacterial counts, taste issues, solid accumulation in hot water tanks and changes in lead and copper levels. It will be necessary to initiate a thorough line flushing program once the source transition is completed.

3.3 2004-2005 PROCESS AUDIT

A number of key decisions regarding process and equipment changes and modifications have been made since the SA-19 1997 audit. These decisions modified the previously recommended process and plant improvements discussed earlier in this section.

The key process decisions, changes and modifications include:

- •** Lake Sakakawea was selected as the source of the Missouri River supply verses Lake Audubon;
- •** Ozonation/chloramines was replaced with free chlorine/chloramines as the raw water pretreatment disinfection process at the Max Booster Pump Station site;
- •** The Souris River is not used as a source of supply. The City uses only groundwater from the Minot and Sundre aquifers;
- •* Chlorine dioxide has been discontinued as the primary disinfectant. The plant now feeds a chlorine solution at the inlet to each recarbonation basin, and adds ammonia prior to the high service pumps (existing clearwell outlets);
- •* The original (1997) lime slakers have been replaced with similar model new lime slakers;
- •** Ultraviolet (UV) irradiation process was recommended post filtration at Minot WTP;
- •* The original (1997) vacuum drum sludge filters have been replaced with two new plate and frame sludge dewatering presses;
- •* Sludge transfer pumps were replaced with new pumping systems to new sludge presses;

- •* The original sludge withdrawal pumps for the 12 mgd Accelator® reactor-clarifier have been replaced;
- •* The 1997 plant and distribution system SCADA system was replaced with a new PLC-based system using Allen-Bradley ladder logic based PLC with Wonderware as the HMI (human-machine interface) software; and
- •* The old plant monitoring/control room were modified into a lunchroom and the main plant SCADA computer is now located in the laboratory.

* Action taken
** Actions proposed for NAWS

Each of the following process decision improvements and modifications that have occurred since the 1997 audit are discussed in detail in the following section:

- Lake Sakakawea as Source of Supply
- Use of Chlorine/Chloramines for Pretreatment
- Hydraulic Flow Control Facility
- Use of Selected Existing Groundwater Wells as Backup/Emergency Supply
- Use of UV Disinfection at the Minot WTP
- High Service Pumping and Clearwell Improvements
- Incorporation of Filter-to-Waste
- Backwash Supply Improvements
- Plate and Frame Sludge Dewatering Presses

3.3.1 Lake Sakakawea as Source of Supply

The decision to use Lake Sakakawea versus Lake Audubon as the source water will result in a more stable water quality and less challenging plant operations due to lower TDS (including sodium, chloride, sulfate and hardness), and lower total organic carbon (TOC) content. This results in lower chemical use, lower operating costs on a unit of water treated basis compared to water withdrawn from Lake Audubon and significantly less than the existing Minot groundwater supply. Other regional water suppliers which use Lake Sakakawea as source water include the cities of Dickinson, Garrison and Parshall.

Each of the regional treatment plants mentioned above is successfully softening Lake Sakakawea water using similar clarifier loading rates and recarbonation contact time design criteria proposed for the Minot WTP using only lime addition to achieve a softening pH in the range of 10.5 to 11.0. Soda ash addition should not be required to properly soften water at the Minot WTP to achieve the target hardness goal of 100 to 125 mg/L as $CaCO_3$. Excessive floc carryover due to a higher magnesium-to-calcium ratio should not be a problem using the Lake Sakakawea water supply. Lake Sakakawea water has a lower magnesium concentration than Lake Audubon water.

3.3.2 Treatment Process Modifications

Pretreatment Using Chlorine/Chloramines. The pretreatment process to be incorporated at the Max Area Booster Pump Station Pretreatment Facility will use a free chlorine dose of 4.5 mg/L with a minimum of 5 minutes of free chlorine contact time prior to ammonia addition at approximately a 4.5:1 chlorine-to-ammonia ratio. This disinfection process will achieve at least 3 logs of *Giardia* inactivation and 4 logs of virus inactivation prior to the point where the raw water pipeline crosses the Missouri River Basin/Hudson Bay divide, according to data presented in the Chloramine Challenge Study completed in 1995.

Based upon our bench-scale studies, this process will result in anticipated chloramine concentrations at the inlet to the Minot WTP ranging from approximately 2.0 to 3.5 mg/L depending on flow, temperature and water quality conditions. Chloramine residual decay rates are relatively low compared to free chlorine residual decay rates.

As discussed in the 1997 Regulatory Audit, the pretreatment process will also form some disinfection by-products (DBPs). However, DBPs should be lower than the proposed Stage 2 limits of 40 and 30 µg/l for THM and HAAs, respectively.

The plant will have to continuously monitor the total chlorine concentration in the influent water, and should also periodically determine the "free" ammonia concentration in the influent water, along with other general water quality measurements such as pH, hardness and alkalinity to properly operate the softening process. The plant should also periodically monitor the chloramine and ammonia concentrations at intermediate plant locations including the clarifier effluent, filter influent and filter effluent, to determine the fate of these species and to optimize the disinfection process. It may be necessary to occasionally boost the ammonia concentration and/or the chlorine concentration to maintain the desired distribution system residual.

Evaluations of the DBP formation potential and the higher concentration of chloramines that will be present in the plant influent were made with the following conclusions:

1. It is unlikely that the chloramine residual will need to be modified before water enters the reactor-clarifiers.
2. Typically, lime softening will be effective in DBP precursor reduction.
3. The State DOH verbally indicated, in 1997, that they would allow full disinfection credit. Disinfection credit needs to be confirmed.

Chloramines are stable in water and difficult to remove. Methods for removing or reducing the chloramine residual include addition of dechlorination chemicals, reverse osmosis, ion exchange, or filtering through granular activated carbon (GAC) absorbers. Chloramines are not particularly volatile, relatively stable in drinking water and are not typically removed when used for pretreatment.

Based on the information presented herein and internal discussions, the following summary and recommendations are made with respect to the presence of a chloramine residual in the inlet water to the Minot WTP:

- 3.5 mg/L is expected to be the highest chloramine residual entering the plant based on the proposed pretreatment process, but it is possible that lower residuals will be observed at the plant inlet during different times of the year due to high chlorine demand and decay in the raw water supply pipeline. The maximum allowable chloramine residual leaving a water treatment plant is 4.0 mg/L;
- The chloramine residual is expected to be persistent through the plant with little reduction from influent to distribution. There is no apparent regulatory or operational reason to consider removing the chloramine residual at the plant inlet;
- Maintaining a chloramine residual in the reactor-clarifiers and filters will minimize the potential for biological growth;
- Removing chloramines at the plant inlet and then re-adding chlorine and ammonia within the plant could increase the DBP concentrations compared to maintaining the chloramines in the inlet water;
- A small amount of excess chloramine and/or ammonia may volatilize in the softening basins, recarbonation facilities and the filters, and thereby reduce concentrations from inlet to outlet;
- If the plant effluent contains the target maximum concentration of 3.5 mg/L of chloramine residual, this will be higher than the chloramine residual currently leaving the plant (1.5 to 2.0 mg/L), but this level is considered acceptable based on practices in other parts of the country. Higher residuals may create customer inquiries and complaints due to changes in the taste and odor of the water, as well as potentially requiring changes in de-chloramination practiced by various industries and businesses (hospitals, kidney dialysis, aquariums and fish owners, etc). These issues can be overcome with suitable public education;
- There should be little need to continuously add chlorine and ammonia at the Minot WTP once chloraminated Lake Sakakawea water is introduced to the plant. However, the plant should continue to have the ability to store and feed some form of chlorine and ammonia, in case minor adjustments are periodically required, or if the emergency backup groundwater supply is ever required for use;
- The continued use of the existing chlorine gas system would require significant modifications to comply with Uniform Fire Code (UFC) requirements including addition of a chlorine gas scrubber system, when significant modifications are made at the facility. Due to the low and infrequent expected chlorine usage in the future, it is recommended to abandon the use of chlorine gas and converting to a calcium hypochlorite (dry) or sodium hypochlorite (liquid) system rather than make significant process and safety improvement to retain the use of gas;
- The plant should continue to have the ability to feed ammonia, but it may only be necessary to feed infrequently low doses. The existing ammonium sulfate feed system should be replaced. This system will need to be relocated if the existing lime and ammonia feed area is converted to office and control room space;
- Further study is recommended to verify DBP formation using the chlorine/chloramine pretreatment process, but information can be extrapolated from the previous

Chloramine Challenge Study. This study suggests that DBP concentrations will stay well below the MCLs of 80 µg/l and 60 µg/l for THMs and HAAs, respectively, as long as the free chlorine contact time is 10 minutes or less. However, we would recommend that additional bench scale analysis be conducted to verify the previous study results once a sample point is obtained at the Snake Creek Pumping Plant. There is no current apparent reason to reduce DBPs prior to or within the Minot WTP.

Hydraulic Flow Control Facility. It is recommended to provide coagulant storage and chemical feed systems as part of the influent flow control system. This will allow feeding of a primary coagulant such as ferric chloride or ferric sulfate to achieve 15 to 25% TOC removal for enhanced coagulation/softening, depending on the raw water TOC concentrations. Use of sodium aluminate for coagulation would not be recommended due to the age of the existing sodium aluminate chemical feed system and the handling difficulty and costs in obtaining this chemical.

Reactor-Clarifiers. It is recommended to reduce the rated capacity of the existing 12 mgd reactor-clarifiers to 10 mgd. This will reduce the solids carry over at to the filter at the maximum design flow rates and extend filter runs. The high solids carry over reduces filter performance especially when the filtration rate is increased to the 26 mgd maximum capacity.

A new reactor-clarifier along with additional recarbonation capacity will be required to achieve the ultimate 26 mgd capacity. This process expansion should be sized for approximately 10 mgd to account for treatment of recycle flows, staging of production and process redundancy. The new reactor-clarifier should have a process capability ranging from 5 mgd to a peak capacity of 11 mgd, thereby shifting the treatment burden from the older reactor-clarifiers. The existing lime slaker/feed system should be replaced by a new centralized closed recirculating pump feed system to reduce cost and O&M requirements. The existing lime slaker/feeder could be maintained for the old reactor-clarifiers but that would eliminate the use of that space for other purposes.

Recarbonation Basin. The existing recarbonation basins for each of the existing reactor-clarifier are adequate to continue providing pH adjustment to 9.0 to 9.3. At this time, it is anticipated to continue using CO_2 gas diffusion in the existing two recarbonation basins. A new recarbonation basin will be required for the new reactor-clarifier.

Filters. The existing 12 filters, with modifications, are capable of treating up to 18 mgd using the proposed Lake Sakakawea supply (operating at the current nominal filtration rate of approximately 3.0 gpm/sf). We anticipate that the existing filters can process in excess of 26 mgd (peak day demand) with media replacement and underdrain modifications as discussed in the 1997 report (future filtration rate would be 4.5 gpm/sf at 26 mgd). To reduce the system headloss and to accommodate the higher filter flow rates, new larger diameter filter piping, valves and flow meters will be required. However, this should be confirmed with pilot-scale testing. The existing filters are very shallow and the loading rates and filter run times need to be optimized to produce a consistent 26 mgd. State DOH approval will be required to operate the filters at the higher peak filtration rate. Additional discussions with State DOH need to be

initiated. It needs to be noted that the current proposal to locate the new reactor-clarifier adjacent to the filter building will essentially eliminate the option to expand the filter capacity of those facilities beyond that which can be achieved by the proposed modification of the existing units.

3.3.3 Use of Selected Groundwater Wells as Backup/Emergency Supply

Further discussions of backup/emergency supply options were held with plant staff and with the State DOH. The plant will need to maintain an emergency water supply source capable of providing anticipated average day demand, in the event the Lake Sakakawea supply is shut down for extended period due to any unplanned emergency or extensive maintenance activity.

The most-logical backup supply is continued use of selected existing City wells. With the wells operating in a backup/emergency status, they will need to be periodically pumped (every 2-3 months) to ensure functionality (pump and motor operation, pump seal condition, etc.), to purge the wellhead of "old" water and maintain the hydraulic production of the well screens. Maintaining all of the existing wells, with a total supply capacity of over 18 mgd, as an emergency backup supply would be expensive.

The anticipated average day demand at full NAWS build-out is 10.5 mgd. It is recommended that the groundwater capacity should be maintained at this rate for the NAWS project. The City should identify which are the most-productive, highest quality and most reliable existing wells to maintain. With respect to sulfides, the two existing aeration systems at the Minot WTP will be removed and not replaced since the Lake Sakakawea water does not require aeration. Under the proposed improvements, it will not be possible to aerate groundwater supplies when used during emergencies. This may result in a less-palatable water. During an emergency, it is viewed as a feasible operational procedure to deliver water for a brief period that has some level of taste and odor, versus the cost of maintaining the aeration system that will not be needed to treat Lake Sakakawea water. The application of chlorine may help eliminate some of the hydrogen sulfide concerns.

The existing wells, not selected for backup use, can be abandoned and have the electrical services terminated to reduce costs to the City and NAWS. Backup electrical generators for the dedicated emergency wells need to be provided and maintained.

3.3.4 Ultraviolet Disinfection at the Minot WTP

Ultraviolet (UV) disinfection will be incorporated at the Minot WTP as a post-filtration process. This location is consistent with the requirements proposed in the Draft USEPA UV Guidance Manual (June 2003). Two process related considerations for incorporating the UV system are water quality and hydraulics which are discussed in the following paragraphs.

Water Quality Impacts. UV Transmittance (UVT), is a measure of the propensity of the water to transmit light. This is one of the key parameters controlling UV disinfection system design. The lower the transmittance the more UV lamps and greater UV intensity required to achieve a received dose at a given flow rate. Constituents such as color, turbidity, dissolved organics,

hardness, suspended flocculants, etc. in the water affect the UVT. The typical post-filtration UVT ranges from 80 to 95 percent. The estimated UVT value is 90 percent. A pilot study, using the Lake Sakakawea water would be necessary to obtain UVT design criteria.

Dissolved compounds and suspended particulate material in the water can cause fouling in an UV reactor on the external surfaces of lamp sleeves and other wetted components (such as monitoring windows of UV intensity sensors). Fouling on the lamp sleeves reduces the transmittance of UV light through the sleeve into the water, thereby reducing efficiency. Fouling on the monitoring windows impacts UV intensity and dose monitoring. Hardness, alkalinity, temperature, iron concentration and pH all influence the rate of fouling and, subsequently, the frequency of sleeve cleaning. The following compounds can cause fouling:

- Compounds whose solubility decreases as temperature increases will precipitate (such as $CaCO_3$, $CaSO_4$, $MgCO_3$, $MgSO_4$, $FePO_4$, $FeCO_3$, $Al_2(SO_4)_3$). These compounds will foul medium pressure (MP) lamp sleeves faster than low pressure (LP) lamp sleeves due to differences in lamp operating temperatures.
- Compounds with lower solubility will precipitate (such as $Fe(OH)_3$, $Al(OH)_3$).

The only way to fully understand fouling potential is to conduct pilot-scale tests on the water of interest. Pilot studies conducted in different parts of the country on various water qualities have provided general indicators of fouling behavior. The data suggests that waters with total hardness less than 140 mg/L as $CaCO_3$, and waters with iron less than 0.1 mg/L allow "standard cleaning protocols" to be sufficient to overcome the impact of sleeve fouling at all sites tested.

This data supports the notion that UV disinfection of softened/filtered effluent from the Minot WTP should be successfully accomplished with minimal fouling if the post-filtration $CaCO_3$ hardness is maintained at less than 140 mg/l. The addition of polyphosphate to the softened water for sequestering will also assist in inhibiting precipitive fouling on the lamp sleeves.

UV System Hydraulic Impacts. Space, cost and reliability considerations indicate that a combined-flow UV system, installed downstream of the existing clearwell with new outlet pipes is the most appropriate approach for a post-filtration disinfection system. It is likely that two, one in service and one in standby, reactors would be required for the 26 mgd ultimate flow. The number of reactors will be a function of equipment size to fit the space available and hydraulics. The water level in the existing clearwell will need to be maintained at a level to ensure that the UV reactors are submerged at all times. This will all but eliminate operational volume of the existing clearwell and requires clearwell volume elsewhere on the site. Based on this, there are two potential options, locating the UV system in the space currently containing the existing high service pumps or in a new dry vault associated with the new remote clearwell. These options are discussed later in this report and recommendations provided.

3.3.5 Clearwell and High Service Pump Station(s)

In the 1997 report, it was assumed that the existing high service pumps would be maintained and the maximum capacity of the existing system would be increased from 14.7 to 18 mgd with the construction of a new 24-inch pipeline to the North Hill area. The plant would also continue to

use the two existing 24-inch finished water pipelines. The NAWS facilities anticipated anew clearwell and the construction of a new 8 mgd high service pump station to feed the NAWS distribution system at 160 psi. The NAWS clearwell was proposed to be hydraulically connected to the existing clearwell.

The City of Minot identified a desire to replace or rebuild the existing high service pumping facilities, because of the age and maintenance issues with the existing pumps. This consideration resulted in a proposed concept to construct a new clearwell and a new high service pump station serving both the City of Minot and the NAWS distribution systems as an integrated facility. This resulted in the potential to locate the new pump station either at the existing water treatment plant site or at a remote site across 16th Street. This also provided several options for locating the proposed UV facilities. This included a location in the existing pump room in the basement of the plant or at the location of the new clearwell-high service pump station.

Based on an evaluation of facilities siting issues and hydraulics, it is recommended to construct a new clearwell and high service pump station(s) to the east of the existing plant site, across 16th Street on property currently owned by the City. A new finished water transfer pipeline would be required to deliver filtered water by gravity from the existing clearwell outlet to the new clearwell. The new clearwell would act as the wetwell for the new high service pumps. The new high service pump station(s) would be connected to the existing City 24-inch transmission lines on this site and to the future NAWS transmission pipeline(s).

3.3.6 Filter-to-Waste

Most new surface water treatment plants are required to have a filter-to-waste (FTW) provision to allow more effective control of the filters and provide consistent finished water and low turbidity. Many older plants have been retrofitted with FTW over the past 5 to 10 years. FTW provides the ability to place the filter back in service after wasting filtered water during the initial operation (filter maturation). During this process, the filter effluent is diverted to recycle rather than to the clearwell until the filter effluent quality meets regulatory water quality standards. Most commonly, FTW is used when a filter is returned to service, either after backwashing or after the filter has been idle for a period of time. It can also be used to divert filtered water away from the clearwell if a filter is experiencing turbidity breakthrough or other operating or maintenance problems.

It is recommended that the Minot WTP be provided with FTW to reliably meet the IESWTR and to provide more operational flexibility. Re-configuring the filter effluent piping, valving and metering will be required to accommodate FTW, including the recycle of the FTW water. FTW is not now specifically required as part of Federal drinking water standards, but is recommended as good practice for surface water treatment plants. High rate filter operation of the Minot WTP would be extremely difficult without FTW capability. Replacement of the filter piping, valves and flowmeters is recommended to provide long time reliability and service.

Typically, the filter maturation period lasts for about 1.0 to 2.0 filter bed volumes. At the Minot WTP, 10,000 to 20,000 gallons of filter maturation volume could be produced during peak flow conditions. This would increase the total waste washwater volume produced during a single

backwash cycle to 50,000-70,000 gallons assuming that the filter-to-waste flow is co-mingled with the filter backwash washwater. This volume is important because the maximum hydraulic capacity of the equalization basin is 110,000 gallons.

There are several different options for incorporating FTW in existing plants. The most direct approach is to divert FTW flow with the filter backwash washwater and then deliver the combined flow to the backwash equalization basin. The combined flows would then be processed back to the influent end of the facility. However, a more common practice is to separate the filter-to-waste volume (better quality) from the backwash volume (poor quality) and send it directly back to the filter influent line. This approach minimizes the storage requirements and treatment requirements for the washwater. This is especially significant at Minot WTP considering that the quality of FTW flows will have low average turbidity compared to the relatively dirty (high solids) backwash water. This will help to conserve the capacity of the backwash equalization basin which is limited.

At the Minot WTP, FTW could be accomplished through one of the following methods:

1. Flow could be diverted to the existing 24-inch filter waste washwater pipeline extending from the filter gallery to the existing equalization basin.
2. Flow could be diverted to a new equalization basin and then pumped to the head of the plant or to the filter influent channel .
3. Flow could be collected in a common pipeline within the filter gallery and pumped to the filter influent channel (or to the head of the plant) without the use of an equalization basin.

Of the three options, the first option would be the easiest to implement from a piping perspective, but this would increase the volume of water to be received and recycled from the "clean water" side of the backwash equalization basin. Since the existing equalization basin volume is limited, diverting FTW water to the basin may result in the need to construct additional equalization storage, which would result in higher project costs.

In order to avoid the cost of constructing additional equalization storage, it is recommended to directly pump the FTW flow to the filter influent channel. The maximum pumping rate would be approximately 1,500 gpm which represents the maximum filter flowrate at 26 mgd with 11 filters in service and the one in FTW. The FTW recycle pump would require a 10 to 15 horsepower variable speed motor. Further review and discussion of the FTW options is required with the State DOH to determine if directing the FTW flow directly to the filter influent is acceptable.

3.3.7 Backwash Supply

The plant currently relies on a single backwash pump to clean the filter media. No backup backwash pump is available. The 1997 process audit recommended the addition of a second backwash pump to improve reliability in the event the existing pump fails. It is recommended that two new redundant (a replacement and a backup) backwash pump be installed to provide redundancy to this critical process element. The backwash capacity will need to be increased,

and the existing pump should be replaced with a new system sized to deliver the design backwash flowrate.

3.4 SUMMARY OF PROCESS AUDIT ISSUES AND RECOMMENDATIONS

Based on the this predesign review of process and related issues presented herein, the following recommendations are provided:

- Determine *Cryptosporidium* concentrations in Lake Sakakawea to define future disinfection requirements as recommended in Regulatory Audit;
- Conduct system DBP formation and chloramine decay bench-top studies using water from sample port at the Snake Creek Pump Plant;
- Eliminate the use of chlorine gas and use another form of chlorine since continuous post filtration chlorine addition at the Minot WTP will not be required with pre-treated Lake Sakakawea water;
- Install a new primary coagulant system capable of feeding iron-based chemicals as well as other possible chemicals;
- Construct a new clearwell with new Minot and NAWS high service pumps. Determine size of clearwell, number of pumps, and power supply;
- Replace the existing backwash pump with 2 new backwash pumps;
- Re-build filters with new media and underdrains to increase capacity to 26 mgd;
- Replace existing filter gallery piping, valves, controls and instrumentation to increase filter capacity and provide FTW capabilities;
- Construct a new 10 mgd total capacity reactor-clarifier(s) with recarbonation basin for ultimate 26 mgd capacity at the plant;
- Replace old chemical feed systems with new systems designed to feed appropriate doses required to treat Lake Sakakawea water up to 26 mgd. These chemical feed systems include carbon dioxide, polymer, ammonia sulfate, fluoride and polysulfate;
- Install new lime feed equipment and silo system during addition of 10 mgd clarification system. A new lime feed system would be used to feed lime to a new 10 mgd clarifier as well as existing 6 and 12 mgd units.
- Discuss the following with State of North Dakota DOH:
    - Log credit assignment for processes for compliance with *Giardia* and virus disinfection requirements, assuming *Cryptosporidium* concentrations are low enough for Bin 1 classification.
    - Use of 4.5 gpm/sf filtration rate and possible need for demonstration or pilot studies.
    - Recycle location for FTW flow, either to the filter influent (preferred) or to the head of the plant.

Section 4

SECTION 4

RECOMMENDED WTP FACILITY IMPROVEMENTS

4.1 BACKGROUND

The capacity and condition of the existing mechanical and electrical equipment at the Minot WTP have been evaluated. The purpose of the evaluation was to determine the reliability and capacity of the existing equipment to meet the operational and functional requirements for treating the new NAWS water supply and expanding the treatment and finished water pumping capacity to 26 mgd. The information obtained from this evaluation was integrated with the Regulatory Audit and Process Audit to establish the recommended improvements to and/or replacement of the plant equipment and processes. This predesign evaluation establishes the baseline for the Minot WTP Improvements Project design required for integration with the NAWS project. Major plant improvements are planned for the following process facilities:

- New Influent Flow Control Facilities (IFCF) and Flash Mix
- Pretreated Water Conveyance Improvements; Yard Piping and Indoor Piping
- New Chemical Feed Facilities
- New Softening / Clarifier Facility
- Equalization Basin & Pumping System Improvements
- Filtration System including Filter Backwash System Upgrades
- New UV Irradiation Disinfection
- New Reservoir and High Service Pump Station
- Plant Electrical System Upgrades
- SCADA System Improvements
- Well Field Improvements for Reliable Emergency Source
- Souris River Pump Station Improvements
- Additional Administrative and Operator Workspace
- Plant HVAC Improvements
- Evaluation only of existing Sludge Plate & Frame Presses. (No improvements currently needed.)

Each of these recommended major improvements are presented in this section. In addition a detailed evaluation was performed on the plant hydraulics and the improvements required to handle both the Phase 1 and Phase 2 design flow of 18 mgd and the Phase 3 design flow of 26 mgd. A discussion of recommended plant hydraulic improvements are also presented in this section.

4.1.1 Recommended Minot WTP Improvements

Section 3 provided an analysis of the existing Minot WTP operations, together with the improvements and alternatives necessary to increase production to meet the 26 mgd peak day demand. Figures 4-1 and 4-2 provide process flow diagrams of the recommended improvements. The recommended new improvements are shown in bold, and existing facilities are shown screened in gray. The sizes of all major piping improvements are shown on these drawings together with recommended new valves and electric actuators. (Filter valves will be supplied with Electric actuators, yet they are not shown on the diagrams for clarity.)

Key Facilities Decisions. The predesign effort evaluated several alternatives for the new treatment process facilities under consideration. The evaluation provided a discussion of the advantages and disadvantages and cost comparisons for the alternatives. The following list provides a summary of key decisions that need to be made by the project team (NDSWC, the City of Minot, and the project design engineers) prior to beginning final design of each specific phase of the project:

Phase 1 Improvements Project, key decisions include:

- Volume of the new finished reservoir (1.0 MG with UV and existing site constraints or ~2.0 MG which represents recommended volume requiring relocation of existing finished water lines)
- Location of new UV system (east side of 16th St. vs. in existing sub-basement)
- Location of new NAWS Control Room (new room in new reservoir / HSPS or in new designated area near entrance to the main WTP)
- Routing of new 13.8 kV electrical service to new reservoir / HSPS transformer (options include south of plant overhead, south of plant underground parallel to 42" pipe, north of plant overhead, or north of plant underground.)

Phase 2 Improvements Project, key decisions include:

- Type of new 10 mgd softening clarifier (low-rate conventional vs. high-rate DensaDeg type unit.) Concrete exterior walls of clarifier at minimum must be built as part of Phase 2 project – along with pipe spools for inlet, outlet, drains
- Installation schedule for new clarifier mechanism (inlet zone, launders, mixing turbine, rack arms and drive, sludge pump(s), etc. as part of Phase 2 project or Phase 3 project.)
- Location of new main electrical switchgear / MCC for plant (inside new IFCF clarifier building at southeast corner or remain in location of existing filter area and main plant entrance).
- Finalize concept layout for building modification needs to the south entrance of the existing WTP (define the type of administrative and control room facilities, and the area (sq feet) required for each.)

Plot Date: 10-SEP-2007 14:46

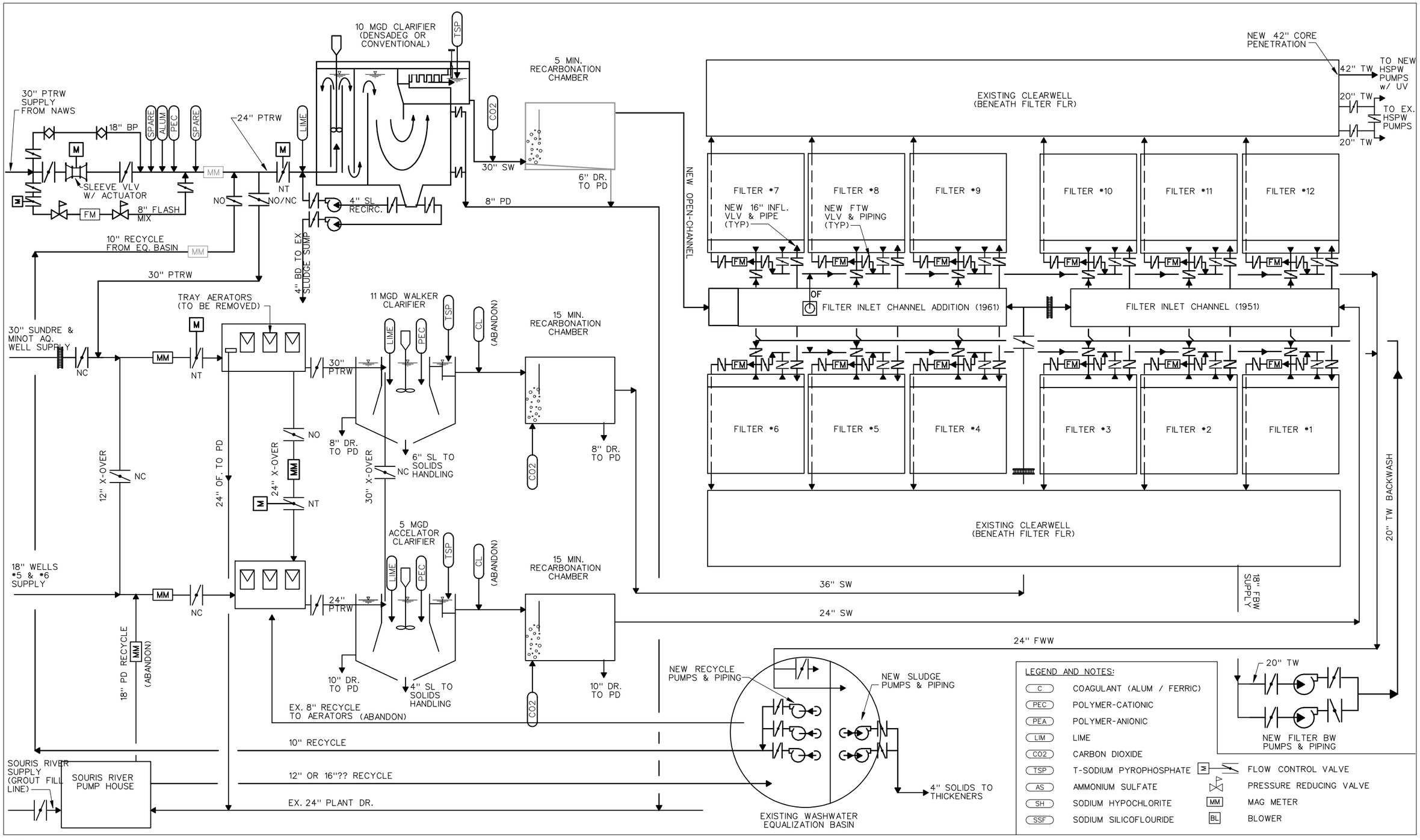

HOUSTON ENGINEERING, INC.

MWH

MINOT WTP IMPROVEMENTS PROJECT
PROCESS FLOW DIAGRAM - 1
Figure 4-1

Default ColorTable: bw.ctb DesignScript: LightScreen.pen PlotScale: 3:1 Plot Date: 10-SEP-2007 14:46

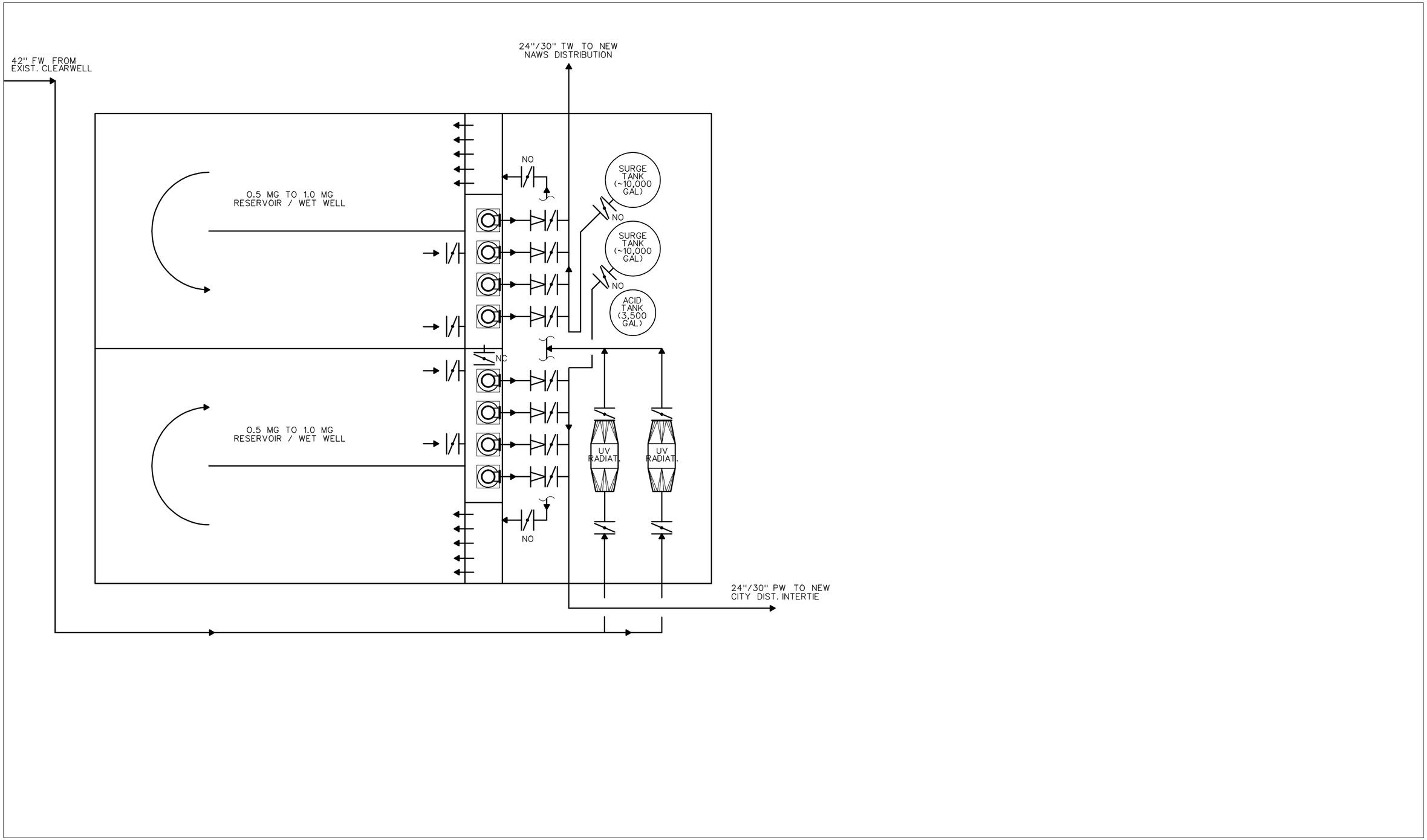

HOUSTON ENGINEERING, INC.

MWH

MINOT WTP IMPROVEMENTS PROJECT
1.0 MILLION GAL EAST SIDE RESERVOIR
PROCESS FLOW DIAGRAM - 2
Figure 4-2

Phase 3 Improvements Project, key decisions include:

- Existing lime slaker utilization (utilize the 2002 existing volumetric W&T pace slakers with minor adjustment to feed new lime slurry tank(s) vs. go to complete new gravimetric slaker system with total dust containment. Either of these options would feed the new recirculating lime slurry tank / pump system.)
- Determine which of existing wells are best to maintain as backup supply and whether backup emergency generator power should be provided to these well. Decide whether engine generator to be located at the well head or portable engine generator stored in shop location.)
- Finalize dewatered sludge disposal site alternative (utilize lined-cells at the existing City of Minot landfill or create new sludge disposal site on the Missouri River side of watershed divide.)

4.1.2 Recommended Design Criteria

Table 4-1 provides a summary of the recommended Preliminary Design Criteria for all phases of the Minot WTP Improvements Project. This design criteria will form the engineering basis for final design of all plant improvements. It is important that the design criteria be carefully reviewed by all parties and required changes to the criteria be made before the initiation of final design work.

4.2 PLANT HYDRAULICS

4.2.1 Description of Existing Plant and Hydraulic Capacity

The current Minot WTP is rated as an 18 mgd softening plant. Major unit processes include aeration, softening, recarbonation, filtration, and disinfection. The treatment plant was constructed in 1952 and expanded in 1963. The original plant had a rated capacity of 6 mgd and included a set of three aerators, a 6 mgd reactor-clarifier, a recarbonation basin, six constant-rate filters, a 250,000 gallon clearwell, four high service pumps, and a sludge thickener. In 1962, the plant was expanded to 18 mgd through the addition of a separate 12 mgd process train including a set of aerators, a new Walker Process reactor-clarifier, a recarbonation basin, six new constant-rate filters, 250,000 gallons of additional clearwell volume, four new high service pumps, and two vacuum filters for sludge dewatering (moved from wastewater plant). Major additions and modifications were constructed during the 1980s to increase sludge thickening capacity, convert the filters to a dual media design, and to add backwash treatment and recycle capability.

4.2.2 Current Operations Strategy and Hydraulic Constraints

Currently, flows from the two existing process trains remain separate through most of the plant combining at the filter influent channel. Most of the year, only one or the other process train is in operation. During the winter, the 6 mgd Accelator train is used, as flows currently do not exceed 6 mgd. At flows between approximately 6 and 12 mgd, the 12 mgd Walker train is used. Only on rare occasions have plant production requirements exceeded 12 mgd requiring both trains to be used.

TABLE 4-1

MINOT WTP IMPROVEMENTS PROJECT
PHASE 1, 2 AND 3 PRELIMINARY DESIGN CRITERIA

	Units	Phases 1 & 2	Phase 3	Comments
Plant Design Flow Capacities				
Max. Day Flow	mgd	18	26	
Avg. Day Flow	mgd	7.5	10.5	
Min. Day Flow	mgd	4	5	
Raw Water Supplies				
Primary Surface Water Supply				**New**
Source Lake	-	Sakakawea	Sakakawea	
Total Pump Capacity	mgd	18	26	
Backup Groundwater Supply				Existing
Source Aquifer	-	Sundre/Minot	Sundre/Minot	(14 wells)
Total Pump Capacity	mgd	17.7	17.7	
Influent Flow Control Facilities				**New**
Control Valve Type	in	Sleeve	Sleeve	
Valve Diameter	in	18	18	
Static Pressure @ 0 Flow	psig	150	150	
Pres Reduction @ Max Flow	psig	~95	~70	
Pres Reduction @ Min Flow	psig	150	150	
Bypass Pipe Dia.	in	18	18	
Bypass Max. Velocity	fps	12	12	Prevent Cavitation
Bypass Max. VelocityFlow	mgd	13.4	13.4	
Flash Mix (Pressurized Side Stream)				**New**
% of Max Day Flow	%	4	4	
Flow	gpm	500	725	
Mixing Intensity, G	1/sec	~1,000	~1,000	Gravity Flow, Adjustable
Influent Flow Meters				
NAWS Lake Sakakawea	in	30	30	**New - Mag**
Sundre & Minot Aquifers	in	30	30	Existing
Wells 5 and 6	in	12 or 18?	12 or 18?	Existing - Verify
Souris River	in	Abandon	Abandon	
Aeration Towers		Removed	Removed	
Accelator Softening Clarifier & Recarb Basin				Existing
Dimensions	ft x ft	60 x 60	60 x 60	Conventional Clarifier
Water Depth	ft	16.75	16.75	
Trough Effective Rise Area	sq ft	2,620	2,620	
Design Flow	mgd	6.0	5.0	
Surface Loading Rate	gpm/sf	1.60	1.33	
Volume	gal	320,000	320,000	
Detention Time	min	77	92	

TABLE 4-1

MINOT WTP IMPROVEMENTS PROJECT
PHASE 1, 2 AND 3 PRELIMINARY DESIGN CRITERIA

	Units	Phases 1 & 2	Phase 3	Comments
Recarbonation Basin				Existing
Dimensions (w x l)	ft x ft	15 x 46	15 x 46	
Water Depth	ft	14	14	
Volume	gal	72,000	72,000	
Design Flow	mgd	6	5	
Detention Time	min	17.3	20.7	theoretical plug flow
Walker Softening Clarifier & Recarb Basin				Existing
Dimensions	ft x ft	84.5 x 86.5	84.5 x 86.5	Conventional Clarifier
Water Depth	ft	19	19	
Trough Effective Rise Area	sq ft	6,050	6,050	
Design Flow	mgd	12.0	11.0	
Surface Loading Rate	gpm/sf	1.38	1.26	
Volume	gal	600,000	600,000	
Detention Time	min	72	78	
Recarbonation Basin				Existing
Dimensions (w x l)	ft x ft	14 x 84	14 x 84	
Water Depth	ft	14	14	
Volume	gal	123,000	123,000	
Design Flow	mgd	12.0	11.0	
Detention Time	min	14.8	16.1	theoretical plug flow
New Softening Clarifier (Conventional, Low-Rate Option)				**New**
Dimensions	ft x ft	-	78' x 78'	Conventional Clarifier
Water Depth	ft	-	19.33	
Trough Effective Rise Area	sq ft	-	5,560	
Design Flow	mgd	-	10.0	
Surface Loading Rate	gpm/sf	-	1.25	
Volume	gal	-	560,000	
Detention Time	min	-	81	
New Softening Clarifier (Densadeg, High-Rate Option)				**New**
Dimensions	ft x ft	-	42' x 39'	IDI Model 10 or Equal
Water Depth	ft	-	19.44	
Settling Tube Rise Area	sq ft	-	930	
Design Flow	mgd	-	10.0	
Settling Tube Loading Rate	gpm/sf	-	7.50	
Volume	gal	-	300,000	
Detention Time	min	-	43	
New Recarbonation Basin				**New**
Dimensions (w x l)	ft x ft	-	8 x 34	
Water Depth	ft	-	18	
Volume	gal	-	35,000	
Design Flow	mgd	-	10.0	

TABLE 4-1

MINOT WTP IMPROVEMENTS PROJECT
PHASE 1, 2 AND 3 PRELIMINARY DESIGN CRITERIA

	Units	Phases 1 & 2	Phase 3	Comments
Detention Time	min	-	5.0	theoretical plug flow
Filters				Existing
Type	-	Granular Media, Gravity, Rate-of-Flow		
Number	No.	12	12	
Dimensions	ft x ft	20 x 18	20 x 18	
Surface Area (each filter)	sq ft	360	360	
Total Surface Area	sq ft	4,320	4,320	
Filter Media				**New**
Anthracite				
Depth	in	20	20	
Effective Size, d_{10}	mm	1.0 to 1.1	1.0 to 1.1	
Specific Gravity	-	1.62	1.62	
Uniformity Coef.	-	< 1.4	< 1.4	
Sand				
Depth	in	10	10	
Effective Size, d_{10}	mm	0.45 to 0.55	0.45 to 0.55	
Specific Gravity	-	2.65	2.65	
Uniformity Coef.	-	< 1.4	< 1.4	
Filtration Rate				**New**
Flow Rate per Filter	mgd	1.50	2.17	All in Service
All in Service	gpm/sf	2.9	4.2	
One Out of Service	gpm/sf	3.2	4.6	
Filter Backwash Pumps				**New**
Type	-	End-Suction Centrifugal		Constant Speed
No.	No.	2	2	1 duty + 1 standby
Pump Capacity	gpm	6,800	6,800	at 18.8 gpm/sf BW Rate
Backwash Rate at 3C	gpm/sf	16.5	16.5	
Backwash Rate at 20C	gpm/sf	18.8	18.8	
Duration	min	7 to 8	7 to 8	
Volume Per Filter BW	gal	50,400	50,400	at 7.4 min & 19 gpm/sf
TDH	ft	40	40	(verify for final des)
Pump Horsepower (ea)	hp	100	100	(verify for final des)
Surface Wash				Existing
Type	-	(Rotating Arm)		
Wash Rate	gpm/sf	0.7	0.7	
Duration	min	3 to 4	3 to 4	
Volume Per Filter BW	gal	750	750	at 3 min & 0.7 gpm/sf

TABLE 4-1

MINOT WTP IMPROVEMENTS PROJECT
PHASE 1, 2 AND 3 PRELIMINARY DESIGN CRITERIA

	Units	Phases 1 & 2	Phase 3	Comments
Filter-to-Waste				**New**
Duration	min	20	20	
Volume Per Filter BW	gal	21,600	21,600	at 20 min & 3 gpm/sf
Backwash Equalization Basin				Existing
Washwater Holding Tank	No.	1	1	Round w/2 Compartments
Diameter	ft	32	32	
Max Water Depth	ft	18	18	
Volume on Recycle Side	gal	81,000	81,000	
Volume on Sludge Side	gal	24,000	24,000	
Volume per Backwash	gal	72,000	72,000	Includes FTW
Backwashes Held	No.	1.5	1.5	
Recycle Pumps to Influent				**New**
RP-1 Capacity	gpm	300	300	Constant Speed
RP-2 Capacity	gpm	530	530	Constant Speed
RP-3 Capacity	gpm	530	530	Constant Speed
Time to Empty Recycle Tank	hrs	1.6	1.6	(RP-3 in standby)
Sludge Pumps to Thickener				**New**
SP-1 Capacity	gpm	175	260	New Pumps for Phase 3
SP-2 Capacity	gpm	175	260	New Pumps for Phase 3
Time to Empty Sludge Tank	hrs	2.3	1.5	(SP-2 in standby)
Clearwell (Under Filters)				Existing
Dimensions	ft x ft	64 x 132	64 x 132	
Min. Water Depth	ft	4.0	4.0	Set by UV weir
Max. Water Depth	ft	10.2	10.2	
Vol Availabe for BW	gal	130,000	130,000	
Vol. Availabe for HS Pumps	gal	400,000	400,000	at max. water depth
UV Disinfection Facility (LP or MP)				**New**
No. of Reactors	No.	2	2	1 duty + 1 standby
Flow Capacity per Reactor	mgd	26	26	
Max Headloss at Design Flow	inches	7	10	
Design UV Transmittance	%	90	90	*
* may be significantly lower from Nov. 2005 Bench Scale Study Results - finalize during design				
UV Dose @ EOLL + Fouling	mJ/cm^2	32	32	
End of Lamp Life (EOLL)	-	0.75	0.75	
~ Power Draw per LP Reactor	kw	21	30	at EOLL
~ Power Draw per MP Reactor	kw	55	80	at EOLL
HS Pump Station Reservoir (1 MG Option)				**New**
No. of Cells	No.	2	2	
Dimensions Ea. Cell	ft x ft	50 x 90	50 x 90	
Min. Water Depth	ft	2	2	WSEL 1547.0
Max. Water Depth	ft	15	15	WSEL 1560.0
Storage at Min Water Depth	gal	67,000	65,000	per cell
Storage at Max. Water Depth	gal	505,000	505,000	per cell

TABLE 4-1

MINOT WTP IMPROVEMENTS PROJECT
PHASE 1, 2 AND 3 PRELIMINARY DESIGN CRITERIA

	Units	Phases 1 & 2	Phase 3	Comments
High Service Pumps (to Existing Minot Distribution)				**New**
Type	-	Vert. Turbines	Vert. Turbines	
No.	No.	4	4	3-duty + 1 stand-by
Total Firm Pumping Capacity	mgd	9.6	9.6	duty pumps only
Design Head	ft	208	208	90 psig
No. of Large Pumps	No.	2	2	1 stand-by
Large Pump Capacity (ea)	mgd	6.2	6.2	4,300 gpm ea
Large PumpHorsepower (ea)	hp	300	300	4,160 VAC, constant sp.
No. of Small Pumps	No.	2	2	0 stand-by
Small Pump Capacity (ea)	mgd	2.0	2.0	1,400 gpm ea
Small Pump Horsepower (ea)	hp	100	100	480 VAC, constant sp.
High Service Pumps (to new NAWS Distribution)				**New**
Type	-	Vert. Turbines	Vert. Turbines	
No.	No.	4	5	3,4-duty +1 stand-by
Total Firm Pumping Capacity	mgd	10.2	16.4	duty pumps only
Design Head	ft	346	346	150 psig
No. of Large Pumps	No.	2	3	1 stand-by
Large Pump Capacity (ea)	mgd	6.2	6.2	4,300 gpm ea
Large PumpHorsepower (ea)	hp	500	500	4,160 VAC, constant sp.
No. of Small Pumps	No.	2	2	0 stand-by
Small Pump Capacity (ea)	mgd	2.0	2.0	1,400 gpm ea
Small Pump Horsepower (ea)	hp	150	150	480 VAC, constant sp.

The existing 18-mgd (theoretical rating) high service pump station has an actual maximum capacity of approximately 14.7-mgd due to what appears to be hydraulic limitations in the finished water distribution system. Since the plant must be capable of meeting the Phase I NAWS project goal of 18-mgd, the pumping and transmission systems need to be upgraded. As part of the Minot WTP Phase 1 Improvements Project, design and construction of the new high service pump stations along with two new segments of main transmission pipelines will aid in achieving the required NAWS project flows.

4.2.3 New NAWS Water Supply at High Pressure

The pressure in the NAWS pretreated water supply to the Minot WTP will be significantly higher than the current hydraulic gradeline (HGL) of the treatment plant. Static pressures approaching 150 psig will be experienced at the inlet to the new IFCF. One (1) 18-inch diameter Bailey Polyjet (or equal) sleeve valve will be designed to reduce these high inlet pressures to the expected plant hydraulic gradeline pressure of about 9 psig (measured just downstream of the flash mix nozzle system). The sleeve valve will also provide rate of flow control. Figure 4-3 provides a preliminary layout of the new IFCF with dimensional requirements for the facilities. Figure 4-3 also provides a table of the design criteria to be utilized for the IFCF system. The influent NAWS pretreated water flow to the plant will be measured by a new magnetic flow meter located downstream of the flash mix system.

4.2.4 Water Surface Elevation for New Clarifier

The hydraulic profile of the proposed new facilities including the water surface elevation for the new clarifier must be compatible with the existing plant hydraulics. At near current peak flow of 12 mgd, the hydraulic profile through the large Walker clarifier unit, and through the existing filters was determined based upon existing plant As-Built drawings. Figure 4-4 presents this existing hydraulic profile. Prior to beginning final design of the facilities, a physical elevation survey at the plant will be conducted to verify the following actual water surface elevations (WSEL) at the following critical locations.

- WSEL in the existing clarifier upflow area and effluent launder
- WSEL in the recarbonation basin for each existing train
- WSEL and finish floor elevation of the filter inlet channel
- Filter structure and operating WSELs in both sets of filters

Through the findings presented in Figure 4-4, the hydraulic profile through the new 10 mgd softening clarifier was calculated, and is shown in Figure 4-5.

Significant findings and/or recommendations based upon these hydraulic profiles are:

- The existing 12-inch diameter filter inlet pipes must be increased to 16-inch diameter in order to conserve 0.5 feet of head loss under the peak condition of 26 mgd flowing to 11 on-line filters.

Plot Date: 10-SEP-2007 14:46

INFLUENT FLOW CONTROL FACILITY
SLEEVE VALVE DESIGN CRITERIA

DESCRIPTION	UNITS	VALUE	COMMENTS
CONTROL VALVE - TYPE	-	SLEEVE	w/ ELECT. ACTUATOR
MANUFACTURER	-	BAILEY POLYJET	OR EQUAL
MODEL NUMBER	-	810S	30" FLANGED ENDS
DIAMETER	INCHES	18	
MAXIMUM DESIGN FLOW	GPM	18,050	26.0 MGD
MINIMUM DESIGN FLOW	GPM	2,080	3.0 MGD
4-20 mA SETPOINT SCALE	GPM	2,000-18,050	3 - 26 MGD
SYSTEM STATIC PRESSURE	PSI	150	
PRES. DROP @ MAX. FLOW	PSI	~70	
PRES. DROP @ MIN. FLOW	PSI	~145	
DOWNSTREAM PRESSURE	PSI	~9	
CONTROL VALVE BYPASS - TYPE	-	PLUG VLV	BYPASS OF SCH. 40 304 SS PIPING
MAXIMUM DESIGN FLOW	GPM	9,000	13.0 MGD

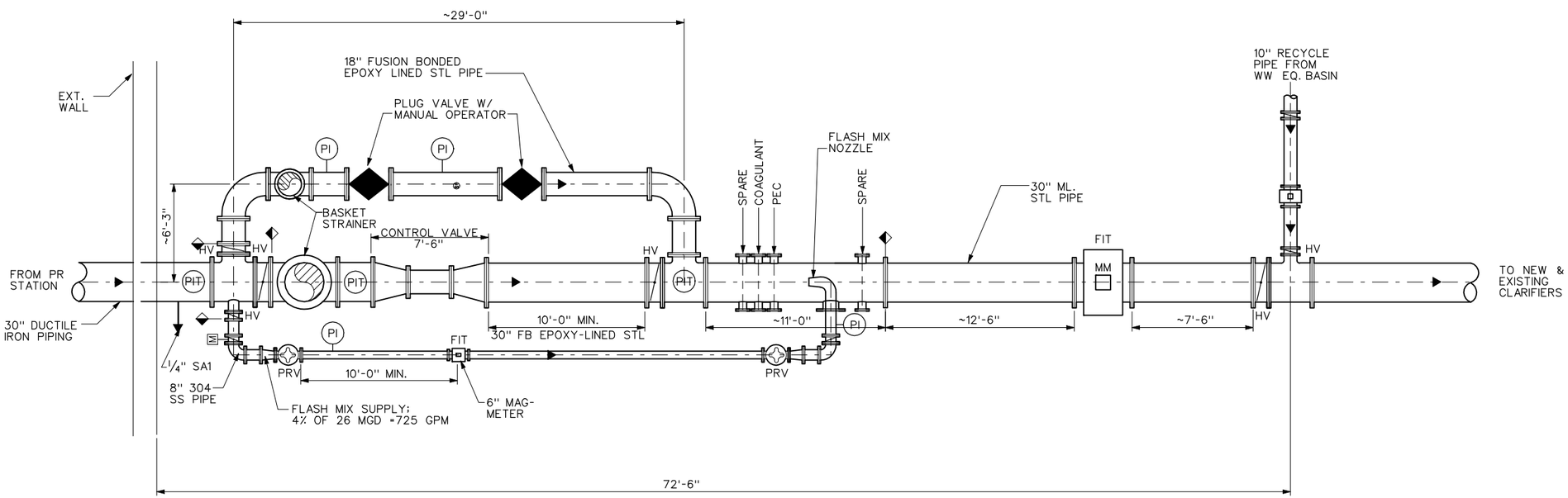

PLAN VIEW

PIPELINE SCHEMATIC
NOT TO SCALE

HOUSTON ENGINEERING, INC.

MWH

MINOT WTP IMPROVEMENTS PROJECT
NEW INFLUENT FLOW CONTROL FACILITY
CONCEPT PLAN
Figure 4-3

Plot Date: 10-SEP-2007 14:46

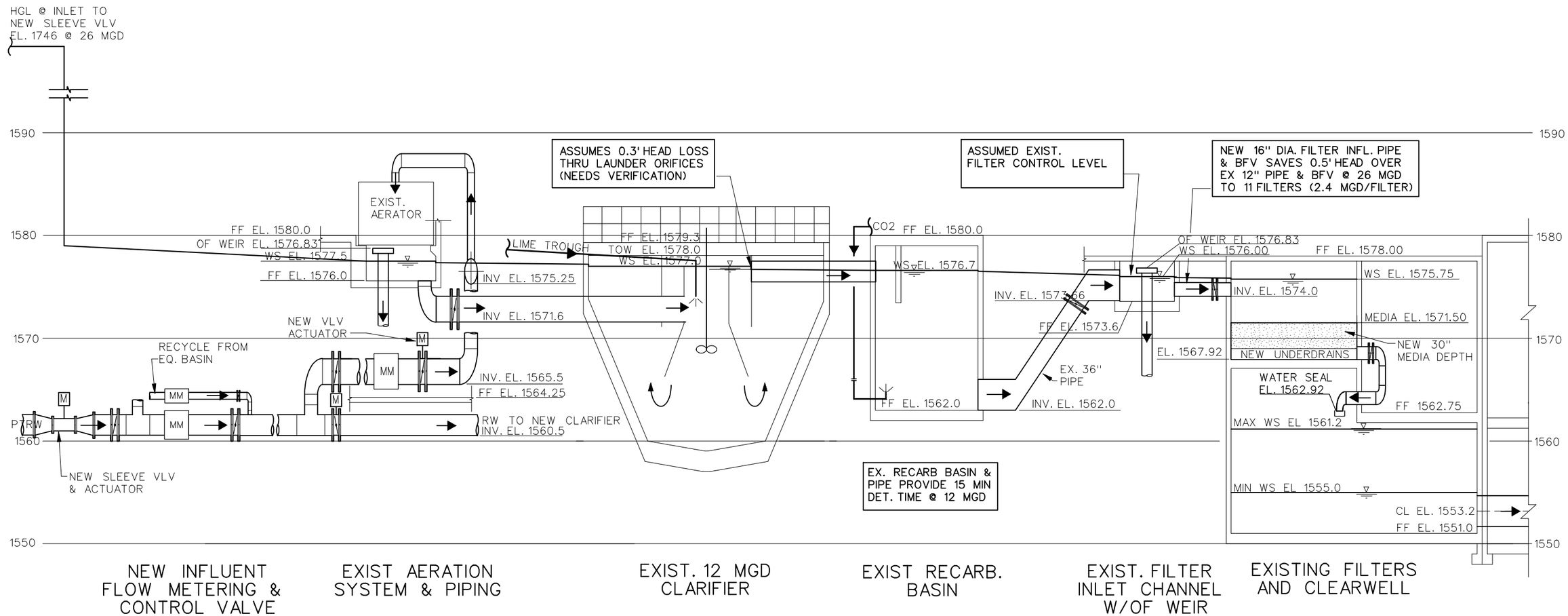

HYDRAULIC PROFILE OF EXISTING SOFTENER & RECARB TRAIN @ 12 MGD

ABBREVIATIONS

BD = BLOW-DOWN
EX = EXISTING
FF = FINISH FLOOR
INV = INVERT
LVL = LEVEL
OF = OVERFLOW
PTRW = PRETREATED RAW WATER
TOW = TOP OF WALL
TW = TREATED WATER
VLV = VALVE
WS = WATER SURFACE

HOUSTON ENGINEERING, INC.

MWH

MINOT WTP IMPROVEMENTS PROJECT
EXISTING 12 MGD CLARIFIER & RECARBONATION TRAIN
HYDRAULIC PROFILE
Figure 4-4

Plot Date: 10-SEP-2007 14:47

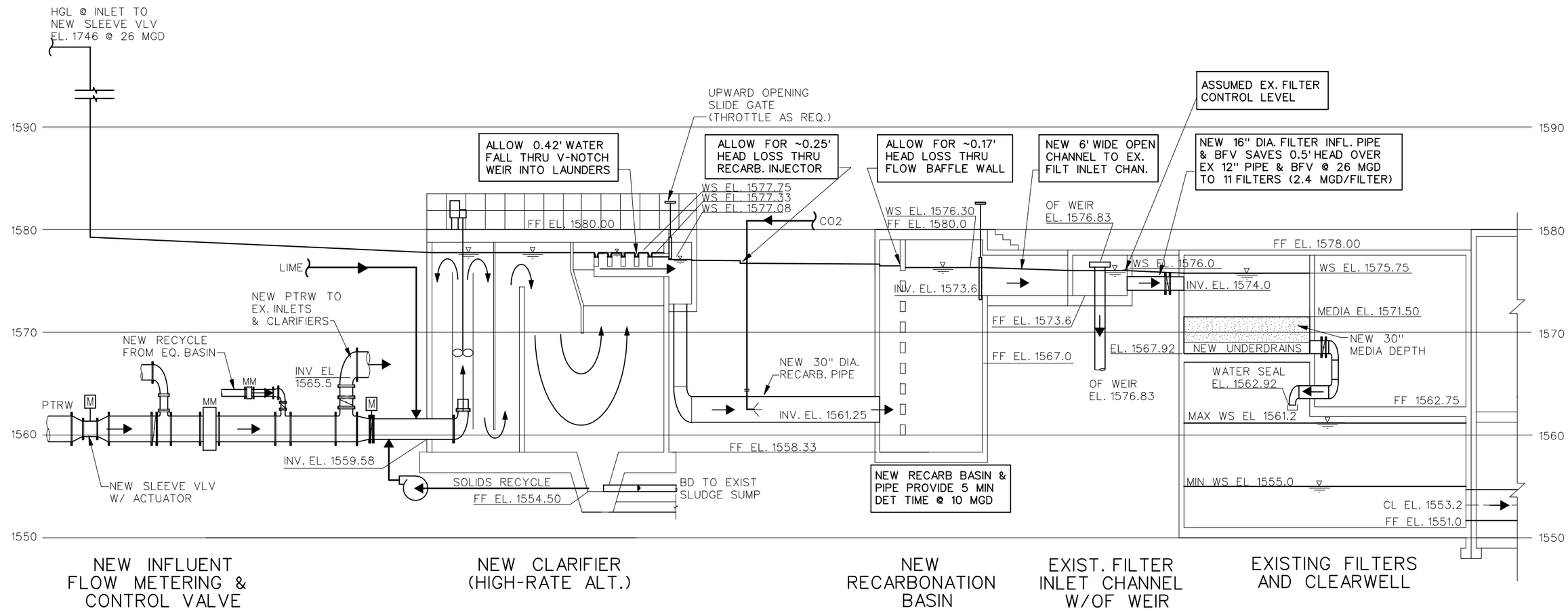

HYDRAULIC PROFILE OF NEW SOFTENER & RECARB TRAIN @ 10 MGD

ABBREVIATIONS

BD = BLOW-DOWN
EX = EXISTING
FF = FINISH FLOOR
INV = INVERT
LVL = LEVEL
OF = OVERFLOW
PTRW = PRETREATED RAW WATER
TOW = TOP OF WALL
TW = TREATED WATER
VLV = VALVE
WS = WATER SURFACE

HOUSTON ENGINEERING, INC.

MWH

MINOT WTP IMPROVEMENTS PROJECT
NEW CLARIFIER & RECARBONATION TRAIN
HYDRAULIC PROFILE (OPTION 2)
Figure 4-5

- The new 16-inch filter inlet pipes will result in a control WSEL in the filter inlet channel of 1576.0 ft. At this elevation, a constant WSEL of approximately 1575.75 ft can be maintained above the media in the filters.
- The new clarifier system's hydraulic profile assumes an open channel connection to the west end of the existing filter inlet channel. This open channel will minimize head loss through the new process system and prevent surging or "air burping" which could occur if a pipeline were installed instead of an open channel.
- The water surface elevation in the new clarifier unit is conservatively set at elevation 1577.75 which is approximately nine inches higher than the current reported water surface elevation in the existing reactor clarifiers of 1577.0 ft. About 3 to 5 inches of this extra 9 inches of head will be used downstream in the new sidestream recarbonation system for the new 10 mgd process train.

Given the above, the upper finished floor elevation of the new IFC & Clarifier building is preliminarily set at 1580.0, or about 0.7 feet higher than the finish floor elevation in the existing clarifier building (el. 1579.3). Once final design of the new clarifier building is initiated, it is possible that this finish floor elevation may be lowered slightly, depending upon final design considerations (i.e. hydraulic, structural, and freeboard requirements) for the new clarifier.

4.2.5 Existing Clearwell 20-Inch Outlet Pipes.

The existing 20-inch diameter pipe spools leaving the existing clearwell are too small for a peak flow of 26 mgd. Currently, these two 20-inch diameter pipes leave the existing clearwell at centerline elevation 1551.75. At 26 mgd peak flow condition, 13 mgd of filtered water would have to pass through each of these pipes, resulting in a flow velocity of 9.2 fps. This high velocity results in excessive headloss through these pipes and thus loss of usable clearwell volume. For either of the two UV location options described in this report, these two pipes will need to be replaced by core-drilling either one or two large diameter holes into the existing clearwell (through back-to-back, vertical concrete walls). The size of the holes will likely be either 36-inch or 42-inch diameter, and the number of holes drilled (1 or 2) will depend upon which option is selected for location of the UV system.

4.2.6 Existing Clearwell Storage (Effects of Backwash Water Requirements and New UV System)

The existing clearwell serves as the storage holding tank for the filter backwash water supply. The existing clearwell will also supply water to the new UV system and the downstream new reservoir and high service pump station. The hydraulic profile interaction of the existing clearwell with these new facilities is shown in Figures 4-6 and 4-7. Three different UV options are considered in these figures. The option of providing a low pressure UV system in the existing sub-basement is not hydraulically feasible, as shown in Figure 4-6. There are several important hydraulic conditions associated with the use of the existing clearwell that will constrain development of the new downstream UV facility and reservoir. These conditions are:

- **Maximum Allowable Water Surface Elevation is 1561.2 for all Flows**. The existing clearwell is located directly underneath the filters and the underside of the top concrete slab of this structure has an elevation of 1561.5. Given this elevation,

Plot Date: 10-SEP-2007 14:47

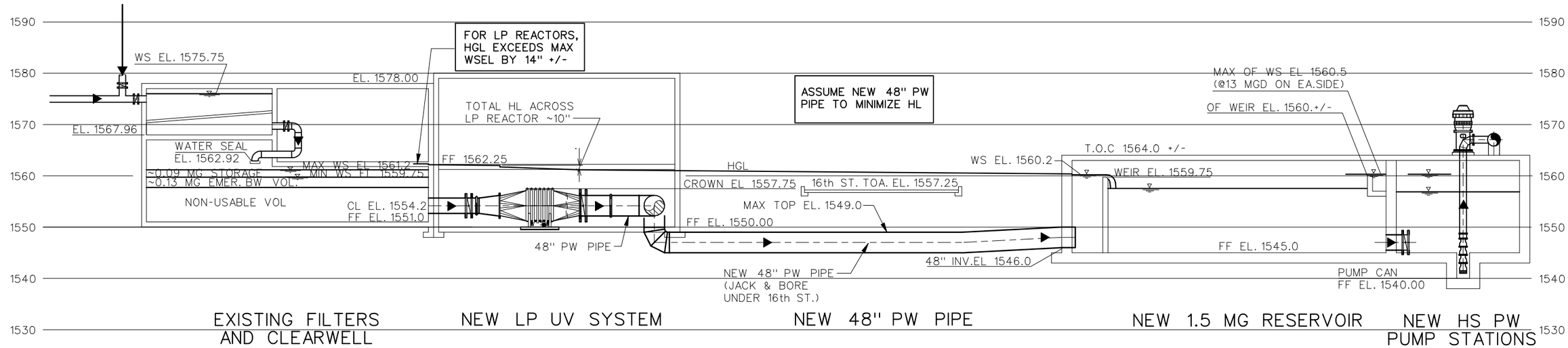

HYDRAULIC PROFILE w/ LOW PRESSURE UV @ 26 MGD

NOTE:
HYDRAULIC PROFILE FLOODS FILTER DECK AT 26 MGD.

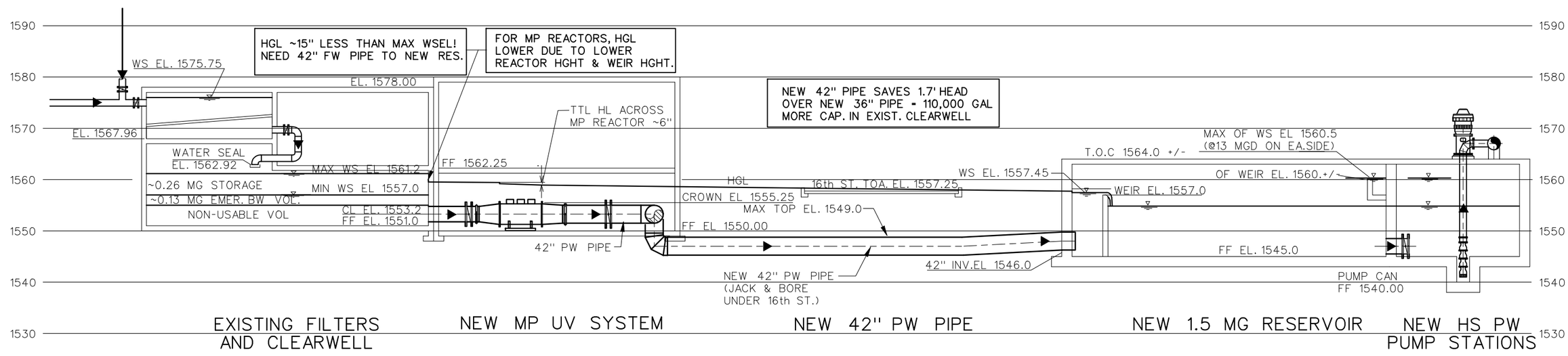

HYDRAULIC PROFILE w/ MEDIUM PRESSURE UV @ 26 MGD

NOTE:
HYDRAULIC PROFILE IDENTICAL FOR ALTERNATIVE 2, NORTHWEST RESERVOIR LOCATIONS.

HOUSTON ENGINEERING, INC.

MWH

MINOT WTP IMPROVEMENTS PROJECT
EAST SIDE RESERVOIR ALTERNATIVE NO. 1
HYDRAULIC PROFILE w/ UV IN EXISTING BASEMENT
Figure 4-6

Plot Date: 10-SEP-2007 14:47

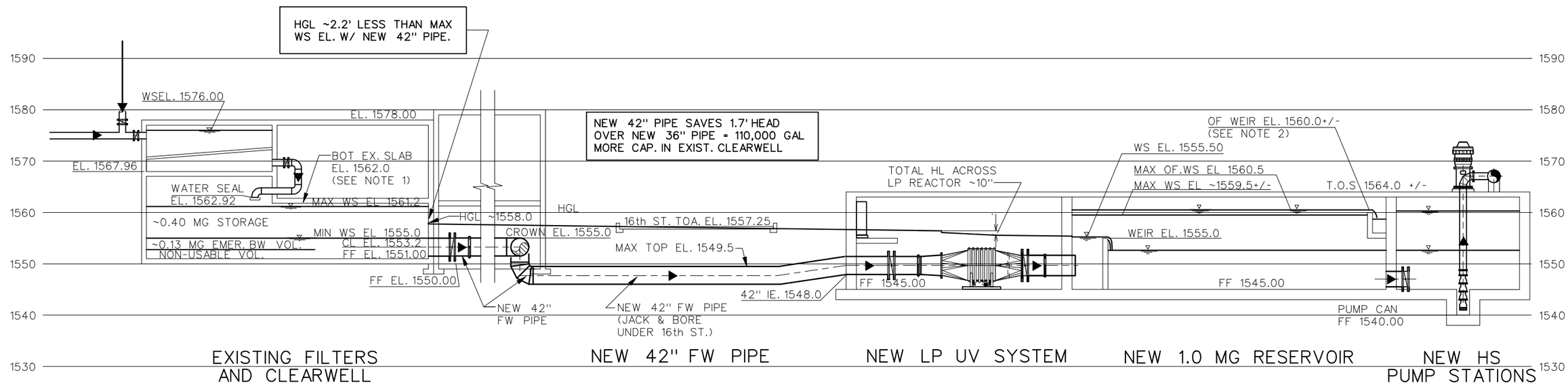

HYDRAULIC PROFILE w/ LOW PRESSURE UV @ 26 MGD

NOTES:

1. EXIST. CLEARWELL HAS NO OVERFLOW. WTR. OVERFLOWS 2.5' x 2.5' HATCHES IN FLR OF FILTER PIPE GALLERY.
2. NEW OF WEIRS TO PASS 13 MGD EA SIDE OVER 18' LONG WEIR. (H ~ 0.5' OVER WEIR @13 MGD)
3. HYDRAULIC PROFILE IDENTICAL FOR ALTERNATIVE 2, NORTHWEST RESERVOIR LOCATIONS.

HOUSTON ENGINEERING, INC.

MWH

MINOT WTP IMPROVEMENTS PROJECT
EAST SIDE RESERVOIR ALTERNATIVE NO. 1
HYDRAULIC PROFILE w/ UV NEXT TO RESERVOIR
Figure 4-7

the maximum water surface elevation in this existing clearwell and all downstream facilities is 1561.2. This WSEL has a significant influence on the depth and ultimate volume capacity of the new reservoir facility

- **UV Reactors must Remain Flooded at All Times**. In order to insure proper cooling of the UV lamps and proper hydraulic operation of the reactors, all reactor systems must have a downstream weir to insure that the hydraulic grade line at the reactor never drops lower than the top of the reactor. This also inhibits any air from being able to enter the reactor and adversely effect reactor performance (decrease in UV transmittance).
- **At Least 125,000 Gal of Existing Clearwell Volume to Remain Available for Filter Backwash at all Times.** With the addition of the new dual media and filter underdrain / air scour system, it is estimated that the backwash of one filter will require approximately 50,000 to 60,000 gallons of finished (chlorinated) water. Each vertical foot of the existing clearwell has a capacity of approximately 63,000 gallons. It is recommended to have at least two backwash volumes of water available from the existing clearwell for two successive filter backwashes. This means that at least 125,000 gallons of water or two vertical feet of clearwell volume must be available for backwash at all times.
- **Hydraulics of LP UV Reactors too Tight in Existing Sub-basement**. Figure 4-6 shows that a low pressure UV system has approximately 14-inches too high of a hydraulic grade line to accommodate the hydraulic constraints given above. This hydraulic analysis was performed with the reactor height minimized (i.e., the manufacturer to reduce the height of the legs on their standard reactor by 4-inches) and also utilizing large inlet and outlet piping from the reactor (42-inch diameter influent piping and 48-inch diameter effluent piping). The principal reason this hydraulic profile does not work in this alternative is due to the large height of the LP reactor (at ~ 97-inches) as compared to the height of MP reactors (~ 55 to 70 inches). For these hydraulic and size reasons, this option of utilizing an LP UV reactor in the existing sub-basement will no longer be considered.

As shown on the lower profile of Figure 4-6, if a medium pressure UV unit is installed in the existing sub-basement, the maximum available storage in the existing clearwell would be approximately 0.3 million gallons. If a new UV system is installed with the new reservoir on the east side of 16th Street (see Figure 4-7) the maximum available storage in the existing clearwell would be approximately 0.4 million gallons. The available storage volume is that which can be utilized by the new high service pumps.

4.3 INFLUENT FLOW CONTROL FACILITIES AND FLASH MIX

The Influent Flow Control Facilities (IFCF) will control and measure the amount of flow entering the WTP from the NAWS supply pipeline. Due to the overall length requirements of this facility (see Figure 4-3), it is recommended that the facility be located in the lower level of the new IFCF and Clarifier Building.

4.3.1 Description

A new influent flow control facility (IFCF) will be required at the Minot WTP to reduce the pipeline delivery pressure and to provide numerous plant headworks functions. These functions include pretreated water flow control and metering, primary coagulant and polymer aid injection, flash-mixing, and a new introduction point for Equalization Basin recycle flow. The flow control and pressure reduction for the NAWS pretreated water supply will be accomplished using one in-line sleeve valve and a bypass assembly with manually operated plug valves. A new in-line, magnetic flow meter will measure only pretreated raw water flow rate (i.e., will not include recycle flow). Recycle water from the Equalization Basin will be measured separately and returned to the main process flow just downstream of the new mag meter.

4.3.2 Pressure Reducing Sleeve Valve

The minimum plant flow was established at 4.0 mgd (2,780 gpm) under current demands and 5.0 mgd (3,470 gpm) under future demands. Maximum (peak day) Minot WTP treatment process capacity will be 26 mgd (18,055 gpm). Delivery pressure in the pipeline at the Minot WTP will vary from 150 psig (static at zero flow) to approximately 70 psig (dynamic at 26 mgd flow). The pressure reducing valve will be designed to reduce influent pressures from approximately 70 psig (at maximum plant flow of 26 mgd) up to nearly 150 psig (at minimum plant flow condition of 4 mgd).

A sleeve-type control valve is recommended for the IFCF to control flow and reduce pressure in the pretreated water supply. A sleeve valve controls flow and reduces pressure by throttling flow across control orifices located around the valve sleeve. The orifices in the sleeve direct flow to the center of the valve, away from metal components, minimizing cavitation damage to the valve.

Bailey, a reputable sleeve valve manufacturer, was contacted to provide information for this specific project application. (Other specialty valve manufacturers that make similar pressure reducing type valves include Golden Anderson and ClaValve.) For the new 30-inch diameter pretreated water supply pipe to the Minot WTP, Bailey recommends their 18-inch Polyjet model 810S in-line sleeve valve. The valve would have a stainless steel concentric reducer and increaser included as part of the valve construction to accommodate the 30-inch diameter pipe connecting flanges. Stainless steel pipe will be provided at least four pipe diameters downstream of the sleeve valve for protection against possible cavitation damage. The control valve would be set for a minimum flow of about 2,500 gpm and maximum flow of about 19,000 gpm with actual process flow feedback being provided by a 4-20 mA analog output signal from the magnetic flow meter.

Estimated costs for the Bailey Polyjet 18-inch model 810S in-line sleeve valve with 30-inch increases and flanges will likely exceed $100,000. The maximum length of the valve from flange to flange will be approximately 90-inches.

4.3.3 Basket Strainers

Basket strainers are recommended prior to the sleeve valve and on the bypass pipe prior to the plug valves to protect these valves and downstream instruments (including the magnetic flow

meter) from possible damage resulting from possible construction debris in the NAWS pipeline. Basket strainers will have flanged ends and will be situated such that an overhead monorail will be able to lift out the baskets for cleaning and service. It is anticipated that the basket strainers would only collect debris during the first six months of system startup and commissioning, after which time very little debris, if any, is expected.

4.3.4 Bypass Assembly for Sleeve Valve Maintenance

A bypass around the sleeve valve will be provided for periods when maintenance is performed on either the sleeve valve or the basket strainer. The bypass is sized at 18-inch diameter for a maximum flow of 13 mgd (9,000 gpm) and employs two lubricated plug valves to reduce pressure. The 13 mgd maximum flow limits water velocities to less than 12 fps in the bypass pipeline and thus will limit the potential for cavitation in the manually operated plug valves. The concept design is to equip each plug valve with a manual hand-wheel actuator and with a physical, welded mechanical stop to limit the degree to which the valve can be opened. The mechanical stops would serve as a fail-safe means to insure that operations staff could never open the valve beyond the safe operational limits of the bypass pipeline. No electric or other type of automatic actuators would be provided for these manual valves. The bypass system will be constructed of fusion-bonded epoxy lined steel pipe. (Velocities may be too high for mortar lined pipe and the stagnant water in the bypass creates concerns of microbiologically induced corrosion attacking stainless steel pipe.) The bypass will only be manually operated and it is expected that the bypass will be used infrequently and for short time periods.

4.3.5 Flash Mix System

The capability to inject a primary coagulant, (such as aluminum sulfate or ferric chloride) and flocculent aids will be provided upstream of this primary metering system. A new flash mix system will be provided to draw a sidestream of high-pressure water prior to the pretreated water entering the sleeve valve assembly. The excessive water pressure in the sidestream flash mix supply will be reduced with two pressure reducing valves to lower the pressure to approximately 20 psig.

4.4 PRETREATED WATER & RECYCLE WATER PIPING IMPROVEMENTS

4.4.1 Description

Several new 30-inch diameter and smaller pretreated and recycle water pipelines must be installed in the yard outside the treatment building to facilitate connecting the WTP to the new NAWS supply. These include:

- New 30-inch pretreated water influent pipeline connecting the NAWS pipeline to the IFCF
- New 30-inch pretreated water pipeline connecting the IFCF to the existing 30-inch Sundre Aquifer pipeline and existing aeration basins
- New 16-inch recycle pipeline from the Souris River pump house to the Equalization Basin

- New 10-inch recycle pipeline from the backwash equalization basin to the IFCF

The location of these new yard pipes are shown on Figures 4-8 and 4-9 The two new 30-inch pipelines together will allow all of the clarifiers to operate in parallel, when necessary. The new 30-inch pipeline to be connected to the Sundre Aquifer pipeline will be installed along the north side of the plant building as shown in Figure 4-8. The new 30-inch tie-in to the main plant is proposed just upstream of the 12-inch crossover between the 18-inch Well #5 & #6 influent line and 30-inch Sundre Aquifer line.

Existing Drain and Recycle Pipelines. The existing lines to and from the backwash equalization basin (i.e., the 24-inch filter backwash line, 24-inch overflow line from the equalization basin to the river pump house, 4-inch line to sludge thickeners, and 8-inch line to the 12 mgd clarifier) were installed during the 1987 upgrades to the plant. These pipes are believed to be in good condition as no known evidence of leaks or deterioration are known. The main 24-inch plant drain line to the river pump house was installed during the initial plant construction. No problems are currently known of this pipe; however, the condition of this pipeline should be evaluated prior to further utilization.

Existing Raw Water Pipelines for Emergency Backup Supply. The 18-inch river water feed line from the Souris River to the pump house will be plugged and abandoned. The 18-inch raw water feed line in the yard from City wells 5 & 6 (Minot wellfield) may also be abandoned, after completion of the Phase 2 project, if this water source is determined to be no longer needed for backup emergency supply. The other principal ground water supply pipeline is the 30-inch Sundre aquifer wellfield pipeline which was installed with the 1961 plant expansion. This pipeline is in good condition and this groundwater supply should be maintained as the backup emergency for the plant in case the NAWS pipeline is ever out of service for an extended period of time.

4.4.2 Raw Water Pipeline Modifications Inside Plant

Two raw water pipelines and recycle pipelines enter the existing building basement to feed the existing aerators. Aerated water then flows to the two existing clarifiers. Each pipeline has butterfly isolation valves and a new Rosemount magnetic flowmeter near their entry into the treatment plant basement (Photo 4-1). These pipelines will continue to be used to deliver NAWS water to the existing clarifiers and will also remain inter-connected with the emergency backup wellfield supply pipelines. The existing aerators will be removed, but the inlet water will still be delivered to the existing outlet “forebay piping” which directs flow to the existing reactor-clarifiers. The existing magnetic flow meters and new electrically actuated butterfly valves will be used to control and split flow to the existing clarifiers.

Assuming the Sundre wellfield is to be maintained as a backup/emergency water source, once NAWS water is provided to the plant, the raw water line for Wells 5 & 6 (Minot wellfield) could be abandoned and removed from the basement of the building.

Plot Date: 10-SEP-2007 14:47

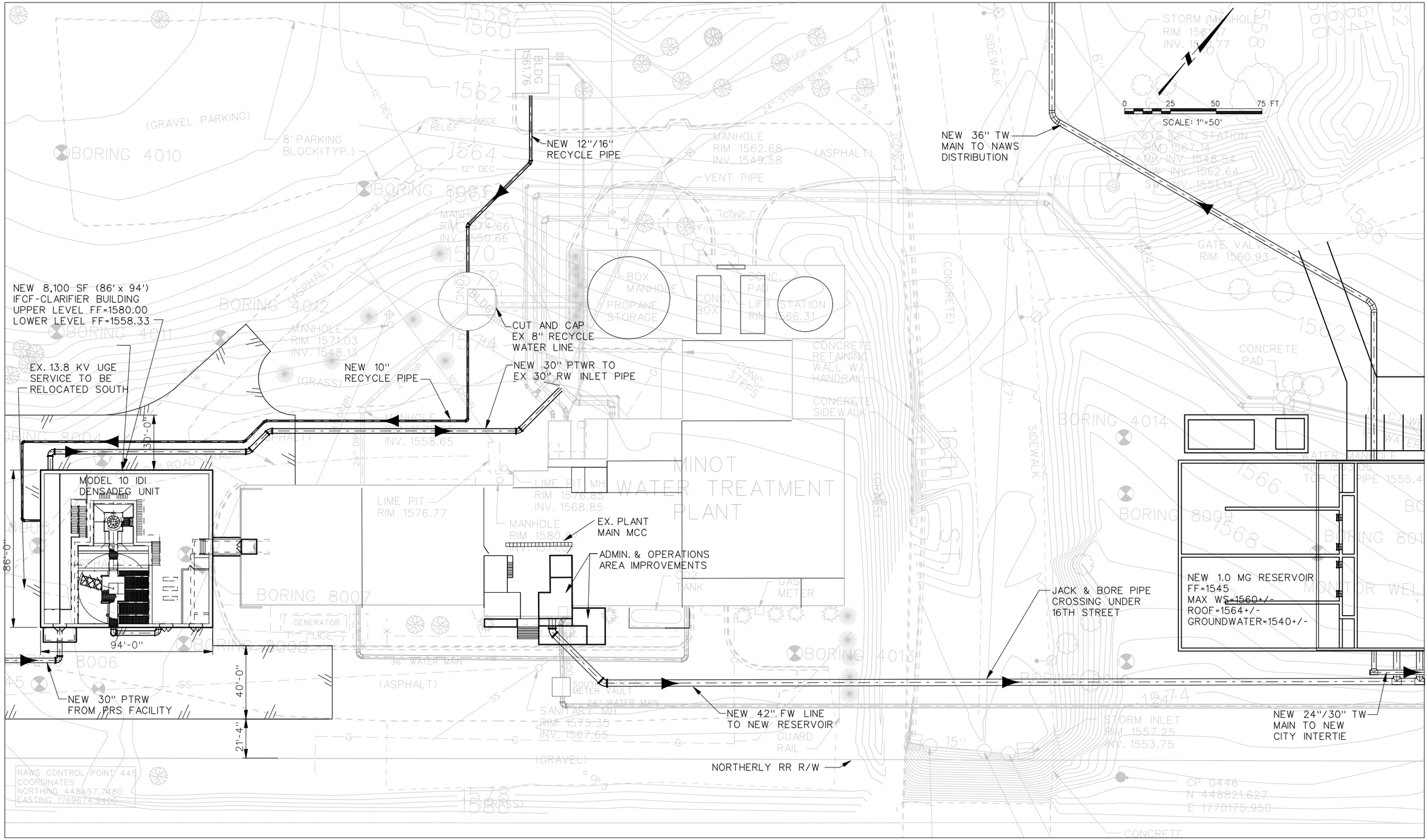

HOUSTON ENGINEERING, INC.

MWH

MINOT WTP IMPROVEMENTS PROJECT
NEW IFCF & CLARIFIER BUILDING
ALTERNATIVE 1 - SITE PLAN
Figure 4-8

Plot Date: 10-SEP-2007 14:47

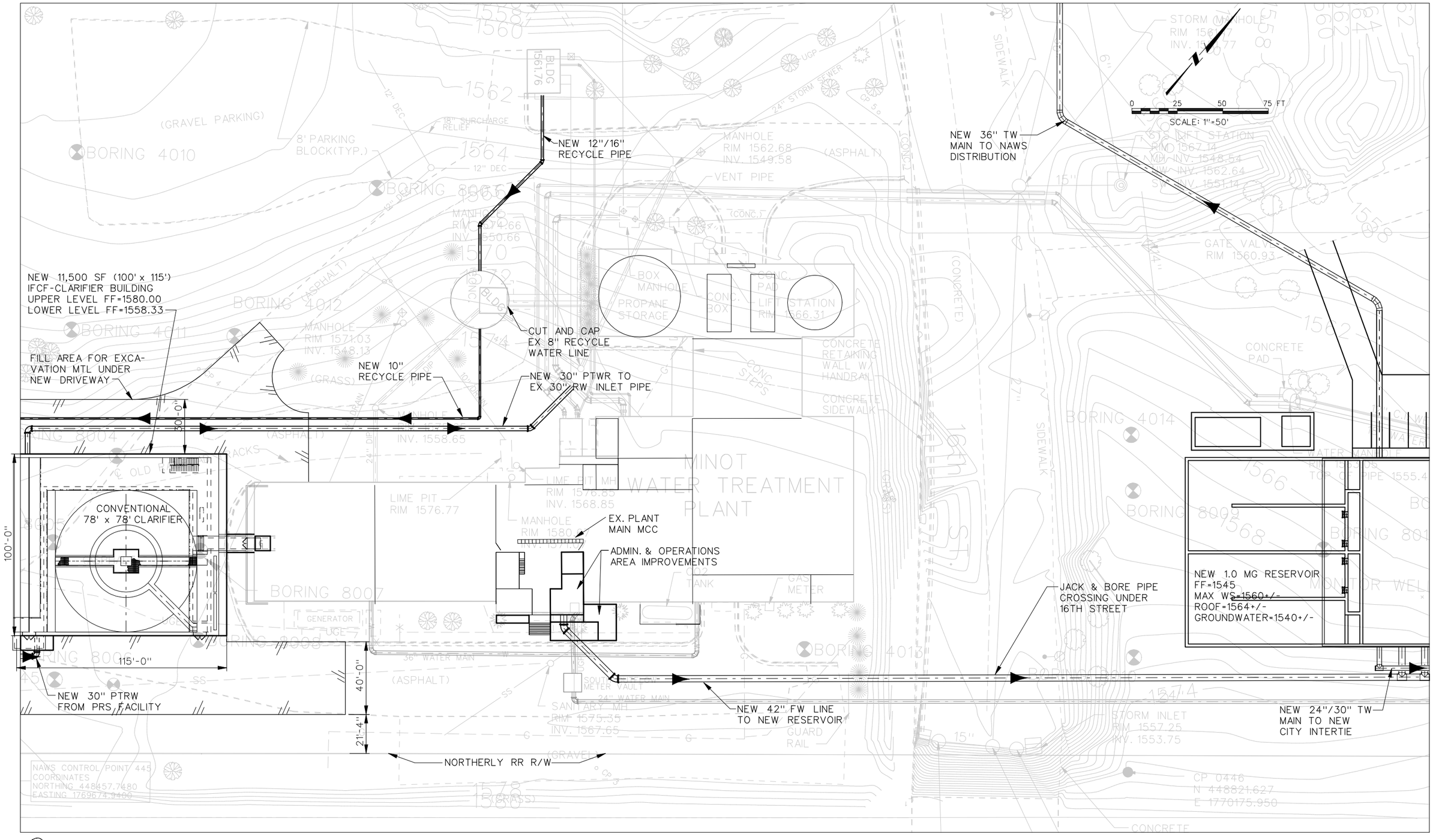

HOUSTON ENGINEERING, INC.

MWH

MINOT WTP IMPROVEMENTS PROJECT
NEW IFCF & CLARIFIER BUILDING
ALTERNATIVE 2 - SITE PLAN
Figure 4-9

Photo 4-1 - Raw Well Water Piping

The influent piping system to each of the existing clarifiers currently have a relatively new magnetic flow meter. (See Figure 4-1). A new magnetic flow meter will need to be installed on the 24-inch cross-over line which currently connects the outlets from the aeration basins. This will provide measurement and control of the NAWS water feeding the smaller Accelator clarifier. Also, new electrical actuators will be added to the butterfly valves which will be used in combination with the flow meters to regulate flow to the existing clarifiers.

4.4.3 Demolish Existing Aeration Systems

Because groundwater will only be used as a backup/emergency water source once the Lake Sakakawea water is delivered to the plant, the existing aerators (Photo 4-2) can be removed. Aeration of the Lake Sakakawea surface water supply is not required. Water flow into the existing clarifiers would still enter the aeration basins for distribution to either 1 or 2 of the existing clarifiers.

Under an emergency scenario, backup groundwater supply would only be for short periods of time. Non-aerated groundwater from the Sundre Wellfield could be safely treated for use during these periods.

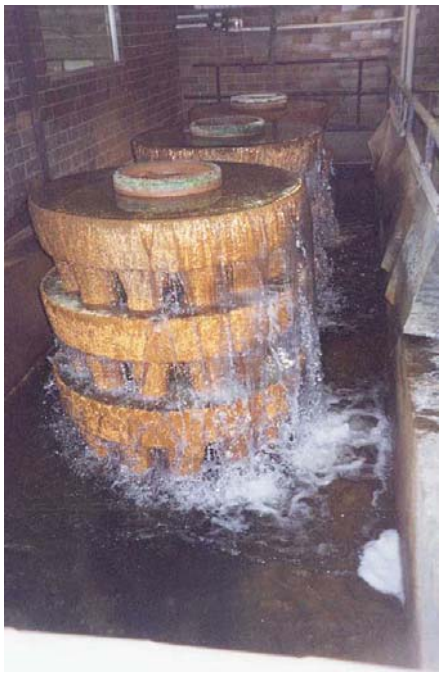

Photo 4-2 - Tray Aerator

4.5 CHEMICAL FEED SYSTEMS

4.5.1 Description

Significant changes and simplifications to the existing chemical storage and feed systems are recommended to effectively meet the NAWS requirements for treating the Lake Sakakawea supply. These chemical feed systems and the associated recommendations are provided in the following paragraphs.

A summary of the chemicals to be utilized as part of the Minot WTP Improvements Project is presented in Table 4-2. The table provides information on the anticipated treatment objective, chemical injection location, and dosage ranges for each of the process chemicals. Under current pretreatment planning, it is anticipated that a chloramine residual between 3 to 4 mg/l will enter the Minot WTP with the new NAWS Lake Sakakawea supply.

TABLE 4-2

MINOT WTP IMPROVEMENTS PROJECT
TREATMENT CHEMICAL SUMMARY

Chemical (Concentration / State)	Treatment Provided	Injection Point	Min dose mg/l	Avg dose mg/l	Max dose mg/l
Aluminum Sulfate / DADMAC Polymer Blend (100% Proprietary Liquid)	Coagulation	IFCF 30" RW Pipe, Flash Mix Zone	3	5	7
Anionic/Nonionic Polymer (100% Proprietary Liquid)	Coagulation Aid	IFCF 30" RW Pipe, Flash Mix Zone; Clarifier Inlet Zone	0.05	0.10	0.2
Quick Lime (~85% as CaO dry)*	Softening and pH Adjustment	Inlet Pipe to New Clarifier; Inlet Zone on Existing Clarifiers	110	130	150
Carbon Dioxide (~100% / Liquid to Gas)	pH Adjustment	Inlet Pipes to Recarbonation Basins	30	35	45
Tetra-Sodium Pyrophosphate (~69% as PO_4 / Dry)	Sequestering Agent	Effluent Launder on Clarifiers (Pipe Inlet to Recarbonation Basins)	1.0 (1.4)	1.5 (2.2)	3.0 (4.4)
Sodium Hypochlorite (~13% NaOCl / Liquid)	Distribution Residual (Boost Only)	Filter Influent Channels or Exist. Clearwell Influent	TBD	TBD	TBD
Ammonium Sulfate (~24% as NH_3 / Dry)	Distribution Residual (Boost Only)	Exist. Clearwell Effluent	TBD	TBD	TBD
Sodium Silicofluoride (1) (~74% as F / Dry)	Fluoride Addition	Exist. Clearwell Influent	0.5 (0.7)	1.0 (1.4)	2.0 (2.7)
Reducing Agent for Chloramines TBD (2)	Reduce Chloramines	TBD	TBD	TBD	TBD

TBD = To Be Determined, Boost on hypochlorite and ammonia at new reservoir / high service PS will depend upon total chlorine residual entering plant from NAWS.

* = Concentration expressed as pebble lime in silo: 1mg pebble = 0.85 mg CaO = 1.1 mg $Ca(OH)_2$

(values in parenthesis represent mg of bulk chemical / l water required)

(1.) Plant currently adds ~1.9 mg/l to achieve 1.4 mg/l as Fl residual. Lake Sakakawea background conc. of 0.5 mg/l fluoride should reduce chemical addition to half current level.

(2.) UV Irradiation at new high service pump station expected to reduce chloramine residual by ~ 20% +/-. Other reducing agents may be necessary to reduce excessive chloramine residuals. Current total chlorine residual on order of 2.0 to 2.5 mg/l entering distribution system.

4.5.2 Primary Coagulant and Coagulant Aid

With the introduction of the new NAWS pretreated water supply, it is necessary to design a new central chemical feed application point for coagulant and coagulant aid for the entire plant. The new IFCF and flash mix facility will provide this capability.

A primary coagulant application point will be provided as part of the IFCF piping system. Primary coagulant will be based upon selection of either a liquid alum or ferric based product. This application point on the IFCF piping will be used instead of the current application points local to each clarifier. This single new application point will provide the best dosage control and enhance the coagulation process. The most effective type of primary coagulant for treating Lake Sakakawea water may be different than the proprietary alum-polymer blend chemical currently used. Based upon operational experience at the Dickinson WTP, it is estimated that the primary coagulant dose will be in the range of 4 to 7 mg/l. Assuming the use of a metallic salt based coagulant (ferric chloride or aluminum sulfate) at a 5 mg/l dose, primary coagulant consumption would be an estimated 85 gal/day at a plant flow of 10.5 mgd or about 210 gal/day at a plant flow of 26 mgd. A 3,000 gallon bulk tank is recommended for the primary coagulant which would provide 35 days storage at the future average flow of 10.5 mgd and approximately 14 days storage at the future peak flow of 26 mgd. Due to the significant volume of primary coagulant required, the bulk storage tank system is recommended over the portable "tote" tank (200-300 gallon) systems.

The plant currently utilizes an anionic / nonionic proprietary polymer as a coagulant aid. It is anticipated that a similar liquid emulsion polymer will be utilized on the new Lake Sakakawea supply. Dosages are anticipated to range between 0.05 mg/l to 0.2 mg/l with 0.10 mg/l being an average dose. Effect of the polymer coagulant aid on the floc carry-over from the clarifiers and on the performance of the newly rebuilt filters should be carefully evaluated once the Lake Sakakawea water is treated at the plant.

4.5.3 Lime Softening and Clarification

The Lake Sakakawea water supply was evaluated and shown to have less than one half the total hardness as the Minot groundwater supply. The water quality of Lake Sakakawea is relatively constant and will provide a water supply that should allow for consistent and cost-effective treatment. While the magnesium to calcium ratio is slightly higher than the current well water supply, excess lime softening followed by polyphosphate addition and recarbonation should provide a better quality finish water at a lower chemical cost per unit of water supplied. Average lime dosage is expected to drop from current levels of 430 mg/l to about 130 mg/l for treating Lake Sakakawea water. This represents a significant reduction in lime use and a significant reduction in the volume of lime sludge which will be generated.

Photo 4-3 - Existing Lime Silo

Existing Lime Silo. Lime is currently delivered to the Minot WTP by truck in 25-ton loads. The existing lime silo is a 100-ton stainless steel unit housed inside the main plant building. (Photo 4-3.) There are no vibrators

Photo 4-4 – Existing Lime Hoppers

or air blowers for movement of lime to the slakers. There is no dust collection system or filters. Flow to the slakers is controlled by knife gates. Lime discharge is by gravity to the slakers.

The anticipated lime required for treating Lake Sakakawea water is approximately 6 tons per day at an average day flow of 10.5 mgd, and 15 tons per day at a peak day flow of 26 mgd. Under these conditions, a full 100-ton lime storage silo could provide about 16 days and 6.5 days of storage, respectively. As a comparison, the 100-ton silo can only provide about 5 days storage of lime for treating the current groundwater supplies at a flow of 10.5 mgd.

The existing silo is split into two compartments each of 50-ton capacity (Photo 4-4). The silo and feed chutes are in good condition and are more than adequate size to handle the new lime usage needs. The lime delivery system of the augur, bucket elevator and gravity flow chutes are in need of replacement. Replacement of this existing delivery system with an equivalent mechanical system or possibly utilizing a new "no moving part" pneumatic delivery systems will be investigated during design. These new lime delivery systems utilize a pneumatic system located on the delivery vehicle to transfer the lime from the truck to the silo. The availability of such pneumatic delivery trucks will be investigated during design to evaluate cost effectiveness of such deliveries as compared to the City's current delivery system.

If it is desired to construct a new lime silo, then sizing the silo for a 60-ton storage capacity would be sufficient. This size would be capable of receiving two successive truck loads (i.e., 50 tons) and also sufficient to have enough lime in the silo to cover a long 4 day weekend at peak usage periods (i.e. 15 tons/day).

Existing Wallace & Tiernan (W&T) Slakers. Table 4-3 presents calculated lime consumption rates for the new Lake Sakakawea water supply. Each of the current W&T model A758C slakers are paste-style slakers with a 2,000 lb/hr quick lime slaking capacity (Photo 4-5). These slakers are relatively new and were installed in 2002. Control of the lime slaker is accomplished via pH monitoring at the center feed-well of the duty clarifier. The slaker is automatically

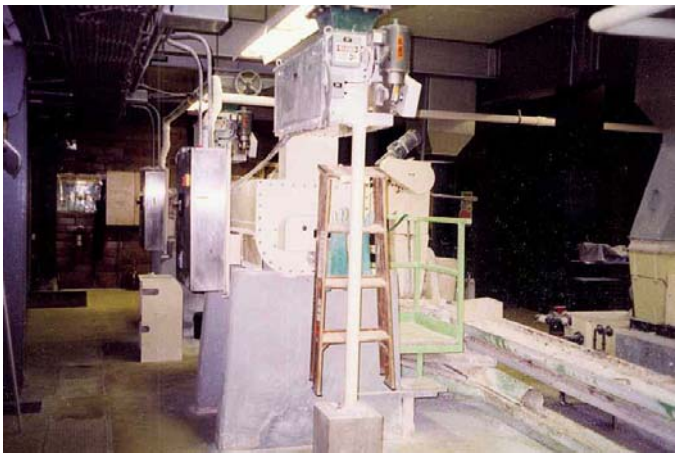

Photo 4-5 – W&T Lime Slaker

paced to maintain a target pH of about 11.1 to 11.2. If the pH meter requires maintenance or service, then the Operators can use the existing influent raw water flow meter to flow pace the duty clarifier, using a setpoint lime dosage. There is currently a Rosemont magnetic flow meter on the raw water feed to each clarifier.

Each slaker is equipped with a 35:1 gear reducing unit in the gravimetric weighbelt feeder, which dictates the upper capacity of 2,000 lbs/hr. Wallace & Tiernan technical support indicated that the slakers are supposedly to be able to function at a 20:1 turndown ratio. If true, this means the 2,000 lb/hr slakers should be able to reliably run at 100 lbs/hr. However, manufacturer's turndown expectations are often optimistic. Our design approach assumes the current slakers can produce a reliable turndown ratio of 10:1. This would correlate to the current 2,000 lb/hr slakers being able to run at 200 lbs/hr. Theoretically, this meets the minimum lime needs as presented in Table 4-3.

TABLE 4-3

MINOT WTP IMPROVEMENTS PROJECT
LIME CONSUMPTION AT VARIOUS FLOW RATES AND DOSAGE RATES

Plant Flow Rate	Lime Usage in Tons/Day & (lbs/hr)	
	110 mg/l	150 mg/l
5.0 mgd	2.3 (190)	3.1 (260)
6.3 mgd	2.9 (240)	4.0 (330)
10.5 mgd	4.8 (400)	6.6 (550)
18 mgd	8.3 (690)	11.3 (940)
26 mgd	11.9 (1,000)	16.3 (1,350)

Current experience by the Minot WTP Operations staff indicates these slakers are capable of running trouble free between about 500 lbs/hr and 1,500 lbs/hr. The staff has never had the opportunity to run the slakers down at levels around 200 to 300 lbs/hr, as their current lime demands are significantly higher. In July, 2005, the staff performed a half-day test on one of the W&T slakers to verify if it could reliably operate at 200 lbs/hr. Initial startup of this slaker in a cold state indicated that a higher feed rate would be required for a short period to get the tank water temperature high enough to support the slaking reaction process. Once the slaking process was initiated, the slaker was successfully ramped down to a rate of 200 lbs/hr and ran trouble free for the duration of the test (about 3 to 4 hours).

W&T technical support also mentioned that for lower feed rate applications, a simple torque valve adjustment may be necessary inside the unit to adjust lime paste thickness. Also, the 35:1 gear reducing unit can be easily replaced with a 66:1 gear reducing unit resulting in a reduction in slaker capacity from 2,000 lbs/hr to 1,000 lbs/hr, and a theoretical minimum capacity of 100 lbs/hr (assuming a 10:1 turndown).

Given that the slakers are relatively new and that this low-end test was successful, the current W&T slakers should be able to properly serve the expanded Minot facility in a true duty-standby mode.

Existing Lime Slurry Feed Troughs. The existing open-channel lime slurry feed system consists of carbon steel troughs which carry the hydrated lime slurry by gravity to the center feed wells on the two existing clarifiers. These troughs could be replaced with a new 3-inch diameter closed-loop pumped recirculation system to feed the lime slurry in a closed pipe to all three clarifiers. A modulating pinch valve would be installed very near the application point on each clarifier to control the amount of lime being fed from the closed loop system to the respective clarifier. Control of the pinch valve would be by means of a feedback signal originating from a pH meter mounted in the center feedwell of the respective clarifier.

A closed loop system often works best when the slaked lime has an opportunity to fully hydrate in the slurry / stabilization tank prior to being pumped. W&T recommends that a slurry / stabilization tank provide 15 minutes of detention time for complete hydration to occur. With an anticipated transport water flow of about 25 gpm, this stabilization tank would need to be sized at approximately 400 gallons. Final design will investigate how to incorporate a new 400 gallon stabilization tank with the existing two slakers and a new recirculation pumped system.

Potential Cost Savings in Utilizing Existing Silo and Slakers. Current budget prices from the manufacturer for new slakers together with a new conveyor system and one (1) new 60-ton silo is estimated to cost about $0.9 million in 2005 dollars. This does not include the cost of the building structures to house the silo and slaker equipment. Thus, overall cost savings by utilizing the existing lime silo and slakers is projected to be in the range of $1.2 to $1.5 million. Given the relatively good condition of the existing lime silo, hoppers, and two W&T slakers, it is recommended that these components continue to be utilized for treatment of the new Lake Sakakawea water.

4.5.4 Tetra Sodium Pyrophosphate

As currently practiced, a polyphosphate sequestering agent will be added to the clarified water, prior to CO_2 addition. This is necessary to stabilize the ionic equilibrium and minimize the adsorption of carbonates on the filter media and underdrains. The current average dosage of 1.5 to 2.0 mg/l is not anticipated to change significantly with the use of Lake Sakakawea water. The Dickinson WTP is currently dosing approximately 1.5 mg/l of polyphosphate in the effluent launders of their clarifiers. This operation has experienced good results on filter performance and the stability of the finished water. At a 10.5 mgd average treatment flow and assuming a dose of 1.5 mg/l, the new clarifier process train will require about 130 lbs/day of active chemical or about 190 lbs/day of dry tetra sodium pyrophosphate (at 70% concentration). Assuming delivery of the chemical in 50 lb bags, this usage rate would require the feeding of about four (4) bags of dry chemical per day. Thus, assuming 30 days of storage of dry chemical, the polyphosphate dry feed storage will be sized to hold approximately 120 bags at 50 lbs per bag.

4.5.5 Carbon Dioxide / Recarbonation

Prior to filtration, carbon dioxide (CO_2) is added to the softened water to lower the pH from approximately 11.1 to the 9.0 to 9.3 range, as required by the North Dakota Department of Health (DOH). Current CO_2 dosages on the Sundre and Minot aquifer water average about 45 mg/l to achieve this pH goal. The MWH water chemistry model estimates that the CO_2 dose

required on Lake Sakakawea water will average about 35 mg/l to achieve the same pH goal of 9.0 to 9.3. The plant personnel at the Dickinson WTP reported current CO_2 usage at approximately 35 mg/l to reduce the clarified water pH from approximately 11.0 to 9.1.

For the new softening clarifier and recarbonation train, it is recommended that a new sidestream CO_2 dissolution cabinet system (manufactured by Tomco, or equal) be installed in the new building. A sidestream system injects CO_2 gas into a sidestream of utility water creating a solution of carbonic acid (H2CO3) This acid solution is then injected into the mainstream flow as near to the clarifier effluent launder as possible. Provided adequate mixing occurs, the reaction time for the carbonic acid to lower the main flow pH is reported to be quite rapid, (less than 20 seconds hydraulic detention time). For both of the existing recarbonation basins, it is recommended that the current gas diffusers be removed and replaced with the same CO_2 sidestream injection system for better efficiency and lower maintenance requirements.

The CO_2 gas supply to these new units will utilize the existing CO_2 bulk storage tank, at it's current location. The capacity of the existing CO_2 storage tank is more than adequate for both the Phase 2 maximum flow of 18 mgd and the Phase 3 maximum flow of 26 mgd.

4.5.6 Chlorination System

The existing chlorine gas feed system is satisfactory until the Lake Sakakawea water becomes the primary supply as part of the Phase 2 Improvements Project. During the Phase 2 project, it is recommended that the existing chlorine gas storage and feed system be removed and replaced with a smaller hypochlorite system, using either delivered liquid sodium hypochlorite or dry calcium hypochlorite. Due to the chlorine and ammonia addition at the NAWS booster pump station, the oxidant demand for free chlorine at the Minot WTP is expected to be very low. Therefore, there is no need to store one-ton chlorine gas cylinders at the plant. This approach will eliminate the need and cost to add a chlorine gas emergency containment system, including a chlorine gas scrubber, at the plant.

4.5.7 Polyphosphate; Sodium Silicofluoride; Ammonium Sulfate

There are currently two polyphosphate, two fluoride and one ammonium sulfate volumetric dry feeders. These feeders have been in service for many years; although they still provide fairly reliable service. Replacement of the feeders would be of the same type and about the same capacity for these chemicals. (Although the dosages of sodium silicofluoride and ammonium sulfate are expected to be 50% or less of current levels, the rough doubling of plant capacity to the ultimate 26 mgd NAWS flow means that new feeder capacities would be nearly identical to the current feeders.) However, replacement of the feeders may provide greater reliability and confidence in service life. Replacement of these feeders is a low priority item relative to other needed plant improvements plant. A new polyphosphate feeder(s) will be required for the new clarifier(s).

It is anticipated that little or no ammonium sulfate will be required to be added at the existing clearwell where it is currently added to the treated groundwater. It is expected that a significant chloramine residual will be entering the plant from the NAWS supply and that no additional ammonium sulfate will needed. However, it is possible that a small dosage boost in both

chlorine and ammonia may be required at the plant, and therefore it is recommended that the ammonium sulfate hopper and feeder remain in their present location in the lime slaker room.

4.5.8 Potassium Permanganate and Sodium Aluminate

Removal of these two chemical feed systems from the facility is recommended because they are not anticipated to be necessary for treatment of Lake Sakakawea water.

4.6 NEW SOFTENING / CLARIFIER FACILITY

4.6.1 Background on Lime Softening Process

The excess lime softening process is currently used to raise the raw water pH to the 11.1 to 11.3 range to remove calcium and magnesium hardness from the groundwater supply. With virtually no turbidity or suspended solids, the average hardness of the current blended groundwater supplies typically ranges from 450 to 550 mg/l as $CaCO_3$. Records indicate that hardness can vary significantly (up to 1,000 mg/l as $CaCO_3$) depending upon the individual well source in operation and the time of year. However, with lime dosages which average about 430 mg/l, the Minot WTP has been capable of providing a finished water supply with a hardness in the range of 100 to 130 mg/l as $CaCO_3$, averaging about 110 mg/l as $CaCO_3$. Softening domestic water below this level is typically unnecessary to satisfy user demand and expectation.

Photo 4-6 – 6 mgd low-rate Accelator Softening Clarifier

Photo 4-7 – 12 mgd low-rate Walker Softening Clarifier

The Minot WTP has two independent lime softening units. These include the Infilco Accelator installed in 1951 and rated at 6 mgd (Photo 4-6) and the Walker Process unit installed in 1962 and rated at 12 mgd (Photo 4-7).

To meet the expansion required by the NAWS project to achieve 26 mgd peak day capacity, it will be necessary to add a third softening clarifier. This clarifier will be designed to treat a peak flow of 10 mgd, which will allow both of the existing clarifiers to be derated by 1 mgd each. Derating the existing clarifiers will provide benefits of allowing for increased filtration rates on the existing filters while maintaining filter efficiency.

There are a number of reactor upflow clarifier designs that have application in water softening. These include units similar to the existing low-rate conventional softening clarifiers, and newer high-rate solids-recirculation softening clarifiers. This section will refer to the existing and new clarifier options at the Minot WTP as follows:

- Existing 6 mgd IDI Accelator clarifier referred to as: Accelator
- Existing 12 mgd Walker Process clarifier referred to as: Walker
- Alternative new low-rate Conventional clarifier referred to as: Conventional
- Alternative new high-rate IDI DensaDeg clarifier referred to as: DensaDeg

4.6.2 Existing Recarbonation Systems

The existing recarbonation system consists of two basins and two carbon dioxide (CO_2) feeders. The existing two recarbonation basins are each sized to meet the design hydraulic capacity of the respective clarifier. The smaller Accelator clarifier has a downstream 72,000-gallon recarbonation channel with about 17 minutes theoretical detention time. The larger Walker clarifier has a downstream 123,000 gallon recarbonation basin with about 15 minutes detention time. This detention time requirement of 15 minutes is based on old technology for carbon dioxide generation and injection that are no longer utilized at the Minot WTP. The existing two carbon dioxide feed systems convert liquid carbon dioxide to gaseous carbon dioxide that is then injected into a sidestream of carrier water which is subsequently introduced into the bottom of the recarbonation basins by a diffuser at the beginning of the respective recarbonation basins. Carbon dioxide is used to decrease the pH to a range of 9.0 to 9.3 (North Dakota DOH requirement) that stabilizes the water from the softening process and reduces the corrosion potential.

Some post-precipitation of calcium carbonate will occur as a result of recarbonation. This material will typically settle in the recarbonation chamber and will need to be removed about once every one to two years. The current dosage of carbon dioxide averages about 45 mg/l. Due to lower total alkalinity levels, the carbon dioxide dosage anticipated for the new Lake Sakakawea supply to reach the same target pH is estimated to be 35 mg/l.

Typically CO_2 gas transfer efficiency will range between 85 to 90 percent. Gas transfer efficiencies are seldom an issue unless very low pH levels are required. It is planned that the existing recarbonation basins will continue to provide dedicated service to the existing clarifiers and no structural modifications are proposed at this time. The existing carbon dioxide storage tank (Photo 4-8) is relatively new and is of adequate size to meet total CO_2 demand.

Photo 4-8 - Carbon Dioxide Storage

4.6.3 New Recarbonation System

The new recarbonation sidestream injection system associated with the new softening clarifier will be designed for a carbonic acid reaction time of 10 to 20 seconds, prior to measuring pH. The subsequent recarbonation basin will be designed for a theoretical detention time of 4 to 5 minutes. A new open-channel will be constructed to feed softened and recarbonated water from the new recarbonation basin to the existing filter influent channel. A direct connection to the channel is planned on the west side of the filters where the new clarifier would be located.

As a reference, the Dickinson WTP recarbonation system also utilizes a side-stream CO_2 injection system followed by a small recarbonation basin. The Dickinson recarbonation basin has a theoretical detention time of approximately 5 minutes at peak flow with the actual detention time being significantly less. According to plant personnel, the basin accumulates approximately 1 to 2 inches of solids every year. They reported that most of the solids deposition is due to upsets in the clarifier process caused by their daily stopping and starting of the plant process (the plant is operated only 8 to 10 hours per day). The Dickinson staff clean out the accumulated solids from the floor of the recarbonation basin every one to two years.

The suggested layout of the recarbonation basin is shown in the layout alternatives of Figure 4-10 and Figure 4-11. The floor of the new recarbonation basin will be sloped at approximately 2 to 4 percent toward a small sump located near the end of the basin. The sump will have a 6-inch drain pipe with a plug valve to allow periodic flushing of solids to the existing equalization basin.

4.6.4 New 10 mgd Softening-Clarifier

This section develops and defines the recommended approach for the new softening clarifier and recarbonation system process train. Ancillary facilities associated with the new clarifier facility, include the Influent Flow Control facilities, lime handling and conveyance facilities, and other new chemical feed facilities. Specific objectives of this preliminary design analysis of the new clarifier included:

- Finalize the process capacity requirements and design criteria for the new softening clarifier and recarbonation system to meet the ultimate NAWS project capacity requirements.
- Develop the best preliminary layout for each clarifier alternative (low-rate conventional unit and high-rate DensaDeg unit) including its ancillary components in the new IFCF and Clarifier building. From these layouts, the Engineer and Owner need to select the best alternative for final design development.
- Develop preliminary layout and space requirements for chemical feed systems to be located in the new IFCF and new clarifier building.

The proposed modifications to the existing filters will permit higher filter surface loading rates (SLR) on the existing filters. Higher SLRs will increase the current maximum filtration capacity of the 12 filters from 18 mgd to the 26 mgd ultimate NAWS capacity requirement. However, to optimize the filtration efficiency at these higher SLRs, it is necessary to reduce the maximum

Plot Date: 10-SEP-2007 14:47

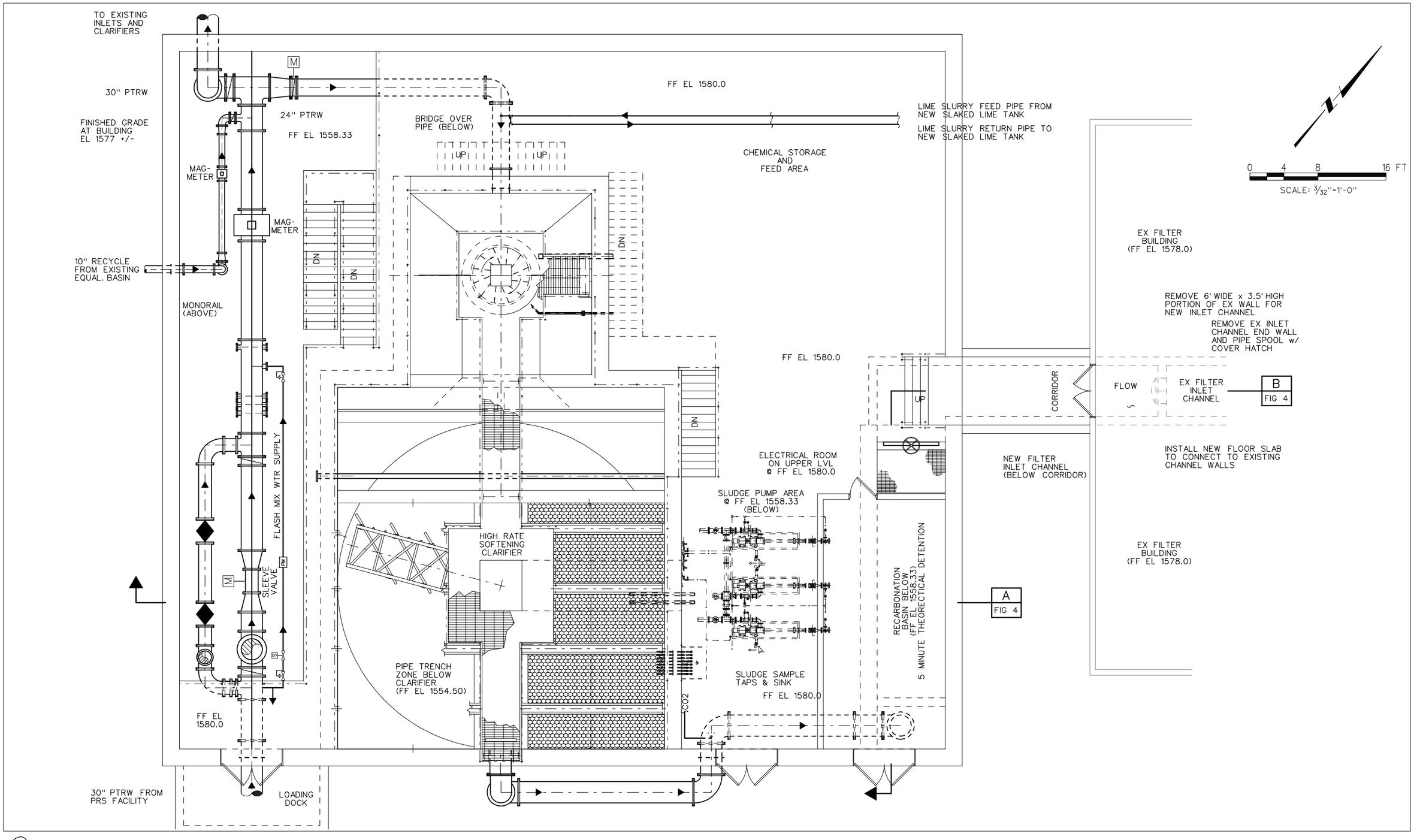

HOUSTON ENGINEERING, INC.

MWH

MINOT WTP IMPROVEMENTS PROJECT
NEW IFCF & CLARIFIER BUILDING
ALTERNATIVE 1 - PLAN
Figure 4-10

Plot Date: 10-SEP-2007 14:47

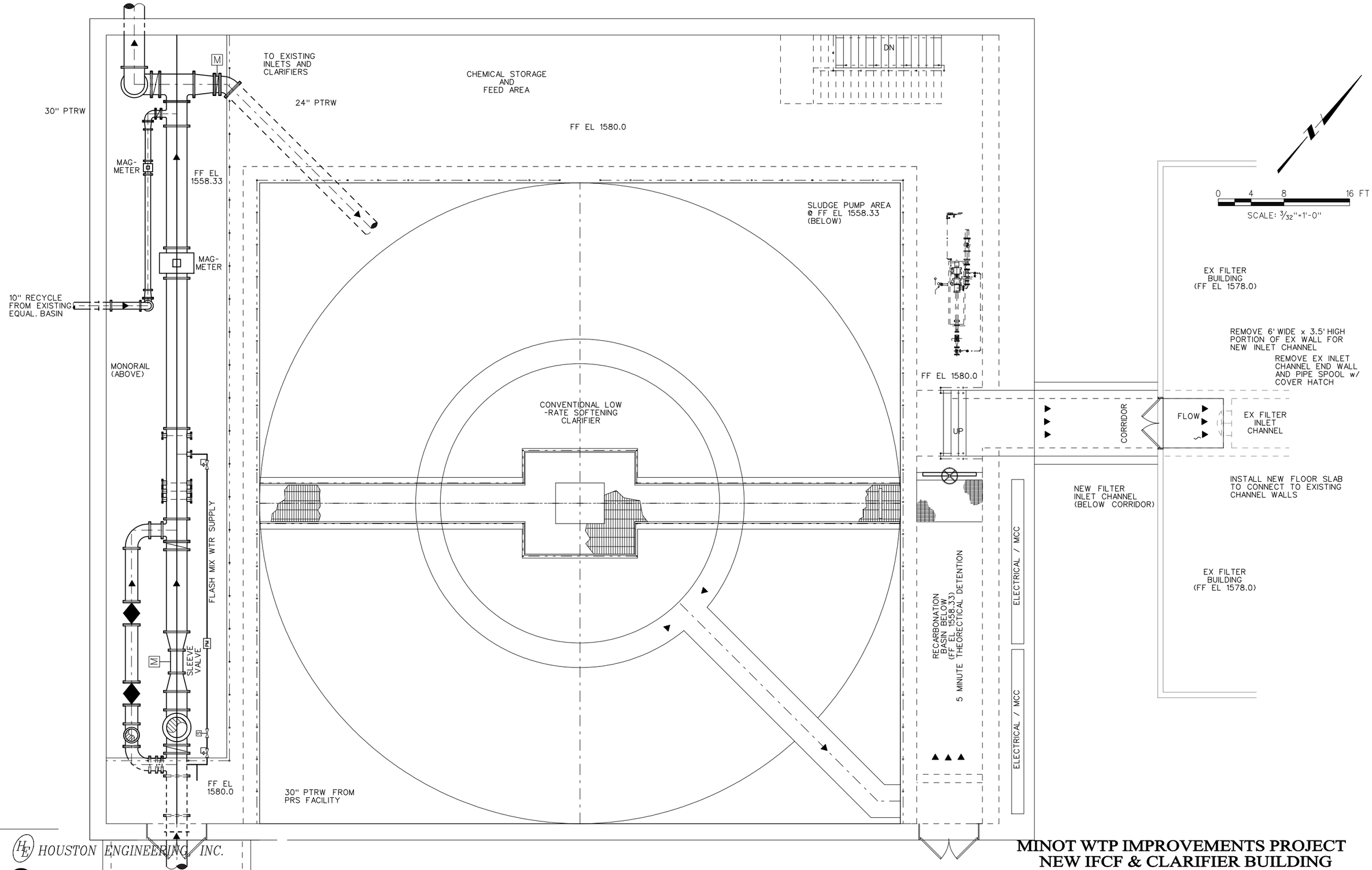

HOUSTON ENGINEERING, INC.

MWH

MINOT WTP IMPROVEMENTS PROJECT
NEW IFCF & CLARIFIER BUILDING
ALTERNATIVE 2 - PLAN
Figure 4-11

hydraulic capacity of the existing clarifiers to reduce the potential for floc carry-over from the clarifiers to the filters. This requires that the new clarifier rated capacity be sized to achieve the ultimate 26 mgd treatment requirement under the worst case summer time design conditions (early summer low water temp of ~ 16°C to 20°C at the Minot WTP.) Under these conditions, the new summer peak flow capacity rating for each of the existing and new clarifiers will be as follows:

- Accelator unit to be derated from current capacity of 6 mgd to: 5 mgd
  Clarifier rise zone SLR to be derated from 1.60 gpm/sf to: 1.33 gpm/sf

- Walker unit to be derated from current capacity of 12 mgd to: 11 mgd
  Clarifier rise zone SLR to be derated from 1.38 gpm/sf to: 1.27 gpm/sf

- New low-rate Conventional option designed treatment capacity of: 10 mgd
  Clarifier rise zone SLR designed to: 1.3 gpm/sf

- New high-rate DensaDeg option designed treatment capacity of: 10 mgd
  Clarifier tube settler zone SLR design to: 7.4 gpm/sf

The performance criteria for operating softening clarifiers requires derating for winter-time cold water temperatures. The maximum flow rate and resulting SLR for each existing clarifier and new clarifier option are derated below to 75% of the summer flow rates. During cold water season, it is expected that no more than two clarifiers need to be operated at any given time. Under these conditions, the new winter capacity rating for each of the clarifiers will be as follows:

- Accelator unit winter max. capacity of 75% of 5 mgd: 3.7 mgd
  Clarifier rise zone SLR designed to: 1.0 gpm/sf

- Walker unit winter max. capacity of 75% of 11 mgd:: 8.3 mgd
  Clarifier rise zone SLR designed to: 0.95 gpm/sf

- New low-rate conventional winter max. capacity of 75% of 10 mgd 7.5 mgd
  Clarifier rise zone SLR designed to: 1.0 gpm/sf

- New high-rate DensaDeg winter max. capacity of 75% of 10 mgd: 7.5 mgd
  Clarifier tube settler zone SLR design of: 5.6 gpm/sf

The above indicates the winter cold water rise zone SLRs will be near 1.0 gpm/sf on the existing clarifiers and for the new low-rate conventional clarifier option, and about 5.5 gpm/sf for the new high-rate DensaDeg option.

For the high-rate clarifiers, higher tube settler loading rates up to 7.5 gpm/ ft^2 have been demonstrated and are achievable. Actual loading rates at current municipal water plant installations vary from about 4.5 gpm/ft^2 to 8 gpm/ft^2. This loading rate is significantly higher than that for existing conventional clarifiers which typically range from about 1.0 to 1.5 gpm/ft^2.

New Clarifier Unit Requirements. Whether a low-rate or high-rate clarifier technology is selected, prior discussions with the NAWS project team and City of Minot personnel indicated that it was desirable to add only one, new 10-mgd clarifier unit rather than two new 5-mgd capacity units. Construction of only one new unit will provide adequate capacity while minimizing new site space requirements and capital costs. Also, providing only one new unit will meet operational flexibility (i.e., turndown) while minimizing starting and stopping of the clarifiers. However, it should be noted that high-rate solids contact clarifiers can require a significant amount of time to establish a proper sludge blanket and reach an equilibrium condition after startup.)

Figures 4-8 and 4-9 provide a preliminary site layout showing how each of the alternatives (high-rate clarifier option and the low-rate clarifier option, respectively) for the IFCF & Clarifier building would be situated on the existing site. Proposed major yard piping and new driveway layouts are also shown.

Comparison of a Conventional Low-Rate Clarifier to a High-Rate Clarifier. Figures 4-10 and 4-11 provide a preliminary layout for a new 10 mgd high-rate softening clarifier and a low-rate conventional softening clarifier, respectively. These preliminary drawings show the best current layout of the IFCF and Clarifier building, located off of the west end of the existing filter complex. The layouts include the proposed location of the main ancillary facilities (i.e., IFC facilities, chemical feed facilities, recarbonation basin, and new electrical room). Use of a conventional low-rate solids contact clarifier provides a technology with the following advantages over high-rate softening clarifiers:

- Low-rate softening clarifiers (~ 1.0 to 1.5 gpm/ft^2 SLR) have a long history of success as a softening and clarification process for drinking water plants. Although there are significant number of installations of high-rate clarifiers in European municipalities, the DensaDeg high-rate technology has been installed for lime softening applications at only three other known drinking water plants in North America.
- Overall reliability of these low-rate units is higher as they are less susceptible to upset caused by changes to flow, water quality, or water temperature conditions as compared to high-rate clarifiers.
- Low-rate softening clarifiers have lower maintenance costs because there are no sludge recycle pumps to maintain and no settling tubes which will require cleaning every 4 to 6 months.
- Competitive bidding is possible with conventional low-rate clarifiers. There are no known competitors to the Infilco Degremont DensaDeg system whom can provide an “or-equal” system for competitive bidding.

Disadvantages of the use of a conventional low-rate clarifier as compared to a high-rate softening clarifiers include:

- The low-rate clarifier unit is estimated to have an overall cost, including the larger building requirements, of roughly $500,000 more than the high-rate DensaDeg Model 10 option. This higher cost is due mainly to an increased building area requirement of approximately 3,500 sq. feet more for a 10 mgd conventional clarifier unit as compared to the high-rate clarifier. This equates to an increase in building cost of about $525,000 assuming a building unit cost of $150/sq. ft. (A 78' x 78' IDI Accelator conventional clarifier is budget priced at about $100,000 less than the required model 10 IDI DensaDeg high-rate clarifier. However, neither of the budget estimates included the cost of the exterior concrete foundation walls. Thus, it is estimated that the combined clarifier and concrete foundation costs for these two options are nearly identical. Thus, the major cost difference between the two options is the extra 3,500 sq ft of building superstructure cost over the clarifiers).
- The smaller footprint of the high-rate clarifier alternative provides some additional room for vehicle and truck access around the west end of this new building, (see Figure 4-8.)
- Low-rate clarifiers possibly could require a slightly higher lime dosage as no recycle of lime sludge is provided to enhance efficiency of the softening process.

Given the above advantages and disadvantages, the City of Minot should carefully consider the tradeoffs in capital costs verses O&M issues in selection of the preferred treatment technology.

Conceptual Layout Alternatives for New Clarifier and Building. Figure 4-10 presents the new influent flow control piping, DensaDeg clarifier option, and recarbonation basin all primarily in a north-south flow configuration. Figure 4-11 presents the same basic facilities layout for a conventional low-rate clarifier option. Figure 4-12 presents section cuts through this DensaDeg clarifier layout option. Both building alternatives have similar finish floor elevations with the lower level floor at elevation of 1558.33 and the upper level floor at elevation 1580.0. The IFCF system discussed earlier has been combined into the new clarifier building because it eliminates the necessity for a separate building and/or large buried vault to house these components, and it centralizes the required new chemical feed systems and application points.

Clarifier Building Structural Underdrain System. For the new IFC & Clarifier building, the lower finish floor elevation is preliminarily set at elevation 1558.33. This elevation results from the hydraulic need to establish the upper finish floor at elevation 1580, as discussed previously. In addition, there may be an approximate 4 to 6 ft wide pipe trench intersecting the middle of the clarifier sludge hopper with a lower finish floor near elevation 1554.5. Recorded groundwater level from Piezometer No. 1 (located within the boundary of the new IFC & Clarifier recommended site) show that groundwater levels vary from elevation 1557.5 to 1559. These groundwater elevations will likely require a structure underdrain and dewatering system be installed underneath the new IFC & Clarifier building. Any water collected in this underdrain system would have to be pumped for treatment and/or discharge.

Plot Date: 10-SEP-2007 14:47

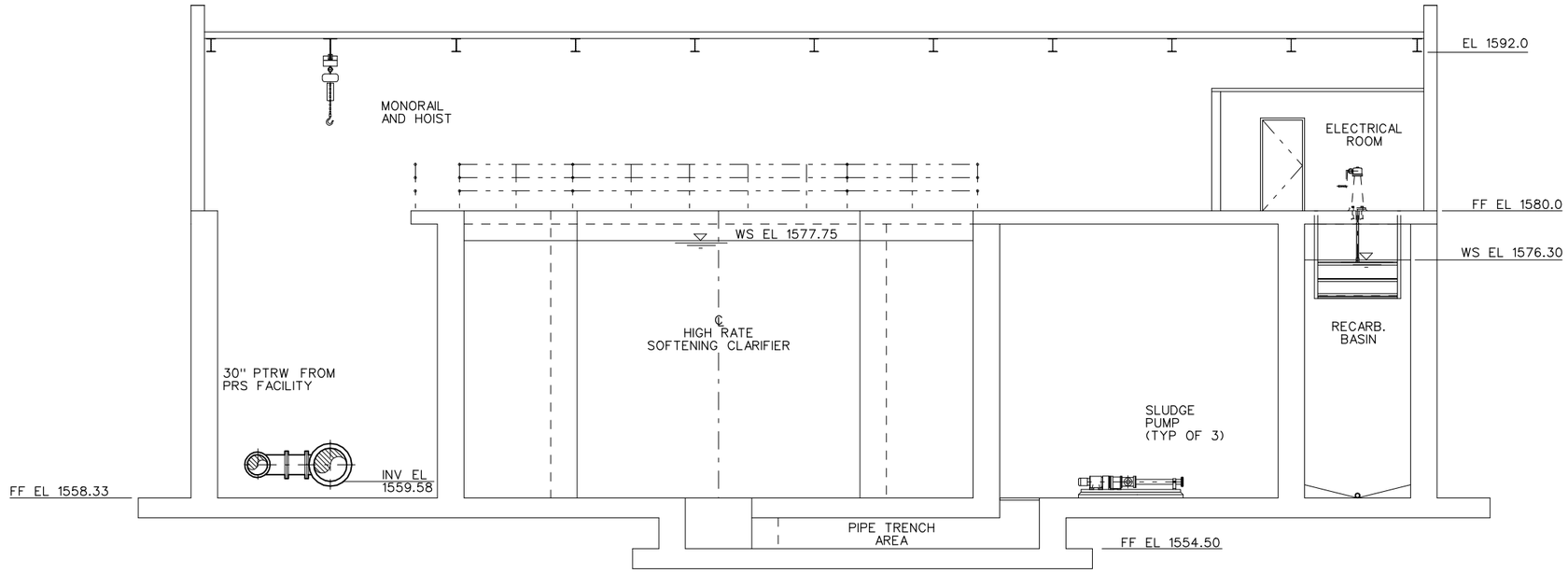

SECTION A
SCALE: 3/32"=1'-0"
FIG 3

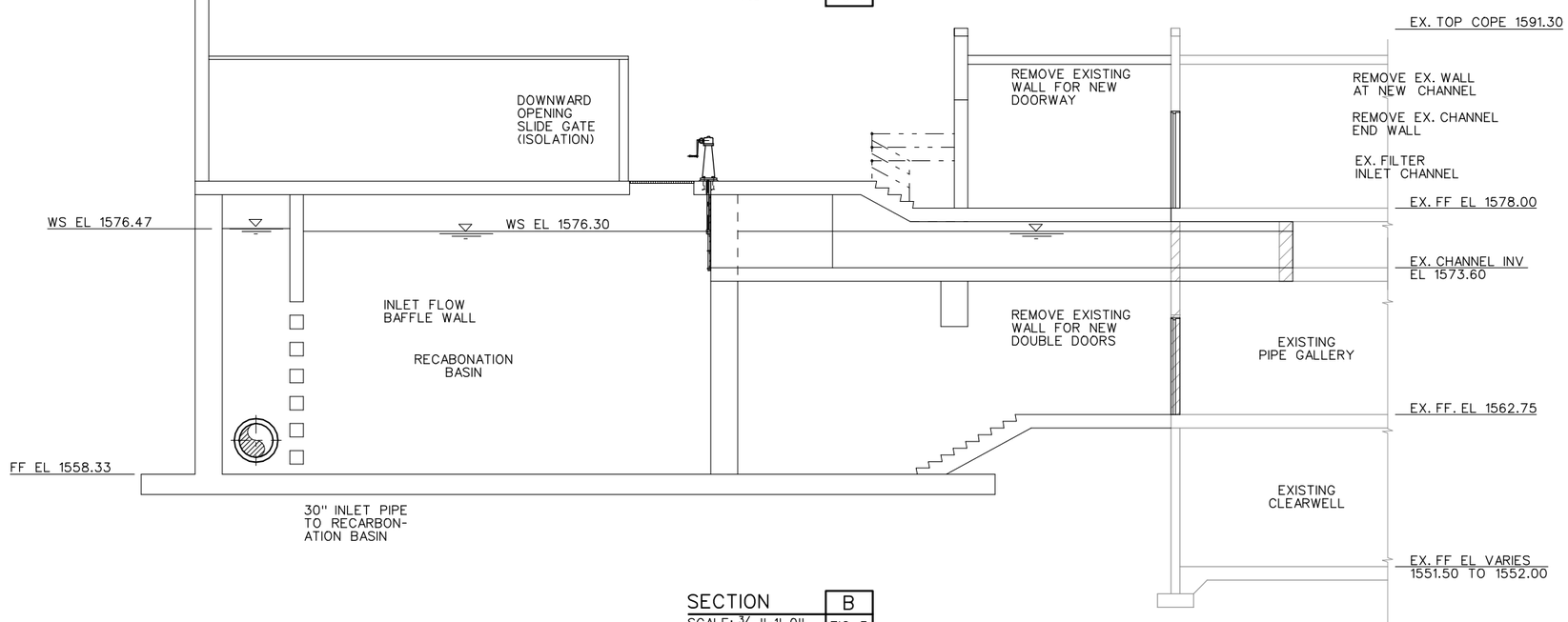

SECTION B
SCALE: 3/32"=1'-0"
FIG 3

HOUSTON ENGINEERING, INC.

MWH

MINOT WTP IMPROVEMENTS PROJECT
NEW IFCF & CLARIFIER BUILDING
ALTERNATIVE 1 - SECTIONS
Figure 4-12

4.7 FILTRATION AND FILTER BACKWASH SYSTEM UPGRADES

4.7.1 Existing Filter System Description

Filter Type and Media. Filtration is required to remove solid floc material carried over from the softening clarifiers. The plant presently contains 12 constant-level, rate-of-flow control shallow bed filters. Six of the filters were built with the original plant in 1952 and six more were added during the 1963 expansion. The individual filter surface area is approximately 360 square feet each. Plant drawings indicate the filters were designed to contain 17 inches of 0.9 to 1.2 mm anthracite over 8 inches of 0.45 to 0.55 mm sand with 18 inches of support gravel. Figure 4-13 presents a schematic cross-section of the existing filter design. A rate-of-flow controller controls flow through each filter while a level control in the filter influent channel is also used to maintain a constant level in the filter influent channel.

Backwash System. A single backwash pump and rotating arm, surface wash system (fed off the high pressure finished water service line) are used to clean the media. The backwash pump rate is nominally rated at 5,000 gpm (14.0 gpm/sf) (This flow rate is considered by plant staff to be the maximum output - 7/2005) This existing pump is over 50 years old and has served out its useful life. According to the staff, the pump has very leaky seals and they are afraid to do maintenance on the pump for fear of not being able to get it back in-service. Typically, backwash is initiated based on hours of service and not turbidity breakthrough or terminal headloss. Filter backwash typically lasts 7 to 10 minutes which includes approximately 3 minutes of surface wash. The total backwash volume ranges from approximately 35,000 to 50,000 gallons per backwash.

Filter Effluent and Hydraulics. All filtered water flows to the clearwell located directly below the filters. The plant does not have the capability to practice filter-to-waste during the maturation period of the filter run. The hydraulic configuration of the filters creates the potential for air-binding in the filter media and is supported by plant staff reports of air-binding at higher flow rates. Air binding can increase the rate of headloss development and shorten filter run lengths between backwashes, particularly when operated at rates above 2 gpm/sf.

4.7.2 Filter System Modifications and Recommendations

New Filter Loading Rate. The proposed design criteria for the new filter and backwash modifications are presented in Table 4-1, Design Criteria Summary. The Phase 1 design filtration rate at 18 mgd is 2.9 gpm/sf with all filters in service and 3.2 gpm/sf with one filter out of service. The proposed Phase 2 ultimate design filtration rate at 26 mgd is 4.2 gpm/sf with all 12 filters in service and 4.6 gpm/sf with one filter out of service. This filtration rate requires approval by the North Dakota DOH. However, this rate is a reasonably moderate filtration rate given current practice and well within accepted standards across the country.

New Dual Media and Underdrains. Table 4-1 lists the recommended characteristics of the proposed media as well as the new backwash rates. Providing new filter media and rebuilding the filter underdrain system is necessary to be able to effectively increase the filtration rate from 3.16 gpm/sf to 4.56 gpm/sf when plant capacity is increased from 18-mgd to 26-mgd (rate for one filter out-of-service.

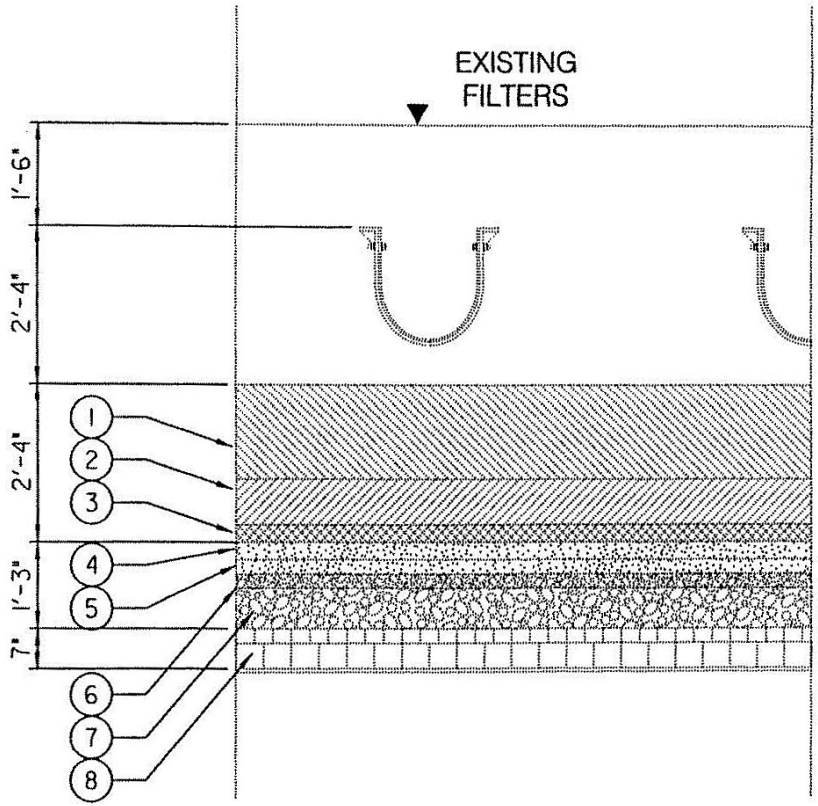

1. 17"ANTHRACITE E.S. = 0.9mm–1.2mm
2. 8"FILTER SAND E.S. = .45mm–.55mm
3. 3"TORPEDO SAND
4. 3" GRAVEL 1/4"–1/8"
5. 2 1/2" GRAVEL 1/2"–1/4"
6. 2 1/2" GRAVEL 3/4"–1/2"
7. 7" GRAVEL 1 1/2"–3/4"
8. INFILCO FREE-FLO III UNDERDRAINS (OLD FILTERS)
   LEOPOLD UNDERDRAIN BLOCKS (NEW FILTERS)

MINOT WTP IMPROVEMENTS PROJECT
EXISTING FILTER PROFILE
Figure 4-13

The new media is proposed to be 20-inches of 1.0 to 1.1 mm anthracite (uniformity coefficient <1.4) over 10-inches of 0.45 to 0.55 mm sand, (uniformity coefficient <1.4). The new anthracite and sand media will be sized to insure proper bed expansion of both layers of media occurs during backwash and minimum interface mixing occurs between the media after completion of backwashing. Proper backwash rate is determined by the water temperature (viscosity of fluid), and the physical characteristics of the media (i.e. effective size, specific gravity, and uniformity coefficient). (See Kawamura pg. 211 – 213).

The new underdrain system will allow an air-scour backwash sequence to be added to the filter wash process. This will help reduce the filter waste washwater volume sent to the minimally sized equalization basin. The FTW improvements will improve operations and finished water quality. To accommodate the deeper dual media and higher filtration rate, the existing filters would be retrofitted with low-profile plastic block "gravel-less" type underdrains. The existing gravel support media will be removed. This media and underdrain changes are necessary to assure 26 mgd of filter production capability without requiring construction of new filters.

New Backwash Pumping System. The existing backwash pump has reached the end of its useful life and should be replaced and a second backwash pump is required to provide the required redundancy. The recommended filter media will require higher backwash rates of about 16.5 gpm/sf at 3°C (6,000 gpm) to about ~18.8 gpm/ft^2 at 20°C (6,800 gpm) than the existing backwash pump can provide. These backwash rates result in a total backwash pump flow ranging from 6,000 gpm to 6,800 gpm. This range of flow rates can be achieved either with a constant speed pump and some throttling of the discharge valve or by use of a variable speed drive pump. Both alternatives would require a flow meter on the pump discharge as well as Operator observance of actual bed expansion during different seasons of the year. For simplicity and overall reliability, it is recommended that the constant speed backwash pump systems be installed. A total of two new backwash pumps will be required, one duty unit and one standby unit.

New Air Scour System. To ensure optimum cleaning and to minimize the use of backwash water, it is recommended to add an air scour system. New air piping, control valves and blowers would be required to provide air to the new underdrain system. At a nominal air scour rate of 4 standard cubic feet per minute per square foot (scfm/sf), each blower will need to provide approximately 1,440 scfm to air scour one filter bed.

Filter Gallery Piping, Valve, and Instrumentation Modifications. The existing filter gallery piping, control valves and instrumentation are in poor condition, and require replacement to ensure a long remaining service life for the filters. The piping is severely corroded both on the interior pipe and exterior (Photo 4-9). The pneumatic controlled valves require significant maintenance and

Photo 4-9 – Existing Filter Gallery Piping

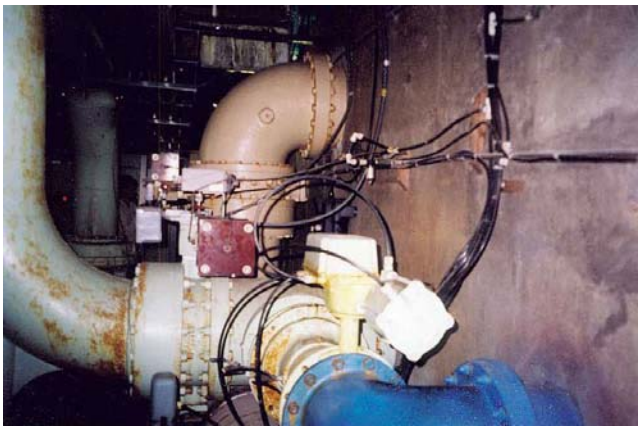

Photo 4-10 – Existing Pneumatic Filter Valve

replacement parts are difficult to acquire (Photo 4-10). It is recommended that all pneumatic actuators be replaced with electric actuators.

The large inter-connecting piping between the filter influent channels requires replacement. Installation of an isolation valve between these two existing filter influent channels will be investigated during design. Installing such a valve would require the addition of another 20 to 24-inch overflow pipe on the east filter inlet channel. Also, the existing 12-inch diameter influent pipe and butterfly valve to each filter will need to be replaced with new 16-inch diameter steel piping and a new 16-inch butterfly valve. This increase in pipe size is necessary to hydraulically accommodate the new higher flow (2.4 mgd) to each filter under the peak-day 26 mgd flow requirement.

It is recommended to replace the control valves with new valves equipped with electric actuators. To accommodate the higher filter rates, the filter effluent piping and flowmeters need to be replaced. New air scour piping and valves will be required to allow the use of air scour during two sets of filter backwashes. The filter piping should also be modified to allow the implementation of filter-to-waste (FTW) to ensure compliance with the Long-Term 2 Enhanced Surface Water Treatment Rule and improve operational control of the filters.

The new filter controls and electric-actuated butterfly valves (Photo 4-10) will need to be integrated into the plant's existing SCADA system. The ability to control each filter locally and remotely will be provided.

4.7.3 Filter-to-Waste (FTW) Improvements

It is recommend that the filter gallery piping and valves be replaced and upsized to provide for the needed higher filter loading rate. It is recommended to also include FTW piping and valve for each filter. This will improve the plant's ability to consistently meet individual filter turbidity provision requirements.

There are three options for managing the FTW flows including:

- Flow is diverted to the existing 24-inch filter waste washwater pipeline extending from the filter gallery to the existing equalization basin. FTW water is then recycled to the head of the treatment plant.

- Flow is diverted to a new equalization basin and then pumped to the head of the plant or to the filter influent channel.

- Flow is collected in a common pipeline within the filter gallery and a variable speed pump is used to recycle flow to the filter influent channel (or to the head of the plant) without the use of an equalization basin

The first option provides the simplest, most reliable, and lowest capital cost of all three options. Although minimum, the current 105,000 gallon volume of the existing equalization basin is adequate to handle these additional FTW flows. New submersible pumps will be required at the equalization basin to closely control recycle flows to the head of the plant.

Filter Improvements Construction Staging. The filter upgrades (media and underdrain replacement) should be implemented concurrently with the filter gallery piping modifications. The upgrades should be constructed during the low demand period of the year to allow as many as six filters to be out of service for an extended period of time. This would help minimize plant disruptions, and optimize construction efficiencies. It is anticipated that the entire construction duration will require 6 to 8 months to re-build all 12 filters concurrently with the filter gallery improvements.

4.8 EQUALIZATION BASIN IMPROVEMENTS

4.8.1 Description of Existing Facilities

The existing equalization basin (EQB) is a 32 ft diameter tank with a total usable volume of 105,000 gallons. Table ES-2 provides the current dimensions and design criteria for this facility. The EQB is split into two sections by a dividing wall which is offset from the center of the tank. The "solids side" (i.e. "dirty chamber") of the EQB has a maximum holding volume of about 24,000 gallons or 23 percent of the total EQB volume. The "recycle side" (i.e. "clean chamber") of the EQB has a maximum holding volume of about 81,000 gallons or 77 percent of the total volume. Typically, the backwash water created in the first 2 to 3 minutes of a filter backwash is diverted manually by the operator to solids side of the EQB. The remaining water from a filter backwash, is diverted by the operator to the recycle side of the EQB. The proposed new Filter-to-Waste operations would also send FTW water to the recycle side of the EQB. Water from the solids side is pumped directly to the sludge thickeners while water from the recycle side is pumped to the head of the treatment plant.

4.8.2 Evaluation of the Existing EQB

The predesign evaluation provided a detailed analysis of the ability of the existing EQB to meet both equalization storage needs of the NAWS project. Recommendations for modifying the existing EQB and pumping systems are provided. Specific objectives of the evaluation include:

- **Determine FBW Volumes/Day based upon New Filter Efficiency (i.e. UFRV & UBWV).** Determine the number of filter backwashes (FBW) required per day under the maximum daily flow conditions with Unit Filter Run Volumes (UFRVs) ranging from 5,000 to 10,000. This calculation will require determination of the new Unit Backwash Volume (UBWV) for the plant operating with the new filter media and modifications, assuming FTW is practiced.

- **Evaluate Capacity of the Existing EQB.** Determine if the existing EQB's 105,000 gallon total holding capacity is adequate for the new UBWV values as well as the need to annually drain each clarifier for maintenance needs. Compare the number of complete backwashes (including FTW volumes) which the existing EQB can contain with the design standard of EQB's holding 2 to 3 complete backwashes..

- **Evaluate Capacity of Existing Pumps and Piping.** Determine what recycle pumping arrangement (number, type, and size of pumps) is most suitable to recycle the backwash volumes created under minimum, average, and maximum flow conditions. Also, verify the capacity of the existing submersible pumps which move solids to the thickener basins.

4.8.3 Determination of FBW Volumes/Day

New UBWV of Approximately 200 Gal/SF. The proposed new dual media filters will require a backwash rate of about 19 gpm/sf during warm water temperatures of 20 C (68 F). Each filter has a surface area of 360 square feet (sf). Assuming a surface wash duration of 3 minutes at 0.7 gpm/sf and using a conservative backwash duration of 7 minutes at 20 gpm/sf, the average wash water volume for the refurbished filters will be approximately 51,000 gallons. In addition, it is estimated that the new Filter-to-Waste (FTW) system will operate for about 20 minutes after a filter is backwashed. Assuming the FTW flow is a nominal 3 gpm/sf (i.e., about 1080 gpm per filter), the FTW will result in another 22,000 gallons +/- of water sent to the EQB. Thus, a total of about 73,000 gallons will be sent to the EQB for each filter backwash. This total volume of 73,000 gallons results in a UBWV of about 200 gal/sf for the 360 sf of individual filters.

With the proposed new filter dual media and the new filter underdrain system, it is estimated that the refurbished filters will be capable of producing Unit Filter Run Volumes (UVRVs) in the range of 5,000 to 10,000 gal/sf. Chapter 4 of the May 2003 report titled "*Northwest Area Water Supply Project, Minot WTP Evaluation and Facilities Plan,*" provides a good explanation of why UFRVs between 5,000 and 10,000 gal/sf are most desirable. In summary, a small gain in filter production efficiency is made for UFRVs above 10,000 gal/sf, and a significant decrease in filter production efficiency begins at UFRVs of less than 5,000 gal/sf. At the newly estimated UBWV of 200 gal/sf, Figure 4-14 indicates the expected filter production efficiencies in the range of 96 to 98 percent are expected for this range of UFRVs.

Using the estimated UBWV of 200 gal/sf or 73,000 gallons used per filter backwash, Table 4-4 provides a summary of the estimated number of filter backwashes required per day at different UFRVs.

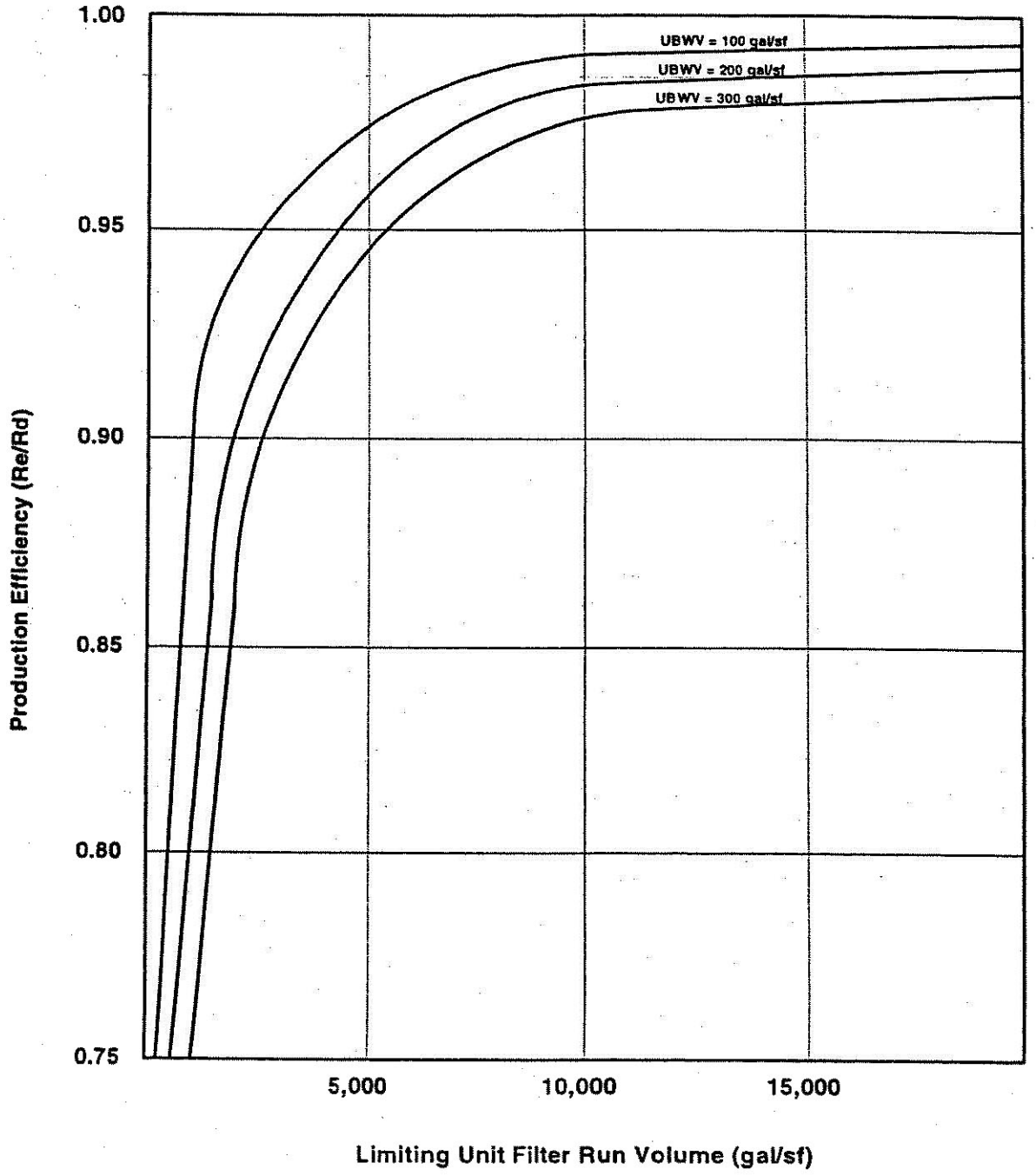

MINOT WTP IMPROVEMENTS PROJECT
INFLUENCE OF LIMITING UNIT FILTER RUN VOLUME AND UNIT BACKWASH VOLUME ON PRODUCTION EFFICIENCY
Figure 4-14

TABLE 4-4

MINOT WATER TREATMENT PLANT IMPROVEMENTS PROJECT
Estimated No. of Filter Backwash Volumes Required per Day*

Unit Filter Run Volume (UFRV) (Gal/sf)	Minimum Flow: 5.0 mgd (w/4 Filters Operating)	Phase 1 Avg Flow: 6.3 mgd (w/4 Filters Operating)	Phase 3 Avg Flow: 10.5 mgd (w/6 Filters Operating)	Phase 1 Max Flow: 18 mgd (w/10 Filters Operating)	Phase 3 Max Flow: 26 mgd (w/12 Filters Operating)
10,000	1.4	1.7	2.9	5.0	7.2
7,500	1.9	2.3	3.9	6.7	9.6
5,000	2.8	3.5	5.8	10.0	14.4

* Based upon varying filtration rates from 2.5 to 4.5 gpm/sf depending upon flows and number of filters in operation.

Table 4-4 shows that the estimated number of backwashes per day can vary from a low value of 1.4 backwash per day (at minimum flows of 5 mgd and UFRV of 10,000 gal/sf) to a worst case condition of 14.4 backwashes required per day (at maximum flow of 26 mgd and UFRV of 5,000 gal/sf). Assuming that these 14.4 backwashes would occur over a period of about 15 hours in a 24 hour day, this frequency would equate to performing 1 backwash approximately every 1 hour. The criteria of pumping one complete backwash volume every hour is used below as the recommended design criteria for recycle pump sizing and recycle pipeline sizing.

4.8.4 Capacity of Existing EQB is Below Industry Standard

EQB Volume Capacity. At an estimated UBWV of 200 gal/sf or 73,000 gallons used per filter backwash, the existing 105,000 gal total capacity EQB is capable of storing approximately 1.5 backwashes. This value is less than the desired design standard of EQBs storing between 2 and 3 backwash volumes (Kawamura – pg. 380). Given this condition, one of the following two improvements must be made to the EQB and recycle pumping systems:

- New submersible recycle pumps would installed in the existing EQB. These pumps would be sized to pump out the volume of one complete backwash and FTW volume in at least one hour to provide adequate flexibility for the Operations staff to perform "back-to-back" backwashes, or
- The volume of the EQB would be expanded, nearly doubled, to approximately 3 backwash volumes. Under this option, the existing recycle pumps could still be utilized.

Recommendation. The existing EQB volume is marginally adequate to continue serving the upgraded/expanded plant if the filter backwash operation is efficiently conducted. The use of air scour for filter backwash should help to reduce the total backwash volumes; however, the introduction of the new filter-to-waste process will add volume to the total backwash volumes. Considering the cost of expanding or building a new EQB, together with the limited site availability, it is recommended that the existing EQB be utilized and that the current 20-plus year old pumps be replaced with new submersible pumps. From the values presented in Table 4-4, the new EQB pumps need to be able to move approximately 75,000 gallons in one hour, under worst case future maximum plant production of 26 mgd. This equates to a total pumping capacity need of about 1,250 gpm.

4.8.5 Capacity of Existing EQB Pumps and Piping

Recycle Pumps and Piping. In sizing the recycle pumps, it is important to not be overly conservative as this could lead to excessively high recycle rates upon the influent plant flow. Normally, it is desirable to try to maintain recycle rates at less than 10 percent of the influent raw water flow rate. Maintaining steady, low recycle rates helps reduce the possibility of upsetting the treatment performance of the solids contact clarifiers and the filter process. At a minimum plant flow condition of 5 mgd (i.e., 3,500 gpm), a small, constant speed recycle pump on the order of about 350 gpm or less would meet this criteria. To meet maximum plant flow conditions, larger constant speed pumps need to be provided.

The existing recycle pump station only has room for a maximum of three submersible pumps. It is recommended that three new constant speed pumps of capacities of 300 gpm, 530 gpm, and 530 gpm be provided to meet backwash recycle needs as follows:

- Operate small (300 gpm) pump during minimum production periods. Two large pumps serve as standby units.
- Operate the small (300 gpm) pump and one large (530 gpm) pump to handle recycle flows up to 18 mgd plant flow conditions. A worst case condition of 10 backwashes per day on a 15 hour day would require about 1.5 hours between backwashes for a recycle pump flow of 830 gpm. One large pump serves as a standby unit.
- Operate all three pumps at a total flow of about 1,250 to 1,300 gpm (depending upon system hydraulics) to handle recycle flows up to 26 mgd plant flow conditions. A worst case condition of 14.4 backwashes per day on a 15 hour day would require about 1.0 hours between backwashes for a total recycle pump flow of ~1,250 gpm. This would meet the criteria of a maximum backwash frequency of 1 filter backwash per hour and the recycle flow would be less than 10 percent of the WTP influent flow rate.

Supporting calculations for the EQB size requirements and pump sizing requirements are provided in Appendix A.

A new 10-inch or 12-inch diameter recycle pipeline needs to be installed from the existing EQB to the new recycle tie-in point at the Influent Flow Control Facility. At predesign, it appears that a new 10-inch diameter pipeline with a new 8-inch diameter magnetic flow meter will be of properly convey the maximum anticipated flow of about 1,300 gpm.

The existing electrical MCC cabinet for the EQB pumps is relatively new and in good condition. The motor starters for the new submersible recycle pumps may have to be replaced due to size differences.

Thickener Pumps and Piping. The solids side of the EQB is currently equipped with two submersible pumps which pump solids laden water through one 4-inch diameter ductile iron pipe to the thickener basins. It is desirable to size the pumps to move a steady flow to the thickener basins to prevent hydraulically overloading the basins. Assuming a UFVR of about 7,500 gal/sf, a total backwash volume of about 51,000 gallons (excludes filter-to-waste volume) is generated. Assuming that 30 percent of the total backwash volume (i.e., ~15,300 gallons per backwash) is diverted by operations to this solids side of the EQB, then the daily volume of washwater sent to the solids side of the EQB would be:

- 146,000 gal/day at Phase 3 Maximum Flow of 26 mgd
- 101,000 gal/day at Phase 1 Maximum Flow of 18 mgd
- 59,000 gal/day at Phase 3 Average Flow of 10.5 mgd
- 35,000 gal/day at Phase 1 Average Flow of 6.3 mgd

In order to pump this water to the thickeners over an 8-hour work day, the following pumping rates (by one duty pump) need to be achieved:

- 303 gpm over 8 hours for Phase 3 Maximum Flow of 26 mgd
- 210 gpm over 8 hours for Phase 1 Maximum Flow of 18 mgd
- 122 gpm over 8 hours for Phase 3 Average Flow of 10.5 mgd
- 73 gpm over 8 hours for Phase 1 Average Flow of 6.3 mgd

Assuming the life expectancy of submersible pumps in this harsh application is about 10 to 15 years, it is recommended to replace the existing pumps with two new submersible pumps (one duty plus one standby). Each pump would have a capacity of approximately 170 gpm at the design head conditions. These pumps should be able to adequately handle all washwater pumping needs to the thickeners over the next 10 to 15 years, at which time they could be replaced with larger pumps as the plant production increases towards the 26 mgd ultimate flow. These pumps would be able to pump out the 30 percent of one backwash volume (i.e., 15,300 gallons) in approximately 90 minutes. This means that with one submersible pump in operation and one pump in stand-by, “back-to-back” filter backwashes could occur at a 90 minute interval. This time interval could be shortened if necessary by running the standby submersible pump to empty out this chamber faster, making it ready for a new filter backwash volume. It is also noted that a backwash volume of 15,300 gallons will not fill the 21,000 gallon capacity of the solid side chamber.

The existing electrical MCC cabinet for the EQB pumps is relatively new and in good condition. The motor starters for these new submersible recycle pumps may have to be replaced due to size differences.

4.9 NEW FINISHED WATER RESERVOIR AND HIGH SERVICE PUMP STATION (HSPS) FACILITY

4.9.1 Description

Finished water reservoirs for water treatment plants are typically sized on the order of 10 percent of daily plant production. For the future 26 mgd plant capacity of the Minot WTP, normal design would be to provide for a clearwell of about 2.5 million gallons (MG). Given that the existing clearwell will provide about 0.5 million gallons of usable storage volume (which includes approximately 130,000 gallons dedicated for filter backwash), a new clearwell / reservoir volume of about 2.0 million gallons is recommended.

The predesign work evaluated three different alternative locations for the new treated water reservoir. A detailed decision model was constructed to help evaluate the relative merits of the alternative sites. The results of the model indicated that the preferred site for this new facility lies on the City-owned property located on the east side of 16th street.

Figure 4-15 shows that the area available to site the new reservoir / HSPS facility at this location is constrained by the railroad tracks and right-of-way on the south side and by the 18/24-inch finished water transmission main and 12-inch raw water well line which run through the central area of the site. If these pipes are not relocated, then the capacity of the new reservoir is constrained to about 1.5 million gallons (with no space for UV facilities) or about 1.0 million gallons (with space for UV facilities). In order to construct a new 2.0 million gallon reservoir, about 420 feet of the finished water transmission main along with the parallel 12-inch well water line would have to be relocated to the north. The estimated cost to relocate these two pipes would be about $135,000.

Prior to the start of final design of the Phase 1 Improvements Project, a decision needs to be made concerning relocating these pipes and potentially expanding the volume of the new reservoir to 2.0 MG.

The new high service pump station facility associated with the reservoir and wet well facility will be provided with two sets of pumps. One set of pumps will be dedicated to the City's low-pressure zone (90 psig operating pressure) with the other set of pumps dedicated to the NAWS distribution system (150 psig operating pressure). The pumps will be vertical turbines mounted on top of the clearwell inside a building. The low-pressure zone pumping system will connect to a new 24-inch distribution system intertie to the City's distribution system. The high-pressure NAWS pumping system will connect to a new 36-inch transmission pipeline. This new transmission pipeline is currently planned to be routed to the north and cross underneath the Souris River then to the west under 16th street.

4.9.2 New Finished Water Reservoir Alternative Locations

The predesign study evaluated three (3) most reasonable alternatives for locating the new reservoir and high service pump station facility. The three alternatives sites are shown in Figure 4-15 and are described as follows:

Plot Date: 10-SEP-2007 14:47

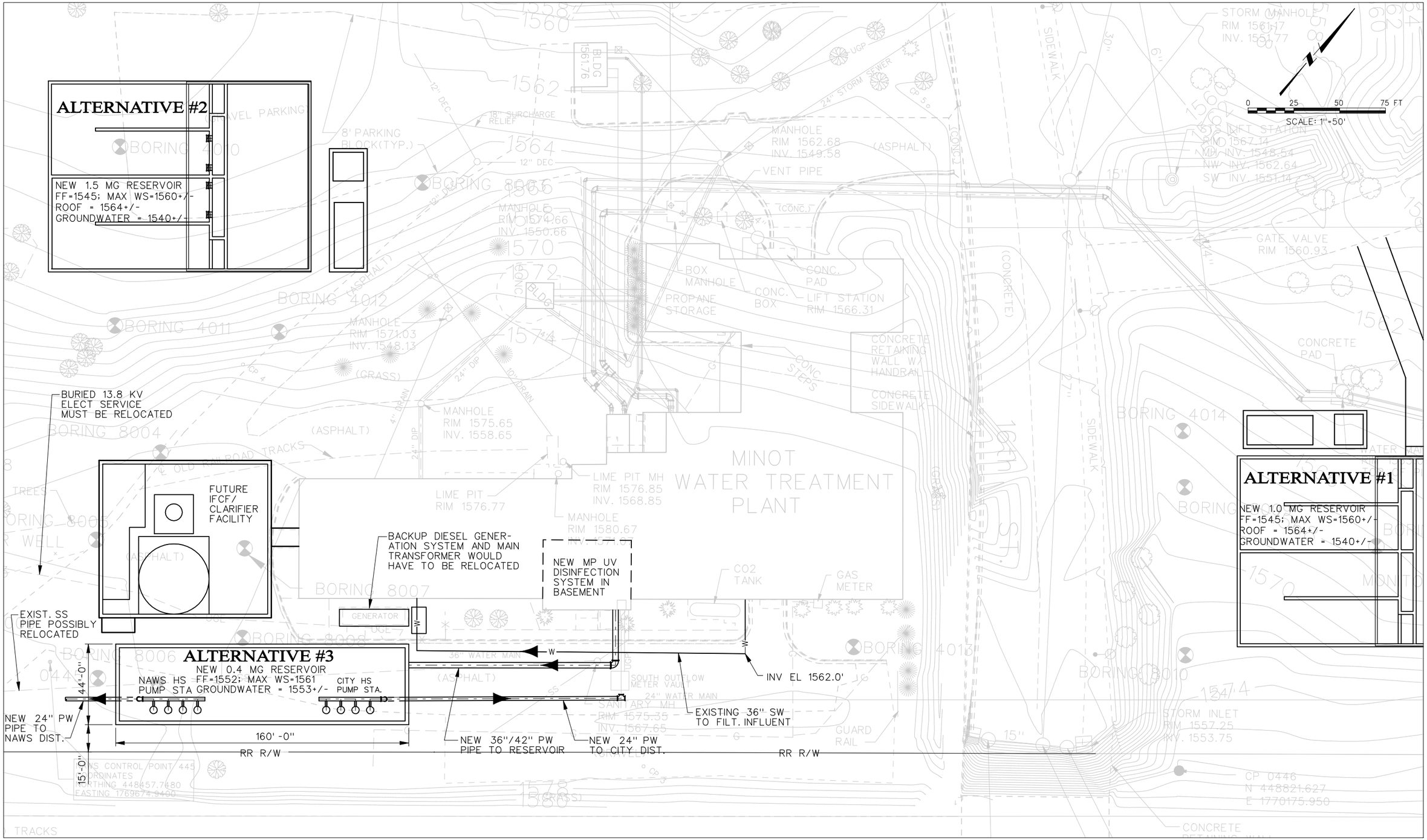

HOUSTON ENGINEERING, INC.

MWH

MINOT WTP IMPROVEMENTS PROJECT
RESERVOIR ALTERNATIVES
SITE PLAN
Figure 4-15

- Alternative 1: East Side Reservoir Alternative (on east side of 16th Street)
- Alternative 2: Northwest Reservoir Alternative (near gravel parking area)
- Alternative 3: Southwest Reservoir Alternative (adjacent to exist. filter area)

For each reservoir alternative, different options were evaluated as to how a future UV disinfection facility (discussed later in this Section) could be both hydraulically and physically integrated into the alternative. Alternatives 1 and 2 both had two options for integration of the UV disinfection facility, including:

- Option A: Locate new low pressure UV (LPUV) system in new below grade dry vault connected to new reservoir.
- Option. B: Locate new medium pressure UV (MPUV) system in existing Minot WTP high service pump station basement area.

Due to hydraulic and space constraints on the use of LP technology in the existing sub-basement area, only Option B (MPUV) could be utilized with Alternative. 3. A total of five alternatives for combining a new UV facility with the new reservoir and high service pump station facility were identified. These alternative combinations are:

- Alternative 1A: 1.0 MG East Side Reservoir w/ LPUV system as part of res. structure
- Alternative 1B: 1.5 MG East Side Reservoir w/ MPUV system in existing basement
- Alternative 2A: 1.0 MG Northwest Reservoir w/ LPUV system as part of res. structure
- Alternative 2B: 1.5 MG Northwest Reservoir w/ MPUV system in existing basement
- Alternative 3B: 0.4 MG Southwest Reservoir w/ MPUV system in existing basement

It should be noted that either LPUV or MPUV could be utilized for Alt. 1A in the new dry vault. As currently there are two reputable manufacturers of LPUV systems and three reputable manufacturers of MPUV systems, either technology should be able to be competitively bid.

4.9.3 Locating New MPUV Facility in Existing Sub-Basement

For Alternatives 1B and 2B, a new MPUV system would be located in the existing sub-basement area of the plant (at the location of the present high service pumps), as shown in Figure 4-16. Locating the MPUV reactors in the existing basement would be a fairly difficult exercise for the Contractor; yet technically feasible. By locating MPUV reactors in this area, it would be possible to increase the reservoir storage capacity for Alternatives 1 and 2 by about 0.4 to 0.5 MG. without moving existing pipelines or facilities.

4.9.4 Decision Matrix Comparison of Alternatives

Table 4-5 presents a decision matrix that provides a qualitative summary of important construction and Operations and Maintenance (O&M) issues for each of the alternatives. This table also presents estimated annual O&M costs associated with the different UV system options, based on an average annual flow of 10 mgd. The annual O&M costs do not include any possible

Plot Date: 10-SEP-2007 14:47

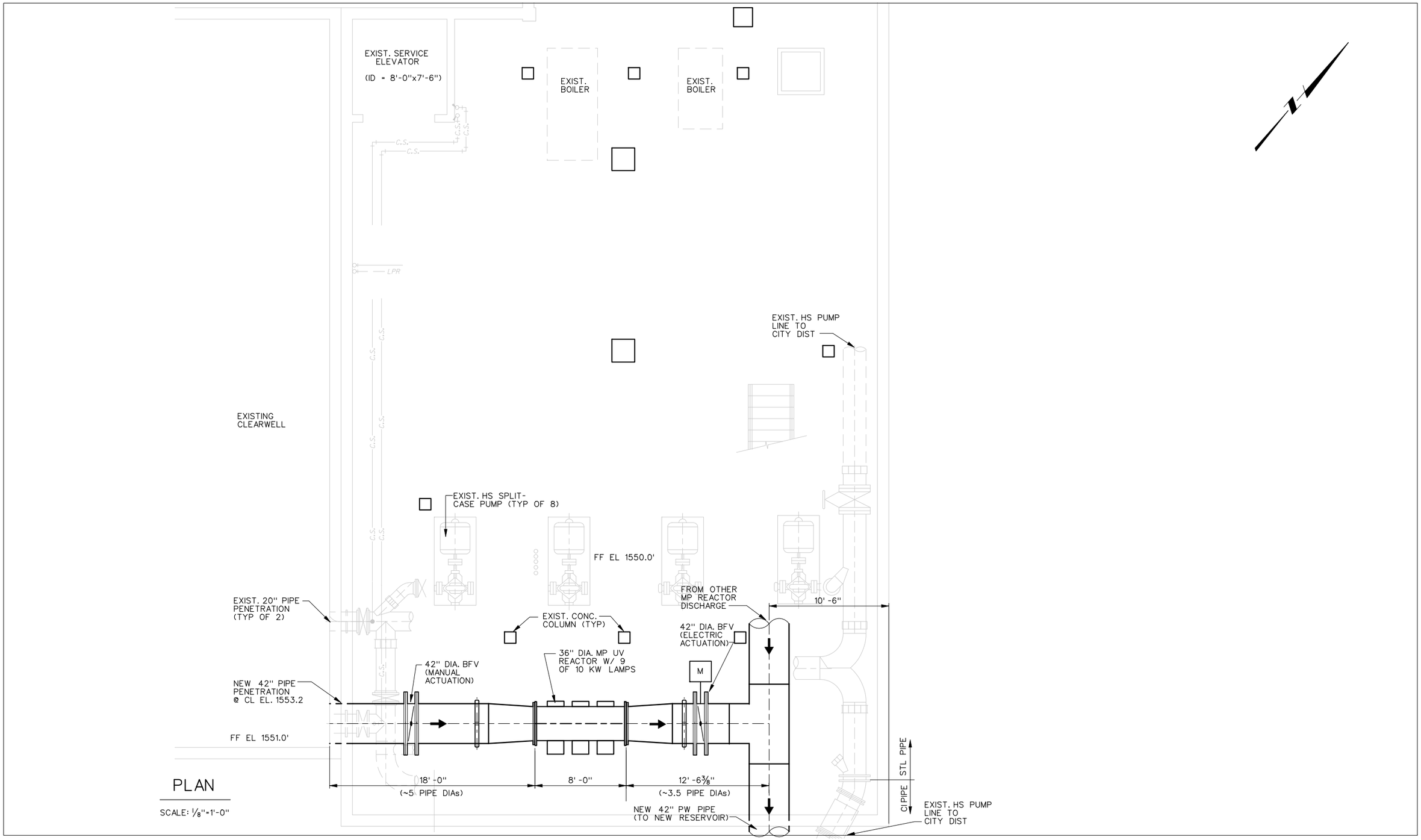

HOUSTON ENGINEERING, INC.

MWH

MINOT WTP IMPROVEMENTS PROJECT
EXISTING HS PUMP STATION BASEMENT AREA
MP UV SYSTEM LAYOUT ALTERNATIVE
Figure 4-16

patent payments that may be required for disinfection applications of UV irradiation. The annual O&M cost column shows that LPUV systems currently have a considerably lower annual O&M costs as compared to MPUV systems.

Table 4-6 presents the decision matrix using a weighted score for comparison of each of the identified issues in Table 4-5, for each of the alternatives. Weighting factors (scale 0.5 to 3) were assigned to each issue based on level of importance. A raw value (scale of 1 to 5) for level of difficulty or concern was assigned to each issue for each alternative. The weighted score equals the weighting factor times the raw value. Table 4-6 documents the MWH / Houston Engineering opinion of weighting factors and raw values assigned on all of the identified issues for each alternative. The total weighted score is given in the right-hand column with 100 representing a perfect score.

4.9.5 Recommendation for New Reservoir / HSPS Site

The total weighted score results from the decision matrix indicate that the best location option for the new reservoir / high service pump station and UV system is the Alternative 1 location (east side of 16th Street). Figure 4-17 presents a preliminary site plan for this alternative. Alternative 1A (a 1.0 MG reservoir and an LPUV system), currently represents the best and most flexible alternative for installation of a UV system under future phases of construction. However, both technology options (LPUV or MPUV) fit the footprint allotted for this option. Assuming that UV disinfection will be required to stay at the Minot WTP plant site, it is recommended that the an approximate 300 ft portion of the existing 18/24-inch transmission pipeline be relocated to provide area to construct a larger 2 MG reservoir.

Realizing that UV disinfection is an emerging technology, Alternative 1A provides the flexibility to take advantage of future improvements and efficiency gains in either LP or MP UV technologies. This alternative also allows for a competitive proposal process in which both LP and MP UV manufacturers could, at the beginning of design, provide price proposals to allow for an evaluation of the most favorable UV facilities for the plant.

4.9.6 Conceptual Layout of New Reservoir / HSPS and UV Facility

Figures 4-18 and 4-19 provide a predesign level plan view layout (upper level and lower level, respectively) of the recommended new Eastside Reservoir, along with high service pump station facilities and a new LPUV system. The surge tanks and UV reactors would be located on the lower level as shown in Figure 4-19. The main electrical / MCC area for the new 4160 volt and 480 volt high service pumps would likely be located on the upper level, along the west wall of the building as shown in Figure 4-18. However, this location may be changed during final design, depending upon final placement of the outdoor electrical facilities (transformer and standby engine generator).

Plot Date: 10-SEP-2007 14:48

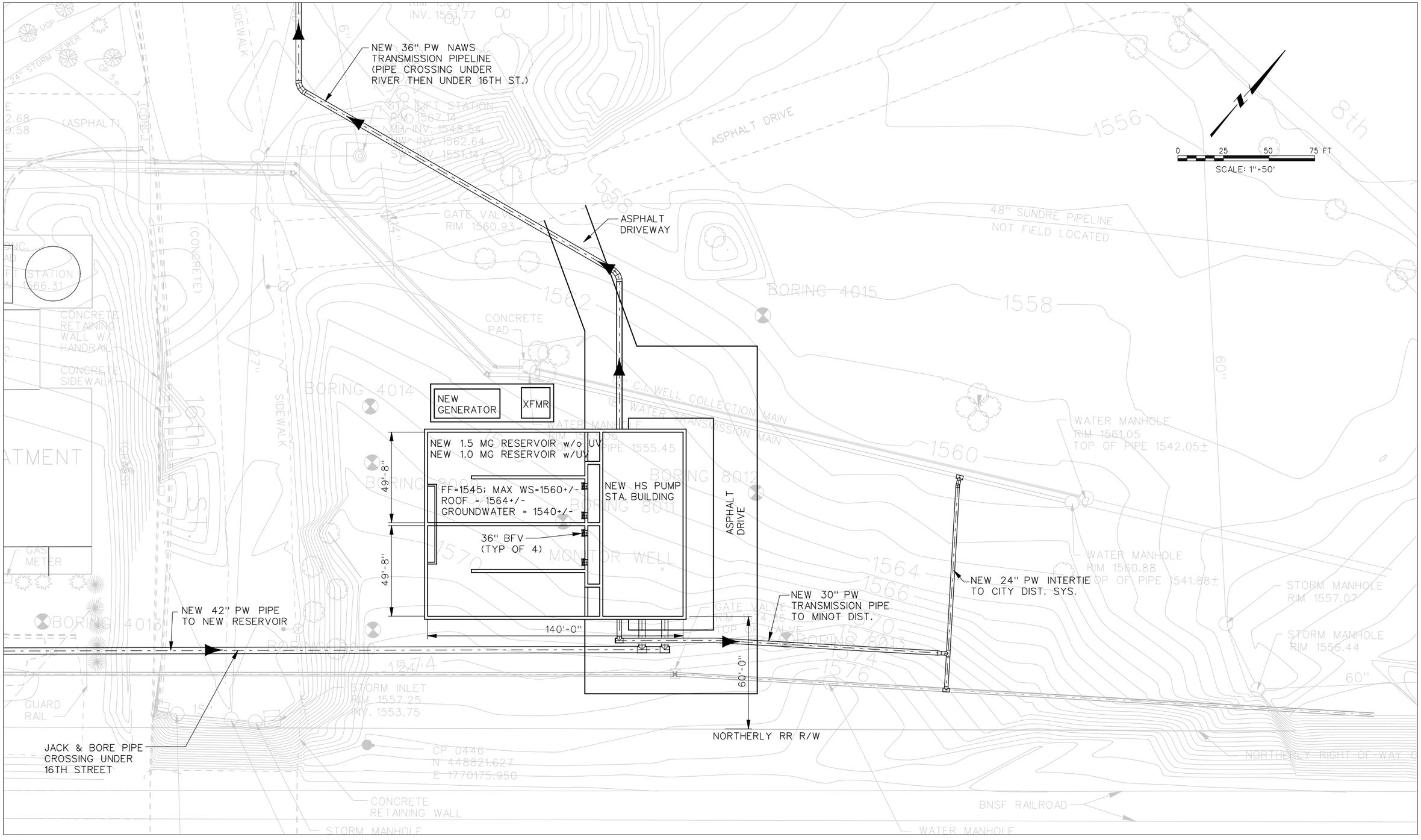

HOUSTON ENGINEERING, INC.

MWH

MINOT WTP IMPROVEMENTS PROJECT
EAST SIDE RESERVOIR ALTERNATIVE 1A PLAN
Figure 4-17

Plot Date: 10-SEP-2007 14:48

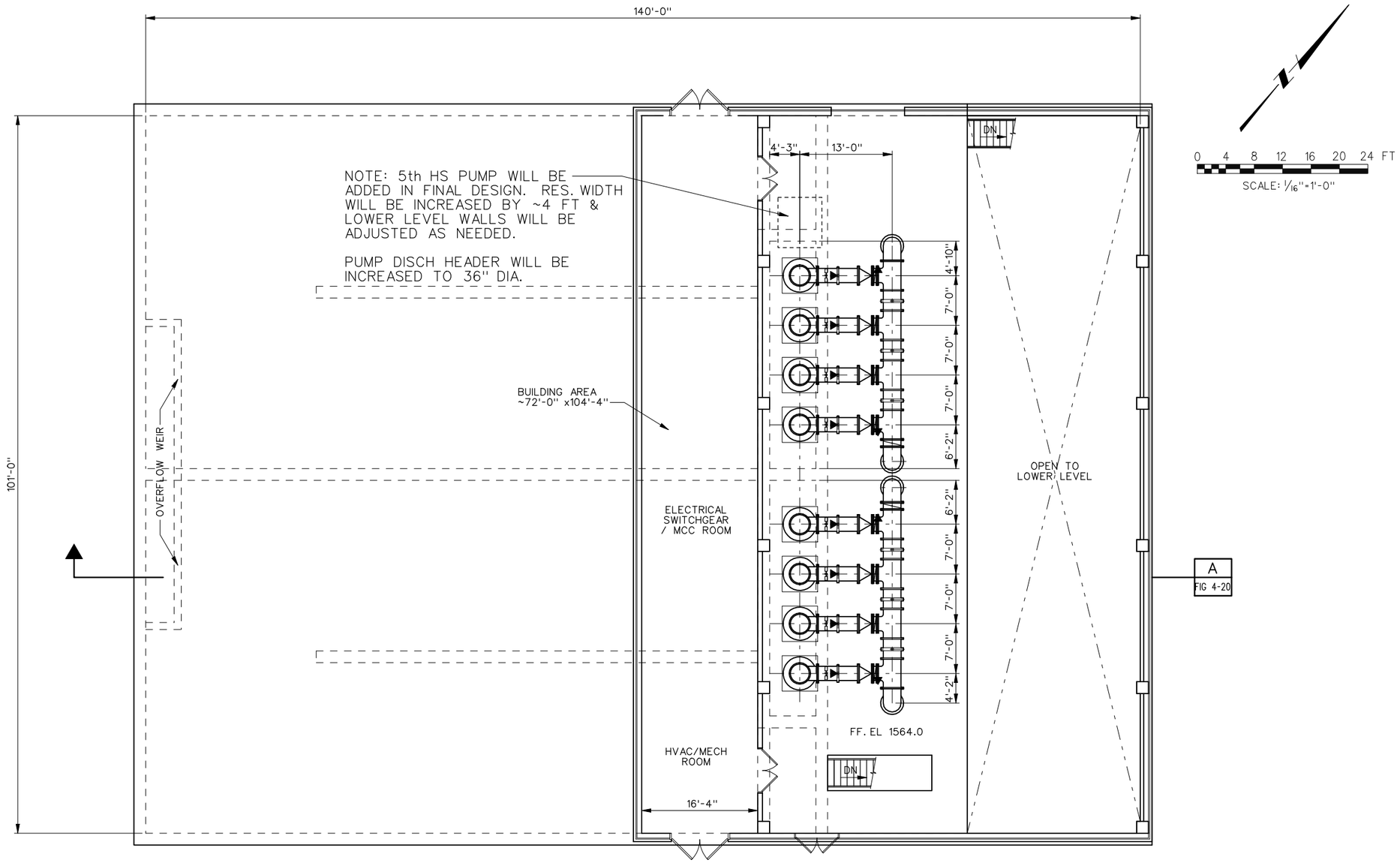

HOUSTON ENGINEERING, INC.

MWH

MINOT WTP IMPROVEMENTS PROJECT
EAST SIDE RESERVOIR ALTERNATIVE 1A
UPPER LEVEL PLAN
Figure 4-18

Plot Date: 10-SEP-2007 14:48

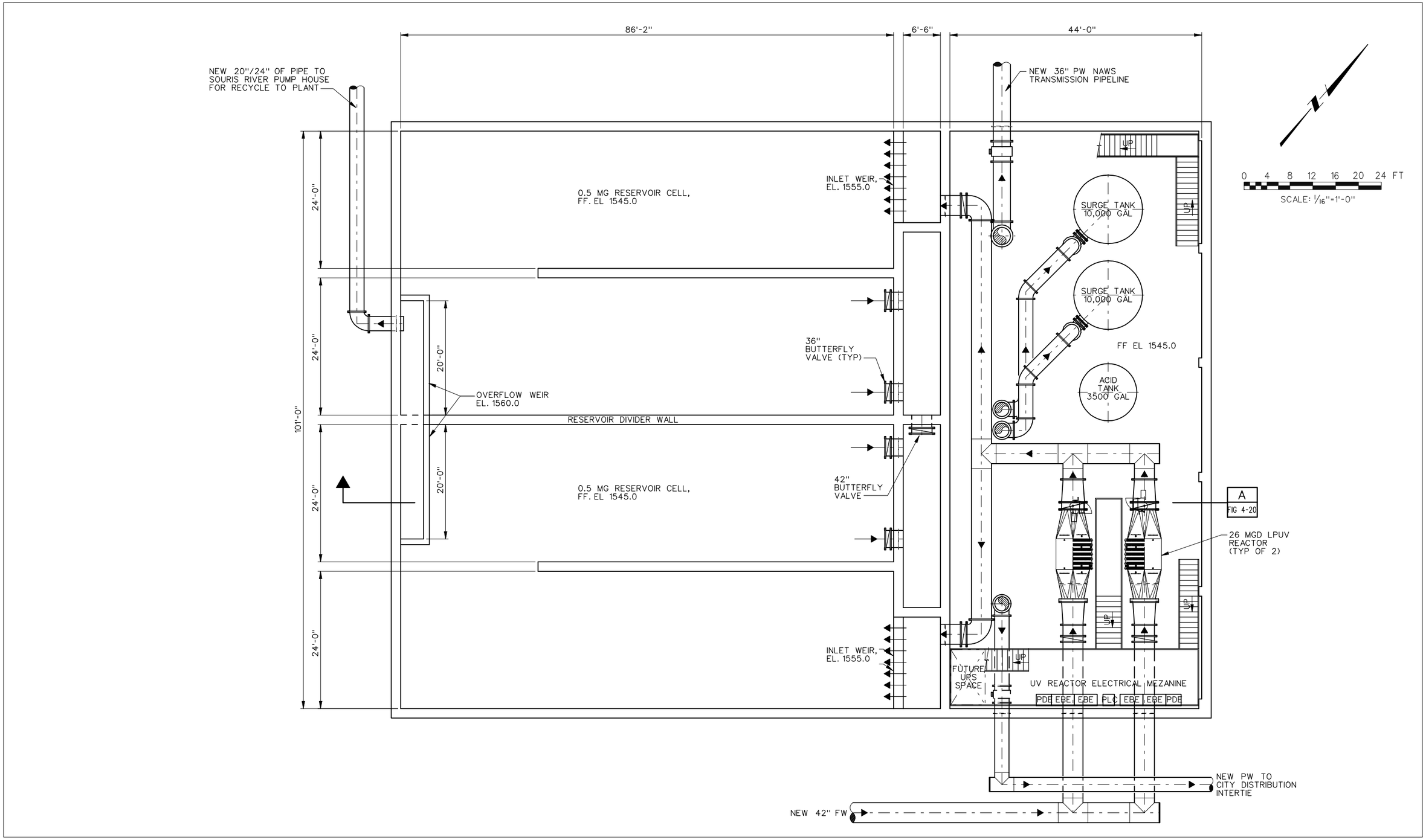

HOUSTON ENGINEERING, INC.

MWH

MINOT WTP IMPROVEMENTS PROJECT
EAST SIDE RESERVOIR ALTERNATIVE 1A
LOWER LEVEL PLAN
Figure 4-19

TABLE 4-5

MINOT WTP IMPROVEMENTS PROJECT
NEW RESERVOIR/UV SYSTEM ALTERNATIVES
DECISION MATRIX ISSUES

	New Reservoir/UV System Alternative	Total Estimated Capital Cost	UV System Annual O&M Costs*	Total New Reservoir Volume + (Usable Vol in Ex. Clearwell)	Impact to Existing Structures	Construction Coordination Concerns	Foundation / Differential Settlement Concerns	Groundwater Concerns	Available Site Space	Relocation of Existing Facilities & Utilities	# of New Pipes Core-Drilled thru Existing Clearwell	No. of Pipes to Cross 16th Street	Flooding Concerns	Hardness Deposit Concerns on UV Quartz Sleeves
1A.	1.0 MG East Reservoir with LP UV in New Vault	$6.71 M	$19,000 /yr	1.0 MG (0.40 MG)	No	Low	Low	Low	Yes	No	(Use 1 of 20" Existing Pipes)	1 – 42" Dia & 1 – 24" Dia	Low to Moderate	Moderate
1B.	1.5 MG East Reservoir with MP UV in Basement	$6.48 M	$32,000 /yr	1.5 MG (0.26 MG)	No	Low	Low	Low	Yes	No	2 of 42" Dia.	1 – 42" Dia & 1 – 24" Dia	Low to Moderate	High
2A.	1.0 MG NW Reservoir with LP UV in New Vault	$6.70 M	$19,000 /yr	1.0 MG (0.40 MG)	No	Low	High	Moderate to High	Yes	Some (minor)	1 of 36" Dia (Use 1 of 20"	1 - 30" Dia	Moderate to High	Moderate
2B.	1.5 MG NW Reservoir with MP UV in Basement	$6.47 M	$32,000 /yr	1.5 MG (0.26 MG)	No	Low	High	Moderate to High	Yes	Some (minor)	2 of 42" Dia.	1 - 30" Dia	Moderate to High	High
3B.	0.4 MG SW Reservoir with MP UV in Basement	$5.79 M	$32,000 /yr	0.40 MG (0.26 MG)	Yes	High	Low to Moderate	Moderate	No. (Crowds Ex. Facilities	Yes (UGE + SB Gener. + SS)	2 of 42" Dia.	None (Hydraulic Restriction)	Low	High

* Annual O&M costs based upon following: (10.5 mgd avg annual flow at 30 mJ/cm^2 at 90% UVT, $0.04/kw-hr). Costs do not include potential patent fee to Calgon Carbon of $0.015/1,000 gal of treated water.

TABLE 4-6

MINOT WTP IMPROVEMENTS PROJECT
NEW RESERVOIR/UV SYSTEM ALTERNATIVES
DECISION MATRIX WEIGHTED SCORE

Altern. No.	New Reservoir/UV System Alternative Description		Total Estimated Capital Cost	UV System Annual O&M Costs	Total New Reservoir Volume	Impact to Existing Structures	Construction Coordination Concerns	Foundation / Differential Settlement Concerns	Groundwater Concerns	Available Site Space	Relocation of Existing Facilities & Utilities	No. of New Pipes Core-Drilled through Existing Clearwell	No. of Pipes to Cross 16th Street	Flooding Concerns	Hardness Deposit Concerns on UV Quartz Sleeves	TOTAL WEIGHTED SCORE (MAX=100)
Weighting Factors:			**3**	**3**	**2**	**2**	**2**	**2**	**1**	**1**	**1**	**1**	**0.5**	**0.5**	**1**	**20**
SCALE: 1 = WORST (MOST CONCERN) TO 5 = BEST (LEAST CONCERN)																
1A.	1.0 MG East Reservoir with LP UV in New Vault	Raw Value:	3	4	3	5	5	5	5	4	5	5	2	4	5	
		Weighted Score:	**9**	**12**	**6**	**10**	**10**	**10**	**5**	**4**	**5**	**5**	**1**	**2**	**5**	**84**
1B.	1.5 MG East Reservoir with MP UV in Basement	Raw Value:	4	2	4	5	5	5	5	5	5	2	2	5	2	
		Weighted Score:	**12**	**6**	**8**	**10**	**10**	**10**	**5**	**5**	**5**	**2**	**1**	**2.5**	**2**	**78.5**
2A.	1.0 MG NW Reservoir with LP UV in New Vault	Raw Value:	3	4	3	5	3	1	1	2	4	5	5	2	5	
		Weighted Score:	**9**	**12**	**6**	**10**	**6**	**2**	**1**	**2**	**4**	**5**	**2.5**	**1**	**5**	**65.5**
2B.	1.5 MG NW Reservoir with MP UV in Basement	Raw Value:	4	2	4	5	3	1	1	3	4	2	5	3	2	
		Weighted Score:	**12**	**6**	**8**	**10**	**6**	**2**	**1**	**3**	**4**	**2**	**2.5**	**1.5**	**2**	**60**
3B.	0.4 MG SW Reservoir with MP UV in Basement	Raw Value:	5	4	1	1	1	4	3	1	1	2	5	5	2	
		Weighted Score:	**15**	**12**	**2**	**2**	**2**	**8**	**3**	**1**	**1**	**2**	**2.5**	**2.5**	**2**	**55**

Figure 4-20 provides a section view spanning across the east to west dimension of the facility. The electrical cabinets that power the UV facility could be located on a intermediate level mezzanine platform as shown, at an elevation of about 10 feet above the lower level floor. In addition, an approximate 5-ton bridge crane with a travelling span of approximately 55 feet will be provided to lift both the vertical turbine pumps as well as provide installation and lifting capabilities for the UV reactors, surge tanks, acid tank, other valves, and miscellaneous equipment located on the lower level of the facility.

4.10 POST-FILTRATION UV DISINFECTION SYSTEM OPTIONS

The Department of the Interior (memo from Eluid Martinez – 1/19/01) stated that "post-filtration ultraviolet treatment" be included at the Minot WTP. This section presents the predesign evaluation of the post-filtration UV options that can be hydraulically and physically integrated into the existing Minot WTP facility. Two basic types of UV disinfection technology are described along with the associated technical issues. Advantages and disadvantages are presented for the UV types and the installation location option.

There are two basic types of UV disinfection technologies that are applicable to the Minot WTP project. One technology utilizes low pressure – high output (LP) UV lamps while the other technology utilizes medium pressure (MP) UV lamps.

4.10.1 Current UV Manufacturers

Currently, the following UV companies manufacture complete UV disinfection systems for the municipal drinking water market:

Low Pressure – High Output (LP) Systems (~250 to 350 watts per lamp input power):

- ITT UV Technologies (Wedeco) (K-Type Reactors)
- Trojan Technologies Inc (Titan Reactors) New system selected by New York DEP project. Technology will be on the general market by late 2006...

Medium Pressure (MP) Systems (~2,500 to 20,000 watts per lamp input power):

- Calgon Carbon Inc. (Sentinel Reactors)
- Severn Trent Inc (Frontline Crossflow Reactors)
- Trojan Technologies Inc. (Swift Reactors)

The major differences between LP and MP UV technologies are:

- LP UV lamps typically run at germicidal power efficiencies of about 35 to 40 percent while MP lamps typically run at germicidal efficiencies in the 10 to 20 percent range. Germicidal efficiency is a measure of the UV radiation output in the wavelength band of 200 nm to 280 nm, which is highly effective in the inactivation of microorganisms.
- LP lamps have a life span of approximately 13,000 hours (1.5 years) whereas MP lamps have a life span of approximately 4,500 hours (0.5 years).

Plot Date: 10-SEP-2007 14:48

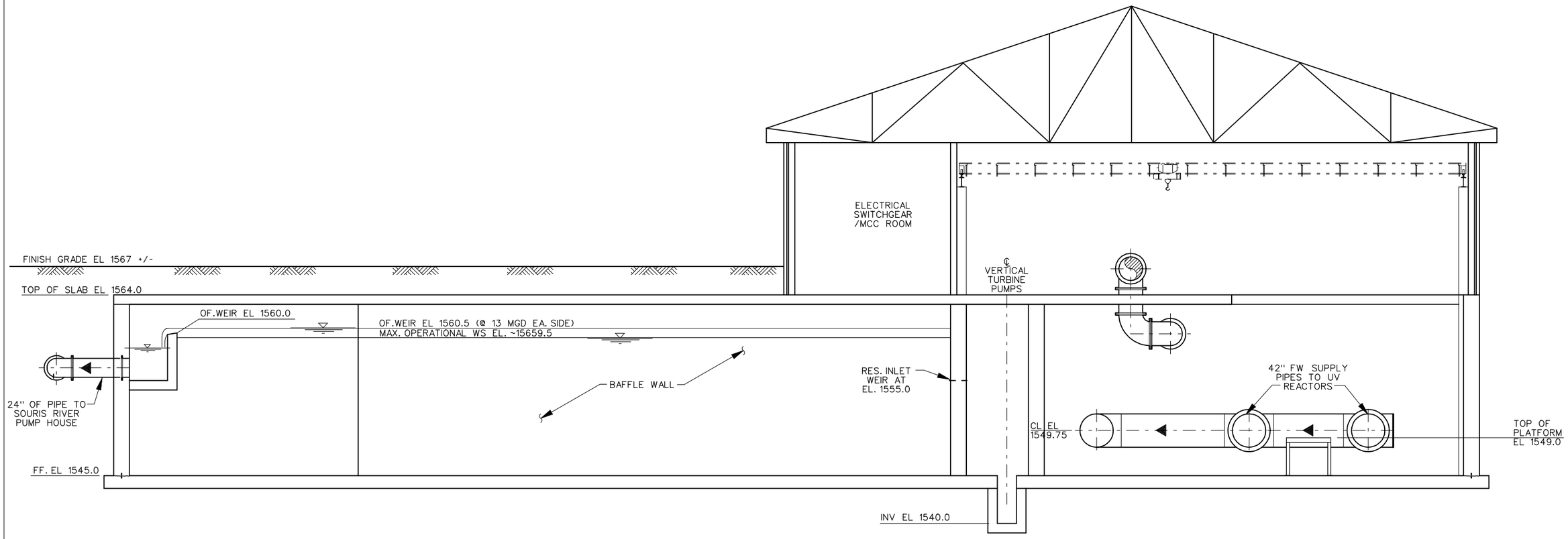

SECTION A
SCALE: 3/32"=1'-0"
FIG 4-18
FIG 4-19

HOUSTON ENGINEERING, INC.

MWH

MINOT WTP IMPROVEMENTS PROJECT
EAST SIDE RESERVOIR ALTERNATIVE 1A
SECTION
Figure 4-20

- LP lamps run at temperatures of about 80 to 100°C, whereas MP lamps run at temperatures of about 400 to 800°C. Thus, hardness scaling and fouling of the quartz sleeves on MP lamps is an operations issue. These systems typically use mechanical wiping systems to clean periodically clean both organic and inorganic deposits off the quartz sleeves.
- For a 26 mgd reactor at 90% UVT, it is estimated that an LP reactor would have about 80 to 100 lamps per reactor, whereas the MP reactor option would have about 8 to 14 lamps per reactor, depending upon actual lamp sizes used by the Manufacturer. (Note: if the design UVT were to drop to 84% (i.e. 6% drop), the number of lamps required per reactor will approximately double.)

4.10.2 UV System Design Approach

The following UV design characteristics / approaches are common to all of the UV system alternatives described in this memo:

UV Reactor Sizing Assumptions. Predesign level reactor sizing is based upon following assumptions:

- Filtered water UV transmittance (UVT) of 90 percent. (**Note**: recent bench-scale testing of Lake Sakakawea water in November, 2005 indicated significantly lower filtered UVT values in the 80 to 85 percent range. This decrease is significant and would more than double the number of lamps required in the UV system as well as the O&M costs of operating the system. It is critical to final design of the entire facility that an appropriate UVT value be selected at the beginning of final design.)
- UV Reduction Equivalent Dose (RED) of 32 mJ/cm^2 to meet the worst case possible requirements of EPA's Draft LT2ESWTR.
- End-of-lamp-life (EOLL) value of 0.8 for LP lamps and 0.8 for MP lamps with an additional quartz sleeve fouling factor applied of 5% (0.95).

UV Treatment of Combined Filter Effluent Only. Only UV systems that treat the combined filter effluent were evaluated. Smaller pipe-spool UV reactors that could be installed on individual filter effluent piping were not considered for the following reasons:

- It is undesirable to install individual UV reactors on each filter effluent pipe due to the lack of redundancy on the reactors and the requirement to take a filter off-line for any operational or maintenance issues associated with the UV reactor. Taking a filter on-line and off-line creates too much potential for upsetting the filtration process and thus overall plant performance.
- There is insufficient room in the existing filter pipe gallery to effectively incorporate pipe spool reactors.
- Due to size constraints, only small MP reactors can be used on individual filter effluent pipes. Considering that there would be a total of 12 of these small reactors (one per filter) along with all piping and valving modifications required with the

reactors and that these reactors utilize the inefficient MP lamps, there is no life-cycle cost savings as compared to the UV systems that treat combined filter effluent.

UV Reactor Requirements. The simplest, most reliable, and cost-effective UV reactor configuration is to provide a one (1) duty and one (1) standby reactor configuration. Both MPUV and LPUV current reactor technologies have single reactors treating up to 40 mgd and higher. For the Minot WTP, each reactor will be designed to treat up to 26 mgd based upon the criteria previously stated. A single-duty reactor system, compared to a multiple-duty reactor system, results in significant capital cost savings for the following reasons:

1. Building footprint for the UV system is significantly reduced for single duty reactor system.
2. No need for large inlet flow distribution structure to the single duty reactor systems. This eliminates the need to provide expensive flow meters, possibly flow control valves, and additional straight pipe runs associated with the meters. This also reduces the footprint requirements of the UV building.
3. The control philosophy / PLC programming is significantly simpler and more reliable.
4. For LP reactors, the increase in size of the reactors is minimal, as only the length increases by several feet, at most. The diameter and/or height of the LP reactors remain unchanged. For MP reactors, the diameter of the reactors typically increase with increasing flow capacity.
5. The overall capital cost for a single duty reactor system is less than the capital cost for multiple duty reactor system.
6. Turndown capacity of a single duty reactor typically range from about 4:1 to 6:1, depending upon the total number of lamps in the reactor. These turndown values will adequately cover the expected flow range variations of about 5 to 26 mgd for the NAWS system.

UV Reactor Turndown Capability. The UV reactors will be capable of being turned down to about 20% of maximum power, through a combination of turning off lamps (or rows of lamps) and varying power to lamps in operation. The exact turndown of the reactors will depend upon which manufacturer / technology is selected for the project. At minimum plant flows of 5 mgd or less, the UV system will provide a conservative overdose to the filtered water, ensuring that a greater than minimum UV dose is applied. The extra power consumption by the UV system in this overdose mode at low plant flows, is approximately 3 to 10 kW (depending upon the specific UV system being used).

UV Transmittance (UVT) Design Assumptions for Reactor Sizing. The sizing of UV reactors is heavily dependent upon the UV transmittance (UVT) value of the filtered water being treated. A design rule of thumb is that each one-percent decrease in UVT results in an increase in UV system / reactor size of about 15 percent. Thus, a loss of about 6 percent in UVT would require an almost doubling of UV reactor size.

Current Draft UV Disinfection Guidance Manual rule recommends the use of the lower 10-percentile UVT value measured as part of historical plant water quality measurements. For the case of the Minot WTP, no historical water quality data is available for UV absorbance / UVT of Lake Sakakawea filter effluent water. Since the current Minot WTP source water is significantly different than water quality of the new NAWS Lake Sakakawea water, there is currently no simple and reliable method to estimate what the filtered water UVT will be from the newly upgraded Minot WTP. Therefore, a conservative design value for UVT needs to be selected.

Experience on other conventional and softening filtration plants in the United States has shown that filtered water UVT typically varies from about 88 to 95 percent. For the Minot WTP Improvements project, a predesign UVT value of 90 percent was assumed for reactor sizing. However, recent bench-scale testing of Lake Sakakawea water (November, 2005) indicated significantly lower filtered UVT values in the 80 to 85 percent range. This decrease is significant and would more than double the number of lamps required in the UV system as well as the O&M costs of operating the system. It is critical to final design of the entire facility that an appropriate UVT value be selected prior to starting final design.

Low Pressure – Low Output (LP-LO) UV Systems are Outdated Technologies. Only low pressure – high output UV reactors and medium pressure UV reactors are considered as viable alternatives. Low pressure – low output (LP-LO)UV technology (i.e. UV lamps which have a UVC output of ~ 22 to 25 watts) is an outdated and very inefficient technology, that has considerably higher life cycle costs than the low pressure – high output technology. Also, none of the four most reputable manufacturers of UV systems offer this outdated technology in UV reactors. LP-LO technology will not be considered further for the Minot WTP for these reasons.

4.11 LOCATION OPTIONS FOR NEW UV DISINFECTION SYSTEM

Given that the new UV disinfection system will be installed on the combined filter effluent pipe, there are two basic options for locating this new disinfection system. They are:

- **Option A**. This option is to locate the new UV system in the lower level of the new reservoir complex. This option entails construction of additional space at the new pump station lower level mechanical room area, to house the UV reactors along with all associated piping, valves, electrical panels, and control equipment. Either an LP UV or MP UV system could be constructed with this option.
- **Option B**. This option is to locate the new UV system in the sub-basement area to the east of the existing clearwell and filters. These reactors would be located where the existing eight (8) split-case finish water pumps are currently located. Installation of the reactors and associated piping would have to be carefully staged with removal of the existing high service pumps, such that the minimum required finish water pumping capacity is maintained at all times. Due to hydraulic and space constraints, only MP UV systems are feasible at this location.

At Least One New Pipe Spool must be Cored through Existing Clearwell Walls. The existing 20-inch diameter pipe spools leaving the existing clearwell are too small for peak flow of 26 mgd. These two 20-inch diameter pipes leave the existing clearwell at centerline elevation 1551.75. For the 26 mgd peak flow condition, 13 mgd of filtered water would have to pass

through each of these 20-inch pipes, resulting in a flow velocity of 9.2 fps. This high velocity results in excessive headloss and reduces usable clearwell volume. For either UV location option given above, these two pipes will need to be replaced by core-drilling either one or two large diameter holes through the back-to-back, concrete walls of the existing clearwell and pump room. The size of the holes will be in the 30" to 48" range, and the number of holes drilled (1 or 2) will depend upon which option is selected for the location of the UV system.

Discussion of both of these UV system location options is presented below. This discussion expands on the previous evaluation of the new clearwell (reservoir) location.

4.11.1 OPTION A. New UV System Installed in New Reservoir / HSPS Facility

This option requires construction of the UV system in the lower floor area of the mechanical room at each reservoir site. The overall UV system requires an area of about 45-ft x 35-ft wide and would have a finish floor elevation of about 1545. This elevation is about 5' lower than the existing basement floor elevation. This would allow for greater utilization of the existing clearwell volume for filter backwash and would provide the extra driving head necessary to get through the selected LP or MP UV system. The finish floor elevation of this UV facility would match the elevation of the new reservoir floor (~1545). With a finish grade elevation in the range of 1565 to 1570, this means that the UV structure could have a depth of up to 25 feet. The depth of this UV structure would be split into two levels with the UV reactors residing on the lower level and all of the UV system electrical equipment residing at a mid-level/mezzanine area.

The two main advantages of locating the new UV facility at the new reservoir site are:

- **Allows for use of either LP or MP UV Technology.** The new UV facilities can be easily designed to both hydraulically and spatially accommodate either LP or MP systems. The best overall UV technology can be selected to serve the plant. This means that the life cycle power and lamp replacement cost advantages of LP technologies can be compared to the possible maintenance cost advantages of the MP technologies, and the lowest overall life cycle cost system can be selected for the plant.
- **Results in easier Construction Sequencing.** Because the new UV facilities would be separate from the existing finish water pump station, both the construction of this new building along with the demolition of the existing finish water pump station would be easier relative to Contractor planning and work staging. The project will realize cost savings by simplifying the Contractors work staging requirements.

4.11.2 OPTION B. New MP UV System Installed in Existing Basement Area

A detailed layout and hydraulic analysis was conducted on both low pressure (LP) and medium pressure (MP) UV systems at this location. It was determined that use of the more efficient LP reactors is not a feasible alternative at this location, due to both hydraulic and space constraints.

Due to the smaller space requirements of MP reactors, it is possible to fit this system in the existing basement area. Figure 4-16 presented a conceptual layout of one MP reactor with piping in the location where four split-case high service pumps are presently located. MP

reactors are typically shorter in height and laying length than LP reactors. Only the use of MP reactors is considered a feasible alternative for locating the UV disinfection system in the same location as the existing high service pumps. However, difficulties will be encountered in trying to stage construction of the MP reactors, pipe spools and valves, while staging the demolition of the existing split-case finish water pumps and piping. At least one half of the existing finish water pump system must remain in operation until the new finish water pump station facility is fully operational.

4.12 SOLIDS DEWATERING AND DISPOSAL

4.12.1 Description of Existing Facilities

The City of Minot recently installed two US Filter 1500 mm plate & frame (P&F) J-Press units. Each press is located over a large opening on the second floor of the sludge press / dump truck loading building. Located directly under each press on the first floor is a dump truck bay. The dump trucks have an approximate 12-ton load capacity. The presses are designed to operate independently as batch processes to dewater the settled blow-down feed slurry from the two existing solids thickeners. Each press has a total of 64 slurry dewatering chambers with each chamber capable of producing 1.95 ft^3 of dewatered sludge cake for a total of 125 ft^3 of cake per batch cycle. Assuming the presses are filled to about 96 percent of capacity with thickened slurry on each cycle, a total of 5.7 tons of dewatered cake can be produced on each cycle (assuming a cake bulk density of 95 lbs/ft^3).

One batch cycle consists of an automatic dewatering cycle and a required operator assisted cleaning cycle. The dewatering cycle consists of pumping thickened slurry from a solids thickener to the press, filling the chambers, and compressing (i.e. dewatering) the slurry over a time period into a dewatered sludge cake that typically ranges from 40 to 60 percent dry solids by weight. The dewatering cycle time depends upon the chemical composition and the percent solids in the feed slurry. Currently, the Minot WTP does not operate the P&F presses on the weekends, which results in the thickener slurry feed to the presses being highest in percent solids on Monday mornings. As a result, the P&F dewatering cycles currently average about 30 minutes on Mondays and increase to about 45 minutes by Fridays, when the thickener slurry solids are less concentrated (i.e. lower percent solids).

The cleaning cycle consists of the operator opening the “bomb-bay” doors under the press, sequentially spreading each plate such that the dewatered sludge falls down to the dump truck bed, a manual scrape of each chamber, and then reset the press in preparation for initiation of the next cycle. Approximately 15 to 20 minutes are required by the operator to complete the cleaning cycle. The total batch cycle time currently ranges from about 45 to 65 minutes. Assuming 60 minutes as an average batch cycle time, each press is capable of independently processing 8 complete batch cycles in an 8-hour work day. This rate of sludge dewatering equates to approximately 1,000 cubic feet or 95,000 pounds of dewatered sludge per 8-hour day.

Existing Operation Procedures for P&F Press Dewatering. The following data summarizes the typical solids dewatering and hauling operations procedures on the current groundwater supply. It is based upon data obtained from conversations with Operations staff from the Minot WTP.

Sept. through June Typical Press Operations:

- No. Units in Operation: Normally 2 (1 during low flow periods)
- Days / week in Operation: 5 (Monday through Friday)
- Hours / day in Operation: 8

July & August Typical Press Operations:

- No. Units in Operation: 2
- Days / week in Operation: 6 to 7
- Hours / day in Operation: 12 to 14

Common Year-Round Solids Dewatering & Hauling Operations Parameters:

- Batch cycle times on Mondays: ~45 minutes (due to thicker slurry from thickeners)
- Batch cycle times on Fridays: ~65 minutes (due to thinner slurry from thickeners)
- Avg Batch cycle time for calcs: ~60 minutes
- Avg. # of cycles/day for 5 day wk: ~13.0 (for avg. annual flow of 6.3 mgd.)
- Avg. # of cycles/day for 7 day wk: ~9.3 (for avg. annual flow of 6.3 mgd.)
- Dump truck capacity: 11.4 tons (2 press cycles @ 5.7 tons each)
- Dump truck haul cycle time: 20-25 minutes round trip to City's landfill
- % Solids of Thickener Effl. Feed: Not measured (estimated at over 10% by wt.)
- % of Mg(OH)2 in Feed Slurry: Not measured (estimated 5% to 15% by wt of total slurry)
- % Solids of Dewatered Cake: ~55% +/- (based on several lab analyses)
- Unit wt of Dewatered Cake: Not measured (estimated at 95 lbs/ft3)

4.12.2 Excess Lime Softening & Magnesium Carbonate Hardness Removal

Magnesium hydroxide ($Mg(OH)_2$ precipitate is formed as part of the lime softening process. Pages 4-3 through 4-8 of the *"Minot WTP Evaluation and Facilities Plan"*, (May, 2003) provide a thorough explanation of lime softening in general as well as the excess lime softening process. Excess lime softening is used for removal of both calcium and magnesium carbonate hardness. The higher the lime dose, the higher the resulting pH reached prior to precipitation, and the higher the percentage of $Mg(OH)_2$ precipitate formed. To a point, a higher lime dose also results in lower finished water total hardness. One result of practicing excess lime softening is that the percentage of $Mg(OH)_2$ in the precipitated sludge is increased. Sludges with higher concentrations of $Mg(OH)_2$ precipitate are more difficult to dewater as compared to sludges with lower concentrations of $Mg(OH)_2$. As a general rule, pure calcium hydroxide sludges (i.e. with 0 percent $Mg(OH)_2$ precipitate) can be dewatered by P&F presses to approximately 50 to 65 percent dry solids. However, pure magnesium hydroxide sludges (i.e. with 100 percent $Mg(OH)_2$ precipitate) can only be dewatered by P&F presses to approximately 20 to 30 percent dry solids, due to its hydrophilic characteristics.

The actual percentage of magnesium hydroxide sludge which will be formed through the softening process will be determined by the softening chemistry actually practiced by operators at the treatment plant. Important operational parameters will include the actual lime dose applied, the elevated pH reached prior to precipitation, and the softening surface tension equilibrium achieved. These factors play a significant role in determining what the final percentage of magnesium hardness is in the softened water as well as in the precipitated sludge.

Given that excess lime softening will likely be practiced on NAWS Lake Sakakawea water to remove some of the magnesium based hardness, in order to be conservative, the dry solids percentage was reduced to 50 percent in the solids generation calculations.

4.12.3 Predesign Evaluation of Existing Solids Dewatering and Disposal Processes

The proposed NAWS Lake Sakakawea water supply to be treated at the Minot WTP has a medium-hardness of approximately 200 ppm as calcium carbonate (CaCO3) with approximately 35 percent of the hardness being magnesium based and 65 percent of the hardness being calcium based. The current Minot WTP groundwater sources have an average hardness of approximately 500 ppm as CaCO3 with approximately 45 percent being magnesium based and 55 percent being calcium based. The purpose of this evaluation is to estimate the effects of the Lake Sakakawea water supply on the existing sludge thickening, dewatering, and disposal processes. Specific objectives of the evaluation include:

- Estimate sludge quantities generated from treatment of the current groundwater supplies compared to treating Lake Sakakawea raw water at both current and future water production levels. This analysis includes estimating the new lime dosage required for the Lake Sakakawea raw water supply along with estimating the amount of hardness (both calcium and magnesium) removed to achieve the same finished water total hardness levels as present (i.e. 100 to 120 ppm as $CaCO_3$.)
- Evaluate the capacity of the relatively new U.S. Filter P&F sludge presses and sludge batch cycle process including sludge disposal for both the current sludge generation values and for future estimated sludge generation values.
- Evaluate the sludge press cycle time and operation. This includes comparing the current number of press batch cycles required to the anticipated number of batch cycles required for treating Lake Sakakawea water at the future flow rates.
- Provide a comparison of the annual operational and maintenance costs to dewater, haul, and dispose of sludge at either the existing Minot municipal landfill or at a new landfill facility to be located on the south side of the watershed divide. This analysis will also compare treatment of current groundwater supplies to treatment of future Lake Sakakawea surface water supply.

4.12.4 Sludge Generation Quantities from Existing Local Aquifer and Proposed Lake Sakakawea Supplies

Existing Groundwater Supply Lime Dose and Sludge Generation Quantities. Table 4-7 provides a summary of 2003 monthly treated water production from the Sundre and Minot aquifers together with average raw and finished water hardness, lime dosages, and coagulant dosages. (The average dry solids generation values are calculated values utilizing a MWH developed lime-softening model called “Softie”). The data was obtained from the plant log-sheets provided by plant personnel. The 2003 values were utilized in this analysis because average monthly flows and solids generation values from June through Sept of 2003 were significantly higher than the same time period in 2004 and they have been reported to be more

TABLE 4-7

MINOT WTP IMPROVEMENTS PROJECT
YR. 2003, MINOT WTP SOLIDS GENERATION ESTIMATES
(Current Estimates Based upon Treating Existing Groundwater Well Supplies)

	Yr. 2003 Values		Groundwater Wells WQ		Finished WQ	Chemical Dosages		Avg. Dry Solids Generation Values (Calculated Values)			P&F Press Dewatering Cycles (Calculated upon LF Scale Recordings)			Minot Landfill Values	
Month	**Avg Daily Flow (mgd)**	**Monthly Production (MG)**	**Turbidity (NTU)**	**Ttl Hardness (mg/l CaCO3)**	**Ttl Hardness (mg/l CaCO3)**	**Lime (mg/l CaO)**	**Coagulant (mg/L)**	**USPR (lbs/MG)**	**Daily (lbs/day)**	**Monthly (tons/month)**	**(cyc./MG)**	**(cyc/month)**	**cyc/workday)**	**Cake Scale Recordings (tons/month)**	**Dry Solids at 55% wt (tons/month)**
				Note (1)	Notes (1,2)	Note (2)							Note (3)	Note (4)	Note (5)
Jan	**4.8**	150	1.0	500	105	475	4.9	9,230	44,600	692	1.74	261	12.0	**1,502**	826
Feb	**6.1**	172	1.0	500	130	323	4.0	8,650	53,100	744	1.15	198	9.1	**1,140**	627
Mar	**5.1**	158	1.0	500	130	400	4.7	8,650	44,100	684	1.31	208	9.6	**1,195**	657
April	**5.4**	161	1.0	500	130	408	4.8	8,650	46,300	695	1.58	254	11.7	**1,461**	804
May	**6.2**	191	1.0	500	110	394	4.2	9,110	56,200	871	1.13	215	9.9	**1,239**	681
June	**7.1**	212	1.0	500	110	440	4.6	9,110	64,400	967	1.68	357	16.4	**2,053**	1,129
July	**9.3**	287	1.0	500	100	423	4.7	9,350	86,600	1,343	1.49	428	19.7	**2,462**	1,354
Aug	**9.5**	295	1.0	500	100	433	4.7	9,350	88,800	1,377	1.48	435	20.0	**2,499**	1,374
Sept	**7.0**	210	1.0	500	100	443	4.8	9,350	65,400	982	1.49	313	14.4	**1,799**	989
Oct	**5.6**	173	1.0	500	110	423	4.1	9,110	50,800	788	1.35	234	10.8	**1,345**	740
Nov	**4.9**	147	1.0	500	100	437	3.0	9,350	45,800	687	1.52	223	10.3	**1,284**	706
Dec	**5.0**	154	1.0	500	105	494	4.3	9,230	45,800	711	1.67	257	11.8	**1,478**	813
Averages:	**6.3**	**193**	**1.0**	**500**	**110**	**424**	**4.4**	**9,090**	**57,658**	**879**	**1.47**	**282**	**13.0**	**1,621**	**800**
Annual Totals:		**2,310**								**10,540**		**3,380**		**19,450**	**10,700**

Estimated Sludge Generation Ratios:

TSS to NTU Removed Ratio =	**1.30**	(Ranges from 1.0 to 2.0 per Kawamura, pg 385)
TSS to Total Hardness Removed Ratio =	**2.80**	(Ranges from 2.0 to 3.5 per Kawamura, pg 517)
(lb sludge generated per lb hardness removed)		

Notes:

USPR: Unit Solids Production Rate
MG: Million Gallons
(1). Raw water hardness values analyzed just once per year at most. Finished water hardness measured every 4 to 6 hours.
(2). Average of actual monthly values for 2003 & 2004.
(3). Calculation based upon assumption of Operating presses maximum of 5 work-days per 7 day week.
(4). Actual measured value from the weighing scales at the City of Minot Landfill, (reported by landfill operations once per month).
(5). Plant measurements shown that dewatered cake averages ~55% by wt. dry solids.

typical of historic water demands. Table 4-7 shows that lime dosage averaged about 425 ppm as CaO (~1.77 tons lime / MG) and produced a finished water hardness of approximately 110 ppm as CaCO3 (+/- 15 ppm). Average daily generation of sludge was approximately 58,000 lbs. dry solids per day (29 tons / day). The average unit solids production rate (USPR) is approximately 9,100 lbs (4.55 tons) of dry solids per million gallons of Sundre / Minot aquifer water treated.

Lake Sakakawea Supply Lime Dose and Sludge Generation Quantities. Table 4-8 provides an estimate of lime dose, hardness removal, and sludge generation quantities by treating Lake Sakakawea water at the same average monthly flow values as given in Table 4-7. To reach the same finished water target hardness goal of 110 ppm as $CaCO_3$ (+/- 15 ppm) currently achieved, it is estimated that an average lime dose of about 130 ppm (+/- 20 ppm) as CaO (~0.54 tons lime / MG) will be required for softening Lake Sakakawea water with an average total hardness of 200 ppm as CaCO3. As a reference, the Dickinson WTP currently treats Lake Sakakawea water with average lime doses of 140 to 150 ppm. The Dickinson plant currently produces about 3 million gallons of water in a 24 hour day, yet they only operate the plant for 8 to 10 hours per day. Average daily generation of sludge is estimated at 13,200 lbs. dry solids per day (6.6 tons / day) or an average USPR of approximately 2,100 lbs. (1.05 tons) of dry solids per million gallons of Lake Sakakawea water treated. The solids generation rate of 6.6 tons per day is approximately 23 percent of the current solids generation rate of 29 tons per day.

Future Lake Sakakawea Supply Lime Dose and Sludge Generation Quantities. Table 4-9 provides an estimate of lime dose, hardness removal, and sludge generation anticipated by treating Lake Sakakawea at the future projected average annual flow of 10.5 mgd. A lime dosage of 110 ppm as CaO and a finished water hardness target of about 110 ppm as CaCO3 results in generation of an estimated 22,000 lbs / day (11 tons / day) of dry solids. This equates to an average USPR of approximately 2,100 lbs. (1.05 tons) of dry solids per million gallons of treated Lake Sakakawea water. Even at the 10.5 mgd average flow condition, the estimated solids generation rate of approximately 11 tons per day is only 38 percent of the current solids generation rate of 29 tons per day. This represents a significant decrease in sludge production. At a future peak day flow condition of 26 mgd, the solids generation rate is projected to be about 27 tons per day. This is still less than the current 29 tons per day solids generation rate at the current 6.3 mgd average day flow.

4.12.5 Evaluation of Plate & Frame Press Cycle Time and Operations

Based on reported monthly total scale readings from the landfill in tons of dewatered cake delivered per month, the number of batch cycles is estimated to range from 9 to 20 cycles per day for plant water production ranging from 5 to 10 mgd (see Table 4-7). This range in batch cycles is based on dewatering sludge on a 5 day per week basis. Processing more than 7 to 8 cycles per day at an average batch time of 60 minutes requires that both presses be in operation with essentially no stand-by press available.

During all months except for July and August, one plant operator is dedicated to the sludge press and cake hauling operations. One plant operator can handle up to about 11 batch cycles per 8-hour shift. This is accomplished by hauling a load of dewatered sludge produced from one press while the other press is in the dewatering cycle. More cycles per day are handled by adding additional staff as necessary, and by extending the workday / hauling schedule to as long

TABLE 4-8

MINOT WTP IMPROVEMENTS PROJECT
YR. 2003, MINOT WTP SOLIDS GENERATION ESTIMATES
(Assumes NAWS Project in Operation and Minot Plant Treating Lake Sakakawea Raw Water)

	Yr. 2003 Values		Lake Sakakawea Raw WQ		Finished WQ	Chemical Dosages		Avg. Dry Solids Generation Values (Calculated Values)			P&F Press Dewatering Cycles (Based on Calculated Dewatered Cake Wt)			Calculated Dewatered Cake wt. at 50% dry solids
Month	**Avg Daily Flow (mgd)**	**Monthly Production (MG)**	**Turbidity (NTU)**	**Ttl Hardness (mg/l CaCO3)**	**Ttl Hardness (mg/l CaCO3)**	**Lime (mg/l CaO)**	**Coagulant (mg/L)**	**USPR (lbs/MG)**	**Daily (lbs/day)**	**Monthly (tons/month)**	**(cyc./MG)**	**(cyc/month)**	**(cyc/workday)**	**(tons/month)**
				Note (1)	Note (2)	Note (2)							Note (3)	Note (5)
Jan	**4.8**	150	6.0	200	110	130	4.0	2,090	10,100	157	0.36	55	2.5	314
Feb	**6.1**	172	6.0	200	110	130	4.0	2,090	12,800	180	0.36	62	2.9	359
Mar	**5.1**	158	6.0	200	110	130	4.0	2,090	10,600	165	0.36	57	2.6	330
April	**5.4**	161	6.0	200	110	130	4.0	2,090	11,200	168	0.36	58	2.7	336
May	**6.2**	191	6.0	200	110	130	4.0	2,090	12,800	200	0.36	70	3.2	400
June	**7.1**	212	6.0	200	110	130	4.0	2,090	14,700	222	0.36	77	3.6	444
July	**9.3**	287	6.0	200	110	130	4.0	2,090	19,300	300	0.36	104	4.8	601
Aug	**9.5**	295	6.0	200	110	130	4.0	2,090	19,800	308	0.36	107	4.9	616
Sept	**7.0**	210	6.0	200	110	130	4.0	2,090	14,600	219	0.36	76	3.5	439
Oct	**5.6**	173	6.0	200	110	130	4.0	2,090	11,600	181	0.36	63	2.9	362
Nov	**4.9**	147	6.0	200	110	130	4.0	2,090	10,200	154	0.36	53	2.5	307
Dec	**5.0**	154	6.0	200	110	130	4.0	2,090	10,300	161	0.36	56	2.6	322
Averages:	**6.3**	**193**	**6.0**	**200**	**110**	**130**	**4.0**	**2,090**	**13,167**	**201**	**0.36**	**70**	**3.2**	**402**
Annual Totals:		**2,310**								**2,410**		**830**		**4,820**

Estimated Sludge Generation Ratios:

TSS to NTU Removed Ratio = **1.30** (Ranges from 1.0 to 2.0 per Kawamura, pg 385)

TSS to Total Hardness Removed Ratio = **2.70** (Ranges from 2.0 to 3.5 per Kawamura, pg 517)

(lb sludge generated per lb hardness removed)

Notes:

USPR: Unit Solids Production Rate
MG: Million Gallons
(1). Raw water hardness values based upon historical data. See Table 4-1 of March, 1999 NAWS Report "Water Quality Sampling Program Results".
(2). Finished water hardness goal to meet current FW hardness levels. Lime dosage estimated based upon MWH "Softie" lime softening model.
(3). Calculation based upon assumption of Operating presses maximum of 5 work-days per 7 day week.
(4). Not Used
(5). Estimated assuming dewatered cake is 50% by wt. dry solids - worst case.

TABLE 4-9

MINOT WTP IMPROVEMENTS PROJECT
FUTURE MINOT WTP SOLIDS GENERATION ESTIMATES
(Assumes NAWS Project in Operation and Minot Plant Treating Lake Sakakawea Raw Water)

	Future Projected (6)		Lake Sakakawea Raw WQ		Finished WQ	Chemical Dosages		Avg. Dry Solids Generation Values (Calculated Values)			P&F Press Dewatering Cycles (Based on Calculated Dewatered Cake Wt)			Calculated Dewatered Cake wt. at 50% dry solids
Month	**Avg Daily Flow (mgd)**	**Monthly Production (MG)**	**Turbidity (NTU)**	**Ttl Hardness (mg/l CaCO3)**	**Ttl Hardness (mg/l CaCO3)**	**Lime (mg/l CaO)**	**Coagulant (mg/L)**	**USPR (lbs/MG)**	**Daily (lbs/day)**	**Monthly (tons/month)**	**(cyc./MG)**	**(cyc/month)**	**(cyc/workday)**	**(tons/month)**
				Note (1)	Note (2)	Note (2)							Note (3)	Note (5)
Jan	**8.0**	248	6.0	200	110	130	4.0	2,090	16,700	259	0.36	90	4.2	518
Feb	**8.0**	224	6.0	200	110	130	4.0	2,090	16,700	234	0.36	81	3.7	468
Mar	**8.3**	257	6.0	200	110	130	4.0	2,090	17,300	269	0.36	94	4.3	538
April	**9.3**	279	6.0	200	110	130	4.0	2,090	19,400	292	0.36	101	4.7	583
May	**10.4**	322	6.0	200	110	130	4.0	2,090	21,700	337	0.36	117	5.4	674
June	**15.2**	456	6.0	200	110	130	4.0	2,090	31,700	477	0.36	166	7.6	953
July	**15.5**	481	6.0	200	110	130	4.0	2,090	32,300	502	0.36	175	8.0	1,004
Aug	**15.5**	481	6.0	200	110	130	4.0	2,090	32,300	502	0.36	175	8.0	1,004
Sept	**11.0**	330	6.0	200	110	130	4.0	2,090	22,900	345	0.36	120	5.5	690
Oct	**9.0**	279	6.0	200	110	130	4.0	2,090	18,800	292	0.36	101	4.7	583
Nov	**8.1**	243	6.0	200	110	130	4.0	2,090	16,900	254	0.36	88	4.1	508
Dec	**7.5**	233	6.0	200	110	130	4.0	2,090	15,600	243	0.36	85	3.9	486
Averages:	**10.50**	**319**	**6.0**	**200**	**110**	**130**	**4.0**	**2,090**	**21,850**	**334**	**0.36**	**116**	**5.3**	**667**
Annual Totals:		**3,832**								**4,000**		**1,390**		**8,000**
Peak Wk:	**26**	806	6.0	200	110	130	4.0	2,090	54,300	842	0.4	293	13.2	1,685

Estimated Sludge Generation Ratios:

TSS to NTU Removed Ratio = **1.30** (Ranges from 1.0 to 2.0 per Kawamura, pg 385)

TSS to Total Hardness Removed Ratio = **2.70** (Ranges from 2.0 to 3.5 per Kawamura, pg 517)

(lb sludge generated per lb hardness removed)

Notes:

USPR: Unit Solids Production Rate
MG: Million Gallons
(1). Raw water hardness values based upon historical data. See Table 4-1 of March, 1999 NAWS Report "Water Quality Sampling Program Results".
(2). Finished water hardness goal to meet current FW hardness levels. Lime dosage estimated based upon MWH "Softie" lime softening model.
(3). Calculation based upon assumption of Operating presses maximum of 5 work-days per 7 day week.
(4). Not Used
(5). Estimated assuming dewatered cake is 50% by wt. dry solids - worst case.
(6). Future projected flows based upon monthly averages determined in SA-15: Electrical Service Evaluation for NAWS Pretreated Water System

as 14-hours per day (from 7 AM. to 9 PM). The sludge processing operation is limited within this time period due to noise issues in the surrounding residential areas. Assuming 60 minute batch cycle times and two presses in operation, the maximum feasible number of press batch cycles and hauling cycles per day is approximately, 26 and 13 respectively. This equates to 148 tons of dewatered cake per day

with both presses operating at maximum production. Based on the total reported landfill cake scale recordings, a total of 3,380 press cycles were performed in 2003.

Table 4-8 provides comparative information to that presented in Table 4-7 on sludge generation and dewatering assuming treatment of Lake Sakakawea water at the same water production levels. The number of dewatering cycles decreases to about 2 to 5 cycles per day over the same 5 to 10 mgd average monthly flow range. A total of 830 press cycles are computed for treating the same annual daily flow average of 6.3 mgd of Lake Sakakawea water. The number of cycles is 25 percent of that computed in Table 4-7.

Table 4-9 depicts future projected plant flow rates on an average monthly basis ranging from about 7.5 to 15.5 mgd. The number of dewatering cycles for these flow rates would require approximately 4 to 8 cycles per day, on an 8-hour per day, 5 day per week basis. Thus, assuming the same 60 minute total batch cycle time and the 8 hour per day work operations schedule, only one press would be required to meet the process dewatering demands. Operation of one press will be adequate for flows less than 16 mgd when Lake Sakakawea water is being treated. Also, only one operator will be required to handle the sludge press and hauling operation at plant flow rates up to approximately 21.5 mgd, assuming that one operator will be able to handle up to 11 batch cycles in an 8-hour shift. It will be infrequent when more than one operator is required for the sludge press operation and sludge hauling. At the future average daily flow rate of 10.5 mgd of Lake Sakakawea water, Table 4-9 shows a total of only 1,390 press cycles per year required.

In summary, treatment of Lake Sakakawea water will result in significantly fewer press cycles required per year, calculated as follows:

- 3,380 cycles/year required to treat local aquifer water at current average annual flow of 6.3 mgd (see Table 4-7)
- 830 cycles/year required to treat Lake Sakakawea water at current average annual flow of 6.3 mgd (see Table 4-8)
- 1,390 cycles/year required to treat Lake Sakakawea water at future average annual flow of 10.5 mgd (see Table 4-9)

4.12.6 Comparison of Operations and Annual O&M Costs for Sludge Dewatering & Disposal

The US Filter presses appear properly sized to handle future peak sludge production levels, while being able to maintain one unit in a true stand-by mode of operation. The quantity of sludge being processed and hauled to a landfill, at the anticipated future average day 10.5 mgd flow rate, will be approximately 40 percent of current average sludge hauling requirements. This will result in significant annual operations and maintenance (O&M) cost savings, as presented in Table 4-10.

TABLE 4-10

MINOT WTP IMPROVEMENTS PROJECT
ANNUAL O&M COSTS TO DEWATER & DISPOSE OF SLUDGE (1)
(Assumes Average Annual Flow of 10.0 mgd)

Water Source to Minot WTP	Prod. of Dewatered Cake (1) (tons/year)	Dewatering O&M Costs (2) ($/year)	Hauling Costs to Landfill ($/year)	Tipping Costs at Landfill (3) ($/year)	O&M Costs at Landfill (4) ($/year)	Total Annual O&M Costs ($/year)
Current Sundre Aquifer & Minot Aquifer Wells to Ex. Minot Landfill (Unlined Cell) Hardness removed = 360 ppm Dried cake % solids = 55% Lime dose avg = 425 ppm	30,300	$226,000	$110,000 (7-mile roundtrip @ 30 min/trip)	$243,000 ($8.00/ton)	$0	**$579,000**
1. Lake Sakakawea Water Supply NAWS Project to Ex. Minot Landfill (Lined Cell) Hardness removed = 90 ppm Dried cake % solids = 50% Lime dose avg = 130 ppm	7,600	$48,000	$28,000 (7-mile roundtrip @ 30 min/trip)	$192,000 ($25.30/ton)	$0	**$268,000**
2. Lake Sakakawea Water Supply NAWS Project to New NAWS Landfill (Unlined Cell) Hardness removed = 90 ppm Dried cake % solids = 50% Lime dose avg = 130 ppm	7,600	$48,000	$111,000 (50-mile roundtrip @ 120 min/trip)	$0 ($0/ton)	$30,000 (subcontract earthwork & sl. cake cover every 2 weeks)	**$189,000**

(1) Assumes 2.8 ppm sludge produced per 1.0 ppm hardness removed for Sundre Aquifer water and 2.7 ppm sludge produced per 1.0 ppm hardness removed for Sakakawea water. (Kawamura, pg. 386)

(2) Assumes $4/cycle for P&F press depreciation and $2/cycle for energy and equipment maintenance costs. Operator salary and overhead cost estimated at $35/hr.

(3) Assumes current 2004 rate of $8/ton dewatered cake tipping fees at Minot Municipal Landfill for the unlined (inert) cell and a rate of $25.30/ton dewatered cake tipping fees for the lined solid waste cell at the same landfill.

(4) Assume subcontract out all earth excavation work and lime coverage work to local civil Contractor – for a total of 20 hrs/month at ~$125/hr cost (includes machine operator, machinery hourly costs, fuel, etc.) or $2,500/month or $30,000/yr.

Dewatered sludge is currently disposed of at the unlined (inert) cell of the City of Minot's municipal landfill site at a current tipping cost of $8.00 per ton. This landfill is located approximately 3.5 miles from the Minot WTP. In order to comply with all NAWS project requirements, it is anticipated that the dewatered sludge from the Lake Sakakawea water supply would have to be disposed of in one of the following two options:

- Hauled approximately 3.5 miles one-way (7 miles round-trip) to the existing City of Minot landfill for disposal in a lined cell(s) at a current tipping fee of $25.30 per ton, or
- Hauled approximately 25 miles one-way (50 miles round trip) to a newly constructed and dedicated NAWS project landfill located to the south of the watershed divide (Missouri River Basin disposal site), for disposal in an unlined cell with a tipping fee of $0.00 per ton. Costs to operate such a landfill are estimated at $30,000 per year. This assumes earthwork and sludge covering would be achieved by subcontract with a local civil contractor.

It should be noted that the second option listed above may be considered unreasonable under winter conditions, due to road hazard / ice conditions and the problem of the dewatered sludge possibly freezing inside the dump trucks. The 7-mile round-trip haul time to the existing City landfill facility is conservatively estimated at 30 minutes while the 50-mile round-trip haul-time to the possible new facility on the south of the divide is estimated at 120 minutes.

O&M Costs for Hauling and Disposal Options of Dewatered Sludge. Per Table 4-10, an annual O&M cost savings of approximately $79,000 per year may be realized (at an average annual flow of 10 mgd) if a newly constructed NAWS landfill were built on the south side of the watershed divide. The cost of operation or extra capital cost to provide trucks with heated beds or facilities to temporarily store sludge during winter freezing conditions will offset some of the savings provided by this option. The analysis indicates that the Missouri River Basin disposal site option should be given additional study and consideration to better define the long-term cost.

Capital Costs for Constructing New NAWS Landfill South of Divide. It is estimated that approximately 15 acres of land would be required for storage of 30 to 40 years of lime sludge. This assumes a depth of sludge of about 12 feet with 6 to 8 feet of soil layered intermittently, for a total disturbed depth of 20 feet. At an estimated land cost of about $2,600 per acre, land purchase costs would be roughly $40,000 plus an additional $10,000 for administrative, appraisal, legal, and surveying costs associated with land purchase. In concept, it is estimated that roughly $250,000 of capital would be required to develop the site. This site development includes providing gravel access road and driveways, site security (fencing and gates), potential clearing and grubbing, topsoil stockpiling, and other miscellaneous work. An additional $100,000 to purchase at one new dump truck with a heated bed liner should be included in this option, to prevent freezing of the dewatered sludge. Thus, the total capital expenditures for such a landfill site and truck purchase are estimated to be about $400,000. This cost does not include any permitting and landfill monitoring requirements that may be required by the state's DOH. With a potential annual savings of about $107,000 per year at an average annual flow of 10 mgd, it is estimated that constructing a new NAWS landfill would require about 4 to 5 years of operation in order to recover the capital expenditures in developing the landfill.

4.12.7 Summary of Findings and Recommendations

A summary of the major findings relative to this evaluation of the existing solids dewatering and sludge cake disposal facilities are as follows:

1. It is estimated that the usage of lime should drop to 30 to 35% of current lime use using Lake Sakakawea water. Likewise, the generation of sludge will decrease dramatically (to about 25% of current sludge production levels) with the treatment of Lake Sakakawea water.
2. The USPR for treatment of Lake Sakakawea (~1.1 tons/MG) water will be about 1/4 of the USPR for treatment of current groundwater supplies (~4.5 tons/MG).
3. The current P&F sludge presses are adequately sized for both current and peak future water production levels utilizing Lake Sakakawea water. Assuming that the presses will not operate for more than 8 hours in a given day, only one press will need to operate as a duty unit for future flows of up to about 23 mgd. For future flows above 23 mgd, either both units will have to be operated in duty mode, or the hours of operation in a given day will have to increase from 8 to about 10 to maintain one unit in a true standby mode.
4. Once treatment of Lake Sakakawea water begins, it is understood that the existing "lined solid waste cells" at the Minot municipal landfill would have to be utilized to contain any water which could possibly drain from the dewatered cake. The current tipping costs at the landfill's lined cells ($25.3/ton) is more than three times higher than the cost for tipping into the unlined cells ($8/ton).
5. The annual O&M costs for dewatering and disposing of sludge will be significantly reduced by the new treatment plant improvements and water source, with savings estimated on the order of at least $266,000 per year for treating a future average annual flow of 10.0 mgd.
6. The tipping cost at the Minot lined cells might encourage the consideration of the development of a new WTP landfill located to the south of the watershed divide where dewatered sludge could be dumped into unlined cells. If such a dedicated landfill to the south of the divide is considered, an estimated capital cost of about $400,000 may be required to purchase and develop the site. This cost also includes the cost to purchase one new heated-bed dump truck; however, the cost does not include any permitting, monitoring, engineering, construction management, or administrative costs potentially associated with such a facility. Annual O&M cost savings of about $79,000 per year are calculated if a new dedicated NAWS landfill were used.

4.13 PLANT ELECTRICAL SYSTEM IMPROVEMENTS

4.13.1 Background / Existing Facilities

Existing Transformer and Switchgear. Utility power to the Minot WTP is supplied by Xcel Energy, via a 13.8 kV buried service to the main plant pad mounted transformer (480Y/277 volts, 3-phase, 4-wire). This transformer is located outdoors, just to the west of the main plant

entrance, next to the existing standby engine generator. The facility main switchgear, consisting of Westinghouse Power-Line switchgear, is located on the floor of the filter operations deck. The service entrance main is a 3,000 Amp bolted pressure switch. It is unknown at this time if this main bolted pressure switch contains ground fault protection, single-phase protection, or blow-fuse protection.

The Main Switchgear, while relatively new and in apparent good condition, should ultimately be relocated and possibly be replaced. With the switchgear located on the filter deck floor, it is subject to high humidity conditions and possible corrosion due to the presence of a chlorine residual in the filter influent water. For long-term serviceability and increased reliability, this switchgear should consist of "draw-out" circuit breakers so that they can be maintained without needing to interrupt power to the entire facility. Switchgear design will also provide ground fault, short circuit, over current, single-phase, and low-voltage protection that can be properly coordinated to interrupt the minimum amount of equipment within the plant in the case of a fault. This switchgear should be replaced as part of the Phase 2 Improvements Project. The location of the replacement switchgear will be determined during final design.

Existing MCCs. Attached to the bolted pressure switch section of the switchgear is a group-mounted panelboard containing the following sub-main breakers:

- Equalization Basin MCC: 400 A molded case thermal magnetic circuit breaker, (Westinghouse HMCGA)
- Sludge Building MCC: 400 A molded case thermal magnetic circuit breaker, (Westinghouse HMCGA)
- Main Plant MCC: 600 A molded case thermal magnetic circuit breaker, (Westinghouse HMCGA)
- East Pump Station MCC-1: 1,200 A molded case thermal magnetic circuit breaker, (Westinghouse HMCGA)
- West Pump Station MCC-2: 1,200 A molded case thermal magnetic circuit breaker, (Westinghouse HMCGA)

These sub-main breakers feed the respective MCCs. All of the above MCCs, with the exception of the Main Plant MCC, are less than 20 years old and appear to be in good repair based upon a superficial examination of the equipment exterior.

Existing Standby Engine Generator. The plant has an existing, relatively new 1,500 KVA/1,250 kW engine-driven generator that is located in an outdoor enclosure on the south side of the WTP. This engine generator is relatively new and in good condition, and used to supply standby power to the facility. The automatic transfer switch (ATS), used to switch between commercial power and standby power, is located within the engine generator enclosure. The use of this generator is very important to the City in light of its current electrical power contract with the utility. The City receives a discounted rate from the utility for electricity because it allows the WTP to be taken off the main power grid with minimal advance notice rather than just relying on the generator for unplanned power outages.

Because, as part of the Phase 1 Improvements project, the current eight, 150 hp finish water pumps are being removed from the sub-basement and not replaced in the same area, the existing 1250 kW engine generator will have more than sufficient capacity to run all loads at the existing plant, and the new IFCF and clarifier building.

4.13.2 New Facilities

New Main Plant MCC. The Main Plant MCC is located in the end of the entry area of the WTP and essentially constitutes the wall between the entry way and the lime slaker chemical feed room. This motor control center is old and parts are hard, if not impossible, to obtain. The MCC is essentially in the middle of the plant, located in the main corridor between the softeners and the filters, with the rear of the cabinets in the lime slaker room. (See Photo 4-11). The National Electrical Code (NEC) requires a dedicated space for this type of equipment. This motor control center should be replaced because it will not meet the design life goal for the overall system. It is planned that this MCC will be replaced as part of the Phase 2 Improvements Project. The location of the replacement MCC could be the new electrical room in the new IFCF and Clarifier building, or possibly another location, to be determined during final design.

480 VAC Service to the New IFCF and Clarifier Building. Construction of the new IFCF and Clarifier building will require a new 480 VAC service be provided from the existing main MCC area. An electrical room will be provided on the upper level of this new building to provide all electrical service needs to this new facility. Space in this facility could also be provided for relocation of the existing plant MCC / electrical distribution equipment which is currently housed in the main entrance area of the plant. (Photo 4-11).

Photo 4-11 - Existing Electrical Distribution Panel

High Voltage Service to the New High Service Pump Station (HSPS) Transformer(s). High voltage electrical supply to the new HSPS facility will come from the existing 13.8 kV overhead power line located on the west side of the current plant. According to Xcel Energy, this is one of ten main 13.8 kV feeder lines which supplies the City of Minot. This power line is located about 1,000 ft from the proposed location of the new transformer area on the east side of 16th Street. Power service to the new HSPS can originate either at one of the existing overhead power poles on the plant site, or possibly at the underground 13.8 kV feed to the existing plant 480 VAC transformer. Discussions with Xcel Energy indicate that the new high voltage service supply to the HSPS could be by means of either overhead or buried cable service. This service could parallel the new 42-inch pipeline which will carry potable water to the new reservoir / HSPS facility. Both of these options have advantages and disadvantages which need to be investigated and discussed with the Utility early in final design.

4160 VAC Service Recommended to the New HSPS Pumps. Currently, there are a total of eight, 100 hp each, split-case pumps in the existing sub-basement finished water pumping area. Electrical service to these pumps is 480 VAC, 3-phase, 60 hertz fed from the 480 volt plant

transformer located next to the existing back-up generator. Generally, good electrical engineering practice allows for the use of 480 VAC service to pumps no larger than 200 hp. For 480 VAC service, a 200 hp motor would draw roughly 200 amps of current. This is a significantly large current that requires large conductors to minimize voltage drop, large conduits, concerns about ground fault currents, and other electrical issues.

Sizing of the new constant speed, vertical turbine pumps is summarized in the Design Criteria Table 4-1. The four pumps to serve the City of Minot distribution system are estimated to have two of 100 hp pumps and two of 300 hp pumps. The five pumps to serve the new NAWS distribution system are estimated to have two of 150 hp pumps and three of 500 hp pumps. For the large horsepower motors, it is recommended that 4160 VAC medium voltage service be provided. Although 2300 VAC service has been used for applications of this size in the past, the use of 5kV rated switchgear servicing 4160 VAC motors has become more the industry standard over the past 10 years, and is typically less expensive than running 2300 VAC switchgear and equipment. Although the transformer and MCC costs for the 4160 VAC electrical system will be higher than that of a comparable 480 VAC electrical system, savings realized in conductor and conduit sizing along with annual O&M costs savings result in a pay-back period typically on the order of 10 to 15 years.

The current design strategy is that the lower horsepower motors (150 hp and smaller) will be constant speed, 480 VAC motors. The larger pump motors of 200 hp and larger are planned to be constant speed 4,160 VAC, 3-phase motors. All constant speed motors will be equipped with soft starters to limit both electrical and hydraulic surge in the system.

HSPS Medium Voltage Transformer Sizing. The new 4160 and 480 VAC transformers will be sized to operate all of the duty high service pumps simultaneously as well as both UV reactors and miscellaneous 480 VAC loads.

Total connected 4160 VAC transformer load at peak conditions is estimated as follows:

• 1 Duty 300 hp Minot HS Pump:	300 kVA
• 2 Duty 500 hp NAWS HS Pumps:	1,000 kVA
• 1 Stand-by 300 hp Minot HS Pump:	300 kVA
• 1 Stand-by 500 hp NAWS HS Pump:	500 kVA
Total 4160 VAC HSPS Connected Load:	2,100 kVA

Total connected 480 VAC transformer load at peak conditions is estimated as follows:

• 2 Duty 100 hp Minot HS Pump:	200 kVA
• 2 Duty 150 hp NAWS HS Pumps:	300 kVA
• 2 of 50 kVA UV Reactors (Duty + Standby)	100 kVA
• 480 / 120 VAC misc. load	50 kVA
Total 480 VAC HSPS Connected Load:	650 kVA

The above connected load KVA values are calculated assuming a very low (conservative) average power factor of 0.75. Actual power factor design should be at least 0.85 meaning that the above KVA numbers will reduce by at least 10 percent. It is estimated that the final 4160 VAC transformer design will be near 2,000 kVA. During final design, a decision must be made as to whether it is desired to have a standby 4160 volt transformer mounted live next to the duty transformer, or whether reliance on the standby generator is sufficient in terms of redundancy and reliability. (The total installed construction cost (including concrete pad, misc., shipping, all of the Contractor's overhead & profit, etc.) of one of the new 2,000 kVA 4160 volt pad mount transformers is estimated at approximately $90,000.)

Standby Generator Power. In case of utility power outage, it is recommended that one diesel engine generator be provided at the HSPS to provide emergency power to at most four of the five 4160 VAC pumps. Excluding the stand-by NAWS 500 HP pump, this would mean that a total of 600 hp pumping capacity would be available to the City of Minot and 1,000 hp pumping capacity would be available to the NAWS users. These four pumps would have a connected KVA rating of about 1,600 kVA (at power factor 0.75) and likely less for better power factor.

With the ability to operate 4 of these 5 large pumps on standby power, it would not be necessary to provide standby power to any of the smaller 480 VAC pumps. This would eliminate the need for any new diesel engine generator to provide 480 VAC service to the HSPS pumps. Another option would be to provide backup 480 VAC power from the excess generating capacity which will be available from the existing plant 1250 KW diesel generator. This existing generator will have greatly reduced load upon it once the existing split-case finished water pumps are taken out of service.

4.14 SCADA SYSTEM IMPROVEMENTS

The plant's SCADA system was upgraded in 2001. The upgrade included the addition of several PLC panels and a PC-based SCADA software package (Wonderware) linked via an Ethernet network. The entire system was designed such that expansion could be easily accommodated. To accommodate the additional input/output (I/O) that will be needed for the expansion and upgrade of the Minot WTP, additional PLC panels would most likely be added at the chemical feed area, the new clarifier building, and the new high service pump station/clearwell. A fiber optic Ethernet link would be provided for the pump station due to its distance from the main plant.

The two PLC panels located on the filter operating deck were designed with spare points reserved specifically for the anticipated conversion of the filter valves to motor-operated actuators. This valve modification will be needed to account for the addition of air scour and filter-to-waste valves. As part of the filter upgrades, the filter control consoles for Filters 7 through 12 (which are original 1961 vintage) will need to be replaced to match the functionality of the more recently replaced consoles for Filters 1 through 6. An alternative to replacing the panels is to eliminate them and provide control via a PLC based system.

The existing SCADA-PC is located in a corner of the existing laboratory. Assuming the upgrade of the plant includes a new dedicated control room, a second back-up PC workstation and larger

computer monitors to serve as a Human Machine Interface (HMI) should be considered in both locations.

The recently upgraded plant SCADA system will allow easy integration with off-site monitoring and control for the NAWS system including the following facilities:

- Raw water intake and pump station facilities
- Pretreatment and Booster pump station facilities
- Pretreated water storage facilities
- Pressure reducing stations

Two options to consider for locating the "NAWS Control Room" facilities would be to create a small office / control room space on the upper level of the new high service pump station building; or, to identify space in a new control room which could be built onto the south side of the plant, adjacent to the existing stairwell entrance to the plant. This decision for location of a control room will need to be made during the final design of the Phase 1 Improvements project.

4.15 WELLFIELD IMPROVEMENTS FOR RELIABLE EMERGENCY SOURCE

In the event of a NAWS water supply interruption or extended power outage, an emergency / backup water supply will be necessary. To minimize long-term maintenance and costs for wells that only produce minimal flows and a water source that will be used very infrequently, it is recommended to limit the number of wells available for reliable backup/emergency supply. It will be necessary to identify the minimum groundwater supply required for these infrequent emergency conditions. Preliminarily, it is recommended to plan for 5 to 10 mgd of emergency groundwater supply. This is the anticipated average day demand. Wells not identified for backup/emergency use could be abandoned and their electrical services terminated as a way to reduce costs.

One possible long-term groundwater supply option is to use only the high production Sundre wells C and D following the conversion to a Lake Sakakawea water supply. A review of recent City records indicates that these two wells can produce 2,900 and 2,200 gpm respectively (total of approximately 7.3 mgd). This level of production might be able provide sufficient emergency supply, in the event of NAWS supply interruption. This would be coupled with a public cooperation program that could possibly eliminate unnecessary water use such as home irrigation, until such time when NAWS service is restored.

The designated wells would have to be exercised routinely to purge old water. Also, to ensure well operations during a prolonged power outage, it may be worth while for the City to invest in one or two portable diesel generators which could be easily mobilized and connected to Sundre wells C and D. The generators could be trailer mounted and stored indoors to provide protection from weather until needed. Installation of new permanent diesel generators at the various wells is probably not advisable as these units would be expensive and would require more operations and maintenance efforts to exercise the generators and keep them operational, especially in winter months.

4.16 SOURIS RIVER PUMP STATION IMPROVEMENTS

The existing Souris River Pump Station currently serves as the point where all plant drainage is collected and then returned as recycle water to the head of the plant. The Souris River is no longer used as a raw water supply and the river intake gates are closed. It is recommended to maintain the Souris River Pump Station for drainage flow management and also to install a permanent barrier (i.e., cement plug) to keep plant water from draining into the river, and vice-versa to satisfy NEPA commitments. The three existing submersible pumps in the Souris River pump station are oversized to serve as drainage recycle pumps and should be replaced with smaller submersible pumps. The internal piping should also be replaced. The existing electrical switchgear cabinet for these pumps (located in the Equalization Basin) has significant remaining useful life, but new "starters" may be required to serve the new smaller pumps.

4.17 ADDITIONAL ADMINISTRATIVE AND OPERATOR WORK SPACE

Some additional office / personnel support space could be added near the main south entrance of the WTP. In addition, a large portion of the secondary electrical control and distribution equipment has already been removed from the central electrical distribution / MCC panel in the entrance area of the plant (Photo 4-12). Final design will consider both replacing this entire electrical MCC panel with smaller new panels in the same area, or locating the new panels in another area of the plant, including possibly the new electrical room in the IFCF and Clarifier building. Either of these alternatives will free up additional personnel space in this existing entry area.

Photo 4-12 - Existing Entry Area and Personnel Space

The provision of other additional new personnel facilities including a new female locker room, additional laboratory area, storage and spare parts room, an operator work / conference room, and possibly a new control room for the NAWS project facilities can be provided in the appropriate phase of the Improvements project. Additional planning and discussions will be held with plant personnel during the Phase 1 Improvements Project to determine the best solution for these facilities.

4.18 PLANT HVAC IMPROVEMENTS

Improvements in the building heating, ventilation, and air conditioning (HVAC) system are recommended for a variety of reasons. The areas of the plant with open water surfaces could potentially be subject to volatilization of small amounts of chlorine due to the chloramines present in the plant influent water. Chlorine off-gas coupled with high humidity creates a very corrosive atmosphere. Improved ventilation, heating and dehumidifying in the existing clarifier

areas, filter deck area and in other interior building spaces such as pipe galleries and pumping rooms would also reduce the corrosive atmosphere created by condensation.

As noted during the site audit, many areas of the existing building are being heated with individual space heaters. This approach can be eliminated through changes in the overall building HVAC system. Changes in the existing building HVAC system can also be tied into the building addition for the new clarifier proposed to be placed west of the filters.

The existing building boiler, located in the high service pump station area, is over twenty years old and is not of a large enough size for efficient heating of all of the building's interior space. It is proposed to abandon and remove this hot water circulation equipment and provide a new forced-air heating system to service the entire facility. During design we would also recommend evaluating the condition and capacity of the existing dehumidifier in the filter pipe gallery. This unit should probably be replaced, along with the addition of new dehumidifiers in other mechanical spaces of the building, when the new clarifier facility is constructed.

4.19 CIVIL SITE AND PLANT ACCESS IMPROVEMENTS

As previously shown in Figures 4-8 and 4-9, the proposed location for the new IFCF and Clarifier Building will necessitate changes in the general access and plant driveway facilities. These changes will require that the facility roadways be routed further to the north and west. The geotechnical borings do not show the presence of lime sludge deposits in these areas proposed for the revised driveway alignments. Regrading and road construction in this area should be feasible, utilizing proper compaction techniques.

The site will also require modifications to existing grading patterns to direct runoff to appropriate locations and stormwater collection and disposal. The north side of the facility will continue to drain down to the river. Similarly, the parking area on the south side (front) of the building will be split: the eastern portion will drain to the east into the grassy area on the east side of the facility; and the western portion will be graded to drain to the west and into the grassy area on the west side of the plant.

Drainage and grading will be developed for the new reservoir and HSPS facilities sited on the east side of 16th street.

Section 5

SECTION 5

CONSTRUCTION PHASING PLAN & COST OPINIONS

5.1 INTRODUCTION

Implementing the modifications and additions to the Minot WTP necessary for treatment of the new Lake Sakakawea pretreated water supply requires a phased construction approach to meet the growing water supply needs of the participants and to match the financial and service area constraints of the NAWS project. These project needs are best met by staging the overall project into three (3) construction phases, as follows:

- **Minot WTP Phase 1 Improvements Project**. Using the current Minot WTP groundwater supplies, construct a new reservoir and High Service Pump Station (HSPS) facility to provide 18 mgd of treated water service capacity to the City of Minot and a limited number of NAWS contract users.
- **Minot WTP Phase 2 Improvements Project**. Transition to the new Lake Sakakawea surface water supply source and construct high-priority plant modifications to improve plant reliability at 18 mgd maximum flow.
- **Minot WTP Phase 3 Improvements Project**. Using the new Lake Sakakawea surface water supply source, construct lower-priority plant modifications to improve plant reliability and construct the plant expansion modification to treat the peak day NAWS project flow of 26 mgd.

The major components of each of these three phases are presented below including the engineer's current (2005) opinion of probable construction costs. These components were initially discussed in the May 2004 Minot Water Treatment Plant Predesign Evaluation Audit. Further refinement of phasing, actual modifications and integration between phases will be developed during the detailed design of the plant improvements.

Opinion of Total Construction Costs and Total Project Costs. The associated cost opinions were initially developed in May 2004 at an ENR Construction Price Index (CPI) value of 7064. These costs have been increased by approximately 5.9 percent to reflect the current, August 2005 ENR CPI index of 7478. The cost opinions have not been escalated to account for the actual timing of each construction phase. The total construction cost opinions include a 10 percent estimating and construction contingency. The total project cost opinions include an estimate of the costs of final design engineering, construction management services (CMS), and the Owner administration costs.

The cost opinions have been prepared for guidance in project evaluation and implementation from the level of design and market information available at this time (August, 2005). The final project costs will depend upon actual labor and material costs, actual site conditions, actual competitive market conditions, and the final project schedule and scope of work. As a result, the final project costs will vary from the cost opinion presented, and budgeted funding requirements should be carefully reviewed prior to making specific financial decisions and establishing final budgets.

5.2 MINOT WTP PHASE 1 IMPROVEMENTS PROJECT

Construct New Reservoir / HSPS Facility to 18-mgd Capacity. The recommended first phase modification to the Minot WTP facility is to construct a new reservoir and High Service Pump Station (HSPS) facility on the City-owned property located on the east side of 16th Street. New high service pumping systems are necessary for delivering finished water to the existing City's pressure zones, as well as to the anticipated NAWS water users. Siting this new reservoir / HSPS on the east side of 16th street also allows for installation of a new UV disinfection system utilizing either low pressure or medium pressure reactors, at this facility during the Phase 2 Improvements Project.

Other main improvements and or new facilities recommended as part of the Phase 1 Improvements Project include:

- **New 13.8 kV Electrical Service**. New overhead or underground service routed from the existing main overhead electrical service (located to the west of the plant) across 16th street to the new transformer area.
- **New 2.0 to 2.3 MW, 13.8 kV to 4,160 VAC Transformer(s)**. 1 or 2 units to feed to all vertical turbine pumps (and switchgear and MCC / starters.
- **New 0.3 to 0.4 MW, 13.8 kV to 480 VAC Transformer(s)**. 2 units to feed 2 smallest 100 HP pumps, UV reactors, and other miscellaneous loads.
- **New 1.0 MW Emergency Back-up Engine Generator**. To operate approximately half of the high-service pumps, as required by North Dakota DOH for minimum average day demand. The plant's existing emergency generator will continue to be used for all equipment in the main plant building.
- **New 42-inch Filtered Water Pipeline**. Jack and bore underneath 16th Street to new reservoir site.
- **New potable Water Transmission Piping**. Two new pipelines (24-inch and 30-inch) to connect to existing City transmission mains and the new NAWS distribution system.
- **Backwash Pump Replacement**. Replace the single existing backwash pump with 2 new backwash pumps sized to meet the new backwash rates for the new filter media. (New media installed as part of Phase 2 Improvements Project.)

One of the most critical components in the existing plant which requires immediate attention is the single existing backwash pump. This pump is over 50 years old, has severe seal leakage problems, and will also be undersized for the backwash requirements of the future filters with new media. Given that this pump has no standby unit, demolition of this existing pump and replacement with two new backwash pumps (1 duty + 1 standby) should be considered high priority. Also, work on these backwash pumps in the sub-basement coordinate well with the other piping and new clearwell penetration work required in this area.

Table 5-1 provides the preliminary design cost opinion for the Phase 1 construction project.

TABLE 5-1

CONSTRUCTION COST OPINION FOR PHASE 1 IMPROVEMENTS PROJECT

PHASE 1 CONSTRUCTION COMPONENTS	2005 COST OPINION*
1. New 1.0 MG Clearwell & Lower Mechanical Room	$1,800,000
2. New 7,600 sf HSPS and Electrical Building (upper level only) at $140/sf (includes HVAC, building electrical; Excludes pump & surge facilities, process equipment, piping, and I&C)	$1,060,000
3. New HSPS Mechanical w/ Surge Tanks, (includes vertical pumps w/ space for 5th future pump on NAWS facilities)	$1,200,000
4. New 24-inch TW transmission line interconnection pipeline	$60,000
5. New 30-inch Minot potable line from HSPS to new intertie	$30,000
6. New 42-inch clearwell penetration and sub-basement piping	$100,000
7. New 42-inch FW yard piping and 16th Street crossing (Jack & Bore) to New Clearwell / HSPS	$350,000
8. New 36-inch NAWS potable line from HSPS to north edge of Minot WTP property (prior to river crossing)	$100,000
9. New high voltage 13.8 kV service to HSPS transformer area	Cost not included.
10. 1 New 2.0 to 2.3 MVA, 13.8 kV to 4,160 VAC Pad Transformer & 1 New 0.3 to 0.4 MVA 13.8 kV to 480 V Pad Mount Transformer	$120,000
11. New 5 kV Switchgear, MCC and soft starters for 8 pumps	$480,000
12. Backup 1.0 MW Generator for HSPS and associated Switchgear (run ~ half of total pump load)	$500,000
13. Demolish existing HSPS Equipment and Piping (after new clearwell and PS is operational)	$60,000
14. Replace 36" filter inlet channel tee and modify piping as necessary	$100,000
15. Electrical Sitework / General	$350,000
16. Civil / Sitework (includes paving new access road to HSPS)	$400,000
17. 2 New end-suction Backwash Pumps w/valves & piping; Demo existing pump and valves and necessary piping	$300,000
18. Instrumentation and SCADA Improvements (include new LCP for BW pumps)	$350,000
Phase 1 Subtotal of Construction Cost Opinion *	**$7,360,000**
Construction Contingency at 10%	$740,000
Phase 1 Total Construction Cost Opinion**	**$8,100,000**
Project Eng., CMS Service's, Client Admin. At 18%	$1,460,000
Phase 1 Total Project Cost Opinion	**$9,560,000**

*Cost Opinions include Contractor's mob/demob. costs, administration costs, insurance, and bonding costs.
**Costs do not include project engineering, construction management services, nor Owner's administration costs.
All costs are in 2005 dollars and are not escalated to reflect costs at actual time of construction.

The estimated Phase 1 total construction cost opinion is $8,100,000 (in 2005 dollars). The estimated Phase 1 total project cost opinion is $9,560,000 (in 2005 dollars).

5.3 MINOT WTP PHASE 2 IMPROVEMENTS PROJECT

High-Priority Plant Modifications to Treat Lake Sakakawea Water to 18-mgd Capacity. Phase 2 improvements are focused on high-priority modifications to the existing Minot WTP necessary to receive and treat Lake Sakakawea water up to a capacity of 18 mgd. These improvements should be completed in tandem with the final elements of the NAWS pretreated water pipeline and delivery system such that the delivery and treatment system can both be tested after final completion of these plant improvements.

Because the IFCF facilities have been shown to be most efficiently located in the same building as the new 10 mgd clarifier, the entire IFCF and Clarifier building construction is included as part of the Phase 2 project, along with the outer concrete walls of the new clarifier. Actual components of the clarifier mechanism itself can be installed as part of the Phase 3 project.

Other main improvements and or new facilities recommended as part of the Phase 2 project include:

- New UV disinfection system
- New flash mix system w/ centralized coagulation & polymer chemical feed facilities
- New yard piping including 30-inch pretreated water pipe from NAWS
- Filter system improvements. Includes replacement of filter inlet pipes and valves, all filter gallery piping, valves, and actuators; provision of FTW piping and valves, and replacement of filter media, rebuild filter underdrains, and provide air–scour wash modifications
- Add new sodium hypochlorite facility to take advantage of lower chlorine needs on pretreated Lake Sakakawea water
- Equalization basin pumping system improvements and modifications to Souris River pump station
- Demo of existing systems including aeration, chlorine gas, filter piping systems, etc.
- Electrical system / MCC upgrade to entire existing plant building

Table 5-2 provides the preliminary design cost opinion for the Phase 2 construction project.

TABLE 5-2

CONSTRUCTION COST OPINION FOR PHASE 2 IMPROVEMENTS PROJECT

PHASE 2 CONSTRUCTION COMPONENTS	2005 COST OPINION*
1. New UV Disinfection System	$1,100,000
2. New 11,000 sf IFCF & Clarifier Building at $140/sf (includes HVAC, building electrical; Excludes IFCF & process mechanical equipment, piping, clarifiers, and process electrical and I&C)	$1,540,000
3. All subgrade concrete (walls & floor) for IFCF & Clarifier Building	$550,000
4. New Settled Water Channel to Filter Inlet Channel and New IFCF Building Connection Corridor	$200,000
5. New IFCF Bailey Polyjet Sleeve Valve (or equal)	$110,000
6. New IFCF Facilities including Basket Strainers, Flash Mix, Bypass, Inlet 24" Pipe to Clarifier & piping, valves, and Flow Meters	$300,000
7. New IFCF Facility monorail system	$30,000
8. New Centralized Coagulation and Polymer chemical feed facilities for all Clarifiers	$500,000
9. New 30-inch pretreated water pipes to new ICFC inlet and to existing 30-inch raw water line from wells	$250,000
10. Yard pipe connection (new 30-inch pretreated water to exist 30-inch well supply; 1 new buried isolation butterfly valve)	$50,000
11. New 10-inch recycle pipe from EQ basin to new IFCF & Clarifier Bldg	$50,000
12. New elect. actuators on RW valves in existing basement & misc. piping modifications	$50,000
13. Remove existing Aeration towers and associated piping	$50,000
14. Demo existing Chlorine Gas System	$50,000
15. Add new NaOCl liquid storage and feed system	$150,000
16. New 16-inch Filter inlet pipes & isolation valves	$300,000
17. New Filter Media, Underdrains, & and Air Scour Wash Modifications	$1,200,000
18. Filter Gallery Piping, Valves, FTW Improvements	$1,500,000
19. Equalization Basin Improvements (total of 3 new recycle pumps, and 2 new solids pumps, w/valves and piping modifications)	$350,000
20. Civil/Sitework	$500,000
21. Souris River Pump Station Modification to Decant Pump Station	$150,000
22. New MCC and site electrical for new IFCF and Clarifier Bldg	$350,000
23. Sakakawea pretreated RW Quality Monitoring Systems (turbidity, total chlorine, pH, & temp.)	$80,000
24. Instrumentation and SCADA Improvements (New Chemical Feed PLC)	$200,000
Critical Phase 2 Subtotal:	**$9,610,000**

TABLE 5-2 (continued)

CONSTRUCTION COST OPINION FOR PHASE 2 IMPROVEMENTS PROJECT

PHASE 2 CONSTRUCTION COMPONENTS	2005 COST OPINION*
Following Items could potentially be included in Phase 3 Construction depending upon project budgeting needs:	
25. New Filtered Water Turbidity Monitors (replace 12 yr old IFE & CFE turbidimeters with new units, 13 total)	$90,000
26. Electrical System Upgrades to existing MCCs, etc.	$500,000
Phase 2 Subtotal of Construction Cost Opinion *	**$10,200,000**
Construction Contingency at 10%	$1,020,000
Phase 2 Total Construction Cost Opinion **	**$11,220,000**
Project Eng., CMS Service's, Client Admin. At 18%	$2,020,000
Phase 2 Total Project Cost Opinion	**$13,240,000**

*Cost Opinions include Contractor's mob/demob costs, administration costs, insurance, and bonding costs.
**Costs do not include project engineering, construction management services, nor Owner's administration costs.
All costs are in 2005 dollars and are not escalated to reflect costs at actual time of construction.

The estimated Phase 2 total construction cost opinion is $11,220,000 (in 2005 dollars). The estimated Phase 2 total project cost opinion is $13,240,000 (in 2005 dollars). If necessary for financial budgeting reasons, it is possible that the following major items could be delayed or constructed as part of Phase 1 or Phase 3 projects:

- **Move UV Irradiation System to Phase 1**. Approximately $1.1 million could be eliminated from the Phase 2 budget by moving the UV system installation to Phase 1. One possible disadvantage of this shift is that efficiencies in UV technologies are emerging and it may be advantageous from a system / energy efficiency perspective to wait and install this system as part of the Phase 2 project.
- **Move Some Filter Improvements to Phase 3.** Items 15 and 16 (new filter inlet piping and valving along with new media, underdrains, and air scour wash modifications) could possibly be moved to the Phase 3 project, reducing the Phase 2 project cost by approximately $1.5 million. This would mean that 11 of the existing filters with the existing media would need to operate at 3.1 gpm/sf (with one filter in backwash) to reach the 18 mgd peak capacity. One problem with separating this filter work into two phases is that the filters would have to be taken down at two different times, resulting in more operational difficulties and added construction costs.
- **Move Electrical System Improvements and new Filtered Water Turbidimeters to Phase 3.** The plants turbidimeters on individual filter effluent lines are presently 12 years old and should be replaced prior to running the filters at higher loading rates anticipated in the future. The instrument replacement could be postponed until the

Phase 3 project. Although not ideal, it is possible that the upgrade of the plants main MCC / electrical area, with new electrical equipment, could also be postponed until the Phase 3 project.

5.4 MINOT WTP PHASE 3 IMPROVEMENTS PROJECT

Low-Priority Plant Modifications and Plant Expansion to 26-mgd Capacity. Phase 3 will expand the plant to the 26-mgd capacity and also integrate all plant systems to provide for the ultimate peak day 26-mgd NAWS project flows. The additional clarification/softening capacity will be added, all chemical systems integrated for the entire plant including new CO2 feeders and sidestream injection system for all three clarifiers, and one new vertical turbine pumps will be added to the HSPS to provide a firm capacity of 26 mgd.

Other miscellaneous improvements included as part of the Phase 3 project are listed in Table 5-3.

TABLE 5-3

CONSTRUCTION COST OPINION FOR PHASE 3 IMPROVEMENTS PROJECT

PHASE 3 CONSTRUCTION COMPONENTS	2005 COST OPINION*
1. New 10 mgd Conventional Clarifier Mechanism	$800,000
2. New 5-min. Recarbonation Basin accessories for new Clarifier	$200,000
3. New CO_2 Sidestream Injection Systems for all 3 Clarifiers (including removal of existing CO2 diffusers and feeders)	$300,000
4. New Sodium Pryophosphate feed to new Clarifier Effluent	$50,000
5. Modifications to existing Lime Feed system and addition of new recirculating lime slurry system, demo of existing trough systems	$350,000
6. New Mill & misc. Yard Piping (sludge lines, UW lines, etc.)	$100,000
7. Sludge Pumping and Piping Improvements	$70,000
8. Sludge Hauling Washdown Improvements	$100,000
9. Wellfield Improvements for Reliable Backup Supply	$300,000
10. Building HVAC System Improvements	$250,000
11. Add 1 new NAWS HS vertical turbine pump and misc. I&C to HSPS	$160,000
12. Civil/Sitework	$100,000
13. Electrical equip. for new Clarifier and Chemical Feed Equipment only	$200,000
14. Additional Administrative & Work Space for WTP	$250,000
15. Structural Improvements to Existing Buildings	$250,000
16. Instrumentation and SCADA Improvements	$150,000
Phase 3 Subtotal of Construction Cost Opinion *	**$3,630,000**
Construction Contingency at10%	$370,000
Phase 3 Total Construction Cost Opinion **	**$4,000,000**
Project Eng., CMS Service's, Client Admin. at 18%	$720,000
Phase 3 Total Project Cost Opinion	**$4,720,000**

TOTAL CONSTRUCTION COST OPINION FOR PHASES 1, 2 & 3:	**$23,320,000**

TOTAL PROJECT COST OPINION FOR PHASES 1, 2 & 3:	**$27,520,000**

*Cost Opinions does include Contractor's mob/demob costs, administration costs, insurance, and bonding costs.
**Costs do not include project engineering, construction management services, nor Owner's administration costs.
All costs are in 2005 dollars and are not escalated to reflect costs at actual time of construction.

The estimated Phase 3 total construction cost opinion is $4,000,000 (in 2005 dollars). The estimated Phase 3 total project cost opinion is $4,720,000 (in 2005 dollars). The estimated total construction cost opinion is $23,320,000 (in 2005 dollars) for all three project phases, and the total project cost opinion is $27,520,000 (in 2005 dollars).

5.5 ANNUAL WTP OPERATIONS COSTS

The current 2005 annual operating budget for the Minot WTP and parts of the City's distribution system is approximately $3.51 million per year based on an average annual flow of 6.3 mgd. The unit cost of treated water delivered to the City is therefore about $1,530 per million gallons or $1.53 per thousand gallons. The only items in the Operations and Maintenance (O&M) budget that are expected to be significantly affected by the switch to the Missouri River supply are chemical use, sludge dewatering and disposal costs, and electricity. Table 5-4 provides a summary of these Operations costs on the current groundwater supply and on the new surface water supply from Lake Sakakawea. These Operations costs do not include the actual salary cost for plant Operators and the Superintendent.

For the current total O&M budget of about $3.51 million/year, these three operations cost categories account for about 33 percent of this budget. Approximately $934,000/year of the costs are associated with chemical purchase and sludge dewatering and disposal costs, and the remaining $224,000/year of costs are associated with plant electrical costs (including raw water pumping).

Table 5-4 shows that significant chemical and sludge handling & disposal cost savings will be realized at the WTP as a result of the improved raw water quality of the Lake Sakakawea supply. Net annual savings for these three categories are approximately as follows:

- **Chemical Usage:** Savings of $300,000 per year.
- **Sludge Dewatering and Disposal:** Savings of $190,000 per year.
- **Electricity:** Savings of $69,000 per year. (excludes cost to pump raw water from Lake Sakakawea).

The most significant cost savings at the WTP compared to the current supply will result from substantially lower lime dose requirements, and the resultant lower volumes of sludge generated which require dewatering, hauling, and disposal. Other cost savings are anticipated with lower carbon dioxide doses, lower chlorine and ammonia doses (pretreatment will add significant chlorine and ammonia to meet NAWS disinfection goals), elimination of potassium permanganate (Souris River will no longer be used), and lower dosage for sodium silicofluoride due to the presence of background concentrations of fluoride in Missouri River water.

Electrical cost savings will be mostly due to the fact that groundwater pumping will no longer be necessary (except as emergency backup). Also, some additional electricity savings are expected from the higher efficiencies of the new finished water vertical turbine pumps, as compared to the 55 year old existing split-case horizontal pumps.

Finally, it should be noted that there will be other chemical, electricity and O&M costs considerations associated with pretreating and pumping the raw Lake Sakakawea supply to the Minot WTP. These costs for pretreating and pumping the Lake Sakakawea water to the WTP are not considered as part of this WTP evaluation. Those cost analyses are summarized in other elements of the NAWS planning effort.

TABLE 5-4

MINOT WTP IMPROVEMENTS PROJECT
COMPARISON OF WTP OPERATIONS COSTS ON CURRENT GW SUPPLY VS. FUTURE SAKAKAWEA SUPPLY*
(For Avg Annual Flow of: 6.3 mgd)

Chemicals	Unit Costs (1)		Average Dose (mg/L)		Annual Cost ($/yr)	
			Current GW	Sakakawea	Current GW	Sakakawea
Primary Coagulant (Alum Blend)	$0.34	$/lb (2)	3.5	5.0	$22,800	$32,600
Floc Aid Polymer (Anion/Nonionic)	$1.85	$/lb (2)	0.07	0.10	$2,400	$3,500
Lime (as CaO)	$76	$/ton CaO	430	130	$313,300	$94,700
Tetra-Sodium Pyrophosphate ($1.25/lb at 69%)	$1.81	$/lb PO_4	1.5	1.5	$52,000	$52,000
Carbon Dioxide	$93	$/ton CO_2 (2)	50	35	$44,500	$31,200
Chlorine Gas	$621	$/ton Cl_2 (2)	10.3	0.0	$61,300	$0
Sodium Hypochlorite ($1.2/gal at 12.5%)	$1.20	$/lb Cl_2	0.0	1.5	$0	$34,500
Ammonium Sulfate ($0.28/lb at 24%)	$1.17	$/lb NH_3	2.5	0.5	$56,000	$11,200
Sodium Silicofluoride ($0.34/lb at 74%)	$0.46	$/lb F	1.9	1.0	$16,700	$8,800
				Subtotal:	**$569,000**	**$268,500**

(1) Bulk unit costs provided by js at plant - 8-05-05
(2) Pure bulk chemical, 100% purity

Sludge Handling & Disposal	Unit Costs		Dewatered Cake Prod. (tons/yr)		Annual Cost ($/yr)	
			Current GW	Sakakawea	Current GW	Sakakawea
P&F Press Dewatering Costs	$7.45	$/ton	19,100	4,800	$142,200	$35,700
Cake Hauling to Landfill	$3.65	$/ton	19,100	4,800	$69,700	$17,500
Landfill Tipping Fee (Unlined Cell)	$8.00	$/ton	19,100	0	$152,800	$0
Landfill Tipping Fee (Lined Cell)	$25.30	$/ton	0	4,800	$0	$121,400
				Subtotal:	**$364,700**	**$174,600**

Electricity & Misc.	Unit Costs		Avg. Energy Use (kwh/yr)		Annual Cost ($/yr)	
			Current GW	Sakakawea	Current GW	Sakakawea
Plant Misc. Elect (Est. 50 kw)	$0.05	$/kwh	438,000	438,000	$21,900	$21,900
Groundwater Pumping (Est. e=0.70 overall)	$0.05	$/kwh	1,192,300	0	$59,600	$0
Split Case FW Pumps (Est. e=0.65 overall)	$0.05	$/kwh	2,853,500	0	$142,600	$0
Vert. Turbine FW Pumps (Est. e=0.77 overall)	$0.05	$/kwh	0	2,408,800	$0	$120,400
UV Disinfection (LP reactors at 32 mJ/cm2)	$2,000	$/mgd/yr	-	-	$0	$12,600
(Includes maint. on reactors & replacement parts)				**Subtotal:**	**$224,100**	**$154,900**

SUBTOTAL ANNUAL OPERATIONS COSTS*:	**$1,157,800**	**$598,000**

* Does not include Operator's salary & OH Costs nor equipment maintenance costs

Appendix A

MINOT WTP IMPROVEMENTS PROJECT
Filter Backwash, EQB and FTW Calculations

(Phase 1 Flow Conditions - 18 mgd Max Day - UFRV = 10,000 gal/sf)

Filtration Operations Parameters

		Minimum	Average	Maximum
		Filter Operations Data (Inputs)		
Plant Flow Condition:				
Daily Flow Value:	mgd	5.0	6.3	18.0
Average Filter Size:	sf	360	360	360
Average Unit Filter Run Volume (UFRV):	gal/sf	10,000	10,000	10,000
Total No. of Filters:	#	12	12	12
No Filters Operating at Given Flow:	#	4	4	10
		Filter Operations Data (Outputs)		
Nominal Filter Surface Loading Rate:	gpm/sf	2.4	3.0	3.5
Average Flow Per Filter:	mgd/filter	1.25	1.58	1.80
Average Flow Per Filter:	gpm/filter	868	1094	1250
Average Filter Run Time:	hours	69.1	54.9	48.0
Filtration Efficiency 100*(UVRV-UBWV)/UVRV	%	98.1	98.0	97.9
Number of Backwashes per Day:	#/day	1.4	1.7	5.0
Maximum Time between Backwashes:	hours	17.3	13.7	4.8

Filter Backwash Data (Inputs)

	(Inputs)		
Surface Wash Duration:	3.0	minutes	
Surface Wash Rate:	0.7	gpm/sf	(0.5 to 0.7 gpm/sf for rotating arm type; per Kawamura - pg. 233)
Backwash Duration:	7.0	minutes	
Backwash Rate:	20.0	gpm/sf	(For design media, ~19 gpm/sf @ 20C, use 20 gpm/sf as conservative value.)
Filter-to-Waste (FTW) Duration:	20.0	minutes	

		Wash & Waste Volumes (Outputs)		
Avg. Surface Wash Volume:	gal/filter-wash	756	756	756
Avg. Backwash Volume:	gal/filter-wash	50,400	50,400	50,400
Avg FTW Volume (assumes FTW rate same as nominal SLR):	gal/filter-wash	17,360	21,870	24,990
Unit Backwash Volume (UBWV) (includes FTW volume)	gal/sf	190	203	212

EQ Basin Water Sources		Vol. to Clean Side of EQ Basin (GPD to Recycle)			Vol. to Dirty Side of EQ Basin (GPD to Thickeners)		
		Min Flow	Avg Flow	Max Flow	Min Flow	Avg Flow	Max Flow
Filter Surface Wash Volumes Generated:	gpd	0	0	0	1,040	1,320	3,770
Filter Backwash Volumes Generated:	gpd	48,990	61,730	176,380	20,990	26,450	75,590
% of BW Diverted to Dirty EQ Basin (to Thickener) (Inputs): 30	% (manual control by Operator)						
% of BW Diverted to Clean EQ Basin (to Recycle): 70	% (manual control by Operator)						
Filter-to-Waste (FTW) Volumes Generated:	gpd	24,111	38,279	124,991	0	0	0
Supernatent Return Flow from Thickener to Clean EQ Basin:	gpd	20,990	26,450	75,590	NA	NA	NA
DAILY TOTAL VOLUMES:	gpd	**94,091**	**126,459**	**376,961**	**20,990**	**26,450**	**75,590**
Pump Sizing: Equalization Basin to Thickener							
Pumping Rate to move Daily Total Vol. in 8 hours:	gpm				44	55	157
Pumping Rate to move Daily Total Vol. in 24 hours:	gpm				15	18	52
Pumping Rate to move 30% of 1 BW out in 1 hour:	gpm				256	256	256
RW Pump Sizing: Equalization Basin to Recycle at IFC							
Pumping Rate to move Daily Total Vol. in 8 hours:	gpm	196	263	785			
Pumping Rate to move Daily Total Vol. in 24 hours:	gpm	65	88	262			
Pumping Rate to move 100% of 1 BW+FTW out in 1 hour:	gpm	1,142	1,217	1,269			
Drain 822,000 gal (76' x 76' x 19') Walker Clarifie							
Drain entire clarifier vol in 48 hrs to Eq. Basin:	gpm	285	285	285			

Existing Equalization Basin Size (105,000 total gal.)

	(Inputs)	
Equalization Basin; Dirty Side Volume:	24,000	gal (~173 sf surface area x 18.5 ft working depth)
Equalization Basin; Clean Side Volume:	81,500	gal (~588 sf surface area x 18.5 ft working depth)

Total Dirty Vol. per Backwash to Dirty EQ Basin:	15,876	gal/backwash (water routed to Thickeners)
Total Clean Vol. per Backwash & FTW to Clean EQ Basin	52,640	gal/backwash (water routed to Recycle, includes FTW volume)
	(Outputs)	
No. of Backwashes Stored in Dirty EQ Basin (2):	1.51	(typ for backwash Eq. Basin to store 2 to 3 backwashes/day (per Qasim and Kawamura)
No. of Backwashes + FTW Stored in Clean EQ Basin (2):	1.55	(typ for backwash Eq. Basin to store 2 to 3 backwashes/day (per Qasim and Kawamura)

MINOT WTP IMPROVEMENTS PROJECT
Filter Backwash, EQB and FTW Calculations

(Phase 3 Flow Conditions - 26 mgd Max Day; UFRV = 5,000 gal/sf)

Filtration Operations Parameters

		Filter Operations Data (Inputs)		
		Minimum	Average	Maximum
Plant Flow Condition:				
Daily Flow Value:	mgd	5.0	10.5	26.0
Average Filter Size:	sf	360	360	360
Average Unit Filter Run Volume (UFRV):	gal/sf	5,000	5,000	5,000
Total No. of Filters:	#	12	12	12
No Filters Operating at Given Flow:	#	4	6	12

		Filter Operations Data (Outputs)		
Nominal Filter Surface Loading Rate:	gpm/sf	2.4	3.4	4.2
Average Flow Per Filter:	mgd/filter	1.25	1.75	2.17
Average Flow Per Filter:	gpm/filter	868	1215	1505
Average Filter Run Time:	hours	34.6	24.7	19.9
Filtration Efficiency 100*(UVRV-UBWV)/UVRV	%	96.2	95.8	95.5
Number of Backwashes per Day:	#/day	2.8	5.8	14.4
Maximum Time between Backwashes:	hours	8.6	4.1	1.7

Filter Backwash Data (Inputs)

	(Inputs)		
Surface Wash Duration:	3.0	minutes	
Surface Wash Rate:	0.7	gpm/sf	(0.5 to 0.7 gpm/sf for rotating arm type; per Kawamura - pg. 233)
Backwash Duration:	7.0	minutes	
Backwash Rate:	20.0	gpm/sf	(For design media, ~19 gpm/sf @ 20C, use 20 gpm/sf as conservative value.)
Filter-to-Waste (FTW) Duration:	20.0	minutes	

		Wash & Waste Volumes (Outputs)		
Avg. Surface Wash Volume:	gal/filter-wash	756	756	756
Avg. Backwash Volume:	gal/filter-wash	50,400	50,400	50,400
Avg FTW Volume (assumes FTW rate same as nominal SLR):	gal/filter-wash	17,360	24,300	30,090
Unit Backwash Volume (UBWV) (includes FTW volume)	gal/sf	190	210	226

EQ Basin Water Sources

			Vol. to Clean Side of EQ Basin (GPD to Recycle)			Vol. to Dirty Side of EQ Basin (GPD to Thickeners)		
			Min Flow	Avg Flow	Max Flow	Min Flow	Avg Flow	Max Flow
Filter Surface Wash Volumes Generated:		gpd	0	0	0	2,090	4,400	10,910
Filter Backwash Volumes Generated:	(Inputs)	gpd	97,990	205,780	509,560	41,990	88,190	218,380
% of BW Diverted to Dirty EQ Basin (to Thickener)	30	% (manual control by Operator)						
% of BW Diverted to Clean EQ Basin (to Recycle)	70	% (manual control by Operator)						
Filter-to-Waste (FTW) Volumes Generated:		gpd	48,222	141,772	434,640	0	0	0
Supernatent Return Flow from Thickener to Clean EQ Basin:		gpd	41,990	88,190	218,380	NA	NA	NA
DAILY TOTAL VOLUMES:		gpd	**188,202**	**435,742**	**1,162,580**	**41,990**	**88,190**	**218,380**
Pump Sizing: Equalization Basin to Thickener								
Pumping Rate to move Daily Total Vol. in 8 hours:		gpm				87	184	455
Pumping Rate to move Daily Total Vol. in 24 hours:		gpm				29	61	152
Pumping Rate to move 30% of 1 BW out in 1 hour:		gpm				256	256	256
RW Pump Sizing: Equalization Basin to Recycle at IFC								
Pumping Rate to move Daily Total Vol. in 8 hours:		gpm	392	908	2422			
Pumping Rate to move Daily Total Vol. in 24 hours:		gpm	131	303	807			
Pumping Rate to move 100% of 1 BW+FTW out in 1 hour:		gpm	1,142	1,258	1,354			
Drain 822,000 gal (76' x 76' x 19') Walker Clarifier								
Drain entire clarifier vol in 48 hrs to Eq. Basin:		gpm	285	285	285			

Existing Equalization Basin Size (105,000 total gal.)

	(Inputs)		
Equalization Basin; Dirty Side Volume:	24,000	gal	(~173 sf surface area x 18.5 ft working depth)
Equalization Basin; Clean Side Volume:	81,500	gal	(~588 sf surface area x 18.5 ft working depth)
Total Dirty Vol. per Backwash to Dirty EQ Basin:	15,876	gal/backwash	(water routed to Thickeners)
Total Clean Vol. per Backwash & FTW to Clean EQ Basin	52,640	gal/backwash	(water routed to Recycle, includes FTW volume)
	(Outputs)		
No. of Backwashes Stored in Dirty EQ Basin (2):	1.51		(typ for backwash Eq. Basin to store 2 to 3 backwashes/day (per Qasim and Kawamura)
No. of Backwashes + FTW Stored in Clean EQ Basin (2):	1.55		(typ for backwash Eq. Basin to store 2 to 3 backwashes/day (per Qasim and Kawamura)

MINOT WTP IMPROVEMENTS PROJECT
Filter Backwash, EQB and FTW Calculations

(Phase 1 Flow Conditions - 18 mgd Max Day - UFRV = 5,000 gal/sf)

Filtration Operations Parameters

		Minimum	Average	Maximum
		Filter Operations Data (Inputs)		
Plant Flow Condition:				
Daily Flow Value:	mgd	5.0	6.3	18.0
Average Filter Size:	sf	360	360	360
Average Unit Filter Run Volume (UFRV):	gal/sf	5,000	5,000	5,000
Total No. of Filters:	#	12	12	12
No Filters Operating at Given Flow:	#	4	4	10
		Filter Operations Data (Outputs)		
Nominal Filter Surface Loading Rate:	gpm/sf	2.4	3.0	3.5
Average Flow Per Filter:	mgd/filter	1.25	1.58	1.80
Average Flow Per Filter:	gpm/filter	868	1094	1250
Average Filter Run Time:	hours	34.6	27.4	24.0
Filtration Efficiency 100*(UVRV-UBWV)/UVRV	%	96.2	95.9	95.8
Number of Backwashes per Day:	#/day	2.8	3.5	10.0
Maximum Time between Backwashes:	hours	8.6	6.9	2.4

Filter Backwash Data (Inputs)

	(Inputs)		
Surface Wash Duration:	3.0	minutes	
Surface Wash Rate:	0.7	gpm/sf	(0.5 to 0.7 gpm/sf for rotating arm type; per Kawamura - pg. 233)
Backwash Duration:	7.0	minutes	
Backwash Rate:	20.0	gpm/sf	(For design media, ~19 gpm/sf @ 20C, use 20 gpm/sf as conservative value.)
Filter-to-Waste (FTW) Duration:	20.0	minutes	

		Wash & Waste Volumes (Outputs)		
Avg. Surface Wash Volume:	gal/filter-wash	756	756	756
Avg. Backwash Volume:	gal/filter-wash	50,400	50,400	50,400
Avg FTW Volume (assumes FTW rate same as nominal SLR):	gal/filter-wash	17,360	21,870	24,990
Unit Backwash Volume (UBWV) (includes FTW volume)	gal/sf	190	203	212

EQ Basin Water Sources

			Vol. to Clean Side of EQ Basin (GPD to Recycle)			Vol. to Dirty Side of EQ Basin (GPD to Thickeners)		
			Min Flow	Avg Flow	Max Flow	Min Flow	Avg Flow	Max Flow
Filter Surface Wash Volumes Generated:		gpd	0	0	0	2,090	2,640	7,550
Filter Backwash Volumes Generated:	(Inputs)	gpd	97,990	123,470	352,770	41,990	52,910	151,190
% of BW Diverted to Dirty EQ Basin (to Thickener)	30	% (manual control by Operator)						
% of BW Diverted to Clean EQ Basin (to Recycle)	70	% (manual control by Operator)						
Filter-to-Waste (FTW) Volumes Generated:		gpd	48,222	76,557	249,982	0	0	0
Supernatent Return Flow from Thickener to Clean EQ Basin:		gpd	41,990	52,910	151,190	NA	NA	NA
DAILY TOTAL VOLUMES:		gpd	**188,202**	**252,937**	**753,942**	**41,990**	**52,910**	**151,190**
Pump Sizing: Equalization Basin to Thickener								
Pumping Rate to move Daily Total Vol. in 8 hours:		gpm				87	110	315
Pumping Rate to move Daily Total Vol. in 24 hours:		gpm				29	37	105
Pumping Rate to move 30% of 1 BW out in 1 hour:		gpm				256	256	256
RW Pump Sizing: Equalization Basin to Recycle at IFC								
Pumping Rate to move Daily Total Vol. in 8 hours:		gpm	392	527	1571			
Pumping Rate to move Daily Total Vol. in 24 hours:		gpm	131	176	524			
Pumping Rate to move 100% of 1 BW+FTW out in 1 hour:		gpm	1,142	1,217	1,269			
Drain 822,000 gal (76' x 76' x 19') Walker Clarifier								
Drain entire clarifier vol in 48 hrs to Eq. Basin:		gpm	285	285	285			

Existing Equalization Basin Size (105,000 total gal.)

	(Inputs)	
Equalization Basin; Dirty Side Volume:	24,000	gal (~173 sf surface area x 18.5 ft working depth)
Equalization Basin; Clean Side Volume:	81,500	gal (~588 sf surface area x 18.5 ft working depth)
Total Dirty Vol. per Backwash to Dirty EQ Basin:	15,876	gal/backwash (water routed to Thickeners)
Total Clean Vol. per Backwash & FTW to Clean EQ Basin	52,640	gal/backwash (water routed to Recycle, includes FTW volume)
	(Outputs)	
No. of Backwashes Stored in Dirty EQ Basin (2):	1.51	(typ for backwash Eq. Basin to store 2 to 3 backwashes/day (per Qasim and Kawamura)
No. of Backwashes + FTW Stored in Clean EQ Basin (2):	1.55	(typ for backwash Eq. Basin to store 2 to 3 backwashes/day (per Qasim and Kawamura)

MINOT WTP IMPROVEMENTS PROJECT
Filter Backwash, EQB and FTW Calculations

(Phase 3 Flow Conditions - 26 mgd Max Day; UFRV = 10,000 gal/sf)

Filtration Operations Parameters

		Filter Operations Data (Inputs)		
		Minimum	Average	Maximum
Plant Flow Condition:				
Daily Flow Value:	mgd	5.0	10.5	26.0
Average Filter Size:	sf	360	360	360
Average Unit Filter Run Volume (UFRV):	gal/sf	10,000	10,000	10,000
Total No. of Filters:	#	12	12	12
No Filters Operating at Given Flow:	#	4	6	12

		Filter Operations Data (Outputs)		
Nominal Filter Surface Loading Rate:	gpm/sf	2.4	3.4	4.2
Average Flow Per Filter:	mgd/filter	1.25	1.75	2.17
Average Flow Per Filter:	gpm/filter	868	1215	1505
Average Filter Run Time:	hours	69.1	49.4	39.9
Filtration Efficiency 100*(UVRV-UBWV)/UVRV	%	98.1	97.9	97.7
Number of Backwashes per Day:	#/day	1.4	2.9	7.2
Maximum Time between Backwashes:	hours	17.3	8.2	3.3

Filter Backwash Data (Inputs)

	(Inputs)		
Surface Wash Duration:	3.0	minutes	
Surface Wash Rate:	0.7	gpm/sf	(0.5 to 0.7 gpm/sf for rotating arm type; per Kawamura - pg. 233)
Backwash Duration:	7.0	minutes	
Backwash Rate:	20.0	gpm/sf	(For design media, ~19 gpm/sf @ 20C, use 20 gpm/sf as conservative value.)
Filter-to-Waste (FTW) Duration:	20.0	minutes	

		Wash & Waste Volumes (Outputs)		
Avg. Surface Wash Volume:	gal/filter-wash	756	756	756
Avg. Backwash Volume:	gal/filter-wash	50,400	50,400	50,400
Avg FTW Volume (assumes FTW rate same as nominal SLR):	gal/filter-wash	17,360	24,300	30,090
Unit Backwash Volume (UBWV) (includes FTW volume)	gal/sf	190	210	226

EQ Basin Water Sources

			Vol. to Clean Side of EQ Basin (GPD to Recycle)			Vol. to Dirty Side of EQ Basin (GPD to Thickeners)		
			Min Flow	Avg Flow	Max Flow	Min Flow	Avg Flow	Max Flow
Filter Surface Wash Volumes Generated:		gpd	0	0	0	1,040	2,200	5,450
Filter Backwash Volumes Generated:	(Inputs)	gpd	48,990	102,890	254,780	20,990	44,090	109,190
% of BW Diverted to Dirty EQ Basin (to Thickener)	30	% (manual control by Operator)						
% of BW Diverted to Clean EQ Basin (to Recycle)	70	% (manual control by Operator)						
Filter-to-Waste (FTW) Volumes Generated:		gpd	24,111	70,886	217,320	0	0	0
Supernatent Return Flow from Thickener to Clean EQ Basin:		gpd	20,990	44,090	109,190	NA	NA	NA
DAILY TOTAL VOLUMES:		gpd	**94,091**	**217,866**	**581,290**	**20,990**	**44,090**	**109,190**
Pump Sizing: Equalization Basin to Thickener								
Pumping Rate to move Daily Total Vol. in 8 hours:		gpm				44	92	227
Pumping Rate to move Daily Total Vol. in 24 hours:		gpm				15	31	76
Pumping Rate to move 30% of 1 BW out in 1 hour:		gpm				256	256	256
RW Pump Sizing: Equalization Basin to Recycle at IFC								
Pumping Rate to move Daily Total Vol. in 8 hours:		gpm	196	454	1211			
Pumping Rate to move Daily Total Vol. in 24 hours:		gpm	65	151	404			
Pumping Rate to move 100% of 1 BW+FTW out in 1 hour:		gpm	1,142	1,258	1,354			
Drain 822,000 gal (76' x 76' x 19') Walker Clarifier								
Drain entire clarifier vol in 48 hrs to Eq. Basin:		gpm	285	285	285			

Existing Equalization Basin Size (105,000 total gal.)

	(Inputs)		
Equalization Basin; Dirty Side Volume:	24,000	gal	(~173 sf surface area x 18.5 ft working depth)
Equalization Basin; Clean Side Volume:	81,500	gal	(~588 sf surface area x 18.5 ft working depth)
Total Dirty Vol. per Backwash to Dirty EQ Basin:	15,876	gal/backwash	(water routed to Thickeners)
Total Clean Vol. per Backwash & FTW to Clean EQ Basin	52,640	gal/backwash	(water routed to Recycle, includes FTW volume)
	(Outputs)		
No. of Backwashes Stored in Dirty EQ Basin (2):	1.51		(typ for backwash Eq. Basin to store 2 to 3 backwashes/day (per Qasim and Kawamura)
No. of Backwashes + FTW Stored in Clean EQ Basin (2):	1.55		(typ for backwash Eq. Basin to store 2 to 3 backwashes/day (per Qasim and Kawamura)

Appendix B

United States Department of the Interior

BUREAU OF RECLAMATION
Washington, D.C. 20240

IN REPLY REFER TO:

W-6000

MEMORANDUM

To: Director, Office of Canadian Affairs, Department of State

From: for Larry L. Todd William J. Steele
Director, Operations, Bureau of Reclamation

Subject: Northwest Area Water Supply (NAWS) Project - North Dakota

Attached is a copy of the Secretary of the Interior's determination that adequate treatment will be provided to meet the Boundary Waters Treaty of 1909 as required by the Garrison Diversion Unit Reformulation Act of 1986. In making this decision, the Department of the Interior consulted with the State Department and the Environmental Protection Agency.

We will be in contact with you soon to discuss the next steps in consulting with Canada. If you have questions, please contact me at (202) 513-0615. Thank you for your assistance in moving the NAWS project forward.

Attachment

cc: Diane C. Regas
Office of Water
Environmental Protection Agency
1200 Pennsylvania Avenue N. W.
Mail Code 4101
Washington, D.C. 20460

bc: Acting Chief of Staff Assistant Secretary - Water and Science, Attention: AS/WS
Regional Director, Attention: GP-1000
(Exercising the Commissioner's authority) Attention: W-1000

W-6335, W-6000, W-6300, W-6330, W-6700, PXAO-6000

WBR:TZontek:kjg:01/30/01:(202) 513-0595:#1000184:revised 2/14/01
J:\Doc\nawscom3.wpd

United States Department of the Interior

BUREAU OF RECLAMATION
Washington, D.C. 20240

IN REPLY REFER TO:

U.S. Department of the Interior 1849-1999

MEMORANDUM

To: Secretary

Through: Amy Holley, Acting Chief of Staff
Office of the Assistant Secretary - Water and Science

JAN 19 2001

From: Eluid L. Martinez
Commissioner

Subject: Determination to meet the requirements of the Boundary Waters Treaty of 1909 by providing adequate treatment of water transported from the Missouri River into the Hudson Bay Drainage through the Northwest Area Water Supply (NAWS) Project

The proposed NAWS project is a municipal, rural, and industrial (MR&I) water supply system designed to serve a ten-county area in northwestern North Dakota. Congressional authorization for the project is provided under the MR&I provisions of Public Law 99-294 (the 1986 Garrison Reformulation Act). Project designs call for raw water to be drawn from either Lake Sakakawea or Lake Audubon (adjacent water sources in the Missouri River basin), disinfected, and pumped to the Minot water treatment plant (in the Hudson Bay basin) via buried pipeline. Final treatment would occur at the Minot water treatment plant prior to distribution and consumption within the project service area.

The agencies support the need for the water supply project, and believe that the supplied drinking water should be of high quality and in compliance with all applicable drinking water standards. The project sponsor, the State of North Dakota, will include post-filtration ultraviolet treatment at the Minot water treatment plant beyond existing conventional treatment of pre-treated water.

Since the project involves the transfer of water (and potentially biota) between basins, compliance with conditions of the Boundary Waters Treaty of 1909 (BWT) is a consideration. The BWT forms the basis for consultation between the United States and Canada on transboundary water issues. In summary, the BWT provides that waters flowing across the international boundary shall not be polluted on either side to the injury of health or property on the other.

For several years, the NAWS project has been moving methodically through a complex planning and development process. It has undergone considerable technical review by the United States and Canada since 1993, via the Garrison Consultative Group and the Garrison Joint Technical Committee. Before the project can move ahead to construction, the Federal agencies must

address the provisions of the 1986 Garrison Reformulation Act which require:

> *"Municipal, rural, and industrial water systems constructed with funds authorized under this Act may deliver Missouri River water into the Hudson Bay drainage only after the Secretary of the Interior, in consultation with the Secretary of State, and the Administrator of the Environmental Protection Agency, has determined that adequate treatment has been provided to meet the requirements of the Boundary Waters Treaty of 1909."*

In considering the acceptability of the recommended project design, through consultation with the Environmental Protection Agency (EPA) and the Department of State, we have identified the following guiding principals:

1. Appropriate biota transfer controls should be in place to minimize the potential risk of known or unknown invasive pathogens entering the Hudson Bay basin.

2. The project design should fully comply with the intent of the Boundary Waters Treaty of 1909, and meet the legal requirements of the Garrison Diversion Unit Reformulation Act of 1986.

3. The most cost-effective biota transfer control measures should be used.

4. The requirements for NAWS, a unique project, are specific to that project; the agencies will consider other projects on a case-by-case basis considering their unique qualities to ensure compliance with the Boundary Waters Treaty.

To meet the aforementioned guiding principals, the following features are required for the NAWS project and will be incorporated into its design.

- Raw water from either Lake Sakakawea or Lake Audubon will be disinfected to inactivate 3 logs of Giardia and 4 logs of virus prior to crossing the continental divide.

- Appropriate engineering controls and fail-safe systems will be incorporated (including an appropriate number of automated pipeline isolation valves) to minimize the accidental release of pre-treated water from spills and pipeline breaks in sensitive areas.

- Adequate facility inspection, operation, maintenance, and capital replacement plans to minimize the potential for facility degradation and breakdowns.

- Contingency plans, emergency response procedures, and periodic exercises to address response to accidental releases of water or sludge.

- Adequate controls to contain any accidental spills of recycled backwash or softening clarification supernatant within a covered perimeter of the treatment plant facility, and prevent any release from the site.

- Sludge resulting from the filter backwash and softening clarification processes will be either treated to inactivate disinfectant-resistant pathogens, or transported for disposal at an appropriate disposal facility (preferably within the Missouri River basin).

Determination:

Secretary of the Interior

Date: July 19, 2001

671 E. Riverpark Lane, Suite 200
Boise, Idaho 83706
Phone: 208-345-5865
FAX: 208-345-5897

MWH