FACILITIES INSTRUCTIONS,
STANDARDS, AND TECHNIQUES
VOLUME 4-1A

MAINTENANCE SCHEDULING FOR MECHANICAL EQUIPMENT

Roger Cline

Internet Version of This Manual Created
March 1998

HYDROELECTRIC RESEARCH AND
TECHNICAL SERVICES GROUP

The Appearance of the Internet Version of This Manual May Differ From the Original, but the Contents Do Not

UNITED STATES DEPARTMENT OF THE INTERIOR
BUREAU OF RECLAMATION
DENVER, COLORADO

TABLE OF CONTENTS

(Page numbers reflect placement in the original printed manual
and may not match the Internet version exactly)

Section	*Page*
I. Introduction	1
1.1 Preventive maintenance	1
1.2 Predictive maintenance	2
1.3 Inspection checklists	2
II. Hydraulic turbines, large pumps and auxiliary pumps	3
2.1 Pumps	3
2.2 Hydraulic turbines	8
2.3 Cavitation erosion, abrasive erosion, and corrosion	10
2.4 Wearing rings	14
2.5 Packing/mechanical seals	14
2.6 Bearings	16
2.7 Shaft couplings	17
2.8 Shaft alignment	18
2.9 Vibration monitoring and analysis	30
2.10 Oil and lubricants	33
2.11 Inspection checklist	36
III. Penstocks, outlet pipes, gates, valves, and auxiliary piping systems	47
3.1 Penstocks and outlet pipes	47
3.2 Gates and valves	47
3.3 Guard gate and valve closure tests	73
3.4 Auxiliary piping systems	73
3.5 Inspection checklist	79
IV. Governors	87
4.1 General	87
4.2 Inspection checklist	87
V. Air compressors	95
5.1 General	95
5.2 Reciprocating air compressors	95
5.3 Rotary screw air compressors	95
5.4 Accessories	96
5.5 Inspection checklist	97
VI. Cranes, hoists, rigging equipment, and elevators	103
6.1 Cranes and hoists	103
6.2 Ropes, slings, chains and rigging hardware	103
6.3 Shop fabricated lifting devices and rigging hardware	104
6.4 Elevators	104
6.5 Inspection checklist	104

FIGURES

No.		Page
1	Vertical volute pump	5
2	Two stage vertical turbine pump	6
3	Double suction horizontal volute pump and parts list	7
4	Positive displacement pumps	9
5	Vertical Francis turbine and parts list	11
6	Vertical Kaplan turbine	12
7	Checking indicator bar for sag	20
8	Face and rim alignment method	21
9	Face and rim alignment worksheet	23
10	Face and rim alignment worksheet@xample	24
11	Reverse indicator alignment worksheet	27
12	Reverse indicator alignment worksheet-example	28
13	Reverse indicator alignment graph	29
14	Single spectrum plot	32
15a	Hydroelectric unit, mechanical inspection report (sheet 1 of 2)	42
15b	Hydroelectric unit, mechanical inspection report (sheet 2 of 2)	43
16a	Large pump inspection report (sheet 1 of 2)	44
16b	Large pump inspection report (sheet 2 of 2)	45
17	Common gate and valve arrangements	48
18	Intake arrangements	49
19	Intake arrangements	50
20	Radial gate	52
21	Drum gate	53
22	Slide gate	54
23	Roller-mounted gate (coaster gate)	55
24	Wheel-mounted gate (fixed wheel gate)	56
25	Jet flow gate	58
26	Cylinder g4te	59
27	Ring-follower gate	60
28	Ring seal gate (hydraulically operated)	61
29	Ring seal gate (mechanically operated)	62
30	Bulkhead gate	63
31	STOP logs	64
32	Tube valve	66
33	Hollow-jet valve (mechanically operated)	67
34	Hollow-jet valve (hydraulically operated)	68
35	Butterfly valve	69
36	Rising stem gate hoist	70
37	Twin threaded stem gate boist (noniising stem)	71
38	Chain and sprocket hoist	72
39	Wire rope hoist	74
40	Typical hydraulic hoist system	75
41	Hydraulic hoist (gravity closing guard gate)	76

42 Typical hydraulic hoist system 77
43a Governor inspection report (sheet I of 2) 93
43b Governor inspection report (sheet 2 of 2) 94
44a Overhead crane inspection report (sheet 1 of 2) 109
44b Overhead crane inspection report (sheet 2 of 2) 110

MAINTENANCE SCHEDULING FOR MECHANICAL EQUIPMENT

INTRODUCTION

1.1 Preventive Maintenance

The main reason for setting up a preventive maintenance program is to prevent unscheduled outages from failure of equipment. Depending on the circumstances, an unscheduled outage will be, at least, very inconvenient and can be extremely expensive. A successful program of preventive and routine maintenance will reduce equipment failures, extend the life of the equipment, and reduce the overall operating costs. Due to the wide variety of equipment in use today, an all encompassing maintenance guide applicable to every piece of equipment is not possible. This publication is intended to provide general information on the maintenance of some of the most common equipment found in powerplants. Manufacturer's literature and actual operating experience should be used for setting up a maintenance program.

Probably the best place to start in setting up a maintenance program is the equipment manufacturer. The manufacturer should be the foremost authority on what is required to keep their equipment operating properly. Normally, the manufacturer's operating manual will provide recommendations on lubricants, spare parts, maintenance procedures, and intervals between maintenance.

When preparing a maintenance schedule, keep in mind that the manufacturer's recommendations, as well as the recommendations in this publication, are general and are to be used only as a starting point. A particular piece of equipment may operate under much more severe conditions than the manufacturer expected. Conversely, the equipment may experience very mild service and not require as much attention as anticipated. This is why it is important to utilize personal experience and the equipment's history in preparing a maintenance schedule. An effective maintenance program requires tailoring the schedule to the equipment and the conditions under which it operates. Maintenance performed more frequently than required can cause undue wear and tear to the equipment being serviced as well as being a waste of time, while insufficient maintenance will cause premature equipment failure and a reduced service life. It should be noted that some equipment, most notably cranes and elevators, must be maintained on a regular basis to meet safety regulations.

An equipment maintenance record system is essential in establishing a successful preventive maintenance program. The record system should contain a description of the equipment and its location; manufacturer's data such as size, model, type, and serial number; pertinent electrical and mechanical data; schedule for preventive maintenance and periodic inspections, and data on repairs or maintenance performed including actual work accomplished, material used, number of hours required to accomplish the work, and the cost of labor and materials.

In addition to the records for routine maintenance, a comprehensive report should be written after major overhauls or extraordinary maintenance describing the work done and how it was accomplished. Pertinent photographs should be included in the report. These reports, along with manufacturer's drawings and operation and maintenance manuals, should be kept in a history file where they are readily accessible to maintenance personnel.

Well kept maintenance records are invaluable in any maintenance program. They provide the necessary information for establishing a preventive maintenance and inspection schedule and a spare parts inventory. The records can also provide some consistency in the program even when personnel turnover is high.

1.2 Predictive Maintenance

Predictive maintenance programs are gaining in popularity in many industries including the power industry. Maintenance is scheduled based on the analysis of data collected on the condition of the machine or equipment, not necessarily on any set schedule. To be effective, the machine being monitored has to be instrumented sufficiently to obtain meaningful data. An automated means of collecting, storing, and analyzing the data is helpful as well. The most difficult part of a predictive maintenance program is setting the limits or alarms that indicate when failure is near and maintenance is required. More information and guidelines are becoming available, but there will always be some fine tuning required for each individual application. Not all equipment lends itself to predictive maintenance, i.e., it will be more cost effective to continue with periodic maintenance rather than analyze data to determine the best time for action. A combination of predictive and preventive maintenance would provide the best maintenance program.

1.3 Inspection Checklists

The information contained in the following chapters is intended to provide general maintenance and inspection information for some of the most common equipment found in hydroelectric powerplants. This information, combined with actual operating experience and manufacturer's recommendations, should be used to develop specific inspection schedules and check lists.

The checklist should be concise, but descriptive enough to leave no question to what information is required and how it should be obtained. For example, if a bearing temperature is to be checked, indicate where the thermometer is located and that the reading should be in degrees Fahrenheit or degrees Centigrade. This should infer to the person performing the inspection that a simple check mark indicating the temperature is okay is not acceptable. The checklist should also include the range of acceptable values or conditions for each item on the list. This will allow the person performing the checks to quickly recognize a problem, and notify maintenance personnel.

II. HYDRAULIC TURBINES, LARGE PUMPS, AND AUXILIARY PUMPS

2.1 Pumps

Basically there are two general classifications of pumps: dynamic and positive displacement. These classifications are based on the method the pump uses to impart motion and pressure to the fluid.

Dynamic Pumps. Dynamic pumps continuously accelerate the fluid within the pump to a velocity much higher than the velocity at the discharge. The subsequent decrease of the fluid velocity at the discharge causes a corresponding increase in pressure. The dynamic pump category is made up of centrifugal pumps and special effect pumps such as eductor and hydraulic ram pumps.

Eductors, or jet pumps as they are sometimes called, use a high pressure stream of fluid to pump a larger volume of fluid at a lower pressure. An eductor consists of three basic parts: the nozzle, the suction chamber, and the diffuser. The high pressure fluid is directed through a nozzle to increase its velocity. The high velocity creates a low pressure area that causes the low pressure fluid to be drawn into the suction chamber. The low pressure fluid is then mixed with the high velocity fluid as it flows through the diffuser, and the velocity energy of the mixture is converted into pressure at the discharge. Eductors are commonly used in powerplants and dams to dewater sumps below the inlet of the sump pumps.

By far, the most common type of dynamic pump is the centrifugal pump. The impeller of a centrifugal pump, the rotating component of the pump which imparts the necessary energy to the fluid to provide flow and pressure, is classified according to the direction of flow in reference to the axis of rotation of the impeller. The three major classes of centrifugal impellers are:

1. Axial-flow
2. Radial-flow
3. Mixed-flow

Impellers may be further classified by their construction. The impeller construction may be:

1. Open
2. Semi-open
3. Closed

An open impeller consists of vanes attached to a central hub. A semi-open impeller has a single shroud supporting the vanes, usually on the back of the impeller. The closed impeller incorporates shrouds on both sides of the vanes. The shrouds totally enclose the impeller's waterways and support the impeller vanes.

Centrifugal pumps are also classified by the means in which the velocity energy imparted to the fluid by the impeller is converted to pressure. Volute pumps use a spiral or volute shaped casing to change velocity energy to pressure energy. Pumps which use a set of stationary diffuser vanes to change velocity to pressure are called diffuser pumps. The most common diffuser type pumps are vertical turbine pumps and single stage, low head, propeller pumps. Large volute pumps may also have diffuser vanes, but while these vanes direct the water flow, their main purpose is structural and not energy conversion.

Centrifugal pumps are further classified as either horizontal or vertical, referring to the orientation of the pump shaft (figure 1). In comparison to horizontal pumps, vertical pumps take up less floor space, the pump suction can be more easily positioned below the water surface to eliminate the need for priming, and the pump motor can be located above the water surface to prevent damage in the event of flooding. Vertical pumps can be either dry-pit or wet-pit. Dry-pit pumps are surrounded by air, while wet-pit pumps are either fully or partially submerged. The dry-pit pumps are commonly used in medium to high head, large capacity pumping plants. These large dry-pit pumps are generally volute pumps with closed, radial flow impellers.

There are a variety of wet-pit pump designs for differing applications. One of the most common types is the vertical turbine pump. The vertical turbine pump is a diffuser pump with either closed or semi-open, radial-flow or mixed-flow impellers. Vertical turbine pumps, while most commonly used for deep well

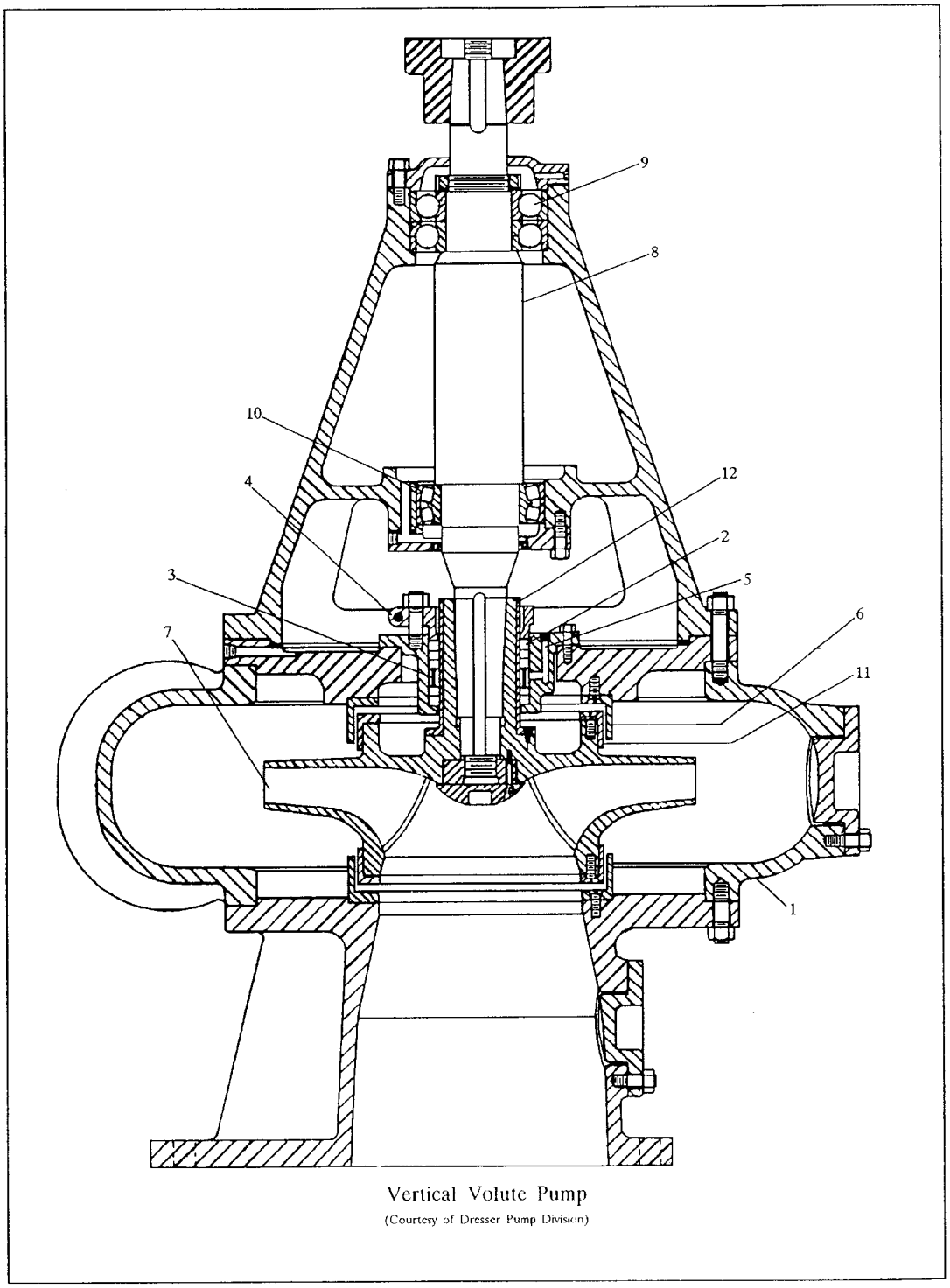

Figure 1.—Vertical volute pump.

applications, have a wide variety of uses, including irrigation pumping plants and sumps in powerplants and dams (figure 2). This type of pump is normally constructed of several stages. A stage consists of an impeller and its casing called a bowl. The main advantage of this type of construction is that system pressure can be varied by simply adding or reducing the number of stages of the pump. The use of vertical propeller pumps is normally limited to low head, high capacity use.

Horizontal pumps are classified according to the location of the suction pipe. The suction can be from the end, side, top, or bottom. Also common in horizontal pumps is the use of double suction impellers. In a double suction impeller pump, water flows symmetrically from both sides into the impeller which helps to reduce the axial thrust load (figure 3). In a hydroelectric plant, horizontal pumps are normally used for fire water and cooling water applications.

Positive Displacement Pumps. Positive displacement pumps enclose the fluid through the use of gears, pistons, or other devices and push or "displace" the fluid out through the discharge line. Displacement pumps are divided into two groups: reciprocating, such as piston and diaphragm pumps and rotary, such as gear, screw, and vane pumps. Since positive displacement pumps do "displace" the fluid being pumped, **relief valves are required in the discharge line ahead of any shutoff valve or any device that could conceivably act as a flow restriction.**

Reciprocating piston or plunger pumps are suitable where a constant capacity is required over a variety of pressures. Piston and plunger pumps are capable of developing very high pressures, although capacities are somewhat limited. These pumps provide a pulsating output which, depending on the application, may be objectionable. The use of reciprocating pumps in hydroelectric powerplants is limited.

Rotary positive displacement pumps are used in a variety of applications, one of the most common being hydraulic systems. Some of the most common rotary pumps used in hydraulic systems are gear, vane, radial piston, and axial piston pumps (figure 4). Screw pumps, with a single helical screw or meshing multiple screws, are most commonly used for fluid transfer although they are sometimes used in hydraulic system applications such as governor oil pumps.

Gear pumps are relatively simple in design relying on the meshing of the mating gears and the fit of the gears in the pump casing to pump the fluid. External gear pumps utilize two meshing gears, usually spur or herringbone types, in a close fitting casing. The fluid is pumped as it is trapped between the rotating gears and the casing and moved from the suction of the pump to the discharge. An internal gear pump utilizes an external gear rotating eccentrically within and driving an internal gear to pump the fluid.

Vane pumps consist of a case and a single eccentric rotor with multiple vanes sliding in slots in the rotor. Centrifugal force keeps the vanes in contact with the interior of the pump casing. As the rotor rotates, the fluid is drawn into the pump by the gradually increasing volume between the vanes and is pushed out through the discharge as the volume gradually decreases.

The radial piston pump is similar in construction to the vane pump in that it has a single rotor, eccentric to the pump housing; but instead of vanes, it has radial pistons. The pistons are held against the pump housing by centrifugal force, and the fluid is pumped by the reciprocating action of the pistons in their bore. The fluid ports are in the center of the rotor.

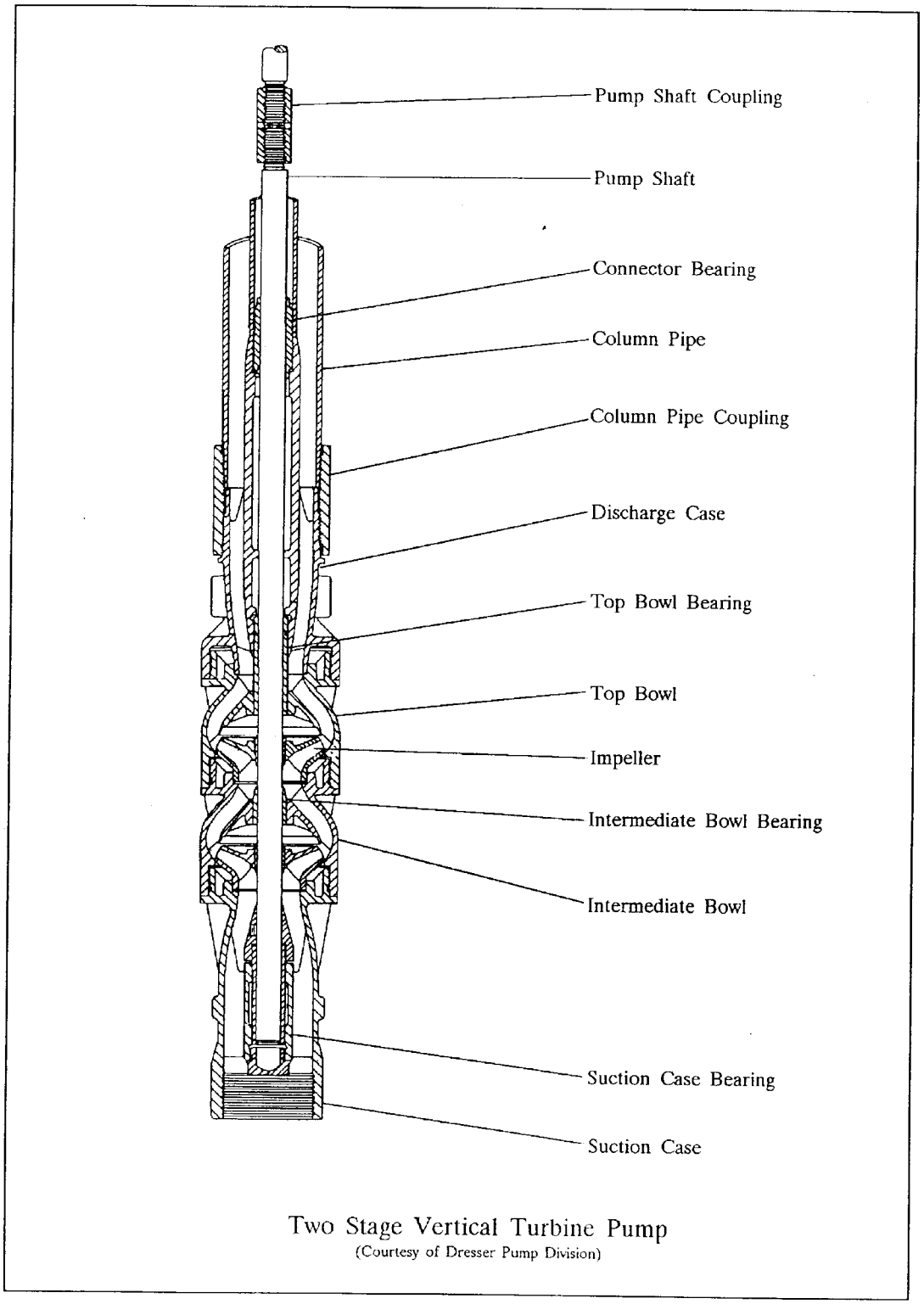

Figure 2.—Two stage vertical turbine pump.

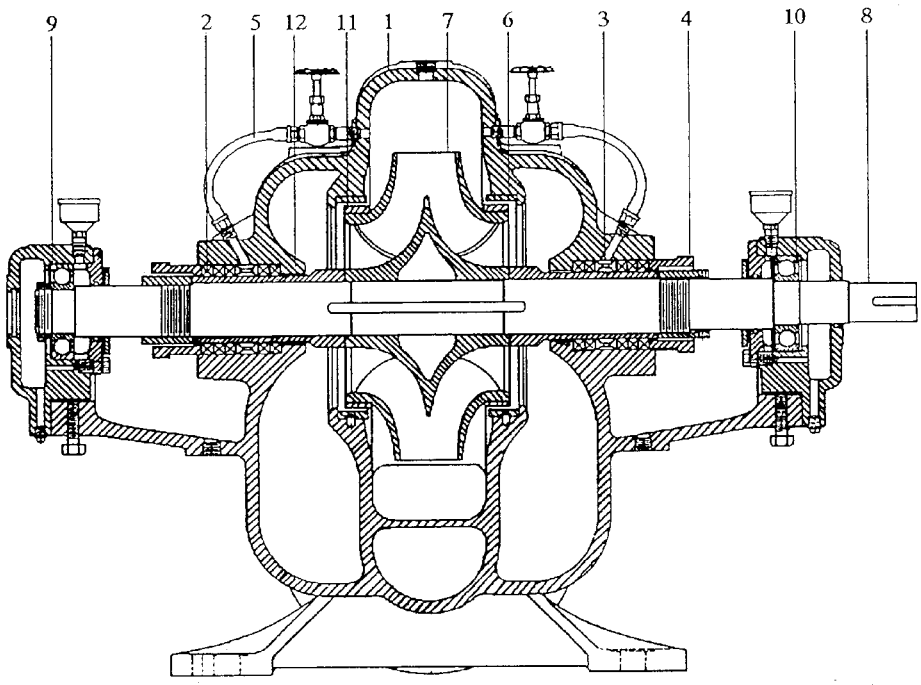

Double Suction Horizontal Volute Pump

PARTS LIST FOR HORIZONTAL AND VERTICAL PUMP DRAWINGS			
STATIONARY PARTS		ROTATING PARTS	
1	Pump Case	7	Impeller
2	Packing	8	Pump Shaft
3	Lantern Ring	9	Thrust Bearing
4	Packing Gland	10	Line Bearing
5	Packing Water Supply	11	Rotating Wear Ring
6	Stationary Wear Ring	12	Shaft Sleeve

(Courtesy of Dresser Pump Division)

Figure 3.—Double suction horizontal volute pump and parts list.

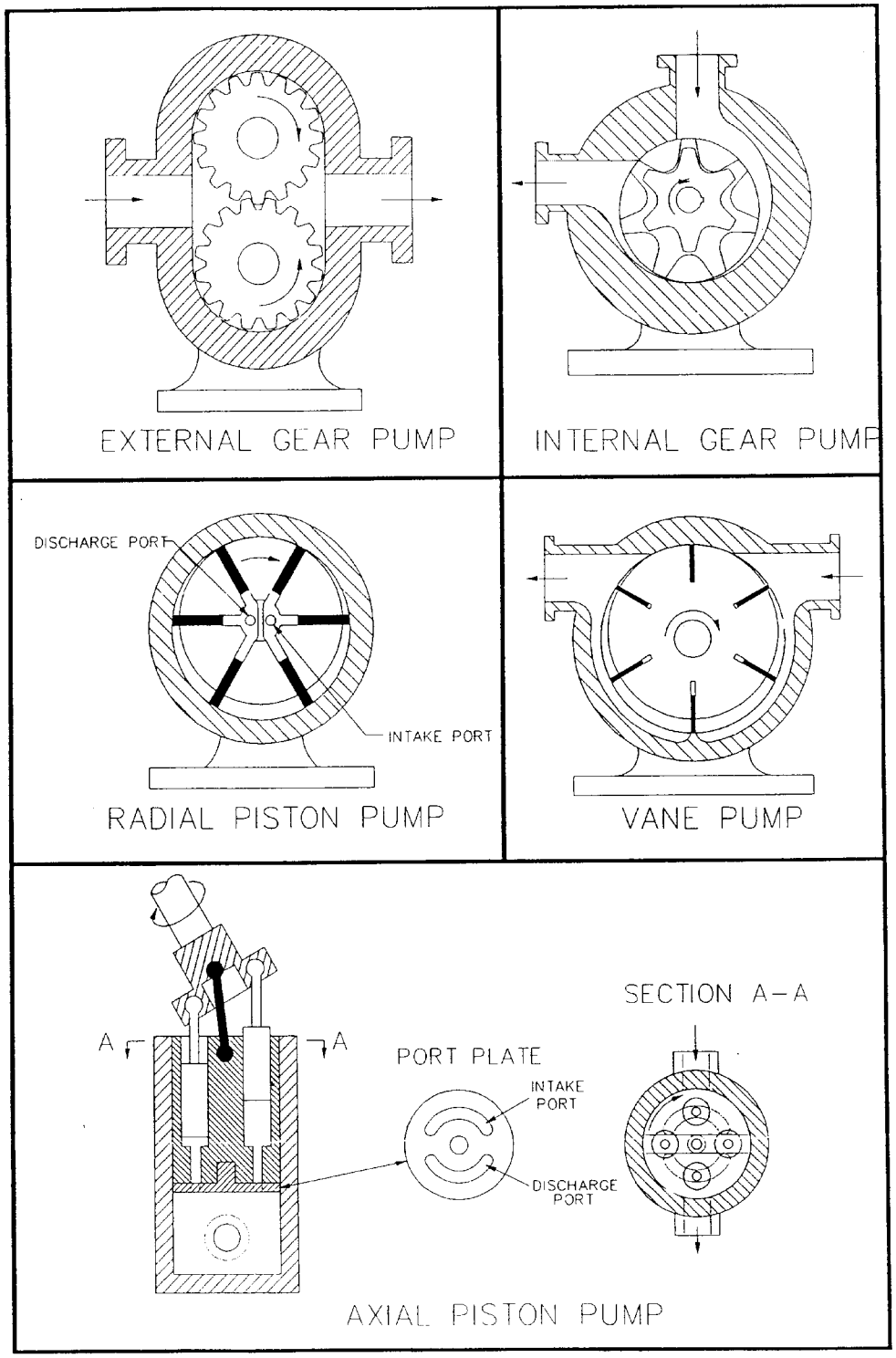

Figure 4.—Positive displacement pumps.

The axial piston pump rotor consists of a round cylinder block with multiple cylinders, parallel to the cylinder block axis. The cylinder block rotates at an angle to the axis of the drive shaft, and the fluid is pumped by reciprocating action of the pistons in the cylinder block.

2.2 Hydraulic Turbines

Hydraulic turbines are classified as either reaction turbines or impulse turbines referring to the hydraulic action by which the pressure or potential energy is converted to rotating or kinetic energy. The reaction turbines include the Francis and the propeller types, while the impulse turbines are represented by the Pelton type turbine.

Impulse turbines convert all available head into kinetic or velocity energy through the use of contracting nozzles. The jets of water from the nozzles act on the runner buckets to exert a force in the direction of flow. This force, or impulse as it is referred to, turns the turbine. Impulse turbines are primarily used for heads of 800 feet or more although they are also used in some low now, low head applications.

Water flow to an impulse turbine is controlled by a needle valve. The position of the needle valve is controlled by a governor to change speed or load. A moveable deflector plate, controlled by the governor, is positioned in front of the nozzle to rapidly deflect some of the water away from the turbine during a load rejection.

The head pressure in a reaction turbine is only partially converted to velocity. While the reaction turbine obtains some power from the impulse force from the velocity of the water, most of its power is a result of difference in pressure between the top and bottom of the runner buckets.

The Francis turbine is very similar in construction to a volute pump with a closed impeller (figure 5). Water entering the spiral or scroll case is directed to the turbine runner by the guide vanes and the wicket gates. The wicket gates, controlled by the governor through hydraulic servomotors, control water flow to the turbine.

A propeller turbine is similar in appearance to a boat propeller. Water is directed and controlled in much the same manner as with the Francis turbine. A variation of the propeller turbine is the Kaplan turbine which features adjustable blades that are pivoted to obtain the highest efficiency possible at any load (figure 6).

2.3 Cavitation Erosion, Abrasive Erosion, and Corrosion

Pump impellers, turbine runners, and their related components may be damaged by a number of different actions, the most common being cavitation erosion, abrasive erosion, and corrosion. The appropriate repair procedure will depend on the cause of the damage.

Cavitation is the formation of vapor bubbles or cavities in a flowing liquid subjected to an absolute pressure equal to, or less than, the vapor pressure of the liquid. These bubbles collapse violently as they move to a region of higher pressure causing shock pressures which can be greater than 100,000 pounds per square inch. When audible, cavitation makes a steady crackling sound similar to rocks passing through the pump or turbine. Cavitation erosion or pitting occurs when the bubbles collapse against the metal surface of the impeller or turbine runner and occurs most frequently on the low pressure side of the impeller inlet

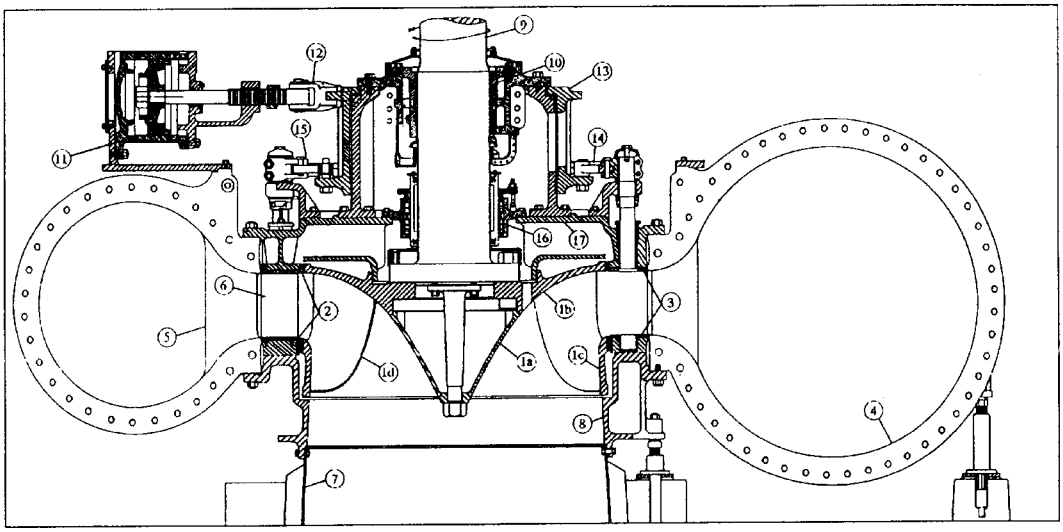

Vertical Francis Turbine

PARTS LIST FOR FRANCIS AND KAPLAN TURBINE DRAWINGS			
1	Turbine Runner	7	Draft Tube
1a	Runner Cone	8	Discharge Ring
1b	Runner Crown (Francis)	9	Turbine Shaft
1c	Runner Band (Francis)	10	Turbine Guide Bearing
1d	Runner Bucket (Francis)	11	Wicket Gate Servomotors
1e	Runner Hub (Kaplan)	12	Servomotor Connecting Rod
1f	Runner Blade (Kaplan)	13	Wicket Gate Operating Ring or Shift Ring
2	Wearing Rings or Seal Rings (Francis)	14	Wicket Gate Link
3	Facing Plates or Curb Plates	15	Wicket Gate Arm
4	Spiral Case or Scroll Case	16	Packing Box or Stuffing Box (Mechanical Seals)
5	Stay Vane	17	Head Cover
6	Wicket Gate	18	Runner Blade Servomotor (Kaplan)

Figure 5.—Vertical Francis turbine and parts list.

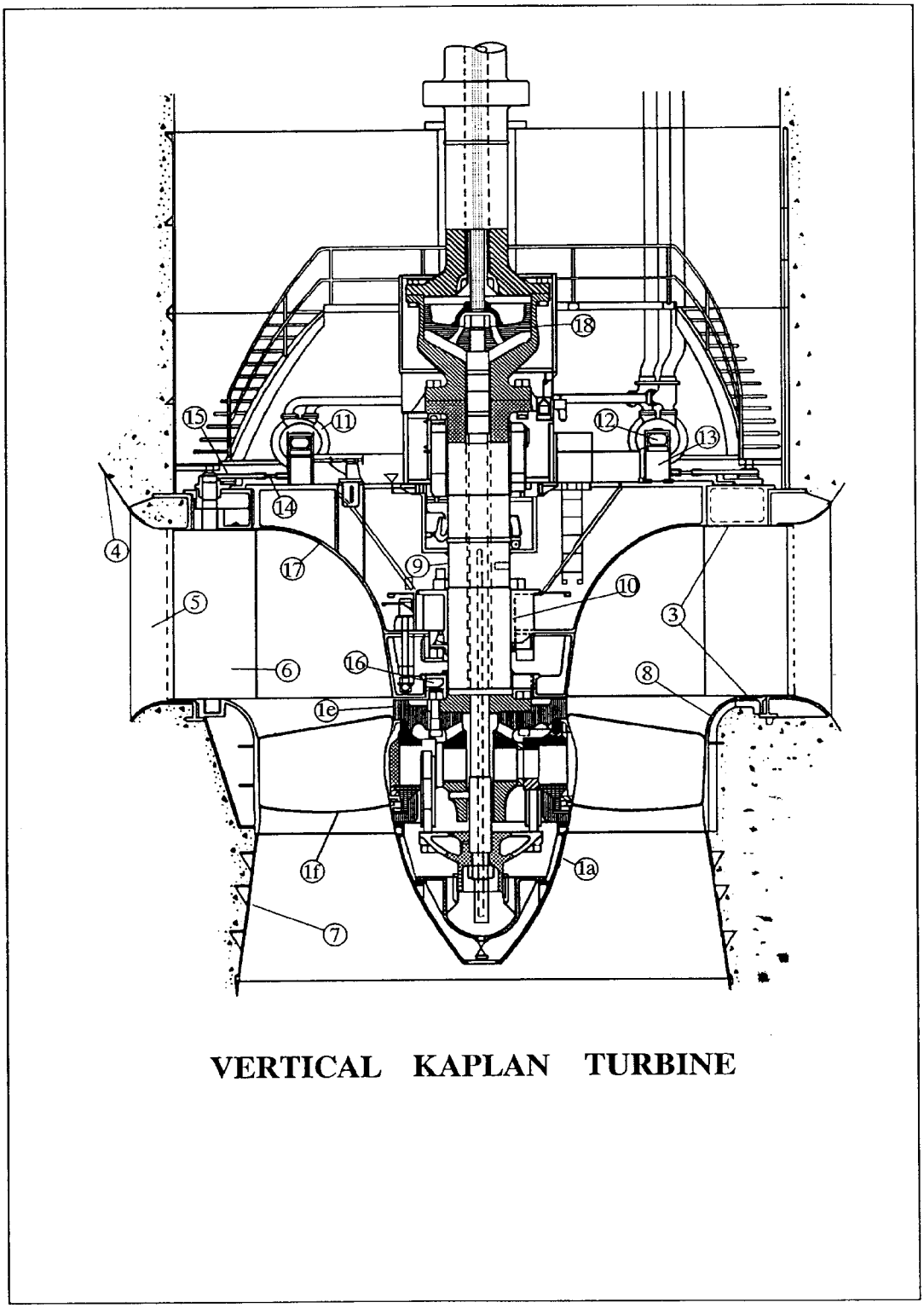

Figure 6.—Vertical Kaplan turbine.

vanes or turbine buckets. Cavitation can not only severely damage the pump or turbine, but it can also substantially reduce the capacity and therefore lessen the efficiency.

Abrasive erosion is the mechanical removal of metal by suspended solids, such as sand, in the liquid flowing through an impeller or turbine. The rate of wear is directly related to the velocity of the liquid, so wear will be more pronounced at the discharge of the nozzle of impulse turbines, near the exit vanes and shrouds of pump impellers, and near the leading edge of reaction turbines buckets where the liquid velocity is highest.

Corrosion damage to submerged or wet metal is the result of an electrochemical reaction. The electrochemical reaction occurs when a galvanic cell is created by immersing two different elements in an electrolyte, causing an electric current to flow between the two elements. The anode, or the positive electrode of the cell, gradually dissolves as a result of the reaction. With the water acting as an electrolyte, irregularities, such as variation in surface finish or imperfections in the metal's composition, create small galvanic cells over the entire surface of the metal. Corrosion damage occurs as the anodes of these cells dissolve. Corrosion, unlike abrasive erosion, is generally independent of the liquid velocity. Pitting caused strictly by corrosion will be uniform over the entire surface.

Diagnosis of the problem can be difficult as the damage may be caused by more than one action. As a metal corrodes, the products of corrosion form a protective film on the metal surface. This film protects the base metal from further corrosive attack. An erosive environment will tend to remove this film leaving the metal susceptible to corrosion damage. Similarly, where cavitation erosion is occurring, the metal will be prone to further damage from corrosion.

Severe erosion or corrosion damage may warrant the replacement of the damaged parts with parts constructed of a material that is more erosion or corrosion resistant. If severe cavitation erosion occurs during normal operation, a new impeller or runner or other design changes may be required. Obviously, replacing an impeller or other major components can be a very expensive endeavor and should only be done after careful economic analysis. Some factors to take into consideration when making an analysis are the cost and effectiveness of past repairs and any gain in efficiency or output that may be obtained by replacement.

Except for severe cases, repair instead of replacement is the most economical solution. The repair procedure will depend on the cause of the damage. Welding is the most successful method of repair for cavitation damage. Repair with non-fusing materials, such as epoxies and ceramics, is generally not successful because the low bond strength of these materials, usually less than 3,000 pounds per square inch, is not capable of withstanding the high shock pressures encountered during cavitation. Prior to any weld repair, a detailed welding procedure should be developed. Welding performed incorrectly can cause more damage by distortion and cracking than the cavitation did originally. Cavitation repair is discussed in more detail in Facilities Instructions, Standards, and Techniques (FIST), Volume 2-5, *Turbine Repair*.

Corrosion or erosion damage, if the pitting is deep enough, can also be repaired by welding. If the pitting is definitely not caused by cavitation, other coatings or fillings may be acceptable. The epoxies and ceramics discussed earlier, if properly applied, can be helpful. in filling pitting damage caused by corrosion or erosion. In a corrosive environment, a coating of paint, after the original contour has been restored, can

offer protection by forming a barrier between the metal and the electrolyte and preventing the electrochemical reaction.

Erosion resistant coatings, in order to be effective, must be able to withstand the cutting action of the suspended abrasive. A coating of neoprene has been proven successful for sand erosion protection. There are other coatings available that have also been proven to be resistant to erosion, but many of these coatings can be difficult to apply and maintain and may, because of coating thickness, restrict water passages somewhat. Erosion resistant coatings should be chosen based on the design of the turbine or pump and the severity of erosion.

2.4 Wearing Rings

The purpose of wearing rings, or seal rings as they are also called, is to provide a renewable seal or leakage joint between a pump impeller or a turbine runner and its casing. As the name implies, these rings can wear over time; and as the clearance increases, efficiency can decrease. As a general rule, when the wearing ring clearance exceeds 200 percent of the design clearance, the wearing rings should be replaced or renewed. If a design does not include replaceable wearing rings, it may be necessary to build up the wearing ring area by welding or another acceptable process and machining back to the original clearances; remachine the wear ring area and impeller or runner to accept replaceable wearing rings or, on small pumps, replace the impeller and casing.

The location of the wearing rings varies depending on the design of the pump or turbine. Francis turbines and most closed impeller pumps have two wearing rings, although some pump impellers may only have suction side wearing rings. Propeller turbines, open impeller, and many semi-open impeller pumps do not have wearing rings, relying instead on a close fit between the runner or impeller vanes and the casing to control leakage.

2.5 Packing/Mechanical Seals

Packing. The most common method of controlling leakage past a pump, turbine, or wicket gate shaft is by the use of compression packing. The standard packing or stuffing box will contain several rings of packing with a packing gland to hold the packing in place and maintain the desired compression. Some leakage past the packing is necessary to cool and lubricate the packing and shaft. If additional lubrication or cooling is required, a lantern ring may be also be installed along with an external packing water source.

Over time, the packing gland will have to be tightened to control leakage. To prevent burning the packing or scoring the shaft when these adjustments are made, most compression packings contain a lubricant. As the packing is tightened, the lubricant is released to lubricate the shaft until leakage past the packing is reestablished. Eventually, the packing will be compressed to a point where no lubricant remains, and replacement is required. Continued operation with packing in this condition can severely damage the shaft.

When packing replacement is necessary, remove all of the old packing. If the packing box is equipped with a lantern ring, this also must be removed along with all of the packing below it. With the packing removed, special attention should be given to the cleaning and inspection of the packing box bore and the shaft or shaft sleeve. To provide an adequate sealing surface for the new packing, a severely worn shaft or shaft sleeve should be repaired or replaced. Likewise, severe pitting in the packing box bore should be repaired.

In order for the packing to seal against a rough packing box bore requires excessive compression of the packing. This over compression of the packing will lead to premature wear of the shaft or shaft sleeve.

On small pumps, the shaft runout at the packing box should be checked by manually rotating the shaft and measuring the runout with a dial indicator. In most cases, total indicated runout should not exceed 0.003 inch. If the runout is excessive, the cause should be found and corrected. Bent shafts should be replaced and misalignment corrected.

There are a number of different types of packing available, so when choosing new packing, care should be taken to ensure that it is the correct size and type for the intended application. All of the relevant conditions the packing will operate under, such as shaft size and rotational speed, must be considered. Installing the wrong packing can result in excessive leakage, reduced service life, and damage to the shaft or sleeve.

The new packing should be installed with the joints staggered 90 degrees apart. It is sometimes helpful to lubricate the packing prior to installation. The packing manufacturer should be consulted for recommendations for a lubricant and for any special instructions that may be required for the type of packing being used. With all of the packing and the lantern ring in place, the packing gland should be installed finger tight.

There should be generous leakage upon the initial startup after the installation of new packing. The packing gland should be tightened evenly and in small steps until the leakage is reduced sufficiently. The gland should be tightened at 15- to 30-minute intervals to allow the packing time to break-in. The temperature of the water leaking from the packing should be cool or lukewarm, never hot. If the water is hot, back off the packing gland.

Mechanical Seals. Mechanical seals are used in both pump and turbine applications. Mechanical seals allow very little leakage and can be designed to operate at high pressures. Properly installed mechanical seals will have a long service life and require little maintenance.

Basically, a mechanical seal on a small pump consists of a stationary and a rotating member with sealing surfaces perpendicular to the shaft. The highly polished sealing surfaces are held together by a combination of spring and fluid pressure and are lubricated by maintaining a thin film of the fluid sealed between the surfaces.

There is a wide variety of mechanical seals available for small pump applications, each having its own distinct installation procedure; therefore, it is important to follow the seal manufacturer's installation instructions as closely as possible. The manufacturer should also provide information of the allowable shaft runout and endplay for their particular seal.

Mechanical seals used in hydraulic turbines and large pumps consist of sealing segments, usually made of carbon, held against the shaft by spring tension and lubricated by a thin film of water. These seals usually require grease lubrication prior to start up if the unit is shut down for extended periods.

Since mechanical seals are precisely made and rely on very tight tolerances in order to operate successfully, a great deal of care must be taken during the installation. Just a small amount of dirt or other contaminants on the polished sealing surfaces can allow leakage past the seal and reduce the seal's life.

Seal water is provided on most larger seals to help cool and keep the seals clean. The seal water must be clear clean water. Some type of filtration should be installed if there is any silt or sand in the seal water supply as any contaminants can quickly damage the seals.

2.6 Bearings

The purpose of the bearings is to locate and support the shafts of a pump or turbine. The bearings can provide radial support (line or guide bearings), axial support (thrust bearings), or both. The most common types of bearings are fluid film and antifriction bearings.

Fluid Film Bearings. Fluid film bearings derive their load carrying capacity through the formation of an "oil wedge" as the shaft or thrust runner rotates. The formation of this "oil wedge" is similar to the fluid wedge that forms under a speeding boat, raising its bow out of the water. The force of the wedge in a bearing must be sufficient to balance the load to the bearing surfaces.

Fluid film, or plain bearings, are normally used on turbines and large pumps and can be in the form of sleeve bearings, either solid or split, tilting pads, or pivoted thrust shoes. These bearings usually consist of a cast iron or steel bearing shell with a tin or lead based babbitt lining. Bronze bushings are used for line shaft bearings in vertical wet-pit pumps and on some horizontal pumps.

The thrust and upper guide bearings of large vertical generators are insulated from the frame to prevent circulating current from passing through the bearing. The bearing can be quickly damaged or destroyed if not adequately insulated. Test terminals are usually provided to check the insulation. Refer to FIST, Volume 3-11, *Miscellaneous Power O&M Instructions* for more information on bearing insulation testing.

Antifriction Bearings. The antifriction bearing, through the use of rolling elements, utilizes the low coefficient of rolling friction as opposed to that of sliding friction of the fluid film bearing in supporting a load. The most common type of antifriction bearings are "ball" and "roller" bearings, referring to the shape of the bearing's rolling elements. These bearings are also classified as "radial," "radial-thrust," or "thrust" bearings according to the type of load they are meant to support.

An antifriction bearing is a delicate, precision-made piece of equipment, and a great deal of care should be taken during installation. The bearing manufacturer will usually provide instructions and precautions for the installation of a particular bearing, and these instructions should be followed closely. Cleanliness is probably the most important thing to take into consideration in handling antifriction bearings. Any dust or dirt can act as an abrasive and quickly wear the bearing's rolling elements; therefore, it is important to work with clean tools and clean hands and to clean the bearing housings, covers, and shaft prior to installation. The new bearing should not be cleaned or wiped prior to installation unless it is recommended by the manufacturer. Bearings should be pressed onto shafts using adapters that apply even pressure to the inner race only. Never hammer a bearing onto a shaft.

2.7 Shaft Couplings

Couplings are used to connect the shaft of a driver, such as a turbine or a motor, to the shaft of a driven machine, such as a pump or generator. There are basically two types of couplings: rigid and flexible.

Rigid couplings require precise alignment and are most commonly used in vertical units where the entire weight is supported by thrust bearings in the motor or generator. Flanged and threaded couplings are the most widely used rigid couplings. Flanged couplings are used on large vertical units and consist of precisely machined flanges on each shaft, connected by a series of coupling bolts around the perimeter of the flanges. Threaded couplings, used to connect the line shafts of vertical turbine pumps, are cylindrically shaped with internal threads matching the external threads on the line shafts. The shafts to be coupled are simply screwed tightly into either end of the coupling.

Flexible couplings are designed to accommodate slight misalignment between shafts and to some extent, dampen vibration. The amount of misalignment allowable is completely dependent of the design of the particular coupling. Since there are a number of flexible coupling designs, tolerances for misalignment should be obtained from the coupling manufacturer. The flexibility of the couplings can be provided through clearances between mating parts, as in gear and chain couplings, or through the use of a flexible material in the coupling, as in flexible disk and compression couplings. Horizontal pumps usually employ some sort of flexible coupling to connect the pump to its driver.

If properly aligned, most couplings should require very little maintenance outside of periodic inspection, and in some cases, lubrication. Over time, the alignment between the pump and its driver can deteriorate, increasing stress on the coupling which can lead to a shorter life.

2.8 Shaft Alignment

Misalignment is a common and sometimes serious problem. Poor alignment can cause premature wear or failure of bearings, overheating of shaft couplings, and in extreme cases, cracked or broken shafts. The procedure for alignment depends on the type of equipment and its design.

Large vertical units, suspended from a thrust bearing in the motor or generator, require making the shaft plumb and the guide bearings concentric. The procedure for aligning these units is discussed in detail in FIST, Volume 2-1, *Alignment of Vertical Shaft Hydro Units*.

The lineshafts of vertical turbine pumps are held in alignment by lineshaft bearings in the pipe column. The proper alignment of the lineshaft depends on the proper assembly of the pipe column and the bearing retainers. Depending on the design, the pump motor to lineshaft coupling may be aligned by the face and rim method or the reverse indicator method described below. Refer to the pump manufacturer's instructions for specific directions for assembly and alignment.

Horizontal Pump Alignment. Horizontal pumps are usually coupled to the pump driver with a flexible coupling. The amount of misalignment a flexible coupling can tolerate is dependent on the coupling's design and characteristics, such as speed and torque, of the machines being coupled. The coupling's manufacturer should provide installation instructions indicating the allowable tolerances for a particular design. A horizontal pump can usually be aligned acceptably by either the face and rim method or reverse indicator method. In most cases, the pump driver is aligned to the pump, as the pump is usually connected to rigid piping and is more difficult of move.

Preliminary Checks for Alignment of Horizontal Pumps

1. At least 0.125 inch of nonrusting shims should be installed under each leg of the motor to allow for adjustments that may be required during the alignment procedure.

2. Compensation should be made for any "soft" or "dead" foot condition. A "soft foot" condition is comparable to a short leg on a four legged table. To check for a "soft foot," make sure all four feet are securely bolted to the baseplate. With a dial indicator, check the rise of each foot as its hold-down bolt is loosened. Retighten the hold-down bolt after the rise is recorded, so that only one bolt is loose at a time. If one foot rises more than the other three, that foot is the "soft foot." For example, if one foot rises 0.005 inch while the other three rise only 0.002 inch, a 0.003-inch shim should be added to the “soft foot.”

3. The hold-down bolt holes should be checked for sufficient clearance to allow for movement during the alignment procedure.

4. Jacking bolts or other fixtures for moving the motor should be fabricated or procured.

5. The mounting brackets and extension bars used for the indicators should be constructed to minimize sag. Sag is the effect of gravity on the indicator extension bar and can greatly affect the accuracy of the readings when using the Reverse Indicator Method or rim readings of the Face and Rim Method. The sag of an indicator bar can be determined by securely attaching the bar to a section of rigid bar stock or a shaft mandrel. The bar stock or mandrel can be supported and rotated by hand or between centers on a lathe. With the indicator bar positioned on top, zero the indicator and rotate the bar stock 180 degrees. The indicator reading will be twice the actual amount of bar sag (figure 7). To correct alignment readings for sag, add twice the amount of bar sag to the bottom indicator reading. The bar sag is always expressed as a positive number regardless of indicator convention.

Important: The procedures described below for the Face and Rim and the Reverse Indicator Alignment Methods assume that movement towards the indicator moves the indicator needle in the positive direction, while movement away from the indicator moves the needle in the negative direction.

If the indicator used has the opposite sign convention, that is, movement towards the indicator moves the needle in the negative direction, enter the opposite sign than what is read onto the worksheet.

Face and Rim Alignment Method. The face and rim method of alignment utilizes a dial indicator attached to one of the coupling flanges to check for angular (dogleg) and parallel (offset) misalignment (figure 8). Indicator readings can be taken by rotating just one shaft; but in order to compensate for an untrue surface on the face or rim of the coupling flange, both shafts should be rotated together in the direction of normal rotation. If it is not possible to rotate both shafts, the indicator base should be attached to the shaft that is rotated. The procedure is the same whether one or both shafts are rotated. From the dial indicator readings and the dimensions of the motor, the amount each leg should moved can be determined analytically. The Face and Rim Worksheet simplifies the required calculations. The following procedure uses the Face and Rim Worksheet (figures 9 and 10).

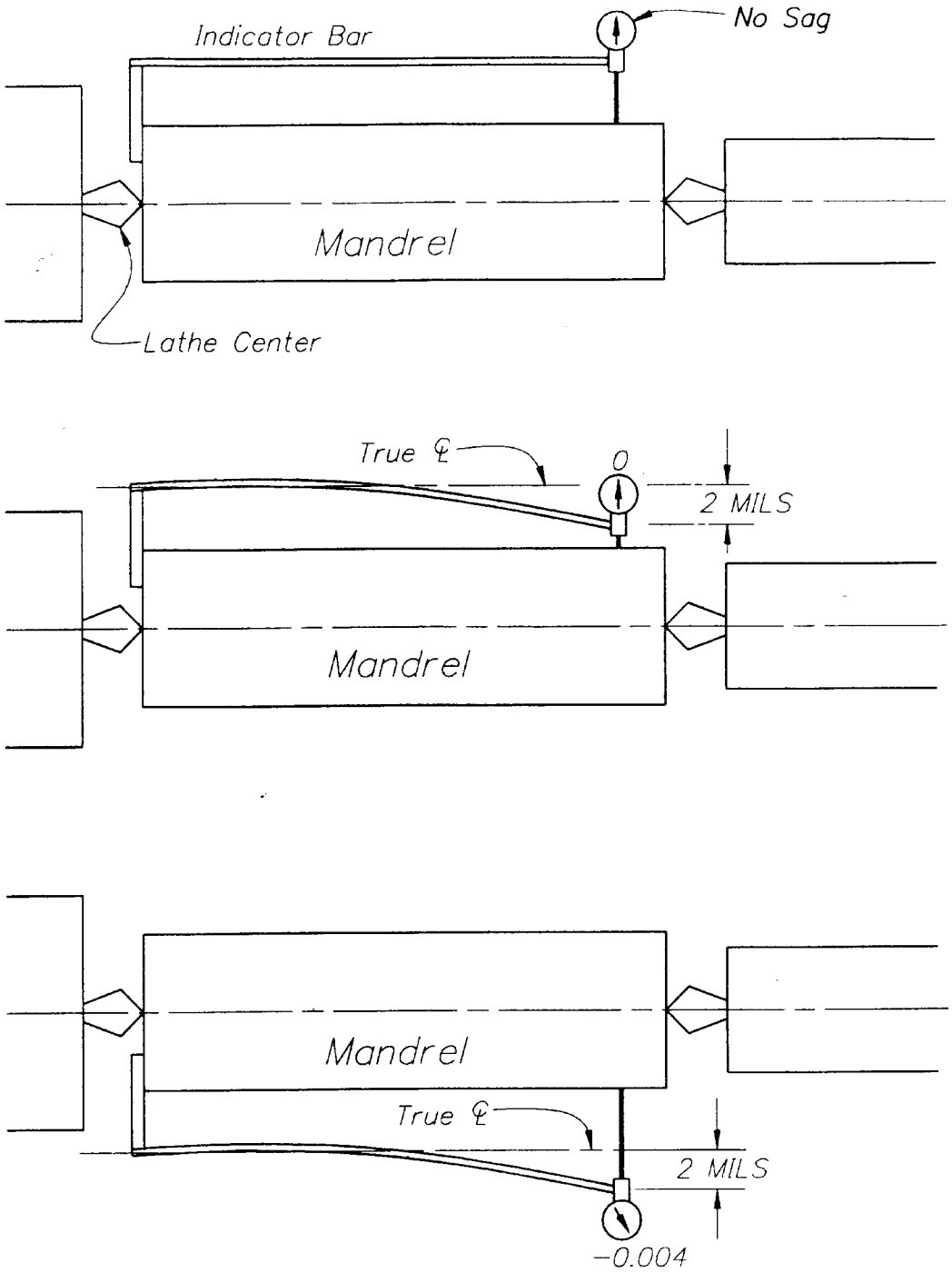

Figure 7.—Checking indicator bar for sag.

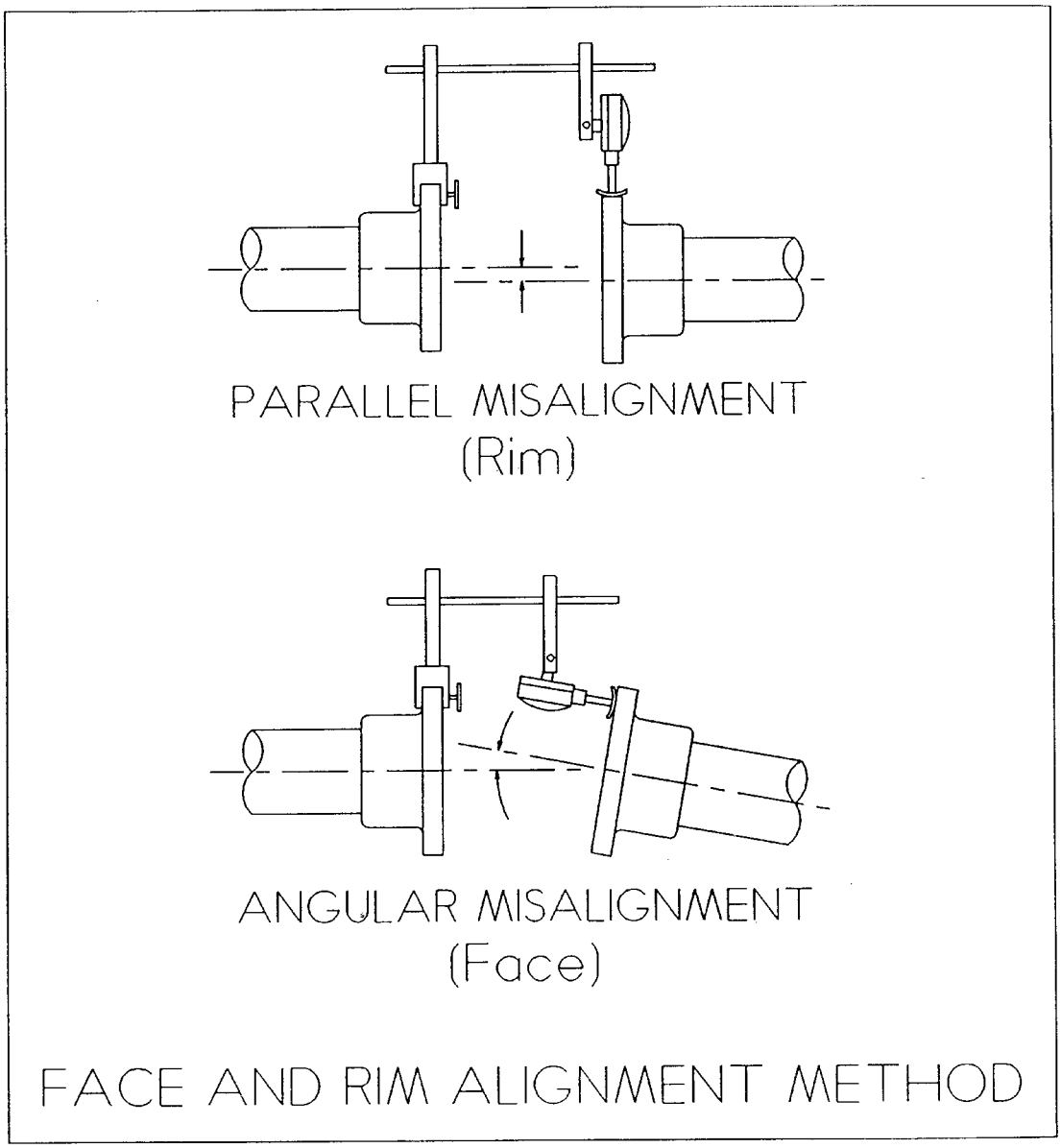

Figure 8.—Face and rim alignment method.

FACE AND RIM ALIGNMENT WORKSHEET

FACE READINGS

	Column 1 Reading	Column 2 Twice Bar Sag	Column 3 Readings Corrected for Bar Sag Column 1 + Column 2	Column 4 Bottom - Top Left - Right	Column 5 Outboard Leg Move Column 4 * B/2R	Column 6 Inboard Leg Move Column 4 * A/2R
Top		0				
Bottom		0				
Right		0				
Left		0				
Top						

RIM READINGS

	Column 1 Reading	Column 2 Twice Bar Sag	Column 3 Readings Corrected for Bar Sag Column 1 + Column 2	Column 4 Top - Bottom Right - Left	Column 5 Outboard Leg Move 1/2 Column 4	Column 6 Inboard Leg Move 1/2 Column 4
Top		0				
Bottom						
Right		0				
Left		0				
Top						

TOTAL MOVEMENT FOR MOTOR LEGS

	Column 1 Total Move for Outboard Legs FACE Col. 5 + RIM Col. 5	Column 2 Direction of Move for Outboard Legs (Sign of Col. 1) + Up Right - Down Left	Column 3 Total Move for Inboard Legs FACE Col. 6 + RIM Col. 6	Column 4 Direction of Move for Inboard Legs (Sign of Col. 3) + Up Right - Down Left
Top/Bottom				
Right/Left				

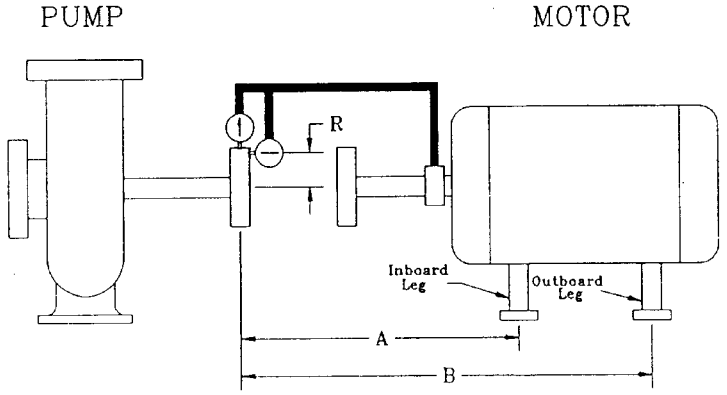

A = _____ B = _____ R = _____

Bar Sag = _____

Figure 9.—Face and rim alignment worksheet.

FACE AND RIM ALIGNMENT WORKSHEET

FACE READINGS

	Column 1 Reading	Column 2 Twice Bar Sag	Column 3 Readings Corrected for Bar Sag Column 1 + Column 2	Column 4 Bottom - Top Left - Right	Column 5 Outboard Leg Move Column 4 * B/2R	Column 6 Inboard Leg Move Column 4 * A/2R
Top	0	0	0	+1	+4	+1
Bottom	+1	0	+1			
Right	+3.5	0	+3.5	-2.5	-10	-2.5
Left	+1	0	+1			
Top	0					

RIM READINGS

	Column 1 Reading	Column 2 Twice Bar Sag	Column 3 Readings Corrected for Bar Sag Column 1 + Column 2	Column 4 Top - Bottom Right - Left	Column 5 Outboard Leg Move 1/2 Column 4	Column 6 Inboard Leg Move 1/2 Column 4
Top	0	0	0	+10	+5	+5
Bottom	-12	+2	-10			
Right	-5	0	-5	+2	+1	+1
Left	-7	0	-7			
Top	0					

TOTAL MOVEMENT FOR MOTOR LEGS

	Column 1 Total Move for Outboard Legs FACE Col. 5 + RIM Col. 5	Column 2 Direction of Move for Outboard Legs (Sign of Col. 1) + Up Right - Down Left	Column 3 Total Move for Inboard Legs FACE Col. 6 + RIM Col. 6	Column 4 Direction of Move for Inboard Legs (Sign of Col. 3) + Up Right - Down Left
Top/Bottom	+9	Up	+6	Up
Right/Left	-9	Left	-1.5	Left

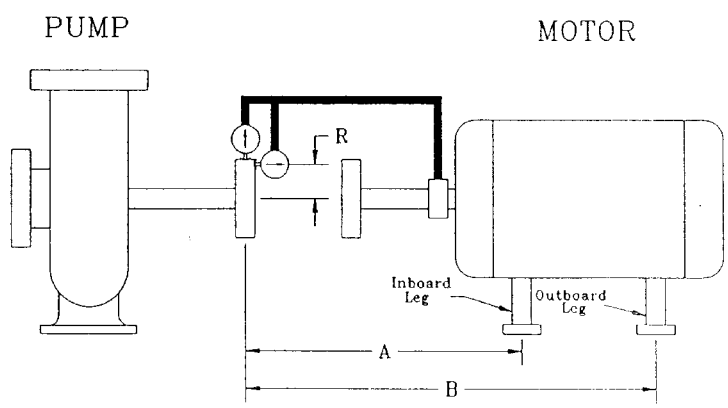

A = 10" B = 40" R = 5"

Bar Sag = 0.001"

Figure 10.—Face and rim alignment worksheet—example.

Face Reading

1**.** Attach the indicator base to the motor coupling and adjust the indicator so that the button is resting near the outer edge of the pump coupling flange face. Measure the distance from the centerline of the indicator button to the shaft centerline and enter this value on the worksheet as dimension R. Measure the horizontal distance from the face of the pump coupling flange to the center of the inboard leg and enter this value on the worksheet as the dimension A. Measure the horizontal distance from the face of the pump coupling flange to the center of the outboard leg and enter this value on the worksheet as the dimension B.

2. Rotate the shaft with the indicator so that the indicator is at the top or 12 o'clock position and zero the indicator.

3. Rotate both shafts, preferably in the direction of normal rotation, and record the indicator readings at 90-degree intervals. For consistency, right and left readings should be designated for both shafts looking from the pump end towards the motor end. The indicator should read zero at 360 degrees. If it doesn't, zero the indicator and retake the readings.

Rim Reading

1. Enter twice the actual amount of bar sag in column 2, bottom reading. Attach the indicator base to the motor coupling flange and adjust the indicator so that the button is resting on the rim of the pump coupling flange.

2. Rotate the shaft with the indicator so that the indicator is at the top or 12 o'clock position and zero the indicator.

3. Rotate both shafts, preferably in the direction of normal rotation, and record the indicator readings at 90-degree intervals. For consistency, right and left readings should be designated for both shafts looking from the pump end towards the motor end. The indicator should read zero at 360 degrees. If it doesn't, zero the indicator and retake the readings.

Calculations. With all the readings entered in column 1 for both the Face and Rim Readings, follow the directions in each column.

Face and Rim Readings

Column 1
These are the actual readings obtained from the dial indicator.

Column 2
Enter twice the actual amount of bar sag for the fixture being used.

Column 3
Add columns 1 and 2. Column 2 is the effect of bar sag and is only added to the bottom reading of the Rim Readings.

Column 4

Face - Subtract the top from the bottom and the right from the left from the corrected readings in column 3.

Rim - Subtract the bottom from the top and the left from the light from the corrected readings in column 3.

Column 5

Face - This is the amount of movement required at the outboard legs to correct the angular misalignment. Multiply the value in column 4 by the dimension B, divided by 2 times the dimension R.

Rim - This is the amount of movement required at the outboard legs to correct the parallel misalignment. Multiply the value in column 4 by 1/2.

Column 6

Face - This is the amount of movement required at the inboard leg to correct the angular misalignment. Multiply the value in column 4 times the dimension B, divided by 2 times the dimension R.

Rim - This is the amount of movement required at the inboard leg to correct the parallel misalignment. Multiply the value in column 4 by 1/2.

Total Movement for Motor Legs. This part of the table sums the required movement at each leg for parallel and angular misalignment to determine total required movement.

Column 1 ,

Add the value in Face, column 5 to the value in Rim, column 5 to determine total movement required for outboard legs.

Column 2

Determine the direction of the required movement by the sign of the value in column 1. A positive value means the motor should be moved up or right. A negative value means the motor should be moved down or left.

Column 3

Add the value in Face, column 6 to the value in Rim, column 6 to determine total movement required for inboard legs.

Column 4

Determine the direction of the required movement by the sign of the value in column 1., Positive values mean the motor should be moved up or right. Negative values mean the motor should be moved down or left.

Reverse Indicator Method. The reverse indicator method of alignment can be used when it is possible to rotate both shafts. This method utilizes two dial indicators, one attached to each shaft,

taking a reading on the opposite shaft. Indicator brackets are available that allow the indicator to be attached directly to the shaft, indicating off the indicator bar. This arrangement reduces bar sag and eliminates inaccuracies caused by poor surface condition of the shaft. From the data obtained by the reverse indicator method, it is possible to determine, either analytically or graphically, the movement or shims necessary to align the shafts. A graphical method is presented below using the Reverse Indicator Alignment Worksheet (figures 11 through 13).

Record Indicator Readings

1. Attach indicator bars and indicators to shafts and position shafts so that the pump indicator, that is the indicator nearest the pump, is on top and the motor indicator is on the bottom. By increasing the span between the indicators, the accuracy of the readings can usually be increased, although bar sag may also increase. Zero both indicators at this position.

2.Rotate both shafts, preferably in the direction of normal rotation, and record the indicator readings at 90-degree intervals. For consistency, right and left readings should be designated for both shafts looking from the pump end towards the motor end. Both indicators should read zero at 360 degrees. If not, zero indicators and retake readings. **It is very important to record whether a reading is positive or negative and to keep track of each value's sign while performing the addition and subtraction in the following steps.**

3. To correct for bar sag, add twice the actual amount of sag to the bottom readings.

4. Subtract the top reading from the corrected bottom reading and the left reading from the right reading and divide the differences by two. These values will be used for plotting the position of the shafts.

Plot Data

1. Two graphs will be needed: one for the horizontal plane (top view) and one for the vertical plane (side view). The horizontal scale of both graphs will represent the horizontal distance from the plane of the pump indicator to the plane of the rear motor feet. Since the pump shaft will not be moved, it will be used as the horizontal reference in determining the position of the motor shaft. The vertical scale will represent the misalignment of the motor shaft.

2. Establish the horizontal scale, marking with vertical lines the relative position of both indicators and the front and rear motor feet. Draw two horizontal lines representing the pump shaft reference line for the horizontal and vertical planes. A vertical scale of 0.001 inch per division is usually satisfactory.

3. Plot the values from step 4 above. These values represent the vertical distance from the pump shaft line to the motor shaft line at each of the indicator locations. The top-bottom readings are used in the vertical plane plot, and the left-right readings are used in the horizontal plane plot.

REVERSE INDICATOR ALIGNMENT WORKSHEET

		Column 1 Actual Reading	Column 2 Correction to bottom reading for Bar Sag (Twice Actual Amount)	Column 3 Column 1 - Column 2	Column 4 Bottom-Top Right-Left	Column 5 1/2 Column 4 Distance of Motor Shaft Line from Pump Shaft Line	Column 6 Direction of Motor Shaft Line from Pump Shaft Line Circle Direction Corresponding to Sign of Value in Column 5
Pump Indicator	Bottom						+ Above - Below
	Top		0				
	Right		0				+ Left - Right
	Left		0				
	Top						
Motor Indicator	Bottom						+ Below - Above
	Top		0				
	Right		0				+ Right - Left
	Left		0				
	Bottom						

1. Zero indicators with pump indicator at top position and motor indicator at the bottom. (Pump indicator is indicator nearest pump.)

2. Left and right for both indicators is determined by looking from the pump end towards the motor end.

3. The second top reading for the pump indicator and second bottom reading for the motor indicator should be zero. If not, rezero the indicators and repeat all readings.

Indicator Bar Sag = _____ A = _____ B = _____ C = _____

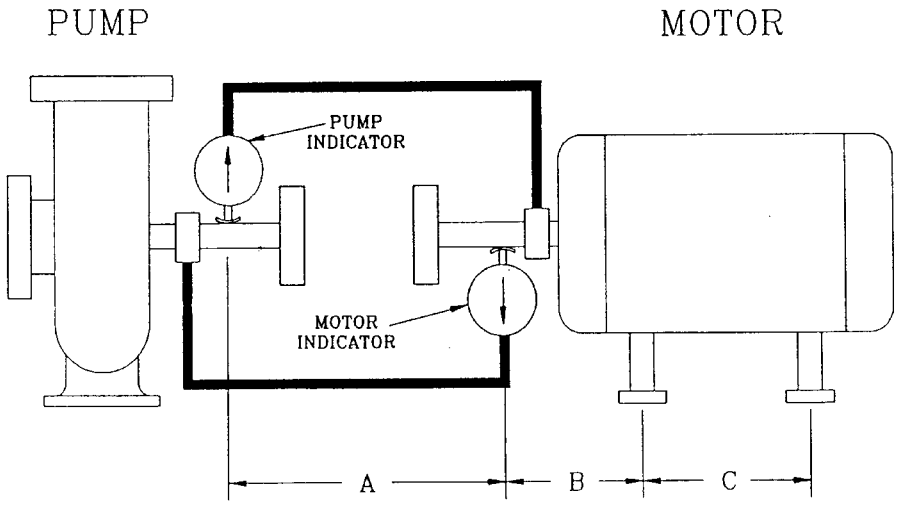

Figure 11.—Reverse indicator alignment worksheet.

REVERSE INDICATOR ALIGNMENT WORKSHEET

		Column 1 Actual Reading	Column 2 Correction to bottom reading for Bar Sag (Twice Actual Amount)	Column 3 Column 1 - Column 2	Column 4 Bottom-Top Right-Left	Column 5 1/2 Column 4 Distance of Motor Shaft Line from Pump Shaft Line	Column 6 Direction of Motor Shaft Line from Pump Shaft Line Circle Direction Corresponding to Sign of Value in Column 5
Pump Indicator	Bottom	-12	+2	-10	-10	-5	+ Above - Below
	Top	0	0	0			
	Right	-5	0	-5	+2	+1	+ Left - Right
	Left	-7	0	-7			
	Top	0					
Motor Indicator	Bottom	0	+2	+2	+12	+6	+ Below - Above
	Top	-10	0	-10			
	Right	-4	0	-4	+2	+1	+ Right - Left
	Left	-6	0	-6			
	Bottom	0					

1. Zero indicators with pump indicator at top position and motor indicator at the bottom. (Pump indicator is indicator nearest pump.)

2. Left and right for both indicators is determined by looking from the pump end towards the motor end.

3. The second top reading for the pump indicator and second bottom reading for the motor indicator should be zero. If not, rezero the indicators and repeat all readings.

Indicator Bar Sag = 0.001" A = 16" B = 4" C = 40"

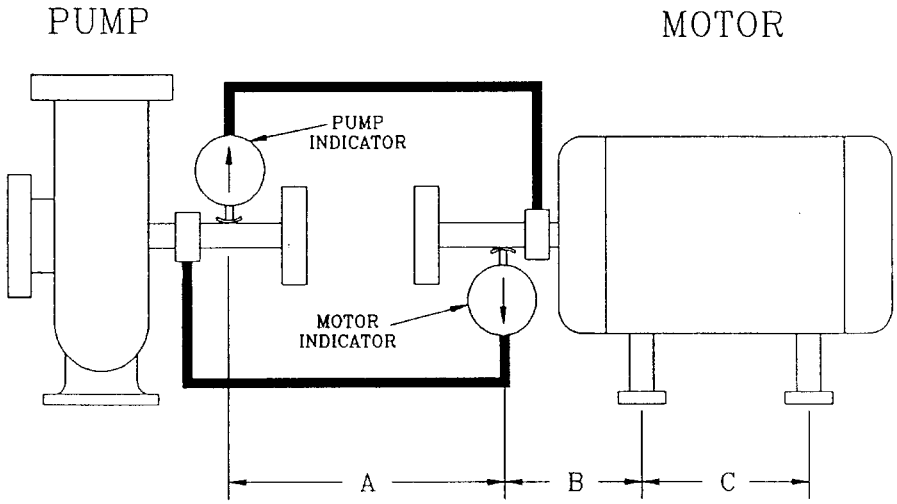

Figure 12.—Reverse indicator alignment worksheet—example.

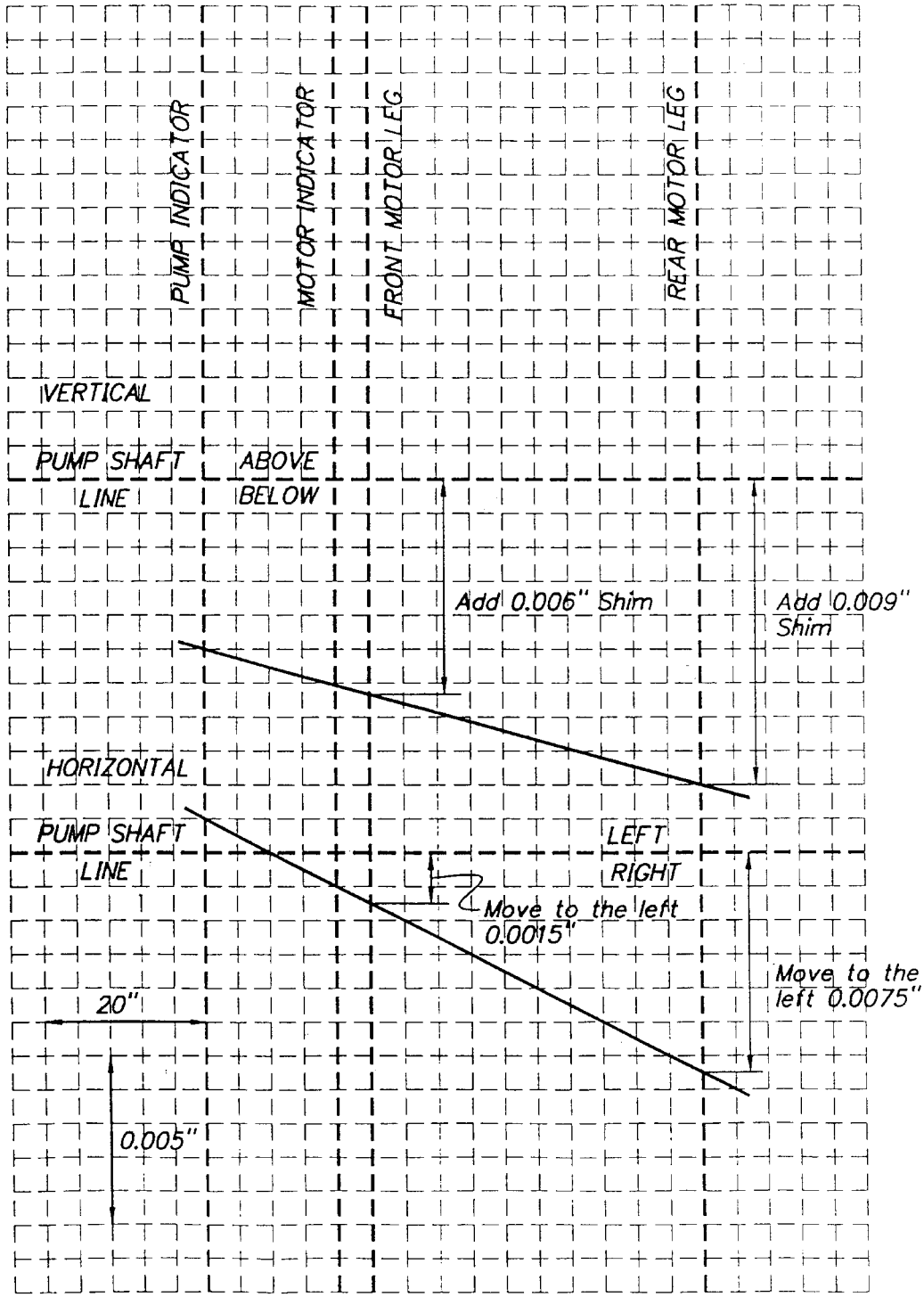

Reverse Indicator Alignment Graph

Figure 13.—Reverse indicator alignment graph.

The sign convention is different for the two indicators. If the values for the pump indicator are positive, the plot will be above and left of the pump shaft reference line. The plot will be below and right of the pump shaft reference line for positive motor indicator readings.

4. Draw a line from the pump indicator point through the motor indicator pump point extending to the rear motor feet line. This line represents the position of the motor shaft. The vertical distances from the motor shaft line to the pump shaft line at the two motor feet lines are the required movements of the motor feet to align the motor to the pump. On the vertical plane plot, these distances represent the required amount of shims to be added or removed. On the horizontal plane, these distances represent the amount of lateral movement required at the motor feet.

5. After any shimming or movement of the motor, repeat readings and plot data to verify the alignment.

2.9 Vibration Monitoring and Analysis

Vibration monitoring and analysis can be a useful part of a preventive or predictive maintenance program. There are a variety of vibration monitoring systems available. Some use permanently mounted sensors to continually monitor vibration levels, while other systems require readings to be taken periodically with hand held sensors. The type of system used depends on the equipment being monitored. The maintenance supervisor should compare the potential benefits of a vibration monitoring system, such as preventing damage and reducing outages, to the overall cost before deciding which system to use or whether to use any system at all.

Proximity Probe System. A proximity probe is a noncontacting type sensor which provides a direct current (DC) voltage directly proportional to shaft position relative to the probe. In a hydroelectric powerplant or a large pumping plant, proximity probes are used to measure the main shaft runout on the turbine/generator or pump/motor. A typical proximity probe system utilizes two probes per guide bearing location, radially mounted and 90 degrees apart. The monitors for the probes are centrally located and are provided with relays for alarm and shutdown with continuous indication of shaft runout in mils. The optimum alarm and shutdown points will vary from unit to unit. The best way to set these points is experimentally. The runout amplitude should be measured from speed-no-load to full load noting the normal amplitude of runout as well as the amplitude at any rough zones. If operation in the rough zone is not desirable, the alarm should be set high enough above normal amplitude to prevent nuisance alarms but low enough to indicate when the unit is in the rough zone. If the operation in the rough zone is allowed, the alarm point should be set above the maximum amplitude observed at any load. The shutdown point, if one is desired, should be set high enough to prevent nuisance tripping but low enough to prevent damage to the machine.

Accelerometer Systems. There is a number of accelerometer based vibration monitoring systems available varying greatly in complexity and capability. Accelerometers are light weight vibration

sensors that,.as the name implies, provide an electrical output proportional to the acceleration of the vibration of the machine being checked. Although accelerometers are available that can measure low frequency vibration, (less than 5 Hertz [Hz]) they are primarily used for higher frequency vibrations such as 1,800-revolutions-per-minute (rpm) electric motors. Accelerometers are generally ineffective for use on slow speed equipment such as hydroelectric units as the primary frequencies are low and the critical measurement is displacement.

Depending on the system, accelerometers may be permanently mounted, handheld, or attached with a magnetic base. A typical accelerometer system requires periodic readings to be taken at different points on each machine. The data from these readings may be stored in a portable recording instrument, plotted directly on what is known as a signature card, or displayed on a digital readout to be manually recorded. This data must then be analyzed and compared to previous readings to determine if there is a significant increase in the vibration levels indicating an impending failure.

Signature Analysis. A common means of analyzing vibration data is through the use of a spectrum plot (figure 14). A spectrum plot is an X-Y plot where the X axis represents the vibration frequency, usually in cycles per minute or cycles per second (Hertz), and the Y axis represents vibration amplitude in acceleration, velocity, or displacement units. A spectrum plot features amplitude spikes or peaks corresponding to operating frequencies of components of the equipment being tested. The initial plot provides a "signature" of the vibration for that particular piece of equipment. An increase in the amplitude of vibration at any of the various frequencies or the appearance of a new spike in subsequent plots may indicate an operational problem or impending failure.

A signature analysis program can help in scheduling outages for bearing replacement on small motors and pumps. The amplitude of vibration at the bearing pass frequency will increase as a antifriction bearing starts to fail. Signature analysis is also a good tool for hydroelectric units. Spectrum plots from proximity probes at each of the guide bearings can be used to diagnose problems such as misalignment, unbalance, or draft tube surging. To be effective with hydroelectric units, spectrum plots should be taken frequently, as vibration levels will vary with the water level of the forebay and tailrace. Subsequent readings can then be compared to readings under the same operating conditions.

In order to perform vibration analysis, a basic understanding of the characteristics of machine vibration and some knowledge of use of the test equipment is required. Training is available from many of the manufacturers of vibration monitoring systems.

2.10 Oil and Lubricants

Lubrication. The primary purpose of a lubricant is to reduce friction and wear between two moving surfaces, but a lubricant also acts as a coolant, prevents corrosion, and seals out dirt and other contaminants. In order for a lubricant to perform as intended, careful attention must be

SINGLE SPECTRUM PLOT

SET: U.S.B.R. TYPE: FFT DATE: 24-SEP-92 12:31:54
POINT ID: GLENCN FULL U3 TGX DESC: TURBINE GUIDE X FULL LOAD UNIT 3
WINDOW: HANNING LINES: 400 AVER: 2 FREQ: 0 - 1000 CPM
DETECT: PEAK TO PEAK RPM: 150 THRESHOLD: 0.1000 UNITS: mils

FREQ: 0.00 AMP: 0 ORDER: 0.000 DEG: ---

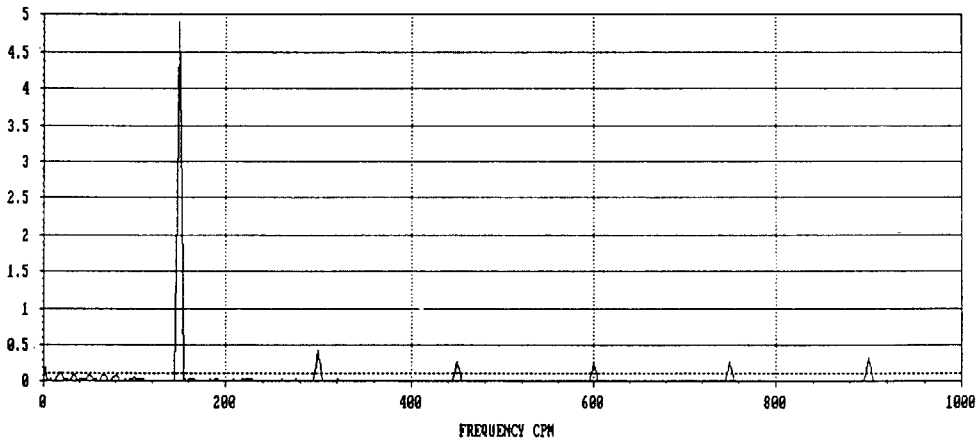

IDENTIFICATION OF SPECTRAL PEAKS ABOVE THRESHOLD

NO.	AMP.	FREQ.	ORDER	NO.	AMP.	FREQ.	ORDER
1.	4.9200	150.0	1.000				
2.	0.4260	300.0	2.000				
3.	0.3313	900.0	6.000				
4.	0.2736	450.0	3.000				
5.	0.2702	750.0	5.000				
6.	0.2618	600.0	4.000				
7.	0.1845	2.5	0.017				
8.	0.1161	17.5	0.117				

SPECTRAL ENERGY SUMMARY

OVERALL	SYNC	SUBSYNC	NONSYNC
4.99	4.972	0.3336	0.2526

Figure 14.—Single spectrum plot.

given to its selection and application as well as its condition while in use. FIST, Volume 2-4, *Lubrication of Powerplant* Equipment provides more information on lubricants and their use. The equipment manufacturer should provide specific information on the type of lubricant and periodic maintenance recommended for a particular application.

Oil Lubrication. Oil lubrication can take many forms, from a simple squirt oil can to a complex circulating system. Regardless of the method by which the oil is applied, the intent is the same, and that is to keep a lubricant film between moving surfaces. For successful lubrication, it is critical that the proper oil be chosen, properly applied, and kept clean and uncontaminated.

While it is beneficial to have as few types of oil in stock as possible, there is no one all purpose oil that can be used in all applications. Various additives, such as emulsifiers, rust and corrosion inhibitors, detergent and dispersants are added to oil to enhance their performance for a given application. Characteristics that may be desirable in one case may be very undesirable in another. For example, emulsifiers added to motor oil allow the oil to hold water in an emulsion until the engine's heat can boil it away. In bearing lubrication, where there is not sufficient heat to evaporate the water, the oil must be capable of readily separating from water.

Grease Lubrication. Grease is a lubricant consisting of a lubricating oil combined with a thickening agent. The base oil makes up 85 to 95 percent of the grease and performs the actual lubrication. The thickening agent, usually some type of soap, determines many of the characteristics of a grease such as heat resistance, water resistance, and cold weather pumpability. Various additives may also be added to improve performance.

Overheating and subsequent failure of grease lubricated bearings caused by over lubrication is a common problem. The idea that more is better coupled with the fact that it is usually difficult to determine the actual amount of grease in a bearing housing, causes many bearings to be "over greased."

Ideally, a grease lubricated bearing should be "packed" by hand so that the bearing housing is approximately one-third full of grease. When grease is applied using a grease gun, the relief plug, if so equipped, should be removed so that as the new grease is applied, all of the old grease is purged from the bearing housing. The unit should be operated approximately 30 minutes before the plug is replaced to allow excess grease to escape. If the bearing housing doesn't have a relief plug, grease should be added very infrequently to prevent over lubrication.

Many of the soap bases used in making grease are incompatible. Mixing two different types of grease will many times result in a mixture inferior to both of the component greases. As a general rule, different greases should not be mixed. If it becomes necessary to change the type of grease used on a piece of equipment, the bearing housing should be completely disassembled and thoroughly cleaned to remove all the old grease. If this is not possible, as much of the old grease as possible should be flushed out by the new grease during the initial application, and the greasing

frequency should be increased until it is determined that all of the old grease has been purged from the system.

In wicket gate greasing systems and other underwater applications, a grease must be chosen that is water resistant, somewhat adhesive, and has extreme pressure characteristics, as well as being pumpable. A grease that is impervious to water and has excellent lubricating qualities is useless if it doesn't get to the bearing. The consistency must be thin enough to be pumped through the grease lines but thick enough to stay in the bearings once it is there. Some compromise in the desired qualities is required to obtain a workable grease.

Hydraulic Oil. The main purpose of a hydraulic oil is to transmit power, but it must also lubricate the components of the hydraulic system. In many systems, a lubricating oil such as turbine oil can be used as the hydraulic fluid. If the system uses a gear pump, operates at pressures less than 1,000 pounds per square inch (psi), and has similar viscosity requirements, a turbine oil can function very well as a hydraulic oil. In systems that operate over 1,000 psi or use a piston or sliding vane pump, a fluid with an anti-wear additive is usually required. Where the system operates in an area of great temperature extremes, such as gate operators, an oil with a high viscosity index might be required to provide desirable high and low temperature viscosity characteristics.

Testing and Filtering. Cleanliness is extremely important. All seals should be installed and in good condition. Dirt, water, or other contaminants not only can cause premature wear of the bearings and hydraulic system components, but they also can cause the depletion of some of the oil's additives. Samples of the oil from large bearings and hydraulic systems should be tested for viscosity, acidity, and water content. The tests should be performed at least annually and more frequently if a problem is suspected or previous tests have indicated an impending problem. In any testing program, it is important to keep complete and accurate records of the tests. A significant change in any of the measured properties from previous tests may indicate a problem, although the oil may still be acceptable for service.

The oil from large bearings should be periodically drained, filtered, and the oil reservoir thoroughly cleaned. The most efficient method of determining when to filter is through the results of the oil tests. Filtering more frequently than is necessary is a waste of time, while waiting too long to filter the oil will shorten the oil's life and damage the equipment being lubricated.

The oil from small bearings should be periodically drained, and the reservoir or case cleaned and filled with new oil. Care should be taken when filling a bearing oil reservoir so as to not under or over fill. In many cases, over filling an oil reservoir can cause as much damage as underfilling.

Another possible source of contamination is the mixing of incompatible oils. Different types of oils or even similar oils from different manufacturers should never be mixed. Additives in different oils may not be compatible and, when mixed, may have an adverse reaction, reducing the effectiveness of the oil.

2.11 Inspection Checklist

Hydraulic Turbines and Large Pumps	*Inspection Interval*		
1. Runner or impeller		NS	A
2. Spiral case and draft tube or pump casing and suction inlet		NS	A
3. Wearing rings		NS	A
4. Main shaft packing		W	NS
5. Mechanical seals		W	NS
6. Wicket gates and facing plates		NS	A
7. Servomotors, shift ring, and wicket gate linkage		NS	A
8. Bearings	NS	D	A
9. Shaft and coupling			A
10. Generator or motor rotor			A
11. Air coolers		NS	A
12. Unit brakes		NS	A
13. Generator carbon dioxide (CO_2) system		S	A
14. Inspection reports			A
Auxiliary Pumps			
15. Pump impeller or rotor and casing		NS	A
16. Shaft and coupling		W	A
17. Packing		NS	W
18. Mechanical seals			W
19. Bearings			W
20. Pressure relief valves			NS
21. Eductors			NS

D - Daily
W - Weekly
M - Monthly
S - Semiannual
A - Annual
NS - Not scheduled (extraordinary maintenance; usually 5-year or longer intervals)

Hydraulic Turbines and Large Pumps

1. Runner or impeller
Annual. Examine runner or impeller thoroughly for cavitation or other damage. Use a nondestructive test to check for cracks in runner buckets or impeller vanes. Refer to FIST, Volume 2-5, *Turbine Repair* for repair recommendations and techniques.

Not Scheduled. Remove runner or impeller and inspect and repair areas not normally accessible.

2. Spiral case and draft tube or pump casing and suction inlet

Annual. Check condition of interior coating and repair as required. Weld repair cavitation damaged areas of draft tube liner. Inspect riveted and welded joints for leaks and corrosion and repair as required. Check mandoors for leaks and condition of door hinges. The draft tube or suction tube liner should be checked for voids between the liner and the concrete and grouted if necessary. Any leaks between the concrete and the spiral case, pump casing, draft tube, or suction tube should be monitored and, if excessive or if an increase is noted, the source of the leak should be found and repaired. The spiral case is a pressure vessel, and the repair procedure must take this into account.

Not Scheduled. If condition of interior coating is such that spot repairs are no longer effective, sandblast and repaint entire surface. Draft tube liners severely damaged by cavitation may be repaired by cutting out the damaged area and welding stainless steel plates in place that have been rolled to the proper diameter.

3. Wearing Rings

Annual. Check top and bottom wearing ring clearances at four points, 90 degrees apart. Compare to the design clearance and previous readings. If clearance is approaching 200 percent of design clearance, schedule wearing ring replacement.

Not Scheduled. Remove runner or impeller and replace or renew wearing rings when clearance exceeds 200 percent of design clearance. Wearing rings that are an integral part of the runner or impeller or the casing in some cases may be built up by welding and remachined. Replaceable wearing rings, in most cases, should not be built up by welding, as the heat of welding can induce stresses or distort the rings. If the wearing rings are replaced, the stationary rings should be supplied with an undersized inner diameter and bored concentric to the center of the unit.

4. Main Shaft Packing

Weekly. Check flow and pressure of packing cooling water. Check for excessive heat and for leakage past the packing. Tighten the packing gland as leakage becomes excessive and grease the packing box if and when required.

Not Scheduled. Remove old packing and lantern ring and thoroughly clean packing box. Check packing sleeve for excessive wear and repair as required. Install new packing, staggering adjacent rings so that joints do not coincide.

5. Mechanical Seals

Weekly. Check for excessive leakage. Properly installed mechanical seals should require very little attention. Follow manufacturer's recommendations for lubrication during extended outages.

When excessive leakage does occur, it normally is an indication that new seals are required.

Not Scheduled. Disassemble seal and thoroughly clean seal components and shaft sleeve. Check shaft sleeve for excessive wear and repair as required. Replace segments or other components as required.

6. Wicket Gates and Facing Plates

Annual. Measure clearance between gates at the top, middle, and bottom with feeler gauges with gates closed and the servomotor pressure released. Check clearance between wicket gates and upper and lower facing plates. Check gates and facing plates for cavitation damage, corrosion, or other damage. Repair or repaint as required. Check leakage past packing and tighten as required.

Not Scheduled. Disassemble and check wicket gate bushings; thrust washers, stems, and packing sleeve for wear or corrosion. If bushings are out of tolerance, replace and line bore, making sure the bushings are bored concentric and plumb. Check upper and lower facing plates for scoring, corrosion, or other damage and repair as required. Take measurements to verify that facing plates are level and parallel to one another. If necessary, replace facing plates or machine existing plates level and parallel to one another. Measure height of wicket gate and compare it to the distance between the upper and lower facing plates. If out of tolerance, build up wicket gates ends and machine back to specified dimensions. Check gate to gate sealing surfaces and build up and remachine as required. Replace shaft packing.

7. Servomotors, Shift Ring, and Wicket Gate Linkage

Annual. Observe servomotor, shift ring, and wicket gate linkage as it is moved through its full range of motion in both directions. Look for any lateral movement of shift ring indicating worn bearing pads and for any backlash in the wicket gate linkage. Check for leakage past servomotor packing glands and tighten as required. Check servomotor shaft for scoring and repair or schedule repairs as required. Verify the existence of "cushioning" on the end of the closing stroke. Adjust as necessary. Check amount of squeeze on the wicket gates by the procedure in Section III, Part B, of FIST, Volume 2-3, *Mechanical Governors for Hydroelectric Units.* Remove at least 10 percent of the wicket gate shear pins and visually inspect for any signs of fatigue cracking. If cracking is evident, inspect remaining shear pins and replace any that are questionable. Keep records of when shear pins are replaced.

Not Scheduled. Disassemble and check condition of shift ring bearing pads and wicket gate linkage bushings and pins. Replace if out of tolerance. Disassemble servomotors and check pistons and cylinder for scoring or signs of misalignment and realign as required. Bore or polish scored cylinder and renew piston by sleeving or other method. Replace piston rings. Check servomotor shaft for scoring and repair by machining and hard chrome plating or other method if necessary. Replace packing as required.

8. Bearings

Daily. Check the bearing temperature and lubricant level. Check flow and pressure of cooling water. Check flow and pressure of turbine guide bearing oil pump.

Annual. Take oil sample from all bearings, preferably while unit is running some time before a scheduled outage. If it is not possible to obtain samples with unit running, samples should be taken immediately after shutdown while the oil is still hot. The viscosity, acidity, and water content of the samples should be checked as a minimum. The oil may also be checked for the presence of wear particles or other contaminants. Based on the results of the oil tests, the oil should be drained and filtered.

Check bearing clearances with dial indicators and by "jacking" the shaft or with feeler gauges. Any change in previous readings should be investigated. Calibrate temperature sensors and oil level indicators. Check operation of alternating current (AC) and DC turbine guide bearing and thrust bearing high pressure lubrication system oil pumps. Note operating pressure of high pressure lubrication system and investigate if it is significantly different from previous readings. Check filters on high pressure lubrication system and clean or replace as required.

Check the generator thrust bearing and upper guide bearing insulation with an ohmmeter following the procedure in FIST, Volume 3-11, *Generator Thrust Bearing Insulation and Oil Film Resistance*. *If* resistance is low, investigate cause immediately.

Not Scheduled. Remove bearings and check for any damage. Light scoring and other minor damage can be removed by scraping babbitt bearings. If there is severe damage to the babbitt surface, the bearing should be rebabbitted.

Remove cooling coils and clean out any deposits. Hydrostatic test coils for several hours to check for leaks before reinstalling. Check normally inaccessible portions of the thrust bearing high pressure lubrication system for leaks or broken hoses.

9. Shaft and Coupling

Annual. Check shaft runout with dial indicator or with proximity probes and a strip chart recorder. At minimum, check runout at full load, and if possible, record the runout as the unit is loaded from speed-no-load to full load. Make note of the maximum runout magnitude and the load at which it occurred. Investigate if runout is excessive or has changed significantly from previous readings.

10. Generator or Motor

Annual. Thoroughly inspect stress carrying parts of rotor for cracks. Pay particular attention to welds on the rotor spider. Any cracks should be evaluated by engineering personnel, and a repair procedure. developed. Check bolted connections for tightness and any evidence of movement. Check stator frame for loose connections, cracks, or other damage. Check stator air gap at a minimum of four positions, top, and bottom.

11. Air Coolers

Annual. Clean exterior surfaces of coils and check for leaks.

Not Scheduled. Check interior of coils for excessive scale buildup. If scale is excessive, clean mechanically or with an approved chemical treatment. Perform a hydrostatic test after cleaning to check for leaks.

12. Unit Brakes

Monthly. Check condition of brake air line filters and lubricators. If lubricator is not installed, operate unit jacks to lubricate brake cylinders.

Annual. Measure brake shoe thickness and check condition of brake ring. Operate brake cylinders to check for any binding or sticking. If necessary disassemble brake cylinders, and repair.

13. Generator $C0_2$ System

Monthly. Check electrical control circuits and indicating lights.

Semiannual. Weigh all $C0_2$ cylinders and replace cylinders in which the $C0_2$ content weighs less than 90 percent of the weight marked on the cylinder by the supplier.

Annual. Check $C0_2$ system by disconnecting the detonators of all except those $C0_2$ cylinders that are under test and operate the actuating contacts by hand to release $C0_2$ into the generator housing. Observe for proper operation and for leaks in the system and generator housing. $C0_2$ cylinders that are being removed because of loss of weight may be used for this test. All $C0_2$ cylinders must be discharged and then hydrostatically tested by qualified suppliers every 12 years. Any cylinder that has been discharged that has not been hydrostatic tested within 5 years must be hydrostatic tested before refilling.

14. Inspection Reports

Inspection reports similar to the Hydroelectric Unit, Mechanical Inspection Report (figure 15) or the Large Pump Inspection Report (figure 16) should be filled out annually to record data obtained during the annual inspection.

Auxiliary Pumps

15. Impeller or Rotor and Casing

Annual. If inspection ports are available, the pump impeller should be inspected annually. Check for leaks from casing at gasketed joints and tighten or replace gaskets as required. Take ammeter readings of pump motor with pump at full capacity. A decrease in amperage indicates a decrease in pump output, which suggests some maintenance is required.

HYDROELECTRIC UNIT, MECHANICAL INSPECTION REPORT

PROJECT_____ POWERPLANT_____ UNIT NO._____ DATE_____

WICKET GATE CLEARANCES

CLEARANCES BETWEEN FACING PLATES AND WICKET GATES			CLEARANCE BETWEEN WICKET GATES, CLOSED POSITION, PRESSURE RELEASED			CLEARANCES BETWEEN FACING PLATES AND WICKET GATES			CLEARANCE BETWEEN WICKET GATES, CLOSED POSITION, PRESSURE RELEASED		
GATE	UPPER	LOWER	TOP	MIDDLE	BOTTOM	GATE	UPPER	LOWER	TOP	MIDDLE	BOTTOM
1						13					
2						14					
3						15					
4						16					
5						17					
6						18					
7						19					
8						20					
9						21					
10						22					
11						23					
12						24					

AIR GAP, BEARING, AND WEARING RING CLEARANCES

READING	POSITION READING TAKEN			
	North	South	East	West
MAIN GENERATOR AIR GAP				
EXCITOR AIR GAP				
UPPER GENERATOR GUIDE BEARING				
LOWER GENERATOR GUIDE BEARING				
TURBINE GUIDE BEARING				
UPPER WEARING RING				
LOWER WEARING RING				

SHAFT RUNOUT

BEARING	RUNOUT MAGNITUDE AT FULL LOAD		MAXIMUM RUNOUT MAGNITUDE	
	NORTH/SOUTH	EAST/WEST	MAGNITUDE	LOAD (MW)
UPPER GENERATOR GUIDE BEARING				
LOWER GENERATOR GUIDE BEARING				
TURBINE GUIDE BEARING				

Figure 15a.—Hydroelectric unit, mechanical inspection report (sheet 1 of 2).

GENERAL INSPECTION

Note type of paint and condition of painted surfaces. Check unpainted surfaces for corrosion, wear, scoring or other damage. Check operation of pumps and other equipment. Document any repairs made as part of inspection. If not checked during this inspection, note date last inspected.

PENSTOCK

Interior_____

Exposed Exterior, Expansion Joints_____

SCROLL CASE_____

DRAFT TUBE_____

DRAFT TUBE AND SCROLL CASE ACCESS DOORS_____

TURBINE RUNNER

Type, Mfg., and Total No. of Pounds of Welding Rod or Wire Used_____

Approximate Area Repaired----------_____Square Inches

WICKET GATES

Gate Body_____

Gate Stems, Bushings, and Packing_____

Wicket Gate Linkage, Shift Ring, Ect._____

Squeeze on Wicket Gates Measured at Servomotors ---------- Right Servomotor____Inches, Left Servomotor____Inches

MAIN SHAFT PACKING OR MECHANICAL SEALS_____

LUBRICATION SYSTEMS

Name, Mfg., and Viscosity of Oil_____

Name, Mfg., and Grade of Grease_____

Laboratory Tests of Oil_____

AC and DC Turbine Bearing Oil Pumps_____

Thrust Bearing High Pressure Lubrication System_____

Oil Coolers_____

Wicket Gate Greasing System_____

UNIT BRAKES_____

GENERATOR ROTOR_____

GENERATOR AIR COOLERS_____

OTHER COMMENTS AND RECOMMENDATIONS_____

Inspection Made By_____

Figure 15b.—Hydroelectric unit, mechanical inspection report (sheet 2 of 2).

LARGE PUMP INSPECTION REPORT

PROJECT_____ PUMPING PLANT_____ UNIT NO._____ DATE_____

AIR GAP, BEARING, AND WEARING RING CLEARANCES				
READING	POSITION READING TAKEN			
	North	South	East	West
MOTOR AIR GAP				
UPPER MOTOR GUIDE BEARING				
LOWER MOTOR GUIDE BEARING				
IMPELLER GUIDE BEARING				
UPPER WEARING RING				
LOWER WEARING RING				

SHAFT RUNOUT		
BEARING	RUNOUT MAGNITUDE AT RATED SPEED AND LOAD	
	NORTH/SOUTH	EAST/WEST
UPPER MOTOR GUIDE BEARING		
LOWER MOTOR GUIDE BEARING		
IMPELLER GUIDE BEARING		

GENERAL INSPECTION

Note type of paint and condition of painted surfaces. Check unpainted surfaces for corrosion, wear, scoring or other damage. Check operation of pumps and other equipment. Document any repairs made as part of inspection. If not checked during this inspection, note date last inspected.

DISCHARGE PIPE

Interior_____

_____

Exposed Exterior, Expansion Joints_____

_____

PUMP CASING_____

_____

PUMP SUCTION_____

_____

Figure 16a.—Large pump inspection report (sheet 1 of 2).

PUMP CASING AND PUMP SUCTION ACCESS DOORS_____

_____

IMPELLER

Type, Mfg., and Total No. of Pounds of Welding Rod or Wire Used_____

_____

Approximate Area Repaired ----------_____Square Inches

MAIN SHAFT PACKING OR MECHANICAL SEALS_____

_____

LUBRICATION SYSTEMS

Name, Mfg., and Viscosity of Oil_____

Name, Mfg., and Grade of Grease and Where Used_____

_____

Laboratory Tests of Oil_____

_____

AC and DC Bearing Oil Pumps_____

_____

Oil Coolers_____

_____

UNIT BRAKES_____

_____

MOTOR ROTOR_____

_____

MOTOR AIR COOLERS_____

_____

OTHER COMMENTS AND RECOMMENDATIONS_____

_____

Inspection Made By_____

Figure 16b.—Large pump inspection report (sheet 2 of 2).

Not Scheduled. Disassemble pump if there is a reduction in capacity or pressure, an increase in vibration, or other indication that a problem exists or at intervals determined by past maintenance experience. Check for worn parts and repair or replace as required.

16. Shaft and Coupling

Weekly. Check shaft and coupling visually for excessive runout or vibration. Look for loose coupling bolts or other damaged coupling components. Lubricate if required.

Annual. Check shaft runout with dial indicator or with proximity probes. Check shaft alignment if runout is excessive.

17. Packing

Weekly. Check for excessive heat and for proper amount of leakage. Tighten packing as required.

Not Scheduled. Remove old packing and lantern ring and thoroughly clean packing box. Check packing sleeve for excessive wear and repair or replace as required. Install new packing, staggering adjacent rings so that joints do not coincide.

18. Mechanical Seals

Weekly. Check for excessive leakage. Properly installed mechanical seals should require very little maintenance. When excessive leakage does occur, it normally is an indication that new seals are required.

19. Bearings

Weekly. Check for vibration and for adequate lubrication. Prior to complete failure, vibration will increase, and the bearing will usually become extremely noisy. As it is sometimes difficult to detect an increase in noise or vibration, some sort of vibration monitoring system can be helpful. If a bearing fails prematurely, determine cause and correct it before restarting the pump. Insufficient or excessive lubrication, contamination of the lubricant, or misalignment of the shaft or bearings are some possible causes of premature bearing failure.

20. Pressure Relief Valves

Annual. All positive displacement pumps, such as in hydraulic systems, must have a pressure relief valve installed in its discharge line ahead of any valve or obstruction that could restrict flow. In some pumps, the relief valve is an integral part of the pump. Test all relief valves for proper operation and setting.

21. Eductors

Not Scheduled. Disassemble and clean any scale or rust build up from nozzle, eductor body, and piping. Repair or replace nozzle if damaged by corrosion or cavitation.

III. PENSTOCKS, OUTLET PIPES, GATES, VALVES, AND AUXILIARY PIPING SYSTEMS

3.1 Penstocks and Outlet Pipes

Penstocks and outlet pipes are steel, concrete, or in some cases wood stave water conduits. Penstocks and outlet pipes may be entirely or partially embedded in concrete, placed under ground, or carried on suitable supports above ground or in a tunnel. A penstock is conduit that conveys water from a reservoir, forebay, or other source to a hydraulic turbine in a hydroelectric powerplant. An outlet pipe is a conduit that conveys water from a reservoir for irrigation, run of the river, municipal or industrial water supply, or other purposes. Both penstocks and outlet pipes may have expansion joints, manholes, drain and fill lines, and other accessories which may require periodic maintenance.

Many of the penstocks and outlet pipes in Reclamation facilities are over 40 years old. Besides periodic inspections and maintenance, the condition of these conduits should be evaluated as to their safety. Due to corrosion and other factors, a penstock or outlet pipe may no longer be safe for water hammer conditions that may occur during a load rejection or closure of an outlet valve. *Guidelines for Evaluating Aging Penstocks* published by the American Society of Civil Engineers provides useful information and engineering techniques for the assessment of all types of penstocks and should be consulted in setting up an evaluation program.

3.2 Gates and Valves

General. There are numerous types of gates and valves installed in Reclamation powerplants and dams. Figures 17, 18, and 19 illustrate some common gate and valve layouts. A gate or valve's primary purpose is to regulate flow or to act as a secondary shutoff. The following definitions are taken from the *Handbook of Applied Hydraulics*, Third Edition:

Gate. *A gate is a closure device in which a leaf or closure member is moved across the fluidway from an external position to control the flow of water.*

Valve. *A valve is a closure device in which the closure member remains fixed axially with respect to the fluidway and is either rotated or moved longitudinally to control the flow of water.*

Guard gates or valves. *Guard gates or valves operate fully open or closed and function as a secondary device for shutting off the flow of water in case the primary closure device becomes inoperable. Guard gates are usually operated under balanced-pressure no-flow conditions, except for closure in emergencies.*

Regulating gates and valves. *Regulating gates and valves operate under full pressure and flow conditions to throttle and vary the rate of discharge.*

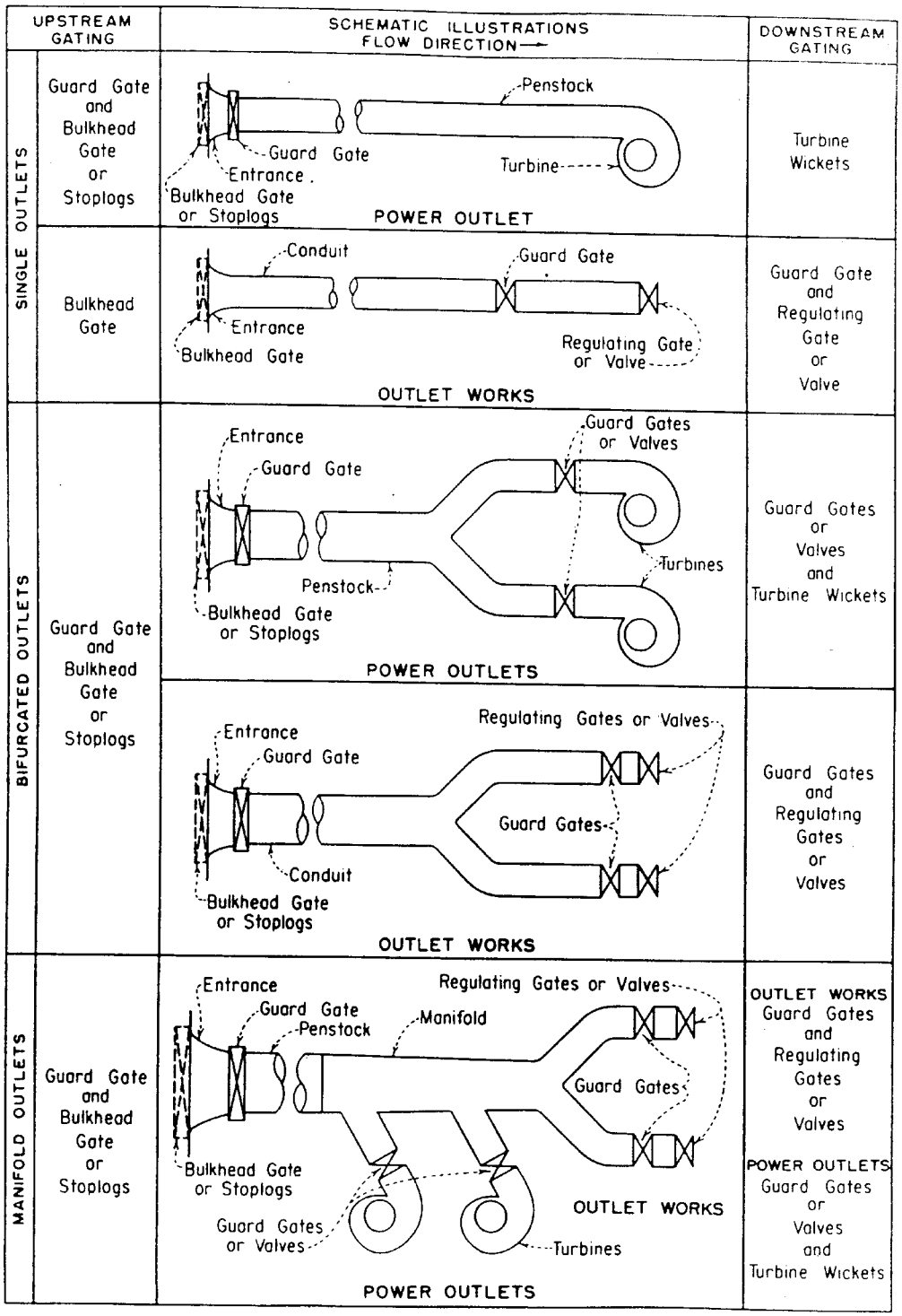

Figure 17.—Common gate and valve arrangements.

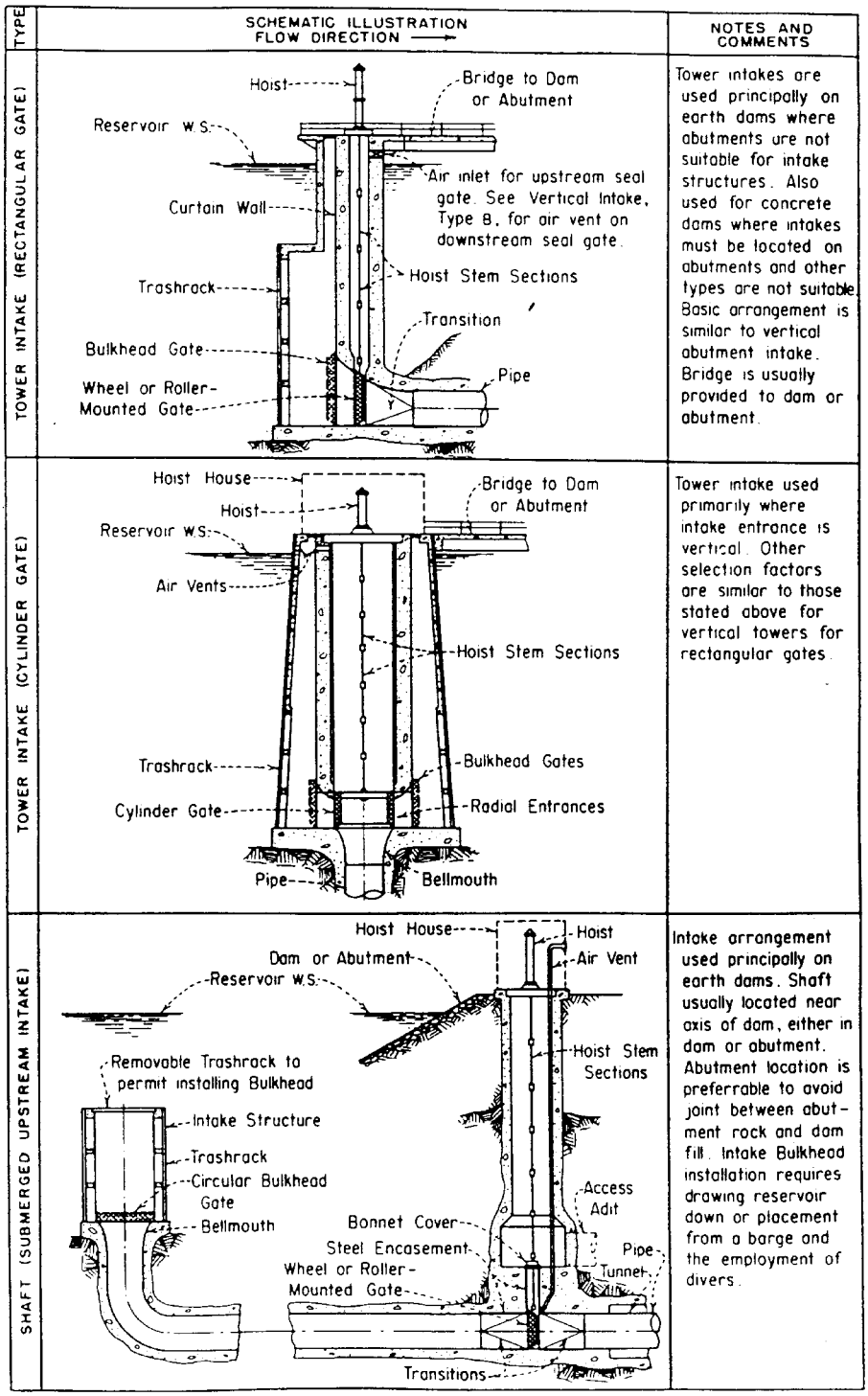

Figure 18.—Intake arrangements.

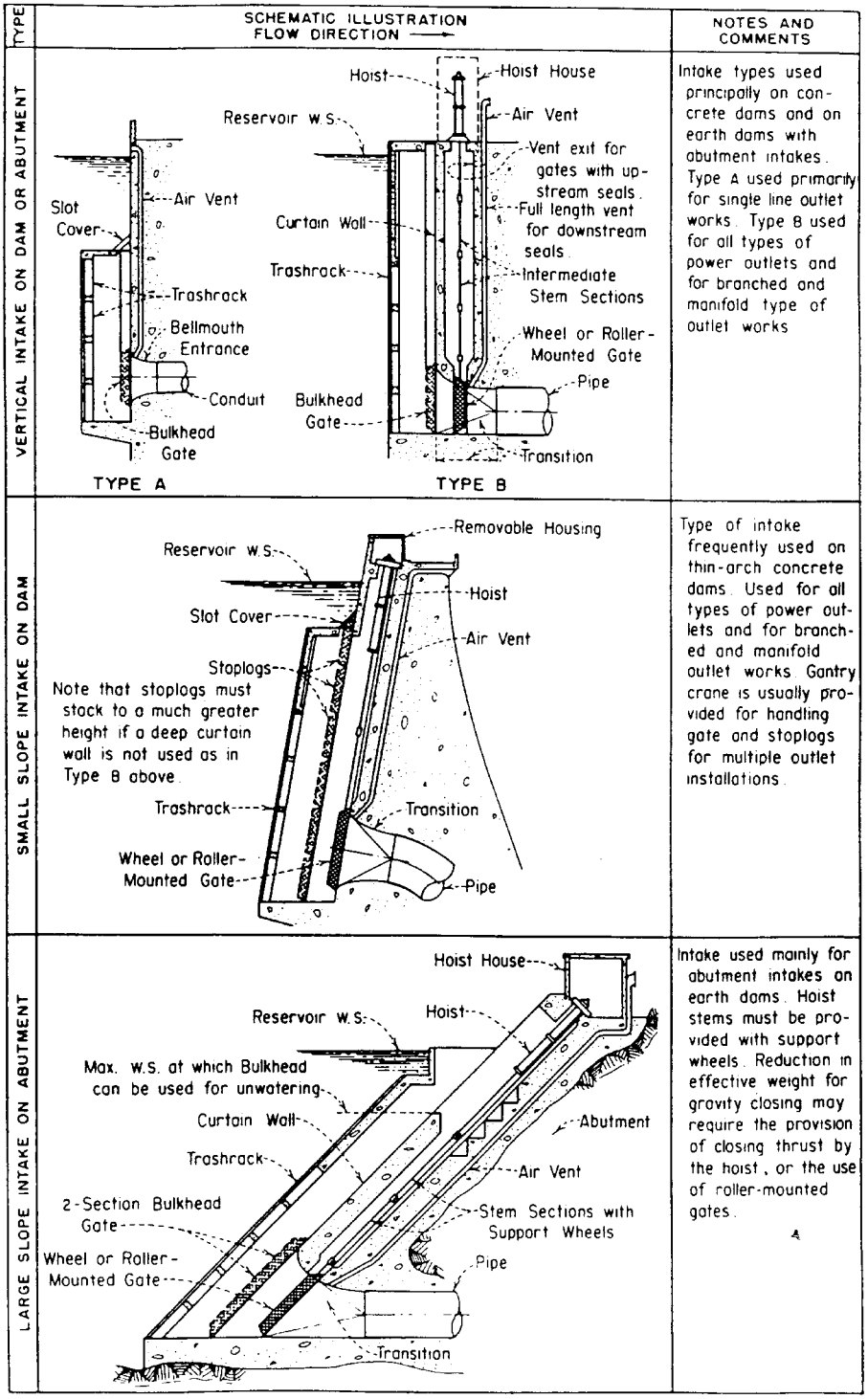

Figure 19.—Intake arrangements.

Bulkhead gates. *Bulkhead gates are usually installed at the entrance and used to unwater fluidways for inspection or maintenance and are nearly always opened or closed under balanced pressures.*

Stop logs. *Stop logs are installed in the* same manner and *perform the* same *function as bulkhead gates. A stop log may be considered as a section of a bulkhead gate which has been made of several units to permit easier handling.*

Gates. Closure or regulating devices meeting the above definition of "gates" appear in a variety of forms. The more common types are discussed in the following sections.

1. Radial or Tainter Gates. Radial gates (figure 20) or tainter gates as they are also called, are used primarily as spillway crest gates but are also used in canals or other open channel applications. A radial gate basically consists of a skinplate, shaped like a cylindrical section, connected to radial arms which converge to a horizontal pivot pin. The gate is raised or lowered usually by a wire rope or chain and sprocket hoist.

2. Drum Gates. Drum gates (figure 21) are used as spillway crest gates. A drum gate consists of a long buoyant vessel or "drum" hinged to the spillway crest. A water chamber below the drum is filled or drained to raise or lower the gate.

3. Slide Gates. Slide gates, in their various configurations, may be used as guard or regulating gates for closed, high pressure conduits, such as penstocks and outlet works, or for open channel flow such as canals. The construction of a slide gate can vary a great deal. The cast iron slide gate consists of a flat or rectangular leaf that is moved within a frame over a circular or rectangular opening. The leaf is connected to a hoist by a stem which is supported by guides attached to the concrete above the opening. High pressure gates and outlet gates are also slide gates. They consist of a leaf, a body, and bonnet embedded in concrete, and some type of hoist for raising and lowering the leaf. Since slide gates usually seal downstream, the downstream mating surfaces between the leaf and the body act as bearing and sealing surfaces. Figure 22 shows an outlet works slide gate.

4. Wheel- and Roller-Mounted Gates. Wheel-mounted (fixed wheel gates) and roller-mounted (coaster gates) gates consist of a flat structural steel gate leaf with a roller system or a series of wheels fixed to the leaf to transfer the hydraulic load from the gate to tracks imbedded in concrete. These gates are used as spillway gates or as the primary guard gate for a penstock or outlet conduit. Depending on the application, the hoist for the gate may be a hydraulic cylinder or some type of a mechanical hoist. Figures 23 and 24 show typical installations.

5. Jet Flow Gates. Jet flow gates are used strictly for water regulation through outlet conduits. A jet flow gate is similar to a slide gate consisting of a leaf, a body, a bonnet, and a hoist to position the leaf. The outlet of the gate is circular in cross section, rather than square or rectangular as a slide gate, with a conical nozzle upstream of the gate. This nozzle produces a contracted, jet type discharge that jumps over the gate leaf slot. Figure 25 shows a jet flow gate.

6. Cylinder Gates. Cylinder gates are used on circular, vertical intake structures and can be used as a guard gate for penstocks or outlet conduits or to regulate flow. A cylinder gate consists of a cylindrical

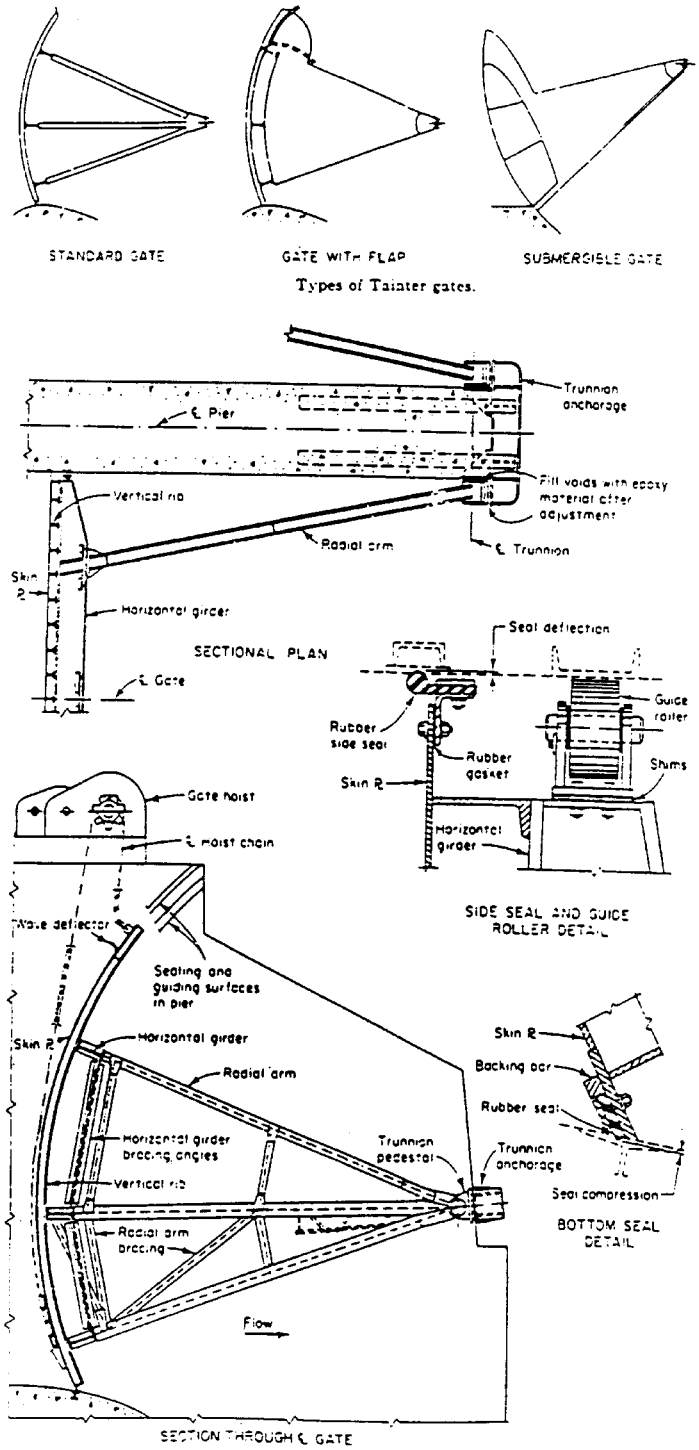

Figure 20.—Radial gate.

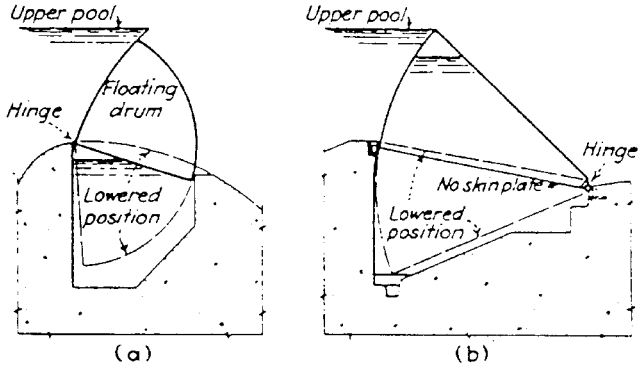

Drum gates.

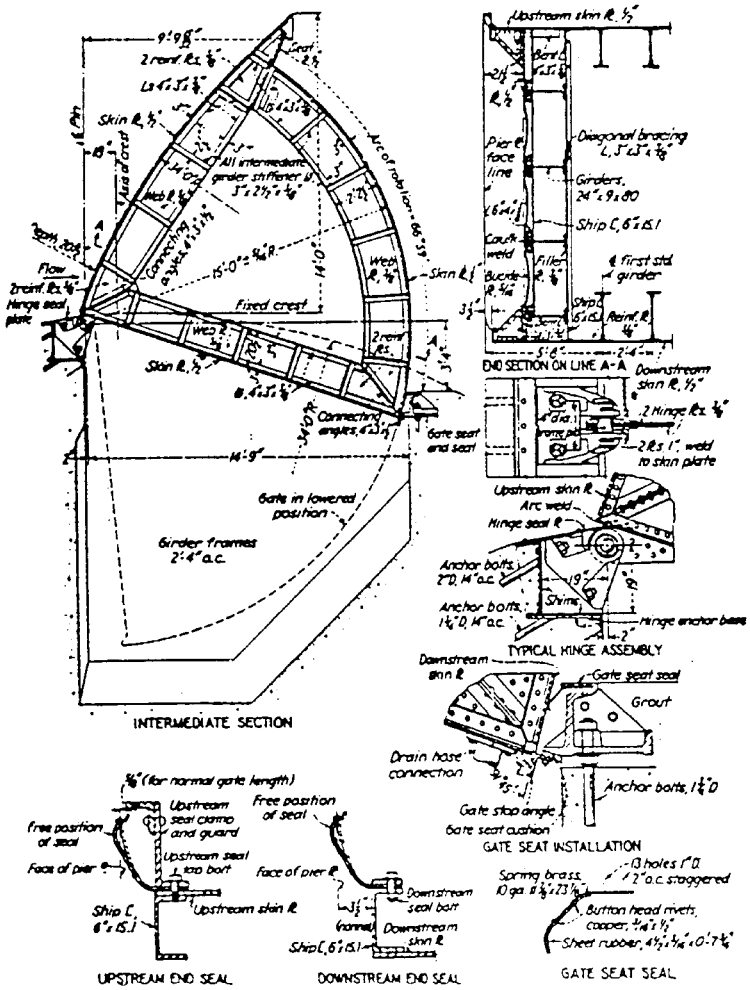

Figure 21.—Drum gate.

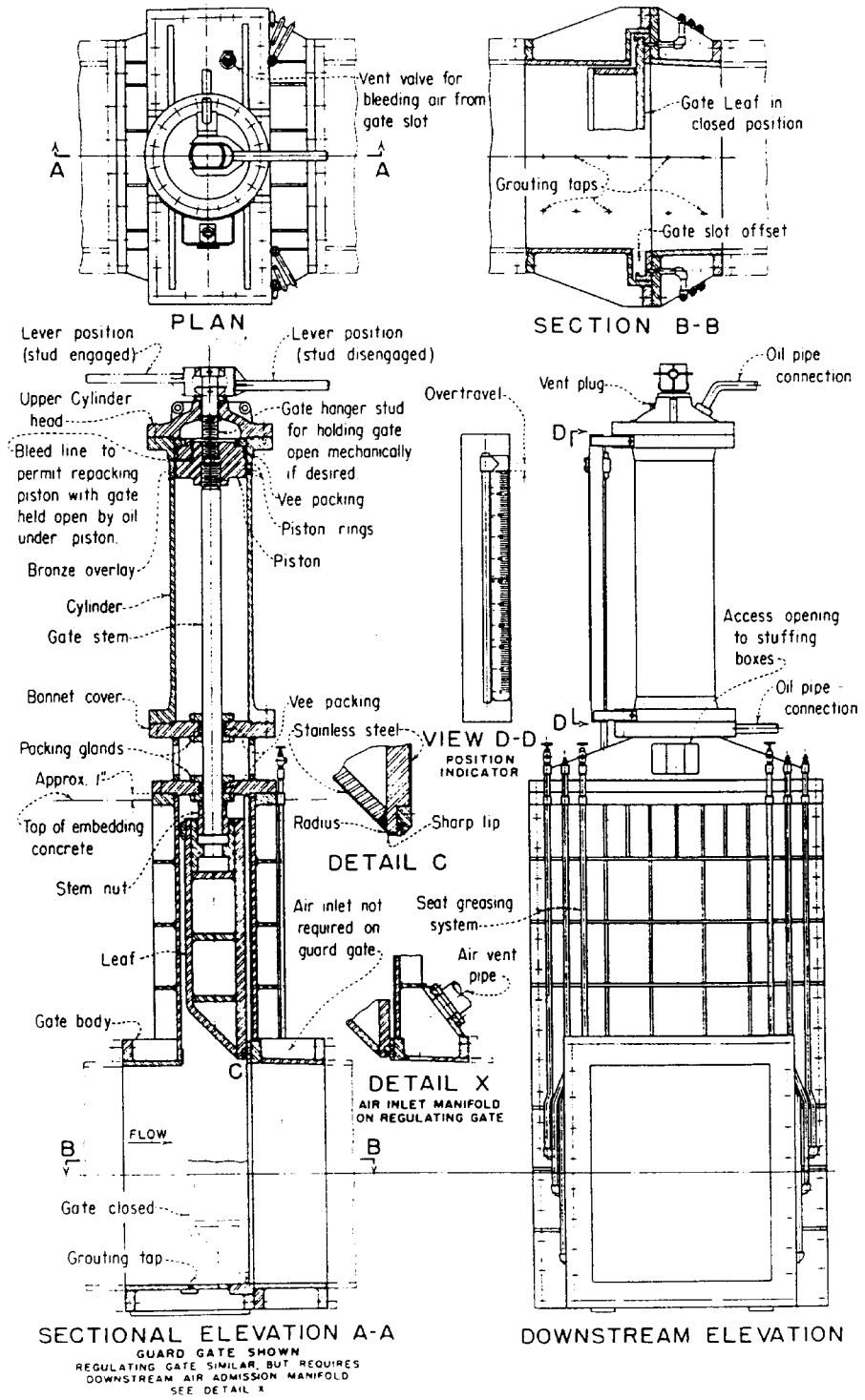

Figure 22.—Slide gate.

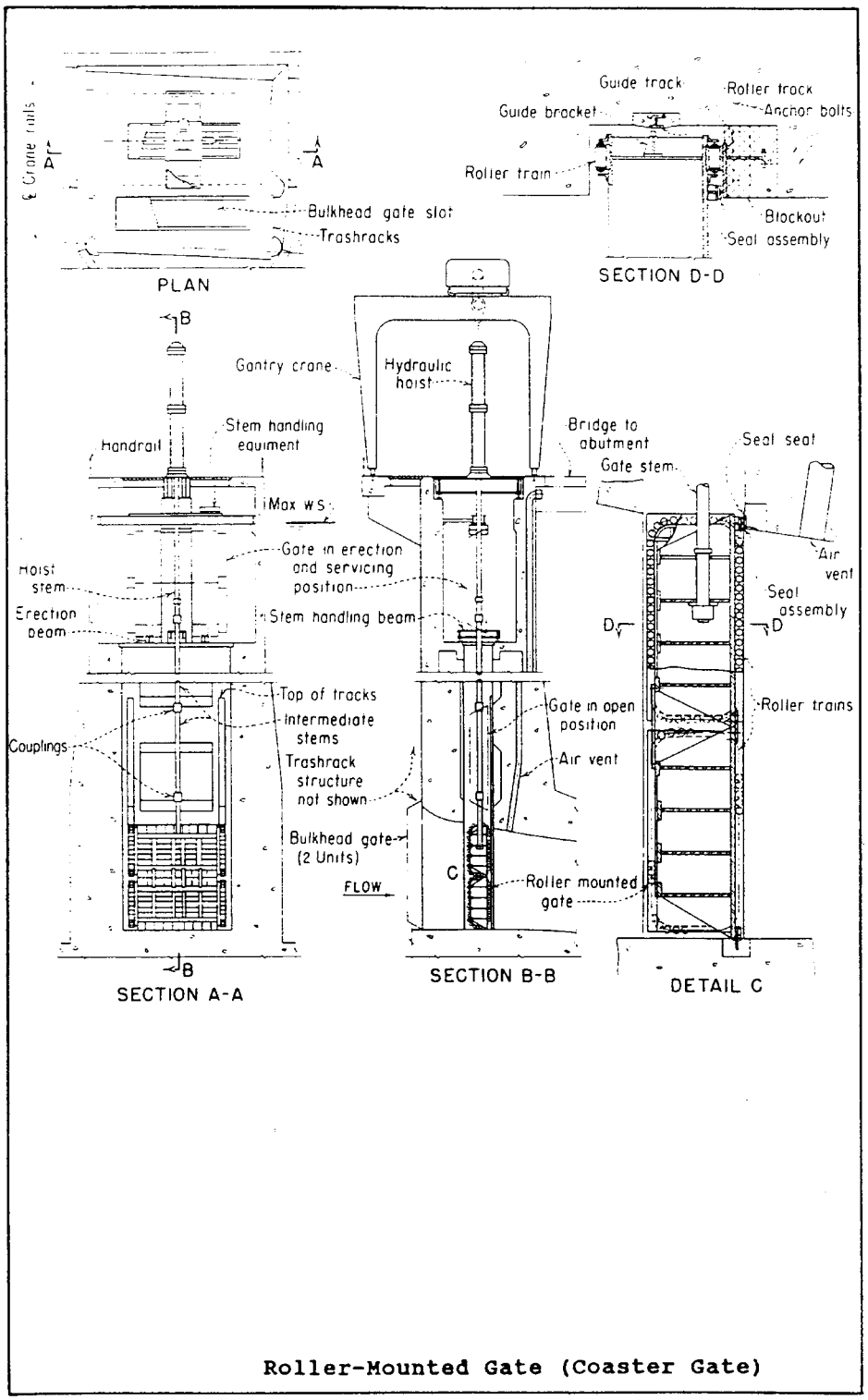

Figure 23.—Roller-mounted gate (coaster gate).

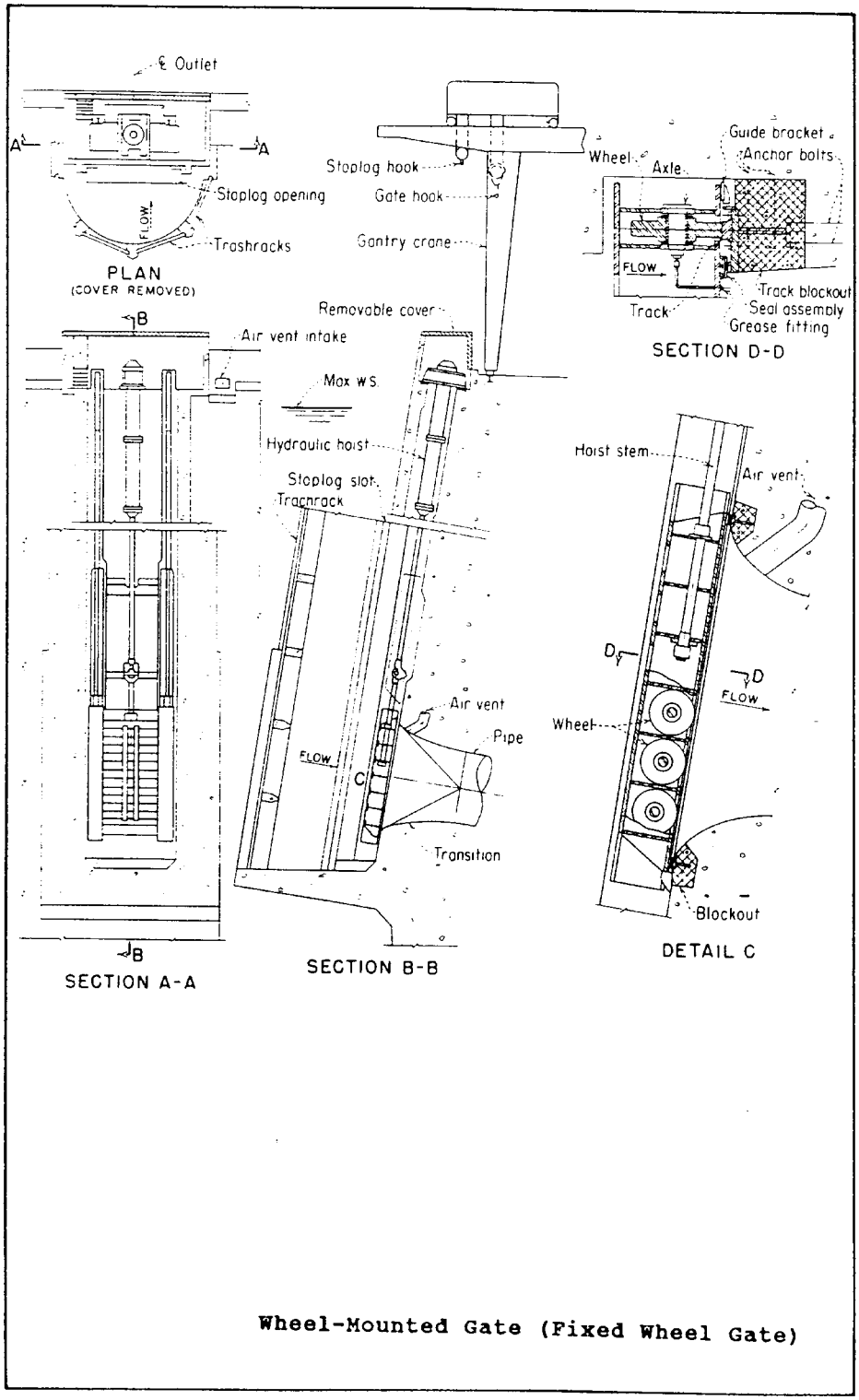

Figure 24.—Wheel-mounted gate (fixed wheel gate).

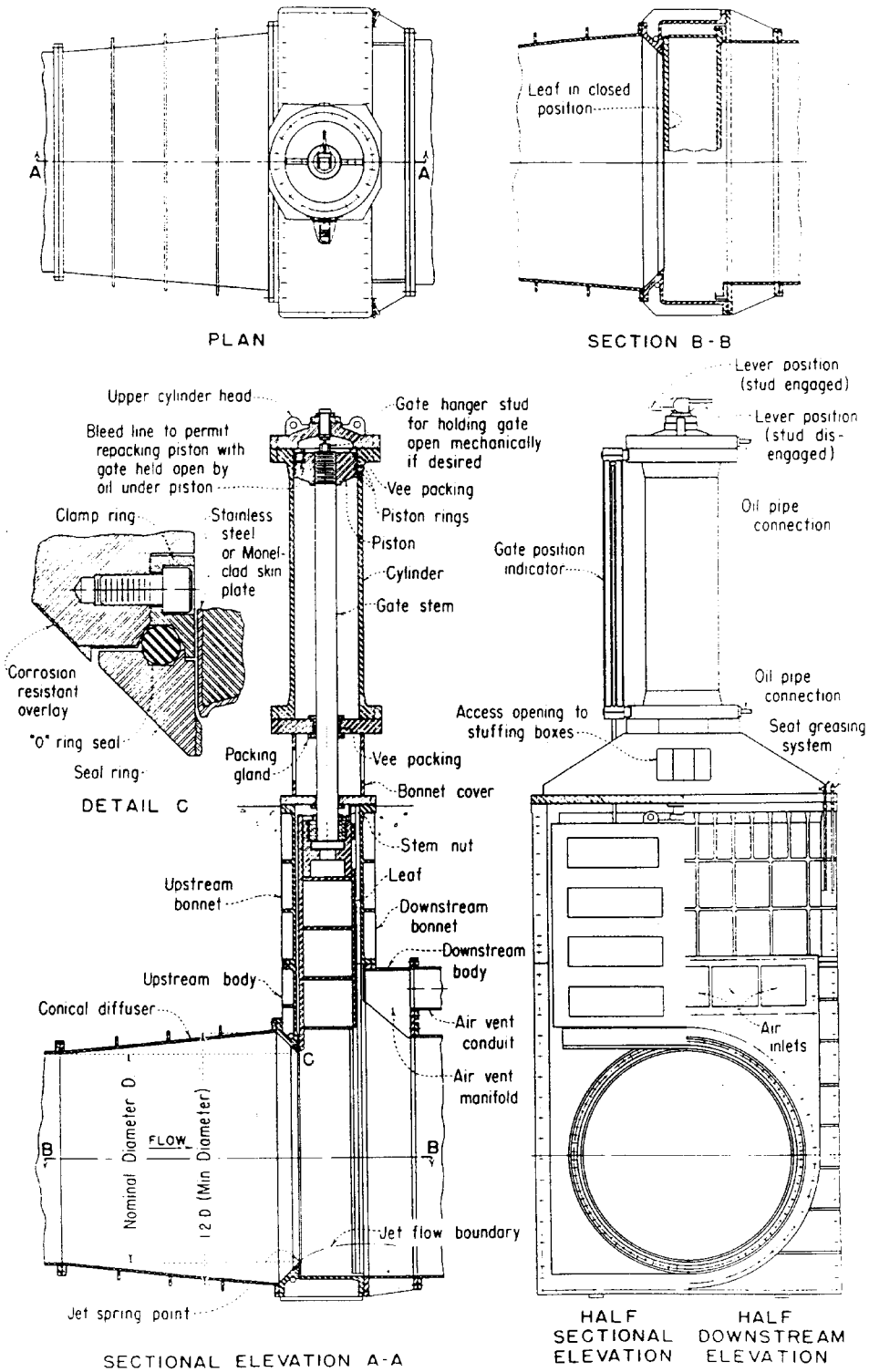

Figure 25.—Jet flow gate.

shell which is raised or lowered to open or close radial openings on the intake structure (figure 26). Mechanical or hydraulic hoists may be used to move the gates.

7. Ring-Follower Gates. Ring-follower gates are used as guard gates for penstocks or outlet conduits and are not suitable for water regulation. A ring-follower gate is a slide gate with a leaf, body, bonnet, and a hoist, usually a hydraulic cylinder, to move the leaf The ring-follower gate leaf consists of two parts: the bulkhead part which blocks the fluid flow in the closed position and the "ring" portion which has a circular opening matching the diameter of the penstock or conduit to provide a unobstructed water passage in the open position. A ring-follower gate is shown in figure 27.

8. Ring-Seal Gates. Ring-seal gates are a type of ring-follower gate with a movable seal and a wheel- or roller-mounted gate leaf. The gate seal is hydraulically actuated by water pressure, either from the conduit or an external source, and may be located in the housing or the leaf. The hoist may be a mechanical or hydraulic cylinder. Ring-seal gates are shown in figures 28 and 29.

9. Bulkhead Gates and Stop Logs. Bulkhead gates and stop logs are installed under balanced, no flow conditions, and are used to allow the unwatering of a waterway such as a outlet pipe, penstock, or turbine draft tube. In the case of outlet pipes and penstocks, they are placed as far upstream as possible to allow the complete unwatering of the waterway and provide access to gates or valves in the waterway. Bulkhead gates and modern stop logs are both constructed of structural steel with rubber seals and are virtually identical in appearance. Stop logs are differentiated from bulkhead gates in that they employ more than two sections and, when all the sections are installed, extend above the reservoir surface. Bulkhead gates are made up of one or two sections and only cover the entrance to the waterway. Bulkhead gates and stop logs are usually installed with a gantry or mobile crane. Figures 30 and 31 show typical bulkhead gate and stop log installations.

Valves. Valves, like gates, can regulate flow or act as guard valves to penstocks and outlet conduits. This section will describe the most common valve types in use in Reclamation facilities.

1. Tube Valves. Tube valves are used primarily as regulating valves in outlet conduits. The tube valve is essentially a needle valve with the downstream needle omitted to eliminate the cavitation damage experienced with normal needle valves. A hollow cylinder or tube is actuated by a mechanical operator to seal against a valve seat on the downstream end of the valve. Like a needle valve, the fluid way converges at the outlet. A tube valve is shown in figure 32.

2. Hollow-Jet Valves. Hollow-jet valves are used as regulating valves and are similar in construction to a tube valve. The closure member of the hollow-jet valve is the needle which moves upstream to seal against its valve seat. The fluid way is not converging so that the discharge is in the shape of a hollow jet. The hollow-jet valve can be operated either hydraulically or mechanically. Figures 33 and 34 are examples of hollow-jet valves.

3. Butterfly Valves. Butterfly valves are most commonly used as guard valves on penstocks and outlet conduits. They are normally used for flow regulation only if the head differential across the leaf is small. The butterfly valve consists of a cylindrical or conical shaped body with a circular leaf, mounted on a horizontal or vertical shaft, perpendicular to the fluidway. An external actuator, usually hydraulic, rotates the leaf 90 degrees to fully open or close the valve. A butterfly valve is shown in figure 35.

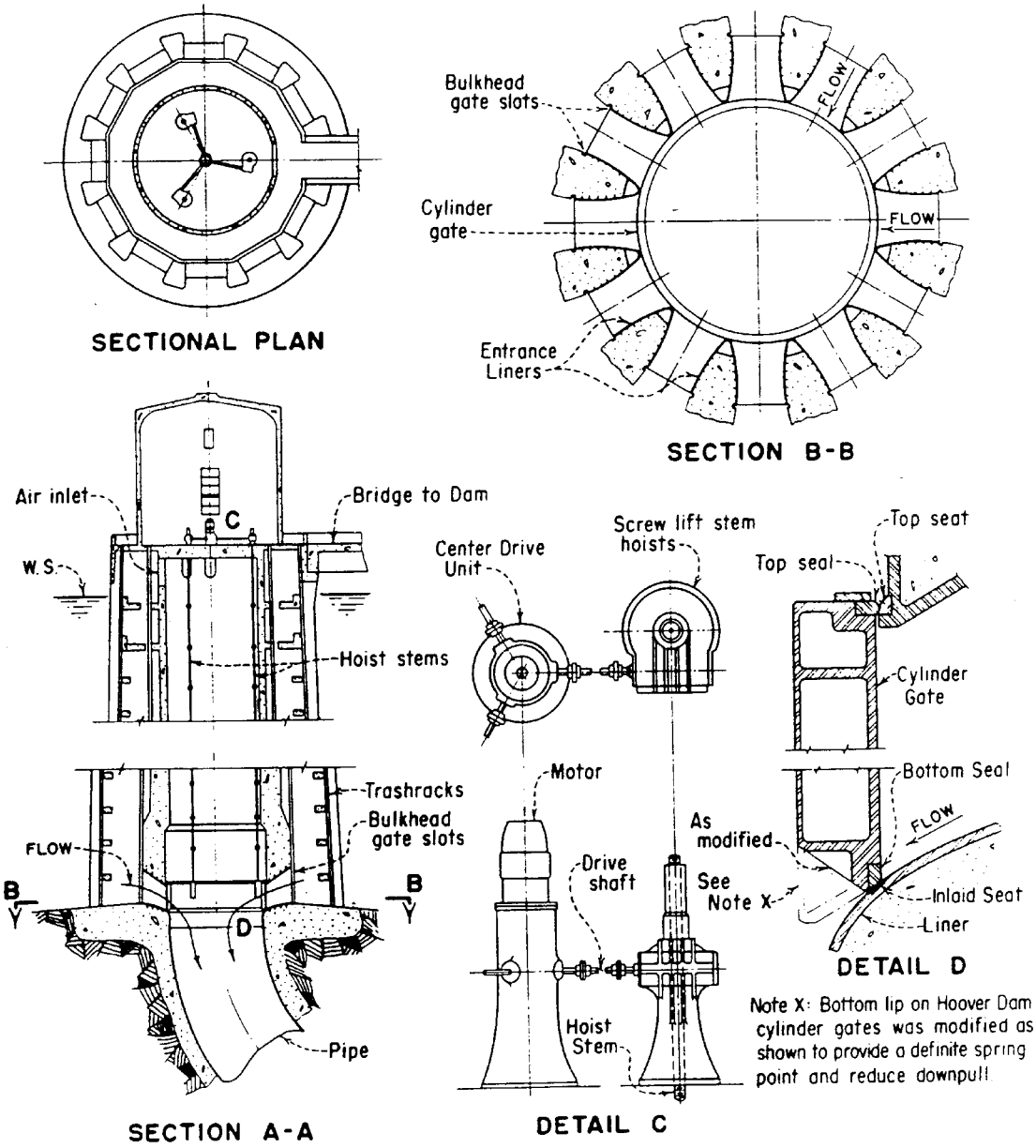

Figure 26.—Cylinder gate.

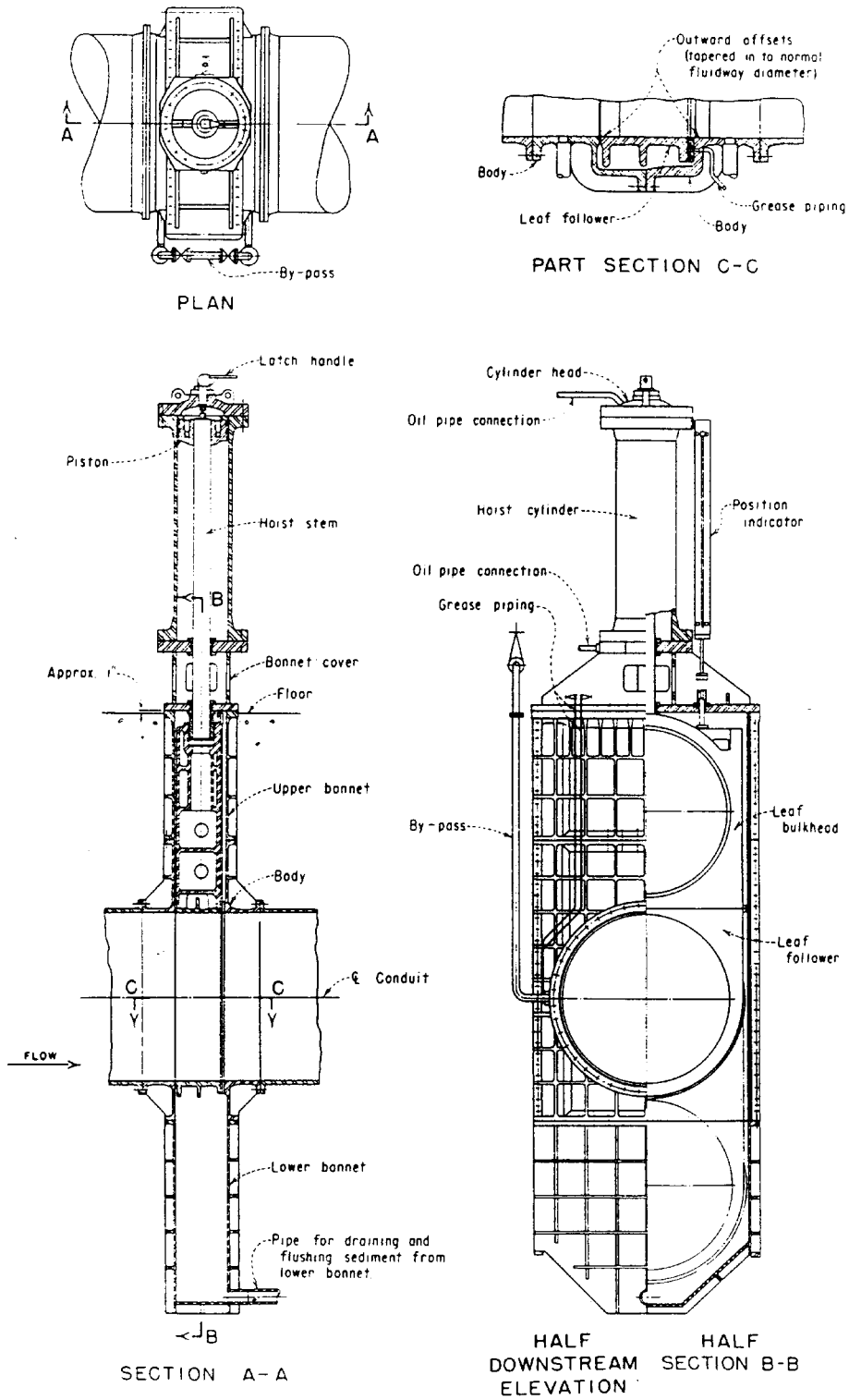

Figure 27.—Ring-follower gate.

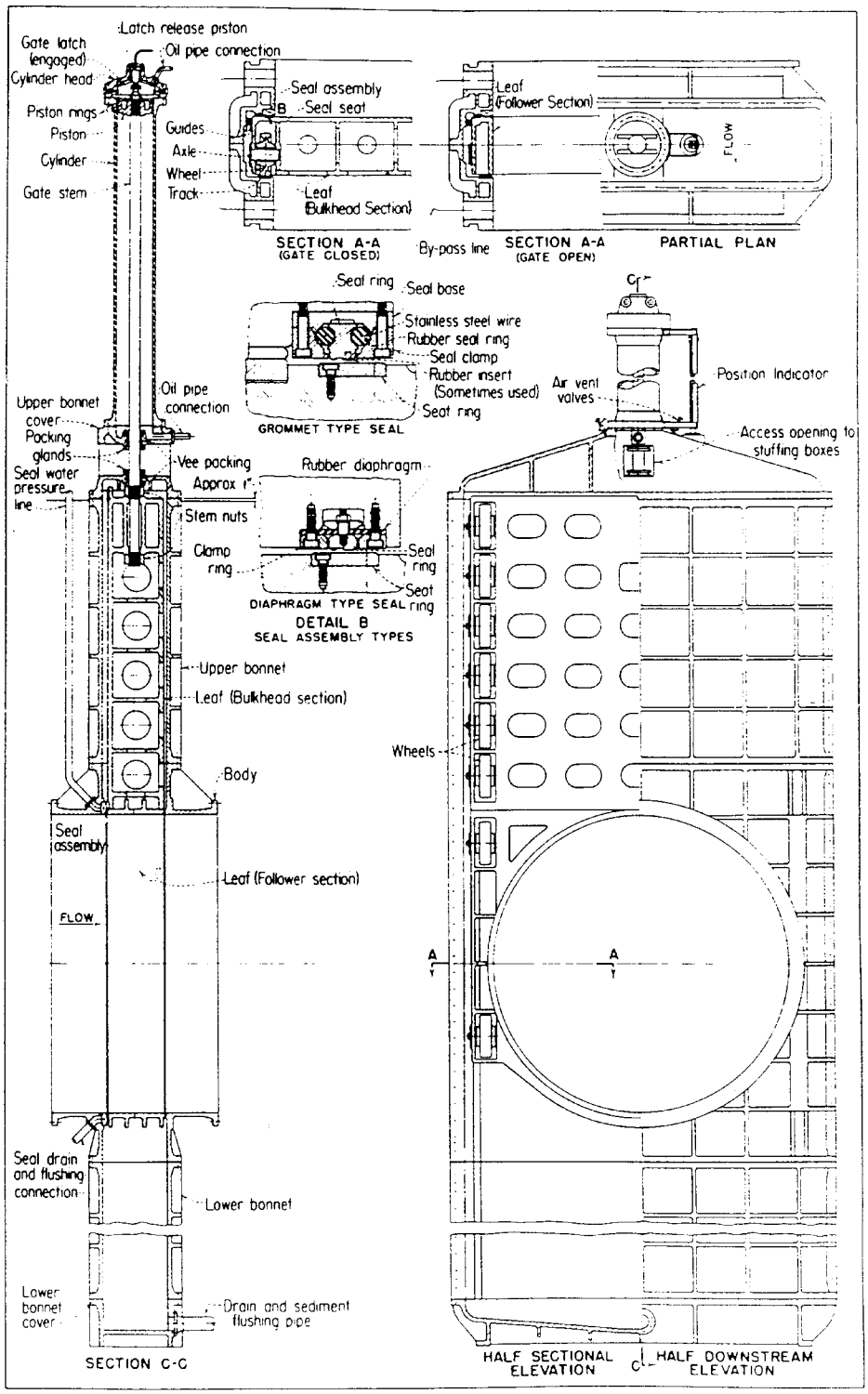

Figure 28.—Ring seal gate (hydraulically operated).

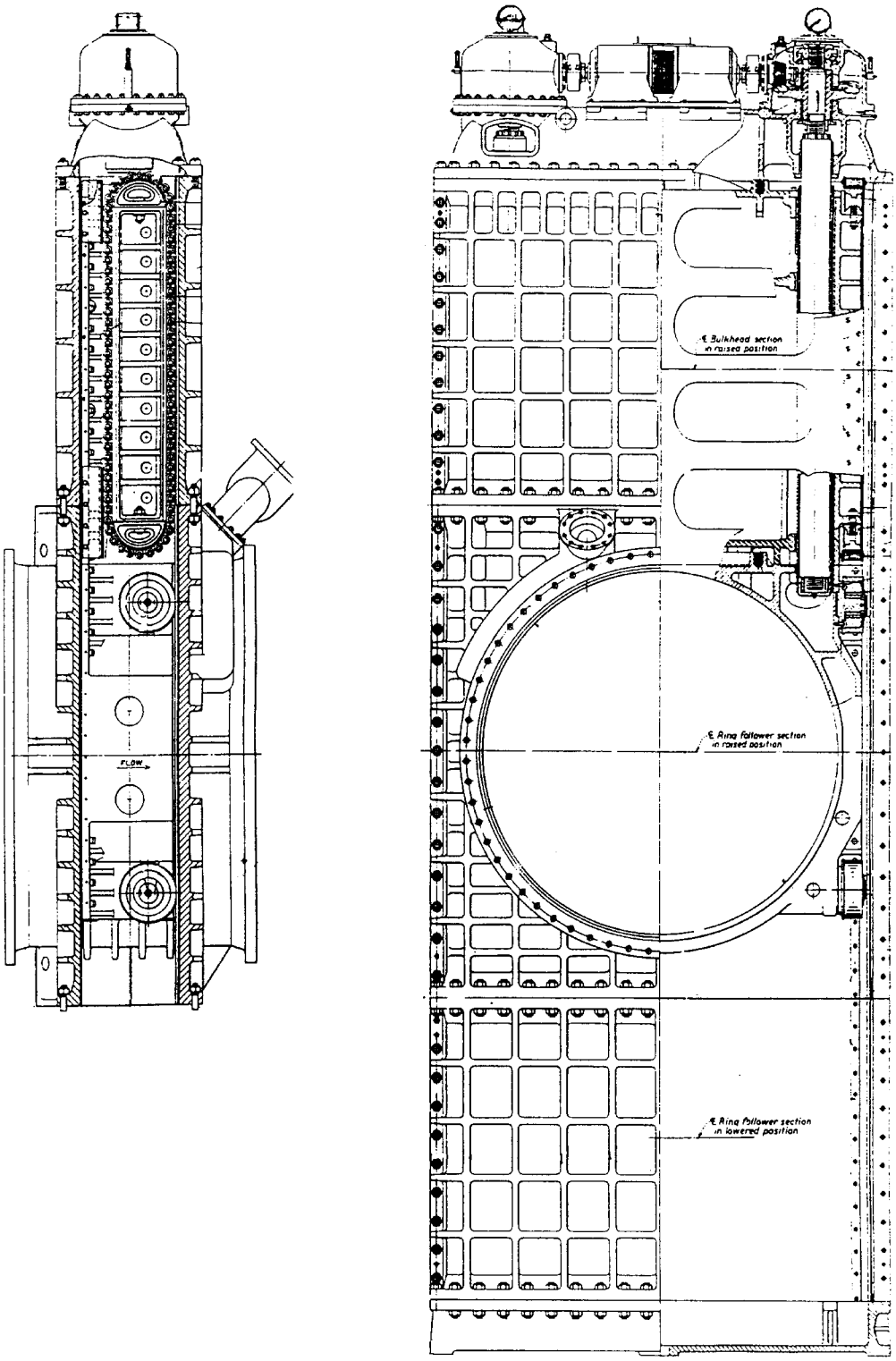

Figure 29.—Ring seal gate (mechanically operated).

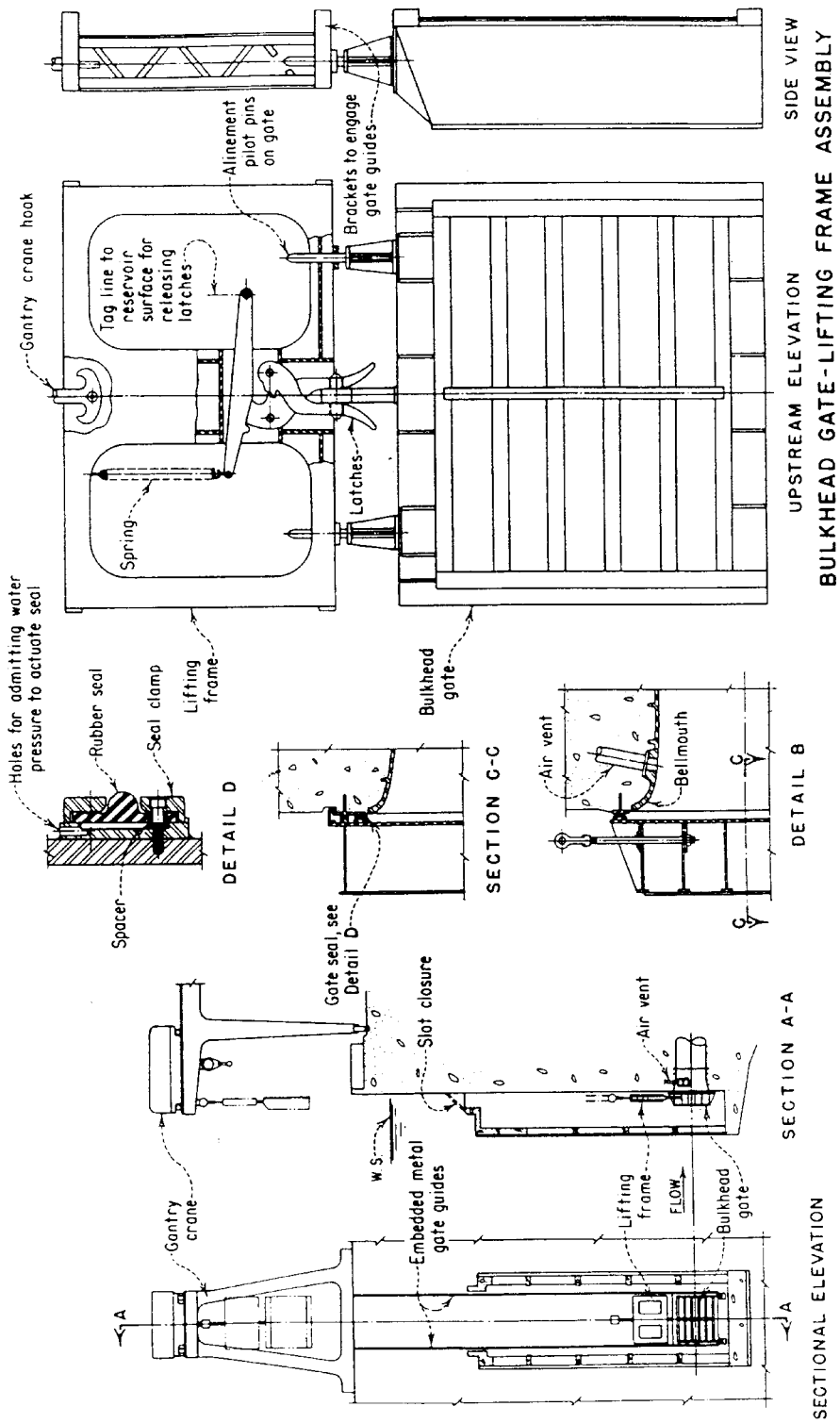

Figure 30.—Bulkhead gate.

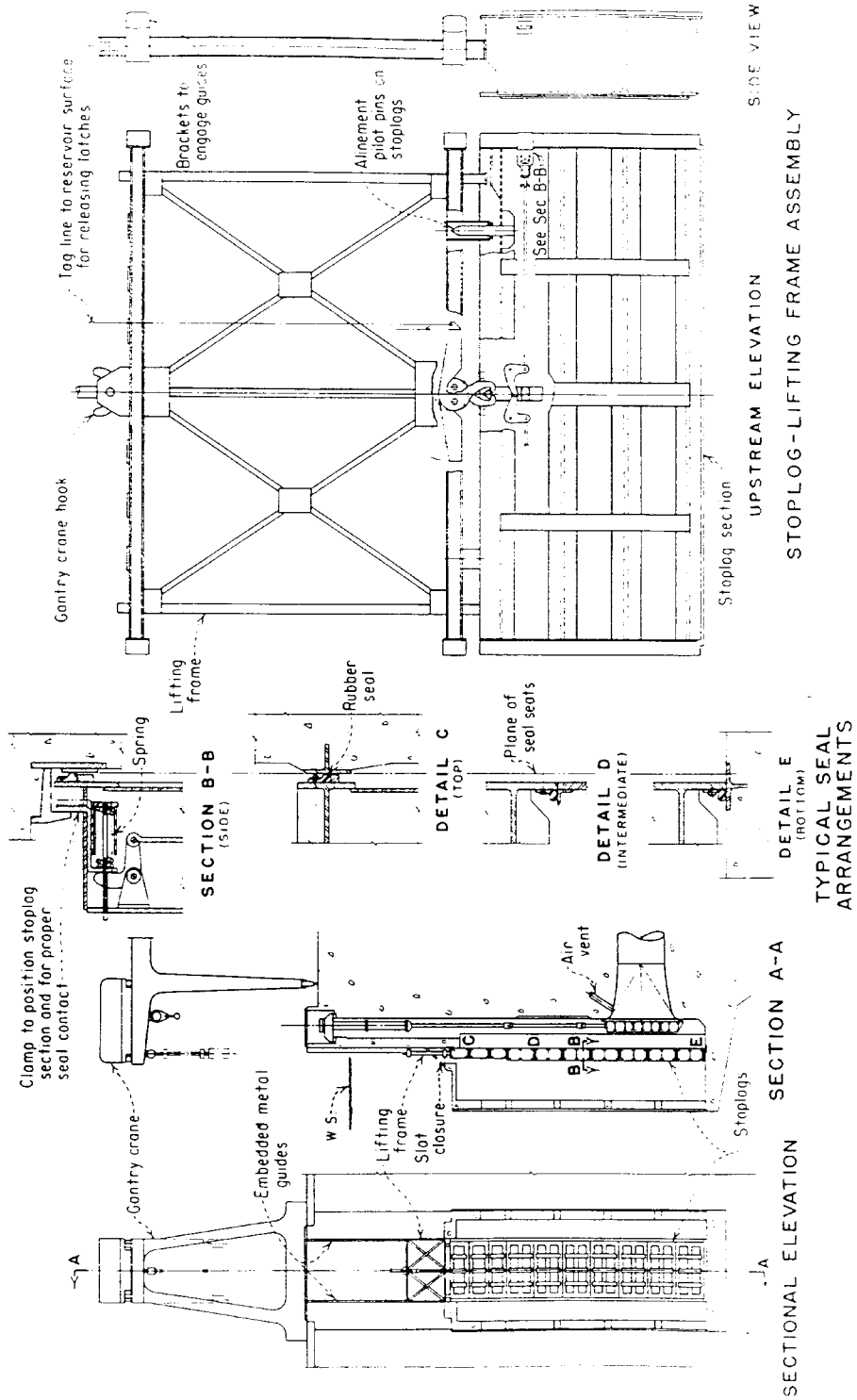

Figure 31.—Stop logs.

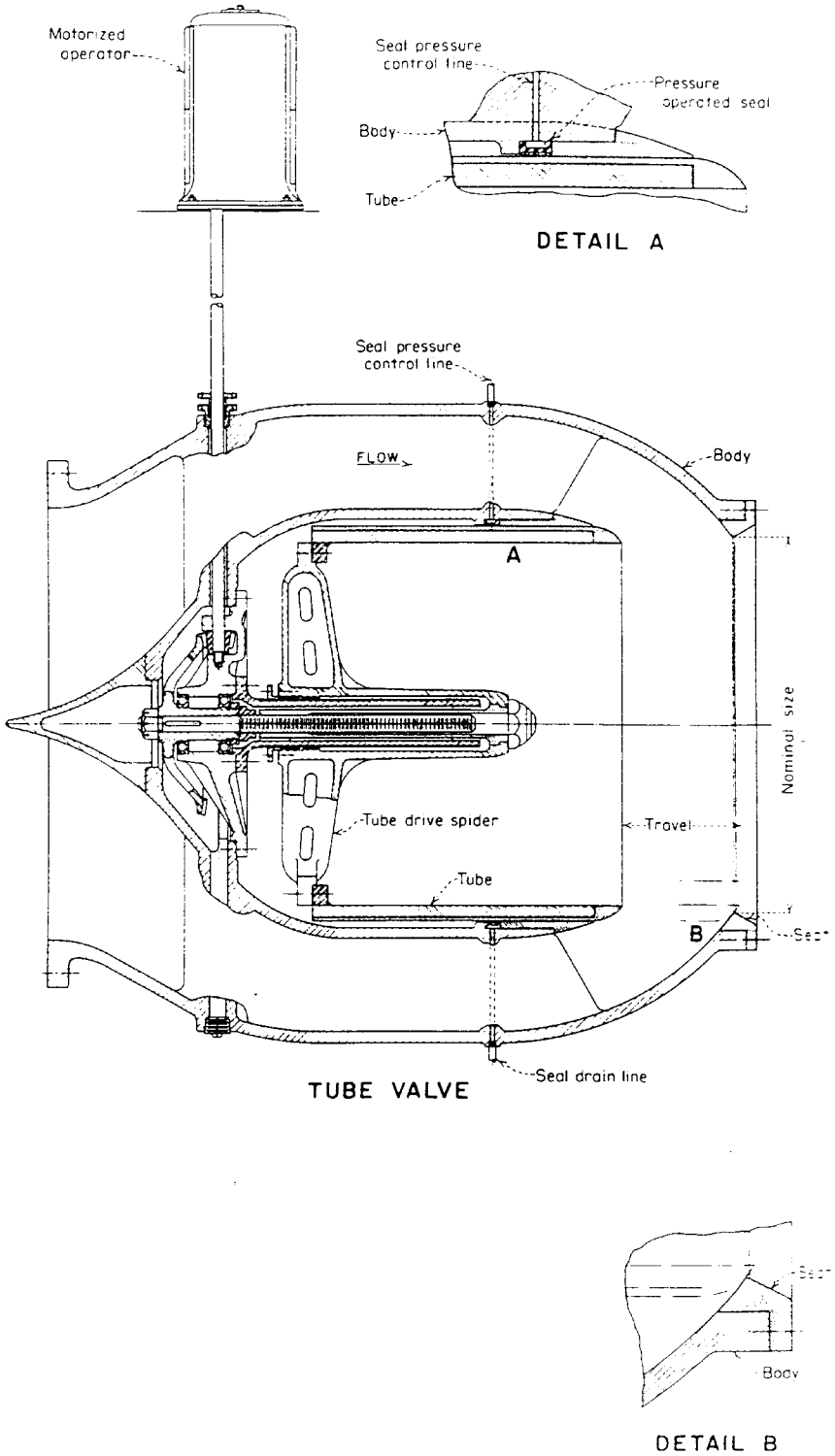

Figure 32.—Tube valve.

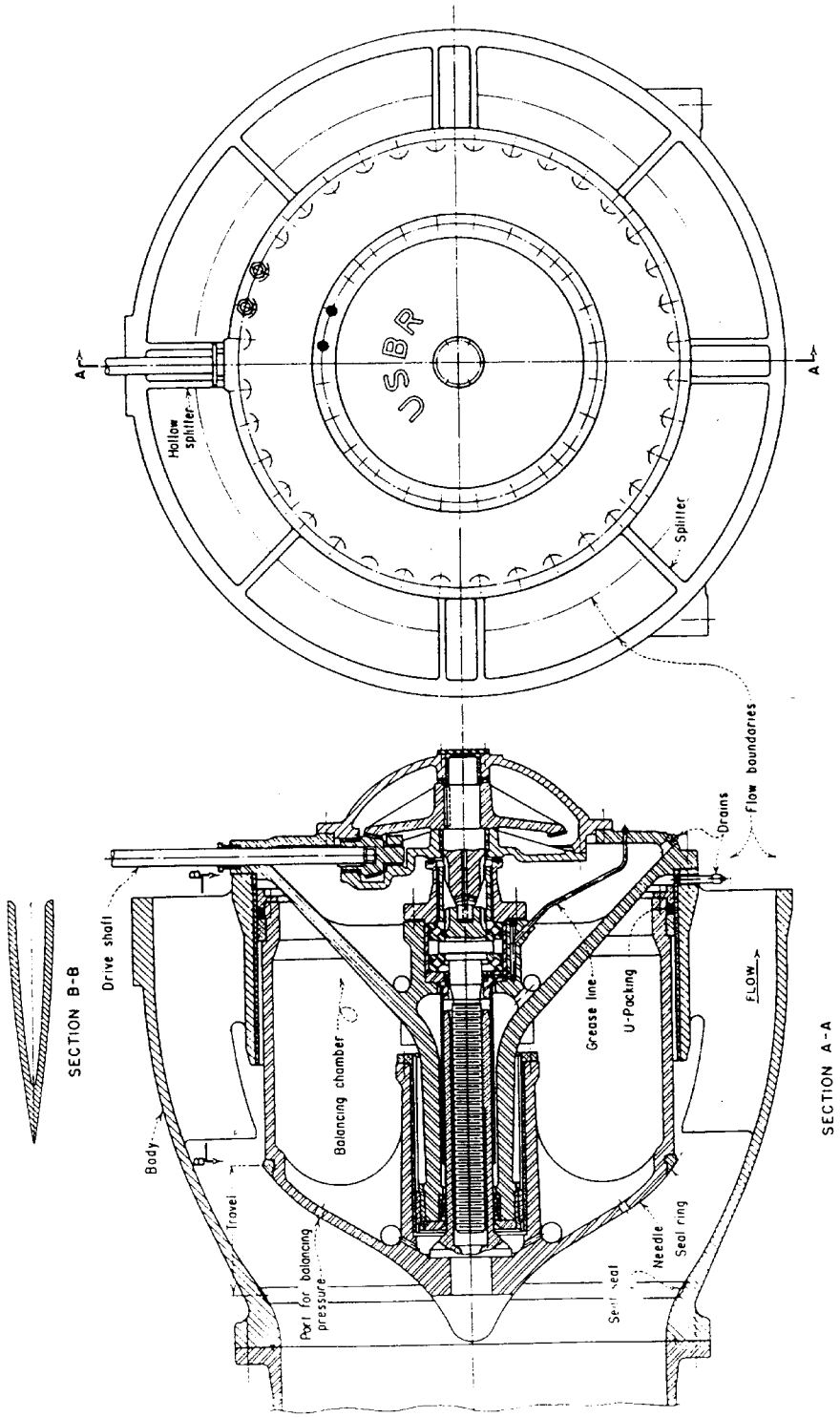

Figure 33.—Hollow-jet valve (mechanically operated).

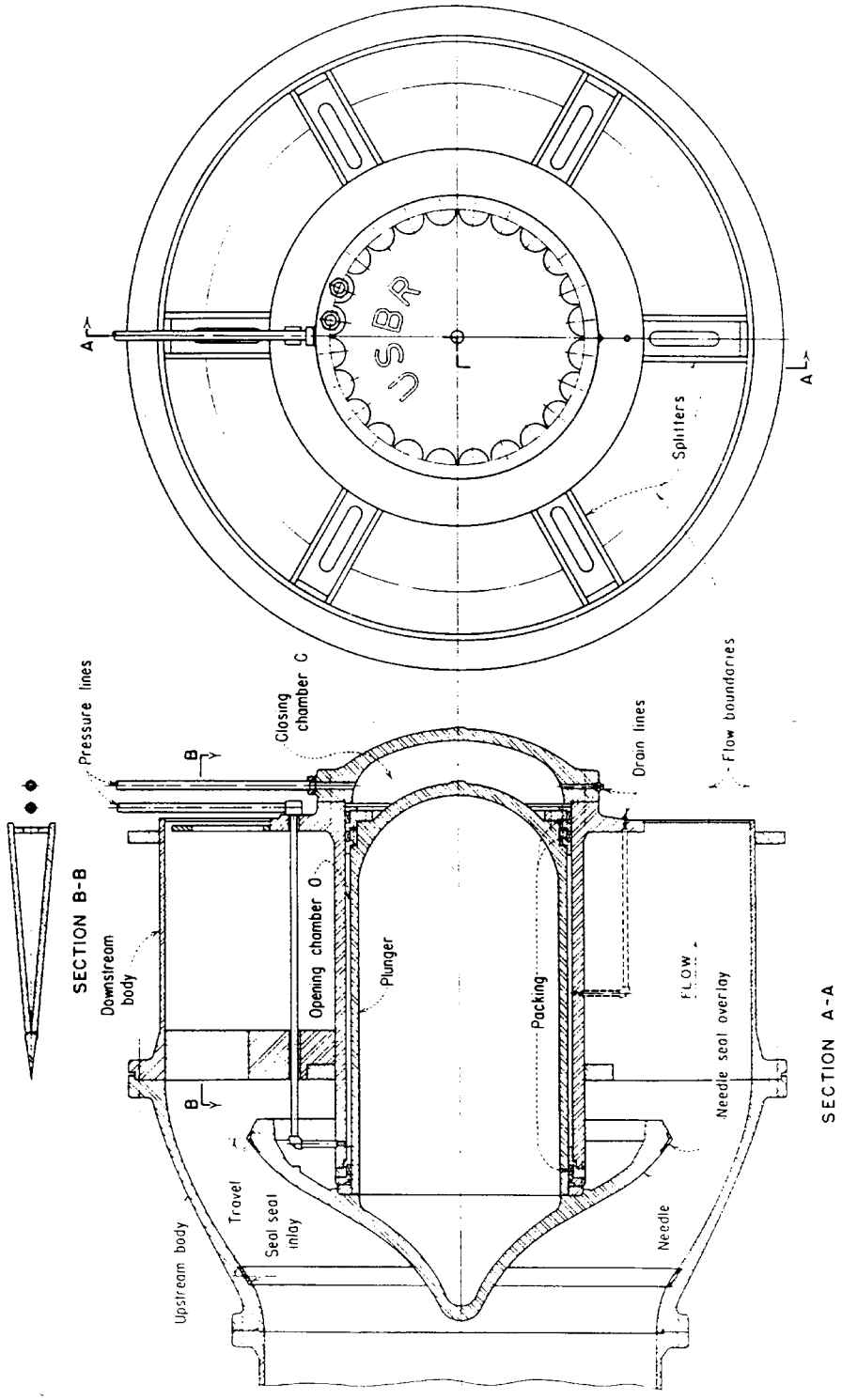

Figure 34.—Hollow-jet valve (hydraulically operated).

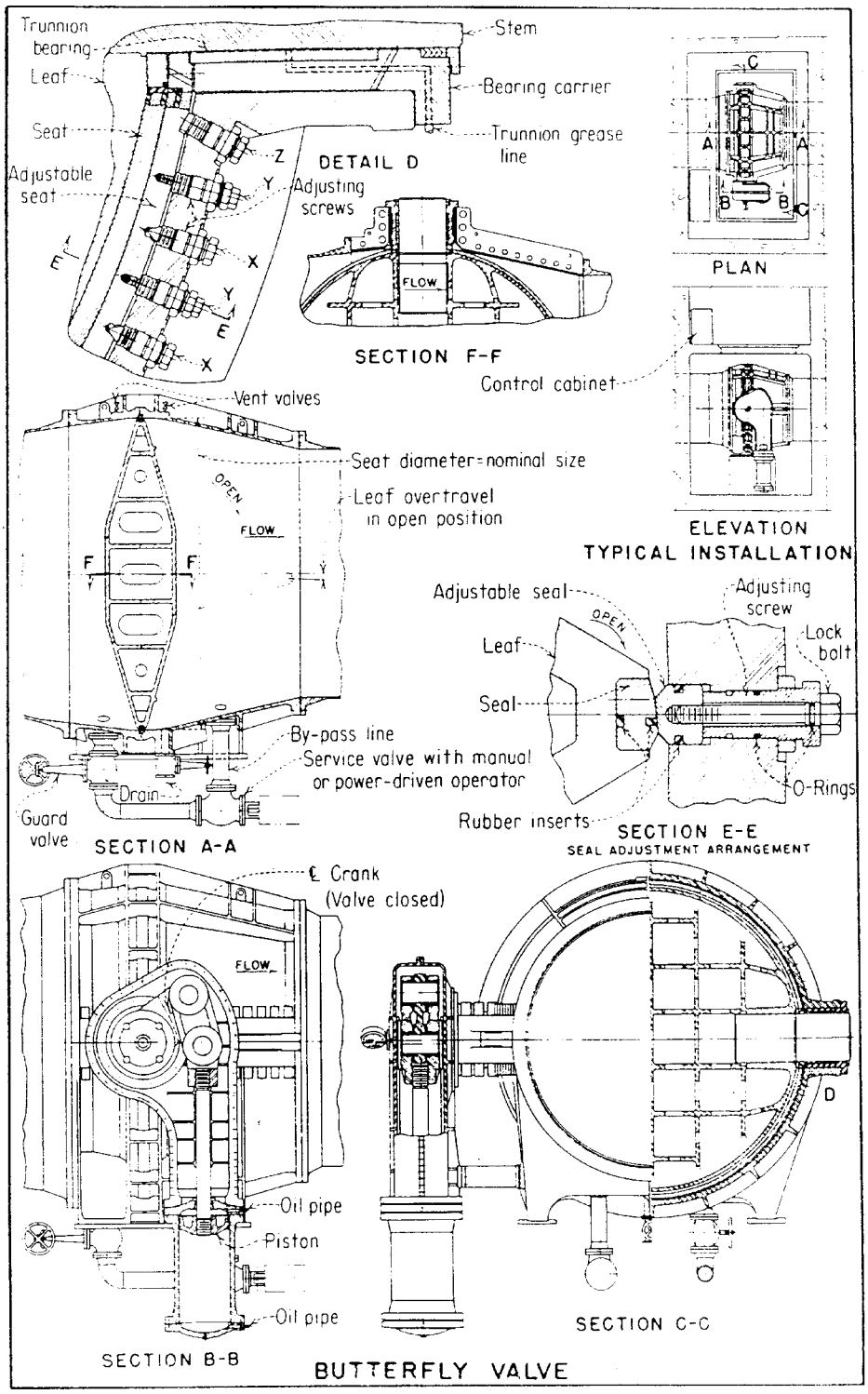

Figure 35.—Butterfly valve.

Valve and Gate Operators.

1. Threaded Stem Hoist. Basically a threaded stem type hoist consists of a steel, Acme-threaded stem mated to a bronze stem nut. Depending on the application, the stem or the stem nut may be rigidly attached to the gate. In a rising stem type gate, the nut is rotated, and the stem rises with the gate. In some cases, the stem is rotated, and the gate rises with the stem nut. In most cases, the hoist is electric motor driven through a system of gears. Ring-seal gates and some jet-flow gates use threaded stem type hoists with twin stems. Threaded stem hoists are shown in figures 36 and 37.

2. Chain and Sprocket Hoist. Chain and sprocket hoists are used to raise or lower large gates which are used infrequently. The hoists are powered by an electric motor which drives a reduction unit with two output shafts. The output shafts each drive a hoist unit with reduction gearing, drive sprocket, idler sprocket, and sprocket chain. One end of each chain is attached to the gate and the other to a counter weight. A typical chain and sprocket hoist is illustrated in figure 38.

3. Wire Rope Hoist. Wire rope hoists are most commonly used with radial gates. Wire rope hoists normally use two drums driven by an electric motor through reduction gearing similar to the chain and sprocket hoist. A wire rope hoist is shown in figure 39.

4. Hydraulic Operators. Hydraulic operators are used for a variety of gates and valves. Basically a hydraulic system consists of an oil reservoir, electric motor driven pump, directional, relief, check, flow control, and shutoff valves, filters, and the operator itself, usually a hydraulic cylinder. Many systems use two pumps in parallel to provide a backup should one fail. The operator may be driven in both directions, or it may be powered open and allowed to close by gravity. Examples of hydraulic systems are shown in figures 40 and 41, and a hydraulic cylinder is shown in figure 42.

3.3 Guard Gate and Valve Closure Tests

Closure tests of all outlet works and power penstock guard gates and valves are required periodically to verify gate and valve dependability and determine maintenance requirements. While some gates and valves can only be tested under balanced conditions, most should be given a simulated emergency closure test under maximum flow, full load conditions.

The purpose of these tests is to ensure that the gates/valves will operate as intended under severe, but controlled, conditions. If the gate/valve fails to operate as intended during these tests, the regulating gate/valve or the wicket gates are still available to stop the flow. In an actual emergency situation, such as failure of regulating gate/valve, a ruptured penstock, multiple shear pin breakage, or loss of governor control, the guard gate/valve would be the only means of stopping flow.

The gates/valves requiring simulated emergency closure tests are designed to close under full flow conditions with no damage, but it is essential that the correct test procedure be followed exactly. If there is any doubt about the validity of the test procedure or if a written procedure for a particular gate or valve is not available, contact the Hydroelectric Research and Technical Services Group, D-8450, immediately.

The emergency closure tests should be scheduled to fit into the regular maintenance schedule. The tests many times can be set up to correspond with preventive maintenance on the gate, with the gate taken out of

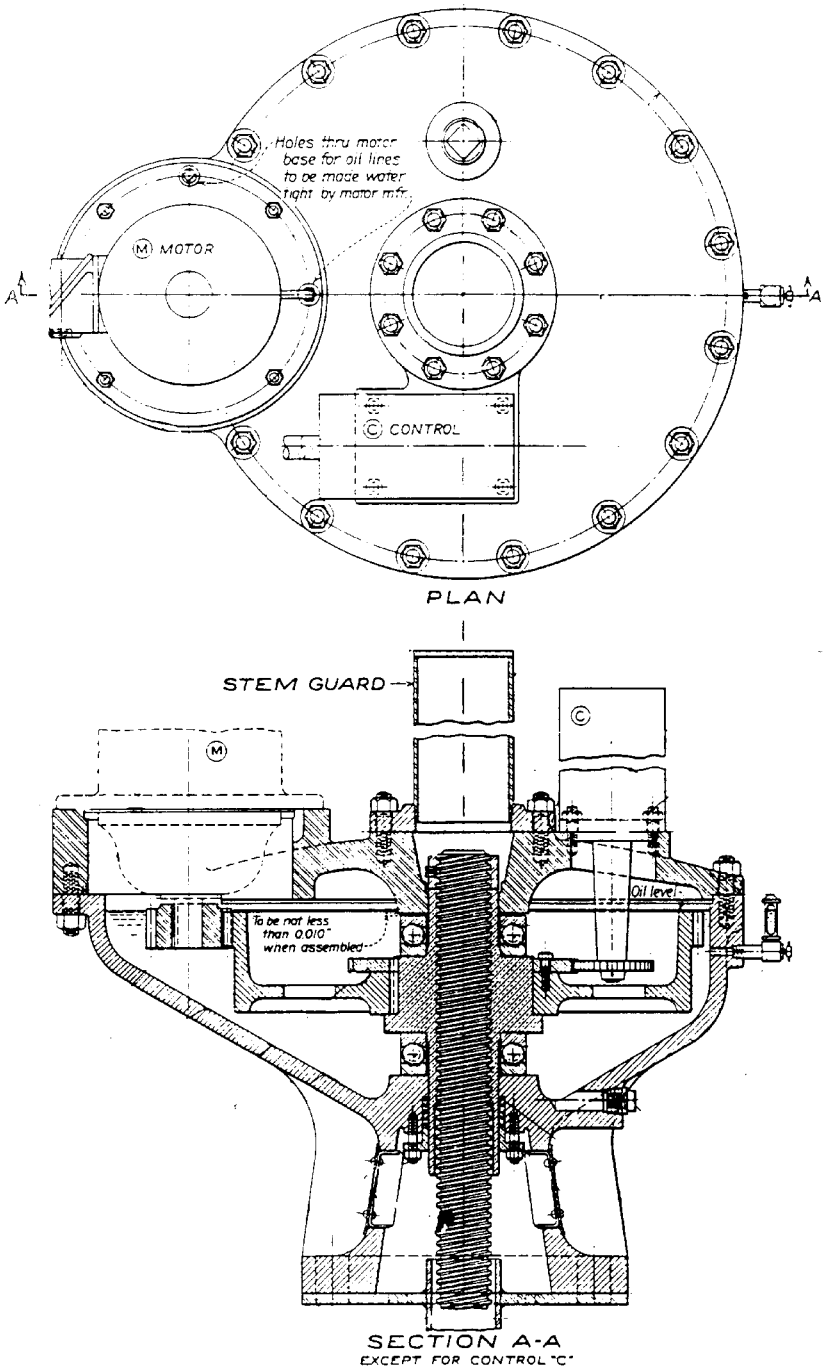

Figure 36.—Rising stem gate hoist.

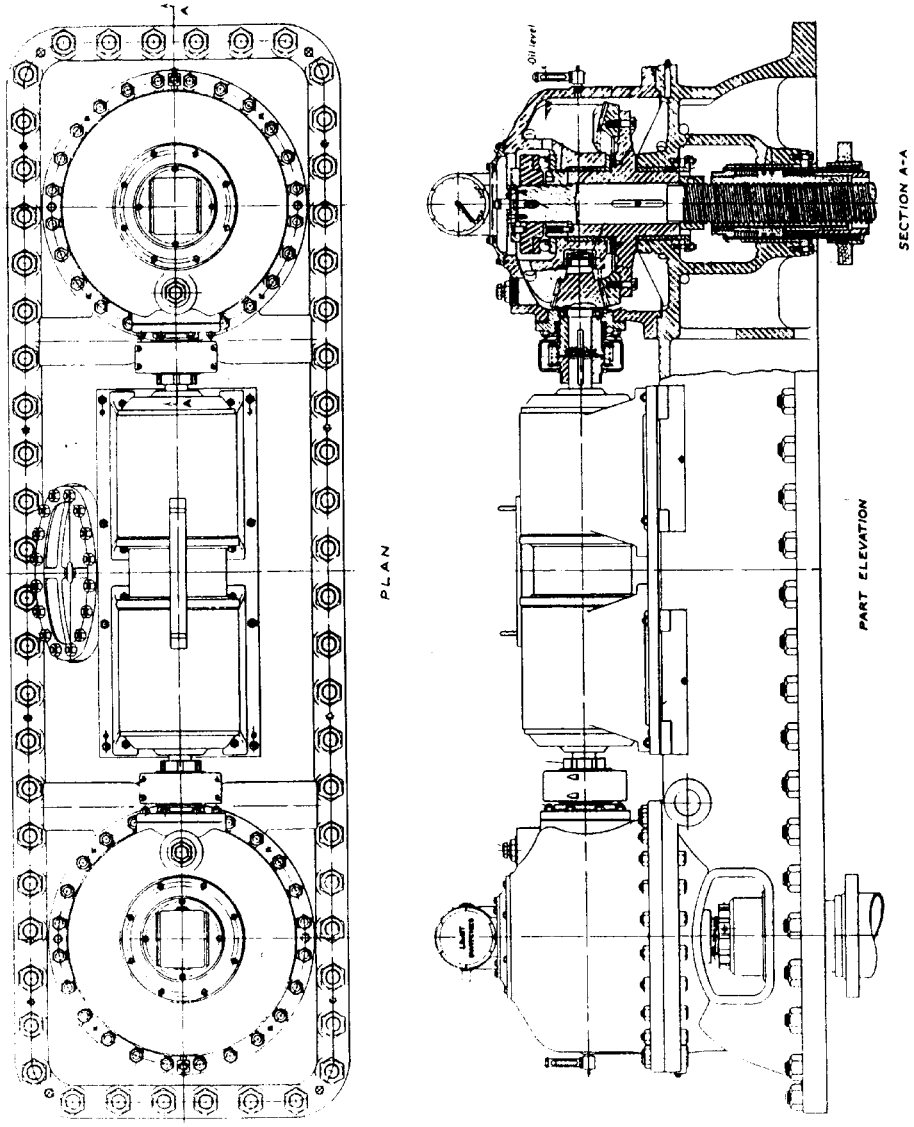

Figure 37.—Twin threaded stem gate hoist (nonrising stem).

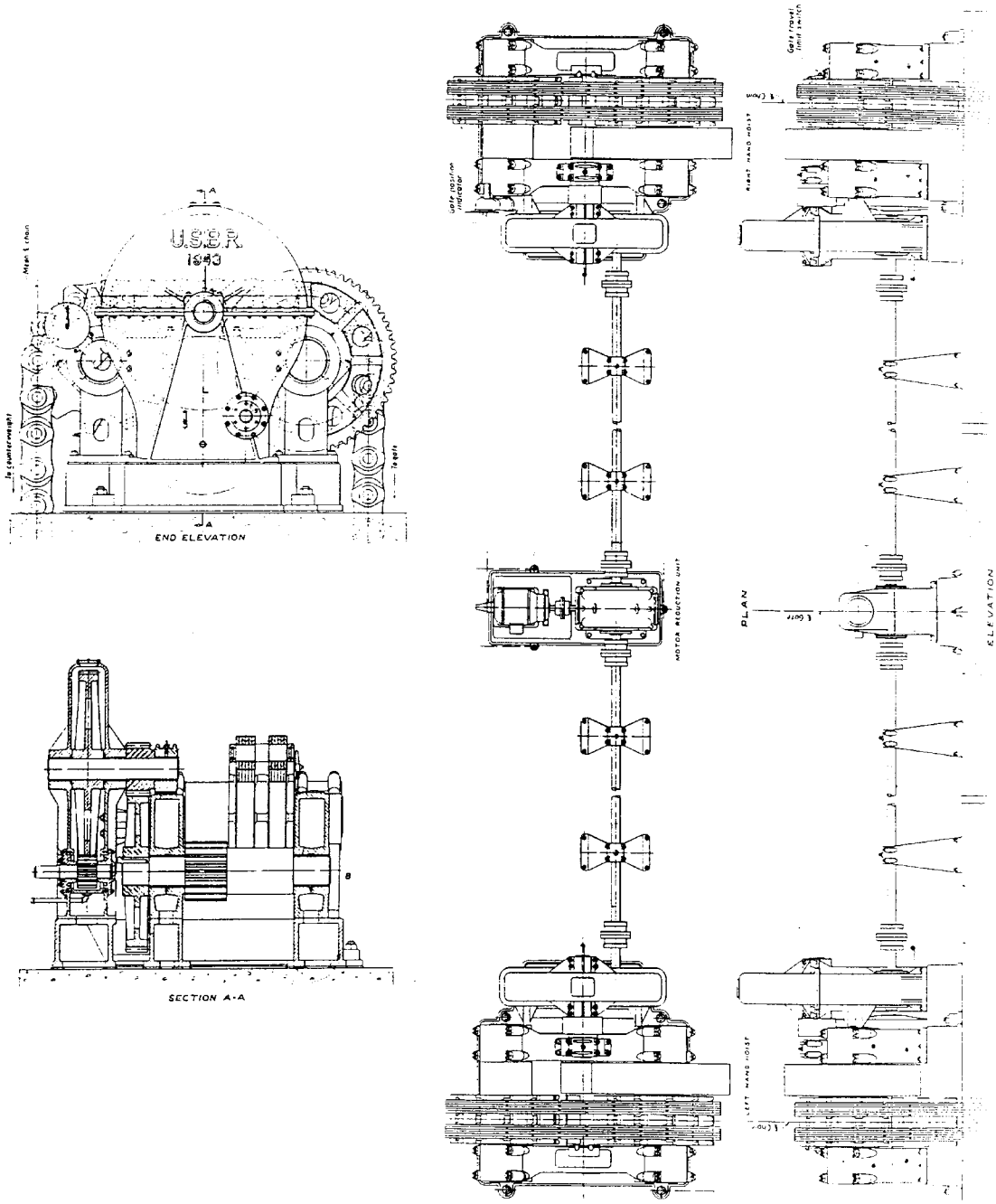

Figure 38.—Chain and sprocket hoist.

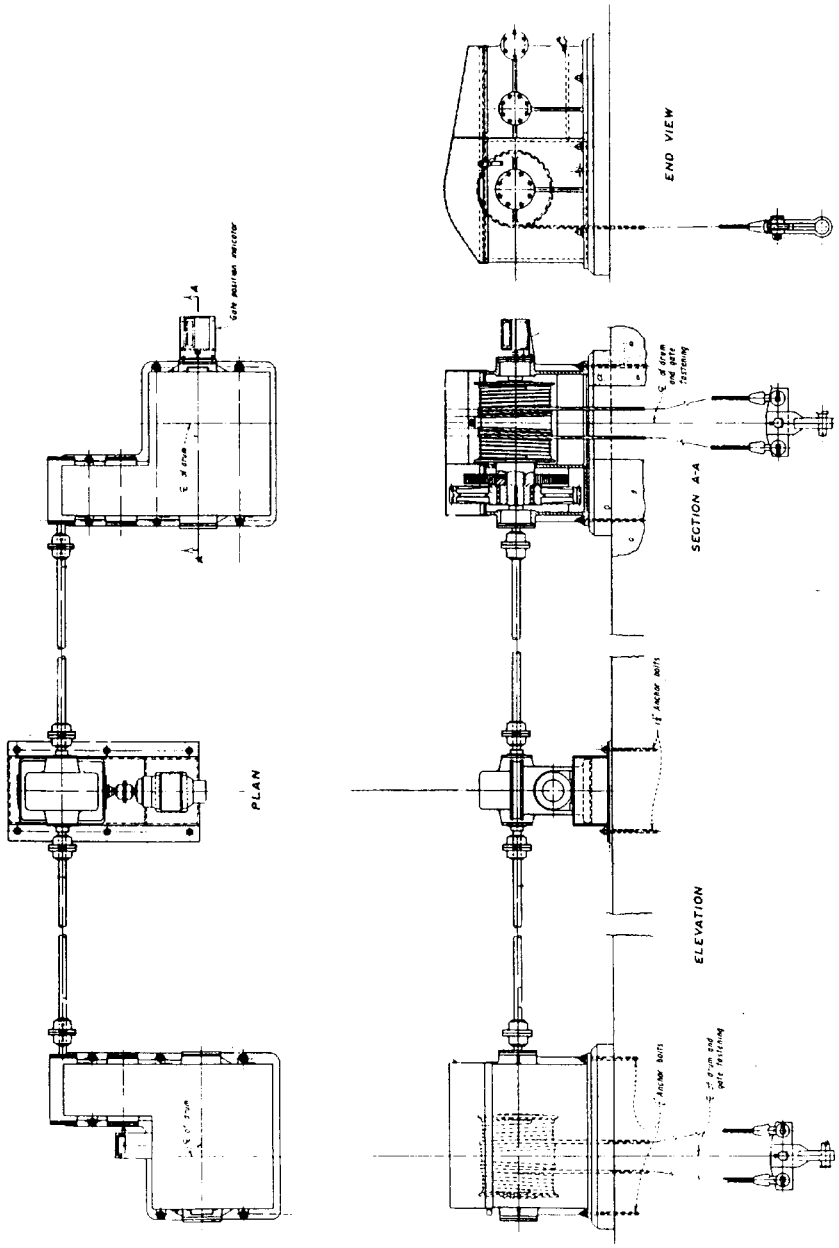

Figure 39.—Wire rope hoist.

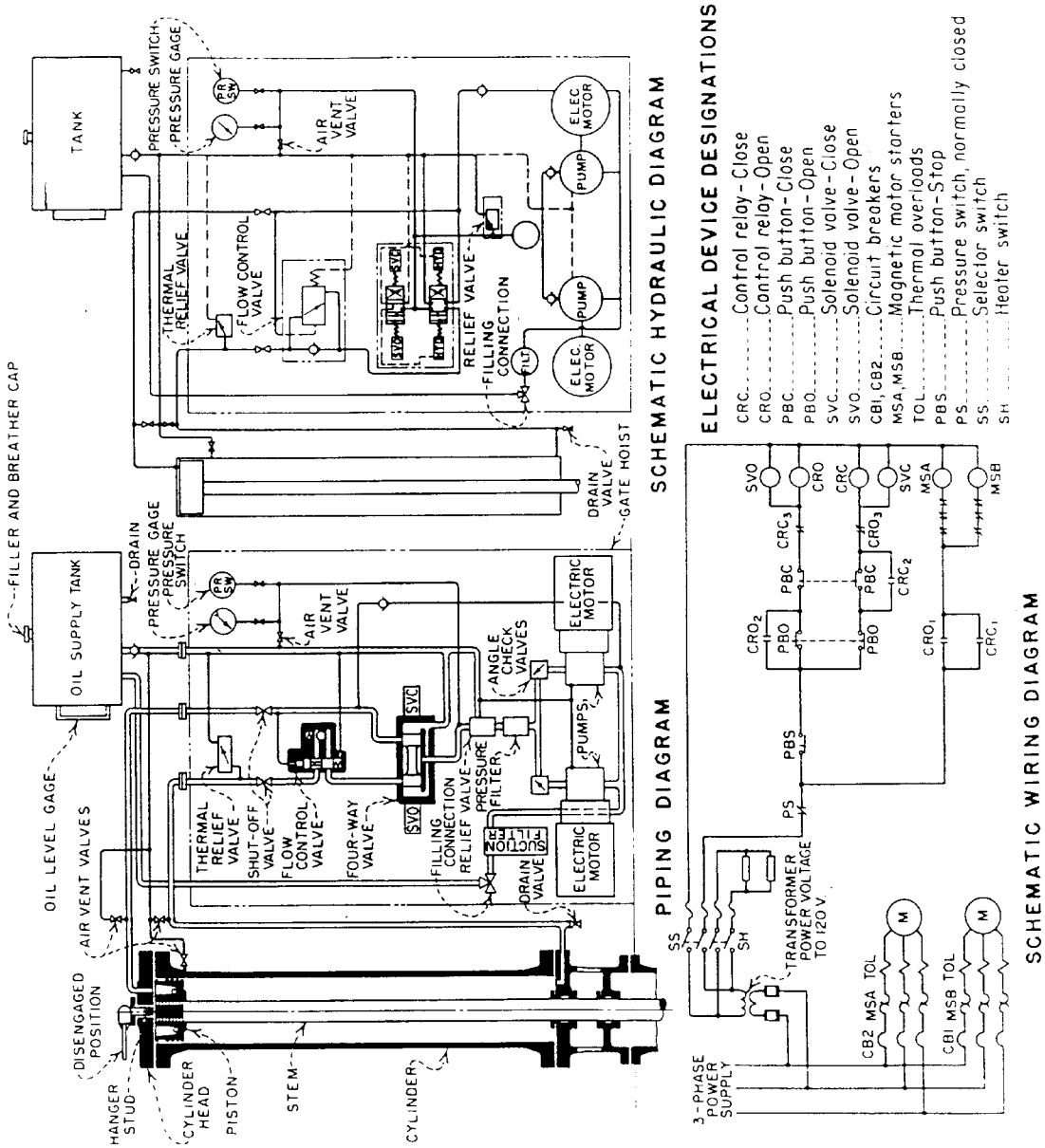

Figure 40.—Typical hydraulic hoist system.

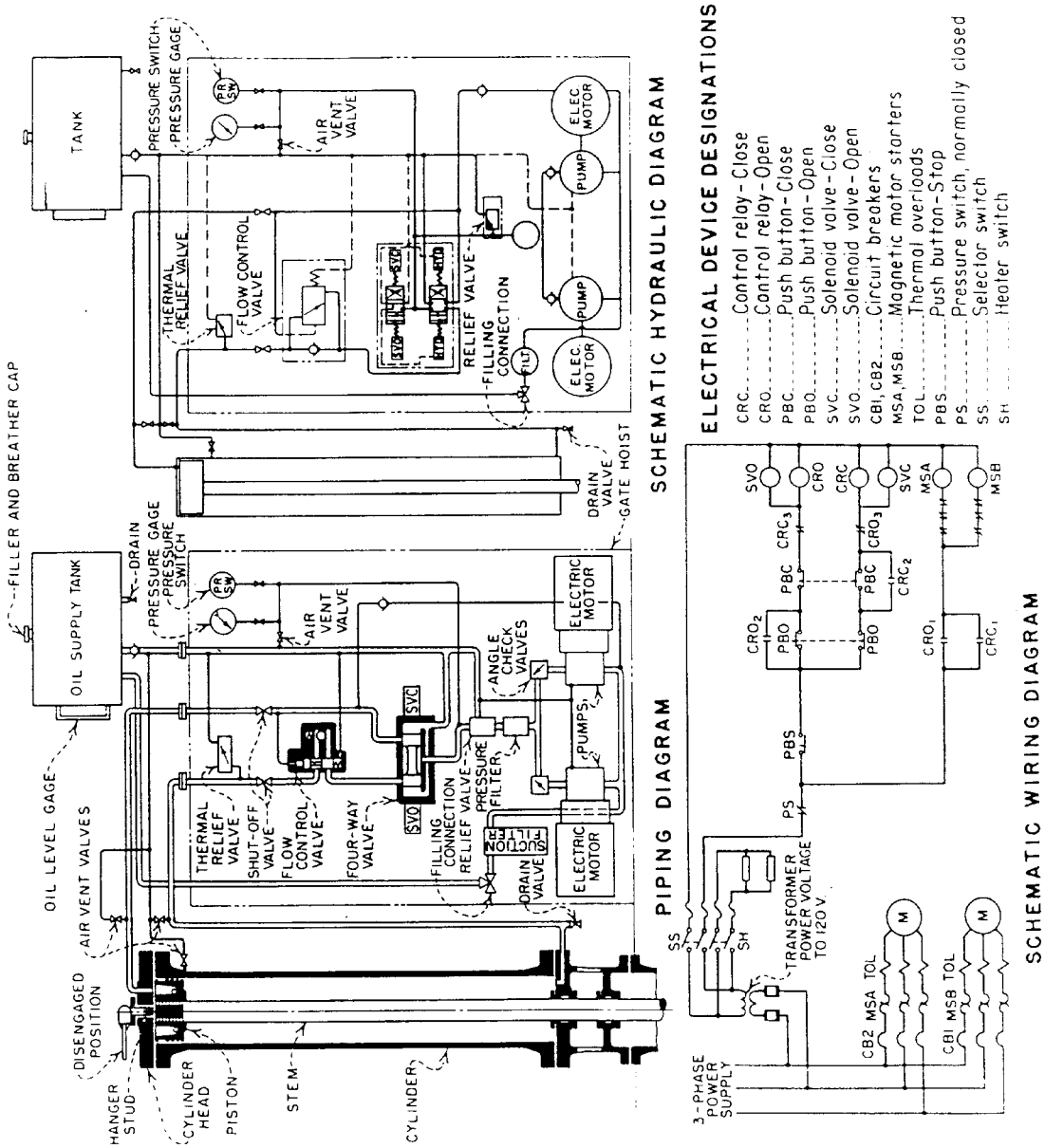

Figure 40.—Typical hydraulic hoist system.

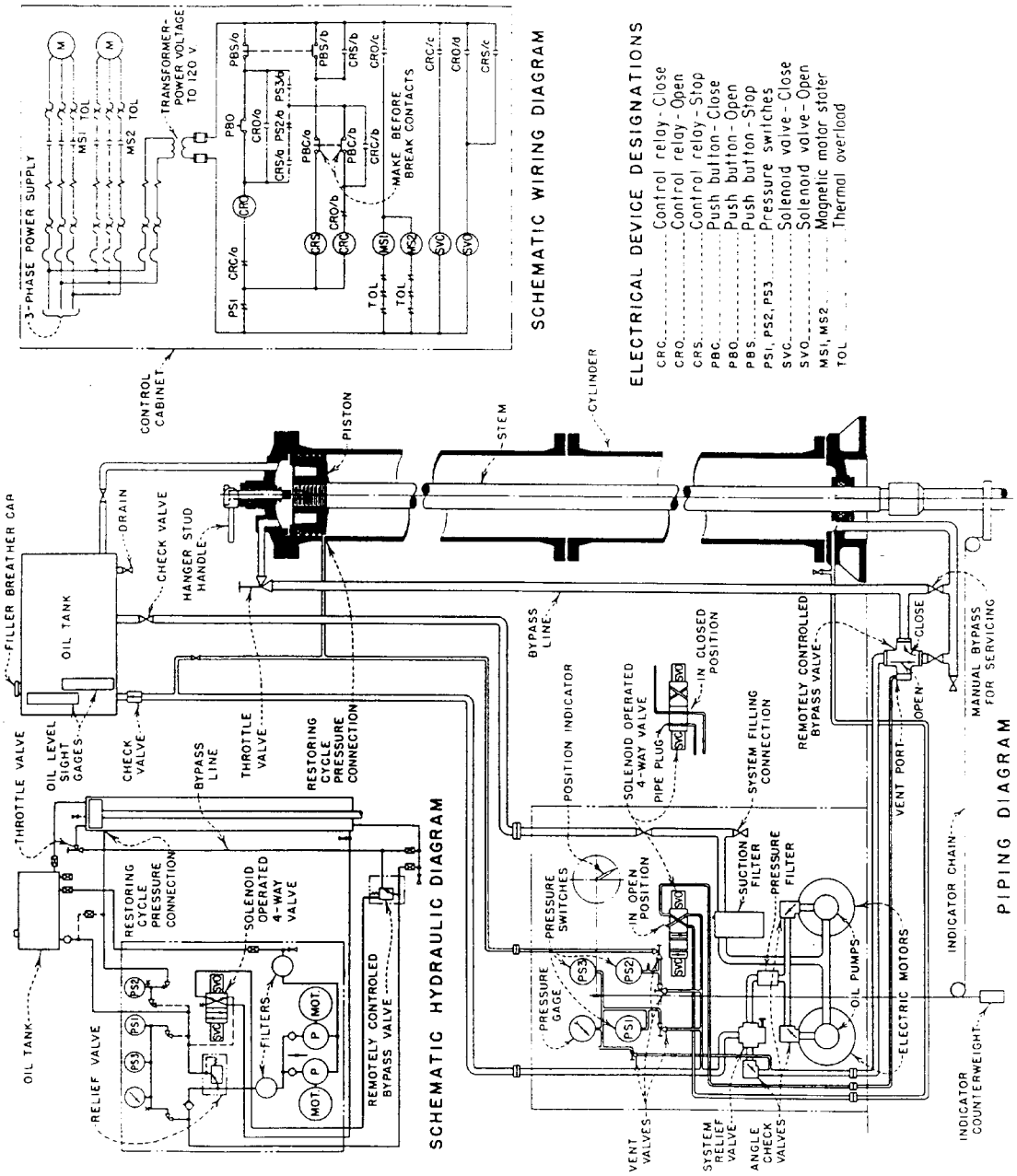

Figure 41.—Hydraulic hoist (gravity closing guard gate).

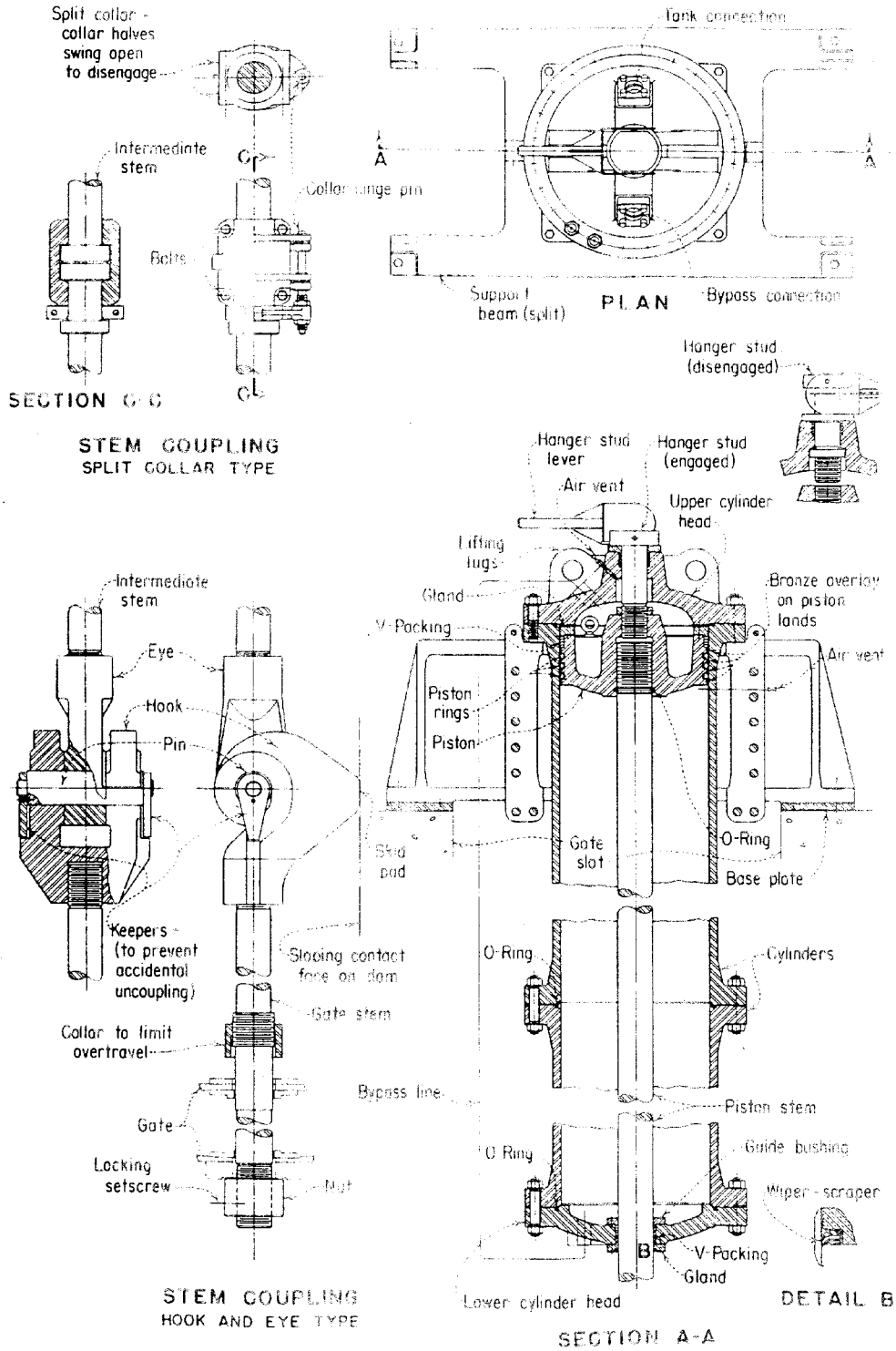

Figure 42.—Typical hydraulic hoist system.

service for maintenance immediately after the test. The schedule for these tests should be convenient, but **the scheduled interval between tests for an individual gate should not exceed 10 years.**

3.4 Auxiliary Piping Systems

Auxiliary piping systems include domestic, fire protection, and cooling water systems, hydraulic and lubricating oil systems, and service air systems. In most cases, oil systems require little maintenance other than repair of an occasional leak. Due to corrosion, most water systems do require maintenance and, eventually, replacement. The life of a water system will depend a great deal on the corrosiveness and mineral content of the water it carries.

Since determining the internal condition of water piping is very difficult, the first indication of a problem may be a leak or the failure of a valve or other component. Although a leak or valve failure may just be an isolated event, frequently it may be an indication of the condition of the entire system. By monitoring the condition of a piping system, maintenance and replacement can be scheduled, preventing an unscheduled outage. Partial disassembly of a piping system can provide a good indication of the condition of the entire system, but it may damage the piping and valves. Nondestructive tests, such as radiographs or ultrasonic tests, can be used to determine the condition of a piping system. Radiographs will not only show pipe wall thickness but also the amount of scale buildup inside the pipe.

Service air systems may also suffer corrosion damage if excessive moisture is allowed into the system. Scale and rust particles can damage pneumatic tools and cause pneumatic cylinders to stick. If moisture in air piping is a problem, a moisture separator or an air dryer should be installed.

If a piping system fails prematurely because of a corrosion problem, it may be beneficial to replace the piping with a nonmetallic material. Pipe constructed of fiberglass and polyvinyl chloride (PVC) as well as other plastics have been used successfully in corrosive environments. Before switching to one of these materials, give careful consideration to their temperature and pressure limitations. If PVC or fiberglass is used, the installation instructions should be followed carefully. Pipe hanger requirements and joining procedures are significantly different from steel pipe. Fiberglass and plastic piping should not be used in compressed air systems.

3.5 Inspection Checklist

Penstocks and Outlet Pipes	***Inspection Interval***	
1. Supports	A	NS
2.Expansion joints	A	NS
3. Exterior	A	NS
4. Interior	A	NS

Gates and Valves

Abbreviations in parenthesis refer to the types of gates or valves a particular inspection item refers to.

FW - Fixed wheel gate
CG - Coaster gate
RS - Ring-seal gate
RF - Ring-follower gate
BH - Bulkhead gates or stop logs
DG - Drum gate
JF - Jet flow gate
SG - Slide gate
CY - Cylinder gate
RG - Radial gate
BV - Butterfly valve
HJ - Hollow jet valve
TV - Tube valve

5. General inspection (FW, CG, RS, RF, BH, DG, JF, SG, CY, RG, BV, HJ, TV)	A	*NS*
6. Seals and seal seats (FW, CG, RS, RF, BH, DG JF, SG, CY, RG, BV, HJ, TV)	A	*NS,*
7. Gate frames and tracks (FW, CG)		*NS*
8. Roller and wheel assemblies (FW, CG, RS)		*NS*
9. Pivot pins and hinges (DG, RG)		A
10. Gate frames and bonnets (RS, RF, JF, SG)	A	*NS*
11. Gate leaf, skin plates, and structural members BV) (FW, CG, RS, RF, BH, DG, JF, SG, CY, RG,	A	*NS*
12. Valve body (BV, HJ, TV) and valve needle or tube (HJ, TV)	A	*NS*

Gate and Valve Operators and Hoists

13. Threaded stem hoist and mechanical operators (FW, CG, RS, RF, JF, SG, CY, HJ, TV)	A	*NS*
14. Chain hoists (FW, CG, RG)	A	*NS*
15. Wire rope hoists (FW, CG, BH, RG)	A	*NS*
16. Hydraulic hoists (FW, CG, RS, RF, JF, SG, CY, BV, HJ)	A	*NS*

Auxiliary Piping Systems	*Inspection Interval*	
Power Penstock Guard Gate and Valve Closure Tests		
17. Balanced closure tests (FW, CG, RS, RF, SG, CY, RG, BV)		A
18. Unbalanced, emergency closure tests (FW, CG, RS, RF, SG, RG, BV)		TY
19. Pipe and fittings - exterior surface		A
20. Pipe and fittings - interior surface		NS
21. Gate valves, globe valves, plug valves, etc.	A	*NS*
22. Check valves		*NS*
23. Pressure regulating and pressure relief valves	A	*NS*

A - Annual
NS - Not scheduled (extraordinary maintenance; usually 5-year or longer intervals)
TY - 10 years. Interval between tests not to exceed 10 years. Actual interval should be between 5 and 10 years.

Penstocks and Outlet Pipes

1. Supports

Annual. Check concrete supports for cracks, spalling, or signs of movement. Check lubrication of sliding supports and clean exposed bearing surfaces. Make sure sliding surfaces are not obstructed.

2. Expansion Joints

Annual. Check leakage past packing and tighten as necessary. Sliding surfaces should be clean of rust and scale. Clean as required.

Not Scheduled. Remove old packing, thoroughly clean packing area and sliding surfaces, and install new packing.

3. Exterior

Annual. Inspect surface for deterioration of paint and for corrosion, paying particular attention to rivets, bolts, and welds. Prepare corroded or deteriorated surfaces by sandblasting or other acceptable means and repaint. Steel pipe, where it emerges from concrete, is subject to galvanic corrosion. These areas should be repaired by thoroughly cleaning, sandblasting, and painting with a zinc rich primer. Look for leakage from gasketed joints such as mandoors or at drain or fill lines.

4. Interior

Annual. Inspect surface for paint deterioration, corrosion, and cavitation damage, paying particular attention to rivet heads and welded and bolted joints. Check condition of tie rods and supports at bifurcations. Prepare corroded or deteriorated surfaces by sandblasting or other acceptable means and repaint with an appropriate paint.

Not Scheduled. Sandblast and paint entire interior surface when condition of paint has reached the point that spot repairs are no longer adequate.

Gates and Valves

5. General Inspection (FW, CG, RS, RF, BH, DG, JF, SG, CY, RG, BV, HJ, TV)

Annual. Inspect exposed and accessible components for corrosion, deterioration of paint, or any other damage. Unwater penstock or water conduit and inspect downstream portion of gate or valve. Where guard gates are available, inspect upstream portion as well. If possible, operate gate through it full range of travel.

Not Scheduled. Install stop logs or bulkhead gates to inspect portions of gates or valves normally inaccessible. Remove or disassemble gate or valve as necessary to replace or renew seals or guides, to sandblast and repaint, or to repair any other damage.

6. Seals and Seal Seats (FW, CG, RS, RF, BH, DG, JF, SG, CY, RG, BV, HJ, TV)

Annual. Check for excessive leakage. Adjust seals or schedule maintenance as required. Leakage, especially through high pressure gates or valves, can cause further damage if not corrected. Where accessible, check rubber seals for cracking or other signs of deterioration and bronze seals for wear, cavitation erosion, or galling.

Not Scheduled. Unwater as required and check for damaged or missing seals, seal retainers, and bolts. Check that water actuated seals are free to move and that water lines and ports are clear. Check seal seats, wallplates, gate sills, and adjacent concrete for wear or other damage. Look for signs of misalignment such as uneven wear on the seals or seal seats.

7. Gate Frames and Tracks (FW, CG)

Not Scheduled. A thorough inspection of the tracks and gate frames in most cases will require the installation of either bulkhead gates, stop logs, the use of divers, or a remote controlled underwater vehicle. The tracks for the rollers or wheels should be checked for deformation, corrosion, and missing clamps or bolts. The gate frame should be checked for deformation, corrosion, and cavitation damage and for any missing bolts.

8. Roller and Wheel Assemblies (FW, CG, RS)

Not Scheduled. Removal or disassembly of the gate is usually required for inspection of roller and wheel assemblies. Roller assemblies should be checked for any damaged rollers, pins, or links. Rollers and wheels should be checked for free movement and for flat spots or other indications that the rollers or wheels have been sliding and not rolling. Antifriction bearings (roller or ball bearings) should be checked for free rotation, adequate lubrication, corrosion, and replaced as necessary. Bronze bushings should be checked for scoring or adequate lubrication. Bearing seals should be replaced if there is any sign of damage. The bearing journal should be checked for scoring, corrosion, or any other damage. The bearing journal of self-lubricated bushings can sometimes corrode due to a electrolytic reaction from the graphite in the bushing. If this is noted, the bushings should be replaced with a nongraphite, self-lubricated bushing or a plain bronze bushing with some type of lubrication system.

9. Pivot Pins and Hinges (DG, RG)

Annual. Check general condition of pivot pin or hinge, looking for bent or damaged parts. Check that pivot pins are properly lubricated. Inspect concrete adjacent to anchors or pivot pins for cracking or spalling.

10.Gate Frames and Bonnet (RS, RF, JF, SG)

Annual. If accessible, inspect interior of fluidway, checking for any cavitation erosion, corrosion, or other damage. Check bonnet cover for cracks or leaky gaskets. Check for excessive leakage past gate stem and position indicator rod packing and tighten as required. If equipped with a lower bonnet drain, flush silt from bottom of bonnet.

Not Scheduled. Disassemble gate and inspect for any cracks, corrosion, cavitation erosion, or any other damage. Sandblast or clean by acceptable method and paint interior of bonnet as necessary.

11. Gate Leaf, Skin Plates, and Structural Members (FW, CG, RS, RF, BH, DG, JF, SG, CY, RG, BV)

Annual. Accessible portions should be checked for corrosion, cavitation erosion, missing or damaged bolts or rivets, or any other damage. Check flexible drain hoses of drum gates to ensure they are clear and unplugged.

Not Scheduled. Disassemble gate or install bulkhead gates and unwater to allow inspection of entire gate or gate leaf. Check bottom of the gate leaf or gate for cavitation erosion. Sandblast or clean by acceptable method and paint as necessary. Check structural members for cracked welds, missing or damaged bolts or rivets, or any other damage. On drum gates and some radial gates, check interior of gate for leaks, plugged drain holes, and general condition. Drum gate flexible drain hoses should be cleaned with a rotary drain cleaner.

12. Valve Body (BV, HJ, TV) and Valve Needle or Tube (HJ, TV)

Annual. Exterior of valve should be checked for leakage, cracks, and corrosion. If accessible, interior of valve should be checked for corrosion, cavitation erosion, scale buildup that may interfere with valve movement or sealing, and any other damage. Check lubrication to bearings and oil level of gear boxes.

Not Scheduled. Unwater water conduit or penstock or disassemble valve to allow inspection of all valve components. Check for parts damaged by cavitation erosion or corrosion. Check water and oil seals and replace as necessary. Polished surfaces of hydraulically operated hollow jet valves should be checked for any damage and built up by welding or other process, remachined, and repolished if necessary. Check bearings and bronze seal rings for wear or other damage and replace if necessary.

Gate and Valve Operators and Hoists.

13.Threaded Stem Hoist and Mechanical Operators (FW, CG, RS, RF, JF, SG, CY, HJ, TV)

Annual. Inspect gear cases for leaks or other damage. Check motor coupling for misalignment. Check oil in gear boxes for water contamination and for proper level. Check grease coated gears, stems, and stem nuts for dirt or dust contamination of grease. Check gears, stem, and stem nut for wear, galling, or other damage. Grease bearings or other components equipped with grease fittings being careful not to over grease and damage grease seals. During operational test, check for unusual or excessive vibration or noise.

Not Scheduled. Drain gear boxes and refill with new oil. Grease coated gears and stems should be cleaned and recoated with new grease. Disassemble as required to check condition of gears, bearings, or other components normally inaccessible.

14. Chain Hoists (FW, CG, RG)

Annual. Inspect chain for corrosion and deformed chain links or pins. Check sprocket for damaged teeth. Apply appropriate lubricant to chain. Check oil in gear boxes for water contamination and for proper level. Check condition of grease for dirt or dust contamination on grease coated gears. Grease sheave, drum, and gear shaft bearings equipped with grease fittings being careful not to overgrease and damage grease seals. Check gears for uneven wear, galling, or signs of misalignment. Check brake shoes and brake drums for signs of overheating or other damage.

Not Scheduled. Drain gear boxes and refill with new oil. Grease coated gears should be cleaned and recoated with new grease. Disassemble as required to check condition of gears, bearings, or other components normally inaccessible.

15. Wire Rope Hoists (FW, CG, BH, RG)

Annual. Inspect wire rope for broken wires, worn or abraded wires, corrosion, and crushed or flattened strands. See Section 6, Cranes, Hoists, and Rigging Equipment for replacement requirements. Inspect rope drum and sheaves for wear and spooling characteristics of the drum. If possible, apply lubricant to entire length of wire rope. Check oil in gear boxes for water contamination and for proper level. Grease sheave,

drum, and gear shaft bearings equipped with grease fittings. Check gears for uneven wear, galling, or signs of misalignment. Check condition of brake shoes and brake drums for signs of overheating or other damage.

Not Scheduled. Drain gear boxes and refill with new oil. Grease coated gears should be cleaned and recoated with new grease.

16.Hydraulic Hoists (FW, CG, RS, RF, JF, SG, CY, BV, HJ)

Annual. Check entire hydraulic system for leaks, including piping, valves, and packing. Drain accumulations of water and sediment from oil reservoir and lower end of hydraulic cylinders. Prior to scheduled maintenance, take oil sample after operating system for sufficient time to allow the oil and any contaminants to mix. Oil sample should be checked for water content, viscosity, acidity, and solid contaminants. Based on results of oil tests, drain system, filter oil, and clean oil reservoir with lint free rags. Add oil to system if necessary to bring oil to proper level, making sure oil added is exactly the same type and viscosity as the oil in the system. Clean or replace oil filters. Calibrate pressure gauges and pressure switches. Check setting and operation of pressure relief valves. Operate gate or valve through a complete openclose cycle under balanced conditions, checking the opening or closing times and noting any unusual or excessive noise or vibration. If there is a significant increase in either the opening or closing time, determine the reason for increase. Check surface condition of piston stem for rusting, scoring, or other conditions that could impair operation or cause leakage. Check position indicators to ensure wire rope and sheaves or chains and sprockets move freely.

Not Scheduled. Remove cylinder head and inspect cylinder wall looking for signs of corrosion pitting or scoring. Check condition of stems and stem couplings, applying a coating of water proof grease to couplings normally submerged or exposed to moisture.

Guard Gate and Valve Closure Tests

17. Balanced Closure Tests (FW, CG, RS, RF, SG, CY, RG, BV)

Annual. Perform gate or valve closure test under balanced, no flow conditions following test procedure for particular gate or valve being tested. Test procedure should be for the specific gate or valve being tested and not a similar one. Contact the Hydroelectric Research and Technical Services Group, D-8450, if a procedure is not available or if there is any uncertainty about the procedure that is available.

18. Unbalanced, Emergency Closure Tests (FW, CG, RS, RF, SG, RG)

Ten Year. Perform gate or valve closure test under full flow conditions following test procedure for the gate or valve being tested. Test procedure should be for the specific gate or valve being tested and not a similar one. Contact the Hydroelectric Research and Technical Services Group, D-8450, if a procedure is not available or if there is any uncertainty about the procedure that is available.

Auxiliary Piping Systems

19. Pipe and Fittings - Exterior Surface

Annual. Visually inspect all threaded, welded, and flanged fittings checking for any leaks or corrosion. Replace or tighten fittings or pipe as required. Check pipe hangers and supports to make sure they are carrying

their share of the load and that anchors are tight. Examine paint for cracking, chalking, or other deterioration. Remove corrosion by wire brushing, sandblasting, or other acceptable method and repaint.

20. Pipe and Fittings - Interior Surface

Not Scheduled. Partially disassemble piping or utilize a nondestructive test method to determine condition of interior surfaces. Measure pipe wall thickness and compare to original thickness.

21. Gate Valves, Globe Valves, Plug Valves, etc.

Annual. Check valve stem packing for leaks and tighten packing gland as required. Operate valve through its full range of movement several times. With valve closed under pressure, listen for leakage past valve and correct as required. Lubricate valve stems, plug valve seats, and other components as required with appropriate lubricant.

Not Scheduled. Disassemble valve and inspect condition of valve body, stem, and sealing surfaces and repair as required. Completely remove old valve stem packing and install new packing.

22. Check Valves

Not Scheduled. Check for leakage past valve while under full operating pressure. Disassemble and replace or regrind valve seats as required.

23. Pressure Regulating and Pressure Relief Valves

Annual. Check operation and setting of pressure regulating and pressure relief valves.

Not Scheduled. Disassemble valves and remove any scale buildup that interferes with the operation of the valve. Reassemble and check operation and settings of valves.

IV. GOVERNORS

4.1 General

Periodic maintenance of a governor is essential for reliability and to maintain optimum performance. When preparing a maintenance schedule for a mechanical governor, consult FIST, Volume 2-3, *Mechanical Governors for Hydroelectric Units* and the governor manufacturer's literature.

4.2 Inspection Checklist

Governors	***Inspection Interval***	
1. Governor tests and adjustments		A
2. Governor ball head (woodward vibrator type)	W	A

3. Governor ball head (woodward strap suspended type)			Q	A
4. Governor ball head (pelton)				A
5. Electro-hydraulic transducer (electronic or digital governors)				A
6. Woodward oil motor vibrator				A
7. Pilot valve				A
8. Main distributing and auxiliary valves		NS	B	A
9. Miscellaneous valves				A
10. Dashpot				A
11. Linkage and pins			M	A
12. Restoring cable and position transducers				A
13. Hydraulic system	D	W	M	A
14. Generator air brake valve			B	A
15. Permanent magnet generator (PMG) or speed signal generator (SSG)			*NS*	A
16. Position and limit switches				A
17. Shutdown solenoids				A
18. Speed changer and gate limit motors and remote position indicators				A
19. Governor inspection report				A

D - Daily
W - Weekly
M - Monthly
Q - Quarterly
A - Annual
B - Biannual (Every 2 years.)
NS - Not scheduled (extraordinary maintenance; usually 5-year or longer intervals)

1. Governor Tests and Adjustments

Annual. Check wicket gate timing, speed droop calibration, speed changer adjustment, speed stability index, and governor time constant as described in FIST, volume 2-3, section IV. These tests not only optimize a governor's performance, but also can be very helpful in trouble shooting governor problems. The mechanical alignment of the governor should also be checked as described in section III in FIST, volume 2-3. It is important to recheck governor settings with these tests after any major maintenance to a governor.

2. Governor Ball Head (Woodward Vibrator Type)

Weekly. Oil ball head by applying a few drops of light machine oil to the top of the ball head motor shaft. See if a discernible motion can be felt with a finger between the main valve and base. If no motion can be felt, replace the vibrator and balls.

Annual. After shutdown, remove ball head and disassemble. Clean and inspect the slide blocks, flyball rod, and flyball rod bushings. Replace vibrators and vibrator balls if no discernible motion of the main valve was

felt before shutdown or if there is any noticeable wear on the vibrators. If sliding surfaces of slide blocks are worn, rotate both blocks to new surface. Scribe an "X" or other mark on the worn slide block surfaces so they are not reused. Check flyball rod for wear and for straightness and replace as required. Check ball bearings in ball head motor and flyball arms and replace as required. Replace flyball rod bushings if worn or scored. Cover vibrator balls with a light grease and reassemble. Do not fill vibrator cup with grease, as this can dampen the vibration. Check operation of pressure type oilers if so equipped.

3. Governor Ball Head (Woodward. Strap Suspended Type)

Quarterly. Add dashpot oil to top of ball head motor to fill internal dashpot. Do not use lubricating oil.

Annual. Observe operation of ball head and check for any unusual vibration. If any abnormal vibration is noted, disassemble ball head and check condition of thrust bearing, ball head shaft bearings, and ball head motor bearings. Follow manufacturer's alignment and reassembly procedure.

4. Governor Ball Head (Pelton)

Annual. Observe ball head and ball head motor for any unusual vibration or noise. Replace ball head motor bearings if any abnormal vibration or noise is noted. Follow manufacturers instructions for disassembly and reassembly.

5. Electro-Hydraulic Transducer (Electronic or Digital Governors)

Annual. Adjust transducer pilot valve so that it is centered with zero voltage to the transducer. Check operation for any stickiness or erratic movement.

6.Woodward Oil Motor Vibrator

Annual. Check that oil motor vibrator is providing a 0.006- to 0.007-inch oscillation of the main valve and that motor is turning in the range of 400 to 600 rpm (7 to 10 Hz). Adjust the eccentric bushing in the pivot lever to change the magnitude of oscillation. Adjust the oil flow regulator to change the motor speed.

7. Pilot Valve

Annual. Disassemble pilot valve and remove all rust spots and oil varnish with a fine grade emery cloth (320 to 500) and crocus cloth. Any nicks or scratches should be removed by stoning with a very fine flat stone. Care must be taken not to round or break the edges of the valve lands. If wear is excessive or the plunger does not move freely in the bushing, replace with a new matched plunger-bushing set.

8. Main and Auxiliary Distributing Valves

Annual. Check that main valve plunger is free. Shut off oil supply to pilot and main valves and disconnect the pressure supply to the pilot valve. With the oil pressure relieved, lift main valve plunger until it hits the opening stop nuts and drop it so it hits closing stop nuts. If the plunger drops freely, it is acceptable; but if there is any binding or if the plunger drops sluggishly, disassemble the valve to determine the problem. Check operation of transfer valve and auxiliary valve.

Biannual. Remove main and auxiliary valve plunger and remove all rust spots and oil varnish with a fine grade emery cloth (320 to 500) and crocus cloth. Any nicks or scratches should be removed by stoning with a very fine flat stone. Care must be taken not to round or break the edges of the valve lands. Check ports in valve bushings for dirt or sludge and clean as required. Check that main valve plunger is free and can fall of its own weight after reassembly.

Not Scheduled. Completely disassemble main and auxiliary valves. Remove opening, closing, and pressure plungers and remove all rust spots and oil varnish with a fine grade emery cloth (320 to 500) and crocus cloth. Check condition of main distributing valve plungers piston rings and replace as required.

9. Miscellaneous Valves

Annual. There may be other hydraulic valves in the governor such as gate limit valves and solenoid valves. These valves should be disassembled, and all rust spots and oil varnish should be removed with a fine grade emery cloth (320 to 500) and crocus cloth. Any nicks or scratches should be removed by stoning with a very fine flat stone. Care must be taken not to round or break the edges of the valve lands. Check ports in valve bushings for dirt or sludge and clean as required.

10. Dashpot

Annual. Check dashpot oil level and add oil if necessary. Do not use lubricating oil. Check operation of solenoid operated bypass. If governor tests from item 1 indicate a sticking dashpot, disassemble, inspect, and clean dashpot plungers. Before reassembly, check the setting of the small dashpot plunger. On Woodward governors, the distance from the center of the pivot pin to the top of the bonnet should be 2-7/8 inches. Turn the small plunger spring to adjust this distance. On other governors, check the manufacturer's instruction book for adjustment procedure. To refill dashpot, reassemble except for the small dashpot plunger. Tip the dashpot so that the opening for the small plunger is higher than the large plunger and fill the dashpot through the small plunger opening. Move the large plunger occasionally during filling to allow air to escape. To check for trapped air once the dashpot is filled, install the small plunger, close the dashpot needle, and operate the large plunger while holding the small plunger. The small plunger should react instantaneously to any movement of the large plunger. Any lag in small plunger movement indicates there is air in the dashpot or a leak past the needle, solenoid bypass, or the plungers. To purge the air, open the needle, hold the small plunger in place, and operate the large plunger.

To check the condition of the dashpot, close the bypass and the needle completely, push the small plunger down as far as it will go, and time how long it takes to recenter. It should take more than 50 seconds to travel 0.125 inch. A shorter time indicates excessive leakage past the needle or plungers, and the dashpot should be repaired or replaced.

After any maintenance on the dashpot, it is important to perform the governor adjustment tests of item 1 to bring governor back to optimum performance.

11. Linkage and Pins

Monthly. Lubricate links and pivot pins with a light machine oil.

Annual. Check links and pins for wear or binding. Use a new pin to check holes in links for wear and use a new link with the proper sized mating hole to check condition of pins. Replace as required. Check bearings in linkage, on shafts, and in the control panel for any roughness and replace as required. Lubricate bearings as required. Check gears for wear and proper meshing.

12. Restoring Cable and Position Transducers

Annual. Lubricate restoring cable sheaves and rod ends at servomotor connection. Check calibration of Linear Variable Differential Transformers (LVDT's) or other position transducers.

Not Scheduled. Disassemble sheaves and inspect sheaves and cable. Replace sheaves if pulley is worn or if bearings are rough.

13. Hydraulic System

Daily. Check level of oil in sump and actuator tank and add oil or charge pressure tank with air as required.

Weekly. Switch lead pump to lag and vice versa.

Monthly. Switch strainers and clean or replace filter element. If pumps are equipped with hour meters, note run time. Compare run time to previous months readings and investigate any large deviation.

Annual. - Prior to scheduled maintenance, send sample of governor oil to laboratory for analysis. If analysis shows filtration is required, drain and filter oil.

When oil is drained, clean oil sump and actuator tank with lint free rags and squeegee, inspect, and repaint as required. Check condition of float valve disk, seat, float, and float arm for any damage or wear. Check condition of float, cable, and sheaves of level switches for wear and free operation.

After system is refilled, check operation of pump unloader valve. Check operation of pressure relief valves on pumps and actuator tank. Relief valves on the actuator tank should be set to operate at 10 percent higher than the working pressure. The pump relief valves should be set to operate at a slightly lower pressure than the actuator tank relief valve. This is to prevent the pumps from continuing to fill the actuator tank should a high pressure condition in the system occur.

Check calibration and operation of pressure and level switches and reset as required. Check annunciation where applicable.

With wicket gates blocked, time pumping cycle for each pump, noting the length of time the pump is on, the rise of the oil level in the actuator tank, and the length of time between pumping cycles. Compare to previous readings. If pump is taking longer to reach operating pressure or is pumping more frequently, check for leaks in the system.

14. Generator Air Brake Valve

Annual. Check manual and solenoid operation of valve. Lubricate pivot points with light machine oil. Clean airline filter.

Biannual. Disassemble and remove all rust spots with a fine grade emery cloth (320 to 500) and crocus cloth. Lap valve seats if required.

15. Permanent Magnet Generator or Speed Signal Generator

Annual. Inspect speed switches and drive gears for wear. Lubricate pivot pins and check speed switch bearings. Check setting and operation of speed switches. Check insulation between PMG or SSG housing and the supporting frame by measuring the resistance from the housing to ground with a meggar. Replace or repair insulating gasket as required. Check voltage output of PMG.

Not Scheduled. Replace main drive bearings of PMG or SSG. If necessary, remagnetize PMG field following procedure in FIST, volume 2-3.

16. Position and Limit Switches

Annual. Check operation and settings of gate limit, speed changer position, and gate position switches. Adjust as required. Clean contacts as required. Check drive gears for wear and proper meshing. Check annunciation where applicable.

17. Shutdown Solenoids

Annual. Check operation of solenoids for binding or sticking when tripped and reset. Check settings to ensure complete shutdown solenoid closes wicket gates completely and partial shutdown solenoid brings gates to speed no load setting. Inspect solenoid for any signs of any overheating or other damage. Check condition of electrical connections and auxiliary contacts.

18. Speed Changer and Gate Limit Motors and Remote Position Indicators

Annual. Operate motors and check for excessive vibration or noise. Replace bearings as required. Check electrical connections and motor brushes. Check operation of position indicators for any sticking or binding and check correlation between transmitter and receiver. Check gears for wear and proper meshing.

19. Governor Inspection Report

Annual. An inspection report similar to figure 43 should be filled out annually to record data obtained during the annual inspection.

GOVERNOR INSPECTION REPORT

PROJECT:_____ POWERPLANT:_____ UNIT NO._____

DATE:_____ GOVERNOR MANUFACTURER:_____ SERIAL NO._____

(Refer to Facilities, Instructions, Standards, & Techniques Volume 2-3, Mechanical Governors for Hydroelectric Units for test procedures.)

Data From Governor Adjustment Program Data Sheet

Wicket Gate Travel Time, Dry = _____Seconds Compensating Crank Setting = _____

Restoring Ratio Setting = _____ Gate Time Constant, TGATE = _____Seconds

Gate Time Constant, Dashpot Bypassed, TGATE2 = _____Seconds

WICKET GATE TIMING (Scroll Case Unwatered and Governor on Main Valve)

Closing Time = (75% gate to 25% gate) X 2 = _____Seconds

Opening Time = (25% gate to 75% gate) X 2 = _____Seconds

Cushioning ---------- 10% gate to 0% gate = _____Seconds (Optimum -- 5 Seconds or More)

SPEED DROOP (With Unit On-line and Speed Droop Set at 5)

Gate position with speed changer at +1 = _____% = GP1

Gate position with speed changer at +2 = _____% = GP2

Speed Droop = 100 X (1/(GP2 - GP1)) = _____ (Optimum -- 4.5 to 5.5)

OFF-LINE TESTS

Speed Stability Index (SSI) = _____% (Optimum SSI ≈ 0.3 %)

Governor stability suitable for synchronizing? Yes No

If no, determine problem and make necessary adjustments or repairs.

Time required to synchronize? (Automatic Synchronizer) _____Minutes _____Seconds

ON-LINE TESTS

As Left Gate Time Constant, TGate = _____Seconds

As Left Gate Time Constant, Dashpot Bypass Energized, TGate2 = _____Seconds

MAIN VALVE DITHER

Vibrator Type Ball Heads

Is there discernible motion of the main valve? Yes No

If no, replace vibrator disks.

Oil Motor Vibrators

Magnitude of main valve dither. _____Inches (Optimum - 0.006 to 0.009 Inches)

Frequency of main valve dither. _____Hertz (Optimum - 7 to 10 Hertz)

PUMPING CYCLE

Pump 1 (Pump 1 Lead, Pump 2 Lag)

Pressure Pump Turns On_____PSI Pressure Pump Turns Off_____PSI

Length of Time Pump On_____Seconds Rise in Actuator Tank Level_____Inches

Time between pumping cycles_____Minutes

Pump 2 (Pump 2 Lead, Pump 1 Lag)

Pressure Pump Turns On_____PSI Pressure Pump Turns Off_____PSI

Length of Time Pump On_____Seconds Rise in Actuator Tank Level_____Inches

Time between pumping cycles_____Minutes

SHUTDOWN SOLENOIDS

Does complete shutdown solenoid completely close wicket gates? Yes No

Does partial shutdown solenoid bring unit to speed-no-load? Yes No

If No, readjust solenoid.

Figure 43a.—Governor inspection report (sheet 1 of 2).

GENERAL INSPECTION

Indicate condition of equipment, maintenance performed, and date inspected, or if not checked during this inspection, indicate condition and date when equipment was last serviced.

Condition and Maintenance Performed	Date Last Inspected
Governor Oil	
Laboratory Tests	
Filtered	
Sump	
Actuator Tank	
Actuator Tank Relief Valve	
Float Valve	
Level Switches	
Strainers	
Distributing Valve	
Auxiliary Valve	
Pilot Valve	
Ball Head	
Dashpot	
Linkage	
Restoring Connections	
Governor Oil Pump	
Bearings	
Packing or Seals	
Unloader	
Pump Relief Valves	
Permanent Magnet Generator or Speed Signal Generator	
Main Drive Bearings	
Speed Switch Bearings	
Coupling	
PMG Voltage	
Speed Switch Settings	
Pressure Switches	
Position and Limit Switches	

Remarks and Recommendations:

Inspection Made By

Figure 43b.—Governor inspection report (sheet 2 of 2).

V. AIR COMPRESSORS

5.1 General

Air compressors are a common piece of equipment found in most maintenance shops. There are a number of different types of compressors available, but the two most common types are the reciprocating and the rotary screw compressors.

5.2 Reciprocating Air Compressors

Reciprocating compressors have been available for many years in a variety of sizes and configurations and make up the majority of air compressors found in plants and maintenance shops. Reciprocating compressors are efficient and relatively simple to operate and maintain. Most reciprocating compressors can be completely overhauled with a minimum of tools and parts.

A reciprocating compressor compresses air in a cylinder, against a cylinder head, by a reciprocating piston. While all reciprocating compressors operate in basically the same manner, there are many variations in their construction. For example, a reciprocating compressor can be single or multicylinder, single or double acting, single or multistage, air or water cooled, and can have a horizontal, vertical, or angled cylinder arrangement. Other variations are possible depending on the application.

Single acting compressors utilize automotive type pistons, connected directly to the crankshaft by connecting rods, and compress air on one side of the piston only. Double-acting compressors have a double-acting piston, compressing air on both sides, driven by a piston rod which extends through a packing box. The piston rod is connected to a crosshead which is connected to the crankshaft by a connecting rod. Both single and double-acting compressors are available as single or multistage. Multistage compressors develop their final pressure in steps, by connecting the discharge of the first stage, through an intercooler, to the intake of the second stage. The intercooler removes the heat of compression of the first stage.

5.3 Rotary Screw Air Compressors

A rotary screw air compressor utilizes two meshing helical shaped rotors to compress the air. As the rotors turn, air is compressed by the advancing helix. The rotor may either be oil flooded or dry. Dry rotor compressors require the use of timing gears to maintain the proper clearance between the rotors. The oil in the oil flooded type compressor lubricates and seals the rotors and acts as a coolant to remove the heat of compression. The oil flooded type does not require timing gears as the oil film prevents contact of the rotors, but an air-oil separator is necessary to remove the oil suspended in the compressed air as it leaves the compressor.

Rotary screw compressors have fewer moving parts than reciprocating compressors and provide a smooth, nearly pulse free air supply. Rotary screw compressors are usually supplied in a "package" requiring only connection to electrical power and to the air system. Since there is little vibration, they do not require the massive foundation a comparable reciprocating compressor would need. They are also very popular in trailer mounted, internal combustion engine driven portable compressors.

The construction of a rotary screw compressor is such that little maintenance can be accomplished in the field by plant personnel. The lubricating oil filtration system must be maintained regularly as the tight tolerances

make clean oil a necessity. The air end (i.e., the rotors and their housing) of the rotary screw compressor has no sacrificial components such as the piston rings of the reciprocating type. Since the air end is constructed with such high precision and tight tolerances, in most cases, the entire air end must be replaced as a unit.

5.4 Accessories

Inlet Filters. Inlet filters prevent dust and other particulates from entering the compressor. All compressors, especially rotary screw compressors, are susceptible to wear or other damage from dirt particles. A clogged filter can cause a significant loss in compressor efficiency. To prevent damage and loss of efficiency, regular cleaning of filter elements or replacement of throw away elements is required.

Aftercoolers. Aftercoolers are installed on the discharge line to lower the compressed air discharge temperature and to condense water from the air. Aftercoolers are usually installed with a separator and trap to handle the condensate.

Separators. Separators are used to remove entrained liquids from the compressed air. This is usually accomplished by changing the direction of movement of the liquid particles so that they are removed from the air either centrifugally or through impingement against a separator element. The most common types of separators are impingement, centrifugal, and cyclone types. Separators should be equipped with a trap or drain.

Traps. Traps collect liquid that has been removed from the air by separation or condensation and release it, either automatically or through a manual valve. Traps are installed with separators, filters, aftercoolers, receivers, and dryers. They should also be installed at the low points in distribution systems, especially on lines passing through a cold area. An inline strainer is usually installed directly upstream of a trap to prevent sediment or other contamination from clogging the trap.

Dryers. Dryers are used when dryer air is required than can be provided by an aftercooler system. The most common are refrigerated dryers which condense the moisture from the air by reducing the air temperature. Deliquescent type dryers absorb moisture into a deliquescent material which must be periodically replaced. Desiccant dryers use porous moisture adsorbing materials that hold the moisture in the pores until they are regenerated by electric heat, air purging, or both.

Pressure Regulating Valves. Pressure regulating valves are used to supply small volumes of air to various pneumatic equipment at a pressure lower than the system pressure.

Pressure Relief Valves. As a safety precaution, a pressure relief valve is required in every compressed air system ahead of the first point that could conceivably act as an air flow restriction. This includes shutoff valves, check valves, and even in-line filters as they could clog. Receiver tanks should also have a relief valve installed on the tank with no restrictions between the tank and the valve. If there are no restrictions in the discharge line between the compressor and the receiver tank, the relief valve mounted on the receiver tank is sufficient to protect the system. The relief valve should be set to open at no higher than 10 percent above the maximum working pressure and periodically checked for proper operation. It should be noted that pressure regulators are not acceptable for protection against excessive system pressure as they do not vent air but regulate pressure by restricting air flow.

Receiver Tanks. Receivers perform several functions in a compressed air system. The receiver dampens pulsations from reciprocating compressors, acts as a reservoir to take care of temporary demands in excess of compressor capacity, and prevents frequent loading and unloading of the compressor. The receiver may also act as a separator. Since the air is cooled and its velocity reduced, some of the moisture still in the air will condense and fall to the bottom of the receiver where it can be removed by a trap or manual valve.

5.5 Inspection Checklist

General	***Inspection Interval***		
1. Foundation		A	
2. Frame			A
3. Compressor drive	W	A	
4. Cooling system		W	A
5. Air intake and filter	W	M	
6. Piping and valves			A
7. Aftercoolers			*NS*
8. Separators			*NS*
9. Traps		W	A
10. Dryers			A
11. Pressure regulating valves			A
12. Pressure relief valves			A
13. Receiver tanks	NS	W	A
14. Gauges		W	A
15. Pressure and temperature switches		M	A
16. Unloader		M	A
17. Bearings		NS	A
18. Lubrication		W	A
19. Packing gland		NS	A
20. Crosshead		W	A
21. Cylinder			NS
22. Piston			NS
23. Connecting rod			NS
24. Intake and discharge valves			NS
Rotary Screw Compressors			
25. Air end			NS
26. Oil reservoir and separator		W	A
27. Oil filter			A

A - Annual
M - Monthly
W - Weekly
NS - Not scheduled (extraordinary maintenance; usually 5-year or longer intervals)

General

1. Foundation

Annual. Check foundation with level for settling. Examine concrete for cracks and spalling.

2. Frame.

Annual. Examine metal for corrosion and cracks. Clean and paint as required.

3. Compressor Drive

Weekly. Check V-belts for slippage, chains for looseness, and shaft couplings for excessive runout or vibration. Dress or tighten V-belts as required. Tighten and lubricate chains as required. Tighten coupling bolts and lubricate coupling as required.

Annual. Check V-belts for signs of wear or aging and replace as needed. Check chain and sprocket for wear or distortion and replace as needed. Check shaft runout of direct coupled machines with dial indicator and check shaft alignment if runout is excessive.

4. Cooling System

Weekly. Check flow of water or coolant through compressor and aftercooler. Check for accumulation of dirt and lint on cooling fins of air cooled compressors.

Annual. Flush and clean all water lines and repair any leaks. Check for corrosion and scale buildup and clean as required. Thoroughly clean cooling fins of air cooled compressors.

5. Air Intake

Weekly. Check condition of filter and intake for obstructions.

Monthly. Remove intake filter and clean or replace. Filter may require cleaning more or less frequently depending on location of the intake.

6. Piping and Valves

Annual. Clean and repaint piping as required. Repack and reseat valves as required.

7. Aftercoolers

Not Scheduled. Check for leaks and for adequate water flow. Disassemble and check for internal corrosion and scale buildup. Clean as required.

8. Separators

Not Scheduled. Check for leaks. Disassemble and check for corrosion and scale buildup. Clean as required.

9. Traps

Weekly. Operate manual drains.

Annual. Check automatic traps for leaks and proper operation. Clean strainer and check for corrosion or scale buildup.

10. Dryers

Annual. Replace dryer elements as required on deliquescent dryers. Check operation of refrigerated and desiccant types.

11. Pressure Regulating Valves

Annual. Check operation and verify that regulating valves are providing correct pressure downstream from valve.

12. Pressure Relief Valves

Annual. Verify operation and setting.

13. Receiver Tanks

Weekly. Open the receiver drain valve and blow down until water is removed from tank. Check for leaks.

Annual. If equipped with inspection door, open and clean all rust and sludge from interior of tank. Inspect interior of tank for corrosion or other damage and repaint as required. Make thorough inspection of exterior of tank paying close attention to joints, seams, and fittings.

Not Scheduled. All receiver tanks are to inspected in accordance with the Reclamation Safety and Health Standards, section 16.12. The inspection interval shall not exceed 5 years.

14. Gauges

Weekly. Check operation of gauge. Look for loose or stuck pointer. If there is any doubt about the accuracy of gauge, remove and check calibration or replace with new gauge.

Annual. Remove gauge and calibrate. Make any necessary repairs or replace with new gauge if gauge is not repairable.

15. Pressure and Temperature Switches

Monthly. See that pressure switches cut in and out at proper pressures. Check setting of temperature switches.

Annual. Check and clean switch contacts. Check switch calibration and set points. Clean and adjust moving parts.

16. Unloader

Monthly. Check that compressor is not being loaded until operating speed is reached in starting and that it unloads at the proper pressure.

Annual. Inspect valves and air lines for leaks and valves for proper seating. Lap valves if required. Examine solenoid for deteriorated insulation or loose connections.

17. Bearings

Weekly. Check antifriction bearing for excessive vibration or noise and schedule replacement as required. Check for adequate lubrication.

Not Scheduled. Disassemble compressor and inspect condition of all bushings and babbitt-lined bearings. Repair or replace as required.

Reciprocating Compressors

18. Lubrication

Weekly. Check that oil or grease cups are full and that crank case oil is at proper level. Replace or add the correct lubricant to bring to proper levels in crankcase or oil reservoir. Check oil feed rate to cylinder. Check forced oil systems for proper operation. Note any leaks and repair if excessive.

Annual. Clean oil or grease cups and piping. Check condition of lubricant and change if required. Repair any leaks.

19. Packing Gland

Weekly. Check for excessive leakage and for scoring on piston rod. Adjust packing as necessary.

Annual. Replace packing as necessary.

20. Crosshead

Weekly. If visible, check fit and lubrication.

Annual. Check bearing shoes for scoring and wear and fit to crosshead. Shim shoes if necessary to obtain proper fit. Check pin and bushing for wear and replace or refit as required.

2 1. Cylinder

Not Scheduled. Check cylinder walls for wear and scoring. Measure inside diameters at top, bottom, and middle in two directions, 90 degrees apart. If cylinder is out-of-round or oversized, rebore cylinder.

22. Piston

Not Scheduled. Check piston for wear. Check clearance with micrometer. Examine rings for tightness and fit. Replace if necessary. Check piston rod for trueness and scoring or wear. Renew or replace as required.

23. Connecting Rod

Not Scheduled. Check for distortion or bending. Check bearing bolts and nuts for damage and replace as required.

24. Intake and Discharge Valves

Not Scheduled. Inspect valves and seats for scoring and proper seating. Clean any deposits off of seats and valve plates being very careful not to scratch the surfaces. Lap valve seats if there are any imperfections. Deposits on the valves indicate a dirty intake, the wrong type or excessive oil, or a leaking valve or valve gasket.

Rotary Screw Compressors

25. Air End

Not Scheduled. Check condition of rotors and bearings. Replace if worn or if compressor efficiency had decreased noticeably.

26. Oil Reservoir and Separator

Monthly. Drain condensation from bottom of oil reservoir.

Annual. Check condition of separator element and service or replace if oil consumption is excessive.

27. Oil Filter

Annual. Replace or clean oil filter as required.

VI. CRANES, HOISTS, RIGGING EQUIPMENT, AND ELEVATORS

6.1 Cranes and Hoists

Due to the potential for injury to personnel and damage to equipment, periodic inspection and maintenance of cranes and hoists is very important. A preventive maintenance and inspection program based on the manufacturer's recommendations and applicable industry standards should be established for all cranes, hoists, or other lifting devices. This program should be well documented with detailed records of the inspections and maintenance performed on the equipment.

Section 18 of Reclamation *Safety and Health Standards* lists the requirements for the installation and maintenance of hoisting equipment for Reclamation forces. The American National Standards Institute (ANSI) publishes the following standards that may be useful in setting up an inspection and maintenance program for cranes and hoists: B30.2 "Safety Standard for Overhead and Gantry Cranes"; B30.5 "Safety Code for Crawler, Locomotive, and Truck Cranes"; B30.10 "Hooks"; B30.11 "Monorails and Underhung Cranes"; and B30.16 "Overhead Hoists (Underhung)."

6.2 Ropes, Slings, Chains, and Rigging Hardware

Section 17 of *Reclamation Safety and Health Standards* provides information on ropes, slings, chains, and accessories and their safe use. The *Rigging Manual* published by the Construction Safety Association of Ontario, 74 Victoria Street, Toronto, Canada, M5C2A5 has been designated as the Reclamation Rigging Manual. This publication provides information on safe rigging, load capacities of slings and other rigging equipment, and the inspection of wire rope and slings. The *Rigging* Manual should be used as a guide in determining whether rigging practices are safe and in conformance with industry-wide practices; and while its use is recommended, it is advisory in nature and intended to complement the safety requirements of section 17 of Reclamation Safety and Health Standards. ANSI standard B30.9 "Safety Standard for Slings" also may be helpful in the use and inspection of slings.

Prior to any lift, all of the rigging should be inspected to ensure that it is safe to use. Defective equipment that is repairable should immediately be clearly marked as unsafe and removed from service. Repairs should be made by the manufacturer or in accordance with the manufacturer's written instructions. Repaired equipment shall be tested at twice their rated safe working load. Defective equipment that is not repairable should be cut in half or otherwise rendered unusable to ensure it will not be used. Capacity charts should be consulted; and all variables, such as sling angle, should be considered, to assure that the rigging hardware's rated capacity is not exceeded by the load being lifted.

6.3 Shop Fabricated Lifting Devices and Rigging Hardware

Shop fabricated lifting devices or rigging hardware, including supports or components of a hoist or lifting device, shall not be used unless designed and certified by an engineer qualified in this field and tested at twice the rated safe working load. All lifting devices and rigging hardware shall be designed with a 5:1 factor of safety and in accordance with any applicable ANSI standard.

6.4 Elevators

Section 18 of *Reclamation Safety and Health Standards* lists requirements for the installation and maintenance of elevators and other personnel hoists. Passenger and freight elevators are to be inspected and tested in accordance with ANSI A17.1, "Safety Code for Elevators and Escalators," and ANSI A17.2, "Inspector's Manual for Elevators and Escalators." The inspector shall meet the qualification requirements of American Society of Mechanical Engineers (ASME)/ ANSI QEI-1, "Standard for the Qualification of Elevator Inspectors," and shall be certified by an organization accredited by the ASME in accordance with the requirements of ASME/ANSI QEI-1. If the state or other organization is responsible for elevator inspections, the inspector shall be an employee of that organization or authorized by that organization. Periodic maintenance should be in accordance to the elevator manufacturer's recommendations and any recommendations of the elevator inspector.

6.5 Inspection Checklist

The items listed on the Inspection Checklist that are listed as daily inspections should be done prior to use each day a crane or hoist is used. Regardless of whether or not a crane or hoist has been used, all of the monthly and daily inspections should be performed at least semiannually; and if the crane or hoist has been idle for more than 6 months, the daily, monthly, and annual inspections should be performed before the equipment is used. For a more complete description of inspection techniques and equipment requirements, refer to Reclamation *Safety and Health Standards,* manufacturers' recommendations, the above mentioned ANSI standards, and the *Rigging Manual*.

Inspection Checklist

Cranes and Hoists	***Inspection Interval***	
1. Operating mechanisms	D	A
2. Limit switches	D	A
3. Hooks	D	A
4. Braking systems	D	A
5. Wire rope or load chain	D	A
6. Crane rails, supports, and stops		A
7. Hoist and bridge framework		A
8. Bumpers		A
9. Bridge and trolley conductors and collectors		A
10. Gears, shafts, bearings, and wheels	M	A
11. Catwalks, access ladders, and handrails		A
12. Cab		A
13. Hoist drums and sheaves		M
14. Hydraulic systems	M	NS
15. Mobile cranes	D	A
16. Inspection report		A

Slings and Rigging Hardware

17. Slings (wire rope, chain, synthetic web, etc.)	D	A
18. Rigging hardware (eye bolts, shackles, etc.)	D	A
19. Lifting beams and specialized lifting devices	D	A

Elevators

20. Routine and periodic inspections	S	A

A - Annual
S - Semiannual
M - Monthly
D - Daily (Prior to use, each day equipment is used)
NS - Not scheduled (extraordinary maintenance; usually 5-year or longer intervals)

Cranes and Hoists

1. Operating Mechanisms

Daily. Check control levers and pushbuttons for free movement and for any obstruction that could interfere with proper operation.

Annual. Check controller contacts for signs of pitting or any other deterioration. Check for excessive wear or looseness of control levers.

2. Limit Switches

Daily. Check operation of hoist and travel limit switches without load by carefully inching into limit switch.

Annual. Check electrical contacts for signs of pitting or any other deterioration. Check levers and cams for adequate lubrication and excessive wear.

3. Hooks

Daily. Visually inspect hook for cracks, nicks, gouges, or deformation. Check hook latch operation and hook attachment and securing means. Check that swivel hooks are free to rotate. Hooks having any of the following deficiencies shall be removed from service:

a. Cracks

b. A throat opening of more than 15 percent in excess of normal

c. A bend or twist of more than 10 degrees from the plane of the unbent hook

d. Wear exceeding 10 percent of the original dimension

e. Inoperable hook latch

Annual. Perform magnetic particle, die penetrant, or other nondestructive test in addition to visual inspection. Lubricate swivel and sheave bearings as required.

4. Braking Systems

Daily. Check operation of bridge and trolley brakes and look for leaks in hydraulic lines. Before proceeding with a lift, lift load a few inches and check that hoist brakes are holding. Refer to appendix U of Reclamation *Safety and Health Standards* for information on brake tests for mobile cranes.

Annual. Check brake lining for excessive wear and oil contamination. Check brake drums for scoring. Check operating mechanisms for wear or damage, adequate lubrication, and proper adjustment. Repair or replace parts as required. Check operation of load control braking system.

5.Wire Rope or Load Chain

Daily. Check wire rope to ensure there is no slack in drum or load block and that reeving is proper. Check load chains for worn or damaged links. Check that chain feeds into and away from sprockets smoothly.

Annual. Check wire rope for reduction of diameter, broken wires, wear, corrosion, kinking, crushing, unstranding, and other damage. Pay close attention to end connections and sections normally hidden. Refer to the *Rigging* Manual or the rope manufacturer for recommendations for replacement of the wire rope. Apply lubrication, if required, according to manufacturer's recommendations.

Examine chain for gouges, nicks, weld splatter, corrosion, wear, and distorted links. Refer to the *Rigging* Manual or the chain's manufacturer for guidelines on the replacement of the chain.

6. Crane Rails, Supports, and Stops

Annual. Check rails for alignment and level. Check concrete rail supports for cracking or spalling and steel supports for corrosion and loose bolts or rivets. Repair concrete as required. Tighten loose bolts and rivets. Check that rail stops are securely fastened.

7. Hoist, Trolley, and Bridge Framework

Annual. Check bolts and rivets for tightness. Check all framework for deformation, cracks, and corrosion, paying close attention to load bealing members and welded joints. Clean and repaint as required.

8. Bumpers

Annual. Check for looseness and proper positioning. Check for leaking of hydraulic bumpers and fill to proper level. Check rubber or plastic bumpers for cracks or other damage. Replace or repair as required.

9.Bridge and Trolley Conductors and Collectors

Annual. Check the contact surfaces of open conductors and collectors for signs of arcing damage, pitting, and corrosion. Check condition of insulators. Clean as required. Check that festoon type conductor cable moves freely with bridge and trolley movement. Check the condition of insulation and for kinking in cable.

10. Gears, Shafts, Bearings, and Wheels

Monthly. Check lubrication and look for excessive wear.

Annual. Listen for excessive noise or vibration from bearings. If possible, check clearances of journal bearings. Replace or repair as required. Examine gears for signs of abnormal or excessive wear. Check lubricant levels and check the oil of enclosed gear cases for metal filings. Check drive shafts and couplings for signs of misalignment. Check wheels for excessive wear or other damage. Repair or replace as required.

11. Catwalks, Access Ladders, and Handrails

Annual. See that handrails and ladders are firmly secured and rigid. Check catwalks for obstructions, damaged floorway, or other safety hazards. Walking surfaces of catwalks and ladder landings should be an antiskid type. Check all steel members for corrosion. Clean and paint as required.

12. Cab

Annual. Check cab for loose articles which would interfere with operation and for general housekeeping. Check for broken windows or doors. Check guard rails and doors. Check bolts and rivets for tightness. Check welded joints for cracks. Look for corrosion of steel member. Clean and paint as required.

13.Hoist Drums and Sheaves

Monthly. Visually inspect drums and sheaves for cracks or other damage. Check bearings for wear and proper lubrication. Check grooves of drums and sheaves for wear with sheave gauge. Repair or replace as required

14. Hydraulic Systems

Monthly. Check that pump delivers full pressure. Check piping and cylinder packing for leaks. Check condition of oil filters. Clean or replace as required.

Not Scheduled. Inspect cylinder walls and piston for scoring and wear. Check condition of pump. Inspect valve seats for wear. Repair or replace as required.

15. Mobile Cranes

Daily and Annual. Mobile cranes should be inspected in accordance to applicable portions of sections 18 and 19 and appendix U of Reclamation *Safety and Health Standards.*

16. Inspection Report

Annual. An inspection report similar to figure 44 should be filled out annually to record data obtained during the annual inspection.

Slings and Rigging Hardware

17. Slings (Wire Rope, Chain, Synthetic Web, etc.)

Daily. Check all slings for any damage or defects prior to use. Immediately remove any damaged slings from service and cut in half to ensure it will not be used. One or more of the following conditions shall be sufficient reason for removing a sling from service:

Wire Rope Slings

a. Six randomly distributed broken wires in one rope lay or three broken wires in one strand in one rope lay

b. Wear or scraping of one-third the original diameter of outside individual wires

c. Kinking, crushing, bird caging, or any other damage resulting in distortion of the rope structure

d. Evidence of heat damage

e. End attachments that are cracked, deformed, or worn

f. Corrosion of the rope or end attachments

g. Fiber core rope slings shall be permanently removed from service if exposed to temperatures of 200 ^{o}F plus. Nonfiber core rope temperatures shall not exceed 400 ^{o}F or minus 60 ^{0}F without the manufacturer's recommendation.

OVERHEAD CRANE INSPECTION REPORT

PROJECT_____ **CRANE LOCATION**_____ **CRANE RATING**_____ **DATE**_____

GENERAL COMMENTS

Note condition of each item and any maintenance performed. Check structural components for loose bolts or rivets, deformation, cracks, or other damage. Report any deficiencies to Supervisor immediately and tag main breaker for crane so that it is not used until a determination is made as to whether the deficiencies constitute a safety hazard.

CONTROLS

Lever Operated Controls_____

Pushbutton Pendant Controls_____

Radio Operated Controls_____

BRIDGE

Motor_____

Drive Shaft, Gearing, and Protective Guards and Covers_____

Wheels, Rails and Bumpers_____

Brakes_____

Conductors_____

Bridge Framework_____

TROLLEY

Motor_____

Drive Shaft, Gearing, Bearings, and Protective Guards and Covers_____

Wheels, Rails and Bumpers_____

Brakes_____

Conductors_____

Bridge Framework_____

MAIN HOIST

Motor_____

Holding Brake_____

Load Control Braking System_____

Rope Drum_____

Gearing, Bearings and Protective Guards and Covers_____

Load Blocks, Sheaves, and Equalizers_____

Hook_____

Limit Switch_____

Figure 44a.—Overhead crane inspection report (sheet 1 of 2).

AUXILIARY HOIST

Motor_____

Holding Brake_____

Load Control Braking System_____

Rope Drum_____

Gearing, Bearings and Protective Guards and Covers_____

Load Blocks, Sheaves, and Equalizers_____

Hook_____

Limit Switch_____

MAIN HOIST ROPE

Date Rope In Service---------- _____

Total Number of Broken Wires ---------- _____

Maximum Number of Broken Wires in One Rope Lay ---------- _____

Condition of Rope at End Connections_____

Kinking, Crushing, Wear, Reduction in Diameter, or Other Damage_____

Lubrication, Date Last Lubricated_____

AUXILIARY HOIST ROPE

Date Rope In Service---------- _____

Total Number of Broken Wires ---------- _____

Maximum Number of Broken Wires in One Rope Lay ---------- _____

Condition of Rope at End Connections_____

Kinking, Crushing, Wear, Reduction in Diameter, or Other Damage_____

Lubrication, Date Last Lubricated_____

MISCELLANEOUS

Ladders, Walkways and Handrails_____

Cab_____

Capacity Markings_____

Warning Bell_____

OTHER COMMENTS AND RECOMMENDATIONS_____

Inspection Made By_____

Figure 44b.—Overhead crane inspection report (sheet 2 of 2).

Chain Slings

a. If wear at any point of any chain link or the depth of gouge rounded out portion exceed the values in the table below, the assembly shall be removed from service.

Chain sizes (inches)	Maximum allowable wear (inches)	Chain sizes (inches)	Maximum allowable wear (inches)
1/4	3/64	1	3/16
3/8	5/64	1-1/8	7/32
1/2	7/64	1-1/4	1/4
5/8	9/64	1-3/8	9/32
3/4	5/32	1-1/2	5/16
7/8	11/64	1-3/4	11/32

b. Sharp transverse nicks shall be rounded by grinding.

c. Assemblies with deformed master or coupling links or cracked hooks or attachments shall be removed from service.

d. Alloy steel chains shall be permanently removed from service if heated above 1,000 ^{o}F and capacities reduced if exposed to temperatures of 600 ^{o}F.

Natural and Synthetic Fiber Rope Slings

a. Slings shortened with knots, bolts, or other unapproved methods

b. Damaged slings

c. Rope less than 1/2 inch diameter

d. Slings subjected to a sustained load equal to the rated capacity for more than 3 days

e. Slings made from old rope

f. Slings subjected to chemically active environments unless permitted by the rope manufacturer

g. Frozen rope slings or rope slings subjected to temperatures below minus 20 ^{o}F or above 180 ^{o}F shall be removed from service or have capacities reduced in accordance with manufacturer's requirements.

h. Visual indication of ultra-violet degradation such as:

1) Bleaching out of sling color
2) Increased stiffness of sling material
3) Surface abrasion in areas not normally in contact with the load

Synthetic Webbing Slings

a. Acid or caustic burns

b. Melting, charring, or weld spatter of any part of the sling

c. Holes, tears, cuts, snags, or embedded particles

d. Broken or worn stitches in load bearing splices

e. Wear or elongation exceeding the amount recommended by the manufacturer

f. Distortion, excessive pitting or corrosion, or broken fittings

g. Frozen slings or slings subjected to temperatures below minus 20 ^{o}F or above 180 ^{o}F shall be removed from service or have capacities reduced in accordance with manufacturer's requirements.

h. Knots in any part of the sling

i. Visual indication of ultra-violet degradation such as:

1) Bleaching out of sling color
2) Increased stiffness of sling material
3) Surface abrasion in areas not normally in contact with the load

18. Rigging Hardware (Eye Bolts, Shackles, etc.)

Daily. Check all rigging hardware for damage or defects prior to use. Damaged hardware should be removed from service and cut in half or rendered useless by other means to ensure it can not be used.

Annual. Inspect rigging hardware thoroughly for any damage such as nicks, gouges, or deformation. Refer to the *Rigging* Manual and Reclamation Safety and Health Standards for more information on removal from service requirements.

19. Lifting Beams and Specialized Lifting Devices

Daily. Check for any sign of deformation or other damage. All specialized devices should be designed and certified for use by an engineer competent in the field. Lifting devices designed for a specific operation should not be used for any other operation unless approved by a competent engineer.

Annual. Check for deformation and lubricate bearings and bushings. Check that all pivot points and level indicators are free to move. For rarely used lifting devices, apply a protective coating to areas prone to corrosion. Clean and paint as required.

Elevators

20. Routine and Periodic Inspections

Semiannual. Perform routine inspections and tests in accordance with ANSI A17.1, part X, section 1001 on all electric passenger and freight elevators.

Annual. Perform periodic inspections and tests in accordance with ANSI A17.1, part X, section 1002 on all electric passenger and freight elevators.

MISSION STATEMENTS

The mission of the Department of the Interior is to protect and provide access to our Nation's natural and cultural heritage and honor our trust responsibilities to tribes.

The mission of the Bureau of Reclamation is to manage, develop, and protect water and related resources in an environmentally and economically sound manner in the interest of the American public.

Return to Index