FIST 3-30

TRANSFORMER MAINTENANCE

FACILITIES INSTRUCTIONS, STANDARDS, AND TECHNIQUES

UNITED STATES DEPARTMENT OF THE INTERIOR
BUREAU OF RECLAMATION
DENVER, COLORADO

FIST 3-30
FACILITIES INSTRUCTIONS,
STANDARDS, AND TECHNIQUES

TRANSFORMER MAINTENANCE

October 2000

HYDROELECTRIC RESEARCH AND
TECHNICAL SERVICES GROUP
D-8450

UNITED STATES DEPARTMENT OF THE INTERIOR
BUREAU OF RECLAMATION
DENVER, COLORADO

Acronyms and Abbreviations

A	air
ANA	self-cooled, nonventilated
ANSI	American National Standards Institute
CEGB	Central Electric Generating Board
cfm	cubic feet per minute
CH_4	methane
C_2H_2	acetylene
C_2H_4	ethylene
C_2H_6	ethane
CO	carbon monoxide
CO_2	carbon dioxide
CT	current transformer
DBPC	Ditertiary Butyl Paracresol
DGA	dissolved gas analysis
EHV	extra high voltage
FA	forced air (fans)
FO	forced oil (pumps)
G	some type of gas
GA	gas, self-cooled
gm	grams
GSU	generator step up
H_2	hydrogen
ID	inner diameter
IFT	interfacial tension
IEC	International Electrotechnical Commission
IR	infrared
JHA	job hazard analysis
KOH	potassium hydroxide
kV	kilovolt
kVA	kilovoltampere
kW	kilowatt
IEEE	Institute of Electrical and Electronic Engineers
M/DW	moisture by dry weight
mg	milligram
mva	mega-volt-amps
ND	not detected
N_2	nitrogen
O	oil
O_2	oxygen
OD	outer diameter
ppb	parts per billion
ppm	parts per million
psi	pounds per square inch
Reclamation	Bureau of Reclamation
SCADA	Supervisory Control and Data Acquisition
STP	standard temperature and pressure
TDCG	total dissolved combustible gas
TOA	Transformer Oil Analyst
TTR	transformer turns ratio test
TSC	Technical Service Center
UV	ultraviolet
V	volts
W	water/oil heat exchanger

Contents

Page

1. Purpose . . . . . Last updated October 2000 1

2. Introduction to Reclamation Transformers . . . . . Last updated October 2000 1

3. Transformer Cooling Methods . . . . . Last updated October 2000 1
   3.1 Dry Type Transformers 3
      3.1.1 Potential Problems and Remedial Actions for Dry Type Transformer Cooling Systems 3
   3.2 Liquid-Immersed Transformers 6
      3.2.1 Liquid-Immersed, Air-Cooled 6
      3.2.2 Liquid-Immersed, Air-Cooled/Forced Liquid-Cooled 7
      3.2.3 Liquid-Immersed, Water-Cooled 7
      3.2.4 Liquid-Immersed, Forced Liquid-Cooled 7
      3.2.5 Potential Problems and Remedial Actions for Liquid Filled Transformer Cooling Systems 8
      3.2.6 Cooling System Inspections 9

4. Oil-Filled Transformer Inspections . . . . . Last updated October 2000 10
   4.1 Oil-Filled Transformers 11
      4.1.1 Transformer Tank 11
      4.1.2 Top Oil Thermometers 11
      4.1.3 Winding Temperature Thermometers 11
      4.1.4 Oil Level Indicators 13
      4.1.5 Pressure Relief Devices 14
      4.1.6 Sudden Pressure Relay 16
      4.1.7 Buchholz Relay 17
      4.1.8 Transformer Bushings: Testing and Maintenance of High-Voltage Bushings 18
   4.2 Oil Preservation Sealing Systems 21
      4.2.1 Sealing Systems Types 21
      4.2.2 Gas Pressure Control Components 23
   4.3 Gaskets 28
   4.4 Transformer Oils 35
      4.4.1 Transformer Oil Functions 35
      4.4.2 Dissolved Gas Analysis 35
      4.4.3 Key Gas Method 37
      4.4.4 Transformer Diagnosis Using Individual and Total Dissolved Key Gas Concentrations 37
      4.4.5 Rogers Ratio Method of DGA 48
   4.5 Moisture Problems 53
      4.5.1 Dissolved Moisture in Transformer Oil 57
      4.5.2 Moisture in Transformer Insulation 58
   4.6 Transformer Oil Tests That Should Be Done Annually With the Dissolved Gas Analysis 61
      4.6.1 Dielectric Strength 61

Contents (cont.)

Page

4.6.2 Interfacial Tension (IFT) 61
4.6.3 Acid Number 62
4.6.4 Test for Oxygen Inhibitor 62
4.6.5 Power Factor 63
4.6.6 Furans 63
4.6.7 Taking Oil Samples for DGA 66
4.6.8 Silicone Oil-Filled Transformers 70
4.7 Transformer Testing 76
4.7.1 Winding Resistances 76
4.7.2 Core Insulation Resistance and Inadvertent Core Ground Test 77

References 80

Tables

Table No. *Page*

Dry Type Transformer Maintenance Summary 2
Oil-Filled Transformer Maintenance Summary 5
1 Transformer Gasket Application Summary 31
2 Vertical Groove Compression for Circular Nitrile Gaskets 31
3 Vertical Groove Compression for Rectangular Nitrile Gaskets 33
4 Dissolved Key Gas Concentration Limits in Parts Per Million (ppm) 38
5 Actions Based on Dissolved Combustible Gas 39
6 TOA L1 Limits and Generation Rate Per Month Alarm Limits 44
7 Fault Types 45
8 Dissolved Gas Solubility in Transformer Oil 47
9 Rogers Ratios for Key Gases 50
10 Typical Faults in Power Transformers 54
11 Comparison of Water Distribution in Oil and Paper 55
12 Doble Limits for In-Service Oils 64
13 Additional Guidelines for In-Service Oils 65
14 Comparison of Gas Limits 73
15 Suggested Levels of Concern (Limits) 73
16 Doble and IEEE Physical Test Limits for Service-Aged Silicone Fluid 75
17 Transformer Test Summary Chart 79

Figures

Figure No. *Page*

1 Typical Oil Flow 6
2 Oil Level Indicator 13

Contents (cont.)

Figures (cont.)

Figure No.		*Page*
3	Pressure Relief Device	14
4	Sudden Pressure Relay	16
5	Buchholz Relay	17
6	Free Breathing Transformer	21
7	Pressurized Breathing Transformer	22
8	Pressurized Inert Gas Transformer	23
9	Gas Pressure Control Components	23
10	Free Breathing Conservator	25
11	Conservator with Bladder	26
12	Bladder Failure Relay	26
13	Auxiliary Sealing System	27
14	Cross Section of Circular Gasket in Groove	32
15	Cross Section of Gasket Remains Constant Before Tightening and After	34
16	Bowing at Flanges	35
17	Bolt Tightening Sequences	36
18	Combustible Gas Generation Versus Temperature	41
19	Maximum Amount of Water Dissolved in Mineral Oil Versus Temperature	56
20	Transformer Oil Percent Saturation Curves	57
21	Water Distribution in Transformer Insulation	58
22	Myers Multiplier Versus Temperature	59
23	Water Content of Paper and Oil Nomogram	60
24	Interfacial Tension, Acid Number, Years in Service	62
25	Oil Sampling Piping	68
26	Sample Syringe (Flushing)	68
27	Sample Syringe (Filling)	69
28	Sample Syringe Bubble Removal	69
29	Relationship of Oxygen to Carbon Dioxide and Carbon Monoxide as Transformer Ages	71

1. PURPOSE

This document is to provide guidance to Bureau of Reclamation (Reclamation) powerplant personnel in maintenance, diagnostics, and testing of transformers and associated equipment.

2. INTRODUCTION TO RECLAMATION TRANSFORMERS

Transformers rated 500 kilovoltamperes (kVA) and above are considered power transformers. Reclamation has hundreds of power transformers with voltages as low as 480 volts (V) and as high as 550 kilovolts (kV).

All generator step-up (GSU) transformers, and many station service, and excitation transformers are considered power transformers because they are rated 500 kVA or larger.

Standards organizations such as American National Standards Institute/Institute of Electrical and Electronic Engineers (ANSI/IEEE) consider average GSU transformer life to be 20 to 25 years. This estimate is based on continuous operation at rated load and service conditions with an average ambient temperature of 40 °C (104 °F) and a temperature rise of 65 °C. This estimate is also based on the assumption that transformers receive adequate maintenance over their service life [24]. Reclamation, Bonneville Power Administration, and Western Area Power Administration conduct regular studies to determine statistical equipment life. These studies show that average life of a Reclamation transformer is 40 years. Reclamation gets longer service than IEEE estimates because we operate at lower ambient temperatures and with lower loads. A significant number of transformers were purchased in the 1940s, 1950s, and into the 1970s. Several have been replaced, but we have many that are nearing, or are already well past, their anticipated service life. We should expect transformer replacement and failures to increase due to this age factor.

Current minimum replacement time is around 14 months; a more realistic time may be 18 months to 2 years. In the future, lead times may extend well beyond what they are today. Therefore, high quality maintenance and accurate diagnostics are important for all transformers, but absolutely essential for older ones—especially for critical transformers that would cause loss of generation. It is also very important to consider providing spares for critical transformers.

3. TRANSFORMER COOLING METHODS

Heat is one of the most common destroyers of transformers. Operation at only 10 °C above the transformer rating will cut transformer life by 50%. Heat is caused by internal losses due to loading, high ambient temperature, and solar radiation. It is important to understand how your particular transformers are cooled and how to detect problems in the cooling systems. ANSI and IEEE require the cooling class of each transformer to appear on its nameplate. Cooling classifications, with short explanations, appear in sections 3.1 and 3.2. The letters of the class designate inside atmosphere and type or types of cooling. In some transformers, more than one class of cooling and load rating are indicated. At each

DRY TYPE TRANSFORMER MAINTENANCE SUMMARY

See Section 3.1

When new after energizing and allowing temperature and loading to stabilize	**Do an infrared scan and compare with temperature gage, if any.** **If transformer is gas filled (nitrogen [N_2]), check pressure gage against data sheets; never allow gas pressure to fall below 1 pound per square inch (psi).** **Check loading and compare with nameplate rating.** **Functionally test fans and controls for proper operation.** **Functionally test temperature alarms and annunciator points.** **Check area around transformer clear of debris and parts storage.** **Check transformer room for proper ventilation.**
After 1 week of operation at normal loading	**Perform infrared scan and compare with temperature gage, if any.** **Check temperature gage, if any, and compare with nameplate rating.** **Check loading and compare with nameplate rating.**
Annually **(Note: The time between these periodic inspections may be increased if the first internal inspection of windings and connections are found clean and in good condition and if loading is at or below nameplate rating.)**	**Perform an infrared scan before de-energizing.** **De-energize and remove panels for internal inspection.** **Use vacuum to remove as much dirt as possible.** **After vacuuming, use low pressure dry air (20 to 25 psi) to blow off remaining dirt. Caution: Make sure air is dry.** **Check for discolored copper and discolored insulation.** **Check for corroded and loose connections.** **Check for carbon tracking on insulation and insulators.** **Check for cracked, chipped, and loose insulators.** **If windings are found dirty, add filter material to air intake ports.** **Check fan blades for cleanliness; remove dirt and dust.** **Check fans, controls, alarms and annunciator points.** **Check pressure gage on N_2 filled transformers; compare with weekly data sheets; never allow pressure to fall below 1 psi.** **Repair all problems found in above inspections.**

step of additional cooling, the rating increases to correspond with increased cooling. Note that the letter "A" indicates air, "FA" indicates forced air (fans), "O" indicates oil, "FO" indicates forced oil (pumps), "G" indicates some type of gas, and "W" indicates there is a water/oil heat exchanger.

3.1 Dry Type Transformers

Cooling classes of dry type transformers are covered by ANSI/IEEE standard C57.12.01 Section 5.1 [1]. A short explanation of each class is given below.

1. Class AA are ventilated, self-cooled transformers. This means that there are ventilation ports located in outside walls of the transformer enclosure. There are no fans to force air into and out of the enclosure with typically no external fins or radiators. Cooler air enters the lower ports, is heated as it rises past windings, and exits the upper ventilation ports. (It will not be repeated below; but it is obvious that in every cooling class, some heat is also removed by natural circulation of air around the outside of the enclosure.)

2. Class AFA transformers are self-cooled (A) and additionally cooled by forced circulation of air (FA). This means that there are ventilation ports for fan inlets and outlets only. (Inlets are usually filtered.) Normally, there are no additional ventilation ports for natural air circulation.

3. Class AA/FA transformers are ventilated, self-cooled (same as Class AA in item 1). In addition, they have a fan or fans providing additional forced-air cooling. Fans may be wired to start automatically when the temperature reaches a pre-set value. These transformers generally have a dual load rating, one for AA (self-cooling natural air flow) and a larger load rating for FA (forced air flow).

4. Class ANV transformers are self-cooled (A), non-ventilated (NV) units. The enclosure has no ventilation ports or fans and is not sealed to exclude migration of outside air, but there are no provisions to intentionally allow outside air to enter and exit. Cooling is by natural circulation of air around the enclosure. This transformer may have some type of fins attached outside the enclosure to increase surface area for additional cooling.

5. Class GA transformers are sealed with a gas inside (G) and are self-cooled (A). The enclosure is hermetically sealed to prevent leakage. These transformers typically have a gas, such as nitrogen or freon, to provide high dielectric and good heat removal. Cooling occurs by natural circulation of air around the outside of the enclosure. There are no fans to circulate cooling air; however, there may be fins attached to the outside to aid in cooling.

3.1.1 Potential Problems and Remedial Actions for Dry Type Transformer Cooling Systems [14]. It is important to keep transformer enclosures reasonably clean. It is also important to keep the area around them clear. Any items near or against the transformer impede heat transfer to cooling air around

the enclosure. As dirt accumulates on cooling surfaces, it becomes more and more difficult for air around the transformer to remove heat. As a result, over time, the transformer temperature slowly rises unnoticed, reducing service life.

Transformer rooms and vaults should be ventilated. Portable fans (never water) may be used for additional cooling if necessary. A fan rated at about 100 cubic feet per minute (cfm) per kilowatt (kW) of transformer loss [5], located near the top of the room to remove hot air, will suffice. These rooms/vaults should not be used as storage.

When the transformer is new, check the fans and all controls for proper operation. After it has been energized and the loading and temperature are stable, check the temperature with an infrared (IR) camera and compare loading with the nameplate. Repeat the temperature checks after 1 week of operation.

Once each year under normal load, check transformer temperatures with an IR camera [4,7]. If the temperature rise (above ambient) is near or above nameplate rating, check for overloading. Check the temperature alarm for proper operation. Check enclosures and vaults/rooms for dirt accumulation on transformer surfaces and debris near or against enclosures. Remove all items near enough to affect air circulation. To avoid dust clouds, a vacuum should first be used to remove excess dirt. Low pressure (20 to 25 pounds per square inch [psi]) dry compressed air may be used for cleaning after most dirt has been removed by vacuum. The transformer must be de-energized before this procedure unless it is totally enclosed and there are no exposed energized conductors. Portable generators may be used for lighting.

After de-energizing the transformer, remove access panels and inspect windings for dirt- and heat-discolored insulation and structure problems [14]. It is important that dirt not be allowed to accumulate on windings because it impedes heat removal and reduces winding life. A vacuum should be used for the initial winding cleaning, followed by compressed air [7]. Care must be taken to ensure the compressed air is dry to avoid blowing moisture into windings. Air pressure should not be greater than 20 to 25 psi to avoid imbedding small particles into insulation. After cleaning, look for discolored copper and insulation, which indicates overheating. If discoloration is found, check for loose connections. If there are no loose connections, check the cooling paths very carefully and check for overloading after the transformer has been re-energized. Look for carbon tracking and cracked, chipped, or loose insulators. Look for and repair loose clamps, coil spacers, deteriorated barriers, and corroded or loose connections.

Check fans for proper operation including controls, temperature switches, and alarms. Clean fan blades and filters if needed. A dirty fan blade or filter reduces cooling air flow over the windings and reduces service life. If ventilation ports do not have filters, they may be fabricated from home-furnace filter material. Adding filters is only necessary if the windings are dirty upon yearly inspections.

OIL-FILLED TRANSFORMER MAINTENANCE SUMMARY

Task	After 1 Month of Service	Annually	3 to 5 Years
Before energizing, inspect and test all controls, wiring, fans alarms, and gages.			
Indepth inspection of transformer and cooling system, check for leaks and proper operation. Do a DGA.	Oil pumps load current, oil flow indicators, fans, etc. See 3.2.5, 3.2.6, and 4.1. Thermometers 4.1.2 and 3. Heat exchangers. Transformer tank 4.1.1. Oil level gages 4.1.4. Pressure relief 4.1.5. Do a DGA.	Oil pumps load current, oil flow indicators, fans etc, see 3.2.5, 3.2.6 and 4.1 Thermometers 4.1.2 and 3, heat exchangers Transformer tank 4.1.1 Oil level gages 4.1.4 Pressure relief 4.1.5 Do a DGA	Check diaphragm or bladder for leaks if you have conservator. See 4.2.2.
IR scan of transformer cooling system, bushings and all wiring.	See 3.2.5 and 4.1.8.	See 3.2.5 and 4.1.8.	
Test all controls, relays, gages; test alarms and annunciator points.	See 3.2.5, 4.1.4, 4.1.5.	See 3.2.5 Inspect pressure relief for leaks and indication for operation (rod extension) see 4.1.5	Thermometers. See 4.1.3. Oil level gages 4.1.4. Inspect pressure relief 4.1.5. Sudden pressure relay 4.1.6. Buchholz relay 4.1.7. Test alarms, fan and pump controls, etc. See 3.2.6.
Inspect transformer bushings.	Check with binoculars for cracks and chips; look for oil leaks and check oil levels. IR scan. See 4.1.8.	check with binoculars for cracks and chips, look carefully for oil leaks and check oil levels IR Scan See 4.1.8	
Indepth inspection of bushings, cleaning waxing if needed.			Close physical inspection, cleaning/ waxing, and Doble testing, plus checks in boxes above left. See 4.1.8.
Doble test transformer and bushings.	Doble test transformer and bushings before energizing. See 4.1.8, 4.7.		See 4.1.8 and 4.7.
Inspect pressure controls if you have a nitrogen over oil transformer. Inspect pressure gage.	See 4.2.2.	See 4.2.2. Also see 4.2.1 to test pressure gage if trans has N_2 over oil with no means to automatically add N_2.	

Check pressure gages by looking at the weekly data sheets; if pressure never varies with temperature changes, the gage is defective. Never allow the pressure to go below about 1 psi during cold weather. Add nitrogen to bring the pressure up to 2½ to 3 psi to insure that moist air will not be pulled in.

3.2 Liquid-Immersed Transformers

Cooling classes of liquid-immersed transformers are covered by IEEE C57.12.00 Section 5.1 [2]. A short explanation of each class follows:

3.2.1 Liquid-Immersed, Air-Cooled. There are three classes in this category.

1. Class OA: Oil-immersed, self-cooled. Transformer windings and core are immersed in some type of oil and are self-cooled by natural circulation of air around the outside enclosure. Fins or radiators may be attached to the enclosure to aid in cooling.

2. Class OA/FA: Liquid-immersed, self-cooled/forced air-cooled. Same as OA above, with the addition of fans. Fans are usually mounted on radiators. The transformer typically has two load ratings, one with the fans off (OA) and a larger rating with fans operating (FA). Fans may be wired to start automatically at a pre-set temperature.

3. Class OA/FA/FA: Liquid-immersed, self-cooled/forced air-cooled/forced air-cooled. Same as OA/FA above with an additional set of fans. There typically will be three load ratings corresponding to each increment of cooling. Increased ratings are obtained by increasing cooling air over portions of the cooling surfaces. Typically, there are radiators attached to the tank to aid in cooling. The two groups of fans may be wired to start automatically at pre-set levels as temperature increases. There are no oil pumps. Oil flow through the transformer windings is by the natural principle of convection (heat rising).

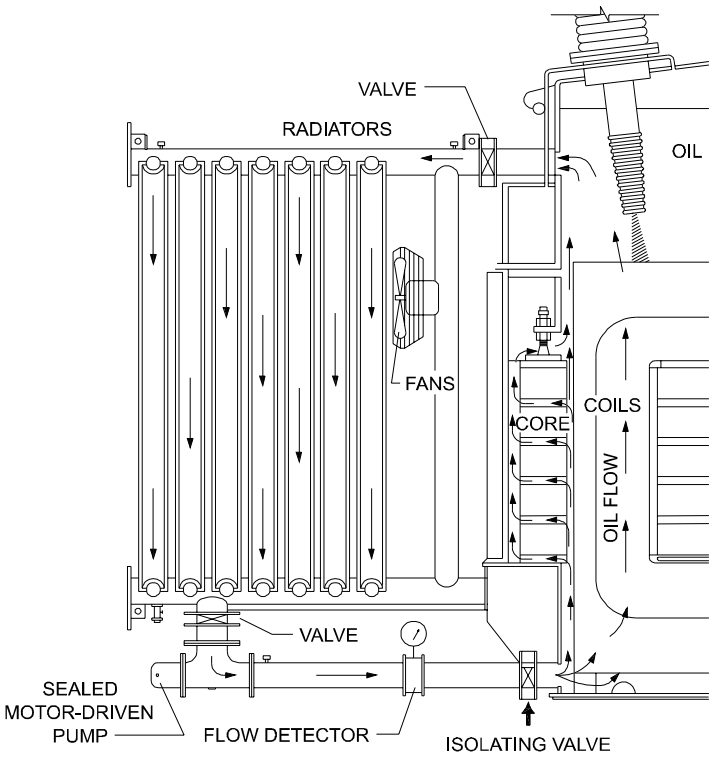

Figure 1.—Typical Oil Flow.

3.2.2 Liquid-Immersed, Air-Cooled/Forced Liquid-Cooled. There are two classes in this group.

1. Class OA/FA/FOA: Liquid-immersed, self-cooled/forced air-cooled/forced liquid, and forced air-cooled. Windings and core are immersed in some type of oil. This transformer typically has radiators attached to the enclosure. The transformer has self-cooling (OA) natural ventilation, forced air-cooling FA (fans), and forced oil-cooling (pumps) with additional forced air-cooling (FOA) (more fans). The transformer has three load ratings corresponding to each cooling step. Fans and pumps may be wired to start automatically at pre-set levels as temperature increases.

2. Class OA/FOA/FOA: Liquid-immersed, self-cooled/forced oil, and forced air-cooled/forced oil, and forced air-cooled. Cooling controls are arranged to start only part of the oil pumps and part of the fans for the first load rating/temperature increase, and the remaining pumps and fans for the second load rating increase. The nameplate will show at least three load ratings.

3.2.3 Liquid-Immersed, Water-Cooled. This category has two classes.

1. Class OW: Transformer coil and core are immersed in oil. Typically a oil/water heat exchanger (radiator) is attached to the outside of the tank. Cooling water is pumped through the heat exchanger, but the oil flows only by natural circulation. As oil is heated by the windings, it rises to the top and exits through piping to the radiator. As it is cooled, the oil descends through the radiator and re-enters the transformer tank at the bottom.

2. Class OW/A: Transformer coil and core are immersed in oil. This transformer has two ratings. Cooling for one rating (OW) is obtained as in 1 above. The self-cooled rating (A) is obtained by natural circulation of air over the tank and cooling surfaces.

3.2.4 Liquid-Immersed, Forced Liquid-Cooled. This category has two classes.

1. Class FOA: Liquid-immersed, forced liquid-cooled with forced air-cooled. This transformer normally has only one rating. The transformer is cooled by pumping oil (forced oil) through a radiator normally attached to the outside of the tank. Also, air is forced by fans over the cooling surface.

2. Class FOW: Liquid-immersed, forced liquid-cooled, water cooled. This transformer is cooled by an oil/water heat exchanger normally mounted separately from the tank. Both the transformer oil and the cooling water are pumped (forced) through the heat exchanger to accomplish cooling.

3.2.5 Potential Problems and Remedial Actions for Liquid Filled Transformer Cooling Systems.

Leaks. Tanks and radiators may develop oil leaks, especially at connections. To repair a leak in a radiator core, you must remove the radiator. Small leaks may also develop in headers or individual pipes. These small leaks possibly may be stopped by peening with a ball peen hammer. Some manufacturer's field personnel try to stop leaks by using a two-part epoxy while the transformer is under vacuum. Do not try this unless the transformer has been drained, because a vacuum may cause bubbles to form in the oil that can lodge in the winding and cause arcing. When all else fails, the leak may be welded with oil still in the radiator, if proper precautions are carefully observed [3, 4]. Welding with oil inside will cause gases to form in the oil. Take an oil sample for a dissolved gas analysis (DGA) before welding and 24 hours after re-energizing to identify gas increases due to welding. If the leak is bad enough, the tank may have to be drained so the leak can be repaired. Treat leaks carefully; do not ignore them. Oil leaks are serious maintenance and environmental issues and should be corrected. Radiators may need to be cleaned in areas where deposits appear on pipes and headers. Dirt and deposits hamper heat transfer to the cooling air. Finned radiators must be cleaned with compressed air when they become dirty.

Plugs. **After 1 month of service and yearly, perform an IR scan and physical inspection of radiators and transformer tanks** [4,7]. Partially plugged radiators will be cooler than those performing normally. You may also feel the radiator pipes by hand. Plugged radiator sections or individual pipes/plenums will be noticeably cooler; however, you will not be able to reach all of them. Radiators may become plugged with sludge or foreign debris; this usually occurs in water tubes on the oil/water heat exchanger. Do not forget to check the bleed line for two-walled heat exchangers.

If plugged radiators are discovered, they need to be corrected as soon as possible. Some radiators are attached to the main tank with flanges and have isolating valves. These may be removed for cleaning and/or leak repair without draining oil from the transformer. If radiators are attached directly to the main tank, oil must be drained before cleaning them. If radiators are plugged with sludge, chances are the transformer is sludged up also. In this case, the oil should be reprocessed and the transformer cleaned internally. Competent contractors should be obtained if this is necessary.

Sludge. If temperature seems to be slowly increasing while the transformer is operating under the same load, check the DGA for moisture, oxygen, and the interfacial tension (IFT). The combination of oxygen and moisture causes sludging, which may be revealed by a low IFT number. Sludge will slowly build up on windings and core, and the temperature will increase over time.

Valve Problems. If your transformer has isolating valves for radiators, check to make sure they are fully open on both top and bottom of the radiators. A broken valve stem may cause the valve to be fully or partially closed, but it will appear that the valve is open.

Mineral Deposits. Don't even think about spraying water on the radiators or tank to increase cooling except in the most dire emergency. Minerals in the water will deposit on radiators as water evaporates and are almost impossible to remove. These minerals will reduce the efficiency of cooling still further. Additional fans blowing on radiators and/or transformer tank is a better alternative [4].

One IR scan performed on a transformer running at higher than normal temperature revealed that the oil level was below the upper radiator inlet pipe, which prevented oil circulation. The oil level indicator was defective and stuck on normal. These indicators must be tested as mentioned below.

3.2.6 Cooling System Inspections. After 1 month of service and yearly, inspect and test the fans. Look at the fans anytime you are around transformers in the switchyard or in the powerplant. If it is a hot day and transformers are loaded, all the fans should be running. If a fan is stopped and the rest of the group is running, the inactive fan should be repaired. During an inspection, the temperature controller should be adjusted to start all the fans. Listen for unusual noises from fan bearings and loose blades and repair or replace faulty fans. Bad bearings can also be detected with an IR scan if the fans are running.

After 1 month of service and yearly, inspect and test the oil pumps. Inspect piping and connections for leaks. Override the temperature controller so that the pump starts. Check the oil pump motor current on all three phases with an accurate ammeter; this will give an indication if oil flow is correct and if unusual wear is causing additional motor loading. Record this information for later comparison, especially if there is no oil flow indicator. **If the motor load current is low, something is causing low oil flow**. Carefully inspect all valves to make sure they are fully open. A valve stem may break and leave the valve partially or fully closed, even though the valve handle indicates the valve is fully open. Pump impellers have been found loose on the shaft, reducing oil flow. Sludge buildup or debris in lines can also cause low oil flow. **If motor load current is high, this may indicate impeded pump rotation.** Listen for unusual noises. Thrust bearing wear results in the impeller advancing on the housing. An impeller touching the housing makes a rubbing sound which is different from the sound of a failing motor bearing. If this is heard, remove the pump motor from the housing and check impeller clearance. Replace the thrust bearing if needed, and replace the motor bearings if the shaft has too much play or if noise is unusual.

Three phase pumps will run and pump some oil even when they are running backwards. Vane type oil-flow meters will indicate flow on this low amount. The best indication of this is that sometimes the pump will be very noisy. The motor load current may also be lower than for full load. If this is suspected due to the extra noise and higher transformer temperature, the pump should be checked for proper rotation. Reverse two phase leads if this is encountered.[4]

After 1 month of service and yearly, check the oil flow indicator. It has a small paddle which extends into the oil stream and may be either on the suction or discharge side of the pump. A low flow of only about 5 feet per second velocity causes the flag to rotate. Flow can be too low, and the indicator will still show flow. If there is no flow, a spring returns the flag to the off position and a switch provides an alarm. With control power on the switch, open the pump circuit at the motor starter and make sure the correct alarm point activates when the pump stops. Check that the pointer is in the right position when the pump is off and when it is running. Pointers can stick and fail to provide an alarm when needed. Oil flow may also be checked with an ultrasonic flow meter. Ultrasonic listening devices can detect worn bearings, rubbing impellers, and other unusual noises from oil pumps.

Pumps can pull air in through gaskets on the suction side of the pumps. The suction (vacuum) on the intake side of the pump can pull air through gaskets that are not tight. Pump suction has also been known to pull air through packing around valve stems, in the suction side piping. This can result in dangerous bubbles in the transformer oil and may cause the gas detector or Buchholz relay to operate. Dissolved gas analysis will show a big increase in oxygen and nitrogen content [4]. High oxygen and nitrogen content can also be caused by gasket leaks elsewhere.

After 1 month of service and yearly, inspect water-oil heat exchangers. Test and inspect the pumps as mentioned above. Look for and repair leaks in piping and heat exchanger body. Examine the latest dissolved gas analysis results for dissolved moisture and free water. If free water is present and there are no gasket leaks, the water portion of the water-oil heat exchanger must be pressure tested. A leak may have developed, allowing water to migrate into the transformer oil, which can destroy the transformer. If the heat exchanges piping is double-walled, check the drain for water or oil; check manufacturer's instruction manual.

4. OIL-FILLED TRANSFORMER INSPECTIONS

A transformer maintenance program must be based on **thorough** routine inspections. These inspections must be in addition to normal daily/weekly data gathering trips to check oil levels and temperatures. Some monitoring may be done remotely using supervisory control and data acquisition (SCADA) systems, but this can never substitute for thorough inspections by competent maintenance or operations people.

4.1 Oil-Filled Transformers

After 1 month of service and once each year, make an indepth inspection of oil-filled transformers. Before beginning, look carefully at temperature and oil level data sheets. If temperature, pressure, or oil level gages never change, even with seasonal temperature and loading changes, something is wrong. The gage may be stuck or data sheets may have been filled in incorrectly. Examine the DGA's for evidence of leaks, etc.

4.1.1 Transformer Tank. Check for excessive corrosion and oil leaks. Pay special attention to flanges and gaskets (bushings, valves, and radiators) and lower section of the main tank. Report oil leaks to maintenance, and pay special attention to the oil level indicator if leaks are found. Severely corroded spots should be wire brushed and painted with a rust inhibitor.

4.1.2 Top Oil Thermometers. These are typically sealed spiral-bourdon-tube dial indicators with liquid-filled bulb sensors. The bulb is normally inside a thermometer well, which penetrates the tank wall into oil near the top of the tank. As oil temperature increases in the bulb, liquid expands, which expands the spiral tube. The tube is attached to a pointer that indicates temperature. These pointers may also have electrical contacts to trigger alarms and start cooling fans as temperature increases. An extra pointer, normally red, indicates maximum temperature since the last time the indicator was reset. This red pointer rises with the main pointer but will not decrease unless manually reset; thus, it always indicates the highest temperature reached since being set. See the instruction manual on your specific transformer for details.

4.1.3 Winding Temperature Thermometers. These devices are supposed to indicate hottest spot in the winding based on the manufacturers heat run tests. At best, this device is only accurate at top nameplate rated load and then only if it is not out of calibration [17]. They are not what their name implies and can be misleading. They are only winding **hottest-spot simulators** and not very accurate. There is no temperature sensor imbedded in the winding hot spot. At best, they provide only a rough approximation of hot spot winding temperature and should not be relied on for accuracy. They can be used to turn on additional cooling or activate alarms as the top oil thermometers do.

Winding temperature thermometers work the same as the top oil thermometer (4.1.2) above, except that the bulb is in a separate thermometer well near the top of the tank. A wire-type heater coil is either inserted into or wrapped around the thermometer well which surrounds the temperature sensitive bulb. In some transformers, a current transformer (CT) is around one of the three winding leads and provides current directly to the heater coil in proportion to winding current. In other transformers, the CT supplies current to an auto-transformer that supplies current to the heater coil. The heater warms the bulb and the dial indicates a temperature, but it is not the true hottest-spot temperature.

These devices are calibrated at the factory by changing taps either on the CT or on the autotransformer, or by adjusting the calibration resistors in the control cabinet. They normally cannot be field calibrated or tested, other than testing the thermometer, as mentioned. The calibration resistors can be adjusted in the field if the manufacturer provides calibration curves for the transformer. In practice, most winding temperature indicators are out of calibration, and their readings are meaningless. These temperature indications should not be relied upon for loading operations or maintenance decisions.

Fiber optic temperature sensors can be imbedded directly into the winding as the transformer is being built and are much more accurate. This system is available as an option on new transformers at an increased cost, which may be worth it since the true winding "hottest-spot" temperature is critical when higher loading is required.

Thermometers can be removed without lowering the transformer oil if they are in a thermometer well. Check your transformer instruction manual. Look carefully at the capillary tubing between the thermometer well and dial indicator. If the tubing has been pinched or accidently struck, it may be restricted. This is not an obvious defect, and it can cause the dial pointer to lock in one position. If this defect is found, the whole gage must be returned to the factory for repair or replacement; it cannot be repaired in the field. Look for a leak in the tubing system; the gage will be reading very low and must be replaced if a leak is discovered. Thermometers should be removed and tested every 3 to 5 years as described below.

***Thermometer Testing*. Every 3 to 5 years, and if trouble is suspected, do a thermometer testing.** Suspend the indicator bulb and an accurate mercury thermometer in an oil bath. Do not allow either to touch the side or bottom of the container. Heat the oil on a hotplate while stirring and compare the two thermometers while the temperature increases. If a magnetic stirring/heating plate is available, it is more effective than hand stirring. Pay particular attention to the upper temperature range at which your transformers normally operate (50 °C to 80 °C). An ohmmeter should also be used to check switch operations. If either dial indicator is more than 5 °C different than the mercury thermometer, it should be replaced with a spare. A number of spares should be kept, based on the quantity of transformers at the plant. Oil bath test kits are available from the Qualitrol Company. After calling for Qualitrol authorization at 716-586-1515, you can ship defective dial thermometers for repair and calibration to: Qualitrol Co., 1387 Fairport Rd., Fairport, NY 14450.

The alarms and other functions should also be tested to see if the correct annunciator points activate, pumps/fans operate, etc.

If it is not possible to replace the temperature gage or send it to the factory for repair, place a temperature correction factor on your data form to add to the dial reading so the correct temperature will be recorded. Also lower the alarm and

pump-turn-on settings by this same correction factor. Since these are pressure-filled systems, the indicator will typically read low if it is out of calibration. Field testing has shown some of these gages reading 15 °C to 20 °C lower than actual temperature. This is hazardous for transformers because it will allow them to continuously run hotter than intended, due to delayed alarms and cooling activation. If thermometers are not tested and errors corrected, transformer service life may be shortened or premature failure may occur.

4.1.4 Oil Level Indicators. After 1 month of service, inspect and every 3 to 5 years, check the tank oil level indicators. These are float operated, with the float mechanism magnetically coupled through the tank wall to the dial indicator. As level increases, the float rotates a magnet inside the tank. Outside the tank, another magnet follows (rotates), which moves the pointer. The center of the dial is normally marked with a temperature 25 °C (77 °F). High and low level points are also marked to follow level changes as the oil expands and contracts with temperature changes. The proper way to determine accurate oil level is to first look at the top oil temperature indicator. After determining the temperature, look at the level gage. The pointer should be at a reasonable level corresponding to the top oil temperature. If the transformer is fully loaded, the top oil temperature will be high, and the level indicator should be near the high mark. If the transformer is de-energized and the top oil temperature is near 25 °C, the oil level pointer should be at or near 25 °C.

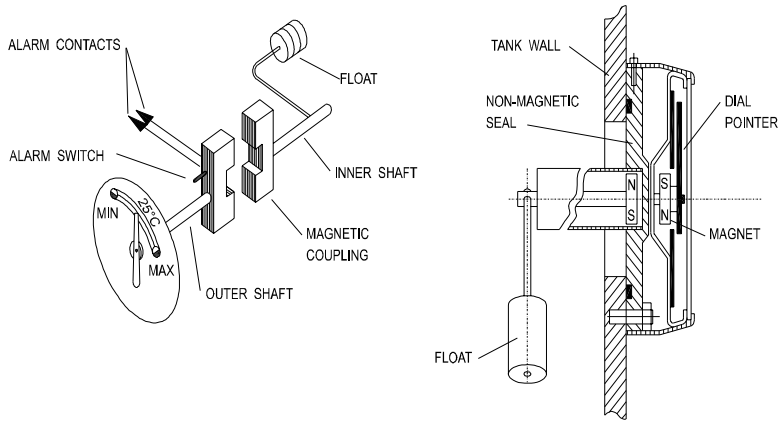

Figure 2.—Oil Level Indicator.

To check the level indicator, you can remove the outside mechanism for testing without lowering transformer oil. After removing the gage, hold a magnet on the back of the dial and rotate the magnet; the dial indicator should also rotate. If it fails to respond or if it drags or sticks, replace it. As mentioned above, defective units can be sent to the factory for repair.

There may also be electrical switches for alarms and possibly tripping off the transformer on falling tank level. These should be checked with an ohmmeter for proper operation. The alarm/tripping circuits should also be tested to see if the correct annunciator points and relays respond. See the transformer instruction book for information on your specific indicator.

If oil has had to be lowered in the transformer or conservator for other reasons (e.g., inspections), check the oil level float mechanism. Rotate the float mechanism by hand to check for free movement. Check the float visually to make sure it is secure to the arm and that the arm is in the proper shape. Some arms are formed (not straight).

4.1.5 Pressure Relief Devices. These devices are the transformers' last line of defense against excessive internal pressure. In case of a fault or short circuit, the resultant arc instantly vaporizes surrounding oil, causing a rapid buildup of gaseous pressure. **If the pressure relief device does not operate properly and pressure is not sufficiently relieved within a few milliseconds, a catastrophic tank rupture can result, spreading flaming oil over a wide area.** Two types of these devices are discussed below. The instruction manual for your transformer must be consulted for specifics.

Caution: Never paint pressure-relief devices because paint can cause the plunger or rotating shaft to stick. Then the device might not relieve pressure, which could lead to catastrophic tank failure during a fault. Look at the top of the device; on newer units, a yellow or blue button should be visible. If these have been painted, the button will be the same color as the tank. On older units, a red flag should be visible; if it has been painted, it will be the same color as the tank.
If they have been painted, they should be replaced. It is virtually impossible to remove all paint from the mechanism and be certain the device will work when needed.

Newer Pressure Relief Devices. Newer pressure relief devices are spring-loaded valves that automatically reclose following a pressure release. The springs are held in compression by the cover and press on a disc which seals an opening in the tank top. If pressure in the tank exceeds operating pressure, the disk moves upward and relieves pressure. As pressure decreases, the springs reclose the valve. After operating, this device leaves a brightly colored rod (bright yellow for oil, blue for silicone) exposed approximately 2 inches above the top. This rod is easily seen upon inspection, although it is not always visible from floor level. The rod may be reset by pressing on the top until it is again recessed into the device. The switch must also be manually reset. A relief device is shown in the open position in figure 3 above.

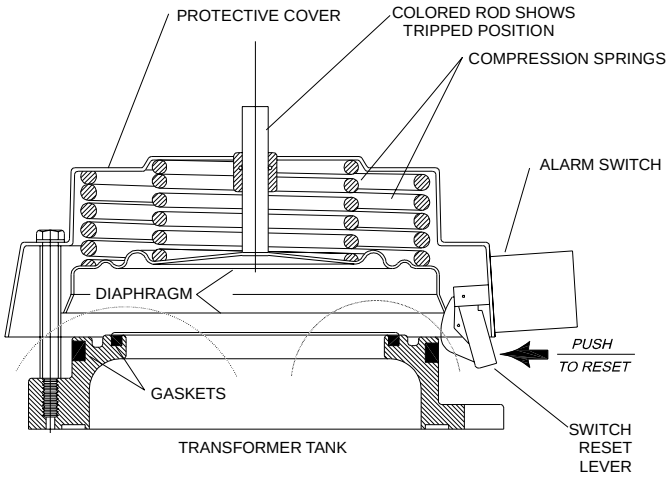

Figure 3.—Pressure Relief Device.

Caution: Bolts that hold the device to the tank may be loosened safely, but never loosen screws which hold the cover to the flange without referring to the instruction manual and using great care. Springs that oppose tank pressure are held in compression by these screws, and their stored energy could be hazardous.

Once each year, and as soon as possible after a known through-fault or internal fault, inspect pressure devices to see if they have operated. This must be done from a high-lift bucket if the transformer is energized. Look at each pressure relief device to see if the yellow (or blue) button is visible. If the device has operated, about 2 inches of the colored rod will be visible. Each year, test the alarm circuits by operating the switch by hand and making sure the correct annunciator point is activated. If the relief device operates during operation, do not re-energize the transformer; Doble and other testing may be required before re-energizing, and an oil sample should be sent for analysis

Every 3 to 5 years, when doing other maintenance or testing, if the transformer has a conservator, examine the top of the transformer tank around the pressure relief device. If oil is visible, the device is leaking, either around the tank gasket or relief diaphragm. If the device is 30 years old, replace the whole unit. A nitrogen blanketed transformer will use a lot more nitrogen if the relief device is leaking; they should be tested as described below.

A test stand with a pressure gage may be fabricated to test the pressure relief function. Current cost of a pressure relief device is about $600, so testing instead of replacement may be prudent. Have a spare on hand so that the tank will not have to be left open. If the tank top or pressure relief device has gasket limiting grooves, always use a nitrile replacement gasket; if there are no grooves, use a cork-nitrile gasket. Relief devices themselves do not leak often; the gasket usually leaks.

Older Pressure Relief Devices. Older pressure relief devices have a diaphragm and a relief pin that is destroyed each time the device operates and must be replaced.

Caution: These parts **must be** replaced with exact replacement parts, or the operating relief-pressure of the device will be wrong.

The relief pin determines operating pressure; a number, which is the operating pressure, normally appears on top of the pin. Check your specific transformer instruction manual for proper catalog numbers. Do not assume you have the right parts, or that correct parts have been previously installed—look it up. If the operating pressure is too high, a catastrophic tank failure could result.

On older units, a shaft rotates, operates alarm/trip switches, and raises a small red flag when the unit releases pressure. If units have been painted or are more than 30 years old, they should be replaced with the new model as soon as it is possible to have a transformer outage.

Once each year and as soon as possible after a through-fault or internal fault, examine the indicator flag to see if the device has operated. They must be examined from a high-lift bucket if the transformer is energized. A clearance must be obtained to test, repair, or reset the device. See the instruction manual for your specific transformer. Test alarm/trip circuits by operating the switch byhand. Check to make sure the correct annunciator point activates.

Every 3 to 5 years, when doing other maintenance or testing, examine the top of the transformer tank around the pressure relief device. If the transformer has a conservator and oil is visible, the device is leaking, either around the tank gasket or relief diaphragm. The gasket and/or device must be replaced. Take care that the new device will fit the same tank opening prior to ordering. Most of them are made by the Qualitrol Company; contact the manufacturer to obtain a correct replacement.

4.1.6 Sudden Pressure Relay. Internal arcing in an oil-filled power transformer can instantly vaporize surrounding oil, generating gas pressures that can cause catastrophic failure, rupture the tank, and spread flaming oil over a large area. This can damage or destroy other equipment in addition to the transformer and presents extreme hazards to workers.

The relay is designed to detect a sudden pressure increase caused by arcing. It is set to operate before the pressure relief device. The control circuit should de-energize the transformer and provide an alarm. The relay will ignore normal pressure changes such as oil-pump surges, temperature changes, etc.

Modern sudden pressure relays consist of three bellows (see figure 4) with silicone sealed inside. Changes in pressure in the transformer deflect the main sensing bellows. Silicone inside acts on two control bellows arranged like a balance beam, one on each side. One bellows senses pressure changes through a small orifice. The opening is automatically changed by a bimetallic strip to adjust for normal temperature changes of the oil. The orifice delays pressure changes in this bellows. The other bellows responds to immediate pressure changes and is affected much more quickly. Pressure difference tilts the balance beam and activates the switch. This type relay automatically resets

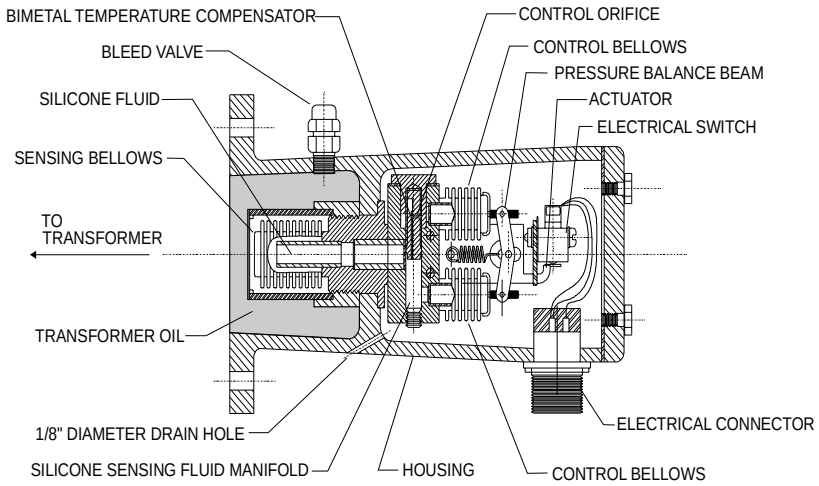

Figure 4.—Sudden Pressure Relay.

when the two bellows again reach pressure equilibrium. If this relay operates, do not re-energize the transformer until you have determined the exact cause and corrected the problem.

Old style sudden pressure relays have only one bellows. A sudden excessive pressure within the transformer tank exerts pressure directly on the bellows, which moves a spring-loaded operating pin. The pin operates a switch which provides alarm and breaker trip. After the relay has operated, the cap must be removed and the switch reset to normal by depressing the reset button.

Once every 3 to 5 years, the sudden pressure relay should be tested according to manufacturer's instructions. Generally, only a squeeze-bulb and pressure gage (5 psi) are required. Disconnect the tripping circuit and use an ohmmeter to test for relay operation. Test the alarm circuit and verify that the correct alarm point is activated. Use an ohmmeter to verify the trip signal is activated or, if possible, apply only control voltage to the breaker and make sure the tripping function operates. Consult the manufacturer's manual for your specific transformer for detailed instructions.

4.1.7 Buchholz Relay (found only on transformers with conservators). The Buchholz relay has two oil-filled chambers with floats and relays arranged vertically one over the other. If high eddy currents, local overheating, or partial discharges occur within the tank, bubbles of resultant gas rise to the top of the tank. These rise through the pipe between the tank and the conservator. As gas bubbles migrate along the pipe, they enter the Buchholz relay and rise into the top chamber. As gas builds up inside the chamber, it displaces the oil, decreasing the level. The top float descends with oil level until it passes a magnetic switch which activates an alarm. The bottom float and relay cannot be activated by additional gas buildup. The float is located slightly below the top of the pipe so that once the top chamber is filled, additional gas goes into the pipe and on up to the conservator. Typically, inspection windows are provided so that the amount of gas and relay operation may be viewed during testing. If the oil level falls low enough (conservator empty), switch contacts in the bottom chamber are activated by the bottom

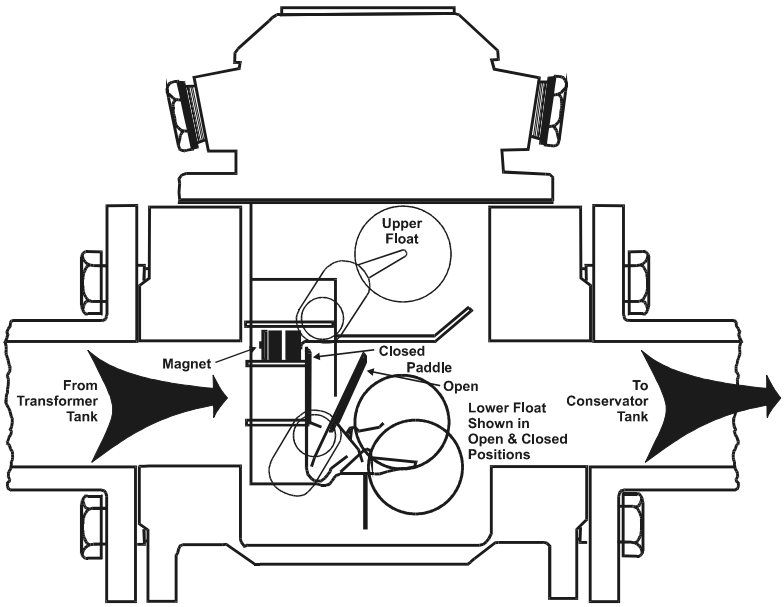

Figure 5.—Buchholz Relay.

float. These contacts are typically connected to cause the transformer to trip. This relay also serves a third function, similar to the sudden pressure relay. A magnetically held paddle attached to the bottom float is positioned in the oil-flow stream between the conservator and transformer tank. Normal flows resulting from temperature changes are small and bypass below the paddle. If a fault occurs in the transformer, a pressure wave (surge) is created in the oil. This surge travels through the pipe and displaces the paddle. The paddle activates the same magnetic switch as the bottom float mentioned above, tripping the transformer. The flow rate at which the paddle activates the relay is normally adjustable. See your specific transformer instruction manual for details.

Once every 3 to 5 years while the transformer is de-energized, functionally test the Buchhholz relay by pumping a small amount of air into the top chamber with a squeeze bulb hand pump. Watch the float operation through the window. Check to make sure the correct alarm point has been activated. Open the bleed valve and vent air from the chamber. The bottom float and switching cannot be tested with air pressure. On some relays, a rod is provided so that you can test both bottom and top sections by pushing the floats down until the trip points are activated. If possible, verify that the breaker will trip with this operation. A volt-ohmmeter may also be used to check the switches. If these contacts activate during operation, it means that the oil level is very low, or a pressure wave has activated (bottom contacts), or the transformer is gassing (top contacts). If this relay operates, do not re-energize the transformer until you have determined the exact cause.

4.1.8 Transformer Bushings: Testing and Maintenance of High-Voltage Bushings. When bushings are new, they should be Doble tested as an acceptance test. Refer to the M4000 Doble test set instructions, the Doble Bushing Field Test Guide [8], and the manufacturer's data for guidance on acceptable results.

Caution: Do not test a bushing while it's in its wood shipping crate, or while it is lying on wood. Wood is not as good an insulator as porcelain and will cause the readings to be inaccurate. Keep the test results as a baseline record to compare with future tests.

After 1 month of service and yearly, check the external porcelain for cracks and/or contamination (requires binoculars). There is no "perfect insulator"; a small amount of leakage current always exists. This current "leaks" through and along the bushing surface from the high-voltage conductor to ground. If the bushing is damaged or heavily contaminated, leakage current becomes excessive, and visible evidence may appear as carbon tracking (treeing) on the bushing surface. Flashovers may occur if the bushings are not cleaned periodically.

Look carefully for oil leaks. Check the bushing oil level by viewing the oil-sight glass or the oil level gage. When the bushing has a gage with a pointer, look carefully, because the oil level should vary a little with temperature changes. If the pointer never changes, even with wide ambient temperature and load changes,

the gage should be checked at the next outage. A stuck gage pointer coupled with a small oil leak can cause explosive failure of a bushing, damaging the transformer and other switchyard equipment. A costly extended outage is the result.

If the oil level is low and there is an external oil leak, check the bolts for proper torque and the gasket for proper compression. If torque and compression are correct, the bushing must be replaced with a spare. Follow instructions in the transformer manual carefully. It is very important that the correct type gasket be installed and the correct compression be applied. A leaky gasket is probably also leaking water and air into the transformer, so check the most recent transformer DGA for high moisture and oxygen.

If the oil level is low and there is no visible external leak, there may be an internal leak around the lower seal into the transformer tank. If possible, re-fill the bushing with the same oil and carefully monitor the level and the volume it takes to fill the bushing to the proper level. If it takes more than one quart, make plans to replace the bushing. The bushing must be sent to the factory for repair or it must be junked; it cannot be repaired in the field.

Caution: Never open the fill plug of any bushing if it is at an elevated temperature. Some bushings have a nitrogen blanket on top of the oil, which pressurizes as the oil expands. Always consult the manufacturer's instruction manual which will give the temperature range at which the bushing may be safely opened. Generally, this will be between 15 °C (59 °F) and 35 °C (95 °F). Pressurized hot oil may suddenly gush from the fill plug if it is removed while at elevated temperature, causing burn hazards. Generally, the bushing will be a little cooler than the top oil temperature, so this temperature gage may be used as a guide if the gage has been tested as mentioned in 4.1.3.

About 90% of all preventable bushing failures are caused by moisture entering through leaky gaskets, cracks, or seals. Internal moisture can be detected by Doble testing. See FIST 3-2 [9] and Doble Bushing Field Test Guide [8] for troubles and corrective actions. Internal moisture causes deterioration of the insulation of the bushing and can result in explosive failure, causing extensive transformer and other equipment damage, as well as hazards to workers.

After 1 month of service and yearly, examine the bushings with an IR camera [4,7]; if one phase shows a markedly higher temperature, there is probably a bad connection. The connection at the top is usually the poor one; however, a bad connection inside the transformer tank will usually show a higher temperature at the top as well. In addition, a bad connection inside the transformer will usually show hot metal gases (ethane and ethylene) in the DGA.

Once every 3 to 5 years, a close physical inspection and cleaning should be done [9]. Check carefully for leaks, cracks, and carbon tracking. This inspection will be required more often in atmospheres where salts and dust deposits appear on the

bushings. In conditions that produce deposits, a light application of Dow Corning grease DC-5 or GE Insulgel will help reduce risk of external flashover. The downside of this treatment is that a grease buildup may occur. In high humidity and wet areas, a better choice may be a high quality silicone paste wax applied to the porcelain, which will reduce the risk of flashover. A spray-on wax containing silicone, such as Turtle Wax brand, has been found to be very useful for cleaning and waxing in one operation, providing the deposits are not too hard. Wax will cause water to form beads rather than a continuous sheet, which reduces flashover risk. Cleaning may involve just spraying with Turtle Wax and wiping with a soft cloth. A lime removal product, such as "Lime Away," also may be useful. More stubborn contaminates may require solvents, steel wool, and brushes. A high pressure water stream may be required to remove salt and other water soluble deposits. Limestone powder blasting with dry air will safely remove metallic oxides, chemicals, salt-cake, and almost any hard contaminate. Other materials, such as potters clay, walnut or pecan shells, or crushed coconut shells, are also used for hard contaminates. Carbon dioxide (CO_2) pellet blasting is more expensive but virtually eliminates cleanup because it evaporates. Ground up corn-cob blasting will remove soft pollutants such as old coatings of built-up grease. A competent experienced contractor should be employed and a thorough written job hazard analysis (JHA) performed when any of these treatments are used.

Corona (air ionization) may be visible at tops of bushings at twilight or night, especially during periods of rain, mist, fog, or high humidity. At the top, corona is considered normal; however, as a bushing becomes more and more contaminated, corona will creep lower and lower. If the bushing is not cleaned, flashover will occur when corona nears the grounded transformer top. If corona seems to be lower than the top of the bushing, inspect, Doble test, and clean the bushing as quickly as possible. If flashover occurs (phase to ground fault), it could destroy the bushing and cause an extended outage. Line-to-line faults also can occur if all the bushings are contaminated and flashover occurs. A corona scope may be used to view and photograph low levels of corona indoors under normal illumination and outdoors at twilight or night. High levels of corona may possibly be viewed outdoors in the daytime if a dark background is available, such as trees, canyon walls, buildings, etc. The corona scope design is primarily for indoor and night time use; it cannot be used with blue or cloudy sky background. This technology is available at the Technical Service Center (TSC), D-8450.

Caution: See the transformer manual for detailed instructions on cleaning and repairing your specific bushing surfaces. Different solvents, wiping materials, and cleaning methods may be required for different bushings. Different repair techniques may also be required for small cracks and chips. Generally, glyptal or insulating varnish will repair small scratches, hairline cracks, and chips. Sharp edges of a chip should be honed smooth, and the defective area painted with insulating varnish to provide a glossy finish. Hairline cracks in the surface of the porcelain must be sealed because accumulated dirt and moisture in the crack may result in flashover. Epoxy should be used to repair larger chips. If a bushing

insulator has a large chip that reduces the flashover distance or has a large crack totally through the insulator, the bushing must be replaced. Some manufacturers offer repair service to damaged bushings that cannot be repaired in the field. Contact the manufacturer for your particular bushings if you have repair questions.

Once every 3 to 5 years, depending on the atmosphere and service conditions, the bushings should be Doble tested. Refer to Doble M-4000 test set instructions, Doble Bushing Field Test Guide [8], FIST 3-2, [9] and the manufacturer's instructions for proper values and test procedures. Bushings should be cleaned prior to Doble testing. Contamination on the insulating surface will cause the results to be inaccurate. Testing may also be done before and after cleaning to check methods of cleaning. As the bushings age and begin to deteriorate, reduce the testing interval to 1 year. Keep accurate records of results so that replacements can be ordered in advance, before you have to remove bushings from service.

4.2 Oil Preservation Sealing Systems

The purpose of sealing systems is to prevent air and moisture from contaminating oil and cellulose insulation. Sealing systems are designed to prevent oil inside the transformer from coming into contact with air. Air contains moisture, which causes sludging and an abundant supply of oxygen. Oxygen in combination with moisture causes greatly accelerated deterioration of the cellulose. This oxygen-moisture combination will greatly reduce service life of the transformer.

Sealing systems on many existing Reclamation power transformers are of the inert gas (nitrogen) pressure design; however, we have many other designs. Current practice is to buy only conservator designs with bladders for transformer voltages 115 kV and above and capacities above 10 mega-volt-amps (mva). Below these values, we buy only inert gas pressure system transformers, as depicted in figure 8.

Some of the sealing systems are explained below. There may be variations of each design, and not every design is covered. The order below is roughly from earlier to more modern.

4.2.1 Sealing Systems Types.

Free Breathing. Sealing systems have progressed from early designs of "free breathing" tanks, in which an air space on top of the oil is

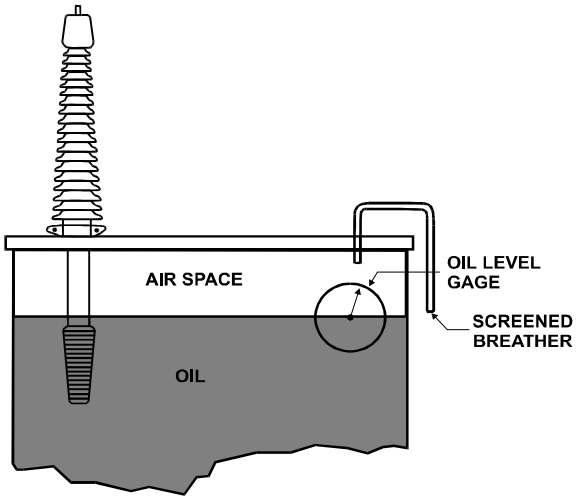

Figure 6.—Free Breathing Transformer.

vented to atmosphere through a breather pipe. The pipe typically is screened to keep out insects and rodents and turned down to prevent rain from entering. Breathing is caused by expansion and contraction of the oil as temperature changes. These earlier designs did not use an air dryer, and condensation from moisture formed on inside walls and tank top. Moisture, oxygen, and nitrogen would also dissolve directly into oil from the air. This was not the best design. As mentioned before, a combination of oxygen and moisture accelerates deterioration of cellulose insulation. Moisture also decreases dielectric strength, destroying insulating quality of the oil, and causes formation of sludge. If you have one or more of these earlier design transformers, it is recommended that a desiccant type air dryer be added to the breather pipe.

Sealed or Pressurized Breathing. This design is similar to the free breathing one with addition of a pressure/vacuum bleeder valve. When the transformer was installed, pressurized dry air or nitrogen was placed on top of the oil. The bleeder valve is designed to hold pressure inside to approximately plus or minus 5 psi (figure7). The same problems with moisture and oxygen occur as previously described. Problems are not as severe because "breathing" is limited by the bleeder valve. Air or N_2 is exhausted to the outside atmosphere when a positive pressure more than 5 psi occurs inside the tank. This process does not add moisture and oxygen to the tank. However, when cooling, the oil contracts and, if pressure falls 5 psi below the outside atmosphere, the valve allows outside air into the tank, which pulls in moisture and oxygen.

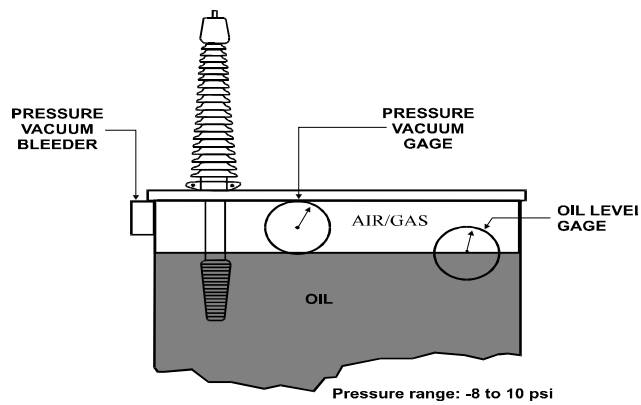

Figure 7.—Pressurized Breathing Transformer.

Once each year, check the pressure gage against the weekly data sheets; if the pressure never varies with seasonal temperature changes, the gage is defective. Add nitrogen if the pressure falls below 1 psi to keep moisture laden air from being pulled in. Add enough N_2 to bring the pressure to 2 to 3 psi.

Pressurized Inert Gas Sealed System. This system keeps space above the oil pressurized with a dry inert gas, normally nitrogen (figure 8). This design prevents air and moisture from coming into contact with insulating oil. Pressure is maintained by a nitrogen gas bottle with the pressure regulated normally between 0.5 and 5 psi. Pressure gages are provided in the nitrogen cubicle for both high and low pressures (figure 9). A pressure/ vacuum gage is normally

connected to read low pressure gas inside the tank. This gage may be located on the transformer and normally has high and low pressure alarm contacts. See section 4.2.2 which follows.

Caution: When replacing nitrogen cylinders, do not just order a "nitrogen cylinder" from the local welding supplier. Nitrogen for transformers should meet ASTM D-1933 Type III with - 59 °C dew point as specified in IEEE C-57.12.00-1993, paragraph 6.6.3 [27, 2].

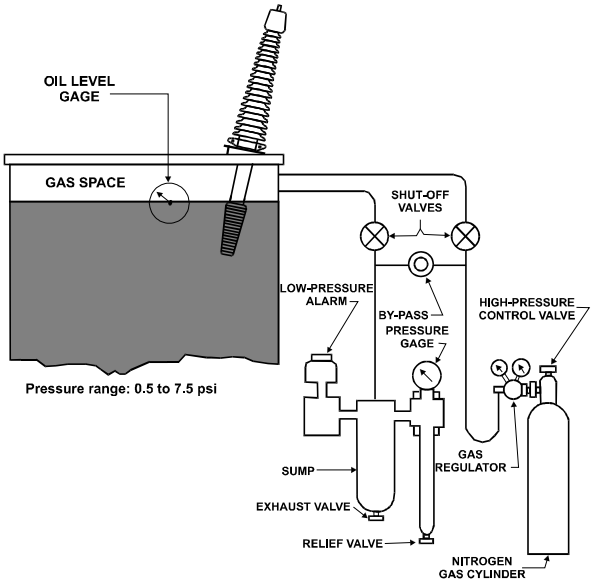

Figure 8.—Pressurized Inert Gas Transformer.

4.2.2 Gas Pressure Control Components. After 1 month of service and yearly, inspect the gas pressure control components. There is normally an adjustable, three-element pressure control system for inert gas, which maintains a pressure range of 0.5 to 5 psi in the transformer tank. There is also a bleeder valve that exhausts gas to atmosphere when pressure exceeds relief pressure of the valve, normally 5 to 8 psi.

Caution: The component part descriptions below are for the typical three-stage pressure regulating equipment supplying inert gas to the transformer. Your particular unit may be different, so check your transformer instruction manual.

High Pressure Gage. The high pressure gage is attached between the nitrogen cylinder and high pressure regulator that indicates cylinder pressure. When the cylinder is full, the gage will read approximately

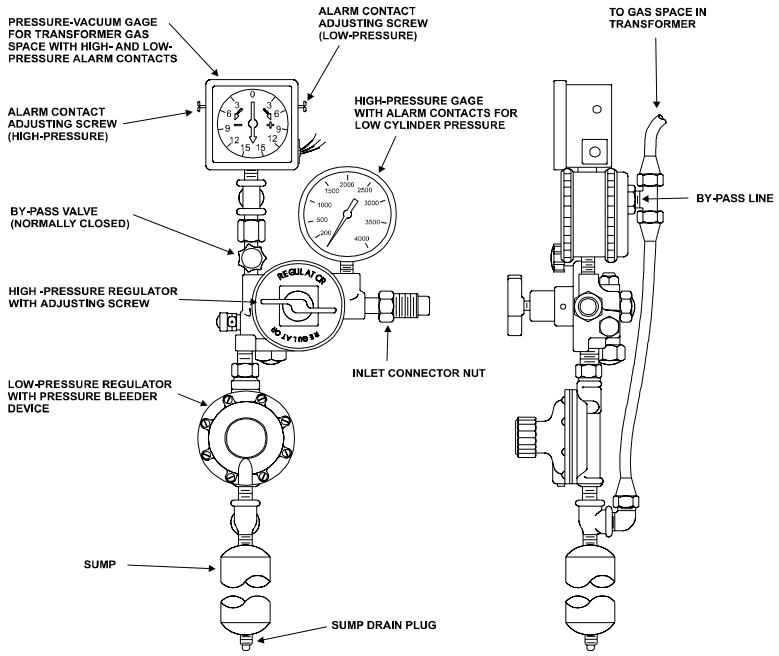

Front View **Side View**

Figure 9.—Gas Pressure Control Components.

2,400 psi. Normally, the gage will be equipped with a low pressure alarm that activates when the cylinder is getting low (around 500 psi). However, gas will still be supplied, and the regulating equipment will continue to function until the cylinder is empty. Refer to figure 9 for the following descriptions.

High Pressure Regulator. The high pressure regulator has two stages. The input of the first stage is connected to the cylinder, and the output of the first stage is connected internally to the input of the second stage. This holds output pressure of the second stage constant. The first stage output is adjustable by a hand-operated lever and can deliver a maximum of whatever pressure is in the cylinder (2,400 psi when full) down to zero. The second stage output is varied by turning the adjusting screw, normally adjusted to supply approximately 10 psi to the input of the low pressure regulator.

Low Pressure Regulator. The low pressure regulator is the third stage and controls pressure and flow to the gas space of the transformer. The input of this regulator is connected to the output of the second stage (approximately 10 psi). This regulator is typically set at the factory to supply gas to the transformer at a pressure of approximately 0.5 psi and needs no adjustment. If a different pressure is required, the regulator can be adjusted by varying spring tension on the valve diaphragm. Pressure is set at this low value because major pressure changes inside the transformer come from expansion and contraction of oil. The purpose of this gas feed is to make up for small leaks in the tank gaskets and elsewhere so that air cannot enter. Typically, a spring-loaded bleeder for high pressure relief is built into the regulator and is set at the factory to relieve pressures in excess of 8 psi. The valve will close when pressure drops below the setting, preventing further loss of gas.

Bypass Valve Assembly. The bypass valve assembly opens a bypass line around the low pressure regulator and allows the second stage of the high pressure regulator to furnish gas directly to the transformer. The purpose of this assembly is to allow much faster filling/purging of the gas space during initial installation or if the transformer tank has to be refilled after being opened for inspection.

Caution: During normal operation, the bypass valve must be closed, or pressure in the tank will be too high.

Oil Sump. The oil sump is located at the bottom of the pressure regulating system between the low pressure regulator and shutoff valve C. The sump collects oil and/or moisture that may have condensed in the low pressure fill line. The drain plug at the bottom of the sump should be removed before the system is put into operation and also removed once each year during operation to drain any residual oil in the line. This sump and line will be at the same pressure as the gas space in the top of the transformer. The sump should always be at a safe pressure (less than 10 psi) so the plug can be removed to allow the line to purge a few seconds and blow out the oil. However, **always** look at the gas space pressure

gage on the transformer or the low pressure gage in the nitrogen cabinet, just to be sure, before removing the drain plug.

Shutoff Valves. The shutoff valves are located near the top of the cabinet for the purpose of isolating the transformer tank for shipping or maintenance. These valves are normally of double-seat construction and should be fully opened against the stop to prevent gas leakage around the stem. A shutoff valve is also provided for the purpose of shutting off the nitrogen flow to the transformer tank. This shutoff valve must be closed prior to changing cylinders to keep the gas in the transformer tank from bleeding off.

Sampling and Purge Valve. The sampling and purge valve is normally located in the upper right of the nitrogen cabinet. This valve is typically equipped with a hose fitting; the other side is connected directly to the transformer gas space by copper tubing. This valve is opened while purging the gas space during a new installation or maintenance refill and provides a path to exhaust air as the gas space is filled with nitrogen. This valve is also opened when a gas sample is taken from the gas space for analysis. When taking gas samples, the line must be sufficiently purged so that the sample will be from gas above the transformer oil and not just gas in the line. This valve must be tightly closed during normal operation to prevent gas leakage.

Free Breathing Conservator. This design adds an expansion tank (conservator) above the transformer so that the main tank may be completely filled with oil. Oil expansion and air exchange with the atmosphere (breathing) occurs away from the oil in the transformer. This design reduces oxygen and moisture contamination because only a small portion of oil is exchanged between the main tank and conservator. An oil/air interface still exists in the conservator, exposing the oil to air. Eventually, oil in the conservator is exchanged with oil in the main tank, and oxygen and other contaminates gain access to the insulation.

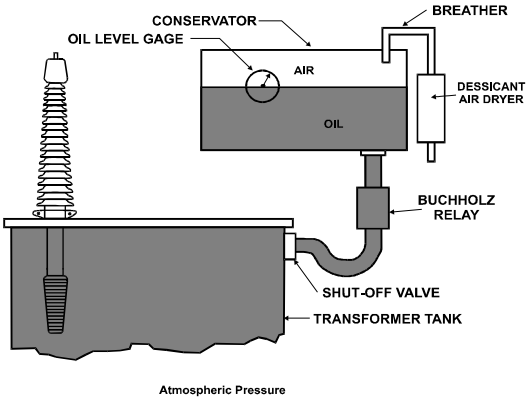

Figure 10.—Free Breathing Conservator.

If you have transformers of this design, it is recommended that a bladder or diaphragm-type conservator be installed (described below) or retrofitted to the original conservator. In addition, a desiccant-type air dryer should also be installed.

Conservator with Bladder or Diaphragm Design. A conservator with bladder or diaphragm is similar to the design above with an added air bladder (balloon) or flat diaphragm in the conservator. The bladder or diaphragm expands and

contracts with the oil and isolates it from the atmosphere. The inside of the bladder or top of the diaphragm is open to atmospheric pressure through a desiccant air dryer. As oil expands and contracts and as atmospheric pressure changes, the bladder or diaphragm "breathes" air in and out. This keeps air and transformer oil essentially at atmospheric pressure. The oil level gage on the conservator typically is magnetic, like those mentioned earlier, except the float is positioned near the center of the **underside** of the bladder. With a diaphragm, the level indicator arm rides **on top** of the diaphragm. Examine the air dryer periodically and change the desiccant when approximately one-third of the material changes color.

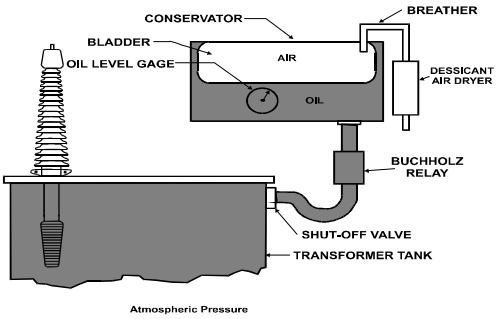

Figure 11.—Conservator with Bladder.

Note: A vacuum will appear in the transformer if piping between the air dryer and conservator is too small, if the air intake to the dryer is too small, or if the piping is partially blocked. The bladder cannot take in air fast enough when the oil level is decreasing due to rapidly falling temperature. Minium ¾- to 1-inch piping is recommended. This problem is especially prevalent with transformers that are frequently in and out of service and located in geographic areas of large temperature variations. This situation may allow bubbles to form in the oil and may even activate gas detector relays such as the Buchholz and/or bladder failure relay. The vacuum may also pull in air around gaskets that are not tight enough or that have deteriorated (which may also cause bubbles) [4].

Bladder Failure (Gas Accumulator) Relay. The bladder failure relay (not on diaphragm-type conservators) is mounted on top the conservator for the purpose of detecting air bubbles in the oil. Shown at right (figure 12) is a modern relay. Check your transformer instruction manual for specifics because designs vary with manufacturers. No bladder is totally impermeable, and a little air will migrate into the oil. In addition, if a hole forms in the bladder, allowing air to migrate into the oil, the relay will detect it. As air rises and enters the relay, oil is displaced and the float drops, activating the alarm. It is similar to the top chamber of a Buchholz relay, since it is filled with oil and contains a float switch.

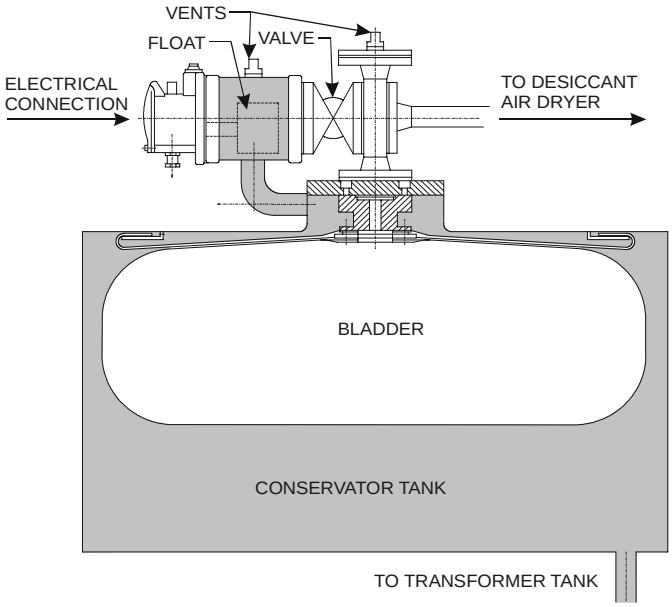

Figure 12.—Bladder Failure Relay.

Caution: Never open the vent of the bladder failure relay unless you have vacuum or pressure equipment available. The oil will fall inside the relay and conservator and pull in air from the outside. You will have to recommission the relay by valving off the conservator and pressurizing the bladder or by placing a vacuum on the relay. See your specific transformer instruction manual for details.

Caution: When the transformer, relay, and bladder are new, some air or gas is normally entrapped in the transformer and piping and takes a while to rise and activate the relay. Do not assume the bladder has failed if the alarm activates within 2 to 3 months after it is put into operation. If this occurs, you will have to recommision the relay with pressure or vacuum. See your specific transformer instruction manual for details. If no more alarms occur, the bladder is intact. If alarms continue, look carefully for oil leaks in the conservator and transformer. An oil leak is usually also an air leak. This may be checked by looking at the nitrogen and oxygen in the dissolved gas analysis. If these gases are increasing, there is probably a leak; with a sealed conservator, there should be little of these gasses in the oil. Nitrogen may be high if the transformer was shipped new filled with nitrogen.

Every 3 to 5 years, (if the conservator has a diaphragm) remove the conservator inspection flange and look inside with a flashlight. If there is a leak, oil will be on top of the diaphragm, and it must be replaced. The new diaphragm material should be nitrile. If the conservator has a bladder and a bladder failure relay, the relay will alarm if the bladder develops a leak. If the conservator has a bladder and does not have a bladder failure relay, inspect the bladder by removing the mounting flange and look inside with a flashlight. If there is oil in the bottom of the bladder, a failure has definitely occurred, and the bladder must be replaced. Follow procedures in the specific transformer instruction manual for draining the conservator and replacement; designs and procedures vary and will not be covered here.

Auxiliary Tank Sealing System. The auxiliary tank sealing system incorporates an extra tank between the main transformer tank and the conservator tank. Inert gas (normally nitrogen) is placed above oil in both the main and middle tanks. Only oil in the top conservator tank is exposed to air. A desiccant air dryer may or may not be included on the breather. As oil in the main tank expands and contracts with temperature, gas pressure varies above the oil in both (figure 13).

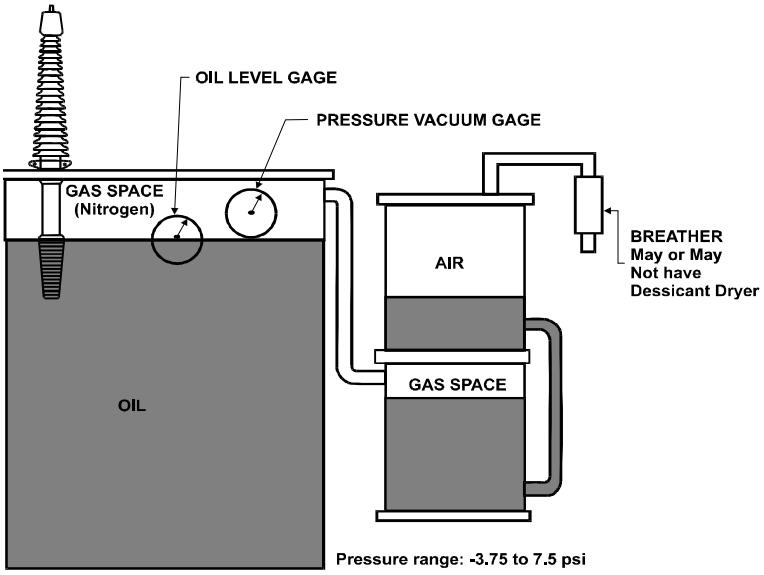

Figure 13.—Auxiliary Sealing System.

Changes in gas pressure causes oil to go back and forth between the middle tank and the conservator. Air containing oxygen and moisture is not in contact with oil in the main transformer tank. Oxygen and moisture are absorbed by oil in the conservator tank and interchanged with oil in the middle one. However, since gas in the middle tank interchanges with gas in the main tank, small amounts of oxygen and moisture carried by gas still make their way into the transformer.

With this arrangement, the conservator does not have to be located above the main tank, which reduces the overall height. If you have one or more of these type transformers without desiccant air dryers, they should be installed.

4.3 Gaskets

Gaskets have several important jobs in sealing systems [6]. A gasket must create a seal and hold it over a long period of time. It must be impervious and not contaminate the insulating fluid or gas above the fluid. It should be easily removed and replaced. It must be elastic enough to flow into imperfections on the sealing surfaces. It must withstand high and low temperatures and remain resilient enough to hold the seal even with joint movement from expansion, contraction, and vibration. It must be resilient enough to not take a "set" even though exposed for a long time to pressure applied with bolt torque and temperature changes. It must have sufficient strength to resist crushing under applied load and resist blowout under system pressure or vacuum. It must maintain its integrity while being handled or installed. If a gasket fails to meet any of these criteria, a leak will result. Gasket leaks result from improper torque, choosing the wrong type gasket material, or the wrong size gasket. Improper sealing surface preparation or the gasket taking a "set" (becoming hard and losing its resilience and elasticity) will also cause a leak. Usually, gaskets take a set as a result of temperature extremes and age.

Sealing (mating) surface preparation: Clean the metal surface thoroughly. Remove all moisture, oil and grease, rust, etc. A wire brush and/or solvent may be required.

Caution: Take extra care that rust and dirt particles never fall into the transformer. The results could be catastrophic, when the transformer is energized.

After rust and scale have been removed, metal surfaces should be coated with Loctite Master gasket No. 518. This material will cure after you bolt up the gasket, so additional glue is not necessary. If the temperature is 50 °F or more, you can bolt up the gasket immediately. This material comes in a kit (part No. 22424) with primer, a tube of material, and instructions. If these instructions are followed, the seal will last many years, and the gasket will be easy to remove later if necessary. If the temperature is under 50 °F, wait about ½ to 1 hour after applying the material to surfaces before bolting. If you are using cork-nitrile or cork-neoprene, you can also

seal gasket surfaces (including the edge of the gasket) with this same material. Loctite makes other sealers that can be used to seal gaskets such as "Hi-tack."

GE glyptol No. 1201B-red can also be used to paint gasket and metal surfaces, but it takes more time and you must be more cautious about temperature. If possible, this work should be done in temperatures above 70 °F to speed paint curing. Allow the paint to completely dry before applying glue or the new gasket. It is not necessary to remove old glyptol or other primer or old glue if the surface is fairly smooth and uniform.

Caution: Most synthetic rubber compounds, including nitrile (Buna N), contain some carbon, which makes it semi-conductive. Take extra care and **never** drop a gasket or pieces of gasket into a transformer tank. The results could be catastrophic when the transformer is energized.

Choose the correct replacement gasket. The main influences on gasket material selection are design of the gasket joint, maximum and minimum operating temperature, type of fluid contained, and internal pressure of the transformer.

Cork-nitrile should be used if the joint does **not** have grooves or limits. This material performs better than cork-neoprene because it does not take a set as easily and conforms better to mating surfaces. It also performs better at higher temperatures. Be extra careful when you store this material because it looks like cork-neoprene (described below), and they easily are mistaken for each other. Compression is the same as for cork-neoprene, about 45%. Cork-nitrile should recover 80% of its thickness with compression of 400 psi in accordance with ASTM F36. Hardness should be 60 to 75 durometer in accordance with ASTM D2240. (See published specifications for E-98 by manufacturer Dodge-Regupol Inc., Lancaster, PA.)

Caution: Cork-nitrile has a shelf life of only about 2 years, so do not order and stock more than can be used during this time.

Cork-Neoprene mixture (called coroprene) can also be used; however, it does not perform as well as cork-nitrile. This material takes a set when it is compressed and should only be used when there are no expansion limiting grooves. Using cork-neoprene in grooves can result in leaks from expansion and contraction of mating surfaces. The material is very porous and should be sealed on both sides and edges with a thin coat of Glyptol No. 1201B red or similar sealer before installing. Glyptol No. 1201B is a slow drying paint used to seal metal flanges and gaskets, and the paint should be allowed to dry totally before installation. Once compressed, this gasket should never be reused. These gaskets should be kept above 35 °F before installation to prevent them from becoming hard. Gaskets should be cut and sealed (painted) indoors at temperatures above 70 °F for ease of handling and to reduce paint curing time. Installing neoprene-cork gaskets when temperatures are at or near freezing should be avoided because the gasket could be damaged and leak. Cork-neoprene gaskets must be evenly compressed about 43 to 45%. For example, if the gasket is ¼-inch thick, 0.43 x 0.25 = 0.10. When the gasket is torqued down, it should be

compressed about 0.10 inch. Or you may subtract 0.1 from ¼ inch to calculate the thickness of the gasket after it is compressed. In this case, ¼ = 0.25 so 0.25 minus 0.10 = 0.15 inch would be the final distance between the mating surfaces after the gasket is compressed. In an emergency, if compression limits are required on this gasket, split lock washers may be used. Bend the washers until they are flat and install enough of them (minium of three), evenly spaced, in the center of the gasket cross section to prevent excessive compression. The thickness of the washers should be such that the gasket compression is limited to approximately 43%, as explained above.

Nitrile "NBR" (Buna N) with 50 to 60 Duro (hardness) is generally the material that should be chosen for most transformer applications.

Caution: Do not confuse this material with Butyl Rubber. Butyl is not a satisfactory material for transformer gaskets. The terms Butyl and Buna are easily confused, and care must be taken to make sure Nitrile (Buna N) is always used and never Butyl.

Replace all cork neoprene gaskets with Nitrile **if the joint has recesses or expansion limiting grooves**. Be careful to protect Nitrile from sunlight; it is not sunlight resistant and will deteriorate, even if only the edges are exposed. It should not be greased when it is used in a nonmovable (static) seal. When joints have to slide during installation or are used as a moveable seal (such as bushing caps, oil cooler isolation valves, and tap changer drive shafts), the gasket or O-ring should be lubricated with a thin coating of DOW No. 111 or No. 714 or equivalent grease. These are very thin and provide a good seal. Nitrile performs better than cork-neoprene; when exposed to higher temperatures, it will perform well up to 65 °C (150 °F).

Viton should be used only for gaskets and O-rings in temperatures higher than 65 °C or for applications requiring motion (shaft seals, etc.). Viton is very tough and wear resistant; however, it is very expensive ($1,000+ per sheet) and should not be used unless it is needed for high wear or high temperature applications. Viton should only be used with compression limiter grooves and recesses. Care should be taken to store Nitrile and Viton separately, or order them in different colors; the materials look alike and can be easily confused, and a much more expensive gasket can be installed unnecessarily. Compression and fill requirements for Viton are the as same as those for nitrile, outlined above and shown in table 1.

Gasket sizing for standard groove depths. Nitrile is chosen as the example because it is the most commonly used material for transformer gasketing. As shown in table 1, nitrile compression should be 25 to 50%. Nitrile sheets are available in 1/16-inch-thick increments.

Gasket thickness is determined by groove depth and standard gasket thickness. Choose the sheet thickness so that one-fourth to one-third of the gasket will protrude above the groove; this is the amount available to be compressed. (See table 2.) Gasket sheets come in standard thicknesses in 1/16-inch increments. Choose one that allows one-third of the gasket to stick out above the groove if you can, but never choose a

Table 1.—Transformer Gasket Application Summary

Gasket Material	Best Temperature Range	Percent Compres -sion	Compatible Fluids	UV Resist	Best Applications
Neoprene (use Nitrile except where there is ultraviolet [UV] exposure) or use Viton	-54 to 60 °C (-65 to 140 °F) not good with temp. swings	30 to 33	Askarels and hydrocarbon fluids	Yes	Use only with compression limits or recesses and use only if UV resistance is needed
Cork-Neoprene (Coroprene) this material takes a set easily	0 to 60 °C (32 to 140 °F)	40	Mineral oil R-Temp Alpha 1	No	Use only for flat to flat surface gaskets with no grooves or compression limits
Cork-Nitrile (best) does not take a set as easily as cork-neoprene	-5 to 60 °C (23 to 140 °F)	40	Mineral oil R-Temp Alpha 1	No	Use only for flat to flat surface gaskets with no grooves or compression limits
Nitrile (Buna N) use this except in high temp., high wear, or UV	-5 to 65 °C (23 to 150 °F)	25 to 50	Mineral oil R-Temp, Alpha 1 Excellent for Hydrocarbon fluids	No	O-rings, flat and extruded gaskets; use with compression limiters or recess only
Viton use for high wear and high temp. applications	-20 to 150 °C (-4 to 302 °F)	30 to 33	Silicone, Alpha 1 Mineral oil	Yes	High temp.; O-rings, flat and extruded gaskets; use with compression limiter groove or recess

Note: Viton O-rings are best for wear resistance and tolerating temperature variations. Nitrile (Buna N) can also be used in low wear applications and temperatures less than 65 °C.

Table 2.—Vertical Groove Compression for Circular Nitrile Gaskets

Standard groove depth (in inches)	Recommended gasket thickness (in inches)	Available to compress (in inches)	Available compression (percent)
3/32	1/8	1/32	25
1/8	3/16	1/16	33
3/16	1/4	1/16	25
1/4	3/8	1/8	33
3/8	1/2	1/8	25

thickness that allows less than one-fourth or as much as one-half to protrude above the groove. Do not try to remove old primer from the groove.

Horizontal groove fill is determined by how wide the groove is. The groove width is equal to the outer diameter (OD) minus the inner diameter (ID) divided by two: $\frac{OD-ID}{2}$. Or just measure the groove width with an accurate caliper.

The width of the groove minus the width of the gasket is the room left for the gasket to expand while being compressed. For nitrile, the amount of horizontal room needed is about 15 to 25%. Therefore, you need to cut the gasket cross section so that it fills about 75 to 85% of the width of the groove.

For example, an 8-inch OD groove with a 6-inch ID, $\frac{OD-ID}{2}$ is $\frac{8-6}{2}$ = 1 inch. Therefore, the width of the groove is 1 inch. Because we have to leave 25% expansion space, the width of the gasket is 75% of 1 inch, or ¾ inch. So that the gasket can expand equally toward the center and toward the outside, you should leave one-half the expansion space at the inner diameter of the groove and one-half at the outer. In this example, there should be a total space of 25% of 1 inch or (¼ inch) for expansion after the gasket is inserted, so you should leave ⅛-inch space at the OD and ⅛-inch space at the ID. See figure 14.

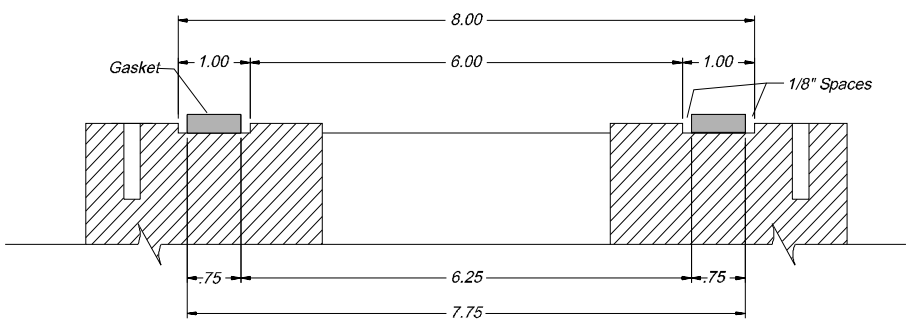

CROSS SECTION OF CIRCULAR GASKET IN GROOVE

Figure 14.—Cross Section of Circular Gasket in Groove.

Always cut the outer diameter first. In this example, the outer diameter would be 8 inches <u>minus</u> ¼ inch, or 7¾ inches.

Note: Since ⅛-inch space is required all around the gasket, ¼ inch must be subtracted to allow⅛ inch on both sides. The inner diameter would be 6 inches <u>plus</u> ¼ inch or 6¼ inches. Note that ¼ inch is <u>subtracted</u> from the OD but <u>added</u> to the ID.

To check yourself, subtract the inner radius from the outer to make sure you get the same gasket width calculated above. In this example, 3⅞-inches (outer radius, ½ of 7¾), minus 3⅛ inches (inner radius, ½ of 6¼), is ¾ inch, which is the correct gasket width.

Rectangular Nitrile Gaskets larger than sheet stock on hand can be fabricated by cutting strips and corners with a table saw or a utility knife with razor blade. Cutting is easier if a little transformer oil or WD-40 oil is applied. Nitrile is also available in spools in standard ribbon sizes. The ends may be joined using a cyanoacrylate

adhesive (super glue). There are many types of this glue; only a few of them work well with nitrile, and they all have a very limited shelf life. Remember to always keep them refrigerated to extend shelf life. The one proven to stand up best to temperature changes and compression is Lawson Rubber Bonder No. 92081. The Lawson part number is 90286, and it is available from Lawson Products Co. in Reno, Nevada, (702-856-1381). Loctite 404 is commonly available at NAPA auto parts stores and works also but does not survive temperature variations as well. Shelf life is critical. A new supply should **always** be obtained when a gasketing job is started; **never** use an old bottle that has been on the shelf since the last job.

When bonding the ends of ribbon together, ends should be cut at an angle (scarfed) at about 15 degrees. The best bond occurs when the length of the angle cut is about four times the thickness of the gasket. With practice, a craftsperson can cut 15-degree scarfs with a utility knife. A jig can also be made from wood to hold the gasket at a 15-degree angle for cutting and sanding. The ends may be further fine-sanded or ground on a fine bench grinder wheel to match perfectly before applying glue. A jig can be fabricated to hold the gasket at 15 degrees while cutting, sanding, or grinding.

Table 3.—Vertical Groove Compression for Rectangular Nitrile Gaskets

Standard groove depth (in inches)	Standard ribbon width (in inches)	Recommended gasket thickness (in inches)	Available to compress (in inches)	Available compression (in inches)
3/32	1/4	1/8	1/32	25
1/8	5/16	3/16	1/16	33
3/16	3/8	1/4	1/16	25
1/4	3/4	3/8	1/8	33
3/8	3/4	1/2	1/8	25

Note: Maximum horizontal fill of the groove should be 75 to 85% as explained above in the circular gasket section. However, it is not necessary to fill the groove fully to 75% to obtain a good seal. Choose the width of ribbon that comes close to, but does not exceed, 75 to 80%. If one standard ribbon width fills only 70% of the groove and the next size standard width fills 90%, choose the size that fills 70%. As in the circular groove explained above, place the gasket so that expansion space is equal on both sides. **The key point is that the cross sectional area of the gasket remains the same as the cover is tightened; the thickness decreases, but the width increases. See below and figure 15.**

Caution: Nitrile (Buna N) is a synthetic rubber compound and, as cover bolts are tightened, the gasket is compressed. Thickness of the gasket is decreased and the

width is increased. If a gasket is too large, rubber will be pressed into the void between the cover and the sealing surface. This will prevent a metal-to-metal seal, and a leak will result. It is best if the cross sectional area of the gasket is a little smaller than the groove cross sectional area. As cover bolts are tightened, the thickness of the gasket decreases but the width increases so that cross sectional area (thickness times the width) remains the same. Care must be taken to ensure that the gasket cross sectional area is **equal to or slightly smaller** (never larger) than the groove cross sectional area. This will provide space for the rubber to expand in the groove so that it will not be forced out into the metal-to-metal contact area. (See figure 15.) If it is forced out into the "metal-to-metal" seal area, a leak generally will be the result. When this happens, our first response is to tighten the bolts, which bends the cover around the gasket material in the metal-to-metal contact area. The leak may stop (or more often not); but the next time the cover is removed, getting a proper seal is almost impossible because the cover is bent. Take extra care sizing the gasket, and these problems won't occur.

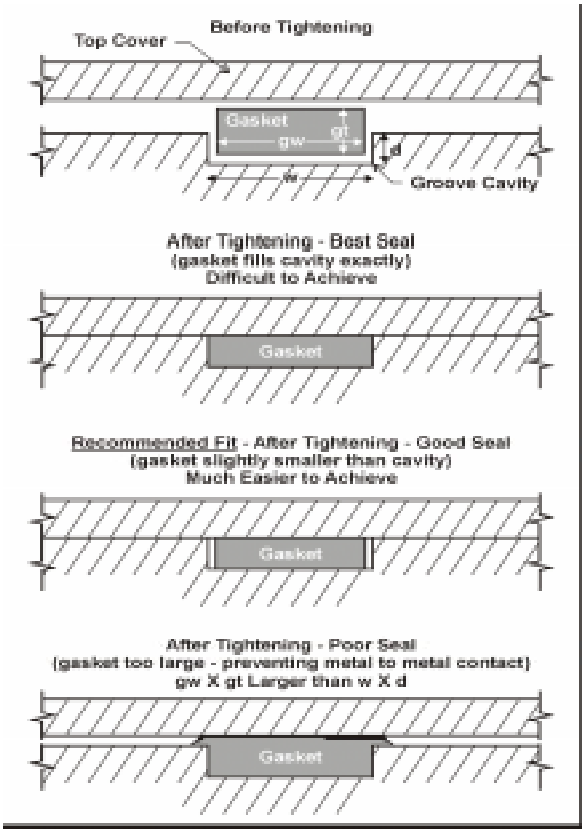

Figure 15.—Cross Section of Gasket Remains Constant Before Tightening and After. w x d = gw x gt

Caution: On some older bushings used on voltages 15 kV and above, it is necessary to install a semiconductive gasket. This type bushing (such as GE type L) has no ground connection between the bottom porcelain skirt flange and the ground ring. The bottom of the skirt is normally painted with a conductive paint, and then a semiconductive gasket is installed. This allows static electric charges to bleed off to ground. The gaskets are typically a semiconductive neoprene material. Sometimes, the gasket will have conductive metal staples near the center to bleed off these charges. When replacing this type gasket, always replace with like material. If like gasket material is not available, use cork-neoprene.

Thin metal conductive shim stock may be folded over the outer perimeter around approximately one-half the circumference. These pieces of shim stock should be evenly spaced around the circumference and stick far enough in toward the center so that they will be held when the bolts are tightened. As an example, if the gasket is 8 inches in diameter, the circumference would be πD or 3.1416 times 8 inches = 25.13 inches in circumference. Fifty percent of 25.13 is about 12½ inches. Cut 12 strips 1-inch wide and long enough to be clamped by the flange top and bottom

when tightened. Fold them over the outside edge of the gasket leaving a little more than 1-inch space between, so that the shim stock pieces will be more or less evenly spaced around the circumference.

Note: Failure to provide a path for static electric charges to get to ground will result in corona discharges between the ground sleeve and the bushing flange. The gasket will be rapidly destroyed, and a leak will be the result.

Bolting sequences to avoid sealing problems: If proper bolt tightening sequences are not followed or improper torque applied to the bolts, sealing problems will result. The resulting problem is illustrated in figure 16. A slight bow in the flange or lid top (exaggerated for illustration) occurs, which applies uneven pressure to the gasket. This bow compromises the seal, and the gasket will eventually leak.

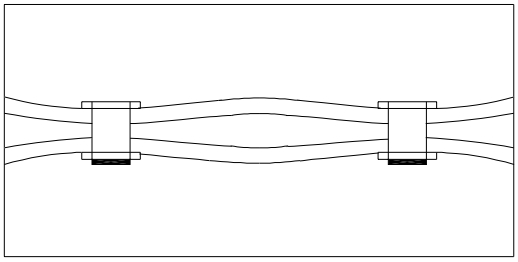

Figure 16.—Bowing at Flanges.

Proper bolting sequences are illustrated for various type flanges/covers in figure 17. Bolt numbers show the correct tightening sequences.

The numbers do not have to be followed exactly; however, the diagonal tightening patterns should be followed. By using proper torque and the illustrated sequence patterns, sealing problems from improper tightening and uneven pressure on the gasket can be avoided. Use a torque wrench and torque bolts according to the head stamp on the bolt. Check manufacturers instruction book for pancake gasket torque values.

4.4 Transformer Oils

4.4.1 Transformer Oil Functions. Transformer oils perform at least four functions for the transformer. Oil provides insulation, provides cooling, and helps extinguish arcs. Oil also dissolves gases generated by oil degradation, moisture and gas from cellulose insulation, deterioration, and gases and moisture from whatever atmosphere the oil is exposed to. Close observation of dissolved gases in the oil, and other oil properties, provides the most valuable information about transformer health. Looking for trends by comparing information provided in several DGAs, and understanding its meaning, is the most important transformer diagnostic tool.

4.4.2 Dissolved Gas Analysis. After 1 month of service and once each year, and more often if a problem is encountered, do a DGA. This is by far the most important tool for determining the health of a transformer.

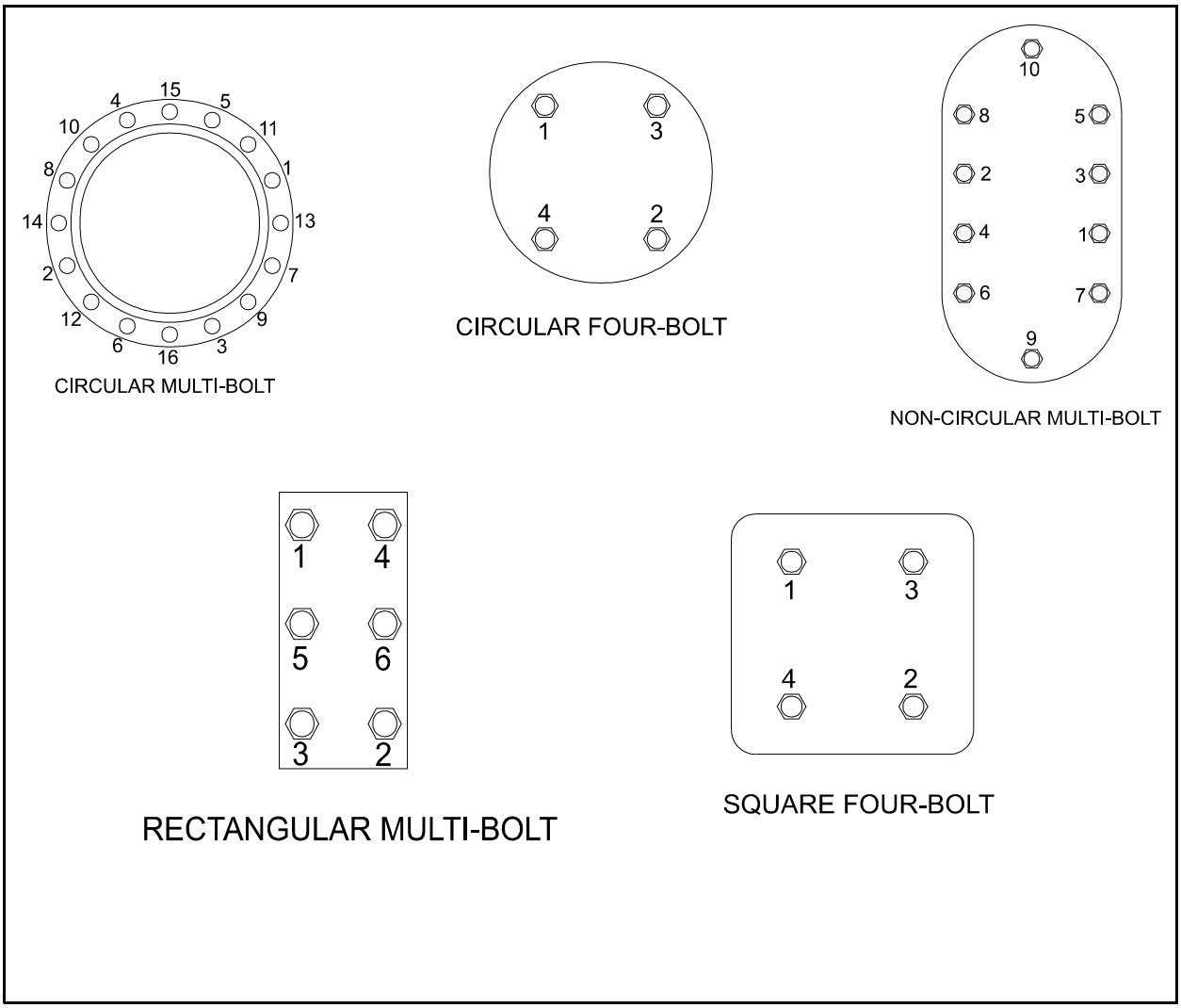

Figure 17.—Bolt Tightening Sequences.

Caution: DGA is unreliable if the transformer is de-energized and has cooled, if the transformer is new, or if it has had less than 1 to 2 weeks of continuous service after oil processing.

The purpose of this section is to provide guidance in interpreting DGA and to suggest actions based on the analysis. There are no "quick and sure" easy answers when dealing with transformers. Transformers are very complex, very expensive, and very important to Reclamation; and each one is different. Decisions must be based on experienced judgment founded on all available data and consultation with experienced people. Along with thorough periodic inspections covered earlier, the most important key to transformer life is periodic DGA and proper interpretation. Each DGA must be compared to prior DGAs so that trends can be recognized and rates of gas generation established.

Although examples will be presented later, there is no universally accepted means for interpreting DGA [15]. Transformers are very complex. Aging, chemical actions and reactions, electric fields, magnetic fields, thermal contraction and expansion, load variations, gravity, and other forces all interact inside the tank. Externally, through-faults, voltage surges, wide ambient temperature changes, and other forces such as the earth's magnetic field and gravity affect the transformer. There are few if any "cut and dried" DGA interpretations; even experts disagree. Consultation with others, experience, study, comparing earlier DGA's, keeping accurate records of a transformer's history, and noting information found when a transformer is disassembled will increase expertise and provide life extension to this critical equipment.

Keeping accurate records of each individual transformer is paramount. If a prior through-fault, overload, cooling problem, or nearby lightning strike has occurred, this information is extremely valuable when trying to determine what is going on inside the transformer. Baseline transformer test information should be established when the transformer is new or as soon as possible thereafter. This must include DGA, Doble, and other test results, discussed in the testing section, "4.7 Transformer Testing."

4.4.3 Key Gas Method of interpreting DGA is set forth in IEEE [11]. Key gases formed by degradation of oil and paper insulation are hydrogen (H_2), methane (CH_4), ethane ($C_2 H_6$), ethylene ($C_2 H_4$), acetylene ($C_2 H_2$), carbon monoxide (CO), and oxygen (O_2). Except for carbon monoxide and oxygen, all these gases are formed from the degradation of the oil itself. Carbon monoxide, carbon dioxide (CO_2), and oxygen are formed from degradation of cellulose (paper) insulation. Carbon dioxide, oxygen, nitrogen (N_2), and moisture can also be absorbed from the air if there is a oil/air interface, or if there is a leak in the tank. Some of our transformers have a pressurized nitrogen blanket above the oil and, in these cases, nitrogen may be near saturation. (See table 4.) Gas type and amounts are determined by where the fault occurs in the transformer and the severity and energy of the event. Events range from low energy events such as partial discharge, which produces hydrogen and trace amounts of methane and ethane, to very high energy sustained arcing, capable of generating all the gases including acetylene, which requires the most energy.

4.4.4 Transformer Diagnosis Using Individual and Total Dissolved Key Gas Concentrations. A four-condition, DGA guide to classify risks to transformers with no previous problems has been developed by the IEEE [11]. The guide uses combinations of individual gases and total combustible gas concentration. This guide is not universally accepted and is only one of the tools used to evaluate transformers. The four conditions are defined below:

Condition 1: Total dissolved combustible gas (TDCG) below this level indicates the transformer is operating satisfactorily. Any individual combustible gas exceeding specified levels in table 4 should have additional investigation.

Table 4.—Dissolved Key Gas Concentration Limits in Parts Per Million (ppm)

Status	H_2	CH_4	C_2H_2	C_2H_4	C_2H_6	CO	CO_2[1]	TDCG
Condition 1	100	120	35	50	65	350	2,500	720
Condition 2	101-700	121-400	36-50	51-100	66-100	351-570	2,500-4,000	721-1,920
Condition 3	701-1,800	401-1,000	51-80	101-200	101-150	571-1,400	4,001-10,000	1,921-4,630
Condition 4	>1,800	>1,000	>80	>200	>150	>1,400	>10,000	>4,630

[1] CO_2 is not included in adding the numbers for TDCG because it is not a combustible gas.

Condition 2: TDCG within this range indicates greater than normal combustible gas level. Any individual combustible gas exceeding specified levels in table 4 should have additional investigation. A fault may be present. Take DGA samples at least often enough to calculate the amount of gas generation per day for each gas. (See table 5 for recommended sampling frequency and actions.)

Condition 3: TDCG within this range indicates a high level of decomposition of cellulose insulation and/or oil. Any individual combustible gas exceeding specified levels in table 4 should have additional investigation. A fault or faults are probably present. Take DGA samples at least often enough to calculate the amount of gas generation per day for each gas. (See table 5.)

Condition 4: TDCG within this range indicates excessive decomposition of cellulose insulation and/or oil. Continued operation could result in failure of the transformer (table 5).

Condition numbers for dissolved gases given in IEEE C-57-104-1991 (table 4) are extremely conservative. We have transformers that have operated safely with individual gases in Condition 4 with no problems; however, they are stable and gases are not increasing, or are increasing very slowly. If TDCG and individual gases are increasing significantly (more than 30 ppm/day), the fault is active and the transformer should be de-energized when Condition 4 levels are reached.

A sudden increase in key gases and the rate of gas production is more important in evaluating a transformer than the amount of gas. One exception is acetylene (C_2H_2). The generation of any amount of this gas above a few ppm indicates high energy arcing. Trace amounts (a few ppm) can be generated by a very hot thermal fault (500 °C). A one-time arc caused by a nearby lightning strike or a high-voltage surge can generate acetylene. If C_2H_2 is found in the DGA, oil samples should be taken weekly to determine if additional acetylene is being generated. If no additional acetylene is found and the level is below the IEEE Condition 4, the transformer may continue in service. However, if acetylene continues to increase, the transformer has an active high energy

Table 5.—Actions Based on Dissolved Combustible Gas

Conditions	TDCG Level or Highest Individual Gas (See Table 4)	TDCG Generation Rates (PPM/Day)	Sampling Intervals and Operating Actions for Gas Generation Rates	
			Sampling Interval	Operating Procedures
Condition 1	≤720 ppm of TDCG or highest condition based on individual gas from table 4	<10	Annually: 6mo for EHV trans	Continue normal operation.
		10-30	Quarterly	
		>30	Monthly	Exercise caution. Analyze individual gases to find cause. Determine load dependence.
Condition 2	721-1,920 ppm of TDCG or highest condition based on individual gas from table 4	<10	Quarterly	Exercise caution. Analyze individual gases to find cause. Determine load dependence.
		10-30	Monthly	
		>30	Monthly	
Condition 3	1,941-2,630 ppm of TDCG or highest condition based on individual gas from table 4	<10	Monthly	Exercise extreme caution. Analyze individual gases to find cause. Plan outage. Call manufacturer and other consultants for advice.
		10-30	Weekly	
		>30	Weekly	
Condition 4	>4,630 ppm of TDCG or highest condition based on individual gas from table 4	<10	Weekly	Exercise extreme caution. Analyze individual gases to find cause. Plan outage. Call manufacturer and other consultants for advice.
		10-30	Daily	
		>30	Daily	Consider removal from service. Call manufacturer and other consultants for advice.

NOTES: 1. Either the **Highest Condition Based on Individual Gas** or **Total Dissolved Combustible Gas** can determine the condition (1,2,3, or 4) of the transformer [11]. For example, if the TDCG is between 1,941 ppm and 2,630 ppm, this indicates Condition 3. However ,if hydrogen is greater than 1,800 ppm, the transformer is in Condition 4, as shown in table 4..
2. When the table says "determine load dependence," this means, if possible, find out if the gas generation rate in ppm/day goes up and down with load. Perhaps the transformer is overloaded. Take oil samples every time the load changes; if load changes are too frequent, this may not be possible.
3. To get TDCG generation rate, divide the change in TDCG by the number of days between samples that the transformer has been loaded. Down-days should not be included. The individual gas generation rate ppm/day is determined by the same method.

internal arc and should be taken out of service. Further operation is extremely hazardous and may result in catastrophic failure. Operating a transformer with an active high energy arc is extremely hazardous.

Table 4 assumes that no previous DGA tests have been made on the transformer or that no **recent** history exists. If a previous DGA exists, it should be reviewed to determine if the situation is stable (gases are not increasing significantly) or unstable (gases are increasing significantly). **Deciding whether gases are increasing *significantly* depends on your particular transformer.**

Compare the current DGA to older DGAs. If the production rate (ppm/day) of any one of the key gases and/or TDCG (ppm) has suddenly gone up, gases are probably increasing significantly. Refer to table 5, which gives suggested actions based on total amount of gas in ppm and rate of gas production in ppm/day.

Before going to table 5, determine transformer status from table 4; that is, look at the DGA and see if the transformer is in Condition 1, 2, 3, or 4. The condition for a particular transformer is determined by finding the highest level for any **individual gas** or by using the **TDCG [11]. Either** the individual gas or the TDCG can give the transformer a higher Condition number, which means it is at greater risk. If the TDCG number shows the transformer in Condition 3 and an individual gas shows the transformer in Condition 4, the transformer is in Condition 4. Always be conservative and assume the worst until proven otherwise.

Sampling intervals and recommended actions. When sudden increases occur in dissolved gases, the procedures recommended in table 5 should be followed. Table 5 is **paraphrased** from table 3 in IEEE C57.104-1991. To make it easier to read, the order has been reversed with Condition 1 (lowest risk transformer) at the top and Condition 4 (highest risk) at the bottom. The table indicates the recommended sampling intervals and actions for various levels of TDCG in ppm. **An increasing gas generation rate indicates a problem of *increasing severity*;** therefore, as the generation rate (ppm/day) increases, a shorter sampling interval is recommended. (See table 5.)

Some information has been added to the table from IEEE C57-104-1991; that is, inferred from the text. To see the exact table, refer to the IEEE Standard.

If it can be determined what is causing gassing and the risk can be assessed, the sampling interval may be extended. For example, if the core is tested with a megohmmeter and an additional core ground is found, even though table 5 may recommend a monthly sampling interval, an operator may choose to lengthen the sampling interval, because the source of the gassing and generation rate is known.

A decision should never be made on the basis of just one DGA. It is very easy to contaminate the sample by accidentally exposing it to air. Mislabeling a sample is also a common cause of error. Mislabeling could occur when the sample is taken, or it could be accidentally contaminated or mishandled at the laboratory. Mishandling may allow some gases to escape to the atmosphere and other gases, such as oxygen, nitrogen, and carbon dioxide, to migrate from the atmosphere into the sample. **If you notice a transformer problem from the DGA, the first thing to do is take another sample for comparison.**

In the gas generation chart (figure 18) [13, 16] and discussion below, please note that temperatures at which gases form are only approximate. The figure is not drawn to scale and is only for purposes of illustrating temperature relationships, gas types, and quantities. These relationships represent what generally has been proven in controlled laboratory conditions using a mass

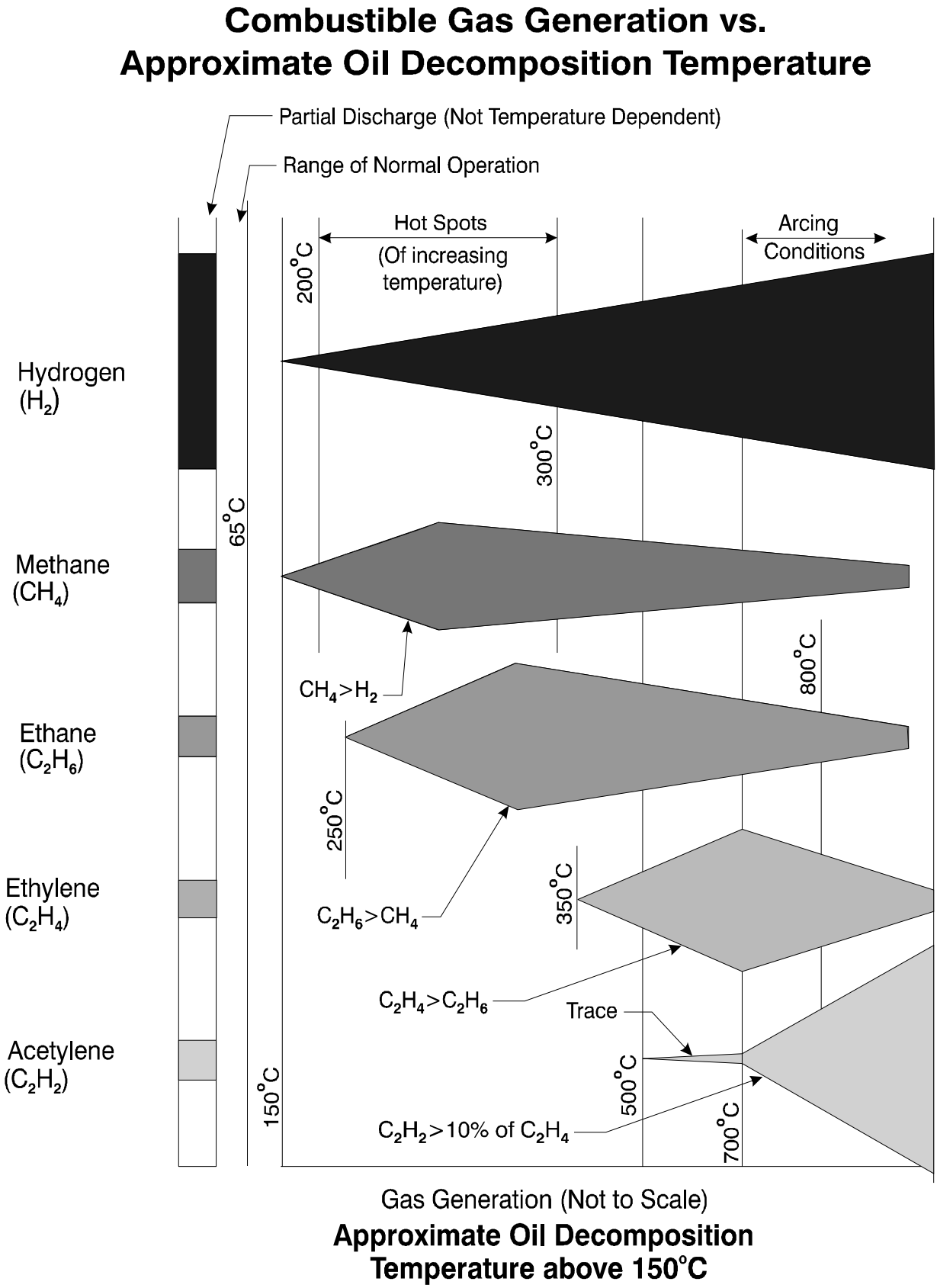

Figure 18.—Combustible Gas Generation Versus Temperature.

spectrometer. This chart was used by R.R. Rogers of the Central Electric Generating Board (CEGB) of England to develop the "Rogers Ratio Method" of analyzing transformers (discussed later).

A vertical band at left shows what gases and approximate relative quantities are produced under partial discharge conditions. Note that all the gases are given off, but in much less quantity than hydrogen. It takes only a very low energy event (partial discharge/corona) to cause hydrogen molecules to form from the oil.

Gases are formed inside an oil-filled transformer similar to a petroleum refinery still, in that various gases begin forming at specific temperatures. From the Gas Generation Chart, we can see relative amounts of gas as well as approximate temperatures. Hydrogen and methane begin to form in small amounts around 150 °C. Notice from the chart that beyond maximum points, methane (CH_4), ethane and ethylene production goes down as temperature increases. At about 250°C, production of ethane (C_2H_6) starts. At about 350 °C, production of ethylene (C_2H_4) begins. Acetylene (C_2H_2) starts between 500 °C and 700 °C. In the past, the presence of only trace amounts of acetylene (C_2H_2) was considered to indicate a temperature of at least 700 °C had occurred; however, recent discoveries have led to the conclusion that a thermal fault (hot spot) of 500 °C can produce trace amounts (a few ppm). Larger amounts of acetylene can only be produced above 700 °C by internal arcing. Notice that between 200 °C and 300 °C, the production of methane exceeds hydrogen. Starting about 275 °C and on up, the production of ethane exceeds methane. At about 450°C, hydrogen production exceeds all others until about 750 °C to 800 °C; then more acetylene is produced.

It should be noted that small amounts of H_2, CH_4, and CO are produced by normal aging. Thermal decomposition of oil-impregnated cellulose produces CO, CO_2, H_2, CH_4, and O_2. Decomposition of cellulose insulation begins at only about 100 °C or less. Therefore, operation of transformers at no more than 90 °C is imperative. Faults will produce internal "hot spots" of far higher temperatures than these, and the resultant gases show up in the DGA.

Table 6 is a chart of "fault types," parts of which are paraphrased from the International Electrotechnical Commission (IEC 60599) [12]. This chart is not complete. It is impossible to chart every cause and effect due to the extreme complexity of transformers. DGA must be carefully examined with the idea of determining possible faults and possible courses of action. These decisions are based on judgment and experience and are seldom "cut and dried." Most professional associations agree that there are two basic fault types, thermal and electrical. The first three on the chart are electrical discharges, and the last three are thermal faults.

Ethane and ethylene are sometimes called "hot metal gases." When these gases are being generated and acetylene is not, the problem found inside the transformer normally involves hot metal. This may include bad contacts on the tap changer or a bad connection somewhere in the circuit, such as a main transformer lead. Stray flux impinging on the tank (such as in Westinghouse 7M series transformers) can cause these "hot metal gases." A shield has been known

to become loose and fall and become ungrounded. Static can then build up and discharge to a grounded surface and produce "hot metal" gases. An unintentional core ground with circulating currents can also produce these gases. There are many other examples.

Notice that both type faults (thermal and electrical) may be occurring at once, and one may cause the other. The associations do not mention magnetic faults; however, magnetic faults (such as stray magnetic flux impinging the steel tank or other magnetic structures) also cause hot spots.

Atmospheric gasses (N_2, CO_2, and O_2) can be very valuable in a DGA in revealing a possible leak. However, as mentioned elsewhere, there are other reasons these gases are found in DGA. Nitrogen may have come from shipping the transformer with N_2 inside or from a nitrogen blanket. CO_2 and O_2 are formed by degradation of cellulose. Be very careful; look at several DGAs, and see if atmospheric gases and possibly moisture levels are increasing. Also look at the transformer carefully if you can find an oil leak. Moisture and atmospheric gases will leak inside when the transformer is off and ambient temperature drops. (See section 4.3 on moisture)

Dissolved gas software. Several companies offer DGA computer software that diagnose transformer problems. These diagnoses must be used with engineering judgment and should never be taken at face value. The software is constantly changing. The Technical Service Center uses " Transformer Oil Analyst" (TOA) by Delta x Research. This software uses a composite of several current DGA methods. Dissolved gas analysis help is available from the TSC at D-8440 and D8450. Both groups have the above software and experience in diagnosing transformer problems.

One set of rules that TOA uses to generate alarms is based loosely on IEC 60599 (table 6). These rules are also very useful in daily dissolved gas analysis. They are based on L1 limits of IEC 60599 except for acetylene. IEC 60599 gives a range for L1 limits instead of a specific value. TOA uses the average in this range and then gives the user a "heads up" if a generation rate exceeds 10% of L1 limits per month. Acetylene is the exception; IEEE sets an L1 limit of 35 ppm (too high), and IEC sets acetylene range at 3 to 50. TOA picks the lowest number (3 ppm) and sets the generation rate alarm value at 3 ppm per month.

Notes: If one or more gas generation rates are equal to or exceed G1 limits (10% of L1 limits per month), you should begin to pay more attention to this transformer. Reduce the DGA sample interval, reduce loading, plan for future outage, contact the manufacturer etc.

If one or more combustible gas generation rates are equal to or exceed G2 limits (50% of L1 limits per month), this transformer should be considered in critical condition. You may want to reduce sample intervals to monthly or weekly, plan an outage, plan to rebuild or replace the transformer, etc. If an active arc is

Table 6.—TOA L1 Limits and Generation Rate Per Month Alarm Limits

GAS	L1 Limits	G1 Limits (ppm per month)	G2 Limits (ppm per month)
H_2	100	10	50
CH_4	75	8	38
C_2H_2	3	3	3
C_2H_4	75	8	38
C_2H_6	75	8	38
CO	700	70	350
CO_2	7,000	700	3,500

present (C_2H_2 generation), or if other heat gases are high (above Condition 4 limits in table 4), and G2 limits are exceeded, the transformer should be removed from service.

Table 7 is taken from IEC 60599 of key gases, possible faults, and possible findings. This chart is not all inclusive and should be used with other information. Additional possible faults are listed on following and preceding pages.

Transformers are so complex that it is impossible to put all symptoms and causes into a chart. Several additional transformer problems are listed below; there are many others.

1. Gases are generated by normal operation and aging, mostly H_2 and CO with some CH_4.

2. Operating transformers at sustained overload will generate combustible gases.

3. Problems with cooling systems, discussed in an earlier section, can cause overheating.

4. A blocked oil duct inside the transformer can cause local overheating, generating gases.

5. An oil directing baffle loose inside the transformer causes mis-direction of cooling oil.

6. Oil circulating pump problems (bearing wear, impeller loose or worn) can cause transformer cooling problems.

7. Oil level is too low; this will not be obvious if the level indicator is inoperative.

8. Sludge in the transformer and cooling system. (See “3. Transformer Cooling Methods.”)

Table 7.—Fault Types

Key Gases	Possible Faults	Possible Findings
H_2, possible trace of CH_4 and C_2H_6. Possible CO.	Partial discharges (corona)	Weakened insulation from aging and electrical stress.
H_2, CH_4, (some CO if discharges involve paper insulation). Possible trace amounts of C_2H_6.	Low energy discharges (sparking). (May be static discharges)	Pinhole punctures in paper insulation with carbon and carbon tracking. Possible carbon particles in oil. Possible loose shield, poor grounding of metal objects
H_2, CH_4, C_2H_6, C_2H_4, and the key gas for arcing C_2H_2 will be present perhaps in large amounts. If C_2H_2 is being generated, arcing is still going on. CO will be present if paper is being heated.	High energy discharges (arcing)	Metal fusion, (poor contacts in tap changer or lead connections). Weakened insulation, from aging and electrical stress. Carbonized oil. Paper destruction if it is in the arc path or overheated.
H_2, CO.	Thermal fault less than 300 °C in an area close to paper insulation (paper is being heated).	Discoloration of paper insulation. Overloading and or cooling problem. Bad connection in leads or tap changer. Stray current path and/or stray magnetic flux.
H_2, CO, CH_4, C_2H_6, C_2H_4.	Thermal fault between 300 °C and 700 °C	Paper insulation destroyed. Oil heavily carbonized.
All the above gases and acetylene in large amounts.	High energy electrical arcing 700 °C and above.	Same as above with metal discoloration. Arcing may have caused a thermal fault.

9. Circulating stray currents may occur in the core, structure, and/or tank.

10. An unintentional core ground may cause heating by providing a path for stray currents.

11. A hot-spot can be caused by a bad connection in the leads or by a poor contact in the tap changer.

12. A hot-spot may also be caused by discharges of static electrical charges that build up on shields or core and structures which are not properly grounded.

13. Hot-spots may be caused by electrical arcing between windings and ground, between windings of different potential, or in areas of different potential on the same winding, due to deteriorated or damaged insulation.

14. Windings and insulation can be damaged by faults downstream (through faults), causing large current surges through the windings. Through faults cause extreme magnetic and physical forces that can distort and loosen windings and

wedges. The result may be arcing in the transformer, beginning at the time of the fault, or the insulation may be weakened and arcing develop later.

15. Insulation can also be damaged by a voltage surge such as a nearby lightning strike or switching surge or closing out of step, which may result in immediate arcing or arcing that develops later.

16. Insulation may be deteriorated from age and simply worn out. Clearances and dielectric strength are reduced, allowing partial discharges and arcing to develop. This can also reduce physical strength allowing wedging and windings to move extensively during a through-fault, causing total mechanical and electrical failure.

17. High noise level (hum due to loose windings) can generate gas due to heat from friction. Compare the noise to sister transformers, if possible. Sound level meters are available at the TSC for diagnostic comparison and to establish baseline noise levels for future comparison.

Temperature. Gas production rates increase exponentially with temperature, and directly with volume of oil and paper insulation at high enough temperature to produce gases [11]. Temperature decreases as distance from the fault increases. Temperature at the fault center is highest, and oil and paper here will produce the most gas. As distance increases from the fault (hot spot), temperature goes down and the rate of gas generation also goes down. Because of the volume effect, a large heated volume of oil and paper will produce the same amount of gas as a smaller volume at a higher temperature [11]. We cannot tell the difference by looking at the DGA. This is one reason that interpreting DGAs is not an exact science.

Gas Mixing. Concentration of gases in close proximity to an active fault will be higher than in the DGA oil sample. As distance increases from a fault, gas concentrations decrease. Equal mixing of dissolved gases in the total volume of oil depends on time and oil circulation. If there are no pumps to force oil through radiators, complete mixing of gases in the total oil volume takes longer. With pumping and normal loading, complete mixing equilibrium should be reached within 24 hours and will have little effect on DGA if an oil sample is taken 24 hours or more after a problem begins.

Gas Solubility. Solubilities of gases in oil vary with temperature and pressure [13]. Solubility of all transformer gases vary proportionally up and down with **pressure**. Variation of solubilities with **temperature** is much more complex. Solubilities of hydrogen, nitrogen, carbon monoxide, and oxygen go up and down proportionally with temperature. Solubilities of carbon dioxide, acetylene, ethylene, and ethane are reversed and vary inversely with temperature changes. As temperature **rises**, solubilities of these gases go down; and as temperature **falls**, their solubilities increase. Methane solubility remains almost constant with temperature changes. Table 7 is accurate only at **standard temperature and pressure (STP), (25 °C/77 °F) and (14.7 psi/29.93 inches of mercury, which is standard barometric pressure at sea level)**. Table 8 shows only relative differences in how gases dissolve in transformer oil.

From the solubility table 8 below, comparing hydrogen with a solubility of 7% and acetylene with solubility of 400%, you can see that transformer oil has a much greater capacity for dissolving acetylene. However, 7% hydrogen by volume represents 70,000 ppm, and 400% acetylene represents 4,000,000 ppm. You will probably never see a DGA with numbers this high. Nitrogen can approach maximum level if there is a pressurized nitrogen blanket above the oil. Table 8 shows the **maximum** amount of each gas that the oil is capable of dissolving at standard temperature and pressure. At these levels, the oil is said to be saturated.

Table 8.—Dissolved Gas Solubility in Transformer Oil Accurate Only at STP, 25 °C (77 °F) and 14.7 psi (29.93 inches of mercury)

Dissolved Gas	Formula	Solubility in Transformer Oil (% by Volume)	Equivalent (ppm by Volume)	Primary Causes/Sources
Hydrogen[1]	H_2	7.0	70,000	Partial discharge, corona, electrolysis of H_2O
Nitrogen	N_2	8.6	86,000	Inert gas blanket, atmosphere
Carbon Monoxide[1]	CO	9.0	90,000	Overheated cellulose, air pollution
Oxygen	O_2	16.0	160,000	Atmosphere
Methane[1]	CH_4	30.0	300,000	Overheated oil
Carbon Dioxide	CO_2	120.0	1,200,00	Overheated cellulose, atmosphere
Ethane[1]	C_2H_6	280.0	2,800,00	Overheated oil
Ethylene[1]	C_2H_4	280.0	2,800,000	Very overheated oil
Acetylene[1]	C_2H_2	400.0	4,000,000	Arcing in oil

[1] Denotes combustible gas. Overheating can be caused both by high temperatures and by unusual or abnormal electrical stress.

If you have conservator-type transformers and nitrogen, oxygen, and CO_2 are increasing, there is a good possibility the tank has a leak, or the oil may have been poorly processed. Check the diaphragm or bladder for leaks (section 4.2), and check for oily residue around the pressure relief device and other gasketed openings. There should be fairly low nitrogen and especially low oxygen in a conservator-type transformer. However, if the transformer was shipped new with pressurized nitrogen inside and has not been degassed properly, there may be high nitrogen content in the DGA, **but the nitrogen level should not be increasing** after the transformer has been in service for a few years. When oil is being installed in a new transformer, a vacuum is placed on the tank which pulls out nitrogen and pulls in the oil. Oil is free to absorb nitrogen at the oil/gas interface, and some nitrogen may be trapped in the windings, paper insulation, and structure. In this case, nitrogen may be fairly high in the DGAs. However, oxygen should be very low, and nitrogen should not be increasing. It is important to take an oil sample early in the

transformer's service life to establish a baseline DGA; **then take samples at least annually.** The nitrogen and oxygen can be compared with earlier DGAs; and if they increase, it is a good indication of a leak. If the transformer oil has ever been de-gassed, nitrogen and oxygen should be low in the DGA. It is extremely important to keep accurate records over a transformer's life; when a problem occurs, recorded information helps greatly in troubleshooting.

4.4.5 Rogers Ratio Method of DGA. Rogers Ratio Method of DGA [18] is an additional tool that may be used to look at dissolved gases in transformer oil. Rogers Ratio Method compares quantities of different key gases by dividing one into the other. This gives a ratio of the amount of one key gas to another. By looking at the Gas Generation Chart (figure 18), you can see that, at certain temperatures, one gas will be generated more than another gas. Rogers used these relationships and determined that if a certain ratio existed, then a specific temperature had been reached. By comparing a large number of transformers with similar gas ratios and data found when the transformers were examined, Rogers could then say that certain faults were present. Like the Key Gas Analysis above, this method is not a "sure thing" and is only an additional tool to use in analyzing transformer problems. Rogers Ratio Method, using three-key gas ratios, is based on earlier work by Doerneburg, who used five-key gas ratios. Ratio methods are only valid if a significant amount of the gases used in the ratio is present. A good rule is: **Never make a decision based only on a ratio if either of the two gases used in a ratio is less than 10 times the amount the gas chromatograph can detect (12).** (Ten times the individual gas detection limits are shown in table 9 and below.) This rule makes sure that instrument inaccuracies have little effect on the ratios. If either of the gases are lower than 10 times the detection limit, you most likely do not have the particular problem that this ratio deals with anyway. If the gases are not at least 10 times these limits, this does not mean you cannot use the Rogers Ratios; it means that the results are not as certain as if the gases were at least at these levels. This is another reminder that DGAs are not an exact science and there is no "one best easy way" to analyze transformer problems. Approximate detection limits are as follows, depending on the lab and equipment:

Dissolved Gas Analysis Detection Limits.

Hydrogen (H_2) about 5 ppm
Methane (CH_4) about 1 ppm
Acetylene (C_2H_2) about 1 to 2 ppm
Ethylene (C_2H_4) about 1 ppm
Ethane (C_2H_6) about 1 ppm
Carbon monoxide (CO) and carbon cioxide (CO_2) about 25 ppm
Oxygen (O_2) and nitrogen (N_2) about 50 ppm

When a fault occurs inside a transformer, there is no problem with minium gas amounts at which the ratio are valid. There will be more than enough gas present.

If a transformer has been operating normally for some time and a DGA shows a sudden increase in the amount of gas, the first thing to do is take a second sample to verify there is a problem. Oil samples are easily contaminated during sampling or at the lab. If the next DGA shows gases to be more in line with prior DGAs, the earlier oil sample was contaminated, and there is no further cause for concern. If the second sample also shows increases in gases, the problem is real. To apply Ratio Methods, it helps to subtract gases that were present prior to sudden gas increases. This takes out gases that have been generated up to this point due to normal aging and from prior problems. This is especially true for ratios using H_2 and the cellulose insulation gases CO and CO_2 [12]. These are generated by normal aging.

Rogers Ratio Method Uses the Following Three Ratios.

$$C_2H_2/C_2H_4, \quad CH_4/H_2, \quad C_2H_4/C_2H_6$$

These ratios and the resultant fault indications are based on large numbers of DGAs and transformer failures and what was discovered after the failures.

There are other ratio methods, but only the Rogers Ratio Method will be discussed since it is the one most commonly used. The method description is paraphrased from Rogers' original paper [18] and from IEC 60599 [12].

Caution: Rogers Ratio Method is for **fault analyzing, not for fault detection**. You **must have already decided** that you have a problem from the total amount of gas (using IEEE limits) or increased gas generation rates. Rogers Ratios will only give you an indication of what the problem is; it **cannot** tell you whether or not you have a problem. If you already suspect a problem based on total combustible gas levels or increased rate-of-generation, then you will normally already have enough gas for this method to work. A good system to determine whether you have a problem is to use table 5 in the Key Gas Method. If two or more of the key gases are in condition two and the gas generation is at least 10% per month of the L1 limit, you have a problem. Also, for the diagnosis to be valid, gases used in ratios should be at least 10 times the detection limits given earlier. The more gas you have, the more likely the Rogers Ratio Method will give a valid diagnosis. The reverse is also true; the less gas you have, the less likely the diagnosis will be valid. If a gas used in the denominator of any ratio is zero, or is shown in the DGA as not detected (ND), use the detection limit of that particular gas as the denominator. This gives a reasonable ratio to use in diagnostic table 9. Zero codes mean that you do not have a problem in this area.

Table 9.—Rogers Ratios for Key Gases

Code range of ratios		$\frac{C_2H_2}{C_2H_4}$	$\frac{CH_4}{H_2}$	$\frac{C_2H_4}{C_2H_6}$	Detection limits and 10 x detection limits are shown below: C_2H_2 1 ppm 10 ppm C_2H_4 1 ppm 10 ppm CH_4 1 ppm 10 ppm H_2 5 ppm 50 ppm C_2H_6 1 ppm 10 ppm
<0.1		0	1	0	
0.1-1		1	0	0	
1-3		1	2	1	
>3		2	2	2	
Case	Fault Type				Problems Found
0	No fault	0	0	0	Normal aging
1	Low energy partial discharge	1	1	0	Electric discharges in bubbles, caused by insulation voids or super gas saturation in oil or cavitation (from pumps) or high moisture in oil (water vapor bubbles).
2	High energy partial discharge	1	1	0	Same as above but leading to tracking or perforation of solid cellulose insulation by sparking, or arcing; this generally produces CO and CO_2.
3	Low energy discharges, sparking, arcing	1-2	0	1-2	Continuous sparking in oil between bad connections of different potential or to floating potential (poorly grounded shield etc); breakdown of oil dielectric between solid insulation materials.
4	High energy discharges, arcing	1	0	2	Discharges (arcing) with power follow through; arcing breakdown of oil between windings or coils, or between coils and ground, or load tap changer arcing across the contacts during switching with the oil leaking into the main tank.
5	Thermal fault less than 150 °C (see note 2)	0	0	1	Insulated conductor overheating; this generally produces CO and CO_2 because this type of fault generally involves cellulose insulation.
6	Thermal fault temp. range 150-300 °C (see note 3)	0	2	0	Spot overheating in the core due to flux concentrations. Items below are in order of increasing temperatures of hot spots. Small hot spots in core. Shorted laminations in core. Overheating of copper conductor from eddy currents. Bad connection on winding to incoming lead, or bad contacts on load or no-load tap changer. Circulating currents in core; this could be an extra core ground, (circulating currents in the tank and core); this could also mean stray flux in the tank. These problems may involve cellulose insulation which will produce CO and CO_2.
7	Thermal fault temp. range 300-700 °C	0	2	1	
8	Thermal fault temp. range over 700 °C (see note 4)	0	2	2	

Notes: 1. There will be a tendency for ratio C_2H_2 /C_2H_4 to rise from 0.1 to above 3 and the ratio C_2H_4 /C_2H_6 to rise from 1-3 to above 3 as the spark increases in intensity. The code at the beginning stage will then be 1 0 1.
2. These gases come mainly from the decomposition of the cellulose which explains the zeros in this code.
3. This fault condition is normally indicated by increasing gas concentrations. CH_4 /H_2 is normally about 1, the actual value above or below 1, is dependent on many factors such as the oil preservation system (conservator, N_2 blanket, etc.), the oil temperature, and oil quality.
4. Increasing values of C_2H_2 (more than trace amounts), generally indicates a hot spot higher than 700 °C. This generally indicates arcing in the transformer. If acetylene is increasing and especially if the generation rate is increasing, the transformer should be de-energized, further operation is extremely hazardous.

General Remarks:

1. Values quoted for ratios should be regarded as typical (not absolute). This means that the ratio numbers are not “carved in stone”; there may be transformers with the same problems whose ratio numbers fall outside the ratios shown at the top of the table.

2. Combinations of ratios not included in the above codes may occur in the field. If this occurs, the Rogers Ratio Method will not work for analyzing these cases.

3. Transformers with on-load tap changers may indicate faults of code type 2 0 2 or 1 0 2 depending on the amount of oil interchange between the tap changer tank and the main tank.

Example 1

Example of a Reclamation transformer DGA:

Hydrogen (H_2)	9 ppm
Methane (CH_4)	60
Ethane (C_2H_6)	53
Ethylene (C_2H_4)	368
Acetylene (C_2H_2)	3
Carbon Monoxide (CO)	7
Carbon Dioxide (CO_2)	361
Nitrogen (N_2)	86,027
Oxygen (O_2)	1,177
TDCG	500

Rogers Ratio Analysis

	Code
C_2H_2/C_2H_4 = 3/368 = 0.00815	0
CH_4/H_2 = 60/9 = 6.7	2
C_2H_4/C_2H_6 = 368/53 = 6.9	2

This code combination is Case 8 in table 4, which indicates this transformer has a thermal fault hotter than 700 °C.

Ethylene and ethane are sometimes called "hot metal gases." Notice this fault does not involve paper insulation, because CO is very low. H_2 and C_2H_2 are both less than 10 times the detection limit. This means the diagnosis does not have a 100% confidence level of being correct. However, due to the high ethylene, the fault is probably a bad connection where an incoming lead is bolted to a winding lead, or perhaps bad tap changer contacts, or additional core ground (large circulating currents in the tank and core). See the two bottom problems on table 10 later in this chapter. This example was chosen to show a transformer that was not a "clear cut" diagnosis. Engineering judgment is always required.

A small quantity of acetylene is present, just above the detection limit of 1 ppm. This is not high energy arcing due to the small amount; it has more likely been produced by a one-time nearby lightning strike or a voltage surge.

Example 2

	Latest DGA	Prior DGA No. 2	Prior DGA No. 1
Hydrogen (H_2)	26 ppm	27	17
Methane (CH_4)	170	164	157
Ethane (C_2H_6)	278	278	156
Ethylene (C_2H_4)	25	4	17
Acetylene (C_2H_2)	2	0	0
Carbon Monoxide (CO)	92	90	96
Carbon Dioxide (CO_2)	3,125	2,331	2,476
Nitrogen (N_2)	67,175	72,237	62,641
Oxygen (O_2)	608	1,984	440

Rogers Ratio Analysis Based on Latest DGA:

			Codes
C_2H_2/C_2H_4	= 2/25	= 0.080	0
CH_4/H_2	= 170/26	= 6.54	2
C_2H_4/C_2H_6	= 25/278	= 0.09	0

Notice that methane is increasing slowly, but ethane had a large increase between samples 1 and 2 but did not increase between samples 2 and 3. Note that two key gases (CH_2 and C_2H_6) are above IEEE Condition 1 in table 5, so the Rogers Ratio Method is valid. By referring to table 9, this combination of codes is Case 6, which indicates the transformer has a thermal fault in the temperature range of 150 °C to 300 °C.

Life history of the transformer must be examined carefully. It is, again, very important to keep accurate records of every transformer. This information is invaluable when it becomes necessary to do an evaluation.

The transformer in this example is one of three sister transformers that have had increased cooling installed and are running higher loads due to a generator upgrade several years ago. Transformer sound level (hum) is markedly higher than for the two sister transformers. The unit breaker experienced a fault some years ago, which placed high mechanical stresses on the transformer. This generally means loose windings, which can generate gas due to friction (called a thermal fault) by Rogers Ratios. Comparison with sister units reveals almost triple the ethane as the other two, and it is above the IEEE Condition 4.Gases are increasing slowly; there has been no sudden rate increase in combustible gas production. Notice the large increase in O_2 and N_2 between the first and second DGA and the large decrease between the second and third. This probably means that the oil sample was exposed to air (atmosphere) and that these two gases are inaccurate in the middle sample.

Carbon Dioxide Carbon Monoxide Ratio. This ratio is not included in the Rogers Ratio Method of analysis. However, it is useful to determine if a fault is affecting the cellulose insulation. This ratio is included in transformer oil analyzing software programs such as Delta X Research Transformer Oil Analyst. This analysis is available from the TSC at D-8440 and D-8450 in Denver.

Formation of CO_2 and CO from the degradation of oil impregnated paper increases rapidly with temperature. CO_2 /CO ratios less than three are generally considered an indication of probable paper involvement in an electrical fault (arcing or sparking), along with some carbonization of paper. Normal CO_2 /CO ratios are typically around seven. Ratios above 10 generally indicate a thermal fault with the involvement of cellulose. **This is only true if the CO_2 came from within the transformer (no leaks), and these ratios are only meaningful if there is a significant amount of both gases**. Caution must be employed because oil

degradation also produces these gases, and CO_2 can also be dissolved in the oil from atmospheric leaks. The oil sample can also pick up CO_2 and O_2 if it is exposed to air during sampling or handling at the lab. If a fault is suspected, look carefully to see if CO is increasing. If CO is increasing around 70 ppm or more per month (generation limit from IEC 60599), there is probably a fault. It is a good idea to subtract the amount of CO and CO_2 shown before the increase in CO and CO_2 began, so that only gases caused by the present fault are used in the ratio. This will eliminate CO and CO_2 generated by normal aging and other sources. When excessive cellulose degradation is suspected (CO_2 /CO ratios less than 3, or greater than 10), it may be advisable to ask for a furan analysis with the next DGA. This will give an indication of useful life left in the paper insulation [12].

You cannot de-energize a transformer based on furan analysis alone. All this test does is **give an indication** of the health of the paper; it is not a sure thing. But furan analysis is recommended by many experts to give an indication of remaining life when the CO_2 /CO ratio is less than 3 or greater than 10. Some oil laboratories do this test on a routine basis, and some charge extra for it.

Table 10 is adapted from IEC 60599 Appendix A.1.1 [12]. Some of the wording has been changed to reflect American language usage rather than European.

4.5 Moisture Problems

Moisture, especially in the presence of oxygen, is extremely hazardous to transformer insulation. Each DGA and Doble test result should be examined carefully to see if water is increasing and to determine the moisture by dry weight (M/DW) or percent saturation that is in the paper insulation. When 2% M/DW is reached, plans should be made for a dry out. Never allow the M/DW to go above 2.5% in the paper or 30% oil saturation without drying out the transformer. Each time the moisture is doubled in a transformer, the life of the insulation is cut by one-half. Keep in mind that the life of the transformer is the life of the paper, and the purpose of the paper is to keep out moisture and oxygen. For service-aged transformers rated less than 69 kV, results of up to 35 ppm are considered acceptable. For 69 kV through 288 kV, the DGA test result of 25 ppm is considered acceptable. For greater than 288 kV, moisture should not exceed 20 ppm. However, the use of absolute values for water does not always guarantee safe conditions, and the percent by dry weight should be determined. See table 12, “Doble Limits for In-Service Oils,” in section 4.6.5. If values are higher, the oil should be processed. If the transformer is kept as dry and free of oxygen as possible, transformer life will be extended.

Reclamation specifies that manufacturers dry new transformers to no more than 0.5% M/DW during commissioning. In a transformer having 10,000 pounds of paper insulation, this means that 10,000 x 0.005 = 50 pounds of water (about 6 gallons) is in the paper. This is not enough moisture to be detrimental to electrical integrity. When the transformer is new, this water is distributed equally through the transformer. It is extremely important to remove as much water as possible.

Table 10.—Typical Faults in Power Transformers [12]

Fault	Examples
Partial discharges	Discharges in gas-filled cavities in insulation, resulting from incomplete impregnation, high moisture in paper, gas in oil supersaturation or cavitation, (gas bubbles in oil) leading to X wax formation on paper.
Discharges of low energy	Sparking or arcing between bad connections of different floating potential, from shielding rings, toroids, adjacent discs or conductors of different windings, broken brazing, closed loops in the core. Additional core grounds. Discharges between clamping parts, bushing and tank, high voltage and ground, within windings. Tracking in wood blocks, glue of insulating beam, winding spacers. Dielectric breakdown of oil, load tap changer breaking contact.
Discharges of high energy	Flashover, tracking or arcing of high local energy or with power follow-through. Short circuits between low voltage and ground, connectors, windings, bushings, and tank, windings and core, copper bus and tank, in oil duct. Closed loops between two adjacent conductors around the main magnetic flux, insulated bolts of core, metal rings holding core legs.
Overheating less than 300 °C	Overloading the transformer in emergency situations. Blocked or restricted oil flow in windings. Other cooling problem, pumps valves, etc. See the “Cooling” section in this document. Stray flux in damping beams of yoke.
Overheating 300 to 700 °C	Defective contacts at bolted connections (especially busbar), contacts within tap changer, connections between cable and draw-rod of bushings. Circulating currents between yoke clamps and bolts, clamps and laminations, in ground wiring, bad welds or clamps in magnetic shields. Abraded insulation between adjacent parallel conductors in windings.
Overheating over 700 °C	Large circulating currents in tank and core. Minor currents in tank walls created by high uncompensated magnetic field. Shorted core laminations.

Notes:

1. X wax formation comes from Paraffinic oils (paraffin based). These are not used in transformers at present in the United States but are predominate in Europe.

2. The last overheating problem in the table says "over 700 °C.” Recent laboratory discoveries have found that acetylene can be produced in trace amounts at 500 °C, which is not reflected in this table. We have several transformers that show trace amounts of acetylene that are probably not active arcing but are the result of high-temperature thermal faults as in the example. It may also be the result of one arc, due to a nearby lightning strike or voltage surge.

3. A bad connection at the bottom of a bushing can be confirmed by comparing infrared scans of the top of the bushing with a sister bushing. When loaded, heat from a poor connection at the bottom will migrate to the top of the bushing, which will display a markedly higher temperature. If the top connection is checked and found tight, the problem is probably a bad connection at the bottom of the bushing.

When the transformer is energized, water begins to migrate to the coolest part of the transformer and the site of the greatest electrical stress. This location is normally the insulation in the lower one-third of the winding [5]. Paper insulation has a much greater affinity for water than does the oil. The water will distribute itself unequally, with much more water being in the paper than in the oil. The paper will partially dry the oil by absorbing water out of the oil. Temperature is also a big factor in how the water distributes itself between the oil and paper. See table 11 below for comparison.

Table 11.—Comparison of Water Distribution in Oil and Paper [5]

Temperature (degrees C)	Water in Oil	Water in Paper
20°	1	3,000 times what is in the oil
40°	1	1,000 times what is in the oil
60°	1	300 times what is in the oil

The table above shows the tremendous attraction that paper insulation has for water. The ppm of water in oil shown in the DGA is only a small part of the water in the transformer. It is important that, when an oil sample is taken, you record the oil temperature from the top oil temperature gage.

Some laboratories give percent M/DW of the insulation in the DGA. Others give percent oil saturation, and some give only the ppm of water in the oil. If you have an accurate temperature of the oil and the ppm of water, the Nomograph (figure 23, section 4.5.2) will give percent M/DW of the insulation and the percent oil saturation.

Where does the water come from? Moisture can be in the insulation when it is delivered from the factory. If the transformer is opened for inspection, the insulation can absorb moisture from the atmosphere. If there is a leak, moisture can enter in the form of water or humidity in air. Moisture is also formed by the degradation of insulation as the transformer ages. Most water penetration is flow of wet air or rain water through poor gasket seals due to pressure difference caused by transformer cooling. During rain or snow, if a transformer is removed from service, some transformer designs cool rapidly and the pressure inside drops. The most common moisture ingress points are gaskets between bushing bottoms and the transformer top and the pressure relief device gasket. Small oil leaks, especially in the oil cooling piping, will also allow moisture ingress. With rapid cooling and the resultant pressure drop, relatively large amounts of water and water vapor can be pumped into the transformer in a short time. It is important to repair small oil leaks; the small amount of visible oil is not important in itself, but it also indicates a point where moisture will enter [22].

It is critical for life extension to keep transformers as dry and as free of oxygen as possible. Moisture and oxygen cause the paper insulation to decay much faster than normal and form acids, sludge, and more moisture. Sludge settles on windings and

inside the structure, causing transformer cooling to be less efficient, and slowly over time temperature rises. (This was discussed earlier in "3. Transformer Cooling Methods.") Acids cause an increase in the rate of decay, which forms more acid, sludge, and moisture at a faster rate [20]. This is a vicious cycle of increasing speed forming more acid and causing more decay. The answer is to keep the transformer as dry as possible and as free of oxygen as possible. In addition, oxygen inhibitor should be watched in the DGA testing. The transformer oil should be dried when moisture reaches the values according to table 12. Inhibitor should be added (0.3% by weight ASTM D-3787) when the oil is processed.

Water can exist in a transformer in five forms.

1. Free water, at the bottom of the tank.
2. Ice at the tank bottom (if the oil specific gravity is greater than 0.9, ice can float).
3. Water can be in the form of a water/oil emulsion.
4. Water can be dissolved in the oil and is given in ppm in the DGA.
5. Water can be in the form of humidity if transformers have an inert gas blanket.

Free water causes few problems with dielectric strength of oil; however, it should be drained as soon as possible. Having a water-oil interface allows oil to dissolve water and transport it to the insulation. Problems with moisture in insulation were discussed above. If the transformer is out of service in winter, water can freeze. If oil specific gravity is greater than 0.9 (ice specific gravity), ice will float. This can cause transformer failure if the transformer is energized with floating ice inside. This is one reason that DGA laboratories test specific gravity of transformer oil.

The amount of moisture that can be dissolved in oil increases with temperature. (See figure 19.) This is why hot oil is used to dryout a transformer. A water/oil emulsion can be formed by purifying oil at too high temperature. When the oil

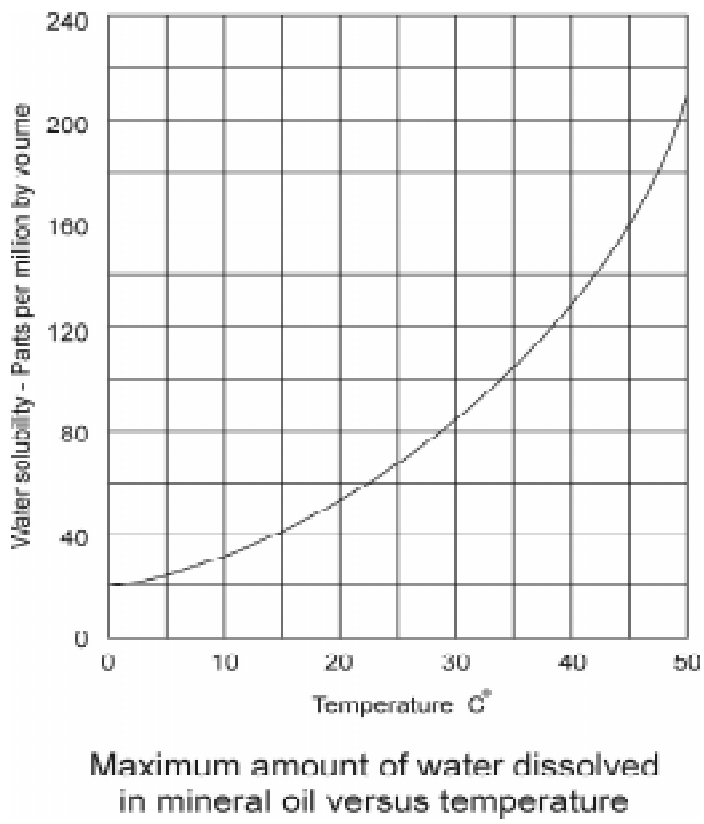

Figure 19.—Maximum Amount of Water Dissolved in Mineral Oil Versus Temperature.

cools, dissolved moisture forms an emulsion [20]. A water/oil emulsion causes drastic reduction in dielectric strength.

How much moisture in insulation is too much? When the insulation gets to 2.5% M/DW or 30% oil saturation (given on some DGAs), the transformer should have a dry out with vacuum if the tank is rated for vacuum. If the transformer is old, pulling a vacuum can do more harm than good. In this case, it is better to do round-the-clock re-circulation with a Bowser drying the oil as much as possible, which will pull water out of the paper. At 2.5% M/DW, the paper insulation is degrading much faster than normal [5]. As the paper is degraded, more water is produced from the decay products, and the transformer becomes even wetter and decays even faster. When a transformer gets above 4% M/DW, it is in danger of flashover if the temperature rises to 90 °C.

4.5.1 Dissolved Moisture in Transformer Oil. Moisture is given in the dissolved gas analysis in ppm, and some laboratories also give percent saturation. Percent saturation means percent saturation of water in the oil. This is a percentage of how much water is in the oil compared with the maximum amount of water the oil can hold. In figure 19, it can be seen that the amount of water the oil can dissolve is greatly dependent on temperature. The curves (figure 20) below are percent saturation curves. On the left line, find the ppm of water from your DGA. From this point, draw a horizontal with a straight edge. From the oil temperature, draw a vertical line. At the point where the lines intersect, read the percent saturation curve. If the point falls between two saturation curves,

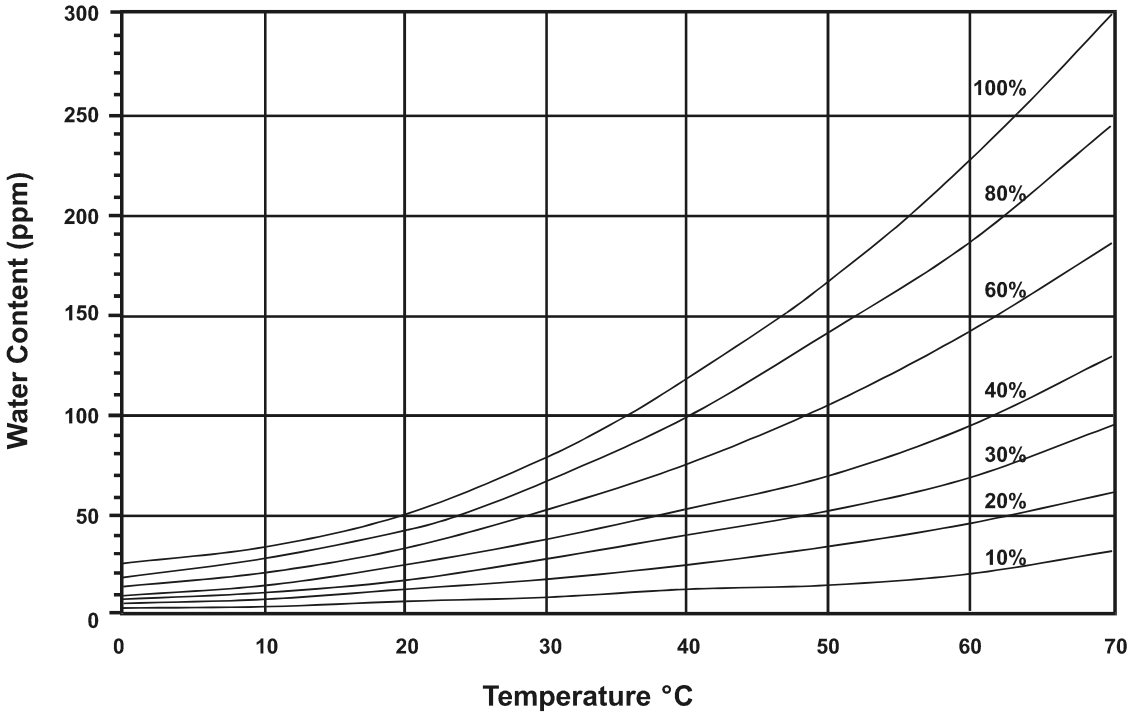

Figure 20.—Transformer Oil Percent Saturation Curves.

estimate the percent saturation based on where the point is located. For example, if the water is 30 ppm and the temperature is 40 °C, you can see on the curves that this point of intersection falls about halfway between the 20% curve and the 30% curve. This means that the oil is approximately 25% saturated. Curves shown on figure 20 are from IEEE 62-1995 [19].

Caution: Below 30 °C, the curves are not very accurate.

4.5.2 Moisture in Transformer Insulation. The illustration at right (figure 21) shows how moisture is distributed throughout transformer insulation. Notice that the moisture is distributed according to temperature, with most moisture at the bottom and less as temperature increases toward the top. In this example, there is almost twice the moisture near bottom as there is at the top. Most service-aged transformers fail in the lower one-third of the windings, which is the area of most moisture. It is also the area of most electrical stress. Moisture and oxygen are two of the transformer's worst enemies. It is very important to keep the insulation and oil as dry as possible and as free of oxygen as possible.

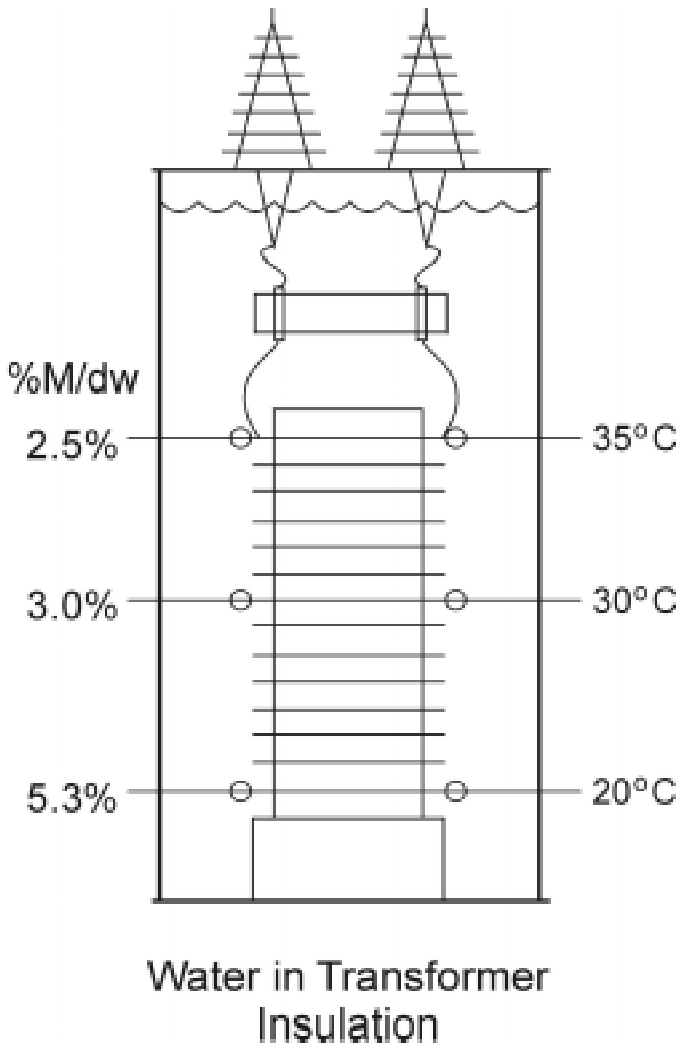

Figure 21.—Water Distribution in Transformer Insulation.

Failures due to moisture are the most common cause of transformer failures [5]. Without an accurate oil temperature, it is impossible for laboratories to provide accurate information about the M/DW or percent saturation. It will also be impossible for you to calculate this information accurately.

Experts disagree on how to tell how much moisture is in the insulation based on how much moisture is in the oil (ppm). At best, methods to determine moisture in the insulation based solely on DGA are inaccurate. The methods discussed below to determine moisture in the insulation are approximations and no decision should be made based on one DGA. However,

keep in mind that the life of the transformer is the life of the insulation. The insulation is quickly degraded by excess moisture and the presence of oxygen. Base any decisions on several DGAs over a period of time and establish a trend of increasing moisture.

If the lab does not provide the percent M/DW, IEEE 62-1995 [19] gives a method. From the curve (figure 22), find temperature of the **bottom oil sample and add 5 °C**. Do not use the top oil temperature. This approximates temperature of the bottom third (coolest part) of the winding, where most of the water is located. From this temperature, move up vertically to the curve. From this point on the curve, move horizontally to the left and find the Myers Multiplier number. Take this number and multiply the ppm of water shown on the DGA. The result is percent M/DW in the upper part of the insulation. This method gives less amount of water than the General Electric nomograph on the following page.

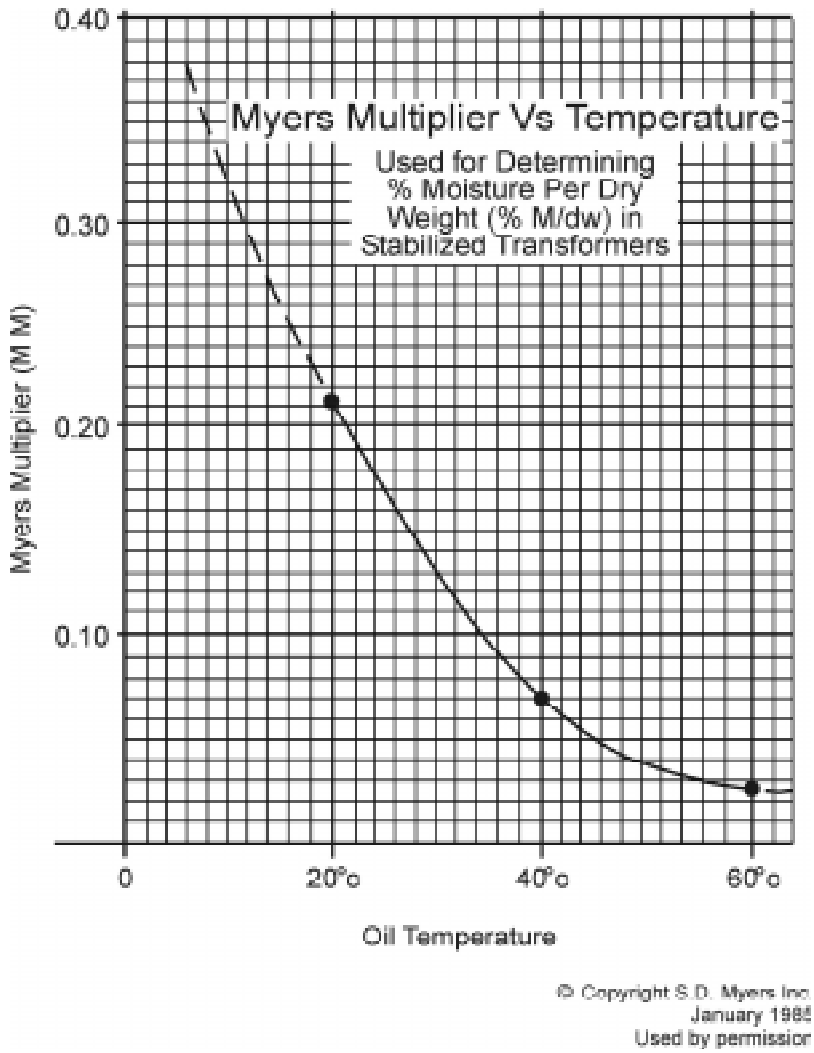

Figure 22.—Myers Multiplier Versus Temperature.

This nomograph, published by General Electric in 1974 (figure 23), gives the percent saturation of oil and percent M/DW of insulation. Use the nomograph to check yourself after you have completed the method illustrated in figure 22. The nomograph in figure 23 will show more moisture than the IEEE method.

The curves in figure 23 are useful to help understand relationships between temperature, percent saturation of the oil, and percent M/DW of the insulation. For example, pick a point on the ppm water line, say 10 ppm. Place a straight edge on that point and pick a point on the temperature line, say 45 °C. Read the percent saturation and percent M/DW on the center lines. In this example, percent saturation is about 6.5% and the % M/DW is about 1.5%. Now, hold the 10 ppm point and move the sample temperature upward (cooler), and notice how quickly the moisture numbers increase. For example, use 20 °C and read the % saturation of oil at about 18.5% and

Nomogram for in-service and service-aged transformers for determining water content of paper insulation and oil.

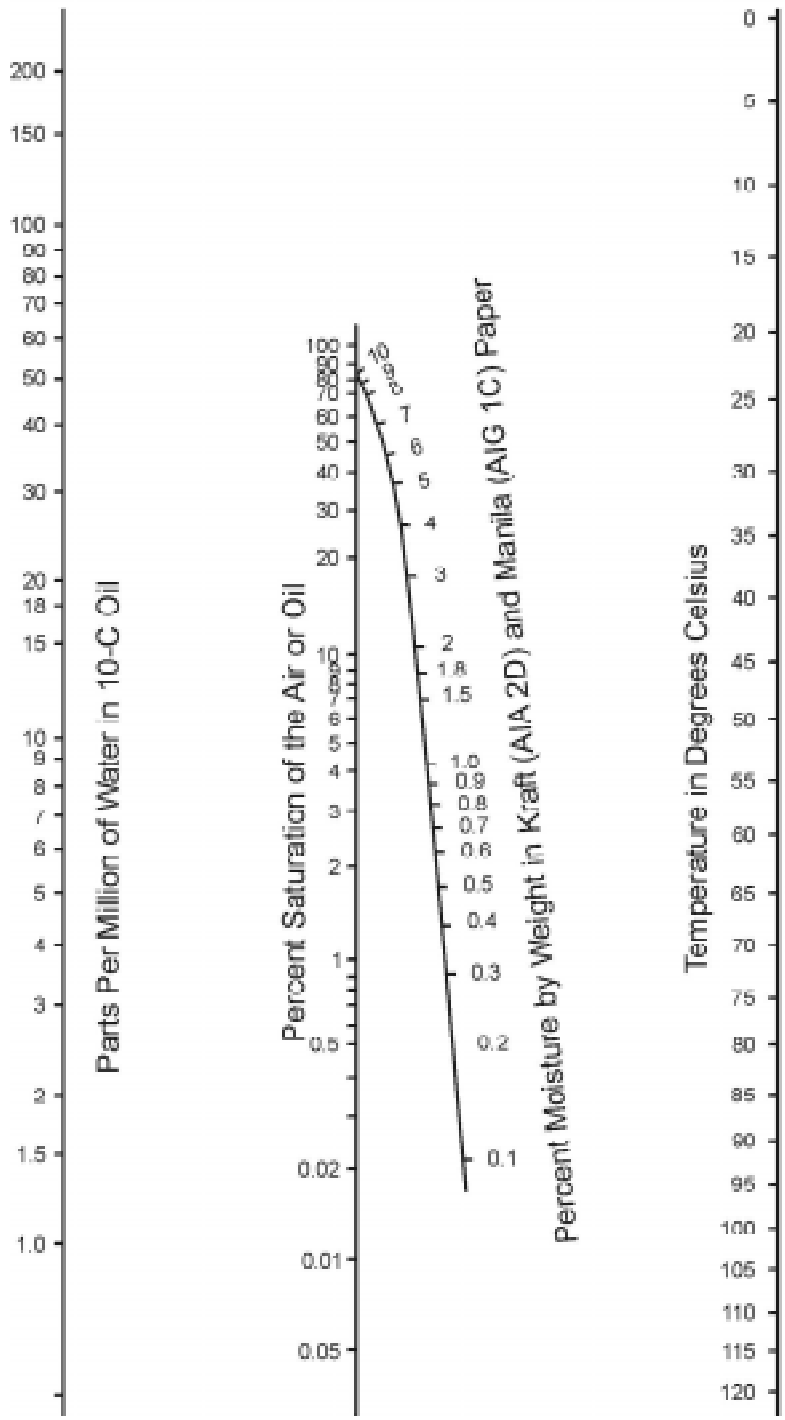

Figure 23.—Water Content of Paper and Oil Nonogram.

the % M/DW at about 3.75%. The cooler the oil, the higher the moisture percentage for the same ppm of water in the oil.

Do not make a decision on dryout based on only one DGA and one calculation; it should be based on trends over a period of time. Take additional samples and send them for analysis. **Take extra care to make sure the oil temperature is correct.** You can see by the nomograph that moisture content varies dramatically with temperature. Take **extra care** that the sample is not exposed to air. If after using the more conservative IEEE method and again subsequent samples show M/DW is 2.5% or more and the oil is 30% saturated or more, the transformer should be dried as soon as possible. Check the nomograph and curves above to determine the percent saturation of the oil. The insulation is degrading much faster than normal due to the high moisture content. Drying can be an expensive process; it is prudent to consult with others before making a final decision to do dryout. However, it is much less expensive to perform a dryout than to allow a transformer to degrade faster than normal, substantially shortening transformer life.

4.6 Transformer Oil Tests That Should Be Done Annually With the Dissolved Gas Analysis.

4.6.1 Dielectric Strength. This test measures the voltage at which the oil electrically breaks down. The test gives a good indication of the amount of contaminants (water and oxidation particles) in the oil. DGA laboratories typically use ASTM Test Method No. D-877 or D-1816. **The acceptable minium breakdown voltage is 30 kV for transformers 287.5 kV and above, and 25 kV for high voltage transformers rated under 287.5 kV.** If the dielectric strength test falls below these numbers, the oil should be reclaimed. Do not base any decision on one test result, or on one type of test; instead, look at all the information over several DGAs and establish trends before making any decision. **The dielectric strength test is not extremely valuable; moisture in combination with oxygen and heat will destroy cellulose insulation long before the dielectric strength of the oil has given a clue that anything is going wrong [5].** The dielectric strength test also reveals nothing about acids and sludge. The tests explained below are much more important.

4.6.2 Interfacial Tension (IFT). This test (ASTM D-791-91) [21], is used by DGA laboratories to determine the interfacial tension between the oil sample and distilled water. The oil sample is put into a beaker of distilled water at a temperature of 25 °C. The oil should float because its specific gravity is less than that of water, which is one. There should be a distinct line between the two liquids. The IFT number is the amount of force (dynes) required to pull a small wire ring upward a distance of 1 centimeter through the water/oil interface. (A dyne is a very small unit of force equal to 0.000002247 pound.) Good clean oil will make a very distinct line on top of the water and give an IFT number of 40 to 50 dynes per centimeter of travel of the wire ring.

As the oil ages, it is contaminated by tiny particles (oxidation products) of the oil and paper insulation. These particles extend across the water/oil interface line and weaken the tension between the two liquids. The more particles, the weaker the interfacial tension and the lower the IFT number. The IFT and acid numbers together are an excellent indication of when the oil needs to be reclaimed. It is recommended the oil be reclaimed when the IFT number falls to 25 dynes per centimeter. At this level, the oil is very contaminated and must be reclaimed to prevent sludging, which begins around 22 dynes per centimeter. See FIST 3-5 [20].

If oil is not reclaimed, sludge will settle on windings, insulation, etc., and cause loading and cooling problems discussed in an earlier section. This will greatly shorten transformer life.

There is a definite relationship between the acid number, the IFT, and the number of years in service. The accompanying curve (figure 24) shows the relationship and is found in many publications. (It was originally published in the AIEE transactions in 1955.) Notice that the curve shows the normal service limits both for the IFT and the acid number.

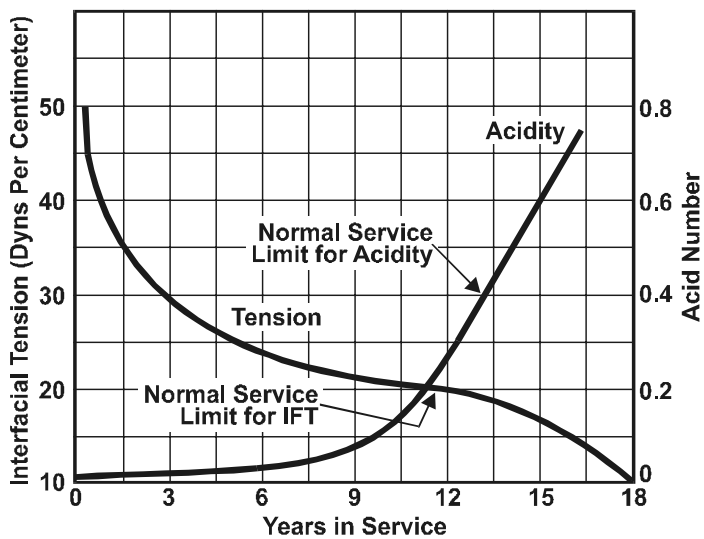

Figure 24.—Interfacial Tension, Acid Number, Years in Service.

4.6.3 Acid Number. Acid number (acidity) is the amount of potassium hydroxide (KOH) in milligrams (mg) that it takes to neutralize the acid in 1 gram (gm) of transformer oil. The higher the acid number, the more acid is in the oil. New transformer oils contain practically no acid. Oxidation of the insulation and oils forms acids as the transformer ages. The oxidation products form sludge and precipitate out inside the transformer. The acids attack metals inside the tank and form soaps (more sludge). Acid also attacks cellulose and accelerates insulation degradation. Sludging has been found to begin when the acid number reaches 0.40; it is obvious that the oil should be reclaimed before it reaches 0.40. **It is recommended that the oil be reclaimed when it reaches 0.20 mg KOH/gm [20].** As with all others, this decision must not be based on one DGA test, but watch for rising trend in the acid number each year. Plan ahead and begin budget planning before the acid number reaches 0.20.

4.6.4 Test for Oxygen Inhibitor Every 3 to 5 Years with the Annual DGA Test. In previous sections, the need to keep the transformer dry and O_2 free was emphasized. Moisture is destructive to cellulose and even more so in the

presence of oxygen. Some publications state that each time you double the moisture (ppm), you halve the life of the transformer. As was discussed, acids are formed that attack the insulation and metals which form more acids, causing a viscous cycle. Oxygen inhibitor is a key to extending the life of transformers. The inhibitor currently used is Ditertiary Butyl Paracresol (DBPC). This works sort of like a sacrificial anode in grounding circuits. The oxygen attacks the inhibitor instead of the cellulose insulation. As this occurs and the transformer ages, the inhibitor is used up and needs to be replaced. The ideal amount of DBPC is 0.3% by total weight of the oil (ASTM D-3487).

Have the inhibitor content tested with the DGA every 3 to 5 years. If the inhibitor is 0.08% the transformer is considered uninhibited, and the oxygen freely attacks the cellulose. If the inhibitor falls to 0.1%, the transformer should be re-inhibited. For example, if your transformer tested 0.1%, you need to go to 0.3% by adding 0.2% of the total weight of the transformer oil. The nameplate gives the weight of oil—say 5,000 pounds—so 5,000 pounds X 0.002 = 10 pounds of DBPC needs to be added. It's ok if you get a little too much DBPC; this does not hurt the oil. Dissolve 10 pounds of DBPC in transformer oil that you have heated to the same temperature as the oil inside the transformer. It may take some experimentation to get the right amount of oil to dissolve the DBPC. Mix the oil and inhibitor in a clean container until all the DBPC is dissolved. Add this mixture to the transformer using the method given in the transformer instruction manual for adding oil.

Caution: Do not attempt this unless you have had experience. Contact an experienced contractor or experienced Reclamation people if you need help.

In either case, do not neglect this important maintenance function; it is critical to transformer insulation to have the proper amount of oxygen inhibitor.

4.6.5 Power Factor. Power factor indicates the dielectric loss (leakage current) of the oil. This test may be done by the DGA laboratories. It may also be done by Doble testing. A high power factor indicates deterioration and/or contamination by-products such as water, carbon, or other conducting particles; metal soaps caused by acids (formed as mentioned above); attacking transformer metals; and products of oxidation. The DGA labs normally test the power factor at 25 °C and 100 °C. Doble information [23] indicates the in-service limit for power factor is less than 0.5% at 25 °C. If the power factor is greater than 0.5% and less than 1.0%, further investigation is required; the oil may require replacement or fullers earth filtering. **If the power factor is greater than 1.0% at 25 °C, the oil may cause failure of the transformer; replacement or reclaiming is required**. Above 2%, the oil should be removed from service and reclaimed or replaced because equipment failure is a high probability.

4.6.6 Furans. Furans are a family of organic compounds which are formed by degradation of paper insulation (ASTM D-5837). Overheating, oxidation, and degradation by high moisture content contribute to the destruction of insulation

and form furanic compounds. Changes in furans between DGA tests are more important than individual numbers. The same is true for dissolved gases. Transformers with greater than 250 parts per billion (ppb) should be investigated because paper insulation is being degraded. Also look at the IFT and acid number.

Doble in-service limits are reproduced below to support the above recommended guidelines.

Table 12 below is excerpted from Doble Engineering Company's *Reference Book on Insulating Liquids and Gases* [23]. These Doble Oil Limit tables support information given in prior sections in this FIST manual and are shown here as summary tables.

Table 12.—Doble Limits for In-Service Oils

	Voltage Class		
	≤ 69 kV	>69 ≤ 288 kV	>288 kV
Dielectric Breakdown Voltage, D 877, kV min	26	30	[1]
Dielectric Breakdown Voltage D 1816, .04-inch gap, kV, min.	20	20	25
Power Factor at 25 °C, D 924, max.	0.5	0.5	0.5
Water Content, D 1533, ppm, max.	[2]35	[2]25	[2]20
Interfacial Tension, D 971, dynes/cm, min.	25	25	25
Neutralization Number, D 974, mg KOH/gm, max.	0.2	0.15	0.15
Visual Exam	clear and bright	clear and bright	clear
Soluble Sludge	[3]ND	[3]ND	[3]ND

[1] D 877 test is not as sensitive to dissolved water as the D 1816 test and should not be used with oils for extra high voltage (EHV) equipment. Dielectric breakdown tests do not replace specific tests for water content.

[2] The use of absolute values of water-in-oil (ppm) do not always guarantee safe conditions in electrical apparatus. The percent by dry weight should be determined from the curves provided. See the information in section. "4.5 Moisture Problems."

[3] ND = None detectable.

These recommended limits for in-service oils are not **intended to be used as absolute requirements** for removing oil from service but to provide guidelines to aid in determining when remedial action is most beneficial. Remedial action will vary depending upon the test results. Reconditioning of oil, that is, particulate removal (filtration) and drying, may be required if the dielectric breakdown voltage or water content do not meet these limits. Reclamation (clay filtration) or replacement of the oil may be required if test values for power factor, interfacial tension, neutralization number, or soluble sludge do not meet recommended limits.

Additional guidelines given in table 13 have been found useful.

Table 13.—Additional Guidelines for In-Service Oils

Power factor at 25 °C		
≤ 0.5%		Acceptable
> 0.5 ≤ 1.0%		Investigate, oil may require replacement or clay treatment
> 1.0 ≤ 2.0%		Investigate, oil may cause failure of the equipment, oil may require replacement or clay treatment
> 2.0%		Remove from service, investigate, oil may require replacement or clay treatment
Neut. No. (mg KOH/gm)	**IFT (dynes/cm)**	
< 0.05	≥25	Acceptable
≥ 0.05 < 0.15	≥ 22 < 25	Clay treat or replace at convenience ≥ 345 kV, clay treat or replace in immediate future
≥0.15 < 0.5	≥16 > 22	Clay treat or replace in immediate future
≥0.5	<16	Replace[1]

[1] When an oil is allowed to sludge in service, special treatment may be required to clean the core, coil, and tank.

Oil Treatment Specifications.

After the oil is treated, the results should be as follows.

Gases		**Physical Properties**	
H_2	5 ppm or less	Water	less than 10 ppm
CH_4	5 ppm or less	Dielectric strength	38 kV min. ASTM D-1816
C_2H_2	0 ppm	IFT	40 dynes/cm min.
CO	20 ppm or less	Acid number	0.3 mg KOH/gm max.
CO_2	300 ppm or less	O_2 inhibitor	0.3% by oil weight min.
O_2	4,000 ppm or less		

4.6.7 Taking Oil Samples for DGA. Sampling procedures and lab handling are usually areas that cause the most problems in getting an accurate DGA. There are times when atmospheric gases, moisture, or hydrogen take a sudden leap from one DGA to the next. As has been mentioned, at these times, one should immediately take another sample to confirm DGA values. It is, of course, possible that the transformer has developed an atmospheric leak, or that a fault has suddenly occurred inside. More often, the sample has not been taken properly, or it has been contaminated with atmospheric gases or mishandled in other ways. The sample must be protected from all contamination, including atmospheric exposure.

Do not take samples from the small sample ports located on the side of the large sample (drain) valves. These ports are too small to adequately flush the large valve and pipe nipple connected to the tank; in addition, air can be drawn past the threads and contaminate the sample. Fluid in the valve and pipe nipple remain dormant during operation and can be contaminated with moisture, microscopic stem packing particles, and other particles. The volume of oil in this location can also be contaminated with gases, especially hydrogen. Hydrogen is one of the easiest gasses to form. With hot sun on the side of the transformer tank where the sample valve is located, high ambient temperature, high oil temperature, and captured oil in the sample valve and extension, hydrogen formed will stay in this area until a sample is drawn.

The large sample (drain) valve can also be contaminated with hydrogen by galvanic action of dissimilar metals. Sample valves are usually brass, and a brass pipe plug should be installed when the valve is not being used. If a galvanized or black iron pipe is installed in a brass valve, the dissimilar metals produce a thermocouple effect, and circulating currents are produced. As a result, hydrogen is generated in the void between the plug and valve gate. If the valve is not flushed **very** thoroughly the DGA will show high hydrogen.

Oil should not be sampled for DGA purposes when the transformer is at or below freezing temperature. Test values which are affected by water (such as dielectric strength, power factor, and dissolved moisture content) will be inaccurate.

Caution: Transformers must not be sampled if there is a negative pressure (vacuum) at the sample valve.

This is typically not a problem with conservator transformers. If the transformer is nitrogen blanketed, look at the pressure/vacuum gage. If the pressure is positive, go ahead and take the sample. If the pressure is negative, a vacuum exists at the top of the transformer. If there is a vacuum at the bottom, air will be pulled in when the sample valve is opened. Wait until the pressure gage reads positive before sampling. **Pulling in a volume of air could be disastrous if the transformer is energized.**

If negative pressure (vacuum) is not too high, the weight of oil (head) will make positive pressure at the sample valve, and it will be safe to take a sample. Oil

head is about 2.9 feet (2 feet 10.8 inches) of oil per pounds per square inch (psi). If it is important to take the sample even with a vacuum showing at the top, proceed as described below.

Use the sample tubing and adaptors described below to adapt the large sample valve to ⅛-inch tygon tubing. Fill a length (2 to 3 feet) of tygon tubing with new transformer oil (no air bubbles) and attach one end to the pipe plug and the other end to the small valve. Open the large sample (drain) valve a small amount and very slowly crack open the small valve. **If oil in the tygon tubing moves toward the transformer, shut off the valves immediately. Do not allow air to be pulled into the transformer.** If oil moves toward the transformer, there is a vacuum at the sample valve. Wait until the pressure is positive before taking the DGA sample. If oil is pushed out of the tygon tubing into the waste container, there is a positive pressure and it is safe to proceed with DGA sampling. Shut off the valves and configure the tubing and valves to take the sample per the instructions below.

DGA Oil Sample Container. Glass sample syringes are recommended. There are different containers such as stainless steel vacuum bottles and others. It is recommended that only glass syringes be used. If there is a small leak in the sampling tubing or connections, vacuum bottles will draw air into the sample, which cannot be seen inside the bottle. The sample will show high atmospheric gases and high moisture if the air is humid. Other contaminates such as suspended solids or free water cannot be seen inside the vacuum bottle. Glass syringes are the simplest to use because air bubbles are easily seen and expelled. Other contaminates are easily seen, and another sample can be immediately taken if the sample is contaminated. The downside is that glass syringes must be handled carefully and must be protected from direct sunlight. They should be returned to their shipping container immediately after taking a sample. If they are exposed to sunlight for any time, hydrogen will be generated and the DGA will show false hydrogen readings.

For these reasons, glass syringes are recommended, and the instructions below include only this sampling method.

Obtain a brass pipe plug (normally 2 inches) that will thread into the sample valve at the bottom of the transformer. Drill and tap the pipe plug for ⅛-inch NPT and insert a ⅛-inch pipe nipple (brass if possible) and attach a small ⅛-inch valve for controlling the sample flow. Attach a ⅛-inch tygon tubing adaptor to the small valve outlet. Sizes of the piping and threads above do not matter; any arrangement with a small sample valve and adaptor to ⅛-inch tygon tubing will suffice. See figure 25.

Taking the Sample.

- Remove the existing pipe plug and inspect the valve opening for rust and debris.

- Crack open the valve and allow just enough oil to flow into the waste container to flush the valve and threads. Close the valve and wipe the threads and outlet with a clean dry cloth.

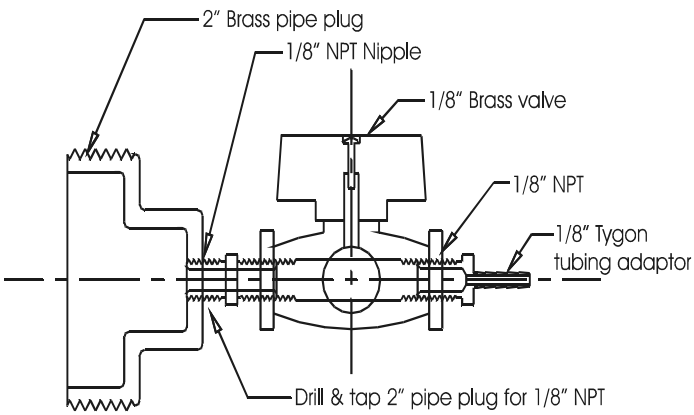

Figure 25.—Oil Sampling Piping.

- Re-open the valve slightly and flush approximately 1 quart into the waste container.

- Install the brass pipe plug (described above) and associated ⅛-inch pipe and small valve, and a short piece of new ⅛-inch tygon tubing to the outlet of the ⅛-inch valve.

- Never use the same sample tubing on different transformers. This is one way a sample can be contaminated and give false readings.

- Open both the large valve and small sample valve and allow another quart to flush through the sampling apparatus. Close both valves. Do this before attaching the glass sample syringe. Make sure the short piece of tygon tubing that will attach to the sample syringe is installed on the ⅛-inch valve before you do this.

- Install the glass sample syringe on the short piece of ⅛-inch tubing. Turn the stopcock handle on the syringe so that the handle points toward the syringe. **Note: The handle always points toward the closed port.** The other two ports are open to each other. See figure 26.

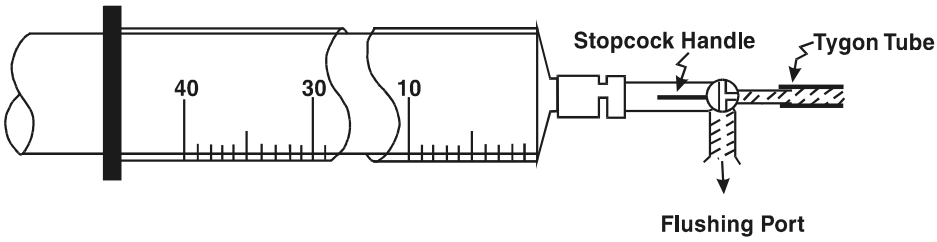

Figure 26.—Sample Syringe (Flushing).

- Open the large sample valve a small amount and adjust the ⅛-inch valve so that a gentle flow goes through the flushing port of the glass syringe into the waste bucket.

- Slowly turn the syringe stopcock handle so that the handle points to the flushing port (figure 27). This closes the flushing and allows oil to flow into the sample syringe. Do not pull the syringe handle; this will create a vacuum and allow bubbles to form. The syringe handle (piston) should back out very slowly. If it moves too fast, adjust the small ⅛-inch valve until the syringe slows, and hold your hand on the back of the piston so you can control the travel.

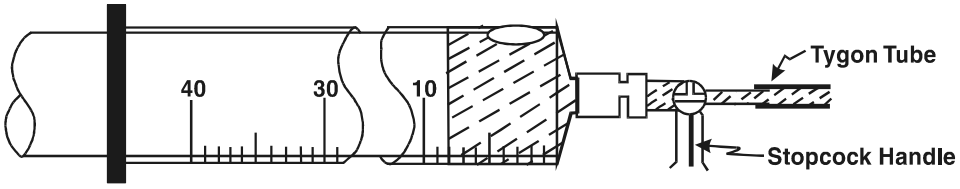

Figure 27.—Sample Syringe (Filling).

- Allow a small amount, about 10 cubic centimeters (cc), to flow into the syringe and turn the stopcock handle again so that it points to the syringe. This will again allow oil to come out of the flushing port into the waste bucket.

- Pull the syringe off the tubing, but do not shut off the oil flow. Allow the oil flow to continue into the waste bucket.

- Hold the syringe vertical and turn the stopcock up so that the handle points away from the syringe. Press the syringe piston to eject any air bubbles, but leave 1 or 2 cc oil in the syringe. See the accompanying figure 28.

  Caution: Do not eject all the oil, or air will reenter.

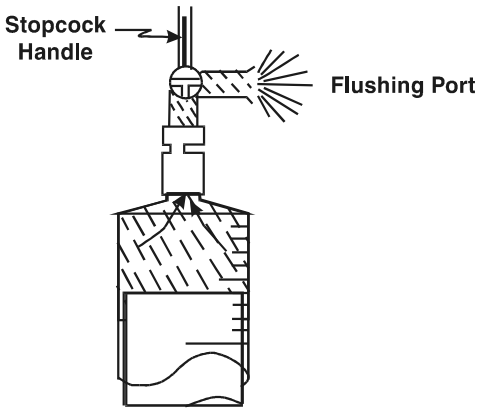

Figure 28.—Sample Syringe Bubble Removal.

- Turn the stopcock handle toward the syringe. The small amount of oil in the syringe should be free of bubbles and ready to receive the sample. If there are still bubbles at the top, repeat the process until you have a small amount of oil in the syringe with no bubbles.

- Reattach the tygon tubing. This will again allow oil to flow out of the flushing port. Slowly turn the stopcock handle toward the flushing port which again will allow oil to fill the syringe. The syringe piston will again back slowly out of the syringe. Allow the syringe to fill about 80% full. Hold the piston so you can stop its movement at about 80% filled.

  Caution: Do not pull the piston. This will cause bubbles to form.

- Close the stopcock by turning the handle toward the syringe. Oil again will flow into the waste container. Shut off both valves, remove the sampling apparatus, and reinstall the original pipe plug.

  Caution: Do not eject any bubbles that form after the sample is collected; these are gases that should be included in the lab sample.

- Return the syringe to its original container immediately. **Do not allow sunlight to impact the container for any length of time.** Hydrogen will form and give false readings in the DGA.

- Carefully package the syringe in the same manner that it was shipped to the facility and send it to the lab for processing.

- Dispose of waste oil in the plant waste oil container.

4.6.8 Silicone Oil-Filled Transformers. Silicone oils became more common when PCBs were discontinued. They are mainly used in transformers inside buildings and that are smaller than generator step-up transformers. Silicone oils have a higher fire point than mineral oils and, therefore, are used where fire concerns are more critical. As of this writing, there are no definitive published standards. IEEE has a guide and Doble has some service limits, but there are no standards. Information below is taken from the IEEE publication, from Doble, from articles, from IEC 60599 concepts, and from Delta X Research's/Transformer Oil Analyst rules. Silicone oil dissolved gas analysis is in the beginning stages, and the suggested methods and limits below are subject to change as we gain more experience. However, in the absence of any other methods and limits, use the ones below as a beginning.

Silicone oils used in transformers are polydimethylsiloxane fluids, which are different than mineral oils. Many of the gases generated by thermal and electrical faults are the same. The gases are generated in different proportions than with transformer mineral oils. Also, some fault gases have different solubilities in silicone oils than in mineral oils. Therefore, the same faults would produce different concentrations and different generation rates in silicone oils than mineral oils.

As with mineral oil-filled transformers, three principal causes of gas generation are aging, thermal faults, and/or electrical faults resulting in deterioration of solid insulation and deterioration of silicone fluid. These faults have been discussed at length in prior sections and will not be discussed in great detail here.

Overheating of silicone oils causes degradation of fluid and generation of gases. Gases generated depend on the amount of dissolved oxygen in the fluid, temperature, and how close bare copper conductors are to the heating. When a transformer is new, silicone oil will typically contain a lot of oxygen. Silicone transformers are typically sealed and pressurized with nitrogen. New silicone oil is not degassed; and, as a rule, oxygen concentration will be equivalent to oxygen solubility (maximum) in silicone. The silicone has been exposed to atmosphere for

some time during manufacture of the transformer and manufacturer and storage of silicone oil itself. Therefore, carbon monoxide and carbon dioxide are easily formed and dissolved in the silicone due to the abundance of oxygen in the oil resulting from this atmospheric exposure. In normal new silicone transformers (no faults), both carbon monoxide and carbon dioxide will be generated in the initial years of operation. As the transformer ages and oxygen is depleted, generation of these gases slows and concentrations level off [25]. See figure 29 below for the relationship of decreasing oxygen and increasing carbon monoxide and carbon dioxide as a transformer ages. This curve is for general information only and should not be taken to represent any particular transformer. A real transformer with changes in loading, ambient temperatures, and various duty cycles would make these curves look totally different.

After the transformer is older (assuming no faults have occurred), oxygen concentration will reach equilibrium (figure 29). Reaching equilibrium may take a few years depending on the size of the transformer, loading, ambient temperatures, etc. After this time, oxygen, carbon monoxide, and carbon dioxide level off and the rate of production of these gases from normal aging should be relatively constant. If generation rates of these gases change greatly (seen from the DGA), a fault has occurred, either thermal or electrical. Rate of generation of these gases and amounts can be used to roughly determine what the fault is. Once you notice an significant increase in rate of generation of any gas, it is a good idea to subtract the amount of gas that was already in the transformer before this increase. This ensures that gases used in the diagnosis are only gases that were generated after the fault began.

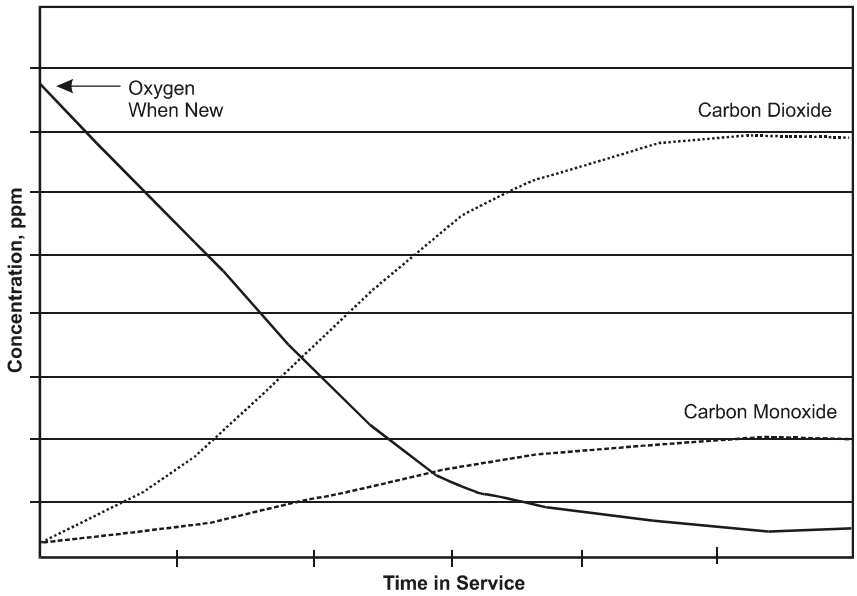

Figure 29.—Relationship of Oxygen to Carbon Dioxide and Carbon Monoxide as Transformer Ages.

Carbon monoxide will be a lot higher in a silicone transformer than a mineral oil-filled one. The difficulty is in trying to determine what is producing the CO; is it coming from normal aging of oil or from deterioration of paper from a fault condition. The only solution is a furan analysis. If the CO content is greater than the IEEE limit of 3,000 ppm [26], and the generation rate G1 is met or exceeded, a furan analysis is recommended with the annual DGA. If a thermal fault is

occurring and is producing CO and small amounts of methane and hydrogen, the fault may be masked by the normal production of CO from the silicone oil itself. If the CO generation rate has greatly increased, along with other gases, it becomes obvious that a fault has occurred. The furan analysis can only tell you if the paper is involved (being heated) in the fault.

Some general conclusions can be drawn by comparing silicone oil and mineral oil transformers.

1. All silicone oil filled transformers will have a great deal more CO than normal mineral oil filled transformers. CO can come from two sources, the oil itself and from degradation of paper insulation. If the DGA shows little other fault in gas generation besides CO, the only way to tell for certain if CO is coming from paper degradation (a fault) is to run a furan analysis with the DGA. If other fault gases are also being generated in significant amounts, in addition to CO, obviously there is a fault, and CO is coming from paper degradation.

2. There will generally be more hydrogen present than in a mineral oil-filled transformer.

3. Due to "fault masking," mentioned above, it is almost impossible to diagnose what is going on inside a silicone filled transformer based solely on DGA. One exception is if acetylene is being generated, there is an active arc. You must also look at gas generation rates and operating history. Look at loading history, through faults, and other incidents. It is imperative that detailed records of silicone oil filled transformers be carefully kept up-to-date. These are invaluable when a problem is encountered.

4. If acetylene is being generated in any amount, there is a definitely an active electrical arc. The transformer should be removed from service.

5. In general, oxygen in a silicone-filled transformer comes from atmospheric leaks or was present in the transformer oil when it was new. This oxygen is consumed as CO and CO_2 are formed from the normal heating from operation of the transformer.

6. Once the transformer has matured and the oxygen has leveled off and remained relatively constant for two or more DGA samples, if you see a sudden increase in oxygen, and perhaps carbon dioxide and nitrogen, the transformer has developed a leak.

In table 14 below are IEEE limits [26], compared with Doble [25] in a study of 299 operating transformers. The table of gases from the Doble study seems more realistic. They show gas level average of 95% of transformers in the study. Note, with the last four gases, limits given by the IEEE (trial use guide) run over 70% higher than the Doble 95% norms. But with the first three gases, hydrogen, methane, and ethane, the IEEE limits are well below the amount of gas found in 95% norms in the Doble study. **We obviously cannot have limits that are below the amount of gas found in normal operating transformers.**

Therefore, it is suggested that we use the Doble (95% norm) limits. The 95% norm limit means that 95% of the silicone oil transformers studied had gas levels below these limits. Obviously, 5% had gases higher than these limits. These are problem transformers that we should pay more attention to.

Table 14.—Comparison of Gas Limits

Gas	Doble 95% Norm	IEEE Limits
Hydrogen	511	200
Methane	134	100
Ethane	26	30
Ethylene	17	30
Acetylene	0.6	1
CO	1,749	3,000
CO_2	15,485	30,000
Total Combustibles	2,024	3,360

In table 15, the IEEE limits for L1 were chosen. For L2 limits, a statistical analysis was applied, and two standard deviations were added to L1 to obtain L2. For L3 limits, the L1 limits were doubled.

Table 15.—Suggested Levels of Concern (Limits)

Gas	L1 (ppm)	L2 (ppm)	L3 (ppm)	G1 (ppm per month)	G2 (ppm per month)
Hydrogen	200	240	400	20	100
Methane	100	125	200	10	50
Ethane	30	40	60	3	15
Ethylene	30	25	60	3	15
Acetylene	1	2	3	1	1
CO	3,000	3,450	6,000	300	1,500
CO_2	30,000	34,200	60,000	1,500	15,000
TDCG	3,360	3,882	6,723	na	na

Gas generation rate limits G1 are 10% of L1 limits per month. G2 generation rate limits are 50% of L1 limits per month. These basic concepts were taken from IEC 60599 [12], for mineral oil transformers and applied to silicone oil transformers

due to absence of any other criteria. As our experience grows in silicone DGA, these may have to be changed, but they will be used in the beginning.

Limits L1, L2, and L3 represent the concentration in individual gases in ppm. G1 and G2 represents generation rates of individual gases in ppm per month. To obtain G1 and G2 in ppm per day divide the per month numbers by 30. Except for acetylene, G1 is 10% of L1 and G2 is 50% of L1. The generation rates (G1, G2), are points where our level of concern should increase, especially when considered with the L1, L2, and L3 limits. At G2 generation rate, we should be extremely concerned and reduce the DGA sampling interval accordingly, and perhaps plan an outage, etc.

Except for acetylene, generation rate levels G1 and G2 were taken from IEC 60599 reference [12] which is used with mineral oil transformers. **Any amount of ongoing acetylene generation means active arcing inside the transformer. In this case, the transformer should be removed from service.** These criteria were chosen because of an absence of any other criteria. As dissolved gas analysis criteria for silicone oils becomes better known and quantified table 15 will change to reflect new information.

As with mineral oil-filled transformers, gas generation rates are much more important that the amount of gas present. Total accumulated gas depends a lot on age (an older transformer has more gas). If the rate of generation of any combustible gas shows a sudden increase in the DGA, take another oil sample immediately to confirm the gas generation rate increase. If the second DGA confirms a generation rate increase, get some outside advice. Be careful; gas generation rates increase somewhat with temperature variations caused by increased loading and summer ambient temperatures. However, higher operating temperatures are also the most likely conditions for a fault to occur. The real question is has the increased gas generation rate been caused by a fault or increased temperature from greater loading or higher ambient temperature?

If gas generation rates are fairly constant (no big increases and less than G1 limits above), what do we do if a transformer exceeds the L1 limits? We begin to pay more attention to that transformer, just as we do with a mineral oil transformer. We may shorten the DGA sampling interval, reduce loading, check transformer cooling, get some outside advice, etc. As with mineral oil transformers, age exerts a big influence in accumulated gas. We should be much more concerned if a 3-year old transformer which has exceeded the L1 limits than if a 30-year old transformer exceeds the limits. However, if G1 generation rates are exceeded in either an old or new transformer, we should step up our level of concern.

If accumulated gas exceeds the L2 limit, we may plan to have the transformer degassed. Examine the physical tests in the DGAs and compare them to the Doble/IEEE table (table 16) (*Reference Book on Insulating Liquids and Gasses*) [23]. The oil should be treated in whatever manner is appropriate if these limits are exceeded.

If both L1 limits and G1 limits are exceeded, we should become **more concerned**. Reduce sampling intervals, get outside advice, reduce loading, check transformer cooling and oil levels, etc. **If G2 generation limits are exceeded**, **we should be extremely concerned.** It will not be long before L3 limits are exceeded, and consideration must be given to removing the transformer from service, for testing, repair, or replacement.

If acetylene is being generated, the transformer should be taken out of service. However as with mineral oil transformers, a one-time nearby lightning strike or through fault can cause a "one-time" generation of acetylene. If you notice acetylene in the DGA, immediately take another sample. **If the amount of acetylene is increasing, an active electrical arc is present within the transformer. It should be taken out of service.**

If you have a critical silicone (or mineral oil-filled transformer), such as a single station service transformer, or excitation transformer, you should find out if a spare is available at another facility or from Western Area Power Administration or Bonneville Power. If there are no other possible spares consider beginning the budget process for getting a spare transformer.

Table 16 lists test limits for service-aged silicone filled transformer oil. If any of these limits are exceeded, it is suggested that the oil be treated in whatever manner is appropriate to return the oil to serviceable condition.

Table 16.—Doble and IEEE Physical Test Limits for Service-Aged Silicone Fluid

Test	Acceptable Limits	Unacceptable Values Indicate	ASTM Test Method
Visual	Clear free of particles	Particulates, free water	D 1524 D 2129
Dielectric breakdown voltage	30 kV	Particulates, dissolved water	D 877
Water content maximum	70 ppm (Doble) 100 ppm (IEEE)	Dissolved water contamination	D 1533
Power factor max. at 25 °C	0.2	Polar/ionic contamination	D 924
Viscosity at 25 °C, cSt	47.5–52.5	Fluid degradation contamination	D 44
Acid neutralization number max, mg KOH/gm	0.1 (Doble) 0.2 (IEEE)	Degradation of cellulose or contamination	D 974

Note: If only one number appears, both Doble and IEEE have the same limit.

If the above limits are exceeded in the DGA, the silicone oil should be filtered, dried or treated to correct the specific problem.

4.7 Transformer Testing

When the transformer is new before energizing and every 3 to 5 years, the transformer and bushings should be Doble tested. Transformer testing falls into three broad categories: Factory testing when the transformer is new or has been refurbished, acceptance testing upon delivery, and field testing for maintenance and diagnostic purposes. Some tests at the factory are common to most power transformers, but many of the factory tests are transformer- specific. Table 17 lists several tests. This test chart has been adapted from IEEE 62-1995 reference [19]. Not all of the listed tests are done at the factory, and not all of them are done in the field. Each transformer and each situation is different, requiring its own unique approach and tests.

Details of how to run specific tests will not be addressed in this FIST. It would be impractical to repeat how to do Doble testing of a transformer when the information is readily available in Doble publications. With some exceptions, this is true for most of the tests. Specific information is readily available within the test instrument manufacturers literature. Another example is the transformer turns ratio test (TTR); specific test information is available with the instrument. However, information on some tests may not be available and will be covered briefly.

4.7.1 Winding Resistances. Winding resistances are tested in the field to check for loose connections, broken strands, and high contact resistance in tap changers. Key gases increasing in the DGA will be ethane and/or ethylene and possibly methane. Results are compared to other phases in wye connected transformers or between pairs of terminals on a delta-connected winding to determine if a resistance is too high. Resistances can also be compared to the original factory measurements. Agreement within 5% for any of the above comparisons is considered satisfactory. You may have to convert resistance measurements to the reference temperature used at the factory (usually 75 °C) to compare your resistance measurements to the factory results. To do this use the following formula:

$$Rs = Rm \frac{Ts + Tk}{Tm + Tk}$$

Rs = Resistance at the factory reference temperature (found in the transformer manual)
Rm = Resistance you actually measured
Ts = Factory reference temperature (usually 75 °C)
Tm = Temperature at which you took the measurements
Tk = a constant for the particular metal the winding is made from:
234.5 °C for copper 225 °C for aluminum

It is very difficult to determine actual winding temperature in the field, and, normally, this is not needed. You only need to do the above temperature corrections if you are going to compare resistances to factory values. Normally, only the phase resistances are compared to each other, and you do not need the winding temperature to compare individual windings.

You can compare winding resistances to factory values; change in these values can reveal serious problems. A suggested method to obtain an accurate temperature is outlined below. If a transformer has just been de-energized for testing, the winding will be cooler on the bottom than the top, and the winding hot spot will be hotter than the top oil temperature. What is needed is the average winding temperature, and it is important to get the temperature as accurate as possible for comparisons.

The most accurate method is to allow the transformer sit de-energized until temperatures are equalized. This test can reveal serious problems, so it's worth the effort.

Winding resistances are measured using a Wheatstone Bridge for values 1 ohm or above and using a micro-ohmmeter or Kelvin Bridge for values under 1 ohm. Multi-Amp (now AVO) makes a good instrument for these measurements which is quick and easy to use. Take readings from the top of each bushing to neutral for wye connected windings and across each pair of bushings for delta connected windings. If the neutral bushing is not available on wye connected windings, you can take each one to ground (if the neutral is grounded), or take readings between pairs of bushings as if it were a delta winding. Be consistent each time so that a proper comparison can be made. The tap changer can also be changed from contact to contact, and the contact resistance can be checked. Keep accurate records and connection diagrams so that later measurements can be compared.

4.7.2 Core Insulation Resistance and Inadvertent Core Ground Test. Core insulation resistance and inadvertent core ground test is used if an additional core ground is suspected; this may be indicated by the DGA. Key gases to look for are ethane and/or ethylene and possibly methane. These gases may also be present if there is a poor connection at the bottom of a bushing or a bad tap changer contact. Therefore, this test is only necessary if the winding resistance test above shows all the connections and if tap changer contacts are in good condition.

The intentional core ground must be disconnected. This may be difficult, and some oil may have to be drained to accomplish this. On some transformers, core grounds are brought outside through insulated bushings and are easily accessed. A standard dc megohmmeter is then attached between the core ground lead (or the top of the core itself) and the tank (ground). The megohmmeter is used to place a dc voltage between these points, and the resistance measured. A new transformer should read greater than 1,000 megohms. A service-aged transformer should read greater than 100 megohms. Ten to one-hundred megohms is indicative of deteriorating insulation between the core and ground. Less than 10 megohms is

sufficient to cause destructive circulating currents and must be further investigated [19]. A solid core ground may read zero ohms; this, of course, causes destructive circulating currents also.

Some limited success has been obtained in “burning off” unintentional core grounds using a dc or ac current source. This is a risky operation, and the current may cause additional damage. The current source is normally limited to 40 to 50 amps maximum and should be increased slowly so as to use as little current as possible to accomplish the task. This should only be used as a last resort and then only with consultation from the manufacturer, if possible, and with others experienced in this task.

Table 17.—Transformer Test Summary Chart

Part to be Tested	Test to be Performed
Windings	Resistance Across Windings Turns Ratio/Polarity/Phase Excitation Current at All Tap Positions Short Circuit Impedance Insulation Resistance to Ground (megohmmeter) Capacitance (Doble) Power Factor/Dissipation Factor (Doble) Induced Voltage/Partial Discharge/Riv
Bushings	Capacitance (Doble) Dielectric Loss (Doble) Power Factor/Dissipation Factor (Doble) Partial Discharge (Doble) Temperature (Infrared) Oil Level (Sight Glass) Visual Inspection (Cracks and Cleanliness)
DGA Insulating Oil	Dissolved Gas Analysis Dielectric Strength Interfacial Tension Acid Number Visual Inspection Color Water Content Oxygen Inhibitor Power Factor/Dissipation Factor
Tap Changers - Load	Contact Pressure and Continuity Temperature (Infrared) Turns Ratio at All Positions Timing Motor Load Current Limit Switch Operation and Continuity
Tap Changers - No Load	Contact Pressure and Continuity Centering Turns Ratio at All Positions Visual Inspection
Core	Core Insulation Resistance to Tank Ground Test (megohmmeter)
Tanks and Associated Devices	Pressure/Vacuum/Temperature Gages - Calibration Temperature (Infrared) Visual Inspection (Leaks and Corrosion)
Conservator	Visual Inspection (Leaks and Corrosion)
Air Drier Desiccant	Proper Color Valves in Proper Position
Sudden Pressure Relay	Calibration and Continuity
Buchholz Relay	Proper Operation and Continuity
Cooling System	Temperature (Infrared)
Heat Exchanger Radiators	Clear Air Flow Visual (Leaks, Cleaning, and Corrosion)
Fans	Controls Visual Inspection and Unusual Noise
Pumps	Rotation and Flow Indicator Motor Load Current

REFERENCES

1. IEEE Standard C57.12.01-1989 Standard General Requirements for Dry-Type Distribution, Power, and Regulating Transformers (ANSI).

2. IEEE Standard C57.12.00-1993 Standard General Requirements for Liquid-Immersed Distribution, Power, and Regulating Transformers (ANSI).

3. Power Transformer Maintenance and Testing, General Physics Corporation. 1990.

4. Guidelines for the Life Extension of Substations EPRI, TR-105070. April 1995.

5. Transformer Maintenance Guide, by J.J Kelly, S.D. Myers, R.H. Parrish, S.D. Meyers Co. 1981.

6. Transformer General Gasketing Procedures, by Alan Cote, S.D. Meyers Co. 1987.

7. NFPA 70B-1998 Recommended Practice for Electrical Equipment Maintenance.

8. Bushing Field Test Guide, Doble Engineering Company. 1966.

9. Testing and Maintenance of High-Voltage Bushings, FIST 3-2, Bureau of Reclamation. 1991.

10. IEEE Standard C57.19.00, 1991 General Requirements and Test Procedure for Outdoor Power Apparatus Bushings.

11. IEEE Standard C57.104-1991 Guide for the Interpretation of Gases Generated in Oil-Immersed Transformers.

12. International Electrotechnical Commission (Draft IEC 60599 Edition 2), Mineral Oil-Impregnated Electrical Equipment in Service-Interpretation of Dissolved and Free Gas Analysis. 1997.

13. Dissolved Gas Analysis of Transformer Oil, by John C. Drotos, John W. Porter, Randy Stebbins, published by the S.D. Meyers Co. 1996.

14. IEEE Standard C57.94, 1982, Recommended Practice for Installation, Application, Operation and Maintenance of Dry-Type General Purpose Distribution and Power Transformers.

15. Criteria for the Interpretation of Data for Dissolved Gases in Oil from Transformers (A Review), by Paul Griffin, Doble Engineering Co. 1996.

16. Maintenance of High Voltage Transformers, by Martin Heath Cote Associates, London, England. 1989.

17. Thermal Monitors and Loading, by Harold Moore, from Transformer Performance Monitoring and Diagnostics EPRI. September 1997.

18. IEEE and IEC Codes to Interpret Incipient Faults in Transformers, Using Gas in Oil Analysis, by R.R. Rogers C.E.G.B, Transmission Division, Guilford, England. Circa 1995.

19. IEEE Standard 62-1995, IEEE Guide for Diagnostic Field Testing of Electrical Power Apparatus, Part 1: Oil Filled Power Transformers, Regulators, and Reactors.

20. FIST 3-5 Maintenance of Liquid Insulation: Mineral Oils and Askarels. 1992.

21. ANSI/ASTM D 971-91, Standard Test Method for Interfacial Tension of Oil Against Water by the Ring Method.

22. EPRI Substation Equipment Diagnostics Conference VII, Experience with In-Field Water Contamination of Large Power Transformers, by Victor V. Sokolov and Boris V. Vanin, Scientific and Engineering Center "ZTZ Service Co.," Ukraine. 1999

23. Doble Engineering Company "Reference Book on Insulating Liquids and Gases" RBILG-391. 1993.

24. ANSI/IEEE C57.92-1981, Guide for Loading Mineral Oil Immersed Transformers.

25. Doble Engineering Company Client Conference Minutes 1998 Insulating Fluids No. 65PAIC98.

26. IEEE P1258, Trial-Use Guide for the Interpretation of Gases Generated in Silicone-Immersed Transformers. 1999.

27. ASTM D-1933-97. Standard Specification of Nitrogen Gas as an Electrical Insulating Material.

28. ASTM D-3487-88, Standard Specification for Mineral Insulating Oil Used in Electrical Apparatus.

29. ASTM D-5837-96, Standard Test Method for Furanic Compounds in Electrical Insulating Liquids by High Performance Liquid Chromatography.

30. ASTM F-36-99, Standard Test Method for Compressibility and Recovery of Gasket Materials.

31. ASTM D-2240-97, Standard Test Method for Rubber Property – Durometer Hardness.