FACILITIES INSTRUCTIONS,
STANDARDS, & TECHNIQUES
VOLUME 2-5

TURBINE REPAIR

Internet Version of This Manual Created
September 2000

FACILITIES ENGINEERING BRANCH
ENGINEERING DIVISION
DENVER OFFICE
DENVER, COLORADO

The Appearance of The Internet Version of This Manual May Differ From the Original, but the Contents Do Not

UNITED STATES DEPARTMENT OF THE INTERIOR
BUREAU OF RECLAMATION

Revised April 1989 by

William Duncan, Jr.

Senior Mechanical Engineer

Back to Main Index

CONTENTS

Section Page

1. Introduction 1

2. Runner Materials 1

3. Cavitation 4

4. Cavitation, Mitigation, and Repair Procedures 4

4.1 Approach 4

4.2 Frequency of Inspection and Repair 6

4.3 Cavitation Damage Inspection 8

4.4 Cause of Pitting 10

4.5 Decision on Best Approach to Repairs 11

4.6 Repair Methods 13

4.7 Runner Modifications 26

4.8 Personnel for Cavitation Pitting Repairs 27

4.9 Documentation Forms 28

5. Crack Repair 28

6. Welding Electrodes 28

7. Grinding 29

8. Seal Rings 31

9. Wicket Gate Repair 33

10. Paint 34

11. Guide -Bearing Rebabbitting 35

References 36

Tables 37

Figures 47

Forms 63

1. INTRODUCTION

The purpose of this bulletin is to provide field personnel with a basic guide to the repair of hydraulic turbine runners and large pump impellers.

Reclamation operates and maintains a wide variety of reaction and impulse turbines as well as axial flow, mixed flow, radial flow pumps and pump-turbines. The recommendations in this bulletin are to be used as guidelines to help develop specific repair procedures which may be unique to a given unit and field situation.

Unless otherwise specified discussions and recommendations concerning turbines and runners can also be assumed to be applicable to large pumps and impellers.

2. RUNNER MATERIALS

Older runners in Reclamation service are commonly cast steel conforming to the requirements of Federal Specification QQ-S-681 class 2. This specification specified a chemical requirement of 0.35 C, 0.7 Mn, 0.05 P, 0.06 S, 0.60 Si, 0.50 Cu, and 0.50 Ni. Physical requirements included a tensile strength of 65,000 lb/in^2 and a yield strength of 35,000 lb/in^2.

Newer runners and impellers are manufactured as one-piece castings, cast components welded together, fabricated components welded together, or a combination of cast and fabricated components welded together. In addition, areas of the runner may be weld overlaid with cavitation resistant material.

The basic design of the runner will be a function of the state-of-the-art of materials science, the cost of materials, fabrication and foundry costs, and the anticipated duty of the machine.

The following is a description of materials commonly used for turbine construction reprinted from EPRI AP-4719. (1)

"Carbon Steel Pipe

"Specification: ASTM A285 - Grade B; ASTM A516 - Grade 65, 70, 75; ASTM A283 (for draft tube liner); and ASTM A36 (for draft tube liner).

"Application: These materials are used on all turbine components of plate steel construction. They are low to intermediate strength materials and have cavitation resistance which is typical of carbon steel.

"Carbon Steel Castings

"Specification: ASTM A27 - Grade 65-35 or 70-40; and ASTM A216 - Grade WCC.

"Application: These materials are commonly used for turbine runners and wicket gates. Although steel castings have been used on other components such as headcovers, discharge rings and stay rings, most of these turbine parts are not of fabricated construction. ASTM A216 castings are of slightly higher strength than the more commonly used ASTM A27 material. ASTM A216 material is therefore used where increased mechanical strength is required.

"Stainless Steel Plate

"Specification: ASTM A167 - Type 304; ASTM A240 - Type 304

"Application: This material is used on all turbine components of stainless steel plate construction. The material is an 18-8 austenitic stainless steel, easily weldable and with strength equivalent to low strength carbon steel.

"Stainless Steel Castings (Martensitic)

"Specification: ASTM A487 - Grade CA-6NM; and ASTM A743 Grade CA-6NM.

"Application: CA-6NM castings are commonly used for turbine runners and wicket gates. The material is a 13-4 martensitic stainless steel developed in the early 1960's as an alternative to CA-15 stainless steel. The CA-6NM has better casting behavior and improved weldability over CA-15 stainless steel. Nevertheless, when welding CA-6NM, relatively high preheat and postweld heat treatment is (sic) required to prevent cracking if martensitic weld material is used. Field repairs with austenitic weld material are feasible with minimal preheat and no postweld heat treatment; however, the deposited material does not have the same strength as the CA-6NM base.

“This material is of relatively high strength, and has a cavitation resistance comparable 304 stainless plate.

"Because of the relatively low chromium and nickel content, the material is subject to pitting in salt water or a similarly corrosive environment. In some installations, corrosion of CA-6NM material is believed to be a result of

contamination of the material surface during the manufacturing process. For salt water application, a higher chromium content martensitic stainless steel (16-5) has been developed. This material does not have an ASTM designation, however, has similar strength and cavitation characteristics as the CA-6NM material.

"Stainless Steel Castings (Austenitic)

"Specification: ASTM A487 - Grade CF-3, CF-3M, CF-8, CF-8M; and ASTM A743 - Grade CF-3, CF-3M, CF-8, CF-8M.

"Application: This material is an 18-8 austenitic stainless steel and is also used for runners and wicket gates. Castings from this material are easily field welded and are more corrosion-resistant than the CA-6NM stainless steel. However, the austenitic material is lower in strength than CA-6NM and 16-5 martensitic stainless steel and is more costly because of the higher nickel content and increased casting difficulties; therefore, CA-6NM castings are more frequently used.

"Stainless Steel Overlay

"Specification: E308, E308L, E309, E309L.

"Application: Stainless steel welded overlay using 308 or 309 austenitic stainless weld material is common on cavitation-prone areas of carbon steel turbine components. The overlay is usually I/8 inch (3 mm) or
3/16 inch (5 mm) minimum thickness and has cavitation resistance equal to or better than stainless steel castings and plate.

"309 is used in deeply pitted areas as a first pass over the carbon steel to reduce the possibility of weld cracking.

"Aluminum Bronze Castings

"Specification: ASTM B148- Grade 955.

"Application: This material may be used as an alternative to cast stainless steel and has comparable cavitation resistance. However, aluminum bronze is lower in strength and large castings are higher in cost. Also, out-of-position welding is difficult, causing problems for in-place repair work. Aluminum bronze use is restricted to smaller runners and, more commonly, to pump impellers.

"For saltwater application the aluminum bronze offers increased corrosion resistance over CA-6NM stainless steel.

3. CAVITATION

Examination of the runner of a hydraulic turbine or the impeller of a pump often discloses pitted areas in various stages of development. Pitted areas may also be found on turbine or pump water passage surfaces where water velocities are high. This damage is generally termed cavitation erosion or impingement erosion. Because of various physical conditions present in the waterflow system, a cycle of cavitation is induced as follows:

a. Extreme low pressure areas are produced by flow irregularities.

b. Pockets or "cavities" of vapor form.

c. Pressure and flow conditions change abruptly.

d. The pockets or "cavities" collapse causing high shock pressures.

e. Where the collapse occurs adjacent to a metal surface, the resultant impact tears out bits of the metal.

The cycle occurs at a very high frequency. As the metal surface deteriorates, the damage rate accelerates rapidly. Without timely repair, the cavitation process can result in the total destruction of the surface under attack.

4. CAVITATION REPAIR

The following sections 4.1 through 4.8 have been reprinted by permission from EPRI AP-4719. (2)

4.1 "APPROACH

"The repair of cavitation pitting damage on turbines is an essential part of a hydro plant maintenance program. If left unrepaired, or if improperly repaired, the extent of damage will increase, usually at an accelerating rate, eventually leading to an extended and costly outage of the unit.

"An effective repair program can minimize the adverse problems associated with cavitation pitting. The main objectives of such a program are:

- Restoration of runner and other components within the turbine water passages to "as new" condition;

- Correction of any profile errors or irregularities which are responsible for the pitting; and

- Avoidance of blade shape distortion and its affect (sic) on further damage.

"As with any equipment, excessive repairs to a turbine can lead to reduction in its performance and useful operating life. Extensive weld repairs can result in runner Blade distortion, acceleration of further cavitation damage, and possible reduction of turbine efficiency. Also, extensive repair can cause residual stressing in the runner resulting in structural cracking at areas of high stress.

"To maximize equipment life and to maintain high availability and good operating efficiency, cavitation pitting repairs should be done in a logical and methodical manner. The basic steps of such a repair program are as follows:

- Inspection
- Identify cause of pitting
- Plan best approach to repairs
- Perform repairs

"Thorough periodic inspection of equipment within a preventive maintenance program is a prerequisite to long-term reliability, and routine inspection for cavitation damage is no exception to this concept. Additionally, clear and concise inspection records assist in reporting the causes of cavitation pitting and monitoring the effectiveness of repair programs.

"Identifying the cause of cavitation pitting on turbine equipment is often a significant step toward mitigating the problem. In many cases, identification will be difficult and may not be conclusive; nevertheless, some attempt at ascertaining the cause of the damage is warranted and should not be overlooked.

"Prior to making repairs, consideration should be given to the options available for doing the work. There are two general approaches:

"One is to restore the runner to original profiles; and the other is to perform runner modifications to eliminate or reduce the cause(s) of the

damage. Restoration to original profile is the most straightforward approach; however, in the long term, profile modifications will likely have increased benefits.

"Once an approach to repair is established, implementation of the work using proper procedures and high quality workmanship will maximize the effectiveness of the repair program.

"Cavitation pitting repairs are discussed in the subsections below and guidelines and recommendations for repair work are given. While many plant owners undoubtedly have implemented effective repair programs which differ from that presented herein, the discussion is intended to provide a reference for undertaking work of this nature.

4.2 FREQUENCY OF INSPECTION AND REPAIR

"Cavitation Damage Inspections

"Periodic inspection of a turbine for cavitation damage is an important part of turbine maintenance. Frequent inspections are particularly important during the initial period for operation of a new turbine or new runner, as they will enable cavitation damage to be detected at an early stage and remedial measures to be effected before pitting becomes extensive. When a new turbine is placed into operation, the unit should be inspected after about 1500, 4000, and 8000 hours of operation. For pump-turbines, this frequency should be 750, 1500, and 3000 hours because of the potential for more severe cavitation pitting during pump operation. For these inspections, a hydraulic engineer from the turbine manufacturer should be present to inspect any areas of cavitation pitting and to report on the cause of the damage and possible remedial work to mitigate the damage.

"Subsequent to the initial inspection program, the frequency of future inspection should be dictated by the extent of damage which is occurring. For units which are experiencing minimum damage, the period between inspection can be increased. However, the frequency of inspection should not be less frequent than:

Turbines . . . . . every 24,000 operating hours
or every 4 years

Pump-turbines . . . . . every 12,000 operating hours
or every 2 years

"Operating and maintenance experience, other than cavitation damage, may dictate a more frequent inspection (e.g., blade cracking, seal wear). Also, a more frequent inspection is warranted when making runner profile modifications so as to adequately monitor the effectiveness of the changes.

"Cavitation Repairs

"The frequency of turbine cavitation repairs will vary from plant to plant. The time between repairs will depend upon the rate of metal removal, the plant owner's philosophy for repairs, and other indirect factors.

"Approaches for cavitation repair as developed by plant owners are:

> Make all repairs each inspection period. Many plant owners believe that this is good practice from a preventive maintenance point of view.
>
> Repair only areas where cavitation damage is I/8 inch (3 mm) or deeper. Preparation of damaged areas even with only light surface "frosting" is usually done to a depth of at least 1/8 inch (3 mm).
>
> Repair areas on stainless steel overlay where pitting is 1/8 inch (3 mm) or deeper. On carbon steel, repair areas even with light damage using stainless steel weld material.
>
> Allow cavitation to progress to the maximum depth which can be repaired with two weld passes (about 3/8 inch [10 mm]).
>
> Make repairs only when damage becomes so bad that it threatens to impair the strength of the turbine or when preparation of the damaged area may result in holes completely through the runner blade.

"Indirect factors which influence scheduling of repair work include:

> Availability of maintenance personnel
>
> System operating conditions such as requirements for peaking or standby capacity, transmission limitations, and unscheduled outages of other units

"It is not possible to give specific recommendations for frequency of cavitation repairs because each plant or unit should be evaluated on an individual basis.

In deciding on whether or not to make repairs, the following factors should also be considered:

The repair cost per pound of weld material will decrease as the amount of material increases because of fixed set-up time. This favors a longer period between repairs. However, if the cavitation pitting characteristics are such that cavitation damage tends to accelerate, increasing the time between repairs may substantially increase the amount and cost of repairs which must be made.

If the time between repairs is lengthened, additional care will be needed to prevent distortion because of the increased amount of weld material to be added. Blade distortion may adversely influence unit performance and may reduce the life of the runner.

If repairs are made on a more frequent basis, they may be completed within the time frame required for other maintenance work on the unit. If repairs are delayed, an extended outage or a specific outage for cavitation repairs may be necessary, resulting in reduced availability and of possible lost generation or capacity benefits.

"An economic evaluation of the optimum repair frequency should consider the following costs:

Unwatering and dewatering the unit

Setting up and removing of the runner maintenance platform

Labor and supervision for repair

Material

Lost revenue due to downtime

4.3 "CAVITATION DAMAGE INSPECTION

"Cavitation damage inspection should be made from both the draft tube area below the runner and from the stay ring/wicket gate area in the spiral (or semi-spiral) case.

"Inspection from the draft tube area should normally be done from a temporary maintenance platform installed below the runner. On units greater than about 12 foot (3.7 m) diameter when no repairs are planned, draft tube inspection

may be made from a portable boat floating in the draft tube while water level is maintained below the bottom of the draft tube access door. Most areas of the runner which are susceptible to cavitation damage can be seen from the draft tube side. The leading edge of the blades, however, can best be inspected from the wicket gate area. On small units where access to the runner from the wicket gate area is poor, a polished metal mirror can be used for observing the leading edge area from the draft tube side.

"Adequate lighting is necessary for a thorough inspection--the stronger the light source the better. When the runner erection platform is in place, photographic-type lighting is optimum. For the wicket gate area, large portable battery powered lights are usually sufficient. A drop-cord-type light is also suitable for difficult areas. For safety, ground fault detectors are necessary in the power supply to the turbine water passages. Alternately, a low voltage direct current power source should be used.

"The inspection should be thorough, covering not only the runner, but the draft tube liner, discharge ring, wicket gates, bottom ring, and headcover. The runner blades should be permanently numbered. The wicket gates may be identified by referencing them to the baffle vane.

"It is recommended that a checklist be prepared to ensure that all parts of the turbine are inspected, and that all areas of cavitation damage be recorded on sketches or in tabular form. The records should include the following:

Date of inspection

Number of hours of operation and the generation (kWH) since the previous repairs and/or inspection

Operation limits (i.e., net head, tail-water level, low flows, and any incidence and duration beyond these limits

Overall area of each area of pitting, as well as the average depth and maximum depth

Dimensions of damaged areas from the leading and trailing edge of the blades

Photographs of the damaged areas and of subsequent repairs

"When taking photographs, the blade number, the date of the inspection, and dimensions of the pitted area should be clearly marked on the blade for reference.

4.4 "CAUSE OF PITTING

"An important step in any effort to minimize cavitation damage is to identify the cause of the pitting. This requires careful examination of the extent and location of the pitting as well as a review of the operating history of the unit including operating heads and loading of the machine. Tables 4-1, 4-2, and 4-3 summarize typical locations of cavitation damage on propeller and Kaplan turbines, Francis turbines, and pump-turbines, respectively, and identify possible causes of the damage.

"In analyzing cavitation damage, first check for local discontinuities in blade shape or profile in the area immediately upstream of the damaged surface. Also check whether or not the cavitation patterns are the same on each of the blades. If damage varies from blade to blade and there are no apparent discontinuities upstream, the problem may be on the overall blade profile or blade location. In this case, a template should be made of a cavitation-free blade or the one with the least pitting, and this template used to check the overall profile of the other blades for possible modifications. If the pattern of damage is very similar from blade to blade, and local profile discontinuities are not evident, the problem becomes more difficult and other factors such as method of operation, operating heads, etc., must be considered.

"The possibility that damage is not the result of cavitation should be investigated:

> Damage may be from corrosion, particularly if water has high oxygen content or high dissolved solids.
>
> On carbon steel runners with stainless steel overlay, damage at the interface of carbon steel and stainless steel is likely to be partially due to galvanic action.
>
> Large voids beneath overlay are caused by galvanic corrosion which will occur when there is a small hole in the overlay. The hole may be a defect in the weld overlay or from cavitation pitting which has penetrated the overlay.
>
> If water contains large amounts of entrained solids, the damage may be caused by physical erosion rather than cavitation pitting.

"Input from the turbine manufacturer's hydraulic engineer in assessing the cause of pitting is always valuable. This is one reason for inspection at an early stage of operation. Even if damage is far less than the guaranteed amount, the manufacturer should be asked to report on the cause of the damage.

4.5 "DECISION ON BEST APPROACH TO REPAIRS

"After inspecting and assessing the cause of damage, a plan on the best approach for cavitation repairs must be developed.

"The first decision which must be made is whether to complete repairs during the current outage or to delay repairs for a future inspection period. This will depend on the plant owner's normal frequency of inspection and repair, and the actual extent of damage which is experienced. Repairs should not be delayed if:

> Further delay will result in added repair costs because of the accelerating rate of cavitation pitting.
>
> Damage is approaching 20 percent of blade thickness or 1/2 inch in depth, whichever is less.
>
> Welders must be mobilized for other work on the runner such as crack repair.

"Often, the outage time needed to complete the repairs will influence the decision on whether or not to make repairs. The demand to return the unit to service in as short a time as possible may make it possible to repair only areas of severe damage, leaving areas of frosting and minimal damage for the next inspection outage. Temporary repairs may also be made using non-fused materials.

"Even if it is decided to postpone repairs, local discontinuities upstream of the area of damage should be blended smooth by grinding to reduce the rate of further pitting.

"When the decision is reached to proceed with cavitation pitting repairs, it is necessary to determine the method to be used for repairs and whether or not blade profile corrections should be made. The various methods for undertaking repairs include:

> Fill damaged area with weld material
> Fill damaged area with non-fused materials
> Weld plates over the damaged area
> Remove damaged section and replace with new forced plates welded in place

"The general applicability of these methods are summarized in Table 4-4.

"The most common, and usually the most successful, method for repair is to fill the damaged area with weld material. The following items should be considered when other repair methods are contemplated:

> Experimental testing to date has indicated that non-fused materials have less cavitation resistance than carbon steel. Therefore, except where a profile adjustment is made, the use of these materials cannot be considered a permanent repair.
>
> Welding plate over a damaged area is only suitable in areas of low stress and where there are no cyclic loading of vibration conditions.
>
> Replacing damaged areas with new formed plates should only be used in very severe and advanced cases of damage (i.e., holes through the blade), as this method could be rather costly to implement "in site."

"Restoration of the runner to its original condition is the most straightforward approach to repairs. By selecting a weld material of increased cavitation pitting resistance, it will always be possible to decrease the rate of pitting to some degree. In many cases, this is the only feasible method of repair, short of redesigning and replacing the turbine runner. A disadvantage is that the cavitation pitting problems may persist if the runner is restored to its original profile, requiring repeated repairs which will build up residual stress in the runner. Consequently, to reduce the incidence of repairs and prolong the operating life of the runner, attempts at runner blade shape or profile correction should be initiated when this is deemed feasible.

"Runner modifications require a thorough analyses and understanding of the cause of the cavitation pitting. Basically, four types of modifications may be necessary to reduce the damage:

> Leading edge modification
> Trailing edge modification
> Addition of anti-cavitation fins (on propeller and Kaplan turbines)

"Tables 4-1 to 4-3 outline possible methods of reducing or eliminating the damage.

"Some specific guidelines for runner modifications are presented later in this section. The following general guidelines should be observed:

> It is important that a well devised plan be made for any runner modifications, involving if necessary, changes made in small steps with more frequent inspection.

Input from the turbine manufacturer is invaluable in making runner modifications. Except for small adjustments, the changes may influence the performance of the machine. This is especially true for pump-turbines where blade modifications at the turbine welding edge will effect pump discharge and pump welding edge modifications will influence turbine performance.

Modifications to the blade welding edge to reduce cavitation on the one side will likely make the opposite side of the blade more susceptible to cavitation damage; therefore, changes must be made carefully.

4.6 "REPAIR METHODS

"Weld Repair

"General. Welding is the most common and, to date, the most successful method of repairing cavitation damage on hydraulic turbines. The various steps for repair by welding are as follows:

Initial dimensional checks
Application of braces of strongbacks Surface preparation
Preheat
Weld application
Grinding to contour
Weld inspection
Removal of braces and strongbacks Final dimensional checks

"In addition, prior to the start of weld repairs, the following must be established:

Composition of base material
Weld material
Weld process
Repair procedure

"Safety Considerations. As with other types of maintenance work, safety considerations must not be overlooked. The maintenance platform under the runner must be adequately designed for the equipment and personnel Loads to be handled during the repair program. Ventilation during welding is important. Wicket gates and spiral/semi-spiral case mandoors should be open and exhaust fans should be available for removal of smoke and fumes. Proper and adequate

lighting of high intensity should be provided. If weld procedure incorporates high pre- or post-heat, insulated blankets are necessary to protect the personnel.

"Composition of Base Material. When planning cavitation repairs, it is important to know the chemistry of the base material. For newer units, the ASTM specification is usually known. The exact composition may also be available from foundry/mill test records. If the composition of the material is not known, a chemical analysis should be made from a small sample of the runner or component being repaired.

"Weld Materials. The recommendations for weld materials for cavitation pitting are as follows:

> Turbine Components with Carbon Steel Base Material: Areas where the depth of weld after surface preparation is greater than 3/8 inch (10 mm) should be built up to 3/8 inch (10 mm) depth with E7018 mild steel weld material (low moisture type). The remainder of the area, including other areas with depth of 3/8 inch (10 mm) or less, should be filled with 300 series austenitic stainless steel material. The first pass of material over the carbon steel should be 309 stainless, the remainder 308 stainless.
>
> Stainless steel material should not be used in areas of deep cavitation because of the increased possibility of blade distortion resulting from the difference in coefficient of thermal expansion between the stainless and carbon steel.
>
> The increase ferrite level in 309 stainless reduces the possibility of hot-short cracking (micro fissuring), and for this reason 309 is used as a first pass over the carbon steel. For minor repairs where the plant owner does not wish to use two types of weld material, only 309 may be used.
>
> Martensitic Stainless Steel (CA-6NM): In areas of low stress levels (see Figure 4 -7) and also in area of high stress where depth of pitting does not exceed 10 percent of the material thickness, repairs should be made with 308 austenitic stainless steel weld material.
>
> In areas of high stress, where the depth of pitting exceeds 10 percent of the material thickness, the turbine manufacturer should be consulted for recommended weld materials. For this, a 410 Ni-Mo weld material may be appropriate because of similar chemical and physical properties as the base material. However, this material requires high preheat to prevent hydrogen-induced cracking and post-weld heat treatment at 1000 F (540 C) to temper the weld metal. Studies (1) have shown that repair with

15 Cr 25 Ni austenitic weld material and an overlay of a 50 percent cobalt-containing alloy will result in a repair with good physical and cavitation resistant properties without post-weld heat treatment. It should be cautioned that experience with this procedure is limited.

Austenitic Stainless Steel Materials (including overlay). The damaged areas should be repaired with 308 austenitic weld material.

"Weld Process. Two processes are used for cavitation repair welds:

Gas metal arc welding (GMAW) or MIG welding

Shielded metal arc welding (SMAW) or stick electrode

"The GMAW process has the following advantages:

More rapid application of weld metal.

Lower heat input; therefore the increased rate of weld material application should not increase the possibility of blade distortion.

If applied correctly, weld quality should be better, with no slag inclusion and reduced excess weld.

"There are, however, a number of disadvantages with this process, which would favor the SMAW method.

For applications of small amounts of weld (less than about 30 lb [14 kg]), the increased set-up time of the SMAW process will offset savings in time for application of the weld.

Overhead weldings is (sic) difficult with the GMAW process; therefore, this process is less suited for repairs on the underside of propeller and Kaplan runner blades.

The GMAW process is not suitable for areas such as the junction of the runner bucket to the band.

With GMAW process, special care in ventilation is necessary because excessive air movement will disperse the gas shield. However, insufficient ventilation will result in an accumulation of Argon gas in the work area creating a hazard to personnel. Air-supplied hoods are recommended for this method.

"Research is being done by the CEA on the use of the pulsed arc method of field repair with the gas metal arc welding process. This technique can provide more stable overhead and vertical welding when compared to the older spray transfer process.

"When selecting a weld process, the preference and experience of the welder should be considered. With the GMAW process in particular, lack of experience may offset any advantages of this process.

"Repair Procedures. The procedures developed for cavitation repairs are site specific because of the many factors involved. It is recommended that procedures be established for each repair program to maintain a consistent approach, to monitor the results and to avoid excessive costs in any one area of the program.

"These procedures should be modified to incorporate any changes which could benefit subsequent repairs. The items discussed below illustrate some of the important points which should be covered by the procedures.

"Initial Dimensional Checks. Prior to the start of cavitation repairs to a turbine runner, dimensional checks should be made. These will serve as a basis for determining whether or not weld distortion has occurred and also to establish whether or not any measures are necessary to correct distortion which may have occurred during a previous repair or during initial runner manufacture.

> Propeller and Kaplan Runners. The pitch angle of each blade should be recorded, using the bottom ring elevation of the top of the draft tube liner as a datum (see Figure 4-8).
>
> Vent checks of the discharge area of the runner should also be made. This check is made by measuring the closest distance between adjacent blades, at the discharge edge.
>
> Francis Runners. A vent check should be made as mentioned above for propeller and Kaplan turbines (See also Figure 4-9). From the vent measurements, the average opening between each pair of blades, the overall average opening, and a variance from average of each opening can be calculated. Corrective action should be taken if there is large variation in vent openings, particularly if oversize vent openings are grouped together on one side.

Pump-Turbine Runners. A vent check should be made as discussed above at both the turbine and pump discharge.

"Application of Braces and Strongbacks. If the amount of repair welding to a turbine runner is such that blade distortion may occur, braces or strongbacks should be applied on the side of the blade opposite the weld repair (i.e., usually on the pressure side). These braces or strongbacks are typically applied near the discharge edge. Typical examples are shown on Figures 4-10 and 4-11.

"Even though strongbacks and braces are temporary, proper weld procedures for their installation are important to minimize residual stresses and metallurgical changes in the runner material. Carbon steel weld material should be used for carbon steel runners, and austenitic 308 material for stainless steel areas. Preheat requirements discussed below for pitting repair also apply to application of strongbacks and braces.

“Surface Preparation. Surface preparation should be by grinding, chipping, or carbon arc gouging (air arcing) the damaged area to sound metal. Following carbon arc gouging, the prepared area should be ground to bright metal. Grinding is particularly important on martensitic stainless steel castings to assist in controlling the heat-affected zone from the carbon arc gouging, and should extend to 2 inches (51 mm) beyond the prepared area. For austenitic stainless steel, chipping is not recommended because this material will tend to work harden, making preparation more difficult.

"Preparation should extend to 1/4 inch (6 mm) to 1/2 inch (13 mm) beyond the edge of the damaged area. For application of a weld material different from the base material (e.g., stainless material on carbon steel), the edge of the preparation should be square cut to avoid a feather edge at the joint of the two materials.

“The prepared area should be visually inspected for defects. In high stressed areas (see Figure 4 -7), inspection using magnetic particle (on carbon steel or martensitic stainless steel) or dye penetrant (on austenitic stainless steel) procedures should be used.

"In areas within or adjacent to stainless steel overlay where it is planned to first build up the area with mild steel weld material, care must be taken to ensure that all stainless steel is removed from the area to be welded. The area and depth of stainless steel may be defined by etching with Nital or copper sulfate. Mild steel will show the effects of etching, whereas stainless steel will not.

"Preheating. Preheating is recommended under certain circumstances as part of good welding practice. The purpose of preheating is to prevent hydrogen-induced cracking; this type of cracking occurs after the weld has cooled and usually runs from the toe of the weld or from weld defects. Such a crack is difficult to detect and can be detrimental to the service life of the turbine, particularly if welds are located in highly stressed areas of the runner. The increased temperature from preheating increases the diffusion coefficient of hydrogen and bakes the hydrogen out of the weld. Preheating also allows a slower cooling rate of the weld preventing excessive loss of ductility in the weld and the heat-affected zone of the base metal.

"The amount of preheat depends on the chemical content of the base material, the thickness of the base material, the restraint and rigidity of the area being repaired, the actual heat input during the welding process, and the type of weld material. Preheat requirements are highly dependent on the extent of carbon in the base metal. Generally, the higher the carbon content, the lower the critical cooling rate and the greater the necessity for preheating.

Carbon Steel Weld Material and Carbon Steel Base Metal. The required minimum preheat may be determined from the carbon equivalent of the base material and the thickness of the material. Carbon equivalent is defined as the following:

$$Ceq = C + \frac{Mn}{6} + \frac{Cr + Mo + V}{5} + \frac{Ni + Cu}{15}$$

where: Ceq = Carbon equivalent - percent
C = Carbon content - percent
Mn = Manganese content - percent
Cr = Chromium content - percent
Mo = Molybdenun content - percent
V = Venadium content - percent
Ni = Nickel content - percent
Cu = Cooper content - percent

"Using this relationship, the required amount of preheat may be estimated from Table 4-6. Table 4-7 gives the minimum preheat for typical turbine materials based on the above formula for carbon equivalent and recommendations of Table 4-6.

"Austenitic Stainless Steel Weld Material on Carbon Steel Base Met{~l. The preheat requirements are less of austenitic stainless steel weld materials because of the ability of the austenitic material to absorb hydrogen, thus avoiding underbead cracking.

"Preheat temperatures may be 150 F (83 C) less than given above for carbon steel weld materials, however, should not be less than 60 F (16.C).

"Austenitic Stainless Steel Weld Material on Austenitic Stainless Steel. A nominal 60 F (16 C) preheat is necessary.

"Austenitic Stainless Steel Weld Material on M@rtensitic Stainless Steel (CA6NM). The minimum preheat should be as follows:

4 in. (102 mm) material thickness .....150 F (66 C)

4 in. (102 mm) material thickness .....250 F (121 C)

In restricted areas, preheat should be increased by 100 F (56 C).

Stellite 21 Weld Material. A nominal 60 F (16 C) preheat is necessary.

Preheating may be done using:

Oxy-acetylene torches (for small areas)
Propane or butane
Electric strip heaters with insulating blanket
Quartz lamps

Where there are large areas to be preheated, insulating blankets are needed to protect personnel during the subsequent welding. Preheat temperature should be monitored using a contact pyrometer or temperature-indicating crayons.

During preheating, care should be taken that the center of a blade is not heated in a small concentrated area. To allow for expansion of the material, heat should be applied starting from the outer edge of the blade.

Weld Application. Weld application should be aimed at achieving good quality weld with minimum residual stressing and also at keeping distortion to an absolute minimum. This can be accomplished by:

Apply no more than 1/8 inch (3 mm) weld material per pass.

Limit heat input to the runner. The maximum interpass temperature should be within 200 F (111 C) of the minimum preheat temperature. Temperature should be monitored with a contact pyrometer or temperature-indicating crayons. In addition, the area about 4 inches (102 mm) from the weld should not become to warm to touch.

Continuous check of distortion using:

-- Dial indicators

-- Measuring seal clearances

-- Use of templates

Apply weld using a cross pattern or a temper bead technique. Cross pattern welding should be arranged such that the final pass is in the direction of water flow.

Peen all passes except the top pass.

Apply post-weld heat stress relief.

"Grinding to Contour. Following the completion of welding, surfaces should be ground to their proper profile. Profile should be checked using a flexible spline about 2 feet (0.6 m) long. For large areas of repair, blade templates should be made. Figure 4-12 gives guidelines for blade profile. The recommended upper limit surface finishes are as follows:

Head	Surface Finish
< 300 feet (91 m)	250 u in. (6.3 u m)
300-1000 feet (91-305 m)	120 u in. (3.2 u m)
1000 feet (305 m)	90 u in. (2.3 u m)

"When a large area of stainless steel is being applied to carbon steel over areas greater than about 1 foot (0.3 m) square, witness holes should be ground through the stainless steel to ensure that the overlay is at least 1/8 inch (3 mm) in thickness. Grinding should extend slightly into the base metal and the holes etched with copper sulphate to establish the interface between the carbon steel base metal and the stainless steel overlay. Witness holes should be at about 18-inch (0.5 m) spacing. After checking overlay thickness, all witness holes must be welded and ground to the profile and finish of the surrounding overlay.

"Weld Inspection. Welds made for cavitation pitting repairs are generally unstressed from a structural point of view, therefore, soundness of the weld is not usually critical. Nevertheless, there have been many examples where small defects or holes in the stainless steel overlay on a carbon steel runner have led to large voids at the interface between the overlay and the parent metal. These voids are believed to be a result

of galvanic corrosion in the confined area under the overlay. Such damage can be minimized by achieving good quality repair welding.

"All repair welding should be given a thorough visual inspection. Dye penetrant examination should be 'conducted on any areas where the weld quality is fair to poor. If the plant owner is experiencing continual problems with voids forming below holes or defects in overlay, the complete overlay should be inspected with dye penetrant.

"Other areas where non-destructive testing should be used during cavitation repairs are:

> When a cavitation repair is completed over a crack repair, dye penetrant examination of the final surface should be performed.
>
> At the base of the prepared surface where the cavitation damage is in highly stressed areas, magnetic particle or dye penetrant examination should be performed.
>
> When making weld repairs with stainless steel plate, dye penetrant examination of the weld should be performed.

"Removal of Braces and Strongbacks. Immediately prior to and after removal of braces and strongbacks, reference measurements should be made to verify that the blades do not spring out of shape once the braces or strongbacks are removed. These measurements can include reference of the propeller or Kaplan runner blade to a fixed point on the discharge range or on a Francis turbine, a dial indicator mounted on the draft tube liner, runner band, or runner crown.

"Final Dimensional Checks. Final dimensional checks should include a repeat of those dimensions measured prior to the start of repairs. If templates are available or have been made, the template checks should also be made.

"If the power developed by the turbine is not to be decreased, then the vent opening after the repair should be equal to or greater than that measured prior to the repair. A tolerance of -0 to + 3 percent of total vent is recommended.

"On propeller and Kaplan runners, the blade angle should also be unchanged. A tolerance of -0 to + 1/2 degree is recommended.

"Repair of Discharge Minus (Propeller and Kaplan Turbines). Repair of cavitation damage on a propeller or Kaplan turbine discharge ring is a time consuming and

costly process. While the total weight of metal loss may be small, the cavitation usually covers a very large surface area requiring extensive application of weld.

"If cavitation pitting has progressed to a significant depth, it will be beneficial to machine the area of damage and then build up the discharge ring with stainless steel weld. This type of repair lends itself to a semi-automatic repair process with cutting tools and welding equipment mounted on the turbine runner.* For this work, a variable speed drive is attached to the turbine shaft to rotate the runner at low speed and a rotary joint and slip ring arrangement provided at the bottom of the runner to supply compressed air and electrical power to a working platform on the runner.

"For machining the discharge ring, a machining tool with compound adjustment is mounted on the runner periphery. After machining, the area is built up with weld rhaterial using GMAW weld machines mounted on the runner blades. Multiple weld heads can be used, each head mounted on a separate runner blade. Subsequent to the application of weld, the discharge ring must be re-machined to its original dimensions.

"Protection Against Galvanic Corrosion. On many runners of carbon steel construction with stainless steel overlay, a cavitation-galvanic corrosion phenomenon occurs at the boundary between the carbon steel and stainless overlay. The cavitation and the corrosion damage reinforce each other, resulting in an increased rate of metal removal. Some success has been reported with the use of protective coatings at the carbon/stainless interface with the coating acting as a barrier against galvanic corrosion. Materials which have been reported successful include Inerta 160, Intergard EXHB, Intertuf, and Carbomastic 15. These are epoxy-type coatings, and other equivalent materials are probably available.

"For a coating to be successful, it is necessary that the stainless extend to an area of relatively low cavitation. Otherwise the coating may be rapidly removed by cavitation, allowing the cavitation-corrosion process to progress. If the coating application is unsuccessful even with careful application, the failure is likely a result of high cavitation at the carbon-stainless interface.

---

*This process has been patented by D. Goings.

"Non-Fused Materials. Various non-fused materials have been used for cavitation damage repairs. These include:

Epoxies
Ceramics
Metal spraying
Neoprene
Urethane

"The application of these materials is far from an exact science and the success of this method of cavitation repair has generally not been good. The most commonly used materials are:

Belzona Ceramic Compound - Belzona R followed by an overcoat of Belzona S

Devcon - either Plastic Steel Putty, Stainless Steel Putty, or Wear Resistance Putty

"Plant owners may have other materials with which they have had success.

"Specific recommendations for application of non-fused materials must be obtained from the material supplier and these should be closely followed. The major difficulty with non-fused materials for cavitation pitting repair is achieving a satisfactory bond to the parent material. In this regard, general recommendations are as follows:

Ensure surface to which the material is to be applied is properly cleaned. This usually involves blast cleaning, followed by solvent cleaning as necessary.

Maintain temperature and humidity levels in the turbine area within recommended limits.

A rough surface is best for bonding of non-fused material to the parent metal; therefore, roughening the area with a grinding wheel is usually beneficial.

Allow sufficient cure time after the material has been applied, prior to rewatering of the unit.

"The recommendations for final surface profile are as presented for weld repairs.

"Care must be taken when welding in areas which were previously repaired with non-fused material. The heat may cause failure of any remaining material and may also produce toxic fumes.

"Repairs by Welding With Solid Plate

"General. Cavitation pitting may be repaired by welding solid plate over the damaged areas, however, this type of repair should be restricted to thick sections where stresses are low. Also, the repair should not be in an area which is subjected to vibration or dynamic loading.

"The same considerations as discussed previously for cavitation repair by welding will govern. However, as this type of repair will be applied to thick sections and the amount of weld will not be extensive (when compared to filling the damaged area with weld material), potential problems with distortion are reduced.

"Materials. Assuming the area to be repaired is carbon steel, the new plate should be 304 stainless steel and the weld material 309. This method of repair is not recommended for parent metals of stainless steel unless the repair is associated with a blade profile change or a change in the method of operating the unit. The repair will not be permanent unless cavitation intensity is decreased.

“Process. Considering the type of welding, the shielded metal arc process is most appropriate.

"Surface Preparation. Surface preparation should be by chipping, grinding, and carbon arc gouging as discussed previously for repair by welding. The prepared surface should be uniform in depth so that there will be contact between the plates and the prepared surface below. Areas of deep cavitation will require build-up with weld material to the depth of the surrounding surface. Surface preparation should be such that the plates will contact the base material over about 80 percent of their area.

"Preheat. Preheat requirements will be as discussed for repairs by welding.

“Application. Plate sizes must be cut to suit the area to be covered; however, in no case should be greater than 4 inches (102 mm) by 8 inches (203 mm), and should have two holes for plug welding near the middle. Plates 4 inches (102 mm) square should have one plug weld hole. The purpose of limiting plate size and to have holes for plug welding is to minimize the effective span of the plate, thereby increasing the strength of the repair.

“Plate thickness should suit the depth of the prepared surface, however, should not be less than 3/8 inch (10 mm). The edges of the plates should be beveled, and welding between plates should be full penetration (see Figure 4-13).

“Grinding to Contour. The surface finish and profile should be as discussed previously for weld repair.

“Inspection. The weld repair should be fully inspected by dye penetrant testing.

“Remove Damage Section and Replace with New Plates Welded in Place.

“General. The removal of a severely damaged section of a runner blade and replacement with a new plate is relatively common in both shop and field repair of turbine runners. When welded with full penetration welds and properly shaped to match the contour of the blade, this can be a very effective repair technique. For a carbon steel runner the new plate should be 304 stainless with 309 filler metal.

“The basic considerations and procedures as discussed previously for repair by welding will also apply to this method of repair. The weld is more structural in nature, therefore, increased inspection is warranted.

“Process. Either shielded metal arc or gas metal arc processes are suitable.

“Surface Preparation. Damaged blade sections should be burned away and the edges prepared for welding in the new plate. The new plate should be shaped as close as possible to the required final contour.

“Preheat. Preheat requirements will be as discussed for repairs by welding.

“Application. The weld should be fully penetrated and applied in multiple passes. Each pass should be peened, except for the root pass and final pass. Care must be taken in preventing blade distortion. One method is to preset the item for the expected distortion and allow the welding to bring the component into correct shape.

“Each weld pass should be visually inspected and a dye penetrant check made after the final weld is ground to contour.

“Grinding to Contour. The surface finish and profile should be as discussed previously for weld repairs.

4.7 "RUNNER MODIFICATIONS

"Runner Blade Leading Edge Cavitation

"Cavitation at the leading edge of the runner blade as a result of water not approaching the blade at the proper angle.

"The existence of one or more good blades with zero or minimal cavitation pitting is indicative of variation in blade angle or profile at the leading edge. In this case, the entrance angle and profile of the good blade should be checked relative to others. A template made from the good blade can be used for adjusting the leading edge of the other blades.

"If the location and extent of damage is about equal on all blades, then the problem is likely due to design or to operating conditions (i.e., incorrect head, excessive head variation, or operation at low load). Assuming the problem is related to design or due to incorrect head, the cavitation can be mitigated by gradual reshaping of the blades.

"Figure 4-14 shows typical reshaping of the leading edge of runner blades to reduce cavitation. In some cases, it may be necessary to add material to the opposite side of the blade to retain the structural integrity of the blade. Any adjustment to blade shape should be small and, at any one attempt, not more than 1/8 inch (3 mm) of blade thickness should be removed.

“Turbine Discharge Edge Cavitation

"Cavitation pitting at the discharge edge is usually a result of the edge thickness. Grinding the edge as shown on Figure 4-15, to achieve a more gradual taper, can serve to mitigate this problem.

"Installation of Anti-Cavitation Fins

"On propeller or Kaplan turbines where there is pitting on the runner periphery, or on the suction side of the blade immediately adjacent to the periphery, the problem may be mitigated by addition of anti-cavitation fins to the blade periphery. The fins are easiest to install with the runner removed; however, they may be added with the runner in place. Typical dimensions for anti-cavitation fin installation are shown on Figure 4-16. If possible, the installation of fins should be confirmed as being acceptable by the turbine manufacturer.

"On Kaplan turbines, where one-half or all of the discharge ring is cylindrical in shape rather than spherical, there will be a discontinuity (large gap) between the blade

periphery and the discharge ring. It is important that the anti-cavitation fin not extend too far into this area so as to disrupt the flow patterns across the runner.

"Air Injection

"Injection of air into the runner area either by natural aspiration or using low pressure compressors (blowers) is a possible method of reducing cavitation damage. The benefits of air injection, however, are somewhat questionable; and this approach should be discussed with the turbine manufacturer. Large quantities of air could reduce efficiency. Most successful use of air injection to reduce cavitation damage has been reported on propeller turbines.

4.8 "PERSONNEL FOR CAVITATION PITTING REPAIRS

"While there are several alternatives available for the actual repair process, the use of in-house personnel is usually preferable to work done by an outside contractor. An in-house team will usually be more dedicated to achieving a "perfect" repair particularly if the same personnel are to be involved in subsequent repair work. Outside contractors will be necessary when in-house personnel are fully committed to other maintenance tasks or because the repair work is too extensive to be handled by available personnel.

"The supervising engineer must be thoroughly familiar with causes of cavitation pitting and of repair methods and procedures, and should have carefully followed the history of the turbine repair over a number of years. It is also preferable that the same welders and grinders work on the unit during each repair to maintain continuity.

"Specific instructions should be given to the repair crew as to what work is to be done, and efforts should be made to ensure that personnel work as a unified 'team.' The extent and methods of repair must be clearly defined. Excessive carbon-air gouging will add to the amount of weld which must be placed, increasing cost, time and potential for blade distortion. Application of excess weld will significantly increase grinding time.

"Time should be taken to explain to the repair crew the causes of cavitation pitting on the unit which they are repairing; this will lead to increased care in the finished work. Also, suggestions from the repair personnel should not be ignored.

"The number of repair personnel will depend on the size of unit, the extent of repair, the criticality of returning the unit to service, and the availability of repair personnel. Grinding time is generally slightly longer than the actual weld time. Usually four

grinders are required for every three welders; personnel should be allocated in that basis.

"On large units the runner may be divided into isolated sections by hanging canvas tarpaulins between the blades. This will allow simultaneous repair on several blades without interference between welders and grinders.

"Multiple shifts may be used to separate the welding and grinding work and also to reduce the overall unit down time."

4.9 DOCUMENTATION FORMS

Standard Reclamation forms are available for recording runner damage and repairs. These forms include P.O. and M. 160 for long buckets and clockwise rotation, P.O. and M. 161 for long buckets and counterclockwise rotation, and P.O. and M. 162 for short buckets.

5. CRACK REPAIR

Cracks may appear which are caused by localized residual stress or solid objects striking the blades of the unit. Records should be kept on the locations and lengths of these cracks. A crack can relieve the residual stress and no further cracking will develop. Holes drilled at the ends of the crack, a procedure known as stop drilling, will often arrest the growth of the crack.

As a general rule, welding of runner cracks should not be attempted unless the structural integrity of the runner is questionable. Welding can lock stresses in the runner that will eventually cause more severe cracking. The Hydroelectric Research & Technical Services Group, D-8450, should be consulted before crack repair welding is attempted.

6. WELDING ELECTRODES

The American Welding Society classification of mild and low alloy steel electrodes and filler rods uses a four- or five-digit number with a prefix of either "E" or "R." The "E" stands for electrode and signifies arc welding. The "R" stands for rod and signifies gas welding. The first two or three digits indicate the minimum tensile strength. For example, an E6018 electrode has a minimum tensile strength of 60,000 lb/in2 (4.14 x 108 N/m2), and an El1018 electrode has a minimum tensile strength of 110,000 lb/in2 (7.58 x 108 N/m2). The next to last digit indicates which welding position the electrode can be used for. A "1" in this position indicates an electrode that can be

used in all positions, a "2" can be used only for flat and horizontal welds, and a "3" can only be used for flat welds. The last number can range from "0" to "8"; it indicates the type of covering on the electrode and the type of power supply that can be used.

All welding electrodes' should be stored in a clean, dry place. Many of the electrode coatings have a special affinity for moisture and must have special protection if sound welds are to be produced. Such rods should be stored in a heated oven and removed only 30 to 45 minutes before use. A rod that has been exposed to moisture can be dried out by following the manufacturer's recommendations.

Some of the electrode coatings contain fluoride compounds that can irritate the nose and throat of the welder. Therefore, the welding area should be well ventilated, and the welder should position himself so that he will not inhale the welding fumes.

Stainless steel electrodes or filler rods have the prefix "E" or "R" followed by a three-digit number, with either a "15" or "16" at the end. The three-digit number indicates the type of stainless steel. A "15" at the end indicates an electrode for use with dc current only, and a "16" indicates an electrode for use with either ac or dc current. For example, "E308-15" signifies an electrode that is 308 stainless steel used only with dc current.

7. GRINDING

Proper finish grinding of welded areas usually involves more time than the welding itself. This time can be decreased considerably by obtaining a smooth weld with the correct amount of fill material, selecting the correct grinding wheel, and using the correct grinding wheel speed.

The following is an example of a grinding wheel marking, broken down for interpretation:

51- A- 36- L- 5- V-23

51 - This is a prefix used by the manufacturer to indicate the type of abrasive. Its use is optional.

A - This letter is used to indicate the type of abrasive. "A" stands for aluminum oxide; "C" stands for silicon carbide.

36 - This number represents the grain size of the abrasive in the wheel. These numbers range from 10 for coarse to 600 for very fine.

L - This indicates the grade or hardness of the grinding wheel and is a measure of the strength of the bond material. The letters range from A for soft to Z for hard.

5 - This indicates the type of structure or the relative spacing of the grains in the wheel; the larger the number, the more open the spacing. Its use is optional. The omission of this number indicates that the wheel was not made of only one structure.

V - This indicates the bond type used for the wheel abrasive.

23 - This is the manufacturer's private marking. It is used to identify variations of a grinding-wheel composition. Its use is optional.

Two types of abrasives are normally used for grinding wheels, aluminum oxide and silicon carbide. Aluminum oxide is softer than silicon carbide and is suitable for most applications. Silicon carbide is used for cast iron, bronze, and for very hard materials. **Never use silicon carbide on stainless steel. Aluminum oxide should be used for grinding stainless steel and cast steel.**

The type of bond to be used depends on the final surface finish required, the amount of material to be removed, and the type of grinding wheel. Resinoid-bond wheels are best suited for the removal of small amounts of material and for obtaining very fine finishes. However, the vitrified-bond wheels are the most common type and are used for most general grinding.

The grade, or hardness, of a grinding wheel depends on the strength of the bond. The stronger the bond, the harder the wheel. The grade needed depends on the material - normally, hard wheels are used for soft work materials, and soft wheels are used for hard work materials.

The grain size selection depends on the finish required and the rate of material removal desired. A coarse grain size provides a fast rate of material removal but a rough finish. If a fine finish is required, a finer grain should be used. Usually a fine-grained wheel has a dense structure, and a coarse-grained wheel has an open structure.

The grinding-wheel speed is important for the safety of the operator. Wheel speeds vary from 4,500 to 16,000 surface ft/min (1,371 to 4,877 surface meters/min), depending on the strength of the bond used. Most surface grinding is done in the speed range from 5,500 to 6,500 surface ft/min (1,676 to 1,981 surface meters/min). Never use a grinding wheel at a speed higher than that recommended by the

manufacturer. To determine the surface speed of a grinding wheel, use the equation below:

$$\text{Surface speed} = \text{sfpm} = \frac{\text{rpm} \times D}{12}$$

where:

rpm = speed of the grinder (revolutions per minute)
D = diameter of the wheel in inches

The selection of the grinder requires consideration of several factors. The grinder should be lightweight and small enough to fit where the grinding will be done. The grinder should be capable of running at a speed that will give the required surface speed of the wheel. The availability of the type of power, such as electricity or air, required to operate the grinder should also be considered.

All wheels should be carefully inspected for defects before use. A simple "ring" test, where the wheel is suspended and tapped with a nonmetallic object, may be used. If the wheel sounds cracked, do not use it. Wheels should be handled carefully - if a wheel is dropped, it should not be used. Wheels should be installed properly. Check that all flanges and mounting nuts are in the correct places. New wheels should be run for 1 minute before use. Cold grinding wheels should be loaded gradually to reduce the chance of breakage. Operators should always wear eye protection and should not stand directly in front of the work.

8. SEAL RINGS

Turbine seal ring replacement is usually scheduled to coincide with major unit overhaul or uprating requiring disassembly. Generally seal ring replacement is required before seal clearances reach 200 percent of design clearances. As seal ring clearances increase beyond 200 percent, significant efficiency losses can be expected as well as changes in the hydraulic downthrust of the unit which can lead to bearing damage.

Standard practice in Reclamation is to select dissimilar materials for stationary and rotating rings to resist galling and seizure in the event the rings make contact. The materials selected must also have good cavitation erosion, corrosion, and abrasion resistance.

Although various material combinations are possible the most successful combination for general service has been:

Stationary ring: Nickel Aluminum Bronze, UNS C95500

Rotating Ring: Austenitic Stainless Steel, UNS S30400

Due to their dimensional stability, single-piece castings or ring-rolled forgings have proven to be most successful in resisting premature failure due to fatigue of the rings or the fasteners holding them in place.

A variety of stationary seal ring designs common in Reclamation powerplants have provided trouble free service. The basic features of these designs are:

1. A thin single piece cast bronze alloy ring shrunk in place in a steel retainer.

2. Thin bronze alloy ring segments factory welded and machined to form a single piece fabricated ring and shrunk in place.

3. A cast bronze alloy single piece integral ring and retainer.

4. A cast bronze alloy integral ring and retainer cast and assembled in four 90 degree sections.

5. A weld overlay of bronze alloy on the inside diameter of an existing steel retaining ring.

When procuring new stainless steel runners, Reclamation practice is to specify seal ring surfaces integral with the runner bands instead of providing separate replaceable seal rings. The surfaces are specified to have sufficient thickness and strength to allow a cleanup cut during future overhauls in which a stationary ring with a smaller inside diameter would be installed to close the seal clearances.

WHEN BORING STATIONARY SEAL RINGS, THE UNIT CENTERLINE MUST BE ACCURATELY DETERMINED. Usually this can be accomplished by hanging a single tight wire through the unit and locating centering points at several elevations through the turbine and draft tube to insure the boring bar is set plumb and concentric with the turbine bearing and the generator stator. Generally stationary seal rings are bored to be concentric with each other and the centerline of the unit to within 0.1 multiplied by the diametrical seal ring clearance.

WHEN FIELD MACHINING SEAL RINGS, GATE BUSHINGS, OR THE FACING PLATE IN THE HEADCOVER, THE HEADCOVER, MUST BE DOWELED IN PLACE AND HELD WITH AT LEAST 50 PERCENT OF THE FLANGE BOLTS TORQUED IN PLACE.

9. WICKET GATE REPAIR

The following materials are recommended for rebuilding cast steel wicket gates:

a. **Journals** - On wicket gate bearing journals turning in greased bronze bushings rebuild with 309 stainless steel or Nitronic 60 stainless steel weld wire or rod.

b. **Sealing Surfaces, top and bottom** - On the top and bottom sealing surfaces of the gate, material selection will be partially determined by the facing plate material.

If the facing plate material is bronze or aluminum bronze use Nitronic 60 or similar gall resistant stainless steel to provide high wear resistance.

If the facing plate material is steel or stainless steel use either Nitronic 60 or Nickel Aluminum Bronze, UNS C95500.

c. **Sealing Surfaces, heel and toe -** Nitronic 60 or an equally gall resistant stainless steel is recommended for rebuilding leading and trailing edge gate seal surfaces.

As an alternative, leading edge surfaces may be austenitic stainless steel, UNS S30900, and trailing edge seal surfaces may be Nickel Aluminum Bronze, UNS C95500.

The following general procedures are recommended:

a. Machine surfaces to sound metal not less than 0.125 inch deeper than the finished dimension.

b. Rebuild surfaces using welding techniques for maximum bond strength.

c. Remachine the surfaces to the manufacturer's original contour and surface finish.

d. If wicket gate bushings are worn beyond manufacturer's tolerances they are generally replaced with bushings made from bearing bronze UNS C93200.

New wicket gate bushings must be line bored or the concentricity of the bushing fit holes established and close tolerance bushings procured. Unless otherwise specified by the manufacturer the bushings should be plumb and concentric within 0.00005 multiplied by the vertical distance between the top and bottom bushings.

Self lubricated bushings are now available that eliminate the need for periodic greasing. These bushings should be considered in locations where water quality standards prohibit contamination by even small quantities of grease. Reclamation has not had sufficient experience with this type of bushing to determine its long term performance.

10. PAINT

a. **Objectives** - As discussed in section 4, paint and other nonfused coatings such as epoxies and ceramic metals offer poor resistance to cavitation pitting and should not be applied simply as a cavitation barrier.

Paint and other thin coatings on the wicket gates and runner do not significantly impact efficiency or unit performance unless they are of sufficient thickness to alter the form or contour of the surface.

In most cases painting or coating of the wicket gates and runner is effective only in preventing corrosion and increasing visibility in the turbine.

b. **Stainless steel -** Stainless steel runners and wicket gates are generally left unpainted to take advantage of the corrosion resistance of the material. However, stainless steel is susceptible to rapid corrosion if it has been contaminated with carbon from grinding or weld spatter.

The corrosion resistance of the stainless steel can sometimes be restored by passivating the surfaces with a solution of I part (by volume) of 56 percent nitric acid mixed with 9 parts (by volume) of water. After passivating, the surfaces must be thoroughly rinsed with warm water and then swabbed with a 2 percent (by volume) ammonia solution followed by an additional water rinse to remove all traces of acid.

c. Carbon steel - Historically the most versatile and effective coating for carbon steel runners and wicket gates has been red lead priming paint, Federal Specification T-T-P-86 Types II and IV.

As an alternative coating to avoid lead contamination, vinyl resin, VR-3, is used as a runner and gate coating at many facilities. The vinyl resin can be supplied in white which greatly enhances visibility in the turbine. However when heated the vinyl resin can generate toxic fumes and must be thoroughly removed prior to weld repair.
Coal tar epoxy can be successful as a wicket gate coating but often loses adhesion and peels off under high velocity flow.

Epoxy Phenolic coatings may provide better bonding, corrosion and abrasion resistance for future runner and gate applications. At the present time Reclamation has had insufficient experience to verify the their performance.

In units which must pass large concentrations of sand and sediment, neoprene coatings are reported to significantly extend runner life on carbon steel and bronze runners.

11. GUIDE BEARING REBABBITTING

The majority of turbine guide bearings in Reclamation service are oil-lubricated, split shell, babbitted journal bearings.

Minor scratches on the babbitt can often been be adequately restored by scraping. However, periodically due to lubrication failure or normal wear the bearing must be rebabbitted to restore design clearances and surface finish.

The following are guidelines to be used for preparation of rebabbitting specifications:

a. **Babbitt material** - Unless otherwise specified by the manufacturer, we require Type ASTM B-23, grade 2, or grade 3 tin based babbitt.

b. **Casting** - The babbitt is applied using centrifugal casting methods.

c. **Tinning** - After thorough removal of the old babbitt, the entire bonding surface for the babbitt must be retinned. If the bearing shell is cast iron, it must be tinned with nickel.

d. **Inspection** - After machining to final dimensions ultrasonic inspection is required to insure proper bonding and absence of porosity.

The ultrasonic inspection techniques must meet the requirements of DOD 2183, and the inspector must be certified as SNT-TC-1A, Level II (Society for Non-Destructive Testing).

Generally the total area of unbonded babbitt is not permitted to exceed 10 percent of the total babbitted surface, and no single unbonded area is permitted to exceed a dimension of 1 inch.

No porosity is permitted.

REFERENCES

(1) Copyright 1986 Electric Power Research Institute, EPRI-4719, "Cavitation Pitting Mitigation in Hydraulic Turbines, Volume 1: Guidelines and Recommendations." Reprinted with permission. Pages 3-11 to 3-13.

(2) Electric Power Research Institute, Pages 4-1 to 4-59.

Table 4-1

CAVITATION PITTING LOCATION PROPELLER AND KAPLAN TURBINES

Location of Pitting	Possible Cause of Pitting	Possible Remedial Measures (1)
RUNNER		
A. Suction side of blade from centerline to trailing edge	- overall pressure too low (setting too high)	- reduce maximum output
	- improper blade contour or profile	- correct contour or profile
B. Leading edge of blade on suction side	- operation at heads much higher than design	- modify leading edge profile if head range is normal (2) (3)
	- improper leading edge profile	- modify leading edge profile
C. Leading edge of blade on pressure side	- operation at heads much lower than optimum	- modify leading edge profile if head range is normal (2) (3)
	- improper leading edge profile	- modify leading edge profile
D. Trailing edge of blade on pressure side	- too abrupt a profile change at trailing edge	- make a more gradual taper to the trailing edge of the blade
E. Blade periphery on the suction side of the peripheral edge of blade	- leakage cavitation	- add anti-cavitation fins
F. Near blade periphery on suction side of blade (vertical Kaplan turbines)	- discontinuity between runner periphery and discharge ring when blades are at steep angle	
G. Hub	- operation for extended periods at low load	- reduce low load operation
	- discontinuity between blade and hub (Kaplan turbines)	

Table 4-1

CAVITATION PITTING LOCATION
PROPELLER AND KAPLAN TURBINES (Cont'd)

Location of Pitting	Possible Cause of Pitting	Possible Remedial Measures (1)
DISCHARGE RING		
H. Discharge ring	- leakage cavitation	- add anti-cavitation fins
	- cavitation vortices or wakes shed from lower trailing edge of wicket gates	- modify wicket gate lower trailing edge
DRAFT TUBE LINER	- leakage cavitation	- ad anti-cavitation fins
I. Draft tube liner	- cavitation vortices shed from trailing edge of runner blades	- modify runner blade trailing edge
	- too abrupt a contour change between the discharge ring and draft tube liner	

NOTES:

1. A remedial measure common to all types of damage is to make repairs using a material of greater cavitation resistance than original material.
2. Normal head range for propeller turbines is form 10 percent below to 10 percent above the design head.
3. Normal head range for Kaplan turbine is from 35 percent below to 25 percent above the design head.

Table 4-2

CAVITATION PITTING LOCATION
FRANCIS TURBINES

Location of Pitting	Possible Cause of Pitting	Possible Remedial Measures (1)
RUNNER		
A. Suction side of blade near band and trailing edge	- overall pressure too low	- reduce output
B. Leading edge of blade near band on suction side	- improper blade profile or contour	- correct contour or profile
	- operation at heads much higher than design	- modify leading edge profile if head range is normal (2)
	- improper leading edge profile	- modify leading edge profile
C. Leading edge of blade near band on pressure side	- operation at heads much lower than design	- modify leading edge profile if head range is normal (2)
	- improper leading edge profile	- modify leading edge profile
D. Trailing edge of blade on	- improper trailing edge contour	- adjust contour
E. Crown or leading edge of	- operation for extended periods at	- reduce low load operation
F. At air vents in crown	- discontinuity at crown	
DISCHARGE RING		
G. On discharge ring opposite runner band	- seal leakage cavitation	

Table 4-2

CAVITATION PITTING LOCATION
FRANCIS TURBINES (Cont'd)

Location of Pitting	Possible Cause of Pitting	Possible Remedial Measures (1)
DRAFT TUBE LINER		
H. Under bottom of band	- seal leakage cavitation	
I. Below band	- seal leakage cavitation	
	- cavitation vortices shed from trailing edge of blade	- reduce maximum load
	- vortex originating at leading edge of blade during low load operation	- reduce low load operation
WICKET GATES		
J. Pitting on side of wicket gates	- improper contour	- modify contour
	- leakage cavitation	- see Note 3
	- galvanic corrosion between stainless steel sealing insert (overlay) and carbon steel	

NOTES:

1. Remedial measure common to all types of damage is to make repairs using a material of greater cavitation resistance than the original material.
2. Normal head range for a Francis turbine is from 25 percent below to 10 percent above the rated head.
3. On high head installations, avoid extended operation with wicket gates in closed position. Use turbine inlet valve in automatic start-stop sequence.

Table 4-3

CAVITATION PITTING LOCATION
PUMP TURBINES (FRANCIS)

Location of Pitting	Possible Cause of Pitting	Possible Remedial Measures (1)
RUNNER		
A. Suction side of blade near band and pump leading edge	- overall pressure too low	
	- improper blade profile or contour	- correct profile or contour
B. Suction side of blade at pump leading edge	- operation at heads higher than design (or discharges lower than design)	- modify leading edge profile if head range is not excessive (2)
	- improper leading edge profile	- modify leading edge profile
	- improper tailing edge profile for	- modify trailing edge profile
C. Pressure side of blade at pump leading edge	- operation at heads lower than design (or discharges higher than design)	- modify leading edge profile if head range is not excessive (2)
	- improper leading edge profile	- modify leading edge profile
D. Suction side of blade near band at turbine leading edge	- operation in turbine direction at head much higher than design	- modify leading edge profile if head range is not excessive (3) (4)
	- improper leading edge profile	- modify leading edge profile
E. Pressure side of blade near band at turbine leading edge	- operation in turbine direction at heads much lower than design	- modify leading edge profile if head range is not excessive (3) (4)
	- improper leading edge profile	- modify leading edge profile
F. Crown or turbine leading edge of blade near crown	- operation for extended periods in turbine direction at low loads	- reduce low load operation

Table 4-3

CAVITATION PITTING LOCATION
PUMP-TURBINES (FRANCIS) (Cont'd)

Location of Pitting	Possible Cause of Pitting	Possible Remedial Measures (1)
DISCHARGE RING		
G. On discharge ring opposite	- seal leakage cavitation	
DRAFT TUBE LINER		
H. Under bottom of band	- seal leakage cavitation	
I. Below band	- seal leakage cavitation	
	- cavitation vortices shed from trailing edge of bucket (turbine direction)	- reduce load in turbine direction
	- vortex originating at leading edge of blade during low load operation	- reduce low load operation
WICKET GATES		
J. Pitting on side of wicket gates	- improper contour	- modify contour
	- wicket gate leakage	- see Note 5
	- galvanic corrosion between stainless steel sealing insert (or overlay) and carbon steel	

Table 4-3

CAVITATION PITTING LOCATION
PUMP-TURBINES (FRANCIS) (Cont'd)

NOTES:

1. A remedial measure common to all types of damage is to make repairs using a material of greater cavitation resistance than original material.

2. Normal head range for a pump-turbine in the pump mode is:

N_Q (ft, gpm units)	Head Range
< 1500	5 percent below to 7 percent above design head
1500 - 3500	5 percent below to 10 percent above design head
< 3500	5 percent below to 20 percent above design head

3. Normal head range for a pump-turbine in the turbine mode is typically from 15 percent below to 20 percent above the design head; however, it is also dependent on the pump selection.

4. Turbine leading edge modifications will change pump mode characteristics and, therefore, should be discussed with the manufacturers.

5. On high head installations, avoid extended operation with wicket gates in closed position. Use inlet valve in automatic start-stop sequence.

Table 4-4

METHODS OF CAVITATION PITTING REPAIR

	Weld Repairs	Non-Fused Material	Weld Plates Over Damaged Area	Remove Damaged Area and Weld Plate Insert
Propeller and Kaplan Turbines				
- Runner blades	X	X		X
- Hub	X	X	X	
- Wicket gates	X	X		
- Discharge ring	X	X		X
- Draft tube liner	X	X		X
Pump-Turbines and Francis Turbines				
- Runner blades	X			X
- Crown	X	X	X	
- Band	X			
- Wicket gates	X	X		
- Discharge ring	X	X		X
- Draft tube liner	X	X		X

Table 4-6

RECOMMENDED MINIMUM PREHEAT TEMPERATURE

Base Material Thickness (in.)	Carbon Equivalent 0.35	0.40	0.45	0.50	0.55
0.5	60	60	60	125	200
0.75	60	60	125	250	300
1.0	60	60	200	300	350
1.5	60	150	250	350	400
$\geq$ 2	60	200	300	400	400

Notes:

1. Minimum preheat temperatures are in degrees Farenheit.

2. Recommended temperatures are based on:
   - Use of low hydrogen electrodes; and
   - Minimum arc energy of .30 kj/in.

Table 4-7

PREHEAT FOR TYPICAL CARBON STEEL TURBINE MATERIALS

Material	Thickness (inch)	Carbon Equivalent (percent)	Minimum Preheat (°F)
ASTM A27 Gr 60-30	1	0.40	60
	1-1/2	0.40	150
	>2	0.40	200
ASTM A27 Gr 65-35	1	0.42	120
	1-1/2	0.42	190
	>2	0.42	240
ASTM A27 Gr 70-40	1	0.45	200
	1-1/2	0.45	250
	>2	0.45	300
ASTM A516 Gr 55	1	0.41	120
	1-1/2	0.41	190
	>2	0.43	260
ASTM A516 Gr 60	1	0.44	180
	1-1/2	0.44	230
	≥2	0.46	320
ASTM A516 Gr 70	1	0.49	280
	1-1/2	0.49	330
	>2	0.51	400
ASTM A285 Gr B	1	0.37	60
	1-1/2	0.37	60
	2	0.37	120

Note: The above values for carbon equivalent are based on the maximum allowable carbon and maganese content allowed by the respective ASTM standard. The actual carbon equivalent may be less, allowing lower preheat.

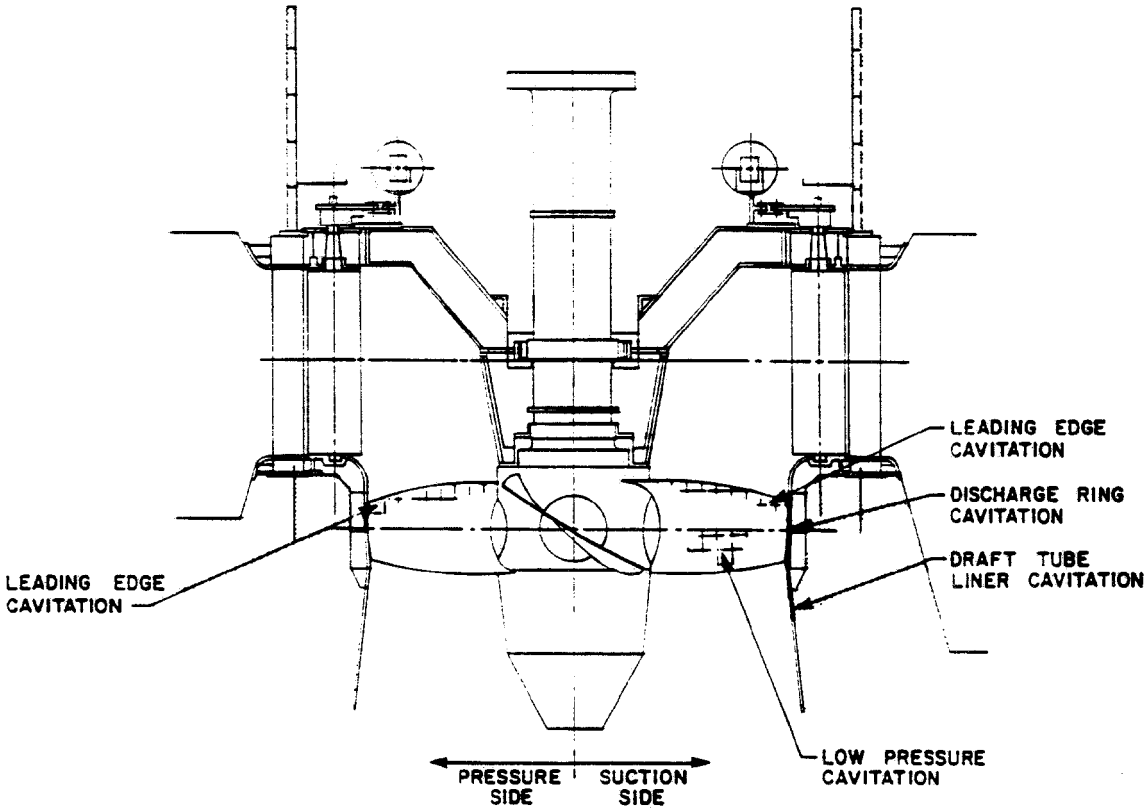

Figure 4-1. Kaplan Turbine
Typical Areas of Cavitation Pitting

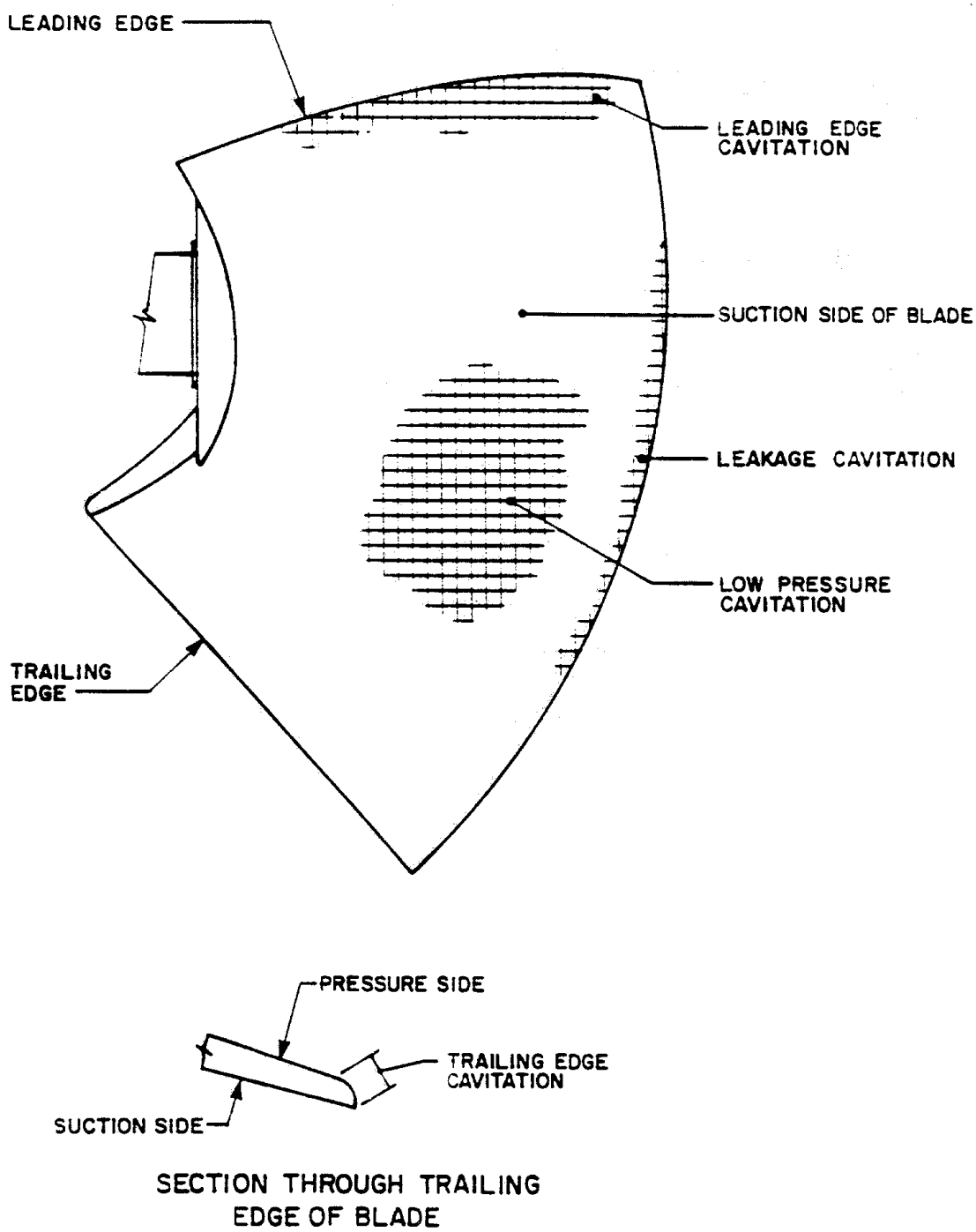

Figure 4-2. Areas of Runner Cavitation Pitting
Propeller and Kaplan Turbines

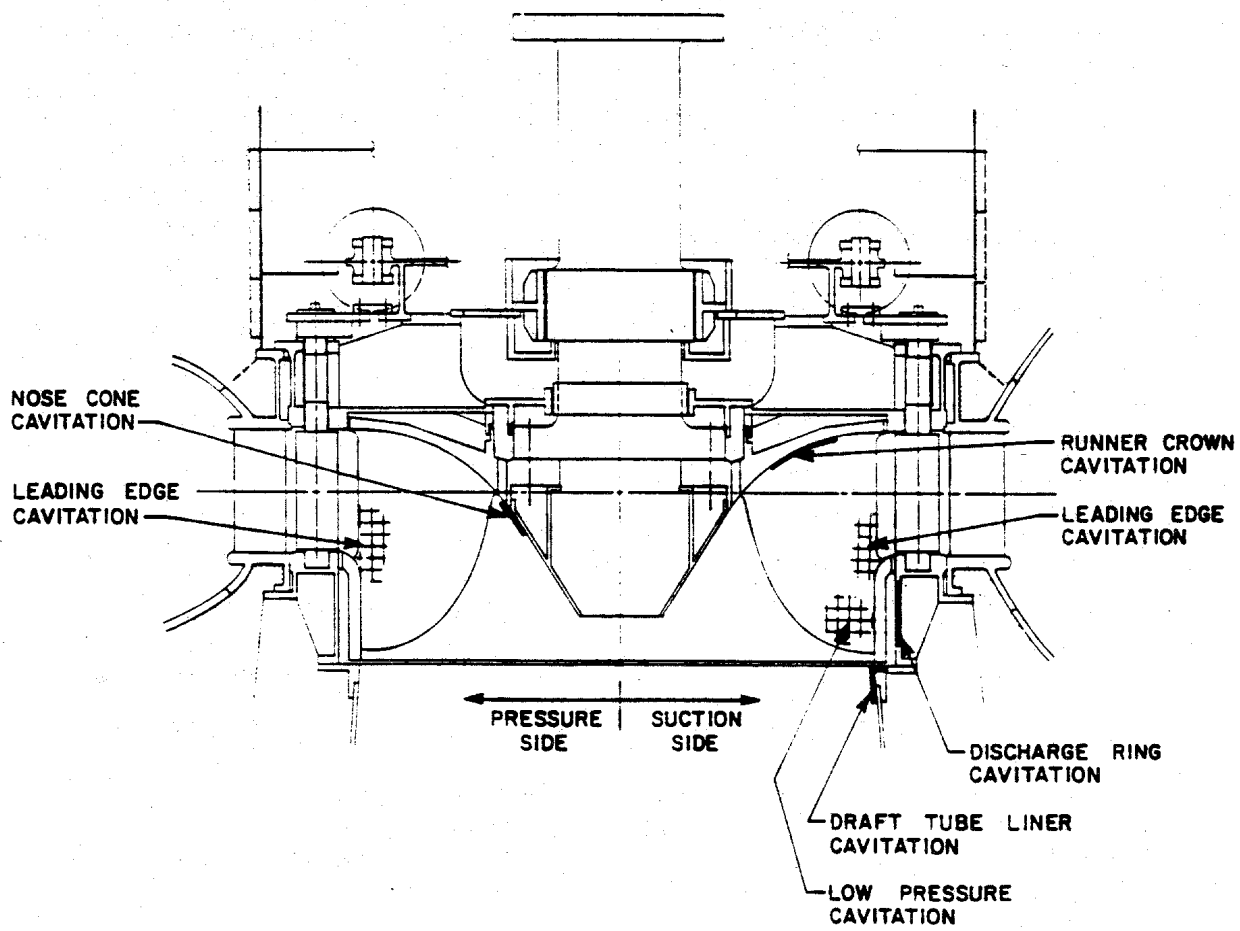

Figure 4-3. Francis Turbine - Typical Areas of Cavitation Pitting

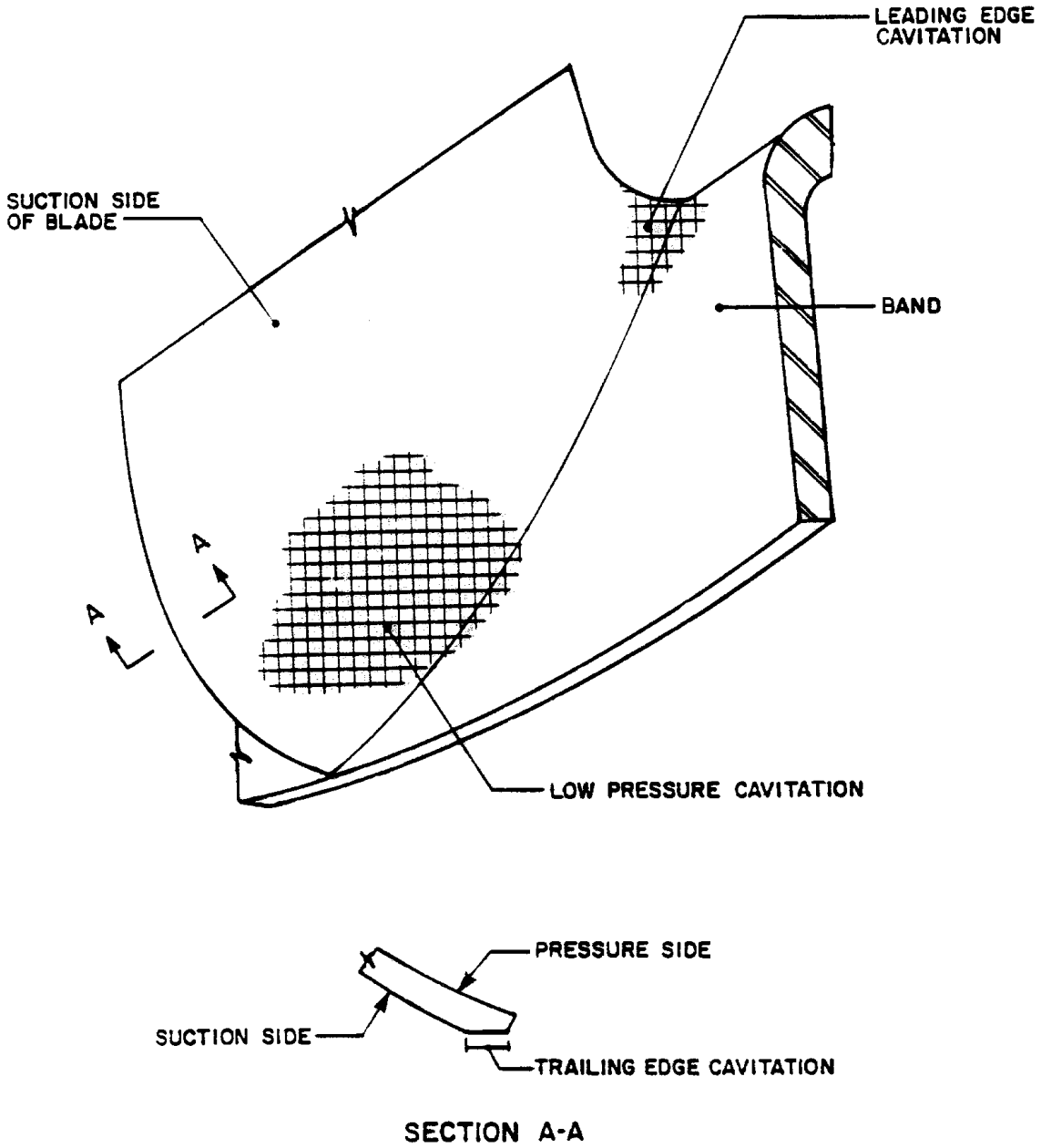

Figure 4-4. Areas of Runner Cavitation Pitting - Francis Turbine

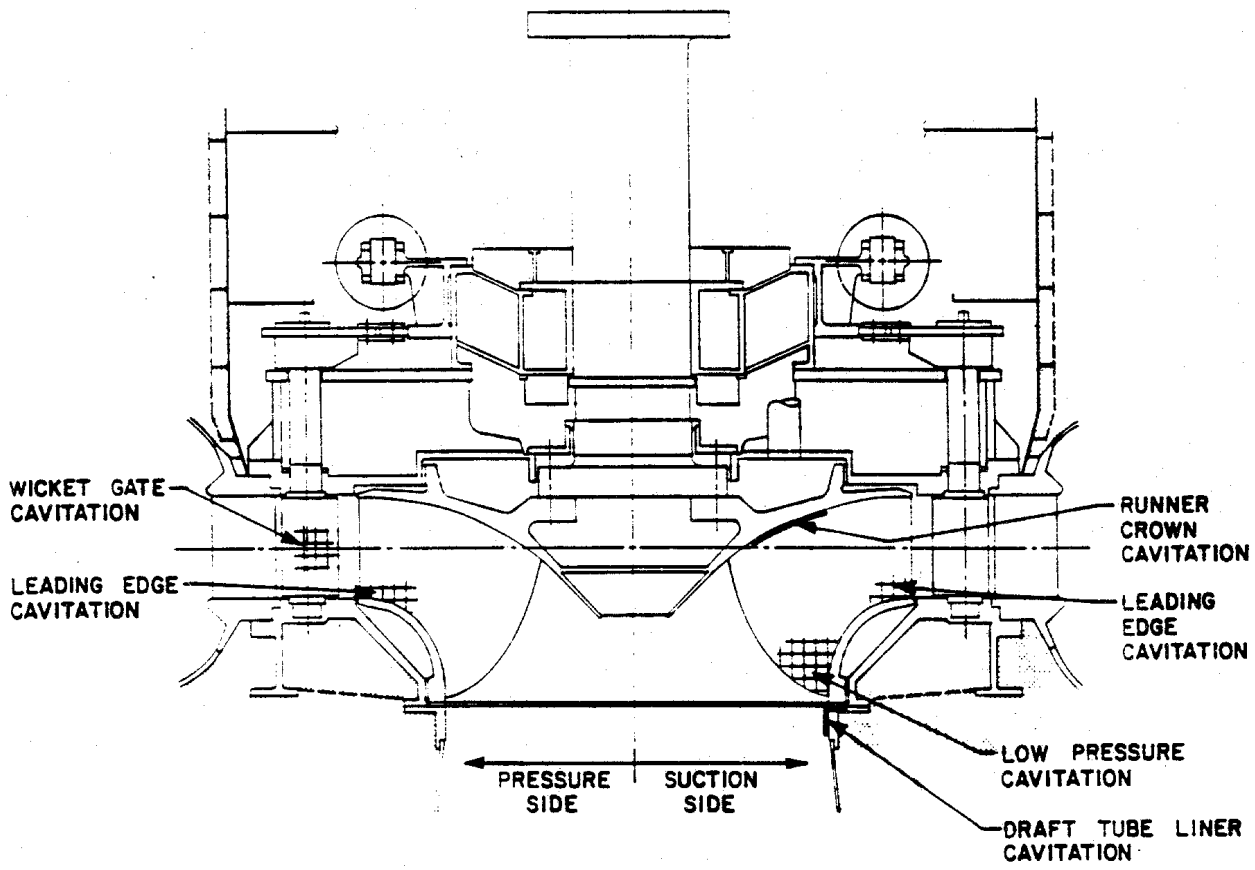

Figure 4-5. Pump-Turbine - Typical Areas of Cavitation Pitting

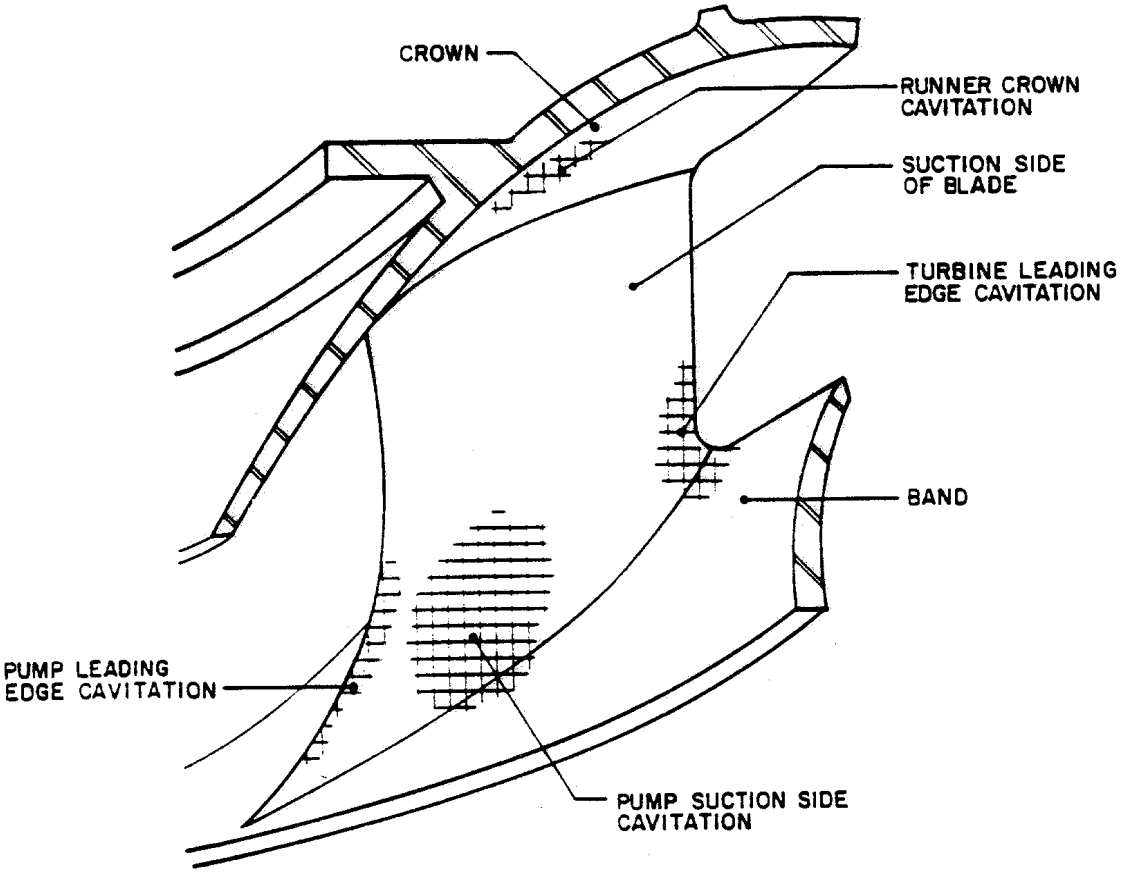

Figure 4-6. Areas of Runner Cavitation Pitting
Pump-Turbine

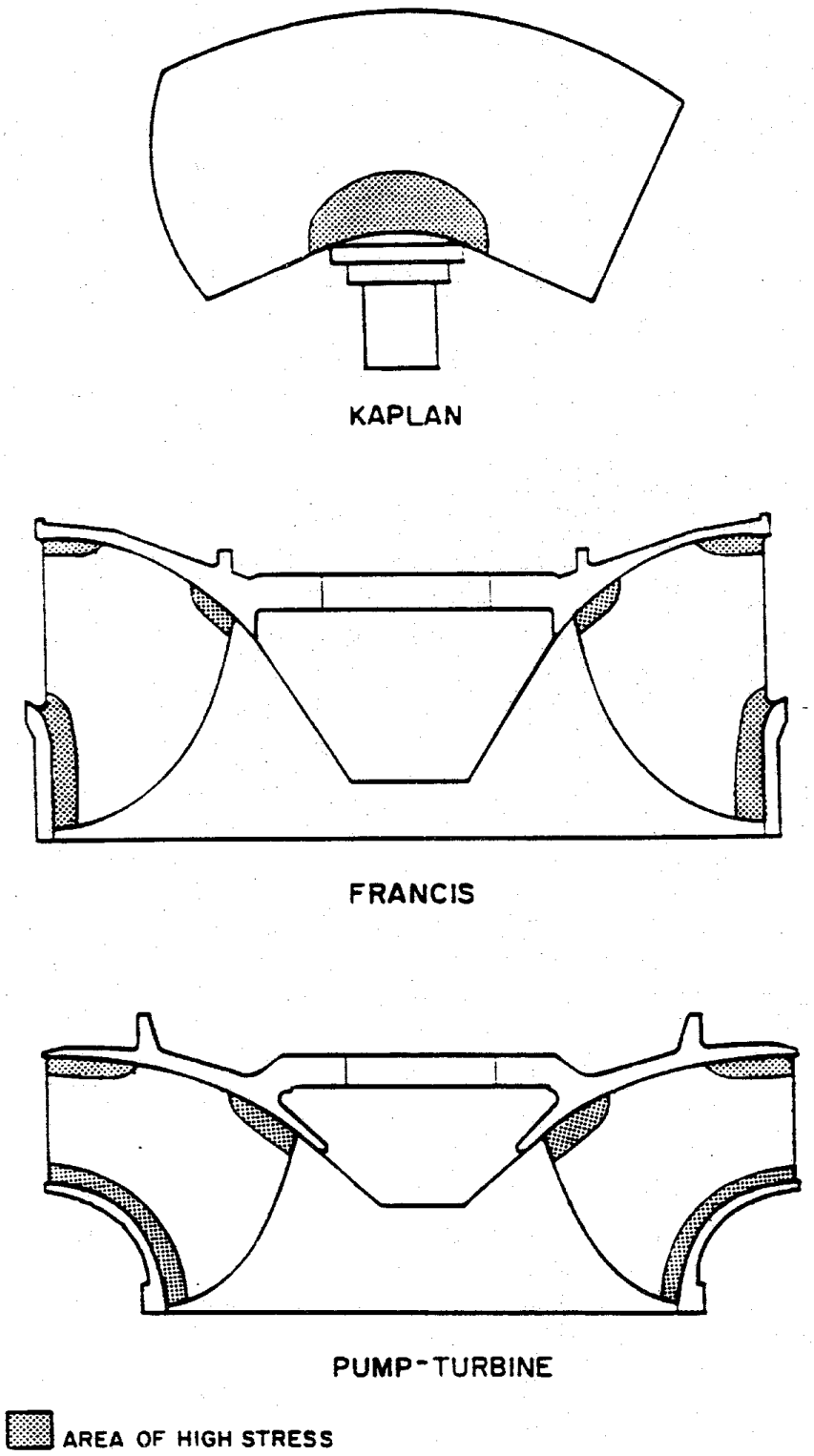

Figure 4-7. Areas of High Stress on Runners

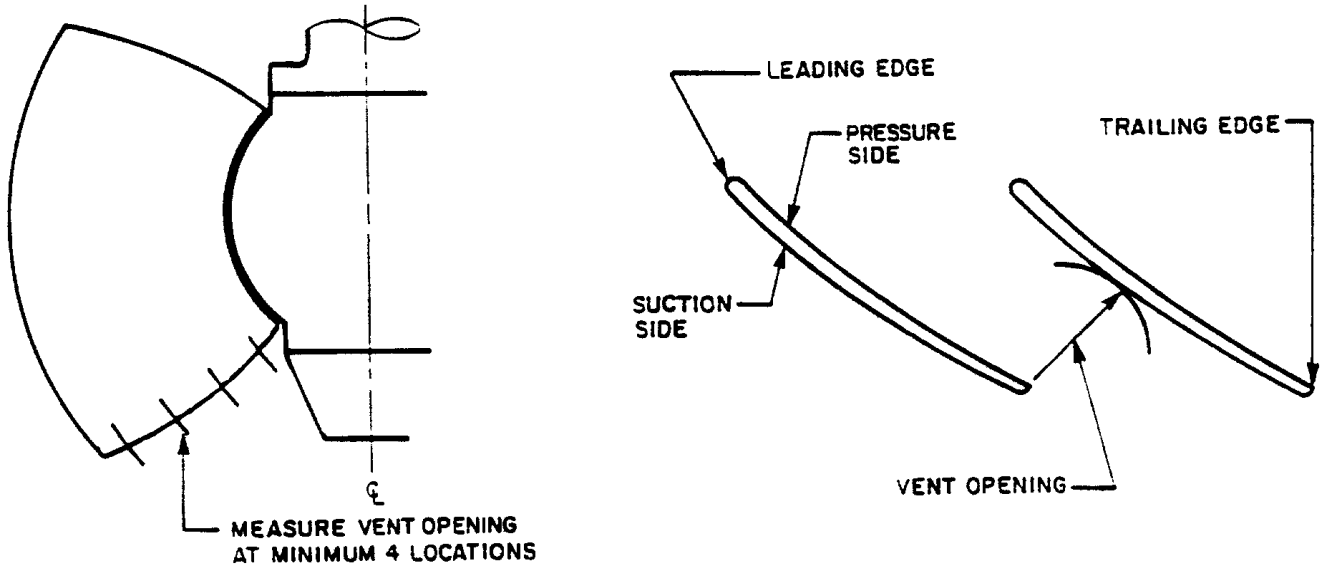

VENT OPENING

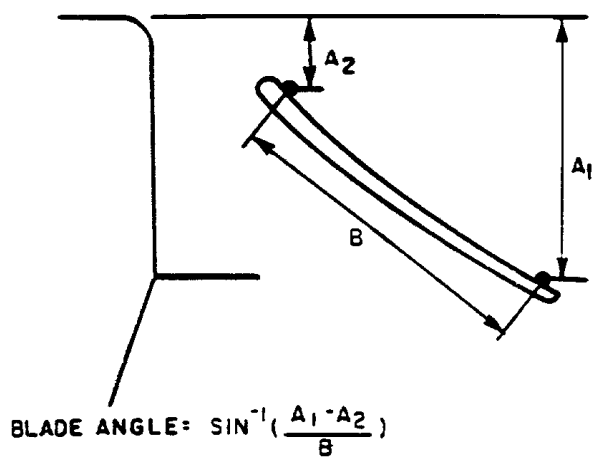

BLADE ANGLE

NOTES:

1. AVERAGE VENT OPENINGS BETWEEN EACH PAIR OF BLADES SHOULD BE WITHIN 2% OF OVERALL AVERAGE VENT OPENING FOR ALL BLADES.
2. INDIVIDUAL BLADE ANGLE SHOULD BE WITHIN 0.25 DEGREES OF AVERAGE OF ALL BLADES.

Figure 4-8. Propeller and Kaplan Turbine Vent Opening and Blade Angle Check

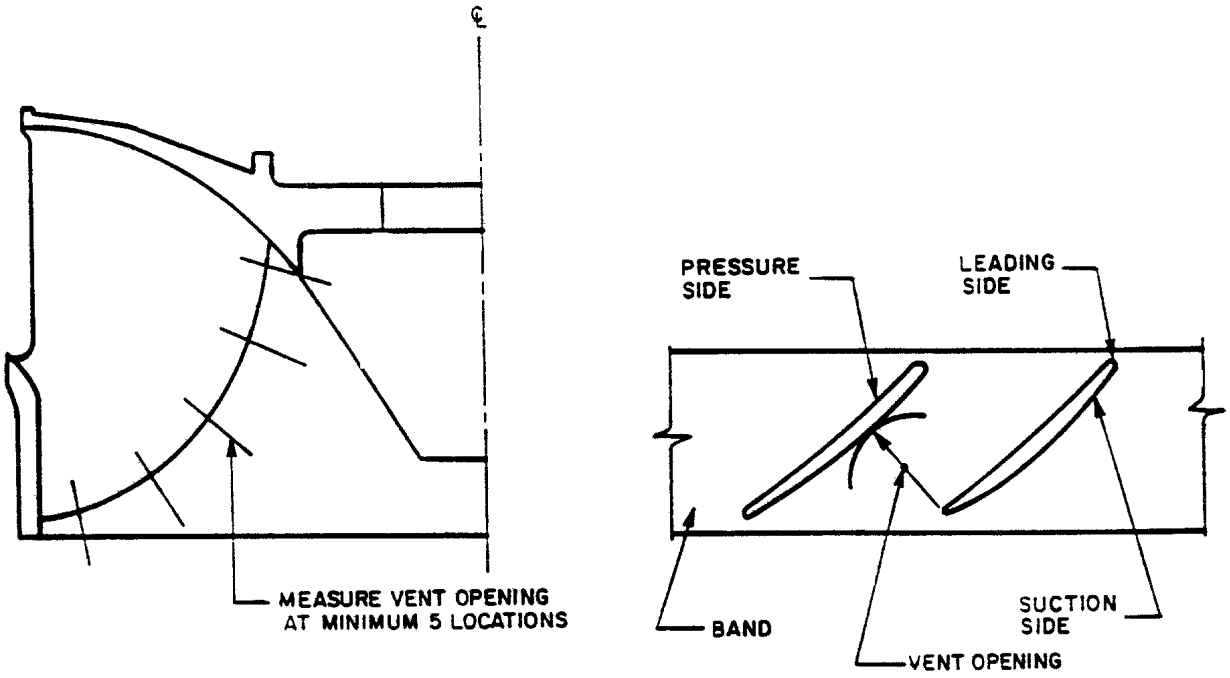

Figure 4-9. Francis Turbine - Vent Opening Check

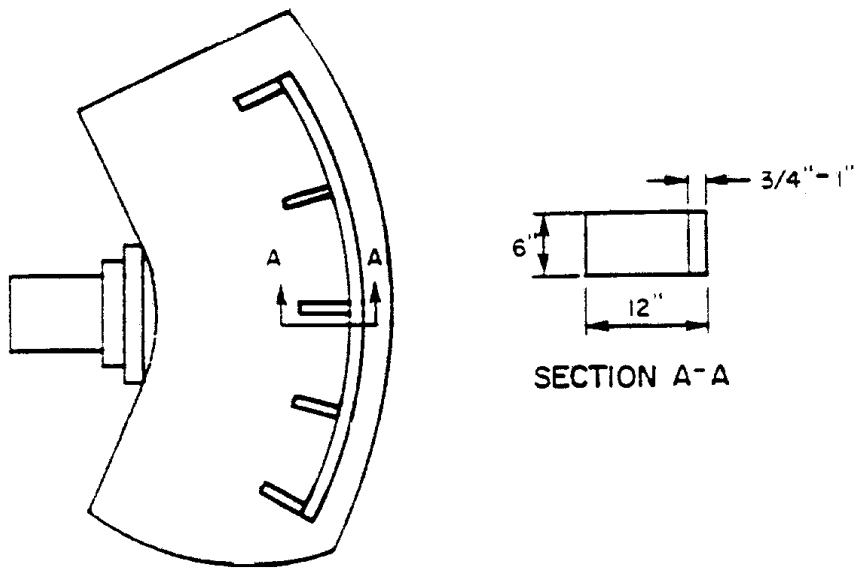

ALTERNATIVE A

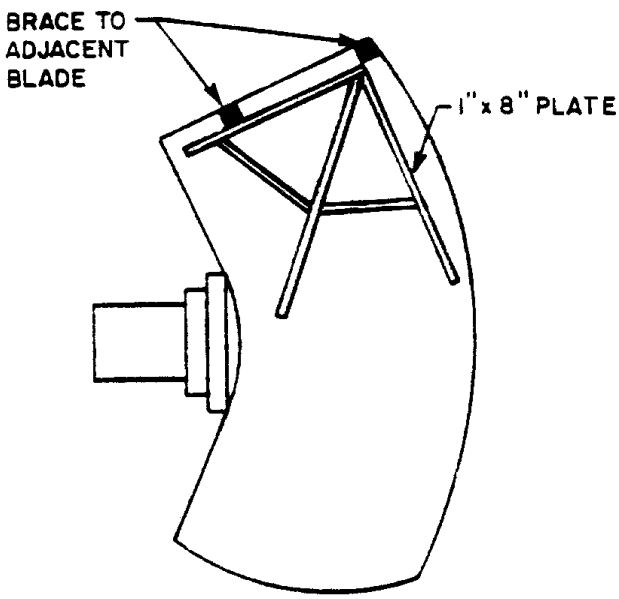

ALTERNATIVE B

Figure 4-10. Strongbacks for Propeller and Kaplan Turbines

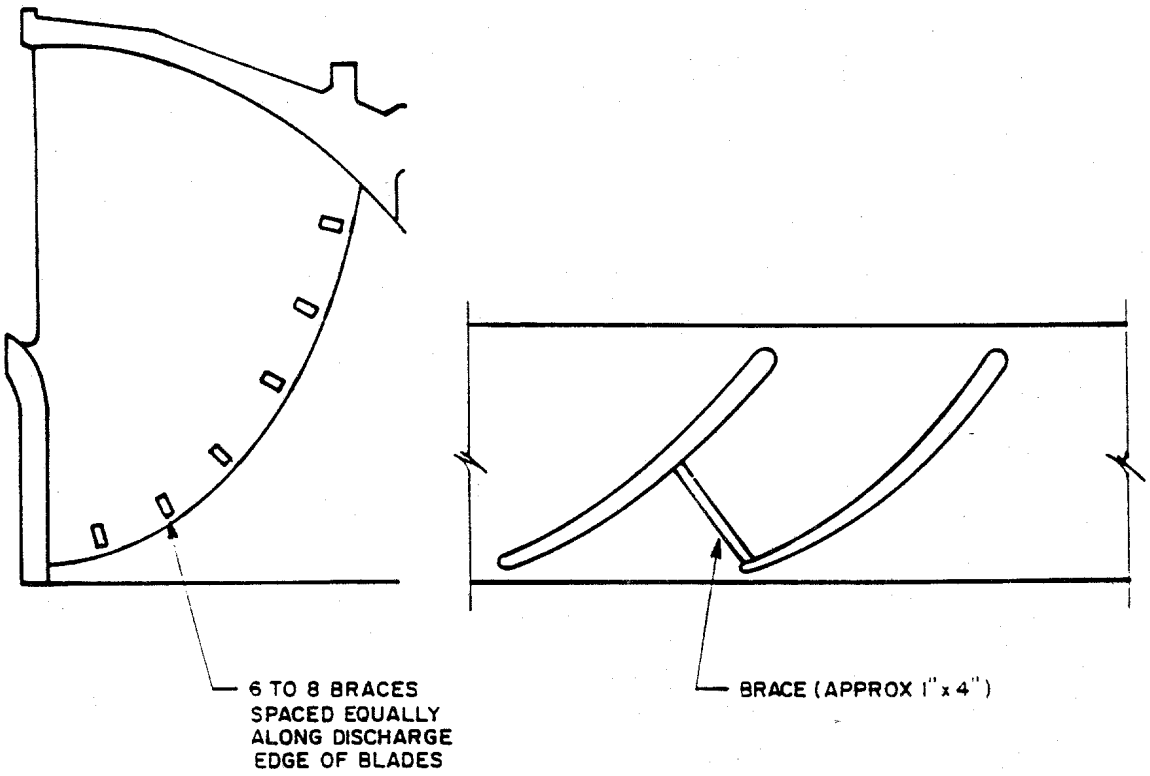

Figure 4-11. Bracing for Francis Turbine Blades

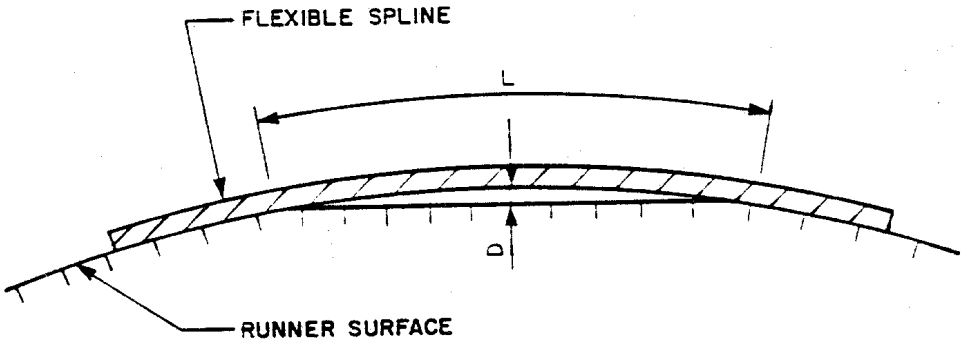

HEAD (FT.)	RUNNER DISCHARGE DIAMETER (IN.)	MAXIMUM D/L IN DIRECTION OF FLOW	MAXIMUM D/L PERPENDICULAR TO FLOW
≤1000	≤ 100	0.005	0.01
≤1000	≤ 200	0.01	0.015
≤1000	> 200	0.01	0.02
> 1000	ALL SIZES	0.005	0.01

Figure 4-12. Recommended Tolerances - Runner Cavitation Pitting Repairs

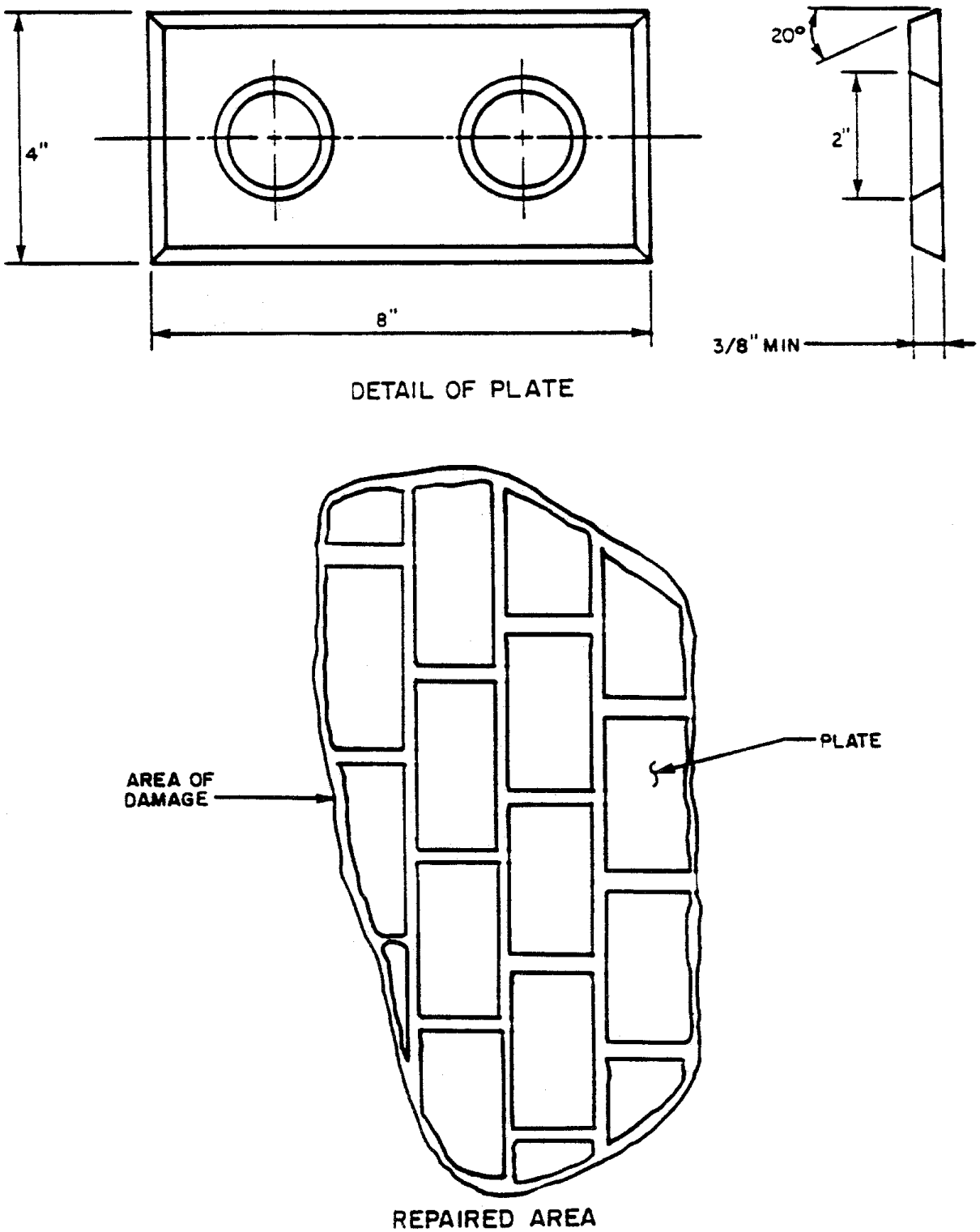

Figure 4-13. Cavitation Damage Repair with Solid Plate

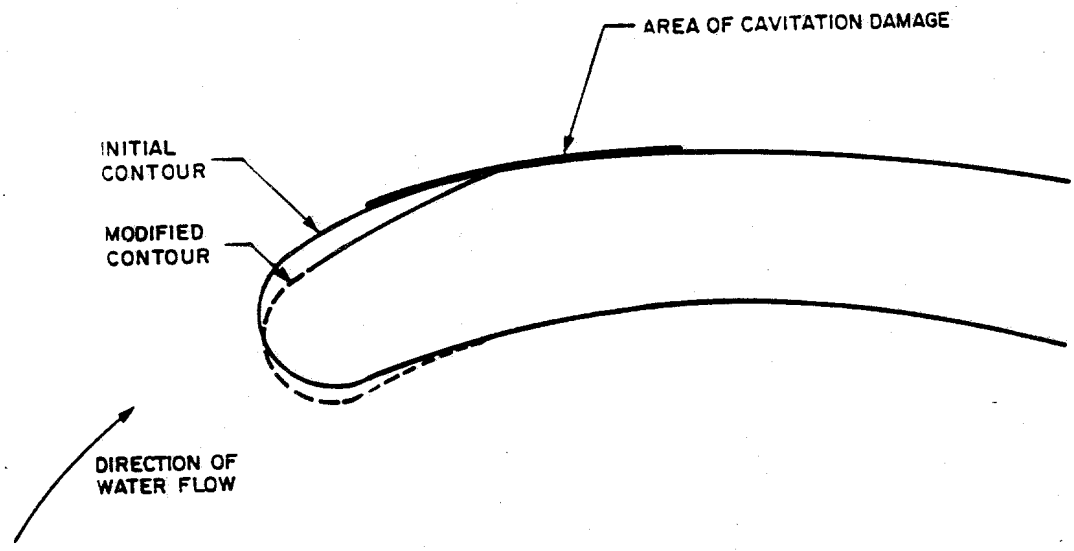

Figure 4-14. Francis Turbine - Runner Blade Leading Edge Modifications

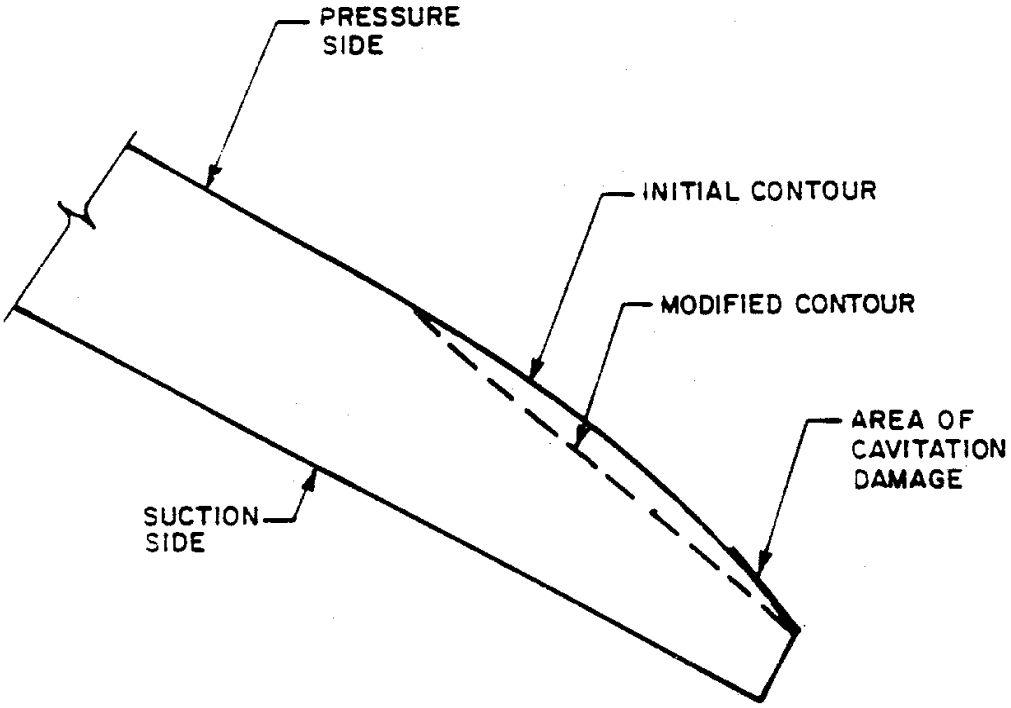

PROPELLER AND KAPLAN TURBINE

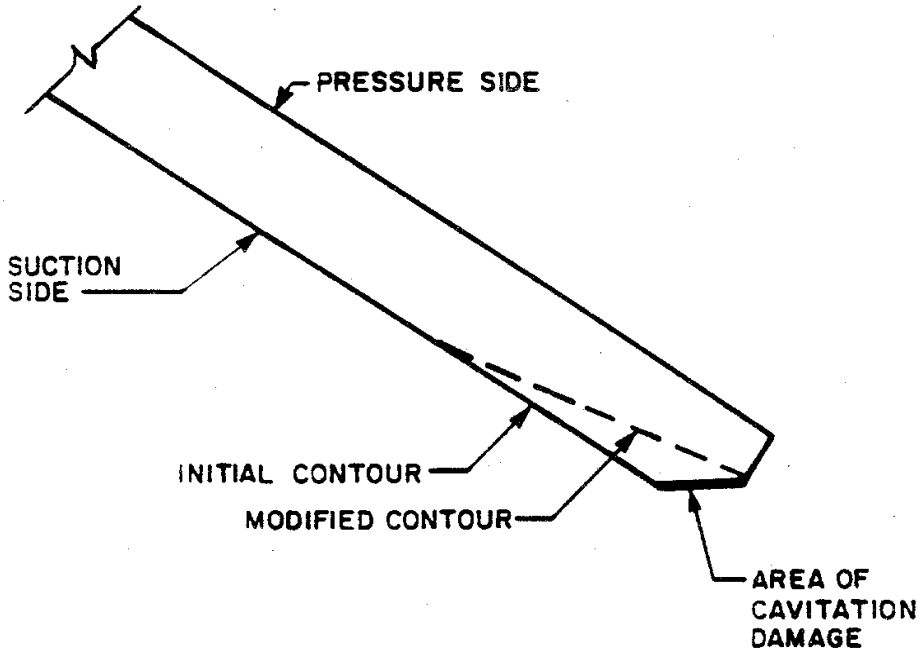

FRANCIS TURBINE

Figure 4-15. Runner Blade Trailing Edge Modifications

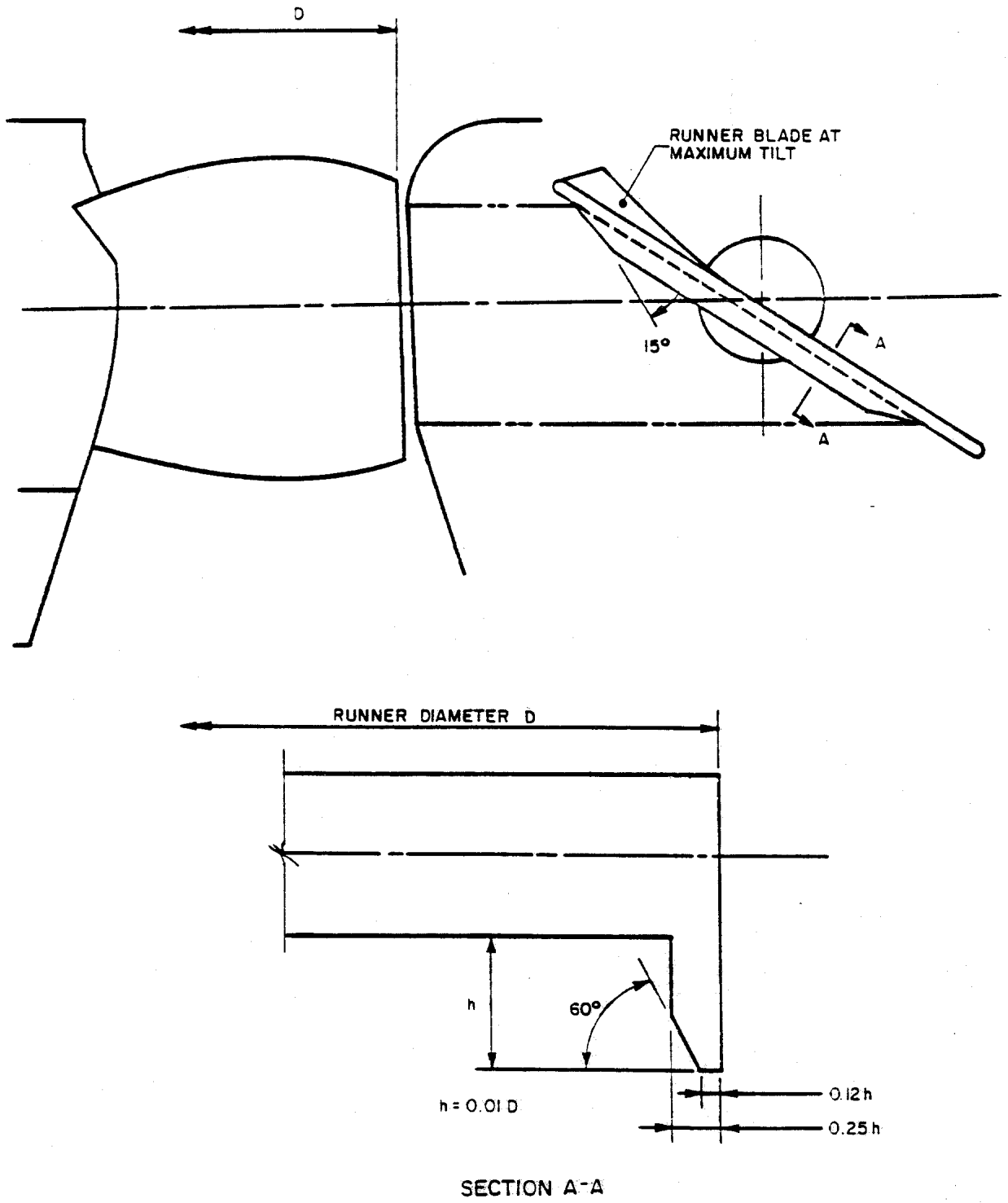

Figure 4-16. Anti-Cavitation Fin

Remarks:

Maximum depth of pitting - inches

Bucket _____

Band _____

Crown _____

Cone or vent _____

Unit No._____ Bucket No._____

Area repaired (this sheet) - sq. in. ____ Date _____

Bucket _____ _____ _____

Band _____ _____ _____

Crown _____ _____ _____

Cone or vent _____ _____ _____

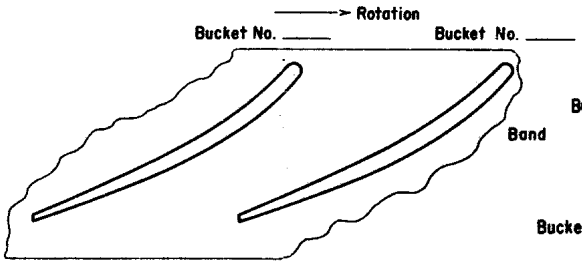

SECTION B-B

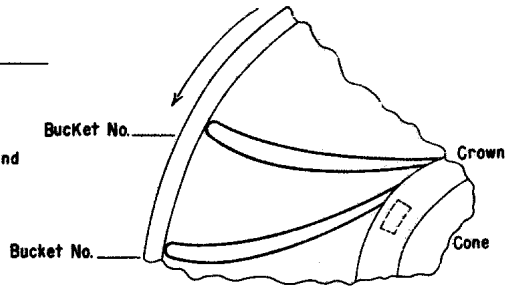

SECTION A-A
Looking upward

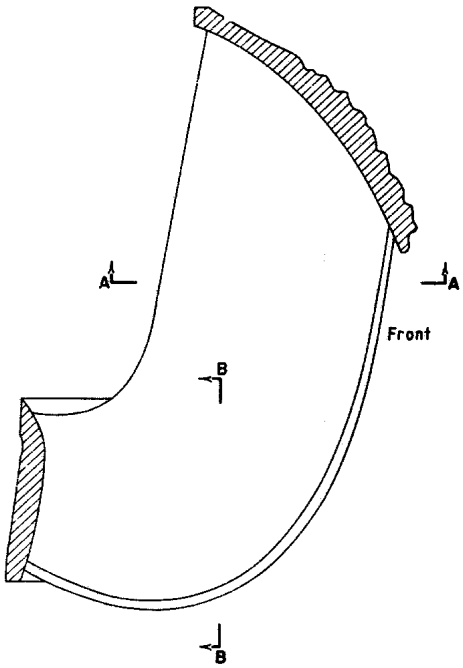

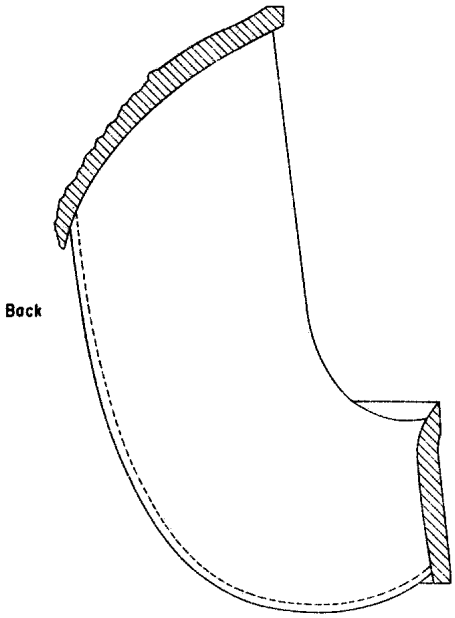

Method of repair and material used _____

_____

_____

_____

Presently pitted

Presently patched

UNITED STATES
DEPARTMENT OF THE INTERIOR
BUREAU OF RECLAMATION

_____ PLANT

RUNNER INSPECTION REPORT
LONG BUCKET — CLOCKWISE ROTATION

UNIT No._____ BUCKET No._____

INSPECTOR_____ SHEET____OF____SHEETS

APPROVED_____ DATE_____

GFO 846-777

Remarks:
Maximum depth of pitting - inches

Bucket _____

Band _____

Crown _____

Cone or vent _____

Unit No. _____ Bucket No. _____

Area repaired (this sheet) - sq. in. _____ Date _____

Bucket _____ _____ _____

Band _____ _____ _____

Crown _____ _____ _____

Cone or vent _____ _____ _____

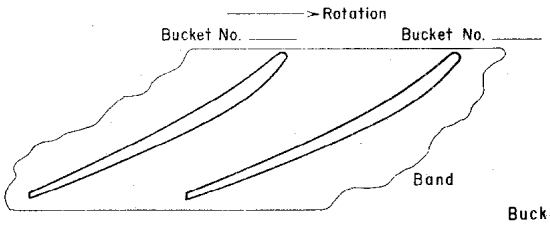

SECTION B-B

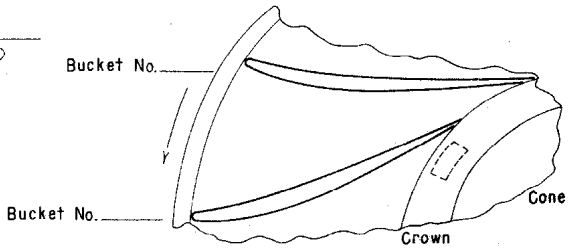

SECTION A-A
Looking upward

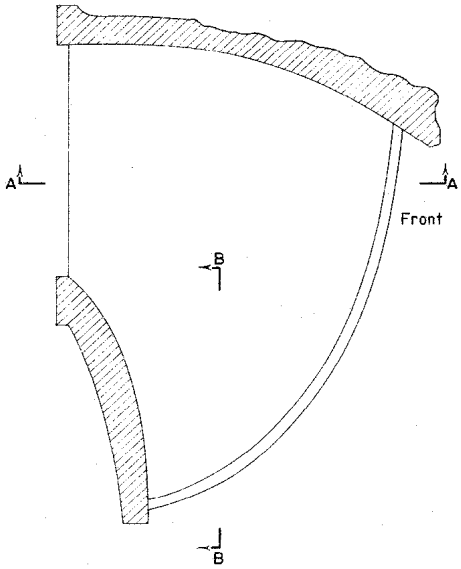

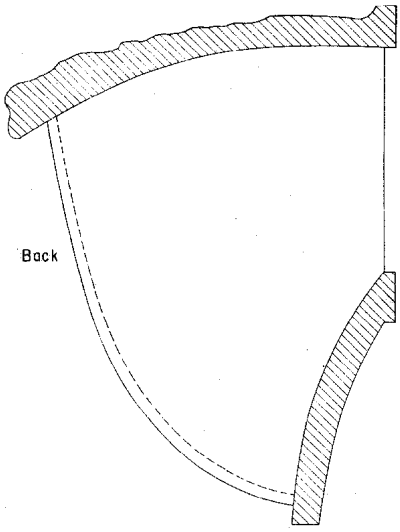

Method of repair and material used _____

_____

_____

_____

Presently pitted

Presently patched

UNITED STATES
DEPARTMENT OF THE INTERIOR
BUREAU OF RECLAMATION

_____ PLANT
RUNNER INSPECTION REPORT
SHORT BUCKET - CLOCKWISE ROTATION

UNIT No. _____ BUCKET No. _____

INSPECTOR _____ SHEET ____ OF ____ SHEETS

APPROVED _____ DATE _____

GPO 846-778

Remarks:

Maximum depth of pitting - inches

Bucket _____

Band _____

Crown _____

Cone or vent _____

Unit No. _____ Bucket No. _____

Area repaired (this sheet) - sq. in. _____ Date _____

Bucket _____ _____ _____

Band _____ _____ _____

Crown _____ _____ _____

Cone or vent _____ _____ _____

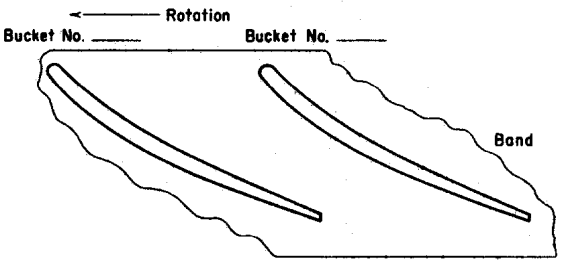

SECTION B-B

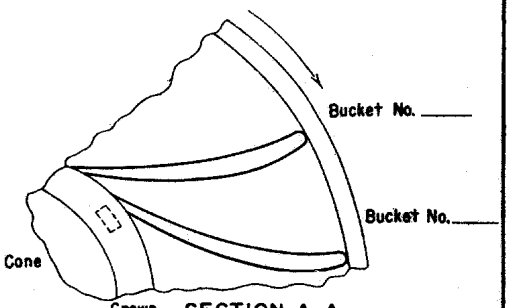

SECTION A-A
Looking upward

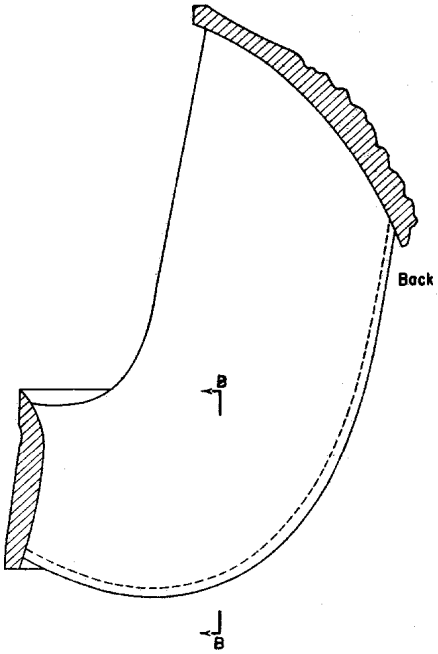

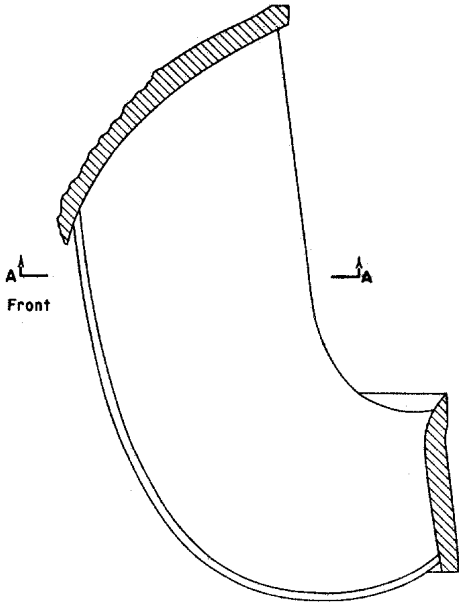

Method of repair and material used _____

_____

_____

_____

Presently pitted

Presently patched

UNITED STATES
DEPARTMENT OF THE INTERIOR
BUREAU OF RECLAMATION

_____ PLANT

RUNNER INSPECTION REPORT
LONG BUCKET — COUNTERCLOCKWISE ROTATION

UNIT No. _____ BUCKET No. _____

INSPECTOR _____ SHEET ____ OF ____ SHEETS

APPROVED _____ DATE _____

GPO 846-780