FACILITIES INSTRUCTIONS, STANDARDS, AND TECHNIQUES

FIST VOLUME 5 - 1

PERSONAL PROTECTIVE GROUNDING

Internet Version of This Manual Created
August 2000

JANUARY 1993

The Appearance of the Internet Version of This Manual
May Differ From the Original, but the Contents Do Not

BUREAU OF RECLAMATION
DENVER OFFICE

Prepared by
Howard E. Watson

Back to Main Index

PURPOSE AND SCOPE

This volume, when used in conjunction with other applicable standards and codes, is intended to provide information on grounding equipment and application procedures to enable workers to perform their duties with maximum confidence and safety.

The primary purpose of personal protective grounds is to provide maximum safety for personnel while they are working on deenergized lines or equipment by limiting voltage rise to a safe value in case the lines or equipment are accidentally energized from any source by shunting the fault current until circuit breakers, and/or fuses disconnect the equipment being worked on within a given time/current relationship. Secondary functions of personal grounds are to protect against induced voltages from adjacent parallel energized circuits and to protect against static voltages.

Most of the available literature on the subject of temporary grounds has been published as bits and pieces in manufacturers' data and brochures, AIEE (American Institute of Electrical Engineers) and IEEE (Institute of Electrical and Electronic Engineers) conference papers, handbooks, textbooks, and many other sources. No attempt is made in this volume to identify the source of each bit of information. Much of this information has been condensed into general rules and instructions found in Reclamation's "Reclamation Operation and Maintenance Safety Standards" and "Construction Safety Standards." This volume will serve to consolidate additional and related information on the subject into one source, except no attempt is made to duplicate or supercede information in the above-listed standards.

This volume has been revised to take into account effects of induced voltage, information gained from staged-fault testing, in-service evaluation of grounds, and exclusive use of threaded-stud compression ferrules.

Although this volume is written for use by crafts personnel, some of the material contained is presented to electrical engineering students at the senior and graduate level. To apply, it will require a person capable of performing calculations involving complex algebra, logarithms, per-unit notation, and impedance.

CONTENTS

Section Page

1. Definitions and interpretations 1
2. Current-shock hazard 2
3. Grounding/jumpering 4
4. Basic criteria for safe grounding practices 5
5. Parallel grounds 10
6. Grounding Equipment 11
   6.1 Grounding cables 11
   6.2 Jackets 11
   6.3 Copper and aluminum conductor 11
   6.4 Size of grounding cable 12
   6.5 Grounding clamps 12
   6.6 Grounding ferrules 14
   6.7 Assemblies 15
   6.8 Hot sticks 15
   6.9 Grounding clusters/supports 15
7. Calculating ground sizes and determination of maximum ampacity 17
   7.1 Determine maximum current 17
   7.2 Size of cables 18
   7.3 Determine voltages 18
8. Application of protective grounds 22
   8.1 Obtain a clearance. 22
   8.2 Feel out or buzz the circuit 23
   8.3 Clean connections 23
   8.4 Ground end clamps 24
   8.5 Conductor end clamps 24
   8.6 Multiphase grounding required 25
   8.7 Removal of protective grounds 25
9. Protective grounding in powerplants and pumping plants 26
   9.1 Types of faults 26
   9.2 Powerplant grounding 26
   9.3 Tips on reducing calculated voltages 27

CONTENTS - Continued

Section **Page**

10. Protective grounding on transmission level systems 29
10.1 Types of faults 29
10.2 Application of grounds 29
11. Protective grounding on metal transmission line structures 30
12. Protective grounding on wooden structures and poles 31
13. Opening or splicing conductors 33
13.1 Opening or splicing at ground level 33
13.2 Opening or splicing above ground level 33
14. Induced voltages and currents on deenergized lines and equipment 35
14.1 Static voltage 35
14.2 Capacitive-coupled voltages 35
14.3 Electromagnetic-coupled voltages. 37
15. Protective grounding in substations and switchyards 39
16. Mobile equipment grounding 41
16.1 Grounding of mobile equipment in switchyards and substations 41
16.2 Grounding of mobile equipment on transmission or other uncontrolled area 41
17. Lightning 42
18. Connection to true earth 43
19. Care, inspection, and testing of protective grounding equipment 44
19.1 Care. 44
19.2 Inspection. 44
19.3 Testing. 44
19.4 Records. 46
20. Bibliography 48

APPENDIXES

Appendix

A. Technical Considerations in Protective Grounding A1

B. Fault Current Calculations B1

C. Current and voltage relationships of
personal protective grounds and workers C1
Impedance . . . . . .
Loop theory. . . . . .
Three phase applications of loop theory. . . .

D. Field Testing of Portable Protective Ground Cables D1

E. Results of Testing at Hoover Powerplant E1

TABLES

Table **Page**

1 Quantitative Effects of Electric Current on People 3
2.1 Maximum Fault Current Capability for Grounding Cables
ASTM F 855 8
2..2 Current Carrying Capabilities of Copper Grounding Cables
EPRI RP2446 9
3 Grounding Clamp Ratings 16
4 Grounding Cable Ferrule Ratings 16
5A Characteristics of Conductors 20
5B Distance Factors 20
6 Resistance at 20 °C and 25 of Class B Concentric Strands 21
Copper or Aluminum 21

FIGURES

Figures

1 Components of jumper resistance 17
2 Preferred method for attaching grounds to unit buses 27
3 Method to eliminate system fault currents on unit buses 28
4 Grounding jumper installation, suspension tower 30
5 Grounding jumper installation, dead-end tower 30
6 Grounding jumper installation two-pole structure 31
7 Grounding jumper installation, three-pole structure 31
8 Grounding jumper installation, three-pole ungrounded structure 32
9 Grounding jumper installation two-pole ungrounded structure. 32
10 Recommended procedure for splicing a conductor from a metallic
grounding mat. 32

1. DEFINITIONS AND INTERPRETATIONS

Grounding -	Physical connection to earth;
Ground -	Device for connection from conductor to earth. Generally has clamp to attach to conductor on one end and clamp to attach to ground on the other;
Jumper -	Device for connection from conductor to conductor. Generally has clamp to connect to conductor at each end.
Jumpering -	Low impedance connection within, between, among, and Around circuits and their associated equipment for the purpose ofbypassing inadvertent currents around the workers and/or worksite;
Voltage Drop -	Voltage differential across a circuit element due to an applied current;
Measured Voltage Drop -	Voltage measured due to an applied current. The total voltage drop is that as read by a voltmeter, which includes the resistive drop and the induced voltage.
Calculated Voltage Drop -	The voltage drop extrapolated from calculations or tests to that at maximum fault current;
Induced Voltage -	The voltage induced from current in one circuit Element that causes a voltage in another circuit element.
Fault or Fault Current -	Currents that will exist should a grounded piece of equipment become energized.

2. CURRENT - SHOCK HAZARD

Contrary to popular belief, it is current, not voltage, which damages the body. However, voltage is a factor because of its relationship to the body's impedance and resultant current. The current through the body is equal to the voltage applied to the body, divided by the impedance of the body. Therefore, a greater applied voltage will result in a greater current through the body. Also, a lower body impedance will result in a greater current flow.

The accepted minimum value of resistance for a worker's body is 500 ohms. While dry skin may have a resistance of 5,000 to 50,000 ohms, as can be easily checked with an ohmmeter, water or perspiration will reduce the resistance considerably. Punctured skin reduces the body resistance to about that of salty water. In addition, voltages above 240 volts readily penetrate the dry skin surface, leaving a small, deep burn. Five hundred ohms are used as the value of body resistance, to be on the conservative side.

The following criteria on the lethal effects of shock have been established:

a. Continued current passing through the chest in excess of a person's let-go current (16 milliamperes for a man; 10.5 milliamperes for a woman) may produce asphyxia, unconsciousness, and death. Currents less than let-go currents may cause accidents such as loss of balance or dropping of tools.

b. Ventricular fibrillation is probably the most common cause in death in electric shock cases and may be produced by moderately small currents that cause loss of coordination within the heart, rather than physical damage to that organ. When fibrillation takes place, the rhythmic pumping action of the heart ceases, and death rapidly follows.

c. Currents flowing through the nerve centers which control breathing may produce respiratory inhibition, which may last for a considerable period after interruption of the currents.

d. Cardiac arrest may be caused by relatively high currents flowing in the region of the heart.

e. Relatively high currents may produce fatal damage to the central nervous system.

f. Electric currents may produce deep burns which, if sufficiently large, could substantially raise the body's temperature, resulting in immediate death.

g. Delayed death may occur because of serious burns or other complications.

The values of body currents from perception threshold to certain death is shown in table 1 below.

A conservative safety rule is to limit body current to 150 milliamperes for no more than one-half second (30 cycles). Using 500 ohms as the body impedance, the maximum allowable applied body voltage is 75 volts (150 milliamperes multiplied by 500 ohms). Another criterion is to limit body currents to 200 milliamperes for no more than one-fourth second (15 cycles), or an applied voltage drop of less than 100 volts.

Table 1. - Quantitative effects of electric current on men and women

	Milliamperes					
			Alternating current			
	Direct current		60 hertz		10,000 hertz	
	men	women	men	women	men	women
l. Slight sensation on hand	1	0.6	0.4	0.3	7	5
2. Perception threshold	5.2	3.5	1.1	0.7	12	8
3. Shock - not painful, and muscular control not lost	9	6	1.8	1.2	17	11
4. Painful shock - painful, but muscular control not lost	62	41	9	6	55	37
5. Painful shock - let-go threshold	76	51	16	10.5	75	50
6. Painful and severe shock muscular contractions, breathing difficult	90	60	23	15	94	63
7. Possible ventricular fibrillation effect:						
a. 0.003 second shock	1300	1300	1000	1000	1100	1100
b. 3 second shock	500	500	100	100	500	500
c. Short shock	--	--	#	#	--	--
d. High-voltage surges	*27	*27	*13.5	*13.5	--	--
8. Ventricular fibrillation - certain death	Multiply values above for 3 second shock by 2-3/4. To be lethal, short shocks must occur during susceptible phase of heart cycles.					

# = K / square root of T
K = 116 for a 110 pound (50 kg) man
K = 157 for a 150 pound man
K = 165 for a 165 pound man
* Energy in watt-seconds or joules
T = time, in seconds

3. GROUNDING/JUMPERING

Grounding and jumpering are the keys to working safely on deenergized systems. For this volume, "grounding" is defined as a physical connection to earth, and "jumpering" is defined as the use of low-impedance conductors to make physical connections within, between, among, and around circuits and their associated equipment for the purpose of bypassing inadvertent currents around the workers and/or the worksite. Both grounding and jumpering are applicable to work on powerplant and pumping plant systems, transmission systems, overhead and underground distribution systems, substations, switchyards, and with mobile equipment used in these work situations.

4. BASIC CRITERIA FOR SAFE GROUNDING PRACTICES

Personal protective grounds must be designed , fabricated, and installed in a manner that satisfies certain basic criteria. A prerequisite in use of the basic criteria is that the maximum available fault currents and the time for clearing faults by protective relaying be determined for each powerplant, substation, and transmission line in the system, and grounding cables sized accordingly. Each region shall implement procedures to ensure the adequacy of protective grounds and shall periodically review grounding practices at each facility to determine the proper size, length, and number (if parallel grounds are required) of protective grounds. Regions shall maintain and periodically update a listing of the maximum fault currents at each facility or location in which Reclamation employees apply protective grounds. Table 2.1 on page 8 from ASTM F-855 lists the maximum fault current capabilities for several sizes of copper cables and the withstand rating may be used for selecting the proper cable for the fault currents anticipated in most applications. Table 2.2 on page 9 lists current carrying (melting) for 3 cases of different X/R and dc offset values. Regions may consider using the values from the worst case portion of this table for selecting the proper cable at locations near large sources of generation. An appropriate safety factor, usually 70%, should be used. Refer to paragraph 6.5 for more information on the affects of asymmetry (X/R) on grounding equipment ratings.

a. The personal protective grounds to be applied must be capable of conducting maximum fault current which could occur if the deenergized line or equipment becomes energized from any source. A ground or jumper which is sized to conduct maximum available fault current should be adequate to conduct the steady-state current(s) induced by electromagnetic coupled voltage on adjacent energized parallel lines.

b. The protective grounds and jumpers shall be capable of carrying the maximum available fault current for the following lengths of time to permit protective relays and circuit breakers to clear the fault: (For the purpose of clarity, the technical requirements for jumpers is the same as for grounds, therefore most references in this volume will be for grounds only).

(1) Thirty cycle clearing for transmission and distribution lines;

(2) Fifteen cycle clearing for switchyards; or

(3) Fifteen cycle clearing for powerplants.

c. The protective grounds shall be capable of withstanding a second energization within 30 cycles after a first inadvertent energization.

d. The protective grounds shall be terminated with suitable clamps which will not only conduct the required fault current, but will provide a mechanical connection that will not be torn loose by the forces generated by fault currents.

e. The protective grounds shall be easy to apply, satisfy the requirements of field application conditions, require minimum time and preparation for installation, and cover a wide range of usefulness. Standardization is desirable at each location to keep the number of sizes and types to a minimum.

f. The voltage across a worker while the protective ground is carrying fault current shall not be large enough to cause damage or permanent injury to a worker's body shunting the ground, for the time duration of the fault. One main purpose of a ground is to shunt around a worker's body, so that whatever he touches with his feet and his hands are at essentially the same voltage. This protective grounding shunt must be such (size and length) that the following values are not exceeded:

(1) Fifteen cycle clearing - 100 volts (200 milliamperes, body current); and

(2) Thirty cycle clearing - 75 volts (150 milliamperes, body current).

g. Grounds should be of adequate length, but excessive lengths should be avoided, since additional length will increase the resistance drop and, depending on geometry of the loop circuit, increase the voltage exposure to the worker. The previous bulletin recommended "as a general rule, ground lengths should be limited to 30 feet for transmission work (30 cycle or 500 millisecond clearing), and 40 feet in substations and switchyards (15 cycle or 250 millisecond clearing). Exceptions would include midspan work, and work on ungrounded wood-pole structures where the down leads may be as long as necessary. Lengths greater than 40 feet may be required for grounding mobile equipment before moving it into its final work location. EHV facilities, especially 500-kV and above, may require long leads." This volume does not make any such recommendations since, a cable can be adequate for one location and inadequate for another because of the fault values and location of the worker.

h. Personal protective grounding equipment should be maintained in tip-top condition and transported and stored properly.

i. Protective grounds must carry steady-state induced currents.

j. It is not intended for grounds or jumpers to withstand currents due to lightning or to provide adequate protection to the worker; therefore all outside work should be suspended when lightning is present in the area.

k. The conductor end of grounding cables shall be connected and disconnected with hot-line tools using sticks of adequate length.

j. Workers should be close to the grounds, but not so close as to be endangered by whipping of the cables due to high currents or be endangered by flash burns if the cables should fail or blow loose.

k. Where practicable, grounds should be restrained by ropes or other suitable means. **The grounds should not be bundled together.**

Table 2.1 - Maximum fault current capability for grounding cables
From ASTM F 855
Amperes, Asymetrical, RMS, 60-Hz

Cable size AWG	Fault time cycles	100% RMS kA Ultimate Capacity	70% RMS kA
		Copper	
	6	29	20
	15	18	13
2	30	13	9
	60	9	6
	Cont	200 A	
	6	47	33
	15	30	21
1/0	30	21	15
	60	14	10
	Cont	250 A	
	6	59	41
	15	37	26
2/0	30	26	18
	60	18	13
	Cont	300 A	
	6	74	52
	15	47	33
3/0	30	33	23
	60	23	16
	Cont	350 A	
	6	94	85
	15	59	53
4/0	30	42	38
	60	29	26
	Cont	250 A	
	6	111	100
	15	70	63
250 kvmil	30	49	44
	60	35	32
	Cont	300 A	
	6	155	140
	15	98	88
350 kcmil	30	69	62
	60	49	44
	Cont	350 A	

Table 2.2 Current Carrying Capabilities of Copper Grounding Cable Derived from EPRI RP2446

Table 2.2a Worst Case: X/R = 40; DC Offset = 90° Asymmetrical, kA, rms, 60-Hz

Copper Grounding Cable Size, AWG	6 Cycles	15 Cycles	30 Cycles	4,5 Cycles	60 Cycles	Continuous Current Ratiniq RMS, 60-Hz
#2	22	16	12	10	9	200
1/0	36	26	20	17	14	250
1/0	45	33	25	21	18	300
3/0	57	42	32	27	23	350
4/0	72	53	40	34	30	400
250 kcmil	85	62	47	40	35	450
350 kcmil	119	87	57	56	9	550

Table 2.2b Midrange: X/R = 10; DC Offset = 45^0, Asymmetrical, kA, rms, 60-Hz

Copper Grounding Cable Size, AWG	6 Cycles	15 Cycles	30 Cycles	45 Cycles	60 Cycles	Continuous Current Rating RMS, 60-Hz
#2	28	19	13	11	9	200
1/0	45	30	21	17	15	250
2/0	57	38	27	22	19	300
3/0	72	48	34	28	24	350
4/0	91	60	43	36	31	400
250 kcmil	108	72	51	42	36	450
350 kcmil	152	100	72	59	51	550

Table 2.2c Best Case: X/R = O; DC Offset = 0^0 , Symmetrical, kA, rms, 60-Hz

Copper Grounding Cable Size, AWG	6 Cycles	15 Cycles	*20* Cycles	45 Cycles	60 Cycles	Continuous Current Rating RMS, 60-Hz
#2	31	19	14	11	9	200
1/0	49	31	22	18	15	250
2/0	62	39	28	22	19	300
3/0	79	50	35	28	25	350
4/0	99	63	44	36	31	400
250 kcmil	117	74	52	43	37	450
350 kcmil	165	104	73	60	52	550

5. PARALLEL GROUNDS

When two or more sets of grounds are placed in parallel at a specific worksite, care must be taken to ensure that the sets are identical in cable lengths, cable sizes, and clamps, and that each set is applied to clean conductors. The division of current among parallel grounds depends upon the total impedance of each ground set, including connection impedance. The voltage induced at the worker is also influenced. Refer to Section 7 for more information on induced voltages from multiple grounds. If the current being carried by the grounds is near the thermal capacity of the grounds, the ground with the lower impedance could be overloaded. Overloading might cause it to fail, which would throw the total load on the other ground(s) causing it(them) to also fail.

Since installing identical parallel grounds is not normally practical, a derating multiplier factor of 1.8 is recommended for two grounds in parallel, and 2.6 for three grounds in parallel. For example, two No. 2/0 AWG copper cables rated at 20,000 amperes individual can carry 36,000 amperes (instead of 40,000) for 30 cycles in parallel (20,000 X 1.8 = 36,000).

6. GROUNDING EQUIPMENT

Personal protective grounds consist of appropriate lengths of suitable copper or aluminum grounding cable, with electrically and mechanically compatible ferrules and clamps at each end. In addition, appropriate hot sticks are required for attaching the conductor-end clamps to the conductors and cluster bars provide a low-resistive means of connecting the ground-end clamps. Each of these components will be discussed in the following subsections:

6.1 Grounding cables - Most of the grounding cables in use today are actually manufactured for another purpose, as welding cable. These extra-flexible aluminum and copper cables and their jackets can be expected to perform as grounding cables.

6.2 Jackets - Welding cables are nominally insulated at 600-volts. When used as grounding cable, the insulation or jacket serves primarily for mechanical protection of the conductor. It also serves to control the point at which the ground connection is made. The flexible elastomer or thermoplastic jackets are manufactured, applied, and tested in accordance with ASTM (American Society for Testing and Materials) standards and specifications. Black, red, and yellow jackets are usually neoprene rubber compounds, while clear jackets are ultraviolet-inhibited PVC (polyvinyl chloride). Some companies now use international orange jackets. All jackets should have the AWG size and conductor type stamped or printed repeatedly along the length of the cable. The clear jacket allows easy inspection of the conductor for strand breakage, but reportedly becomes stiff and hard at temperatures below 9 °C (15 °F). The possible cold-weather inconvenience far outweighs being able to observe the stranding and therefore clear jackets are not recommended for the colder areas.

6.3 Copper and aluminum conductor - Copper cables are generally preferred to aluminum; however, aluminum is about 75 percent of the weight of copper for the same current-carrying capacity (aluminum conductors must be two AWG sizes larger than copper for equal ampacity). Personal protective grounds are usually handled and lifted by the cable. Continuous flexing eventually breaks the conductor strands beneath the jacket, and aluminum strands fail more quickly than copper. Unfortunately, at this time, flexible aluminum cable is not manufactured with a clear jacket, so it is impossible to inspect the entire length of aluminum cable for strand breakage. It is strongly recommended that aluminum grounding cable be phased out and replaced with copper. Resistance of aluminum is more than for copper; however the induced voltage portion is dependent on the geometric mean radius and is the same for the same size cable be it copper or aluminum. Testing has not been performed on aluminum cable; however utilities have used it and assumed the rating to be equivalent to 2 sizes smaller of that of copper.

6.4 Size of grounding cable - The size of grounding cable must be selected to handle the maximum fault current anticipated. The minimum ground lead specifications are given in Reclamation Operation and Maintenance Safety Standards, except static grounds may be as small as #2 AWG.

6.5 Grounding clamps - Grounding clamps are normally made of copper or aluminum alloys, are sized to meet or exceed the current-carrying capacity of the cable with which they are used, and are designed to provide a strong mechanical connection to the conductor, metal structure, or ground wire/rod. Clamps are furnished in, but are not limited to, four types according to their function and methods of installation as follows:

a. Type I clamps, for installation on deenergized conductors, are equipped with eyes for installation with removable hot sticks;

b. Type II clamps, for installation on deenergized conductors, have permanently mounted hot sticks;

c. Type III clamps, for installation on permanently grounded conductors or metal structures, have tee handles, eyes, and/or square or hexagon-head screw(s); and

d. Other types of clamps are designed for specific applications, such as cluster grounds or underground equipment grounding.

Clamps may be furnished with smooth jaws for installation on copper, aluminum, or silver-plated buswork without marring the bus, or with serrations or crosshatching designed to abrade or bite through corrosion products on surfaces of the conductor or the metal structure being clamped. Several styles of conductor and ground-end clamps have jaws which can be replaced when the serrations have worn down. Self-cleaning jaws are recommended for conductor-end clamps used on aluminum or ACSR (aluminum conductor steel reinforced) conductor. Several styles of ground-end clamps are designed with a cup-point setscrew which can be tightened with a wrench (after the serrated jaws have been securely tightened) to break through paint, rust, and corrosion on the surface to be clamped.

The ball and socket clamp (type I) is recommended for use on generator buses and large cables. The ball stud is permanently attached to the bus. The socket end may be of singular design or a combination design that fits both the ball and circular conductor. The latter design may be equipped with a ball stud to facilitate jumpering between phases. An insulating boot is also available to protect from flashovers in enclosures.

The clamp size is the combination of main contact and ground cable size ranges as listed by the manufacturer. The main contact may connect to a conductor (cable) or

bus bar, or may be used at the "ground end" to connect to a variety of conductive grounded objects.

The design of commercially available grounding clamps takes into consideration the thermal and mechanical stresses developed by the magnitude of fault currents they may be required to conduct. The clamp design and integrity are then proven by rigorous tests before a manufacturer puts the clamp on the market. Therefore, no specialized field-fabricated clamps should be used for personal protective grounding until they have been proven satisfactory for the intended application by a controlled test program.

Revisions to the ASTM F-855 "Standard Specifications for Temporary Grounding Systems to be used on De-energized Electric Power Lines and Equipment" are under consideration for revision as of this writing. Table 2.2 (Table 8 in ASTM F 855) does not appear to tie in with the clamp and ferrule ratings and its use is unclear in selecting cable sizes. Furthermore the asymmetry factor limit of 20% is not appropriate in today's power systems. Clay King of A.B. Chance states, "The question of asymmetry is more basic, and raises questions of a technical nature. The maximum of 20% asymmetry is produced by an X/Y ratio of approximately 1.8. A typical substation X/R could be equal to 30 or 40, or even higher in some cases. The asymmetry produced by an X/R of 30 is 90%. ANSI (C37.09 is referenced for the method of calculation of current. The instantaneous peak current of a 20% asymmetry is 1.7 times the R.M.S. current value barely above a symmetrical current value of 1.414. For the grade 5, 43,000 Amp. R.M.S. the peak is limited to 73,100 Amp. The instantaneous peak current of a 90% asymmetry is 2.69 times the R.M.S. value or 115,670 Amp. This is a tremendous difference, and increases the mechanical forces appreciably, since force is a function of the current squared. The second problem comes from the extra heating associated with the time the current wave is offset from the zero axis."

Grounding clamp manufacturers have agreed that current-carrying parts made of copper-base or aluminum-base alloys shall have the following minimum material properties, when tested in accordance with ASTM E-8:

a. Copper-base alloy:

Tensile strength	30,000 lb/in^2
Yield strength	13,000 lb/in^2
Elongation	6 percent

b. Aluminum

Tensile strength	30,000 lb/in^2
Yield strength	20,000 lb/in^2
Elongation	3 percent

Several manufacturers' laboratory tests have found that aluminum as a clamp material is generally superior to bronze or copper for installations made on steel, aluminum, copper, or ACSR conductors under all test conditions. Field personnel generally prefer aluminum conductor end clamps because their lighter weight makes them somewhat easier to install with hot sticks.

6.6 Grounding ferrules - Grounding ferrules are required to attach the fine-stranded grounding cables to the clamps in a connection that is both electrically capable of conducting the required fault current, and mechanically strong enough to sustain the electromagnetically induced forces and stresses which may be imposed on the grounding system during faults. Ferrules are furnished in six types as follows:

a. Type I, compression ferrule, is cylindrical and made for installation on cable stranding by compression;

b. Type II, solder ferrule, is tubular and made for installation on cable stranding with solder;

c. Type Ill, plain, stud-shrouded compression ferrule, has a stepped bore that accepts the entire cable over the jacket;

d. Type IV, threaded, stud-shrouded compression ferrule, has a stepped bore that accepts the entire cable over the jacket and has male threads at the forward end;

e. Type V, bolted shrouded compression ferrule, has internal threads and a bolt at the forward end; and

f. Type VI, threaded, stud-compression ferrule, has male threads at the forward end.

All Bureau of Reclamation protective grounds must be equipped with threaded-stud compression ferrules. All grounding jumpers, cables, clamps, and ferrules shall meet all requirements of ASTM Designation F-855-83.

Ferrules are designed for a specific clamp-cable combination, and are tested for electrical and mechanical integrity of that combination by the manufacturer before being placed on the market.

Table 4 on page 14 lists the current carrying ratings for the different grades of grounding cable ferrules.

6.7 Assemblies - A ground consists of a length of cable assemblies with a ferrule and a grounding cable at each end of the cable. Grounds are usually assembled with a conductor clamp on one end of the cable and a ground-end clamp on the other. The conductor clamp could either have a permanently installed hot stick or an eye, to facilitate installation with a clamp stick (grip-all or shot gun hot stick). Other clamp combinations may be used for special applications.

Grounds should be of adequate length for the specific application, but excessive lengths should be avoided for two reasons. One is that the electromagnetic forces created during conduct of fault current on closely adjacent cables could cause a violet whipping action of the cables themselves; thus, slack in the installed jumpers should be held to a minimum to reduce potential injury to workers. The second reason is the increased resistance in the ground itself, due to the increased length of the cable. From a practical standpoint, Reclamation has established recommended maximum ground lengths of 30 feet for transmission lines (30-cycle clearing) and 40 feet for substation and switchyard (15 cycle- clearing). These lengths have been found adequate for most applications. If longer lengths are needed for a specific application, the maximum length of cable of a given size can be calculated as shown in section 8.

6.8 Hot Sticks - Section V of the ROMSS (Reclamation Operation and Maintenance Safety Standards) requires that the conductor-end clamp of the ground be attached to the conductor using hot sticks of suitable length for the nominal voltage of the line or equipment. Most Reclamation personnel use conductor-end clamps with eye screws for installation by means of clamp sticks. Hot sticks used for grounding should be given the same care, inspection, and testing as those used for hot-line work.

6.9 Grounding clusters/supports - Most grounding equipment manufacturers market grounding clusters of various types. These are useful when grounding metal tower lines for ensuring a low-impedance connection between the phase jumpers. On wooden pole structures, a grounding cluster must be used to connect the phase jumpers to the pole ground wire. If there is no pole ground wire, the cluster is connected to a driven ground rod with a fourth ground. In station grounding, a copper bar is sometimes used to connect the three-phase grounds and a fourth ground to a riser from the station ground mat. Various types of supports are marketed to facilitate mounting grounding clusters on metal structures and/or wood poles. Manufacturers' catalogs should provide sufficient information for procuring the most versatile grounding cluster/support combinations for specific job-site requirements.

Table 3 Grounding Clamp Ratings

Grade	Withstand Rating Symmetrical kA RMS, 60-Hz 15 Cycles	Withstand Rating Symmetrical kA RMS, 60-Hz 30 Cycles	Ultimate Capacity Symmetrical kA RMS, 60-Hz 15 Cycles	Ultimate Capacity Symmetrical kA RMS, 60-Hz 30 Cycles	Continuous Current A, RMS 60-Hz	Minimum Cable Size With Ferrule Installed
1	14.5	10	19	13	200	#2
2	21	15	30	21	250	1/0
3	27	20	38	27	300	2/0
4	36	25	48	34	350	3/0
5	43	30	60	43	400	4/0
6	54	39	71	50	450	250 kcmil
7	74	54	100	71	550	350 kcmil

Withstand and ultimare short circuit properties are based on performance with surges not exceeding 20% asymmetry factor.

Table 4 Grounding Cable Ferrule Ratings

Grade	Withstand Rating Symmetrical kA RMS, 60-Hz 15 Cycles	Withstand Rating Symmetrical kA RMS, 60-Hz 30 Cycles	Ultimate Capacity Symmetrical kA RMS, 60-Hz 15 Cycles	Ultimate Capacity Symmetrical kA RMS, 60-Hz 30 Cycles	Continuous Current A, RMS 60-Hz
1	14.5	10	19	13	200
2	21	15	30	21	250
3	27	20	38	27	300
4	36	25	48	34	350
5	43	30	60	43	400
6	54	39	71	50	450
7	74	54	100	71	550

Withstand and ultimare short circuit properties are based on performance with surges not exceeding 20% asymmetry factor.

7. CALCULATING GROUND SIZES AND DETERMINATION OF MAXIMUM AMPACITY

To avoid exceeding the safe limit of 150 mA body current for 500 millisecond (30 cycle) clearing, the voltage across the worker should not exceed 75 volts. Similarly, to avoid exceeding the voltage limit of 200 mA for 250 millisecond (15 cycle) clearing, the voltage across the worker should not exceed 100 volts.

The voltage across the worker is the sum of the voltages around a conductive loop formed by the worker and the ground. The voltage is determined by the resistance voltage drop of the ground and the induced voltage from the ground to the worker. More information on induced voltages is included in Appendix C, "Current and Voltage Relationships of Personal Protective Grounds and Workers."

The total resistance includes the resistance of the conductor surface to clamp contact, conductor, the resistance of the clamp, the resistance of the ferrule or socket which connects the cable to the clamp; the resistance of the length of the cable, the ferrule, and the clamp; and the resistance of the surface contact to the ground wire or rod. The connections, exclusive of the length of the cable, may be assumed to be 0.2 to 0.4 milliohms resistance. The resistance of the cable is the principal variable that determines the resistance of the ground.

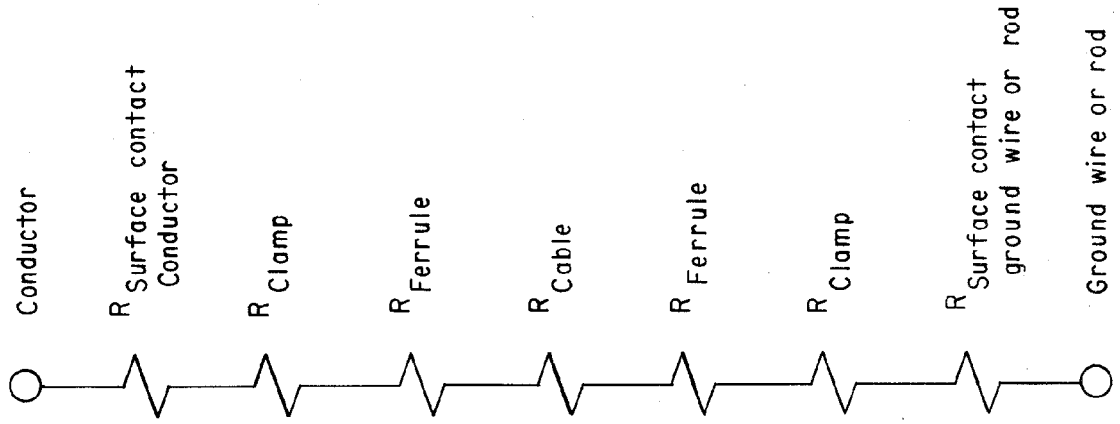

Figure 1. - Components of jumper resistance R_J.

To assist in calculating these voltages, Tables 5 (A and B) and 6 are included on pages 18 and lg. Tables 5A and 5B have been prepared in the "inductive reactance" format for convenience of those familiar with transmission line calculations.

7.1 Determine Minimum Current - The minimum current for the personal protective ground application should be determined. For assistance in calculating the currents, Appendix D may be used. Reasonable assumptions should be made regarding the fault currents that could occur during an unintentional reenergization. For generator

bus faults only three phase faults should occur for ungrounded or high-resistance grounded units connected to a delta transformer. The generator and transformer sources should be considered separately since, it is unlikely that both would be energized at the same time. For the bus terminal of a transmission line, the bus fault minus the line contribution to the bus fault should be calculated. For standardization only the maximum fault currents for various conditions should be used. For locations with relatively small fault current values, total maximum fault current values may be used for each bus.

7.2 Size the cables. - Based on fault currents, select a cable size from Table 2.1 or Table 2.2 for copper cable. The ampacities are also listed for 20 second clearing for applications involving low voltage conditions on a unit. For applications that need copper cable ampacities that are not listed, this office can furnish data for almost any combination of variables. This is the most important step in personal protective grounding, because a failed cable can result in an arc that could cause human burning and eye damage and the resistance voltage drop could exceed the established voltage limit.

7.3 Determine Voltages. - Determine the worker exposure voltages based on the conditions that the ground will be used. It is important to determine the distance from the ground to the location that workers will be in contact with the grounded equipment. The farther away, the greater the induced voltage.

Example 1. To find the voltage on a worker using a 25 foot length of No. 2/0 AWG copper cable in a location with 20,000 amperes of fault current available and a distance of 5 feet, proceed as follows:

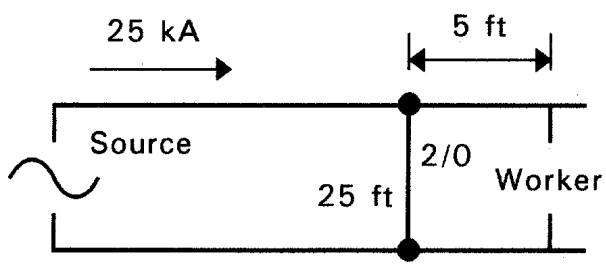

a. Find the resistance drop.

Assume resistance of other elements = 0.3 milliohms

IR = 20 x 25 x 0.0795 = 39.75 volts for the cable
= 20 x 0.3 = 6 volts for other drops
IR drop = 45.75 volts

b. Using Table 3 find the induced voltage.

V induced = 20 x 25 x 0.0994 = 49.70 volts at 1 foot
+ 20 x 25 x 0.0370 = 18.50 volts (distance factor)
= 68.2 volts at 5 feet

c. Find the total voltage around the loop.

V total = 45.75 +j68.2 = 82.12 volts

Example 2. Find the voltage on a worker with a length of 30 feet of No. 4/0 AWG copper connected to circuit with 35,000 amperes fault current. The circuit is open and a length of 2/0 copper cable is connected 20 feet away to a circuit with a worker an additional 10 feet away.

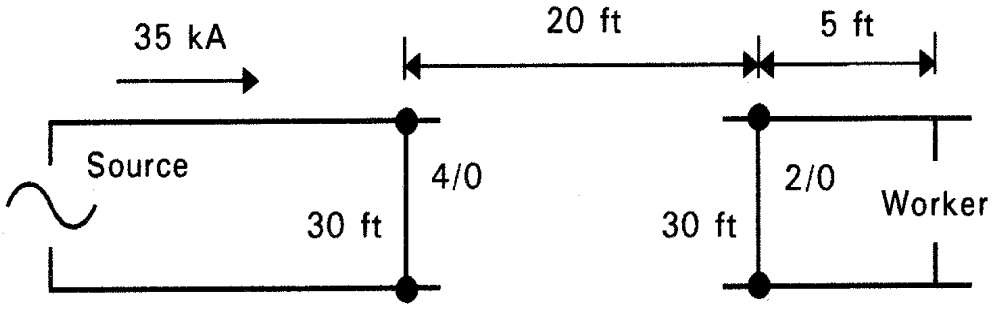

a. The resistance voltage drop need not be calculated, since this drop is not in the loop that involves the worker

b. Find the induced voltage on the 2/0 cable
V induced = 35 x 30 x 0.0941 = 98.8 volts at 1 foot
= 35 x 30 x 0.0689 = 72.4 volts (distance factor)
= 171.2 volts at 20 feet

c. Find the induced voltage at the worker.
V induced = 35 x 30 x 0.0941 = 98.8 volts at 1 foot
= 35 x 30 x 0.0782 = 82.1 volts (distance factor)
= 180.9 volts at 30 feet

d. Add the voltage around the loop.

V = j180.9 - j171.2 = j9.8 volts

Note this voltage could have been calculated by:
V = 35 x 30 x (0.0782 - 0.0689) = 9.8 volts

Table 5A. Characteristics of Conductors

Conductor Size, AWG or kcmil	Resistive Voltage Drop 20 °C per 1000 amps		Induced Voltage at 1 foot spacing per 1000 amps	Geometric mean Radius (GMR)
	volts per foot of conductor			
	Copper	Aluminum	Volts	Feet
2	0.159	0.262	0.1087	0.00883
1/0	0.100	0.165	0.1021	0.01175
2/0	0.0795	0.131	0.0994	0.01325
3/0	0.0630	0.103	0.0968	0.01483
4/0	0.0500	0.0821	0.0941	0.01667
250	0.0423	0.0695	0.0919	0.01842

The above values are for l000-volt insulated cable
Values for finely stranded 600-volt welding cable may vary slightly.

Table 5B. - Distance Factors

Feet	Induced Voltage per 1000 Amperes Volts	Feet	Volts	Feet	Volts
0.01	-0.106				
0.02	-0.0899	11	0.0551	31	0.0789
0.1	-0.0529	12	0.0571	32	0.0797
0.2	-0.0370	13	0.0589	33	0.0804
0.3	-0.0277	14	0.0607	34	0.0810
0.4	-0.0211	15	0.0622	35	0.0817
0.5	-0.0159	16	0.0637	35	0.0824
0.6	-0.0117	17	0.0651	37	0.0830
0.7	-0.00820	18	0.0664	38	0.0836
0.8	-0.00513	19	0.0677	39	0.0842
0.9	-0.00242	20	0.0689	40	0.0848
1	0	21	0.0700	41	0.0853
2	0.0159	22	0.0710	42	0.0859
3	0.0252	23	0.0721	43	0.0864
4	0.0319	24	0.0730	44	0.0870
5	0.0370	25	0.0740	45	0.0875
6	0.0412	26	0.0749	46	0.0880
7	0.0447	27	0.0757	47	0.0885
8	0.0478	28	0.0766	48	0.0890
9	0.0505	29	0.0774	49	0.0894
10	0.0529	30	0.0782	50	0.0899

Table 6. - Resistance at 20 and 25 ^{O}C for class B concentric strands copper or aluminum conductor

Resistance, in ohms per 1000 ft per conductor, for annealed uncoated copper or annealed aluminum

Conductor size, AWG or kcmil	Stranded Class B			
	20 ^{O}C		25 ^{O}C	
	Cu	A1	Cu	A1
24	--	–	–	–
22	--	–	–	--
20	10.3	–	10.5	--
19	–	–	–	--
18	6.51	--	6.64	--
16	4.10	--	4.18	--
14	2.57	--	2.62	--
12	1.62	2.65	1.65	2.70
10	1.02	1.67	1.04	1.70
9	0.808	1.33	0.824	1.35
8	0.641	1.05	0.654	1.07
7	0.518	0.833	0.518	0.850
6	0.403	0.661	0.410	0.674
5	0.326	0.524	0.326	0.535
4	0.253	0.416	0.259	0.424
3	0.205	0.330	0.205	0.336
2	0.159	0.262	0.162	0.267
1	0.126	0.206	0.129	0.211
1/0	0.100	0.165	0.102	0.168
2/0	0.0795	0.131	0.0811	0.133
3/0	0.0630	0.103	0.0642	0.105
4/0	0.0500	0.0821	0.0509	0.0836
250	0.0423	0.0695	0.0431	0.0708
300	0.0353	0.0579	0.0360	0.0590
350	0.0302	0.0496	0.0308	0.0505
400	0.0264	0.0434	0.0270	0.0442
500	0.0212	0.0348	0.0216	0.0354
600	0.0176	0.0290	0.0180	0.0295
750	0.0141	0.0232	0.0144	0.0236
1000	0.0106	0.0174	0.0108	0.0177
1250	0.00846	0.0139	0.00863	0.0142
1500	0.00705	0.0116	0.00719	0.0118
1750	0.00604	0.00992	0.00616	0.0101
2000	0.00529	0.00869	0.00539	0.00885
2500	0.00427	0.00702	0.00436	0.00715

8. APPLICATION OF PROTECTIVE GROUNDS

The Bureau of "Reclamation Operation and Maintenance Safety Standards" requires that all work on deenergized transmission lines, substation, and switchyard circuits shall be performed with visible (if possible) protective grounds and jumpers placed at the worksite. It is recommended that all the grounds be visible at the same time from a common point and they be placed within a few feet to each other if possible.

The Bureau of Reclamation has reinstalled transmission line terminal ground switches at installations and will install them on new installations unless specifically requested to not install them by the interconnection entity. Transmission interconnection is primarily with Western Area Power Administration and Bonneville Power Administration; however, Reclamation does have interconnecting points with other entities such as The Montana Power Company and Plains Electric. As of this writing, Western Area Power Administration and Bonneville Power Administration require terminal ground switches.

Where there may be high values of electromagnetic coupling such as near parallel EHV transmission lines the single-point method of grounding by applying personal protective grounds only at the worksite when performing transmission line maintenance may be requested by the interconnection entity. The clearance request must contain instructions to lock open and tag any terminal ground switches. Bonnevile Power Administration will decide on a line by line basis whether or not terminal ground switches will be closed. They will normally request at least one of the ground switches be closed for test purposes and then opened if required.

When applying the single-point method of grounding, great care must be used to ensure that the grounds are always intact. Where there is the possibility that the ground can be hit or come loose, parallel grounds should be placed. At locations such as deadends, where splices could come loose, grounds should be placed on each side of the splice. These precautions are necessary because the single-point ground is the only protection against harmful effects of static and capacitive-coupled voltages.

The single point method of grounding does not apply to work within a powerplant, pumping plant, or work on cables because of the limitations where grounds may be placed in these locations and the likelyhood of electromagnetic-coupled voltages and currents is small.

The following procedures have been developed for placing and removing protective grounds and jumpers:

8.1 Obtain a clearance - The establishment of a safe working condition on deenergized equipment always starts with a clearance. A clearance is a statement with documentation from the Operations Supervisor to the Job

Supervisor declaring that the equipment to be worked on has been deenergized and isolated from hazardous sources of energy. A clearance procedure is given in FIST Volume 1 - 1 entitled "Power System Clearance Procedure." Workers are prohibited from contacting supposedly deenergized electrical equipment with only the guarantee of a clearance. The equipment must also be felt out or buzzed first for the following reasons:

a. Induced voltages may be present on the equipment due to parallel energized lines and other sources;

b. Accidental energization can occur without any violation of the clearance, such as an energized line dropping on the deenergized equipment; and

c. The clearance process involves the possibility of human error.

8.2 Feel out or buzz the circuit - The first step after the clearance is obtained is to feel out or buzz each phase of the deenergized circuit with a hot stick, noisy tester, hot horn, or some other device suitable for the rated voltage of the circuit, to make certain the circuit is deenergized. Some of the devices for this purpose are described below:

a. Hot stick - At higher voltages, the metal ferrule on the end of a hot stick will buzz when brought into contact with the conductor if the circuit is still energized. However, for voltages of 69-kV and below, the buzz is not always audible;

b. Noisy tester - The noisy tester has a two-pronged metal fork with a ball at the end of one prong, and the other prong tapered to a point. The unit can be fitted to a hot stick. Touching the ball prong to an energized conductor will develop a corona on the pointed prong which can be heard;

c. Hot horn - The hot horn is a battery-operated device with a hot stick fitting, which gives a loud, audible signal when held near an energized part. It has two ranges, which aid in differentiating between line voltages and electromagnetically induced voltage; and

d. Neon-type indicator - For lower-voltage distribution or station-service circuits, a neon-type indicator held in a hot stick will give a good visual indication if the circuit is energized. However, if the deenergized line is parallel to an energized line, there may be sufficient voltage induced in the deenergized line to cause the neon tube to give a false indication.

8.3 Clean connections - To ensure the lowest possible voltage drop across the worksite, the ground connections must be clean. The surface of the ground wire, ground rod, or metal structure member to which the ground-end clamp is to be

applied is usually corroded, contaminated with dust or other foreign substance, or insulated by paint. Aluminum pipe bus or ACSR conductor to which the conductor clamp is to be applied will have a high-resistive oxide film. These surfaces must be cleaned by wire brushing before the grounding clamps are installed, or self-cleaning clamps must be used.

a. Wire brushing - The clamp jaws should be brushed immediately before attachment, and the conducting surface itself should be cleaned before the clamp is attached. The conductor must be cleaned with a wire brush attached to a hot stick, since the conductor is considered hot until properly grounded. The cleaning effect of wire brushing is nearly gone within 20 minutes, so the clamp should be applied immediately after brushing.

b. Self-cleaning clamps - The flat-faced, self-cleaning clamp used to connect to a tower leg provides an extra margin of corrosion penetration. After the clamp has been lightly tightened, rotated, and then securely tightened on the tower member, the cup-pointed setscrew is tightened with a wrench to ensure penetration of any remaining surface contamination. The self-cleaning conductor-end clamp is installed lightly on the conductor, rotated a few degrees in each direction to clean the conductor, and then tightened.

c. Cor-Ten and painted steel tubular structures - Special precautions must be taken while grounding to a Cor-Ten structure or painted steel tubular structures. The protective oxide which forms on Cor-Ten steel is highly resistive, and grounding is accomplished best by welding or brazing a copper or carbon steel bar or nut (into which a copper or steel bolt may be screwed) onto a the Cor-Ten member as a mounting point for the ground-end clamp. If the structure is built in sections and fitted together with slip-joints, a low-resistance bonding strap must be installed across each slip-joint to ensure a low impedance path to earth. These same precautions apply to painted steel structures with slip-joints.

8.4 Ground-end clamps - The ground-end clamp of a ground shall always be applied first, whether connecting to a ground rod, pole ground wire, cluster bar, structure ground wire, or structure member. The clamp jaws and connection point should be wire brushed immediately before installation, and the clamp must be securely tightened to provide a good electrical bond and a secure mechanical connection.

8.5 Conductor-end clamps - The conductor-end clamps of grounds shall always be connected and disconnected by means of hot sticks of adequate length and capacity, after the clamp jaws and conductor have been cleaned as described in subparagraph 9.3.a. In applying the grounds to conductors, care must be exercised to stay clear of the grounding cables. The practice of holding the cable near the base of the hot stick to lighten the load on the head of the stick is strictly prohibited. It is recommended a coworker assist in applying heavy grounds by holding the ground cable with another

hot stick, or by using a shepherd hook with a pulley and nonconductive rope to hoist the grounding jumper into position. After the ground-end connection has been secured, the conductor-end clamps should be applied in turn to the nearest conductor or bus first, proceeding outward and upward until all phases have been connected.

8.6 - Multiphase grounding required - Protective jumpers shall be installed so that all phases of lines and apparatus are visibly and effectively bonded together in a multiphase short and connected to ground. Work on any phase of a multiphase circuit on which only one phase is grounded is prohibited, except that during live-line work, it is permissible to ground out phases or individual items of equipment as they are deenergized to provide easier and/or safer work on succeeding phases.

8.7 Removal of protective grounds - Protective grounds and jumpers should be removed in reverse order from installation, with the farthest jumper removed first. When performing certain tests such as Doble or dc ramp tests which require that the equipment be ungrounded, the ground leads may be temporary ungrounded to permit these tests as long as the ground is reestablished as soon as the tests are completed.

9. PROTECTIVE GROUNDING IN POWERPLANTS AND PUMPING PLANTS

9.1 Types of faults.

In most of our plants, the units are grounded through a neutral grounding transformer and connected to a delta winding on the low side (primary) of the step up transformer. Most faults will be three phase. If the neutral grounding is properly terminated, faults involving ground, except for a few amperes are not likely.

A properly terminated neutral involves the following:

a. The neutral conductor(s) must be insulated for the voltage of the machine.

b. Since the conductor generally has a semiconducting tape and a grounded metallic inner shield, the connection to the high voltage bushing of the transformer must be terminated such that the conductor can not arc to these elements during a fault when the conductor goes to line to neutral voltage. The various layers should be stripped in layers about 2 inches apart. Stripping the layers all at once (squared off) results in only a small air distance to withstand the voltage and would defeat the purpose of the neutral grounding scheme. Taping the termination is not recommended since, ordinary tape is insufficient, it gives false security, and prevents inspection of the termination.

c. In installations involving passage through a bushing in the transformer metal enclosure, as in most dry-type transformers, the cable must not be stripped or the bushing must be fully insulated.

d. The transformer and resistor must be properly maintained.

9.2 Powerplant Grounding

Three-phase tests conducted at Hoover Powerplant had a reduction from 22 volts to less than 2 volts when the phases were jumpered to each other and 1 ground connected from one conductor to ground. This is the recommended grounding method for powerplants because it gives the best voltage reduction and minimum interaction of whipping forces for three phase faults and still gives acceptable protection for the other types of faults. It is recognized that the locations for grounding are limited in most powerplants and must be placed where conditions allow. If jumpers can not be installed, then it is recommended that the grounds then be connected to ground at the same point to eliminant ground rise. By jumpering the phases together, current will be flowing only in the jumpers. The induced current will then be from shorter lengths of cable and ground rise will be eliminated. See Fig. 2 on page 27.

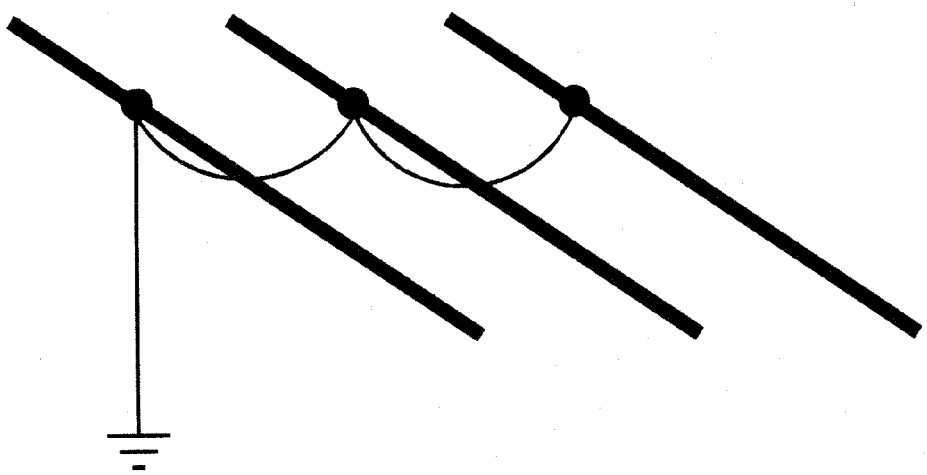

Figure 2. - Preferred method for attaching grounds to unit buses.

Closing of unit grounding switches is recommended. Make sure the unit has stopped rotating, since the current is independent of unit speed.

9.3 Tips on Reducing Calculated Voltages

a. Consider only 1 source at a time. It is not likely that more than one circuit would be energized at the same time.

b. Consider induced voltages from only the cables that are current carrying.

c. Eliminate sources. A unit that has a Clearance issued on it that is equivalent to one that permits workers to be on, in, or under rotating parts may be considered as not contributing fault current. A step up transformer that is disconnected from the system and grounded with an open between the transformer (or high voltage source) and the worker may be considered as not contributing fault current (see Fig. 3 on page 28). For locations with I unit connected to the step up transformer and no station service connection these 2 source eliminations eliminate all fault current. Although full size grounds are always recommended, for applications where it is difficult to place full size grounds, static grounds may be used after all sources have been eliminated. This is often required in cramped quarters when stator insulation testing is being performed.

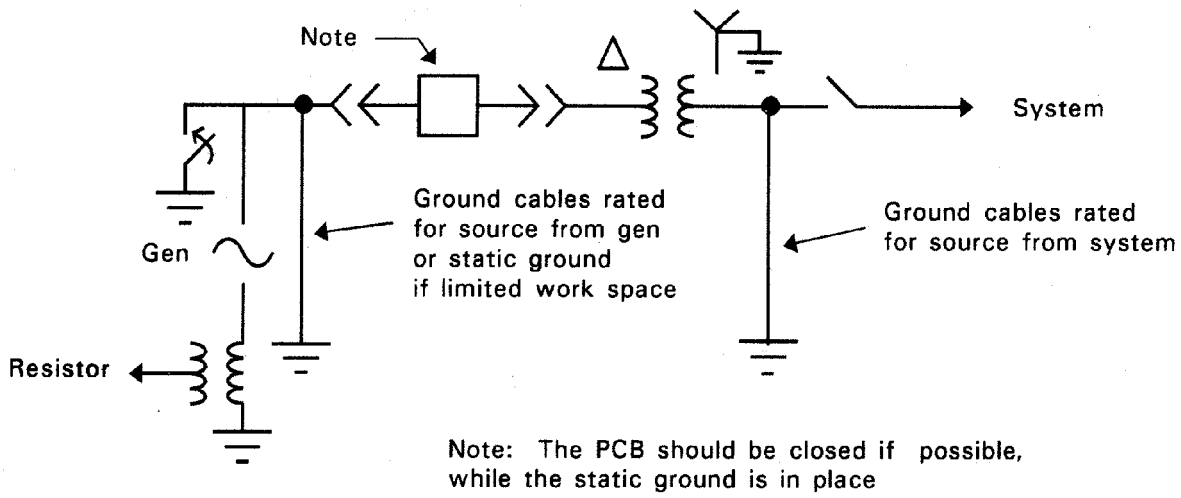

Figure 3. - Method to eliminate system for H currents on unit buses.

PROTECTIVE GROUNDING ON TRANSMISSION LEVEL SYSTEMS

10.1 Types of Faults

Since most of transmission level systems (transmission lines, substations, and switchyards) are wye grounded, faults can be of any type. By assuming three phase or single line to ground faults, we can be assuming worst case conditions. At a switchyard or substation with a source of zero sequence current (zig-zag or grounded wye with a delta main or tertiary winding), the single line to ground fault will normally be the most severe. The magnitude of this fault decreases more rapidly going out on a transmission than a three phase fault.

10.2 Application of Grounds.

For faults on substation, switchyard, and close-in transmission lines, the application of personal protective grounds should be to minimize effects of ground currents. A way to accomplish this is to provide more than one path for the currents in the grounds and at the connection to earth. This is accomplished by using multiple grounds as shown in Figs. 4, 5, 6, 7, and 9. in section 11.

The dangers of touch potential exist at all locations. The locations with good ground mats reduce this potential. Steel towers, by spreading out the current path also reduces this potential. Wooden structures offer the most danger - see Section 12.

11. PROTECTIVE GROUNDING ON METAL TRANSMISSION STRUCTURES

Protective grounds may be installed on transmission line steel-tower structures in several ways. On low-voltage lines, it may be practical and easier to ground the phases from positions on the structure near the level of the conductors as shown in figure 4.

On higher voltage lines, where the conductors are quite a distance from the structure, installation of the protective grounds is more advantageous from the bridge above the conductors. Grounding of dead-end structures is normally installed on the conductor jumpers as shown in figure 5. Note, the jumpers may or may not be supported by insulator strings.

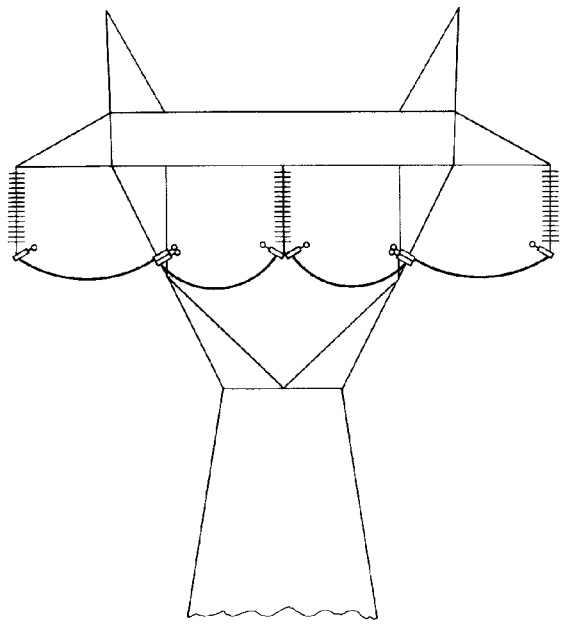

Figure 4. - Grounding jumper installation, suspension tower.

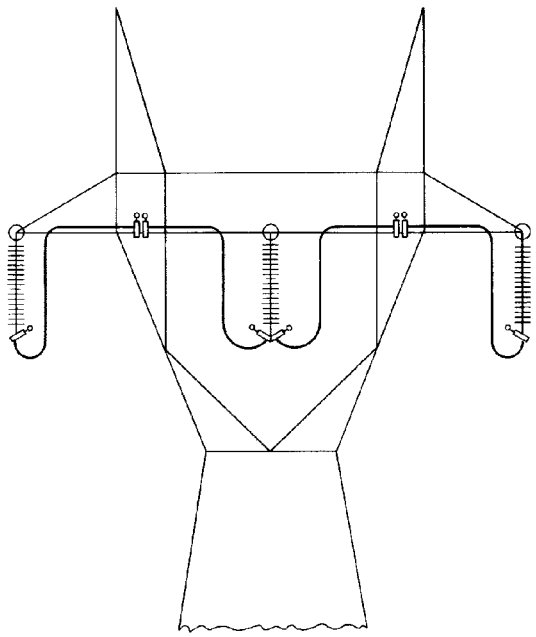

Figure 5. - Grounding jumper installation, dead-end tower.

12. PROTECTIVE GROUNDING ON WOODEN STRUCTURES AND POLES

Grounding cluster supports shall be mounted on the pole located below the lineman's feet during sustained work periods as in figures 6 and 7.

These grounding cluster supports shall be bonded to the pole ground wire at the mounting location and connected to the overhead ground wires and ground wires. Pole ground wires used for protective grounding shall be inspected before grounding to determine that they have not been cut, damaged, or removed. Grounding cables shall then be connected between the grounding cluster supports and the phase conductors to provide a solid three-phase bond. On structures without pole grounds, the grounding cluster supports shall be connected and to properly driven temporary ground rods, as shown in figures 8 and 9 on page 32.

The groundman shall stay clear (at least 10 feet) of down guys, ground rods, and static ground wires while protective grounds are installed to reduce touch potential, except when it is absolutely necessary to work near these features while the protective grounds are installed. Also, while personal protective grounds are being installed, workers should approach and depart the poles(s) on a fiberglass ladder or an insulated walkway, such as wood planks, at least 10 feet long.

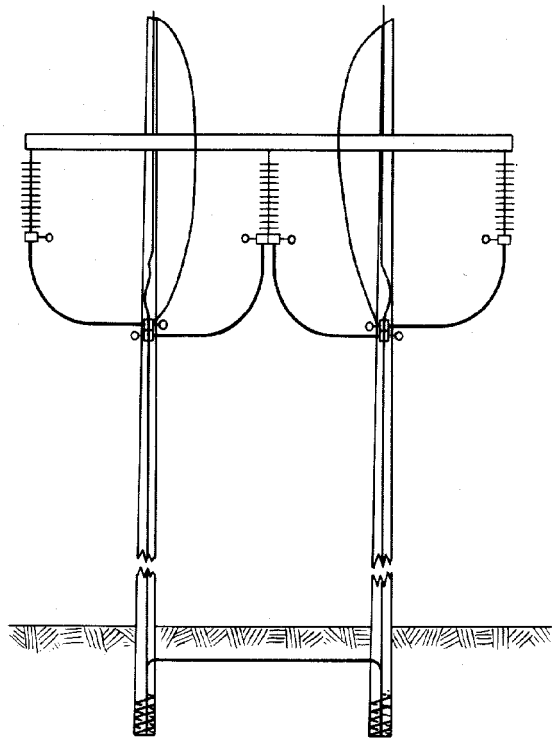

Figure 6. - Grounding jumper installation, two-pole structure (grounded structure),

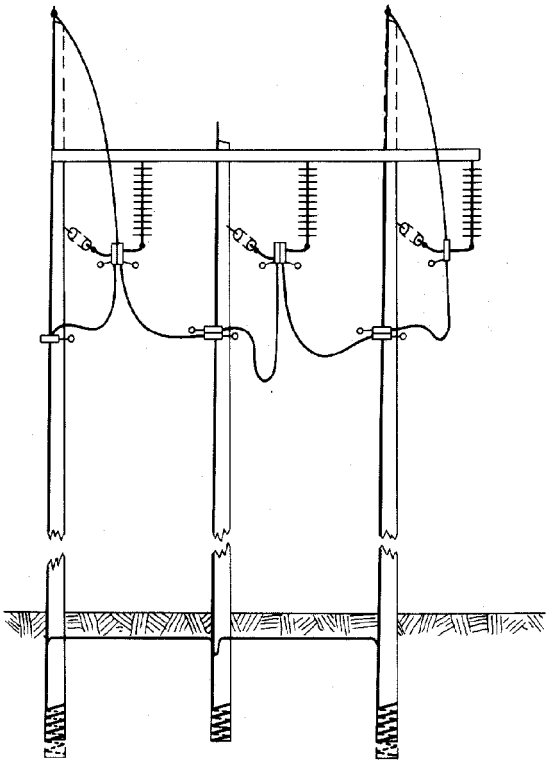

Figure 7. - Grounding jumper installation, three-pole structure (grounded structure).

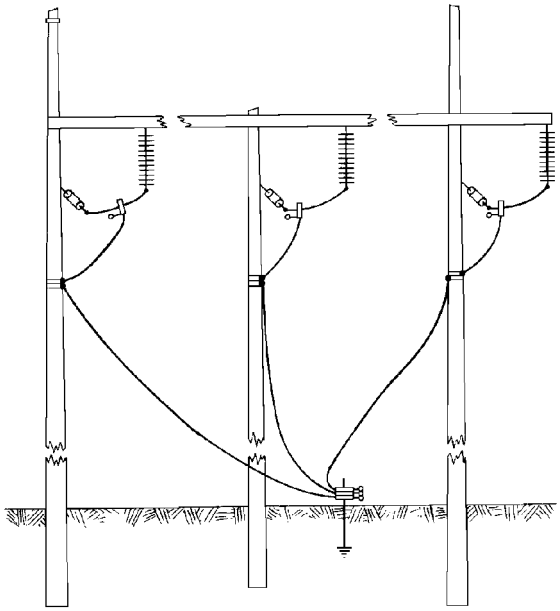

Figure 8. - Grounding cable installation, three-pole ungrounded structure.

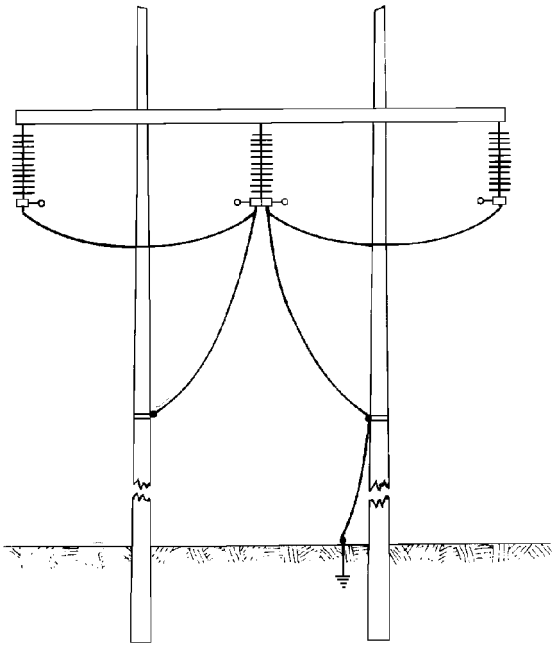

Figure 9. - Grounding cable installation, two-pole ungrounded structure.

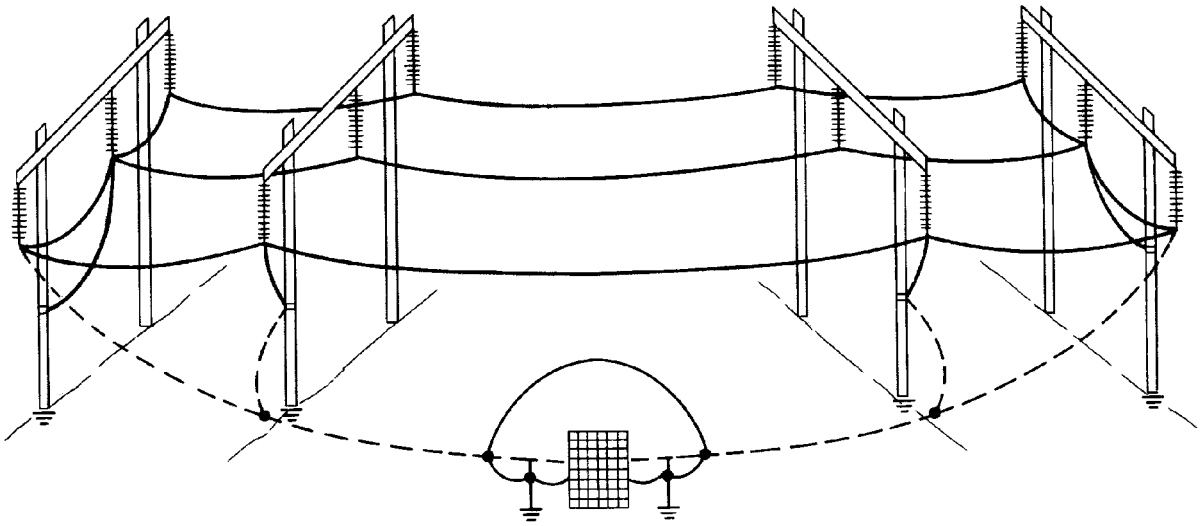

Figure 10. - Recommended procedure for splicing a conductor from a metallic grounding mat.

13. OPENING OR SPLICING CONDUCTORS

Before a conductor or an overhead ground wire is opened, it shall be grounded on both sides. Grounding is required to provide a nearly zero resistance between the open ends and to prohibit a voltage between the open ends and to prohibit a voltage between either one of the open ends and the ground surface at the worksite. To accomplish this, use one or the other of the following methods:

13.1 Opening or splicing at ground level - If a deenergized conductor is to be opened for splicing at ground level, or if the conductor is already severed with one or both ends lying on the ground, use the following procedures:

a. Place three-phase grounding sets at the second structure on each side of the worksite;

b. Place a ground on the damaged conductor at the first structure on each side of the worksite. Leave the ground attached as the conductor is lowered to ground level; or

c. Drive a ground rod on each side and within 10 feet of the worksite and apply grounds with hot sticks from the ground rods to each end of the conductor. The two ends of the conductor to be spliced shall be bonded together with a jumper. Splicing the conductor shall be performed on either an insulating platform, which can be made out of 2-inch dry planks, or on a conductive metallic ground mat such as chain link fencing which is bonded to both ground rods (fig. 10 on page 32). The grounding mat or insulated platform shall be roped off and an insulated walkway, such as a dry plank or a fiberglass ladder each at least 10 feet long, shall be provided for access to the mat.

13.2 Opening or splicing above ground level - If the deenergized conductor is to opened (spliced) above ground level from an uninsulated aerial platform, the following procedure is required:

a. Place three-phase grounding sets at the first structure on each side of the worksite;

b. Drive a ground rod, and then attach a grounding lead of sufficient length to reach from the work area to the ground rod and to a cluster bar bonded to the aerial platform;

c. Elevate the platform to the work area and attach grounding leads from the cluster bar to the conductor an both sides of the work area using hot sticks. (This will provide a jumper across the splice area and ground the platform); and

d. while the platform is bonded to the conductor, no one on the ground shall contact the equipment, and access to the truck shall be by insulated ladder.

14. INDUCED VOLTAGES AND CURRENTS ON ENERGIZED LINES AND EQUIPMENT

This section is intended to describe the electrical phenomena associated with induction, and to define terms so that a better understanding of the problems will lead to a better understanding of the grounding and safety requirements. The safety rules and working procedures in the ROMSS are intended to eliminate voltages that could lead to injuries or fatalities, and to minimize voltages which could produce annoying shocks since involuntary movements can themselves constitute a hazard. Personnel required to install and remove protective grounds can do so more safely and effectively when they understand the potential hazards.

Three types of voltages can exist on transmission lines and equipment that are disconnected from all normal sources (disconnect switches are open but no grounding is in place):

Static;
Capacitive-coupled; and
Electromagnetic-coupled.

14.1 Static Voltages - A direct-current charge or voltage can build up on an isolated line or equipment due to wind, friction, dry conditions, and dust. This direct-current voltage adds to any alternating-current voltage that is present. Adjacent lines or equipment that are energized have nothing to do with this voltage. A single ground connection will immediately drain off this charge, and bring the conductor to ground potential. Static voltages keep building up, and after a long period of time can be quite high. The discharge current associated with static voltage is relatively small and flows for only a fraction of a second.

Automobiles and trucks build up a static voltage due to friction of tires on the road and to wind friction. Today's synthetic tires are usually conductive enough to adequately drain off this charge. When walking on some types of carpeting, a voltage is built up on a person and then drained off at the first touch of something, such as a doorknob. This type voltage is normally of little concern on station and switchyard equipment, but can be hazardous on long insulated lines.

14.2 Capacitive-coupled voltages - Whenever two or more conductive surfaces (transmission line conductors and the earth) are separated by insulation (air), and one or more of such surfaces (transmission line conductors) are energized, charging currents will flow due to capacitive effect. Although these currents are too small to operate the protective relays to trip power circuit breakers, they are large enough to be potentially hazardous to personnel.

If a deenergized line or bus is insulated from ground but located near an energized

line or bus, it will become charged to a potential which is above ground or zero potential. When personal protective grounds are applied, the insulation is shunted, and the line or bus potential drops to ground potential at that point as the capacitive charge is discharged through the ground leads. The line or bus will continue to have a charging current through the ground leads. On long lines this can be as much as 10 to 20 milliamperes (the let go threshold is 16 milliamperes for 60-hertz currents). When the grounds are removed, an arc is drawn out, and a capacitive, and a capacitive-coupled transient voltage as much as twice normal steady-state, capacity-coupled voltage is created for an instant.

To have capacitive-coupled voltages, there must be energized lines (or equipment) in the vicinity. On parallel lines, the closer the energized line (or lines) to the deenergized line, the higher the voltage coupled onto the deenergized will be. The higher the voltage of the energized line, the higher the coupled voltage. The longer the lines parallel each other, the higher the charging current.

Any insulated object in the proximity of energized lines or equipment will have two capacitances associated with it: one capacitance to ground, and the other to the energized line or bus. The voltage assumed by the object depends on the relative value of the two capacitances. Generally speaking, the closer the object is to ground, the lower the voltage.

Consider a workman in a bucket on an insulated aerial lift or boom. When he enters the bucket at ground level, his voltage to ground is very small. As the bucket is raised toward the energized phase wire, the voltage between the bucket (and also the worker in the bucket) and the energized phase wire become less, and the voltage to ground becomes greater. When the bucket touches the energized phase wire, the voltage between the bucket and phase wire is zero.

In general, the charging currents encountered by workers near energized circuits are very small, on the order of 1/100th of an ampere (10 milliamperes) or less. A person can feel a current as low as 1 milliampere. A current of 2 to 10 milliamperes will shock a person, though not painfully. Nevertheless, 23 milliamperes of body current is painful and severe.

Some examples of capacitive-coupled voltages that have been measured on deenergized lines and equipment in the Sacramento area are:

Tracy Switchyard 230-kV transfer bus	2000 volts
Tracy Switchyard 230-kV transfer breaker	1750 volts
Tracy Switchyard 69-kV transfer bus	450 volts
Tracy-Contra Costa 69-kV Line	6170 volts
Keswick-Elverta 230-kV Line	3350 volts
Cottonwood-Elverta No. 2 230-kY Line	3400 volts

14.3 Electromagnetic-coupled voltages - When a transmission line closely paralleling another energized line is isolated from power sources and not grounded at any point, static, capacitive-coupled, and electromagnetic-coupled voltages all exist together in varying amounts on each phase wire. When one ground is placed, the static and capacitive-coupled voltages are drained away; however, the electromagnetic-induced voltages cannot be drained away from the complete line by grounds at one end nor by grounds at both ends.

The energized transmission line(s) that parallels the isolated line becomes the source of this voltage. The energized line(s) acts as the primary winding of a transformer, and the isolated deenergized line acts as the secondary winding. The voltage induced in an isolated line increases according to three factors:

(1) the longer the lines parallel one another;

(2) the closer the lines are to one another; and (3) the greater the load current in the energized lines. In other words, a transformer with a 1 to 1 turns ratio exists with a value of mutual inductance determined by line lengths, separation distance, and the magnitude of the load current.

Generally speaking, when a line is grounded on one end only, the induced voltage on the other end will be higher than anywhere else along the line. Transpositions tend to cancel out or reduce this voltage. No current will flow with only one end of the line grounded. When both ends of the line are grounded, current flows in each phase wire, down the ground on one end of the line, through the earth to the other end of the line and up through the ground to the conductors to complete the loop circuit. When both ends of a line are grounded and protective grounds are applied somewhere out on the line, the current will flow in the protective grounds, and two loop circuits are formed.

Electromagnetic-induced voltages on high-voltage lines can exceed 1,500 volts on very long lines which parallel other lines carrying heavy load currents. Currents can vary up to about 30 amperes on each phase, for a total of 90 amperes to ground. Such large currents are lethal and must be properly shunted to the tower steel or to a good ground connection.

Some steel towers and wood-pole structures located in dry or rocky terrain have a high resistance to true earth (footing resistance). This can vary from a few ohms to several hundred ohms. With large electromagnetic currents flowing in the protective grounds and high footing resistances, hazardous voltages can exist for personnel standing near the base of the structure and especially for personnel standing on the ground and touching the steel tower or static wire stapled down a wooden pole. These are sometimes referred to as step and touch voltages.

The largest electromagnetic-induced voltages and currents occur when the energized line on the other side of the tower develops a short circuit. The induced current may rise to many times the current previously induced by load current in the adjacent line.

Some examples of steady-state, electromagnetic-coupled voltages and currents that have been measured on deenergized lines in the Sacramento area are:

	Volts	Amperes
Tracy- Contra Costra 69-kV Line	600	49
Keswick-Elverta 230-kV Line	716	17
Shasta-Tracy 230-kV Line	1100	46

15. PROTECTIVE GROUNDING IN SUBSTATIONS AND SWITCHYARDS

Additional procedures and requirements exist for protective grounding of all electrical apparatus and circuits in excess of 600-volts in substations and switchyards.

On all electrical apparatus, the noncurrent-carrying parts such as transformer cases, circuit breaker tanks, oil storage tanks, rails, brake piping, screens, metal fences, and guards shall be permanently grounded by a copper conductor to the station ground mat. These grounds shall be physically inspected periodically to ensure a good electrical and mechanical bond, and shall not be removed while the equipment is in operation.

Personal protective grounds shall be in place on power circuit breakers and power transformers while workers are inside the equipment tanks or on top of the equipment, and within the minimum safe working distance of deenergized, current carrying components such as conductors and bushing terminals. Personal protective grounds shall be in place on transformers and oil circuit breakers before the oil is drained from the tanks and the tanks opened. Protective grounds shall be connected to a common copper equipment or structure grounding lead and then placed on each bushing lead of the equipment. Bushing leads may be disconnected from bushing terminals, as necessary to permit equipment testing as long as the grounds remain connected to the bushing leads. In performing certain tests such as Doble or Oscillographic contact tests, which require that the equipment be ungrounded, the ground leads may be temporary ungrounded to permit these tests as long as the ground is reestablished as soon as the test is completed.

Work on high-voltage disconnect switches and bus conductors shall be performed with visible protective grounds installed at the worksite and connected through a common copper ground lead to the station ground mat,

Work on high-voltage cables shall be done with protective grounds installed on the potheads at each end of the cable. When a cable is to be opened or spliced, grounds installed at the worksite if such grounding is feasible. Such grounds shall remain in place until the conductor is joined, after which the grounds may be removed for taping or reinsulation of the splice.

Grounding transformers shall not be worked on unless deenergized and grounded. Phase reactors shall be isolated from all energized sources and grounded before being worked on.

On wye-connected capacitor banks, in addition to grounding line terminals, the neutral shall also be grounded before working on the banks. On series capacitors, protective

grounds shall be in place on both sides of the capacitor as well as the deenergized parts to be worked on.

During oil-handling operations on oil-filled equipment such as transformers, regulators, and circuit breakers, the following precautions shall be observed:

a. All apparatus tanks, shielded hoses, pumping or filtering equipment, drums, tank cars, trucks, and portable storage tanks (pillow tanks, if conductive) shall be solidly bonded through a common ground to the station ground mat and

b. All exposed conductors such as transformer or circuit breaker bushings or coil ends of transformers with bushings physically removed shall be connected to the same ground cable.

When returning to work on a partially completed oil-filtering job after shutdown for any reason, all switching, bonding, and grounding should be checked before resuming the operations.

A large percentage of the accidents that occur involve a worker using an operating handle to open or close equipment. The use of a local operating mat will provide adequate protection of the worker should the operating handle become inadvertently energized. Two methods are used in the electric power industry to apply ground mats for operating handles. The mat can be an insulating type to isolate the person and, thus, interrupt any circuit path, or it may a conducting-type mat with a jumper connected from the mat to the operating handle. The standard practice of the Bureau of Reclamation is to use a conducting-type mat and bond the mat to the operating handle. Where a conducting mat is used, an insulating approach providing a means of entering or leaving the mat and/or work area should be used.

16. Grounding of Mobile Equipment

16.1 Grounding of mobile equipment in switchyards and substations - In switchyards and substations having ground mats, or at other locations where ground mats are used to control earth surface voltage gradients, mobile equipment should be connected (grounded) to the mat. Note that grounding the mobile equipment separate from the mat will allow a touch potential to develop between the mobile equipment and all other grounded objects in the vicinity. Chances of a person bridging between mobile equipment and grounded switchyard hardware are good due to the short distances involved.

16.2 Grounding of mobile equipment on transmission lines or other uncontrolled areas - Ground insulated and uninsulated mobile equipment to a connection to the ground mat or a ground rod driven about midway on one side of the vehicle. Never ground to the same point as the personal protective grounds. This will always minimize the step and touch potentials for insulated mobile equipment, and will minimize step and touch potential for uninsulated equipment when it is not touching the grounded circuit. When it is touching the grounded circuit, the point of attachment makes little difference.

17. LIGHTNING

Personal protective grounds cannot be relied upon to provide a complete protection to personnel from a direct stroke of lightning, or from a nearby stroke that occurs within the line of sight; thus, work shall not be performed while there is any indication of lightning in the area. This instruction must be applied to work on deenergized as well as energized lines and stations.

18. CONNECTION TO TRUE EARTH

Electrically speaking, true earth can be considered as a conductor deep in the earth with little or no resistance to electrical current. With this understanding, the resistance of a connection to true earth can be measured. Tower footing resistance is the resistance between the tower footing and true earth. Ground mat resistance has the same meaning. Each tower and structure has its own resistance to true earth, and these values can vary quite widely.

The top surface of the earth is not true earth. Current can and will flow along the top surface, but not very far, since it tends to go deep into the earth rather than horizontally along the top of the ground. The resistance at the surface of the ground can be very high depending on its condition - rocky, sandy, wet or dry. When current flows across the surface of the ground and to a ground rod or steel tower footing, a voltage can be developed that is hazardous to personnel on the ground.

On powerlines, the ground current flows down the steel tower legs (or the personal protective ground cable) to a ground rod, and then it spreads out at the ground surface around the tower legs or ground rod before going deeper into the earth. The closer a person is to the ground rod, tower rod, or the down guy, the greater the concentration of the current and the higher the voltage. The wider apart a person's legs are or the greater the distance from the legs on the ground to the hands on the steel, the larger the voltage difference across the body. For this reason, personal on the ground are cautioned to stay clear of structures at the ground level surface level.

An excellent article by Robert Hays on this subject is included in Appendix A.

19. CARE, INSPECTION, and TESTING of PROTECTIVE GROUNDING EQUIPMENT

Like any other tool of the trade, grounding equipment must be maintained in good electrical and mechanical condition.

19.1 Care - Grounds shall not be thrown into the bottom of the truck with other equipment or with equipment piled on top of them. Grounds shall be placed in weatherproof padded boxes or canvas bags for transportation, or carefully coiled and hung up the side of the truck. When not in use, grounds are to be stored in their transportation containers or hung up on the wall. Grounds with permanently connected hot sticks shall be transported and stored in the same manner as hot-line equipment.

19.2 Inspection - Periodically, preferably before each use, grounds shall be given a visual inspection. The cables shall be carefully examined to detect broken strands and other physical damage to the cable, particularly near the clamps and other areas of frequent flexing. Particular attention must be given to maintaining tight clean connections between the cable and the ferrule, and between the ferrule and the grounding clamp. Experience has shown this to be a weak point insofar as the current carrying capacity of the grounds is concerned.

Grounding clamps need to be inspected frequently and repaired when necessary. If a defective clamp cannot be repaired, it should be discarded and replaced. Serrated jaws should be cleaned frequently and replaced when they become worm or damaged. Worm threads on clamping bolts render a clamp useless.

19.3 Testing - In addition to the periodic inspections, an initial and annual voltage-drop test of grounds, including the clamps, are required.

As of this writing, test methods are under study by ASTM. The most promising method is the BPA "Millivolt Drop Test". This test and others are discussed below.

> a. Millivolt Drop Test Method - A dc test current, usually 25 amperes is applied to the personal protective ground. At least three voltage drop measurements are made. The BPA method is included in the appendix. Unfortunately BPA does not test the grounding clamps. Modifications to this method are required to test the clamps. A test rig was built by BPA and a similar one was built by this office to provide posts for the clamps to attach to and to automatically pierce the cables. The automatic piercing did not work properly for different sizes of cables. See Fig. 11 for a pictorial of the test board designed by BPA.

This method is recommended for the initial tests and annual tests.

To accomplish the tests, a board should be built with a round and a flat post to connect to the clamps. A good quality dc power supply with a current output and a good digital multi-meter is required. Pins should be used to pierce the insulation about 1 foot from the ferrule shoulder. Test current is applied to the posts and voltage drop measurements are made from ferrule shoulder (C) to the pin (D), from the pin (D) to the other pin (E), from the other pin (E) to the other ferrule shoulder (F-). The pin to pin measurement together with the length (between pins) of the cable, and the temperature may be used to ascertain required cross sectional area in new cables. Additional measurements may be made particularly for all-angle clamps in which measurements should be made across the cone area.

Some acceptable drops are included in the appendix. In a small sampling (around 20) of USBR personal protective grounds, a poorly pressed ferrule was found and a high resistance was found in the cone area of an all-angle clamp - the first was repressed and the latter was cleaned and returned to service.

b. Load Current Test - The test cable is operated at ac steady load current for a period of 2 minutes (300 A for 2/0 AWG copper). Feel along the length of the cable and at the ferrule ends for hot spots. Thermocouples may be used for more precise temperature measurements; however, this is time consuming. If no hot spots are found, increase the load current to 150% (450 A for 2/0 AWG copper). Again the tester should feel for hot spots. No definite pass/fail criteria has been established for the test.

This test may be destructive in nature and is only recommended for suspect cables.

If the grounds are equipped with spring strain relief devices, overheating may occur due to the inductive nature of the springs.

c. Low Current AC Voltage Drop Test - Apply 25 to 100 A to the cables (the board as in 19.3.a may be used) with the cables about 1 feet apart and off the floor and away from magnetic objects and measure the voltage drop from ferrule shoulder to ferrule shoulder. This test has no value other than to illustrate the inductive effects at 1 foot separation distance, and is not recommended as part of the preventive maintenance program.

d. High Current AC Voltage Drop Test - The previous "Power O&M Bulletin 5" recommended this test. Due to the rapid heating of the cable and the test geometry,

repeatability was difficult to obtain between different laboratories in round robin tests. Also the tests were destructive when tested by inexperienced testers. This test is not recommended.

19.4 Records - Each ground or grounding set shall be numbered or otherwise identified by means of a permanently attached tag, or the identification stamped on one of the clamps. A test record of the initial and annual tests for each ground or grounding set shall be maintained by the responsible office for as long as it(they) remains in service.

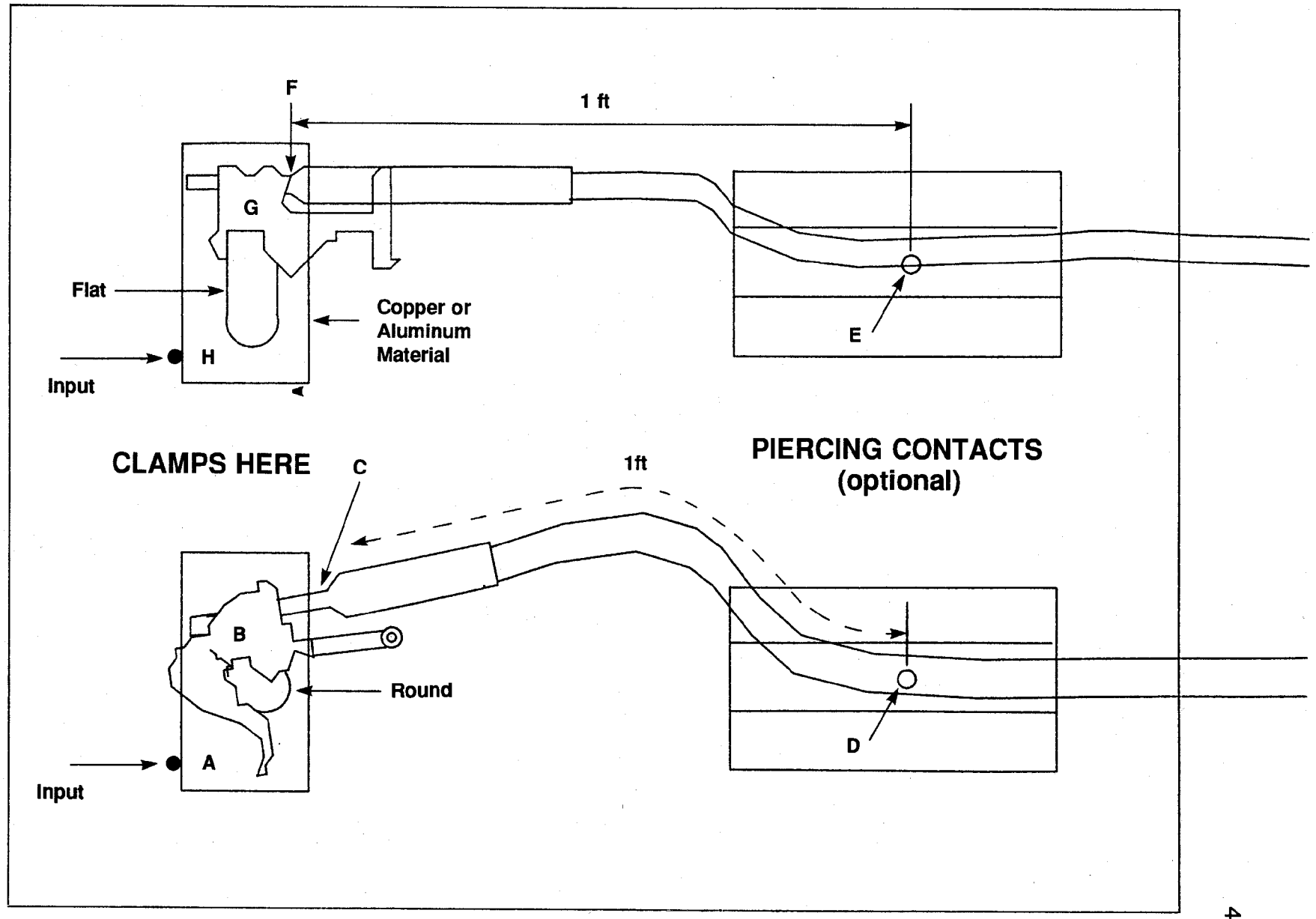

Figure 11. – Millivolt drop tester.

20. BIBLIOGRAPHY

"Personal Protective Grounding", Chapter 1, Power System Maintenance Manual, Western Area Power Administration, 1984.

Hays, R. L. "Substation Grounding for Personal Protection", Western Area Power Administration, February 1983.

"Safe Substation Grounding", IEEE Transactions on Power Apparatus and Systems, vol. PAS-100, No. 9, pp 4281-4290, September 1981.

Dalziel, C. F. and W. R. Lee, "Lethal Electric Currents", IEEE Transactions on Power Apparatus and Systems, vol. 6, No. 2 pp 44-50, February 1969.

"Power Clearance Procedure", Power O&M Bulletin No. 26
(FIST Volume 1-1), Bureau of Reclamation, January 1986

Dalziel, C. F., "Electric Shock Hazard, "IEEE Transactions on Power Apparatus and Systems", vol. 9, No. 2, pp 41-50, February 1972.

Grounding for Protection of Employees, Section 1926.954, Occupational Safety and Health Administration, pp. 179-184.

O,Brien, M., "Basic Rule in Personal Protective Grounding for Lineman", Transmission and Distribution, June 1983.

Code of Federal Regulation, Title 29, Labor, Part 1926, pp 172-186, July 1981

Reclamation Operation and Maintenance Standards, 1988.

Construction Safety Standards, Bureau of Reclamation, 1987.

Power System Analysis, William D. Stevenson, 1955.

Milano, B., P. Atwater, and G. Girgis, "Development and Presentation of a New Voltage Drop Calculation Procedure for use in the Application of Personal Protective Grounds", REC-EP-87-14, Bureau of Reclamation, March 1987.

Tingle, B., "Evaluation of Voltage Drop Method for Testing Personal Protective Grounds", REC -EP-87-31, Bureau of Reclamation, September, 1987.

Electric Power Research Institute (EPRI), "Fusing Research on Personnel Ground Cables", May 1987.

American Society for Testing and Materials, F 855, "Standard Specifications for Tempory Grounding Systems to be used on De-engixed Electric Power Lines and Equipment", 1990.

King, Clay, A.B. Chance, Letter to ASTM, 1992

Watson, Howard E. "Ground Cable Testing, Hoover Powerplant", September, 1992

Appendix A

THE TECHNICAL CONSIDERATIONS IN PROTECTIVE GROUNDING

B1. TECHNICAL CONSIDERATIONS IN PROTECTIVE GROUNDING ON TRANSMISSION LINES.

A. **Connection to True Earth.** Electrically speaking, true earth can be considered as a conductor deep in the earth which has little or no resistance to electrical current. With this understanding, the resistance of a connection to true earth can be measured. Tower footing resistance means the resistance between the tower footing and true earth. This also is the meaning of ground mat resistance. Each tower and structure has its own resistance to true earth, and these values can vary quite widely.

The top surface of the earth then, is not true earth. Current can, and will, flow along the top surface of the earth, but not very far, since it tends to go deep into the earth rather than horizontally along the top of the ground. The resistance at the surface of the ground can be very high depending on its condition--rocky, sandy, wet, dry, etc. Thus, when current flows across the surface of the ground and to a ground rod or a steel tower footing, a voltage can be developed that is hazardous to groundmen.

On powerlines the ground fault current flows down the steel tower legs, or the personal protective ground cable to a ground rod, and then it spreads out at the ground surface around the tower legs or ground rod before going down deeper. The closer a person is to the ground rod or the tower leg or the down guy, the greater the concentration of the current and the higher the voltage. The wider apart a person's legs are, or the greater the distance from the legs on the ground to the hands on the steel, the larger the voltage difference across the body. For this reason groundmen are cautioned to stay clear of structures at the ground surface level.

B. **Step Potential.** Step potential is caused by the flow of fault current through the earth. The current flow creates a voltage drop at the earth's surface. A person standing with feet apart bridges a portion of this drop. This places a potential difference from foot to foot. A test program was conducted to define the characteristics of this voltage drop across the earth. A rod was driven at a remote location. Voltage was measured at varying distances from the energized rod. A plot of the voltage distribution showed it decreases with distance from the rod, but in a nonlinear manner. A curve of resistance versus distance as developed by the James C. Biddle Co. is redrawn in Figure B1.

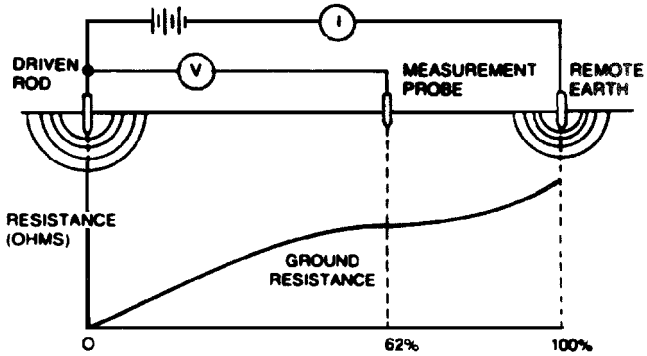

Figure B1
Distance from Driven Rod
Resistance vs Distance

This nonlinearity can be explained by considering the ground electrode as a system, consisting of concentric cylinders of earth, rather than just the rod itself, see Figure B2.

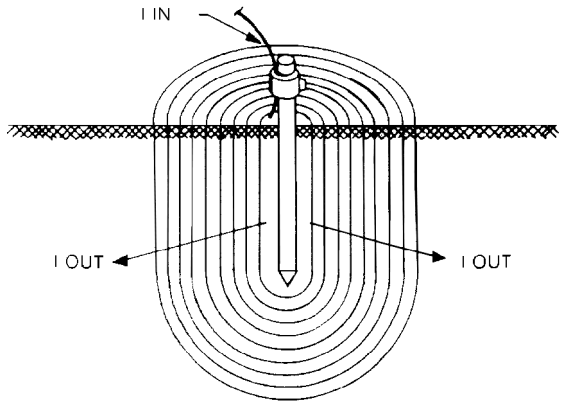

Figure B2
Earth Electrode System

Recall the basic equation for resistance of a conductor.

$$R = \frac{pl}{A}$$

Where R equals the resistance to current flow between two points, p = conductor resistivity, A is the cross sectional area of the conductive path and I the length of the conductive path. Current flowing into the rod is radiated in all directions from the rod and subsequently from each concentric cylinder as it flows to the remote station ground. Each concentric cylinder has a larger surface area than the preceding one. Therefore, resistance increases with each incremental increase in distance but by smaller amounts. Eventually, a point is reached where the outer shell has such a large surface area that any further increase adds little to the total resistance. At this point the resistance can be considered constant. It rises rapidly again as the measuring electrode intercepts the shells associated with the remote ground. The value of resistance finally attained is dependent upon the soil resistivity (p). Resistivity varies with the amount of soil moisture, salts present, temperature, and type. Resistance is further complicated by the rod diameter, length, number of rods used, and spacings. The actual current distribution in the earth is quite complicated because of levels or pockets of differing resistivities. It is similar to a series parallel impedence electric circuit.

To the step potential problem this means that a person standing near the point where fault current enters the earth may have a large potential difference from foot to foot. It also means that the potential difference over the same span will be less and less as the span is moved away from the fault current entry point. Figure B3 illustrates this.

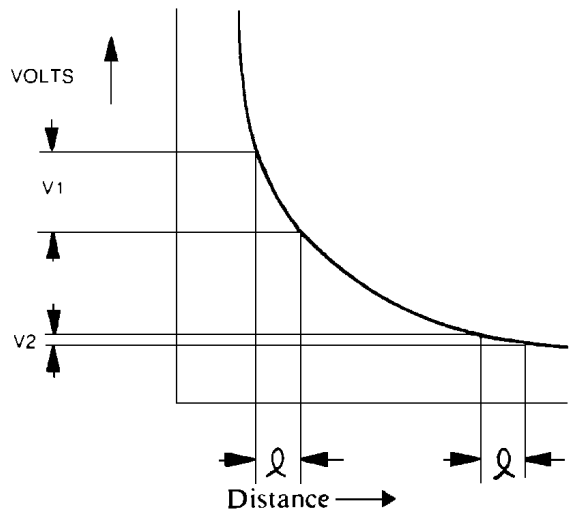

Figure B3
Variation of Step Potential With Distance

C. **Use of Protective Mats.** The use of a local mat will provide adequate protection for a worker. The mat may be either insulating, to isolate the person and interrupt a circuit path, or conducting, which maintains constant potential over the worksite walk area. The use of a conducting mat moves the problem area. The maximum voltage gradient now starts at the mat's edge. Therefore, a worker must remain on the mat to stay in a safe zone. An insulating mat should contain an insulated approach, providing a means of entering or leaving the work area safely.

D. **Touch Potential.** Touch potential is a problem similar to step potential. It involves a fault current flow in the earth establishing a potential difference between the earth contact point and

some remote hardware. Figure B4 illustrates touch potential.

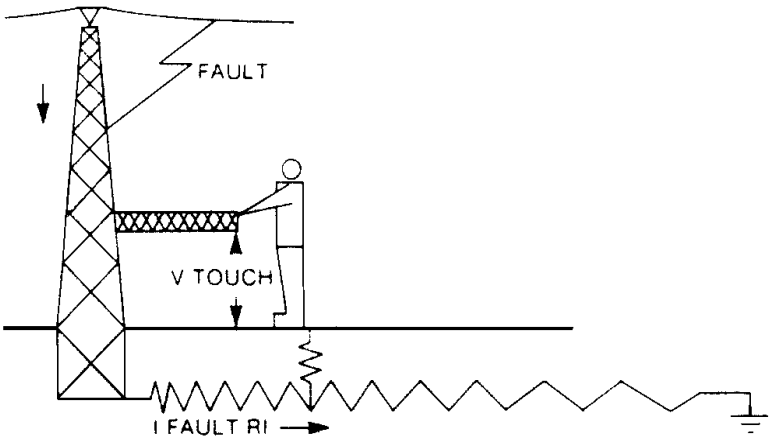

Figure B4
Touch Potential

Protection for touch potential is the same as for step potential, and this is the objective of Western's use of switch operating platforms. Again the worker must remain upon a local conductive mat as the highest voltage gradient has been moved to the mat's edge. Maximum step potential exists at the edge.

Single-Point vs. Double-Point Grounding. Another problem area created by fault current flow in the earth is the question of single-point versus double-point grounding. Single point is the placement of safety jumpers on the work tower only. Double point is the placement of jumpers on the tower on either side of the work tower. The work tower may or may not also have jumpers applied.

In the case of double-point grounding with no jumpers at the worksite, there will be no step-potential hazard. There is no current flow into the earth to create the hazard. The high-voltage gradients associated with the current flow are present at the two adjacent structures only.

However. a worker on the work structure in contact with energized hardware is in the worst possible position. The structure is at zero volts and with the hardware energized the full voltage is across the worker. The use of the third jumper set to develop a safe work zone eliminates this problem. The use of three safety jumper sets provides little additional protection above the use of a single set, properly placed, at the work-site. If adequate safety can be maintained with a single-jumper set, then the use of one versus three sets becomes a matter of economics not safety.

B2. TECHNICAL CONSIDERATIONS IN PROTECTIVE GROUNDING IN SUB-STATIONS AND SWITCHYARDS.

A. Substation Grounding System. In principle, a safe substation grounding design has two objectives:

(1) Provides means to carry and dissipate electric currents in electric currents into ground under normal and fault conditions without exceeding any operating and equipment limits or adversely affecting continuity of service.

(2) Assures such a degree of human safety that a person working or walking in the vicinity of grounded facilities is not exposed to the danger of a critical electric shock.

Some 3 to 4 decades ago, a great many people assumed that any object grounded, however crudely, could be safely touched. This misconception probably contributed to many tragic accidents in the past.

A low station ground resistance is not, in itself, a guarantee of safety. Since there is no simple relation between the resistance of the ground system as a whole and the maximum shock current to which a person might be exposed, a station of relatively low ground resistance may be dangerous under some circumstances*, while another station with very high resistance may still be safe or can be made safe by careful design.

For instance, if a substation is supplied from an overhead line, a low ground mat resistance is important because a substantial part of the total ground fault current enters the earth, causing an often steep rise of the local ground potential: Figure B5.

If a gas-insulated bus or an underground cable feeder is used, a major part of the fault current returns through the enclosure or cable sheaths directly to the source. Since this metal link provides a low-resistance parallel path to the ground return, the rise of local ground potential is ultimately of lesser magnitude; Figure B6.

*The sole exception is the case where IR, the product of the maximum short-circuit current flowing in the ground system and the resistance of the latter, represents a voltage low enough to be contacted safely.

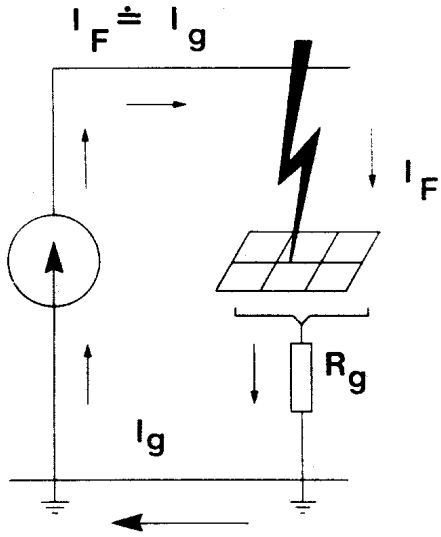

Figure B5.
Fault circuit for overhead line.

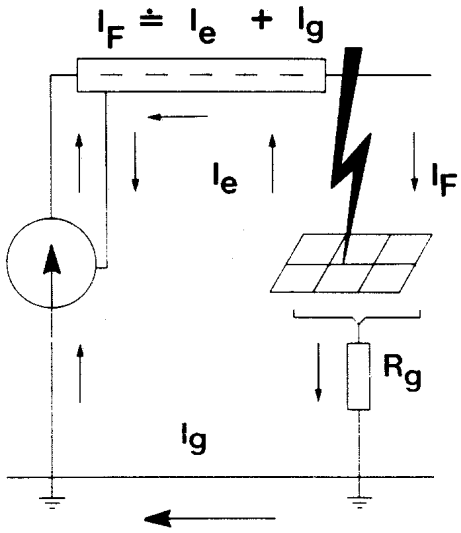

Figure B6.
Fault return circuit for cable or gas-insulated bus.

Nonetheless, in either case, the effect of that particular portion of fault current which enters and saturates the earth within the station area has to be further analyzed. If the geometry, location of ground electrodes, local soil characteristics, and other factors contribute to an excessive potential gradient field at the earth's surface, the grounding system thus might be inadequate despite its capacity to sustain the fault current in magnitude and duration, as permitted by protective relays.

Today there is much better understanding of the complex nature of this problem and more awareness of the multitude of factors which have to be taken into account, if the objectives of safe grounding are to be met.

Therefore, a practical approach to safe grounding always concerns and strives for balancing the interaction of two grounding systems:

(1)The permanent one, consisting of ground electrodes buried at some depth below the earth's surface; and

(2) The accidental one, temporarily established by a person touching a grounded object when standing or walking in the exposed area.

Conditions of Danger. Under typical ground fault conditions, the flow of current to earth will produce gradients within and around a substation. Figure B7 shows this effect for a station with a simple rectangular ground grid in homogenous soil, equipped with a number of ground rods along the perimeter.

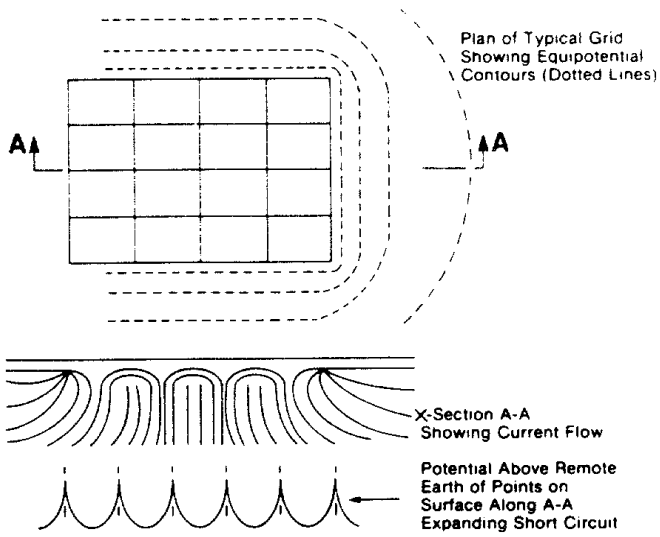

Figure B7.
Current and equipotential contours of a ground grid.

Unless proper precautions are taken in design, the maximum gradients along the earth's surface may be so great (under very adverse conditions) as to endanger a worker walking there. Moreover. dangerous potential differences may sometimes develop between structures or equipment frames which are "grounded" to the nearby earth.

A logical approach to solving this problem is first to determine the circumstances which make electric shock accidents possible. Typical of the type we are considering are:

(1) Relatively high-fault current to ground in relation to the size of ground system and its resistance to remote earth.

(2) Soil resistivity and distribution of ground current flow such that high-voltage gradients occur at one or more points on the earth's surface.

(3) Presence of the individual at such a point, at such a time, and in such a position that his body is bridging two points of high-potential difference.

(4) Absence of a sufficient contact resistance or other series resistance, to limit current through the body to a safe value, under the above circumstances.

(5) Duration of the fault and body contact, and hence of the flow of current through a human body, for a sufficient time to cause harm at the given current intensity.

(6) Coincidence of all the unfavorable factors above.

On one hand, a small study would show that it is absolutely impossible (short of abandoning entirely the distribution and transmission of electric power) to prevent at all times, in all places, and under all conditions, the presence of voltages which might be potentially dangerous.

On the other hand, a relative infrequency of accidents of this type in real life, compared to accidents of other kinds, is without doubt due to the low probability of coincidence of all the unfavorable conditions required.

However, neither fact relieves the engineer of the responsibility of seeking to lower this probability as much as he reasonably can, since fatalities due to gradients have occurred. Fortunately, in most cases, it can be reduced to a sufficiently low value by cautious, intelligent design.

C. **Typical Shock Situations.** Figure B8 shows four basic situations involving a person and grounded facilities during a fault.

(1) Step voltage is caused by the flow of fault current through the earth (resistance). It is defined as the difference in surface potential of two points at one pace (1 meter) distance experienced by a person bridging this distance with his feet without contacting anything else.

(2) Touch voltage is caused by a fault current flow in the earth establishing a potential difference between the feet on the earth contact point and the hand(s)in contact with substation equipment.

(3) Mesh voltage is the worst possible value of a touch voltage to be found within a mesh of a ground grid, if standing at or near the center of the mesh.

(4) Transferred voltage is a case of the touch voltage in a remote area, where the shock voltage may be approaching (or equal to) the full ground potential rise of a ground electrode.

Typically, the case of transferred voltage occurs when a person standing within the station area touches a conductor grounded at a remote point--or a person standing at a remote point touches a conductor connected to the station grounding grid. In both cases, during fault conditions, the resulting potential to ground may equal the full voltage rise of a grounding grid discharging the fault current, and not the fraction of this total voltage encountered in the "ordinary" touch contact situations.

D. Example and Discussion of a Touch Voltage. Probably the most common example of a touch voltage is the worker operating a disconnect switch with the remote possibility of the switch faulting to the structure. This condition is shown in Figures B9 and B10.

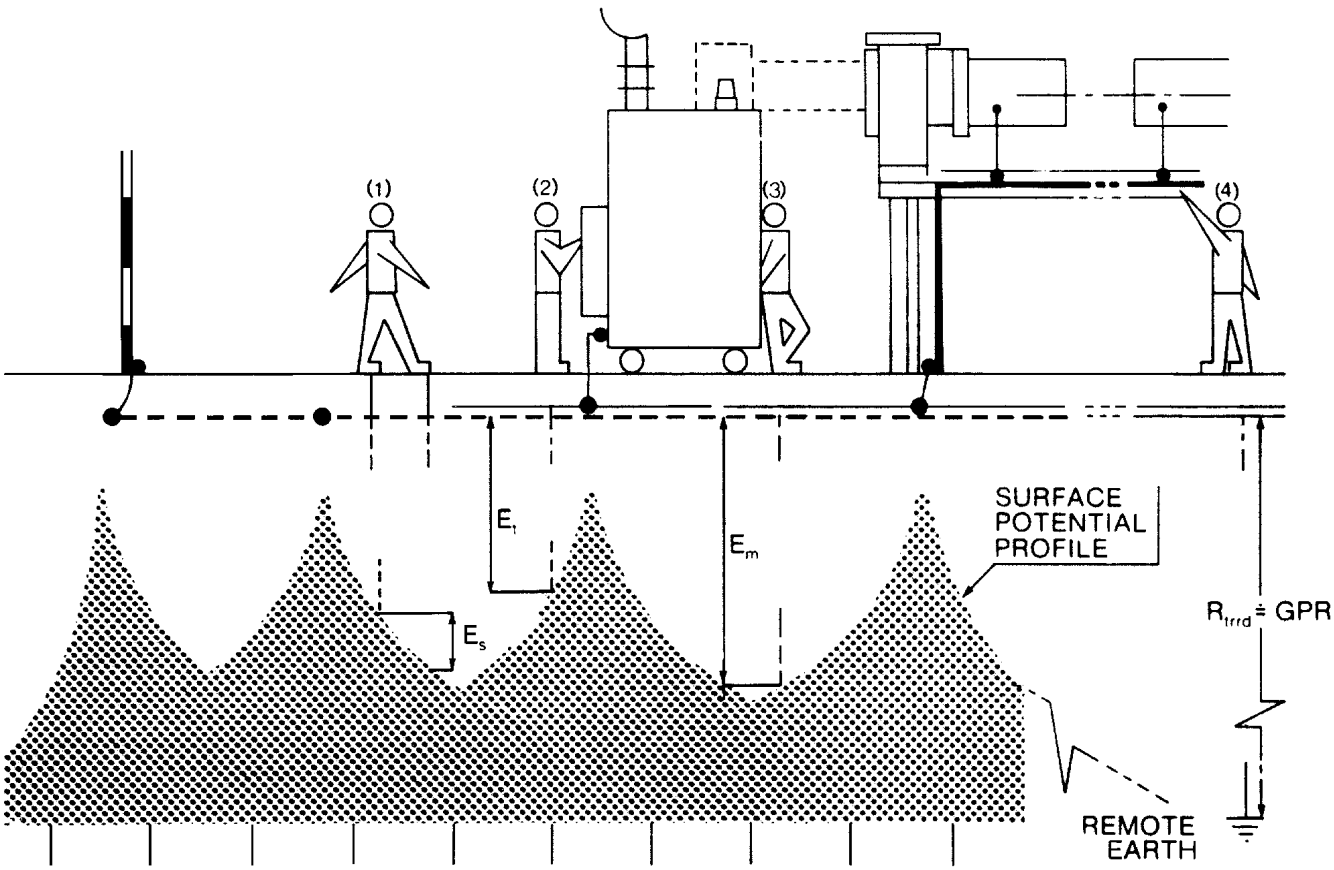

Figure B8.
Basic Shock situations

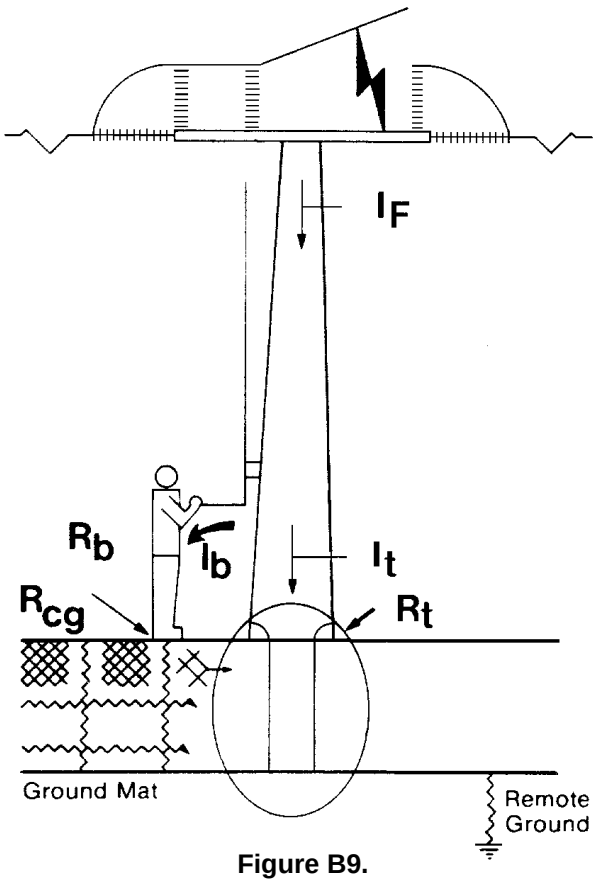

Figure B9.
Switching without switch operating platform.

In Figure B9, the operator places his body in parallel with the tower, and a portion of the fault current (I_F) will be shunted through his body. The current through his body is inversely proportional to the parallel resistance. The circuit is shown in Figure B11.

$$I_b = I_F \frac{R_t}{R_b + R_{cg} + R_t}$$

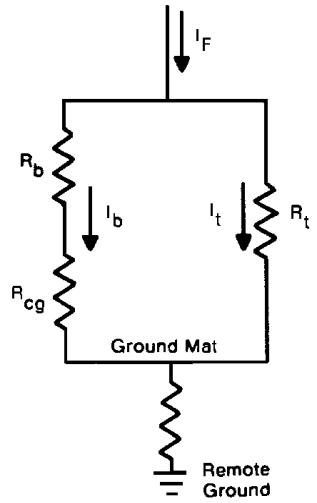

Figure B11.
Electric circuit for switch operator in Figure B9.

With good ground connections, the tower-to-ground mat resistance (R,) should not exceed 0.0005 ohm. Resistance of the operator's contact to ground (Rcq)is a minimal value of 50 ohms based on a ground resistivity of 35-ohm-meters. We will assume a fault. current of 50,000 amperes.

With these assumptions, the current through the operator's body (I_b) is 50,000 X 0.0005/550 or 45 mA, a safe value for 500 milliseconds (30 cycles).

The critical component in this system is R_t. A bad connection to the ground mat with an overall resistance of only 0.005 ohm would endanger the operator.

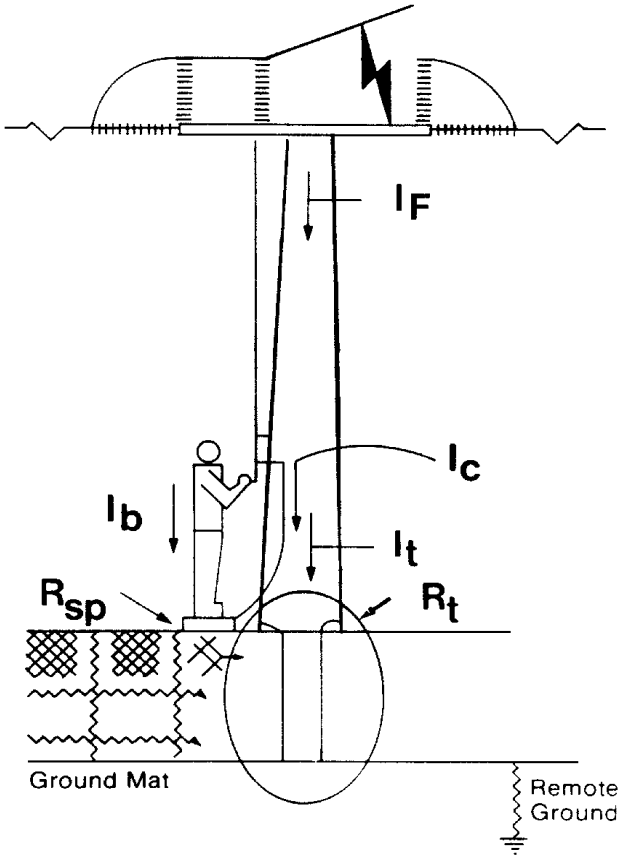

Figure B10.
Switching With switch platform.

Figure B10 shows a method to reduce the touch voltage hazard to the operator. The operator stands on a small metal platform that is connected by a low resistance cable (R_{c^1} 4/0 copper) to the operating handle. This reduces the potential between the operator's hand and feet to nearly zero.

$$I_{sp} = I_F \frac{R_t}{R_{sp} + \frac{R_b \times R_c}{R_b + R_c} + R_t}$$

$$I_b = I_{sp} \frac{R_c}{R_b + R_c}$$

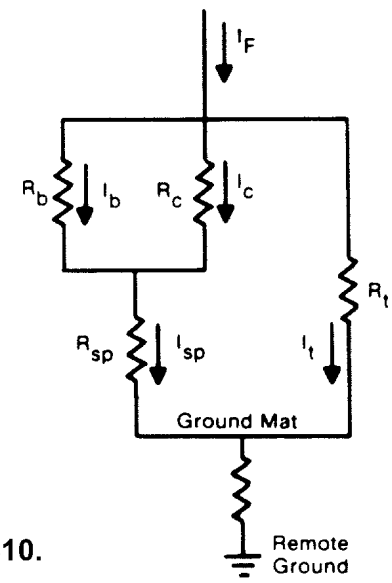

Figure B12.
Electrical circuit for switch operator in Figure B10.

Current to ground through the operating platform is now divided between the operator's body and the short (4-foot) 4/0 copper shunt connection. Four feet of 410 copper has a resistance of .0002 ohms (Appendix A, Table No. A4). Assume each connector has a resistance of .00015 ohms for a total resistance of .0005 ohms. These connections are visible for inspection. This circuit is shown in Figure B12.

Assuming a switching operating platform resistance to the ground mat (Rsp) of 1 ohm, then

$$I_{SP} = 50{,}000 \frac{0.0005}{1.0010} = 25 \text{ amperes}$$

$$I_B = 50 \frac{0.0005}{500} = 25 \text{ micro-amperes}$$

The current through the operator's body is now only 25 microamperes, and thus the addition of the switch operator's platform has reduced the current through the operator's body by a factor of nearly 2,000!

The magnitude of R_1, R_C , and R_{sp} affect I_b, I_b increases when R_1 increases or R_C increases or R_{sp} decreases. The worst conditions being when R_c increases to infinity (broken connection), R_t becomes high due to broken or bad connections to the ground mat, or R_{sp}, approaches zero (low resistance to ground mat).

For any one of the above three worst conditions, the current through the operator's body is limited to a safe value. In addition, any damage to the switch platform cable can be easily and visually detected.

E. **Sources of Hazardous Current on Deenergized Equipment.**

(1) Reenergization. Lethal current will appear on deenergized equipment if it is accidentally reenergized due to switching error or equipment failure. If the deenergized equipment has been properly grounded, the substation relaying should interrupt the current in 15 cycles (250 milliseconds) or less.

(2) Stored energy in capacitors.

(3) Voltage gradients induced by fault currents.

(4) Capacitor-coupled and electro-magnetic-coupled voltages. Because of the small lengths and areas involved in substations, these voltages are normally more nuisance than hazard.

F. **Grounding/Jumpering Requirements.** Our goal is to create and maintain conditions which limit the current through a worker's body to a safe value. To limit the current to a safe value, the voltage across the worker's body must not exceed 100 volts for 15 cycles (250 milliseconds) or 75 volts for 30 cycles (500 milliseconds), as we calculated in Appendix A. Section A3.

In practice, all points in the work area are maintained, as near as practical, at the same potential. This is accomplished by connecting (jumpering) all potential sources of electrical energy and conducting components with low resistance grounding jumpers. All jumpers are connected to a common point with the opposite terminals connected to the substation ground grid and to all potential energy sources. The frame of the equipment is permanently connected to the ground grid. No current path through ground can be in series with the low resistance grounding jumper between the potential energy sources and the common point. This is the principle known as "Single-Point Grounding," which was previously discussed in Subsection B1-D.

Appendix B

Fault Current Calculations

Fault currents for maximum conditions are generally available for transmission system voltages at our switchyards and substations. These fault current values can usually be obtained from the transmission agency or company. Both the three phase and phase to ground currents should be obtained for maximum conditions.

These currents may be expressed in fault studies in three ways:

1. Amperes
2. MVA
3. per unit current or per unit MVA on a MVA base

How to determine fault currents at transmission system voltages.

If expressed in amperes, then that value is used.

If expressed in MVA then

Ifault : $\frac{\text{MVA x 1000}}{\text{kV x square root of three}}$

Example 100 MVA at 230-kV bus voltage

Ifault: $\frac{100 \times 1000}{1.732 \times 230} = 251$ amperes

If expressed in per unit, obtain the base MVA then

Determine base current

Ibase : $\frac{\text{base MVA x 1000}}{\text{kV x square root of three}}$

Example 100 MVA base at 230-kV bus voltage

Ibase = $\frac{100 \times 1000}{1.732 \times 230} = 251$ amperes

Then determine fault current

Ifault : Ipu (per unit current) x Ibase

Example per unit current of 10

Ifault = 10 x Ibase (Ibase from above)

= 10 x 251 = 2,510 amperes

How to determine system equilvalent impedance

Use only the three phase values obtained from the above method for the system voltage.

Using the figure below:

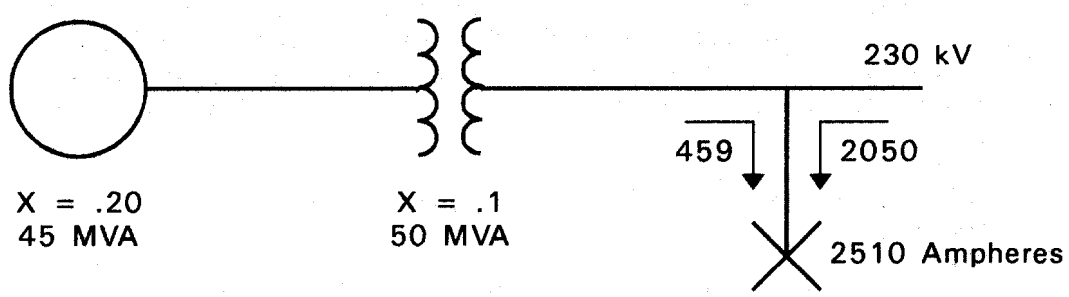

1. Select a common base for all components; for our example we will use 100 MVA.

2. At 230-kV bus find the per unit current

(a) If expressed in amperes

$$Ipu = \frac{\text{fault amperes}}{\text{base amperes}}$$
$$= 2{,}510/251$$
$$= 10$$

(b) If expressed in MVA

$$Ipu = \frac{\text{fault MVA}}{\text{base MVA}}$$
$$= 1{,}000/100$$
$$= 10$$

(c) If expressed in per unit at specified base, then use that value. If expressed in per unit at different base

$$Ipu\ new = \frac{Ipu\ old \times old\ base}{new\ base}$$

Example Ipu old : 20 at 50 MVA base

$$Ipu\ new: \frac{20 \times 50}{100}$$
$$= 10 \text{ at } 100 \text{ MVA base}$$

3. Convert impedance of generator to new base

$$Zg\ new = \frac{Z\ gold \times new\ base}{old\ base}$$
$$= 0.20 \times 100/\ 45$$
$$= 0.444$$

4. Convert impedance of transformer to new base

Zt new = 0.05 x 100/50

= 0.1

5. Determine impedance from unit to fault at 230-kV bus

Z = Zg + Zt

= 0.444 + 0.1

= 0.544

6. Determine fault contribution from unit

Ipu gen = 1/0.544

= 1.84

I gen = 1.84 x Ibase (at 230-kV}

= 1.84 x 251

= 459 amperes

We can now identify two sources for the 230-kV bus fault, since the total is 2510 and 459 amperes comes from the units, the system contribution is 2510 459 = 2050. Similarly the per unit system current is 10 -1.84 = 8.16.

The system equivalent Z impedance = 1/8.16 = 0.123

How to determine the three phase current for a fault on the generator voltage

Determine I base at generator voltage

$$\text{Ibase} = \frac{\text{MVA base x 1000.}}{\text{kV x square root of three}}$$

= 100 x 1000/1.732 x 13.8

= 4183

Refer to figure below which is a reduction of the previous figure

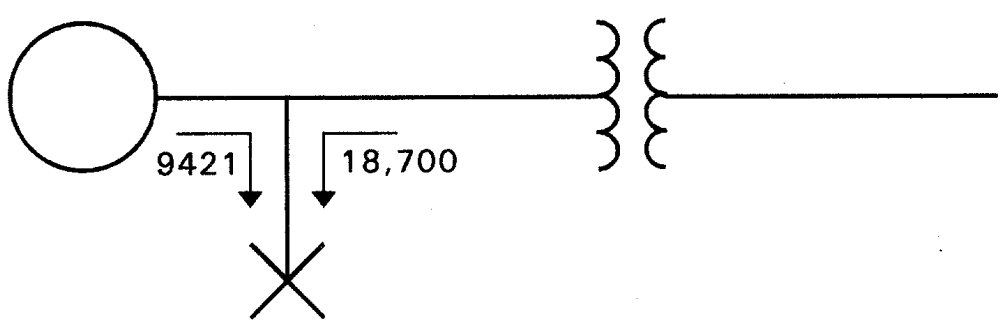

Contribution from unit

Ipu = 1/0.444 = 2.25

Ig = 2.25 x Ibase

= 2.25 x 4183

= 9421 amperes

Contribution from system

$Zpu = Zeq + Zt$

$= 0.123 + 0.1$

$= 0.223$

$Ipu = 1/0.223$

$= 4.48$

$I\ system = 4.48 \times 4183$

$= 18{,}700$ amperes

Appendix C

CURRENT AND VOLTAGE RELATIONSHIPS OF PERSONAL PROTECTIVE GROUNDS AND WORKERS

1 Impedance

The familiar table method used to calculate positive sequence inductive reactance for transmission lines assumes balanced current flow. That is for a single phase circuit, the currents are equal and in an opposite direction. For a three phase circuit the currents are equal and are phased at 120 degrees; the conductors are configured in an equal delta or an equivalent equilateral is calculated. The calculated inductive reactances are the same for either single phase or three phase; however, the total voltage drop for single phase circuits must use twice the values of the conductors. An example of a calculation is as follows:

Assume 4/0 19 strand copper cable
0.01668 ft geometric mean radius
1 ft and 5 ft spacing
10,000 amperes current
20 ft cables

R = 0.303 ohms/mile at 50 degrees centigrade
X_L = 0.497 ohms/mile at 1 ft spacing
X_L = 0.497 + 0.1953 = 0.6923 at 5 ft spacing

Reactive Voltage drop = 20 x 10,000 x .497/5280 = 18.8 at 1 ft

Reactive Voltage drop = 20 x 10,000 x .6923/5280 = 26.2 at 5 ft

The total voltage drop is equal to the vector sum of the resistive and inductive reactive drop or
The voltage drop is equal to $IR + jIX_L$

"Inductance is the property of the circuit that relates the voltage induced to the rate of change of current." Elements of Power System Analysis, William D. Stevenson Jr. Impedance is determined by resistance, internal flux, and external flux. Internal inductance and voltage drop are shown by the following equations. For power frequency this inductance is small enough to be neglected; however, it does affect ac resistance.

$L_{int} = 1/2 \times 10^{-7}$ Henrys/meter

$E = 2\ B\ f\ L_{int} \times I$ volts/meter

External flux induces a voltage according to the following formula:

$X_L = 2\ B\ f \times 0.7411 \times 10^{-3} \log\ (D/r)$ ohms/mile (Stevenson)

$= 4.657 \times 10^{-3}\ f \log\ (D/r)$ ohms/mile (Stevenson)

$= 0.2794 \log (D/r)$ ohms/mile at 60 hertz

$= 5.292 \times 10^{-5} \times L \times \log (D/r)$ ohms/foot at 60 hertz

where D = distance between conductors in feet
r = geometric mean radius of conductor in feet

L = Conductor length in feet

The formula can also be rearranged to

$$X_L = 4.657 \times 10^{-3} f \log (l/r) + 4.657 \times 10^{-3} f \log (D) \qquad \text{(Stevenson)}$$

This formula is the basis for the calculation of tables to show inductive reactance at 1 foot and spacing factors for other conductor spacings. It is rewritten below for feet instead of miles and at 60-hertz.

$$X_L = 5.292 \times 10^{-5} \times L \times \log (l/r) + 5.292 \times 10^{-5} \times L \times \log (D)$$

Although power system engineers commonly calculate an inductive reactance for a conductor and multiply it times its phase current to obtain inductive voltage drop, the reactive voltage appearing on a conductor is induced by currents in other current carrying conductors.

2. Loop Theory

The above statement and the summing of these currents around a loop are the basis for loop theory as presented by Atwater et al. By using loop theory, we can calculate the induced voltages in any closed loop. The basics involving the generation of this inductive voltage are as follows. The large current produces a high intensity magnetic field. The flux from this field will produce a voltage in any closed loop current path. The induced voltage is proportional to the amount of flux cutting the closed loop. Therefore, the magnitude of the induced voltage is directly related to the position and size of the closed loop. It therefore follows to minimize the possibility of large induced voltages on the grounds during fault conditions, one would be advised to keep the area of the loop made by the ground, associated conductive equipment and/or ground mat, and the human body as small as possible

Figure 1 illustrates the effects described above in terms of the existence of an air core transformer. The primary consists of one turn that carries the fault current. The secondary also consists of one turn in which a voltage is induced. Since the setup described is an air core transformer, the magnetic coupling is very small and unlike the high coupling that exists in an iron core transformer.

Some observations regarding Figure 1. on page C3 are as follows:

a. Voltmeter 1 reads the IZ drop (resistive plus induced voltage) along the length of the conductor at the distance of D.

b. Voltmeter 2 reads the IX drop (induced voltage) along the length of the conductor at the distance of D. Since there is no IR drop the reading is smaller than voltmeter 1.

c. Voltmeter 3 reads the IZ drop along the length of the conductor. Since the distance is closer than for voltmeter 1, the flux coupling the loop is smaller, therefore the reading is less. As the distance to the conductor approaches zero, the reading almost approaches the 60-Hz IR drop.

d. Voltmeter 4 reads higher than voltmeter 5 since more flux passes through loop 4.

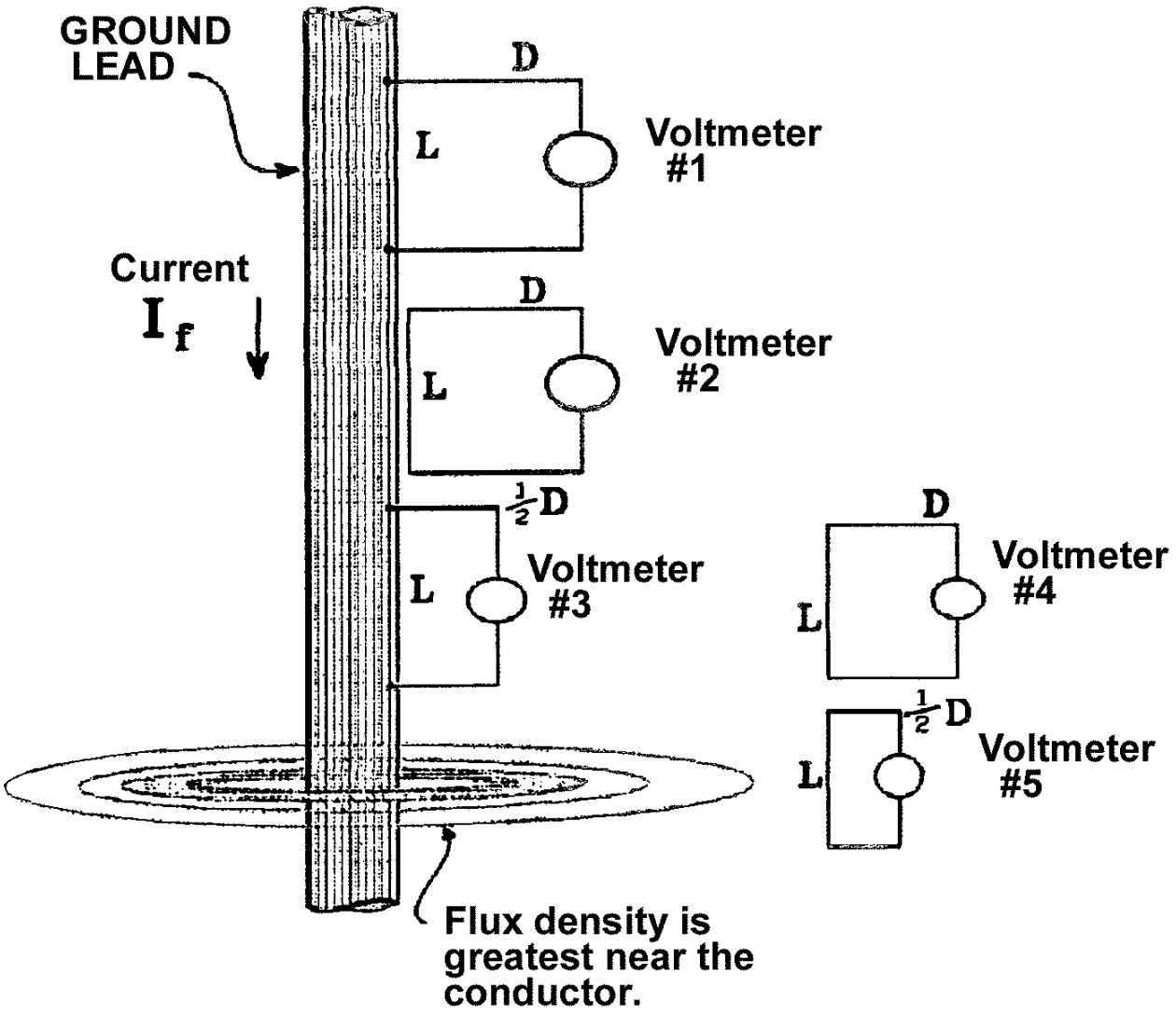

Figure 1. Illustrations of voltages induced in conductive loops.

Calculation of the induced voltages for all of the examples is possible using calculus. Since we are basically concerned with loops l, 2, and 3 and by assuming that the loop is always rectangular in shape and one side of the rectangle is formed with the personal protective ground, the voltage calculations can be made for each conducting path parallel to a current carrying conductor by using the same formula as for impedance above. Except to determine voltage, the formula is multiplied by current.

For the loop in figure 2:

The voltage induced from the ground to the path at the worker:

$V = 5.292 \times 10^{-5} \times L \times I \times \text{Log}\ (D/r)$

where L = length in feet
I = amperes
D = dimension in feet as shown
r = GMR of ground cable in feet
Log = common logarithm (base 10)

Using the same example as in the impedance calculation above

$V = 5.292 \times 20 \times 10{,}000 \times \text{Log}\ (1/0.01668)/100{,}000$

$= 5.292 \times 20 \times 10{,}000 \times (\text{Log}\ 1 - \text{Log}\ 0.01668)/100{,}000$

$= 5.292 \times 20 \times 10{,}000 \times [0 -(-1.778)]/100{,}000$

$= 5.292 \times 20 \times 10{,}000 \times 1.778/100{,}000 = 18.8$ volts at 1 foot

The complete voltage sum requires the vectorial addition of the IR component as well.

By substituting for Log 1, Log 5, the results for 5 ft separation is 26.2 volts.

From the above, it can be seen that there is no difference for calculating the voltages impressed upon a workman whether impedance theory or loop theory is used for closed loops that are connected to the personnel protective grounds.

Why Loop Theory

Since identical results can be obtained using either impedance or loop theory, why introduce a new theory? It is because loop theory can be used for a variety of grounding methods and types of faults. We may also use it to calculate the induced voltage in the ground loop at the worker due to the return current at the source. Refer to Fig. 2 on page C5.

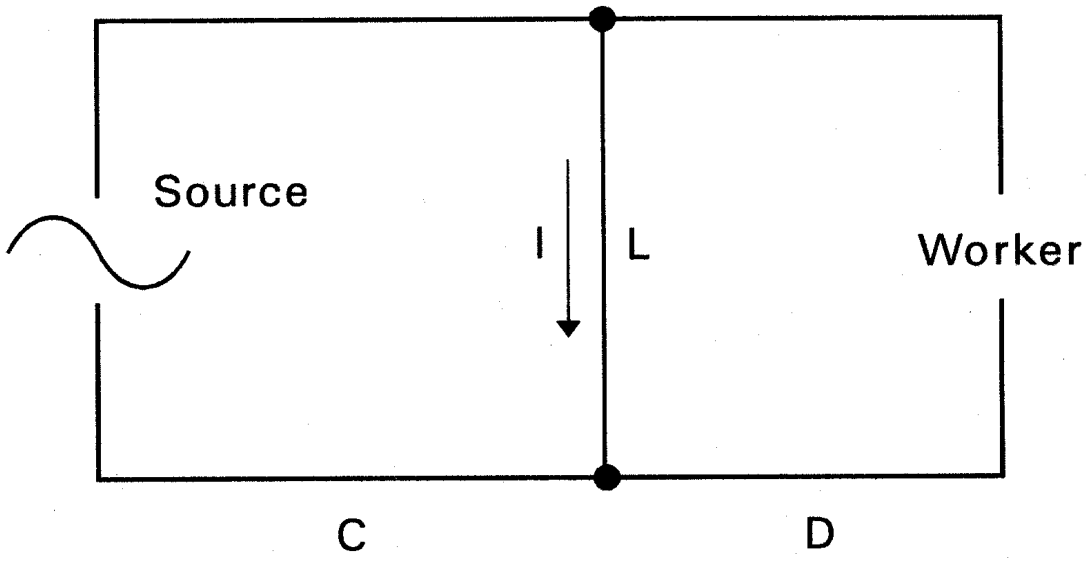

Figure 2.

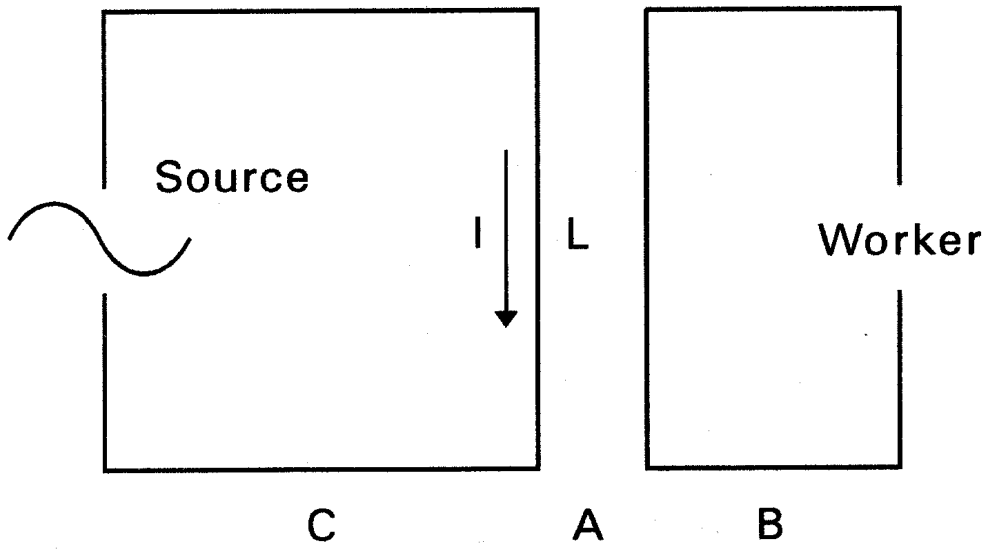

Figure 3.

From source to worker

V_{SW} = - 5.292 x 10^{-5} x *L* x I x Log ((D+C)/r)

From source to ground

V_{SG} = - 5.292 x 10^{-5} x *L* x I x Log (C/r)

The net effect is

- 5.292 x 10^{-5} x *L* x I x Log ((D+C)/r) - 5.292 x 10^{-5} x *L* x I x Log(C/r)

= - 5.292 x 10^{-5} x *L* x I x [Log ((D+C)/r) - Log(C/r)]
= - 5.292 x 10^{-5} x *L* x I x [Log (D+C) - Log r - Log C + Log r]
= - 5.292 x 10^{-5} x *L* x I x [Log (D+C) - Log C]
or - 5.292 x 10^{-5} x *L* x I x [Log (D+C)/C]

The negative sign indicates this voltage is subtractive from the voltage induced from the ground because the source current is of opposite polarity. We can usually assume the effect of the source is nil because of the distance involved and/or the shielding around a generator decouples it. As the distance C from the source becomes larger, the term (C+D)/C approaches 1 and the log approaches 0. Consideration of this effect is useful in the laboratory since the distances involved are usually short and little shielding is there.

For closed loops that do not contact the grounding cable, the following formula applies (return current ignored):

Refer to Fig. 3 on page C5.

V 5.292 x 10^{-5} x *L* x I x Log [(A+B)/r] -

5.292 x 10^{-5} x *L* x I x Log[(A/r)]

where *L* = length in feet
I = amperes
B = dimension in feet as shown
A = distance between loops in feet
r = GMR of ground cable in feet
Log = common logarithm (base 10)

Rewriting the equation

V 5.292 x 10^{-5} x *L* x I x Log [(A+B) - Log(r)] -

5.292 x 10^{-5} x *L* x I x [Log(A) - Log(r)]

The Log (r) portions cancels out and the result is:

V = 5.292 x 10^{-5} x *L* x I x Log (A+B) -

5.292 x 10 -5 x *L* x I x Log(A)

or $5.292 \times 10^{-5} \times L \times I \times \text{Log}[(A+B)/A]$

Again, we can usually assume the effect of the source is nil because of the distance involved or shielding around the generator; however, it can be calculated in the same manner as before. Using the same ground cable and current and 5 feet and 2.5 feet separation the voltage is

$$V = 5.292 \times 20 \times 10{,}000 \times [\text{Log } 5 - \text{Log } (2.5) / 100{,}000$$

$$= 5.292 \times 20 \times 10{,}000 \times (0.699 - 0.398) / 100{,}000$$

$$= 3.19 \text{ volts}$$

This is the total, since there is no IR to add in i.e., there is no resistive voltage of the ground cable present in the isolated loop with the worker,

7.3. Three Phase Applications of loop theory.

Consider the following example:

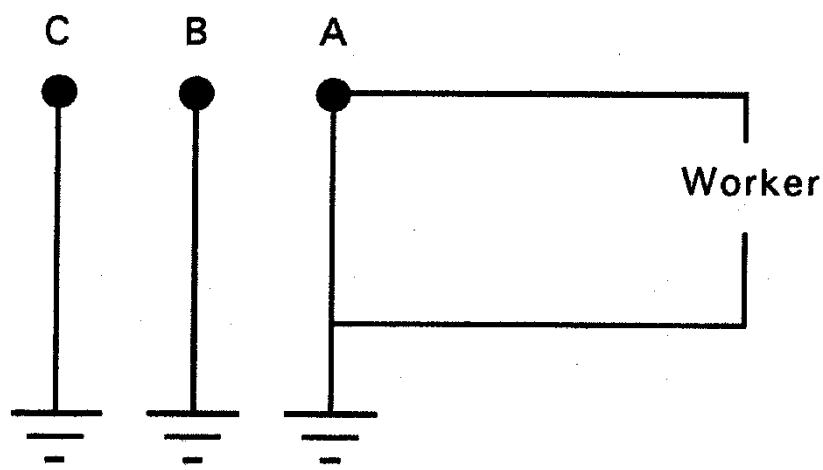

Figure 4

For a three phase balanced fault, the worker is exposed to inductive contributions from currents in phases A, B, and C. The A phase current will induce the highest voltage in the with the worker because it is nearest and the worker is bonded to the phase. The B phase contribution would be less and lag the induced A voltage by 240 degrees. The C phase would be least and lag by 120 degrees. The total of these induced voltages depend on the cable spacing and the distance the worker is from the personal protective grounds. In all cases the result is a decrease over just considering the A phase contribution. Because of the places where ground cables must be placed (in and around metal cubicles) in powerplants, the beneficial effects may be canceled out (decoupled) therefore this method can not be used to calculate a voltage reduction. It is good operating practice to take advantage of this reduction by placing the grounds close together. Maximum benefits occur in free space and when the worker is far away in relation to the conductor spacing. **This is not to be interpreted as staying far away from the personal protective grounds.**

The voltage reduction can be seen by using phasor diagrams.

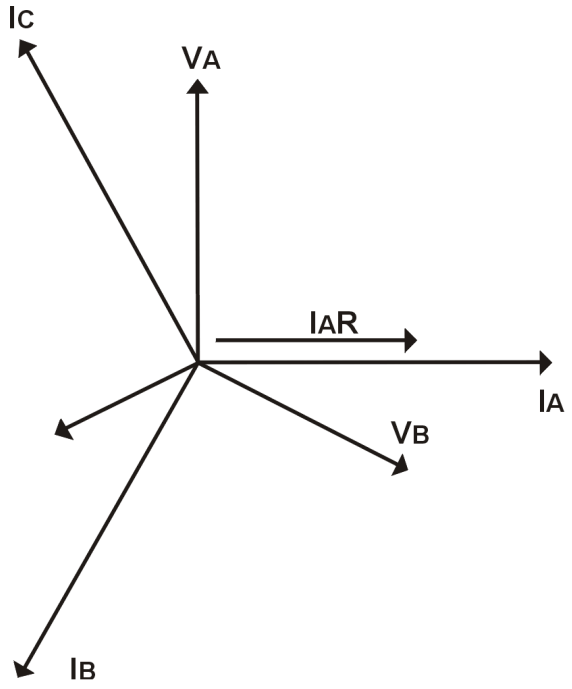

Figure 5

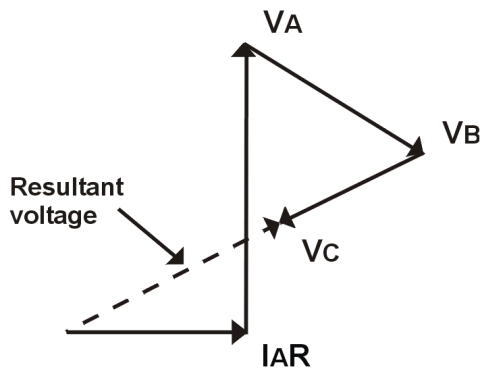

Figure 6

Use of Two or More Grounds

Two or more grounds may be needed to meet the current rating or lower the voltage levels. The current rating factor is 1.8 as previous mentioned. To calculate the effects of two grounds consider the following:

Assume same 4/0 cable
10,000 amperes evenly divided
grounds 0.3 feet apart (this is a reasonable distance for large clamps)
5 feet to worker from one ground, 5.3 feet from the other

Each ground would induce to each other

V = 5.292 x 20 x 5000 x Log (0.3/0.01667)/100,000
= 6.64 volts

The close ground would induce on the worker half the voltage for 1 cable based on Log (5/0.1667) or 13.1 volts.

The far ground would induce on the worker a slightly higher voltage based on Log (5.3/0.01667) or 13.2 volts.

The IR drop on each cable would be half of that of one cable.

(R = 0.05 ohms/1000 ft at 20 EC

IR = 20 x 10,000 x 0.05/1000 = 10 volts

Summing the voltage around the near loop would then be IR (of one cable) + j(13.1 + 13.2 - 6.6).

The total would the be 11.98 rounded to 12 volts

Assuming various ground application points, one may assume that the effects of two cables would be to reduce the IR drop by half and the voltage induced in the worker would be lowered by the amount of the voltage induced in each ground cable. At first observation, it would appear that placing the grounds farther apart would accomplish even more lowering. But the assumption of even current division would not be valid, and other effects would come into play. The effects of a third cable would be to lower the IR to one third. The total voltage induced on the worker would remain about the same. The voltage induced by each cable on each other would be determined by 3333 amperes rather than 5000 or two thirds or 4.4 volts. Since each cable has induced voltages from two cables the result is 8.8 volts or 4/3 of the value for two cables. It can therefore be concluded that the third ground has little effect on lowering induced voltages from that of using two grounds.

Due to unlimited variations in worksite cable geometries and for safety considerations, the reduction on induced voltage at the worker due to parallel grounds should be neglected.

DIVISION MAINTENANCE PROCEDURE	Title: FIELD TESTING OF PORTABLE PROTECTIVE GROUND CABLES	(MF4M1) P68001-10
DATE: O2-11-87	Author: J.W. Connelly/G. M. Ihle	
SPDS: 03-12-82	Ckd By: D. L. Johnson	Page 1 of 7

INDEX KEY WORDS: Portable protective ground testing

REFERENCE DOCUMENTS: (ME4M1-O4)P68001-04

REVISION NOTE: This Procedure supersedes Division Maintenance Standard S68001-10 dated 03-12-82. Repressing procedures used during the testing of aluminum portable protective ground cables are deleted. Maximum acceptable millivolt drop limits for 2/0 copper portable protective ground cables are presented.

I. BACKGROUND

Experience has shown that portable protective grounds can be damaged by rough usage and/or corrosion. The damage usually occurs close to the pressed ferrule and the insulation seldom shows outward signs of damage. Millivolt drop test procedures can be used to detect damage within the cable.

New 2/0 copper portable protective ground cables were purchased in late1986 to replace all 4/0 aluminum portable protective ground cables. This replacement will occur over a one year period. At this date, the 2/0 aluminum cables used by Transmission Maintenance are not scheduled for replacement with copper cable.

Before being issued to field crews, the new 2/0 copper cables will be tested using millivolt drop test procedures. These 2/0 copper cables will not require further testing in 19B7, but will require testing in 1987 and thereafter.

All aluminum portable protective ground cables still being used will require testing in lg87 and in the future. But, repressing procedures, used in the past, will not be allowed. Aluminum cables that do not test within acceptable limits can still be used, but they must be derated by 50%. Two derated aluminum cables must be installed in parallel in place of a single aluminum cable which tests within acceptable limits.

II. PROGRAM

A. In accordance with BPA Accident Prevention Manual Rule G-l, and Section I above, all portable protective ground cables shall be inspected and tested with the methods outlined in Section III.

B. Tests will be conducted annually on ail portable protective grounds that have been used. Cables that still have their ferrules tie-wrapped toqether (indicating .no use since last test) do not need to be tested,

C. It is the responsibility of each district supervisor or crew foreman to insure that the portable protective grounds used in their function are tested in accordance with this procedure,

D. All portable protective ground cables which ultimately prove to be defective shall be red-tagged and returned to Ross Utilization and Disposal Section (U&D) - EJPB.

E. Cables that pass the visual inspection and millivolt drop test shall be marked/tagged with colored tape in accordance with the following code:

19-B6+92;	Blue	19-B9+95;	Green
19-B7+93;	Gold (Yellow)	19-90+96;	Gray
19-B8+94;	Orange	19-91+97;	Red

F. Tie-wrap the two ends of a portable protective ground together following passing the mV drop test.

III. TESTING INSTRUCTIONS

A. Visual Instruction shall be made of all portable protective ground cables. If the following defects are evident, the portable protective grounds may be rejected without electrical testing. Red tag and send to U&D - EJPB (write on red tag reason for rejection).

1. Cracked or broken ferrules.
2. Broken springs.
3. Cut or badly mashed or flattened conductor.

B. Electrical tests shall be made of ail portable protective ground cables using millivolt drop test procedures.

1. Equipment required includes:

a. Standard BPA Millivolt Drop Test Set Code No. M-85923 rated I00A dc.

b. Digital multimeter Commonly available 3-1/2 or 4-1/2 digit meters from Fluke, Beckman, or Simpson are well suited for this measurement.

c. Two very thin voltage probes. Safety pins or similar thin sharp devices are preferred. An ice pick or sharpened screwdriver makes a large hole and may damage strands.

d. Measuring tape or marked device for measuring exactly one foot.

2. Millivolt test procedures. Refer to Figure 1.

a. Connect the current leads of the Millivolt Drop Test Set to the cable ferrules at A and B.

b. Insert thin voltage probes through the cable insulation and into the conductor strands at D and F exactly 1 Foot from the inner edge of the compression mark nearest the spring.

c Circulate 25 Amps through the cable.

d. Using the digital multimeter set on 200mV or 2.0V dc range, measure the millivolt drop from D to F (voltage probe to voltage probe) and compare to maximum acceptable values listed in Table 1 (Aluminum Ground Cables) or Table 2 (Copper Ground Cables).

TABLE 1

Maximum Acceptance mV Drop @ 20EC - ALUMINUM CABLES

Cable Overall Length in	D to F Feet In Feet	Maximum Acceptable mV D to F with 25 Amps	
		2/0 Aluminum	4/0 Aluminum
12	10	32	21
15	13	42	27
20	18	58	38
25	23	74	48
30	28	90	59
35	33	106	69
40	38	122	80
45	43	138	90
50	46	154	101
60	58	186	122
65	63	202	132
75	73	234	153
80	78	250	164
90	88	282	185
100	98	314	206

Maximum acceptable mV for ferrule and 1 foot of 2/0 aluminum cable (measurement C to D and E to F) is 4.5 mV (range of 3.7 to 4.5 mV can be expected).

Maximum acceptable mV for ferrule and 1 foot of 4/0 aluminum cable (measurement C to D and E to F) is 3.0 mV (range of 2.5 to 3.0 mV can be expected),

TABLE 2

Maximum Acceptable mV Drop @ 20EC - COPPER CABLES

Cable overall in Feet	D to F in Feet	Maximum Acceptable mV* D to F with 25 Amps
		2/0 Copper
4	1.25	2.B
6	3.25	7.2
10	7.25	16.0
12	9.25	20.4
15	12.25	27.1
20	17.25	38. 1
25	22.25	49.2
30	27 25	60.2
35	32.25	71.3
40	37.25	82.3
45	42.25	93.4
50	47.25	104.4
60	57.25	126.5
65	62.75	137.6
70	67.25	146.6
75	72.25	159.7
100	97.25	214.9

Maximum acceptable mV for ferrule and 1 foot of 2/0 copper cable (measurement E to F) is 2.4 mV (range of 1.9 to 2.4 mV can be expected).

e. If a cable is kinked, that section will be tested more thoroughly by inserting a probe on either side of the kink and measuring the drop across this section. The acceptable mV drop will be 3.2mV per foot of 2/0 aluminum cable, 2.1mV for 4/0 aluminum, or 2.1mV per foot for 2/0 copper cable times the length of cable between the probes.

f. Measure the mV drop from C to D and E to F to check the connection through the ferrules. To obtain accurate readings, the potential leads must not touch the current lead connection. If the mV drop is greater than the acceptable limits listed above, the cable must be rejected and red tagged.

*Maximum allowed mV for copper cables is based on 106% of the nominal resistance listed in Table 5.7-1 ICES S-19-81/NEMA WC-3 Rev. 1984. The 6% allowance is an accumulation of ± 2% instrument error, 2% from Table 5.7-1 footnote, and ± 2% allowance for cable temperature and length variations. Fusing current tests have shown that cables measuring within this maximum will provide 115% of rated ampacity.

Frederick M. Johnson, Director
Division of Maintenance

(WP-0HS-0B32d)

Figure 1

A practical method for testing portable grounding cables.

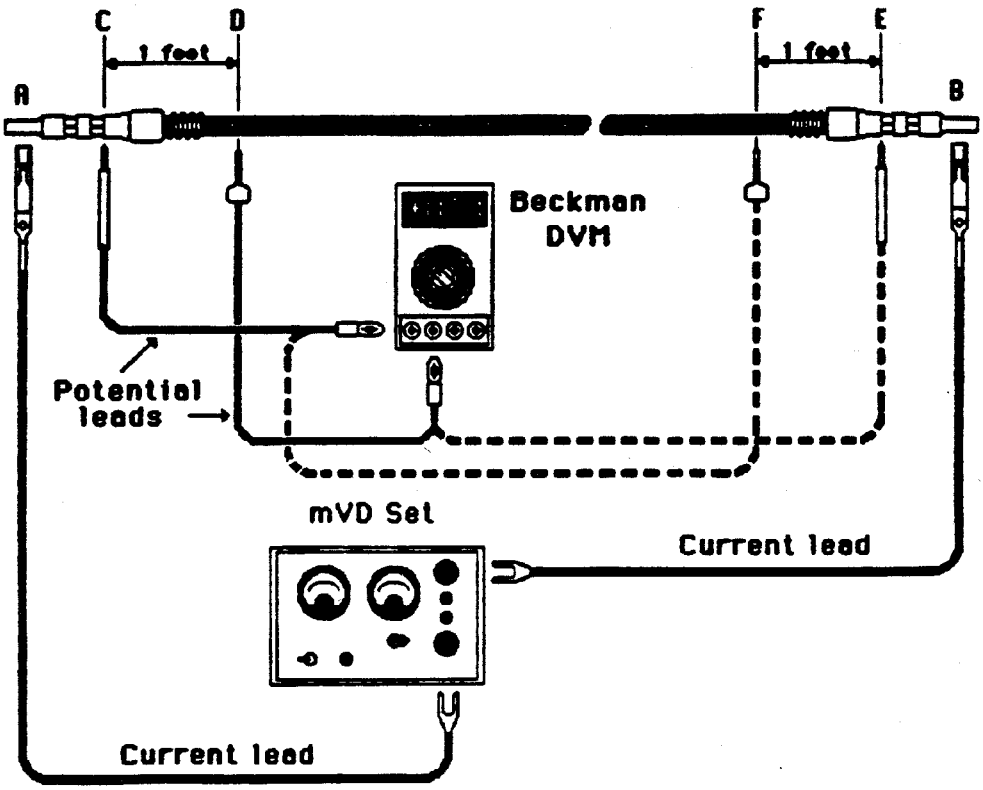

Appendix E

GROUND CABLE TESTING - HOOVER POWERPLANT

1. Background - Staged fault testing was performed at Hoover Powerplant to measure voltage on a worker under conditions normally found in a large powerplant.

A 100-MVA (original winding rating) unit at a reduced voltage of 75%, to limit stresses on the equipment, was closed into personal protective grounds in different configurations. The testing conditions resulted in large X/R ratios, dc offsets, and forces associated with the three phase conditions. Manufacturers test their grounding equipment under single phase conditions to satisfy ASTM specifications of a maximum of 20% asymmetry or an X/R ratio of 1.8.

2. Testing - Testing was limited to the following tests:

A - Three phase unrestrained - 3 grounds
B - Three phase restrained - 3 grounds
C - Three phase restrained - 2 jumpers, 1 ground
D - Three phase restrained - 3 grounds, bundled
E - Single phase restrained - 1 ground

See the figures on the following pages for the test configurations for tests A, B, C, and E.

3. Test Results -

Test	Current	Va ground cable	Bus to enclosure	Bus to plant ground
A	Testing resulted in phase a clamp coming off			
B	11,500 A	2.5 V	22 V	22 V
C	11,500 A	< 2 V	< 2 V	< 2 V
D	Testing resulted in restraining ties breaking loose and phase a clamp coming off. Measurements were unreliable under these conditions, but were slightly higher than in test C.			
E	14,140 A (1.8 V ground mat rise)	14 V	35.4 V	44.2 V

Notes: The current and voltages had large offsets and decayed considerably, for instance, the current readings for test B tapered from 11,500 A to 8,600 A in 5 cycles. The readings represent values read at about the same time.

To perform the single phase to ground test, the unit grounding transformer was bypassed on the high voltage side.

Clamps used for these tests may have not have been appropriate for the conditions and other types have been recommended.

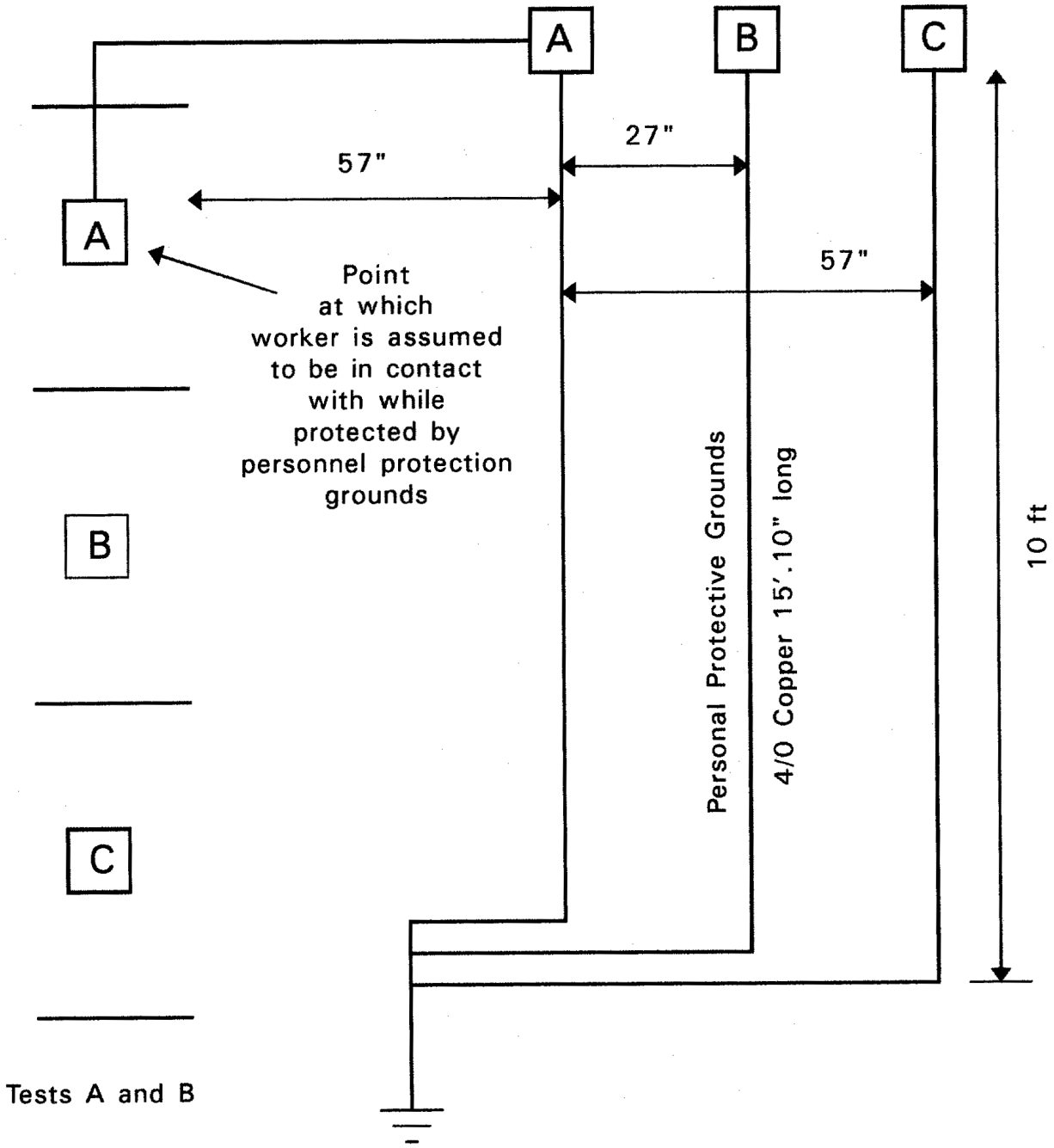
A
B
C
27"
57"
A
57"
Point
at which
worker is assumed
to be in contact
with while
protected by
personnel protection
grounds
B
Personal Protective Grounds
4/0 Copper 15'.10" long
10 ft
C
Tests A and B

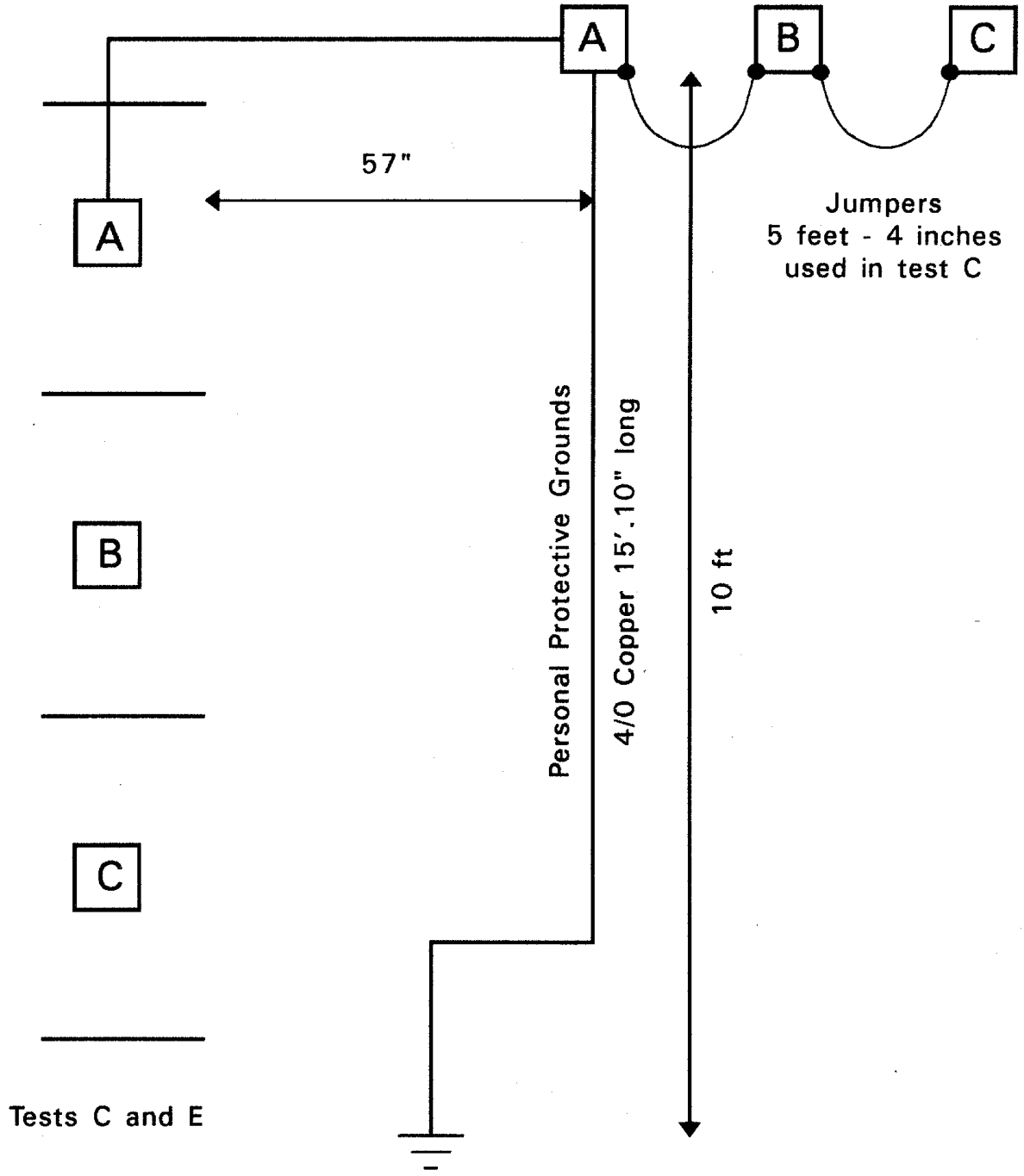

Printed on Recycled Paper

☆U.S. GOVERNMENT PRINTING OFFICE: 1993—838-379