DRAWING 16

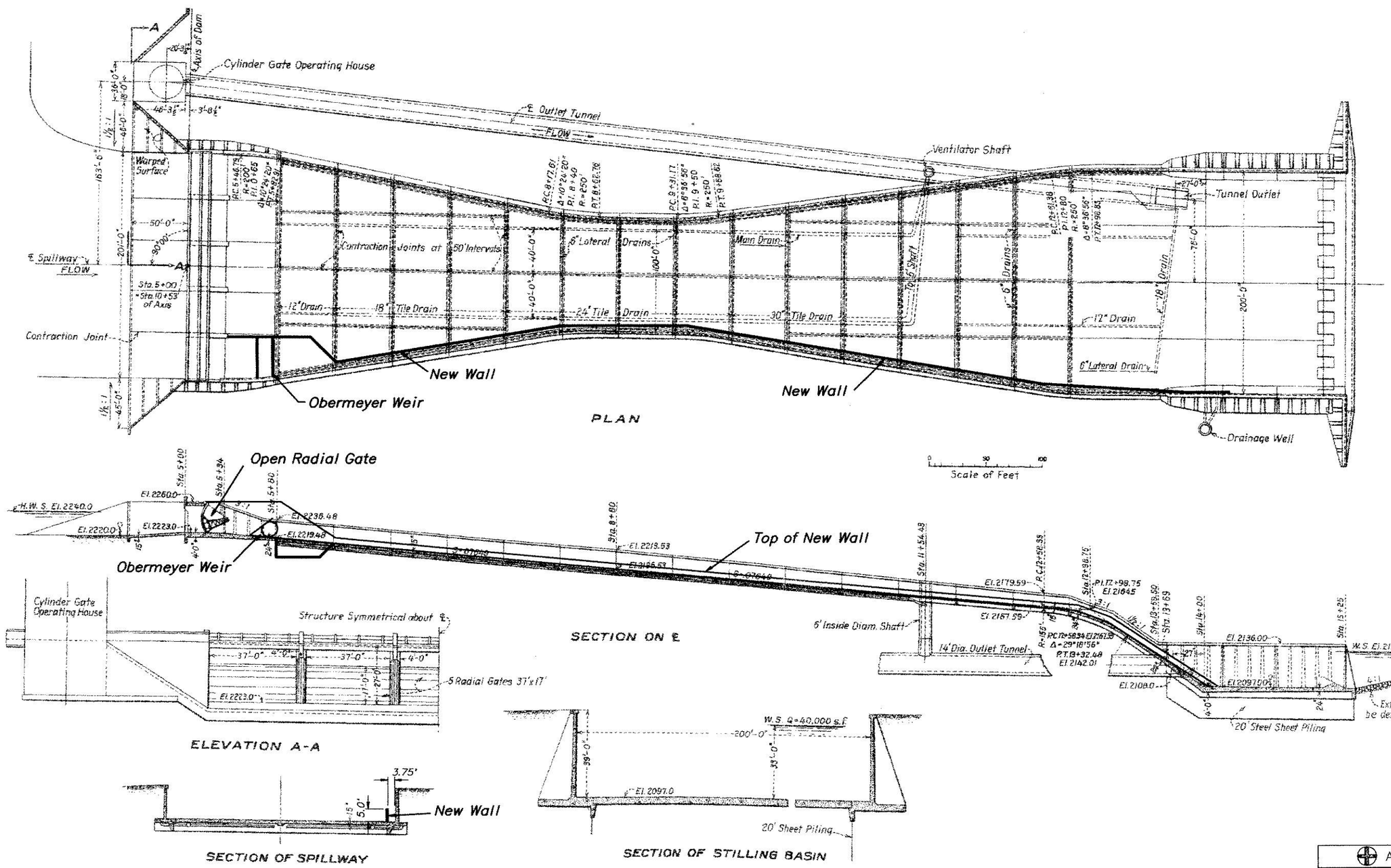

ALWAYS THINK SAFETY

UNITED STATES
DEPARTMENT OF THE INTERIOR
BUREAU OF RECLAMATION
YAKIMA PROJECT – WASHINGTON

CLE ELUM DAM

DOWNSTREAM PASSAGE

MODIFY SPILLWAY WITH NEW GATE

CADD SYSTEM	CADD FILENAME	
AutoCAD Rel. 15.06 BOISE, IDAHO	DRAWING14.DWG NOV 2002	DRAWING 16

Specification #

DRAWING 17

DRAWING 17

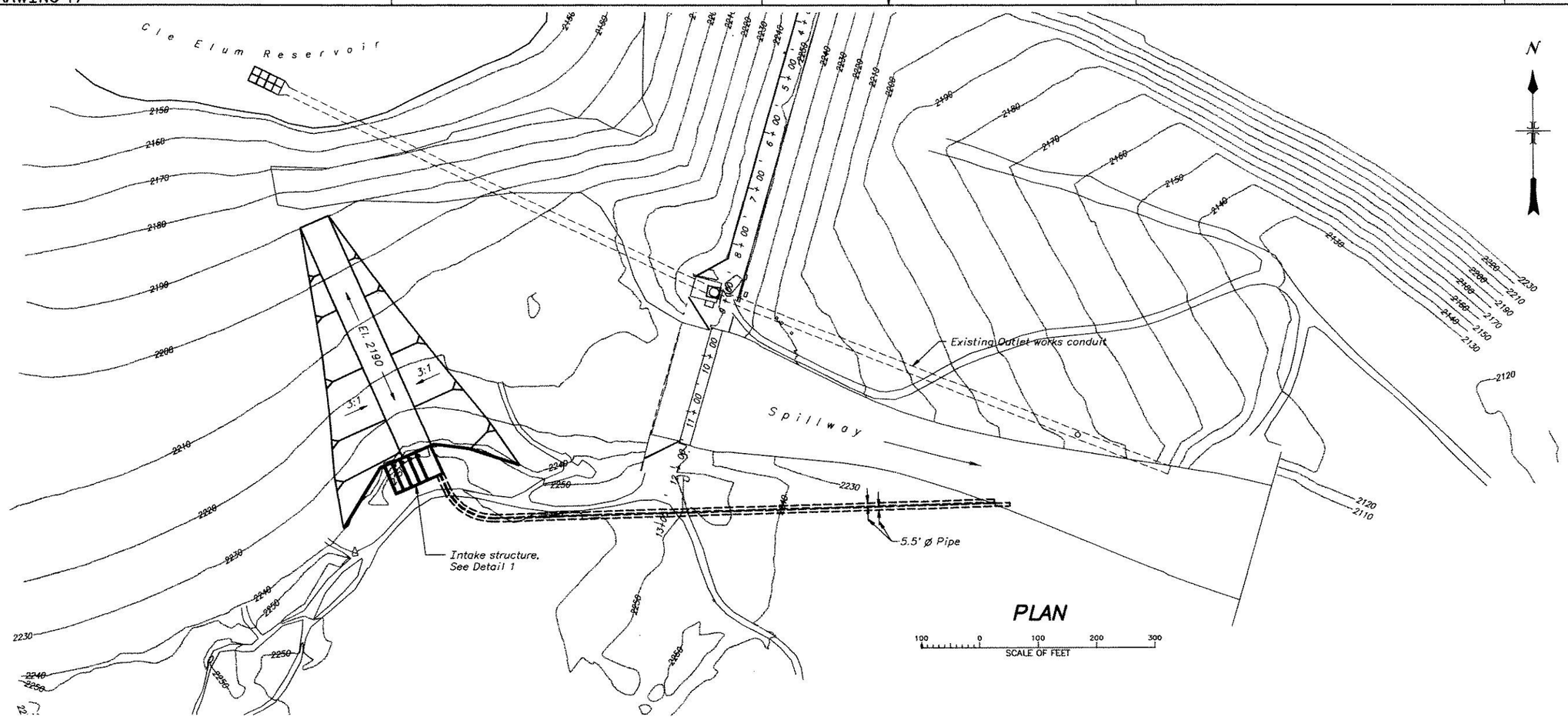

PLAN

100 0 100 200 300
SCALE OF FEET

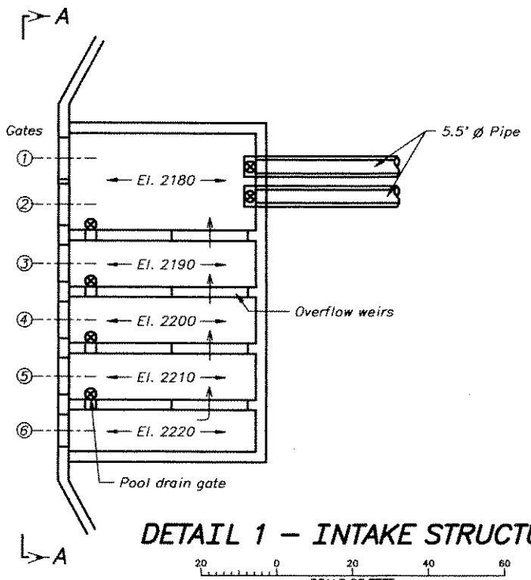

DETAIL 1 – INTAKE STRUCTURE

20 0 20 40 60
SCALE OF FEET

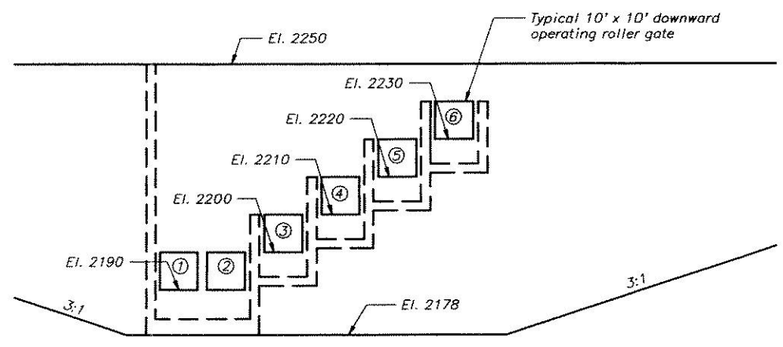

SECTION A–A

20 0 20 40 60
SCALE OF FEET

ALWAYS THINK SAFETY

UNITED STATES
DEPARTMENT OF THE INTERIOR
BUREAU OF RECLAMATION
YAKIMA PROJECT – WASHINGTON

CLE ELUM DAM

DOWNSTREAM PASSAGE

NEW SPILLWAY

CADD SYSTEM AutoCAD Rel. 15.06 BOISE, IDAHO	JULY 29, 2002	CADD FILENAME Drawing17.dwg DRAWING 17

Specification #

DRAWING 18

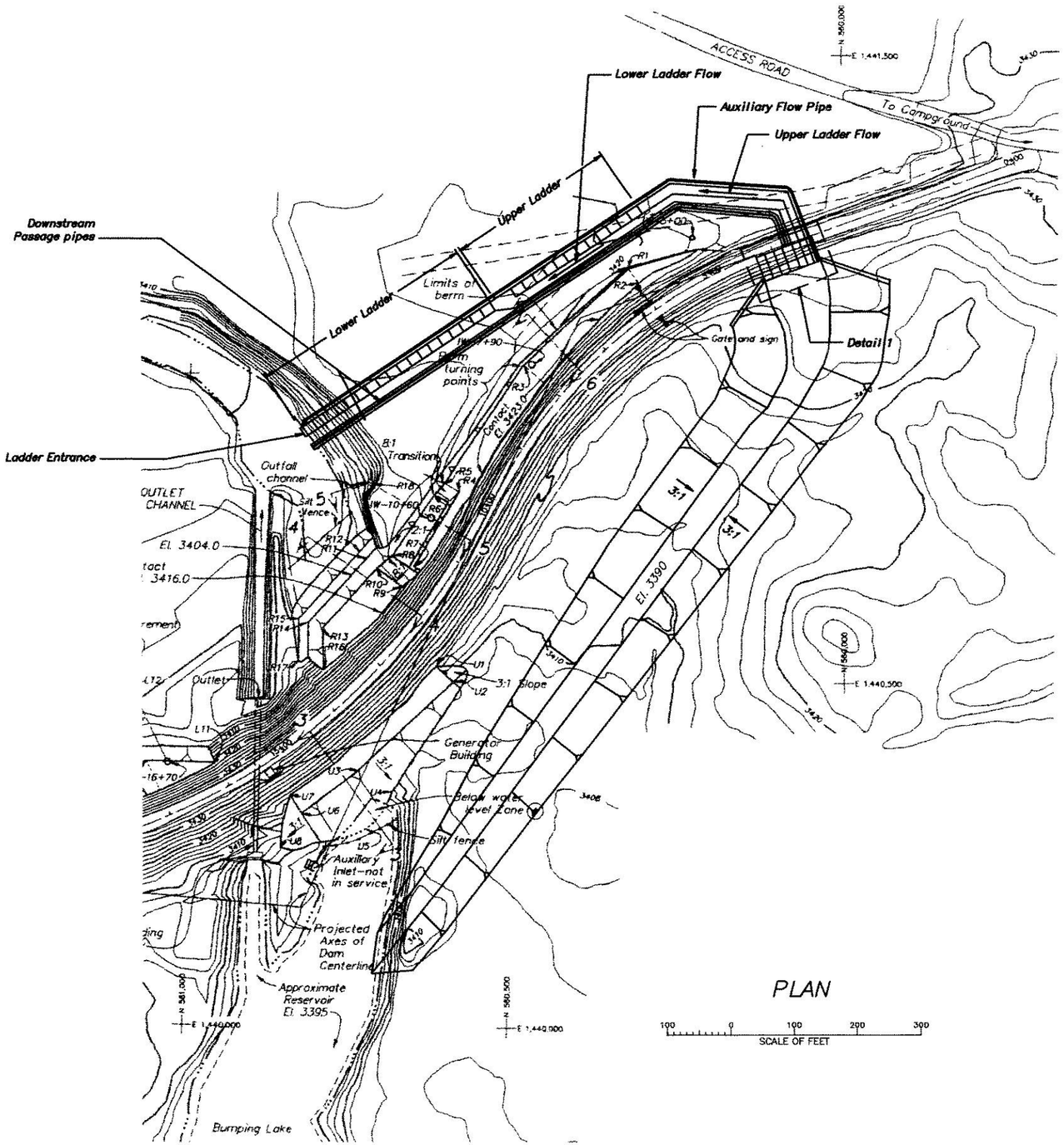

PLAN

100 0 100 200 300
SCALE OF FEET

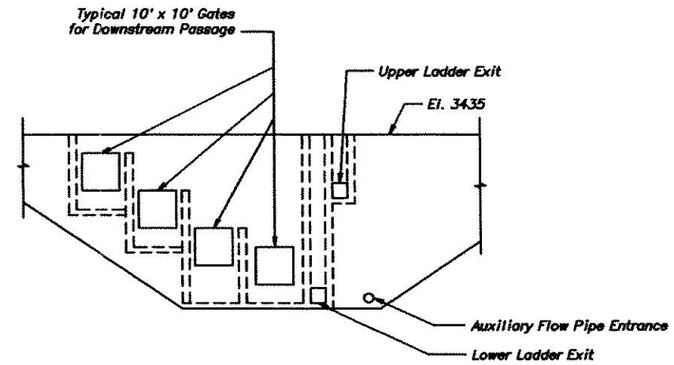

SECTION A–A

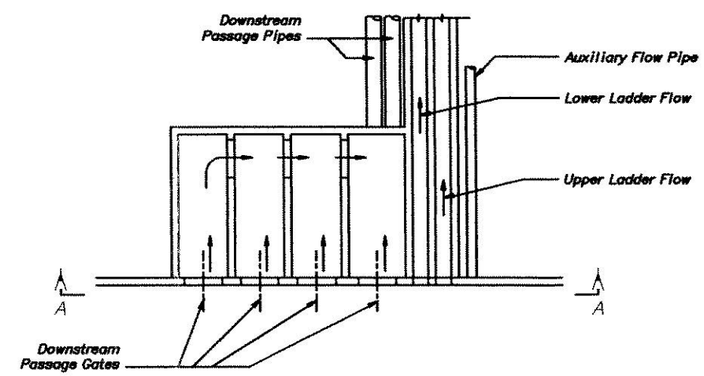

DETAIL 1
PLAN

ALWAYS THINK SAFETY

UNITED STATES
DEPARTMENT OF THE INTERIOR
BUREAU OF RECLAMATION
YAKIMA PROJECT – WASHINGTON

BUMPING LAKE DAM

UPSTREAM AND DOWNSTREAM PASSAGE
FISH LADDER AND NEW SPILLWAY

CADD SYSTEM AutoCAD Rel. 15.06 BOISE, IDAHO	CADD FILENAME Drawing18.dwg SEPTEMBER 3, 2002
Specification #	DRAWING 18

DRAWING 19

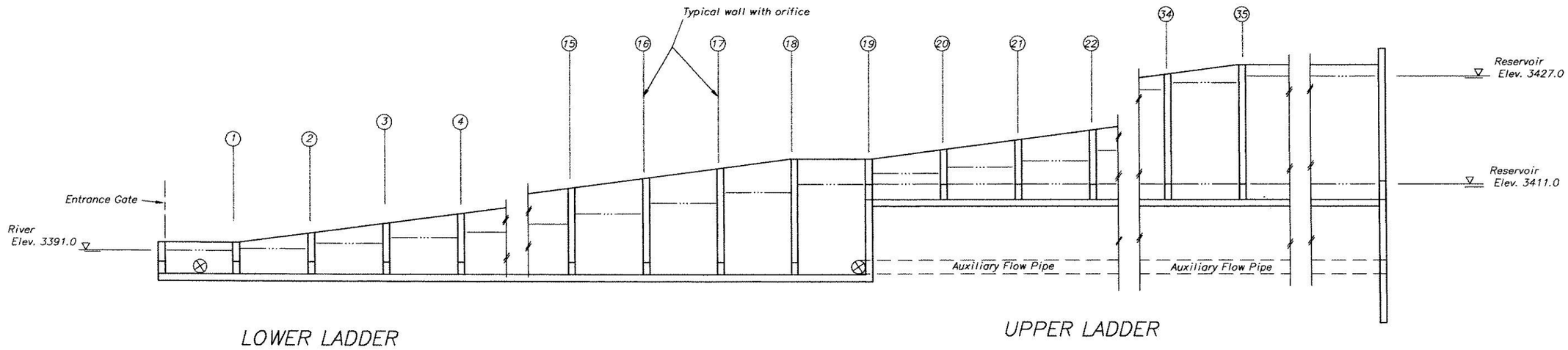

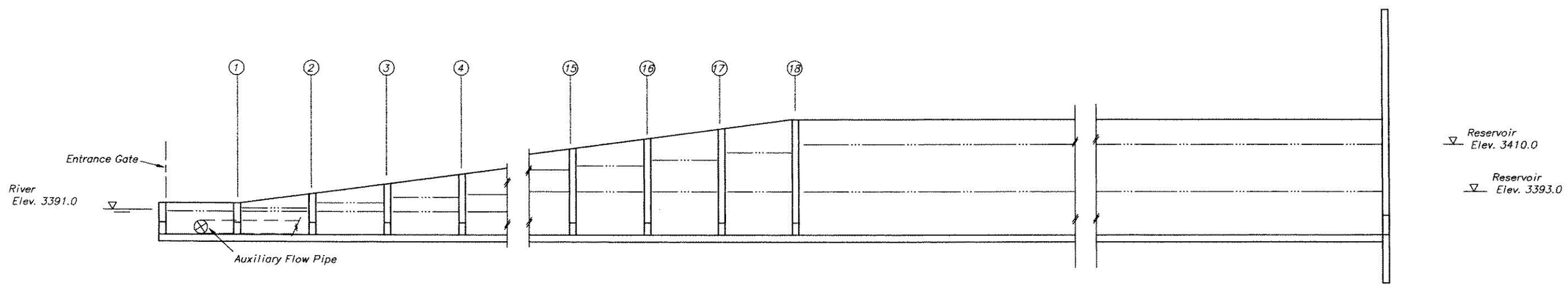

ALWAYS THINK SAFETY

UNITED STATES
DEPARTMENT OF THE INTERIOR
BUREAU OF RECLAMATION
WASHINGTON

BUMPING LAKE DAM
UPSTREAM PASSAGE
FISH LADDER PROFILES

CADD SYSTEM AutoCAD Rel. 15.06 BOISE, IDAHO	CADD FILENAME Drawing17.dwg NOV. 2002

DRAWING 19

DRAWING 20

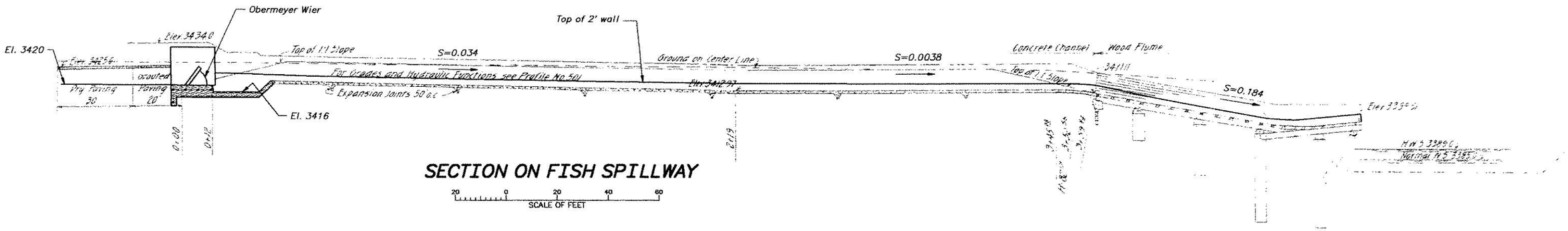

SECTION ON FISH SPILLWAY

SCALE OF FEET

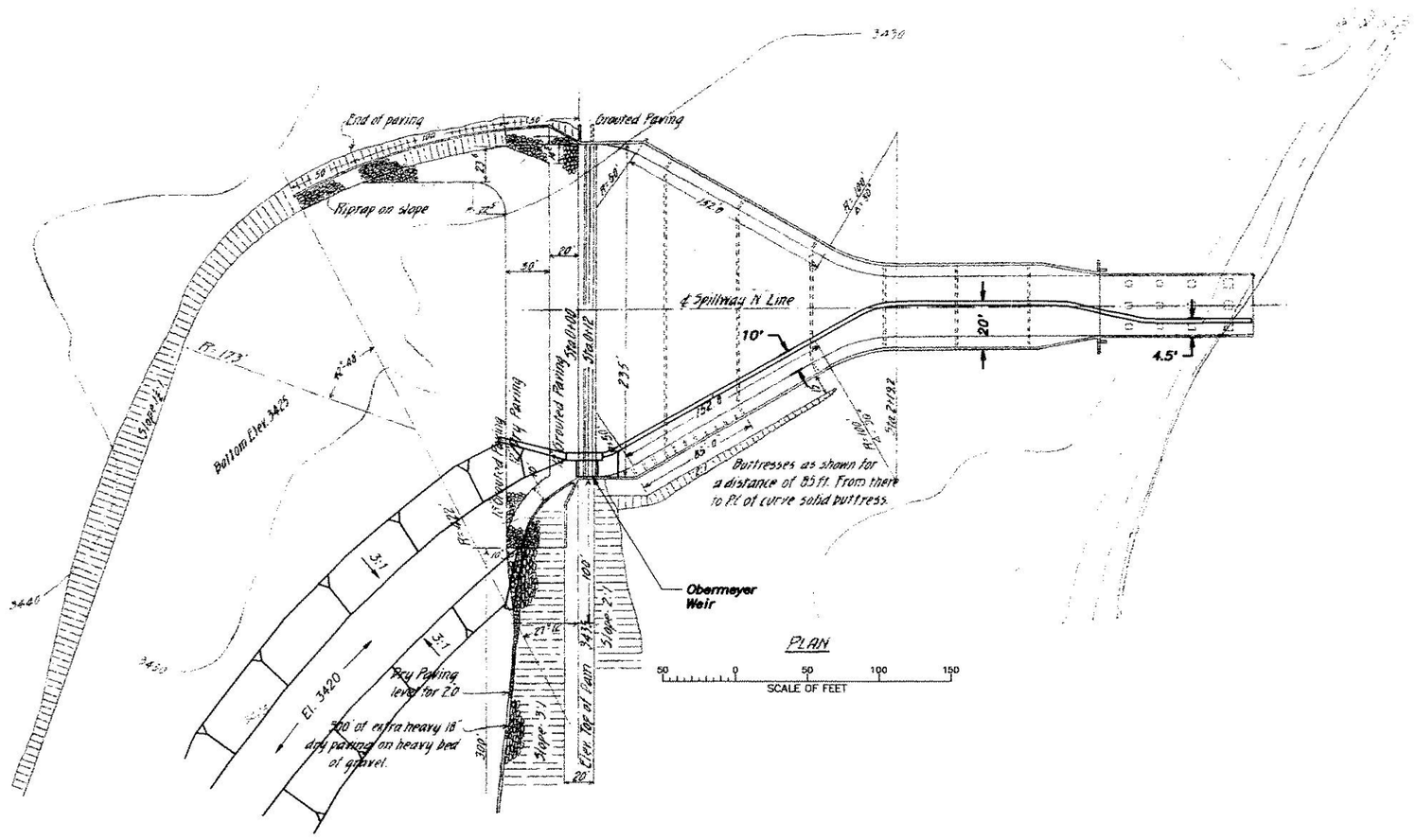

PLAN

SCALE OF FEET

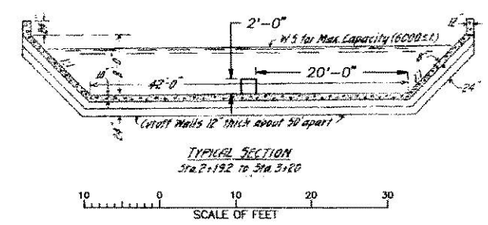

TYPICAL SECTION
Sta. 2+192 to Sta. 3+20

SCALE OF FEET

ALWAYS THINK SAFETY

UNITED STATES
DEPARTMENT OF THE INTERIOR
BUREAU OF RECLAMATION
YAKIMA PROJECT – WASHINGTON

BUMPING LAKE DAM

DOWNSTREAM PASSAGE
NEW GATE ON SPILLWAY
PLAN AND SECTIONS

CADD SYSTEM AutoCAD Rel. 15.06 BOISE, IDAHO	NOVEMBER 13, 2002	CADD FILENAME Drawing20.dwg DRAWING 20

Specification #