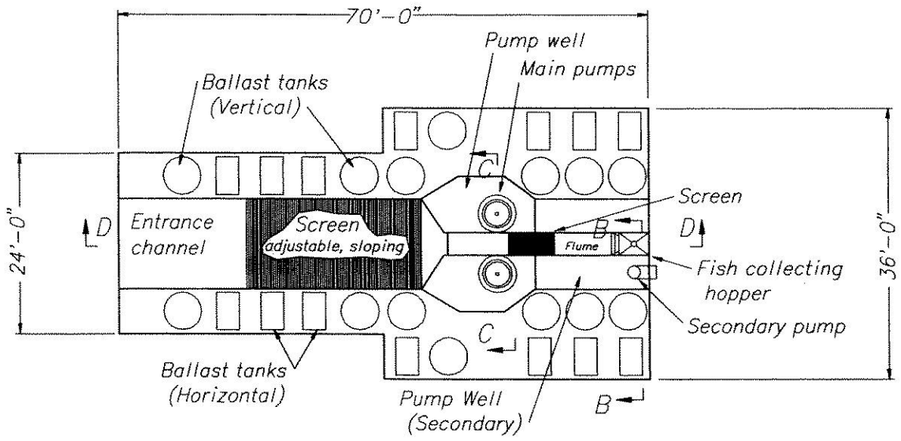

DETAIL 1 – Fish Collection Barge PLAN

BELOW DECK LEVEL

SCALE OF FEET

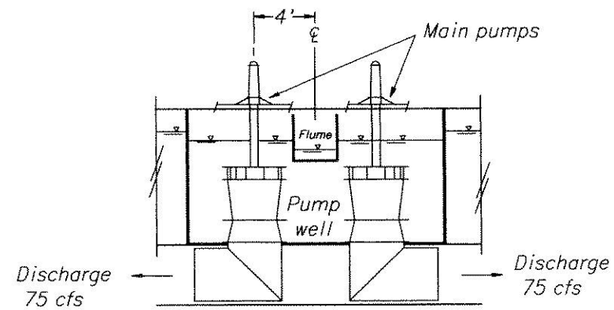

SECTION C – C

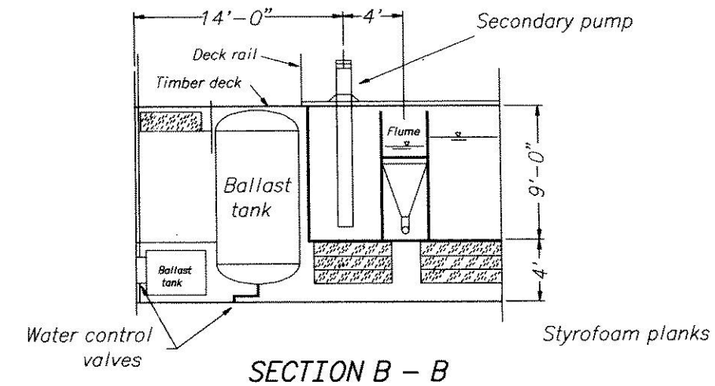

SECTION B – B

SCALE OF FEET

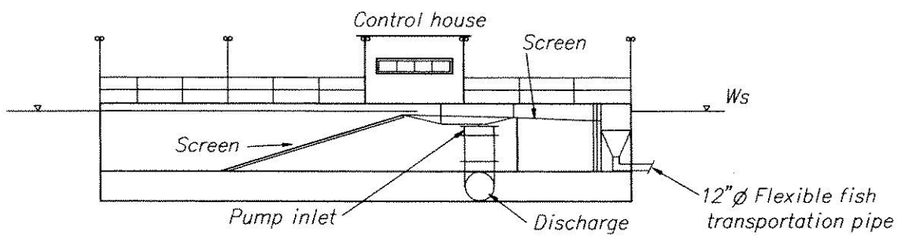

SECTION D – D

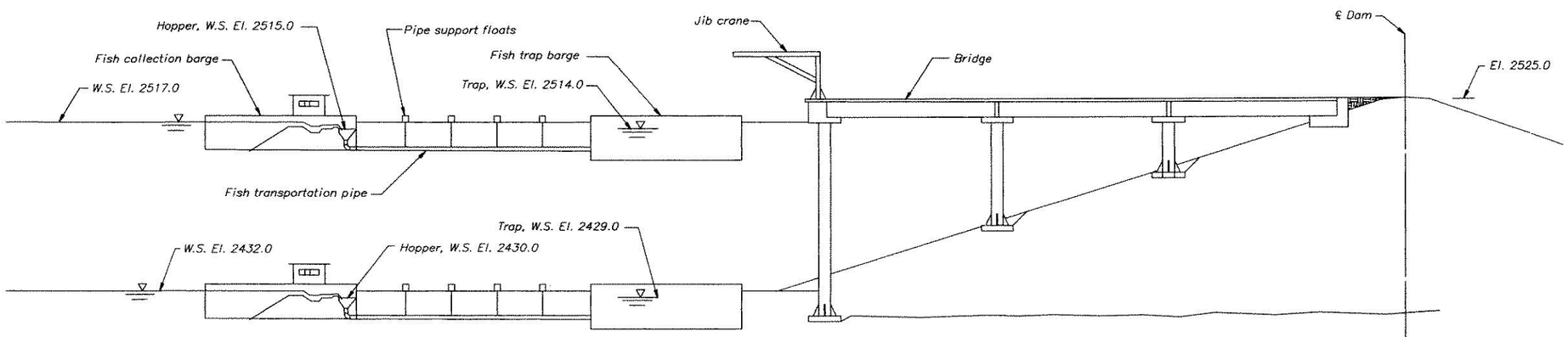

SECTION A–A

(Drawing 8)

SCALE OF FEET

ALWAYS THINK SAFETY

UNITED STATES
DEPARTMENT OF THE INTERIOR
BUREAU OF RECLAMATION

YAKIMA PROJECT – WASHINGTON

KEECHELUS DAM

DOWNSTREAM PASSAGE

FISH COLLECTION BARGE

CADD SYSTEM AutoCAD Rel. 15.06	CADD FILENAME DRAWING11.DWG	DATE AND TIME PLOTTED FEBRUARY 21, 2003 13:44
BOISE, IDAHO	NOVEMBER 2002	DRAWING 11

DRAWING 12

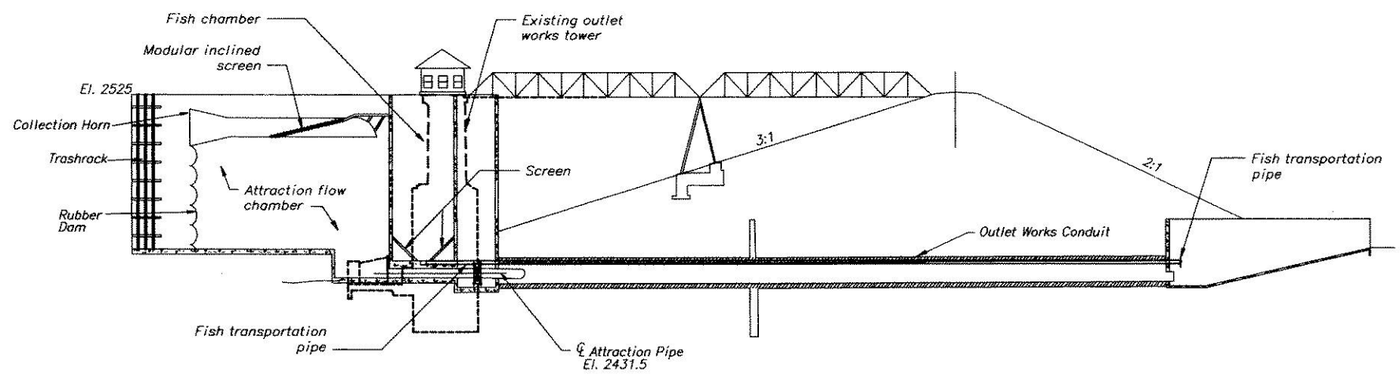

SECTION A–A

1 0 1 2 3 4 5 6 7 8
SCALE OF FEET

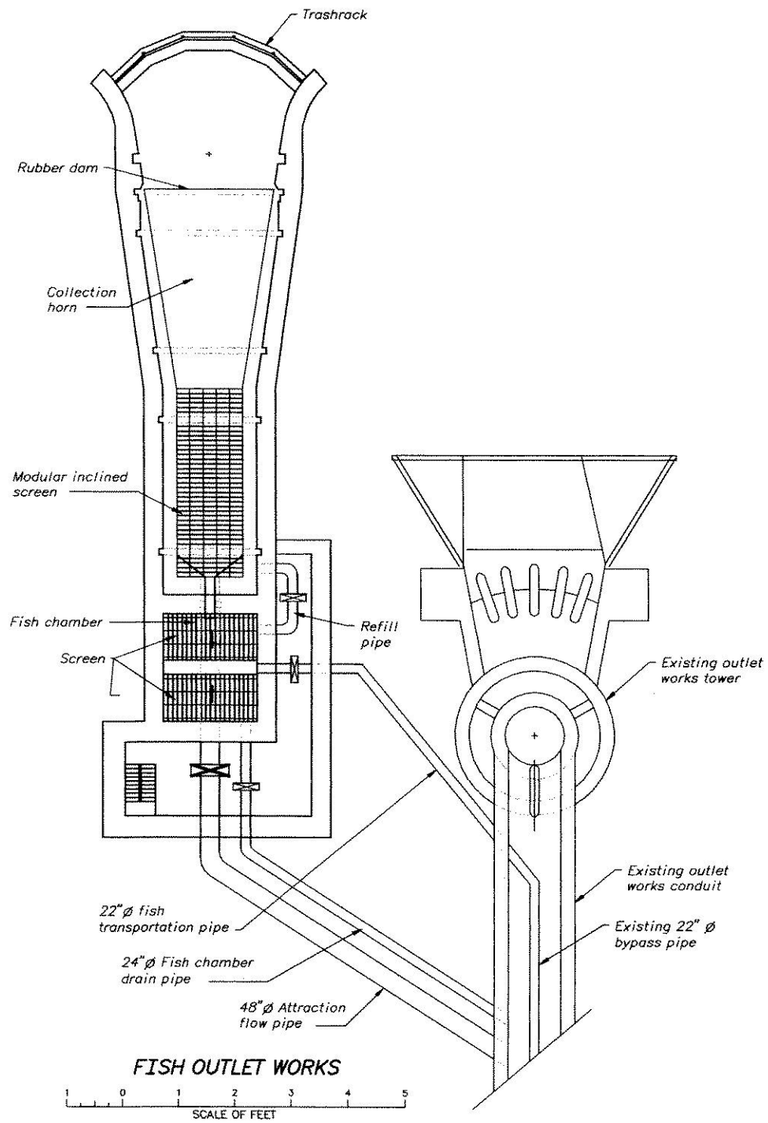

FISH OUTLET WORKS

1 0 1 2 3 4 5
SCALE OF FEET

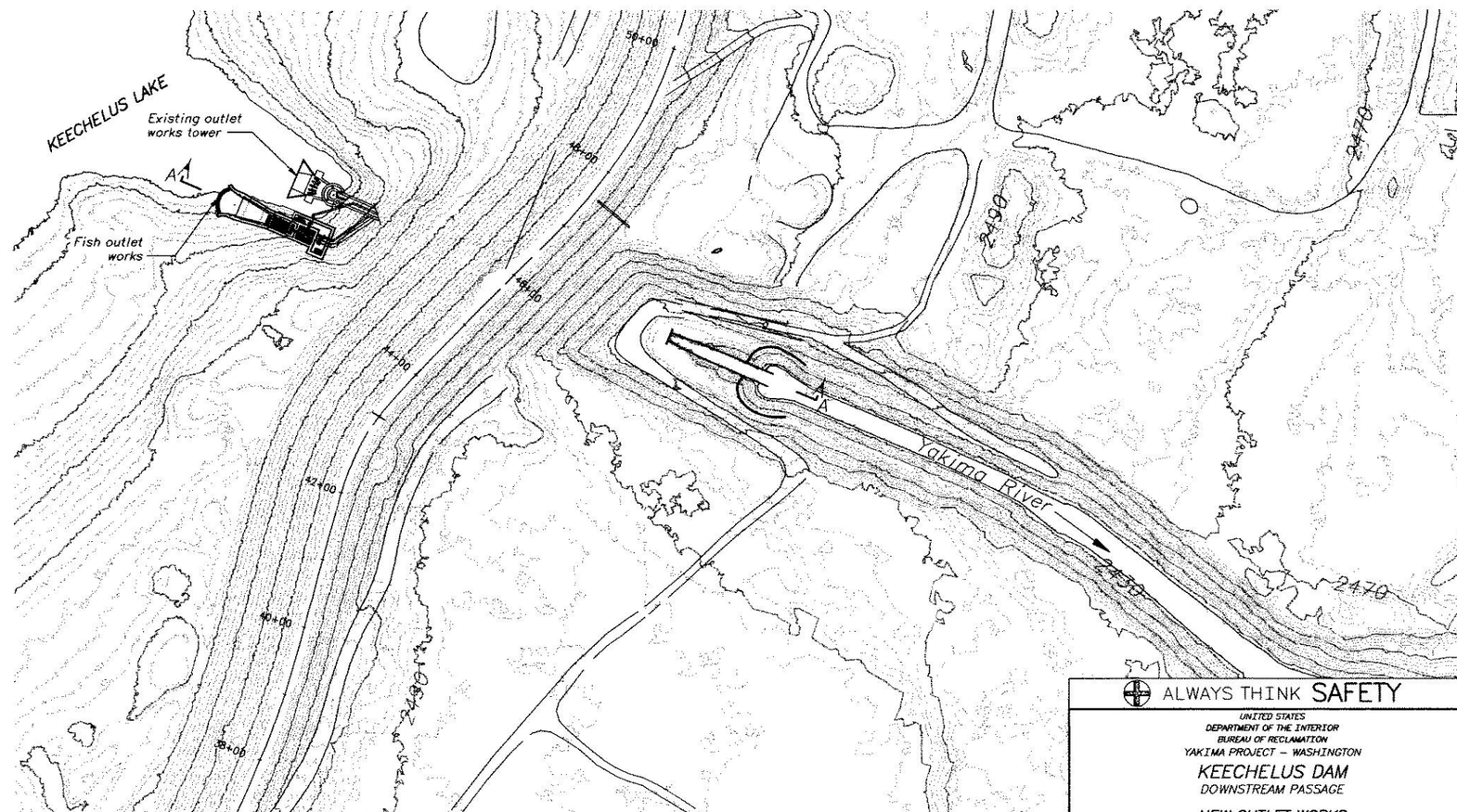

PLAN

100 0 100 200 300
SCALE OF FEET

ALWAYS THINK SAFETY

UNITED STATES
DEPARTMENT OF THE INTERIOR
BUREAU OF RECLAMATION
YAKIMA PROJECT – WASHINGTON

KEECHELUS DAM
DOWNSTREAM PASSAGE

NEW OUTLET WORKS

CADD SYSTEM	CADD FILENAME
AutoCAD Rel. 15.06	drawing12.dwg
BOISE, IDAHO	7-1-2002

DRAWING 12

Specification #

DRAWING 13

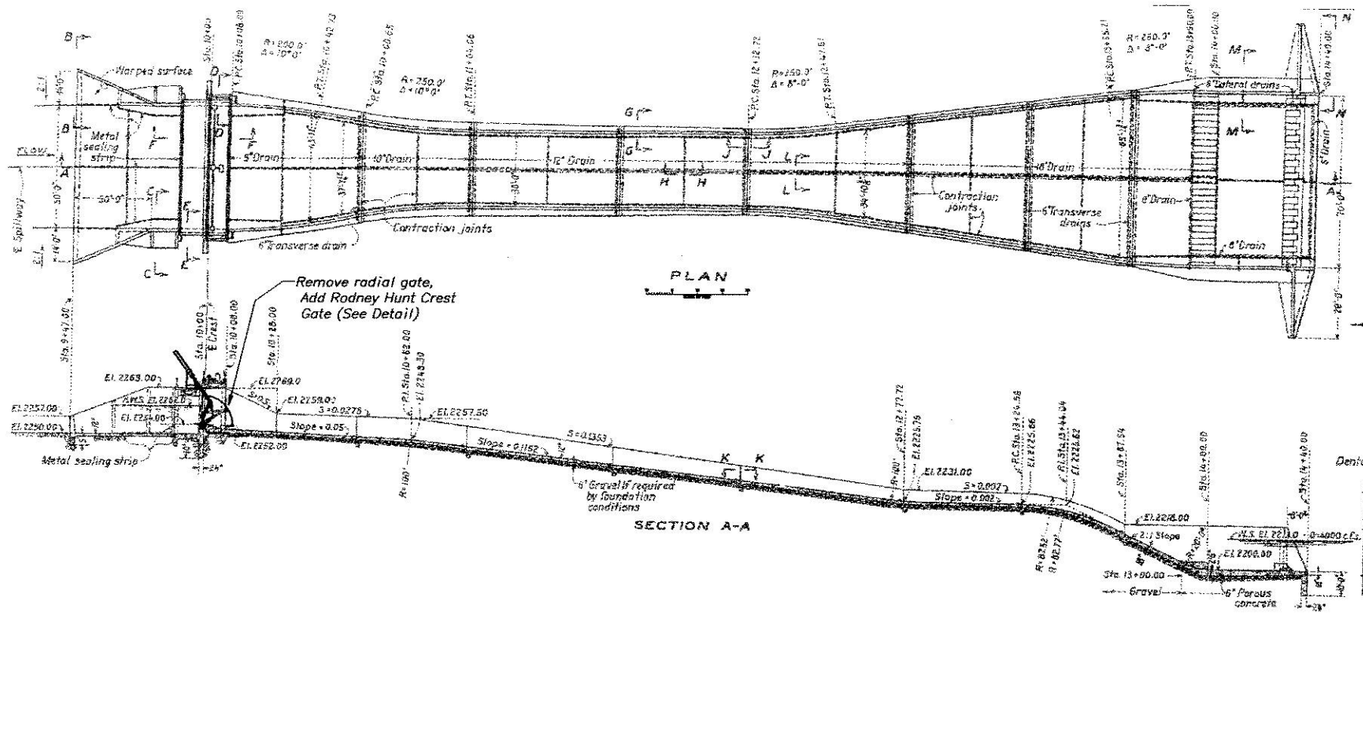

NOTES

All drains to be open joint sewer pipe and are to be laid in selected gravel except as otherwise shown.

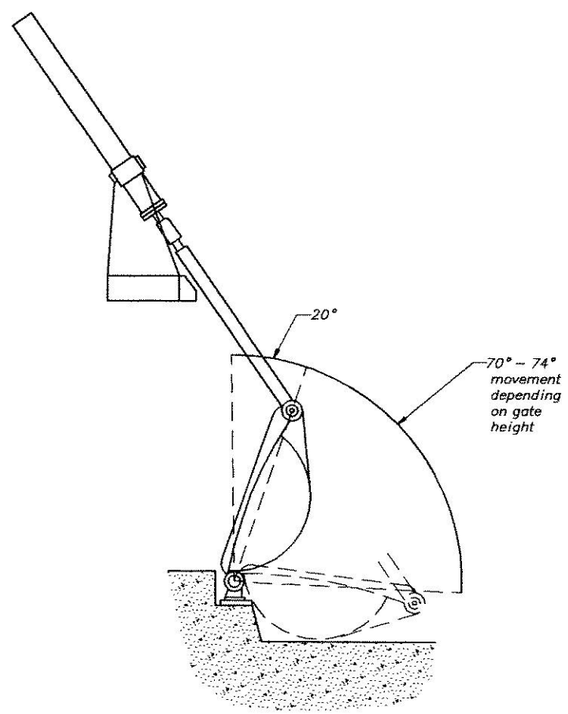

CREST GATE DETAIL

ALWAYS THINK SAFETY

UNITED STATES
DEPARTMENT OF THE INTERIOR
BUREAU OF RECLAMATION

YAKIMA PROJECT – WASHINGTON

KACHESS DAM

DOWNSTREAM PASSAGE

MODIFY SPILLWAY WITH NEW GATE

CADD SYSTEM AutoCAD Rel. 14.05	CADD FILENAME DRAWING 13.DWG	
BOISE, IDAHO	NOVEMBER 2002	DRAWING 13

SPECIFICATION #

DRAWING 14

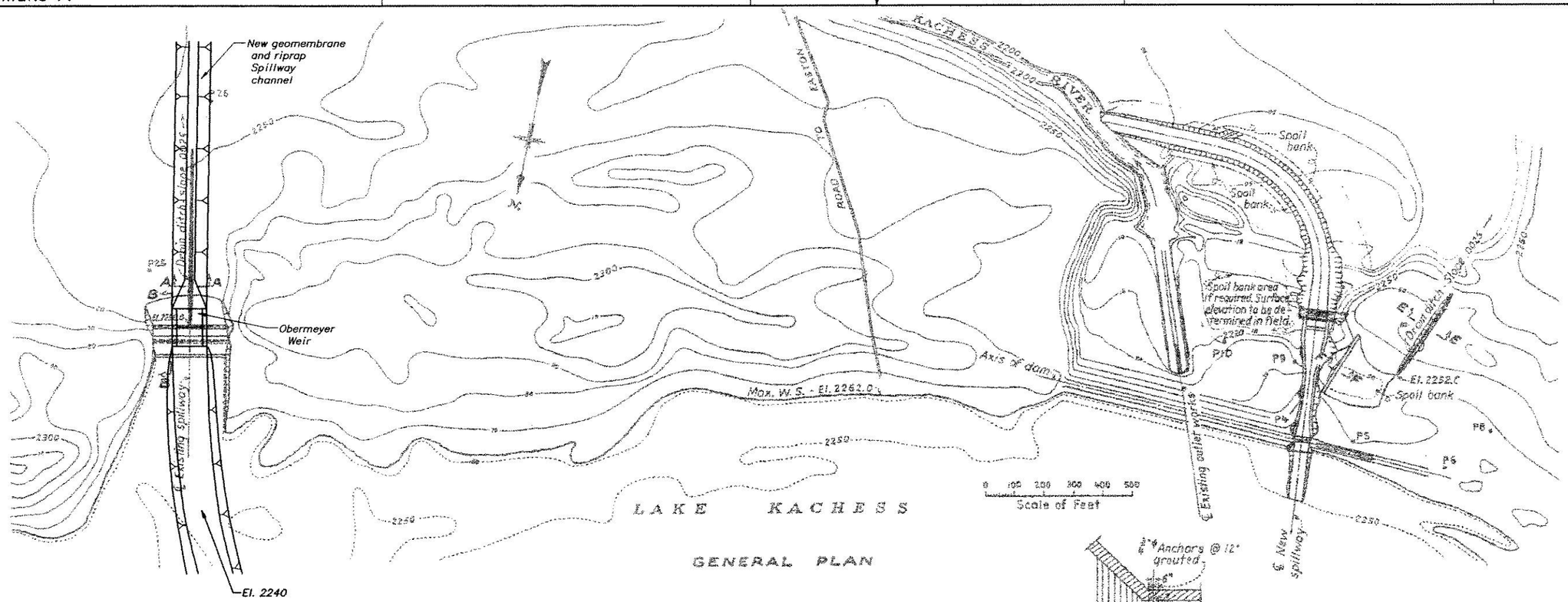

SECTION A-A

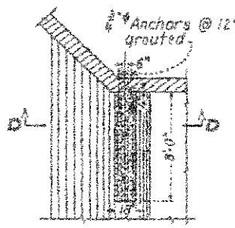

SECTION C-C

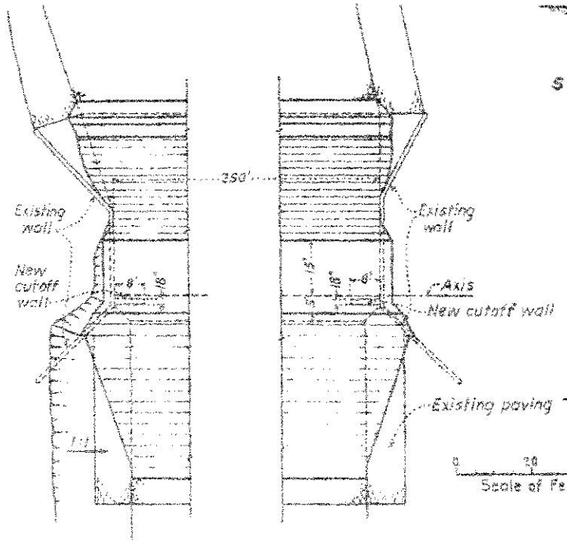

LEFT ABUTMENT RIGHT ABUTMENT
PLAN OF DIKE AT OLD SPILLWAY

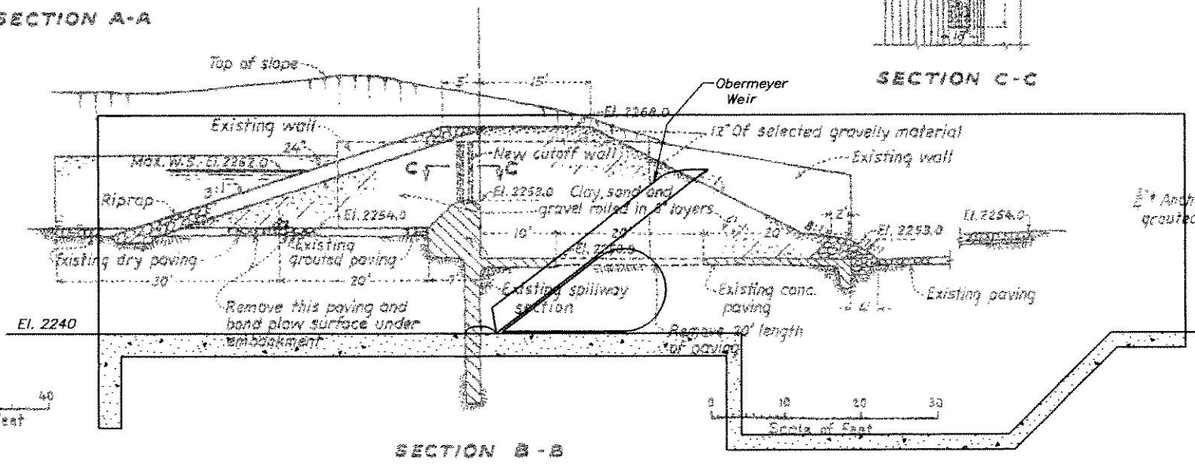

SECTION B-B

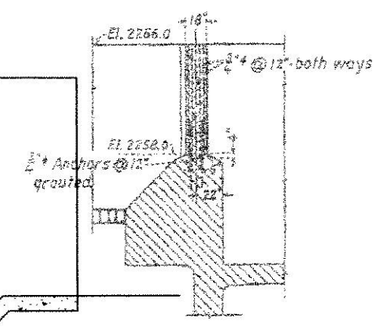

SECTION D-D

ALWAYS THINK SAFETY

UNITED STATES
DEPARTMENT OF THE INTERIOR
BUREAU OF RECLAMATION

YAKIMA PROJECT – WASHINGTON

KACHESS DAM

DOWNSTREAM PASSAGE

NEW SPILLWAY

CADD SYSTEM	CADD FILENAME	
AutoCAD Rel. 15.06	DRAWING 14.DWG	
BOISE, IDAHO	NOVEMBER 2002	DRAWING 14

DRAWING 15

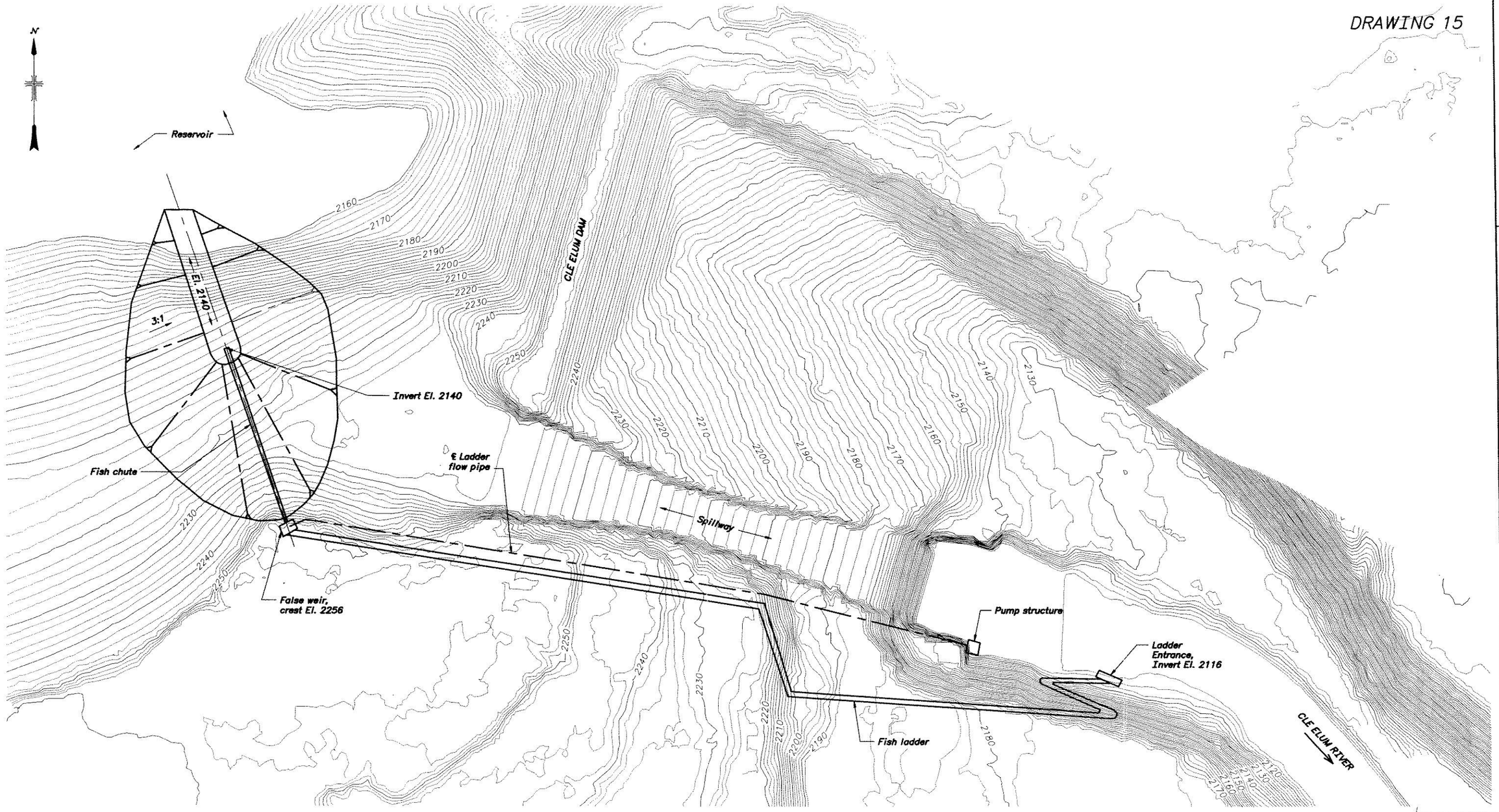

PLAN

100 0 100 200 300
SCALE OF FEET

ALWAYS THINK SAFETY

UNITED STATES
DEPARTMENT OF THE INTERIOR
BUREAU OF RECLAMATION
YAKIMA PROJECT -- WASHINGTON

CLE ELUM DAM
UPSTREAM PASSAGE
FISH LADDER WITH PUMPED FLOW

CADD SYSTEM	CADD FILENAME
AutoCAD Rel. 15.06	Drawing13.dwg
BOISE, IDAHO NOVEMBER 1, 2002	DRAWING 15

Specification #